United States
Environmental Protection
Agency

Office of Health and Ecological
Effects
Washington DC 20460

EPA-600/9-78-013
June 1978

Research and Development

EPA

Comprehensive Standards: The Power Generation Case

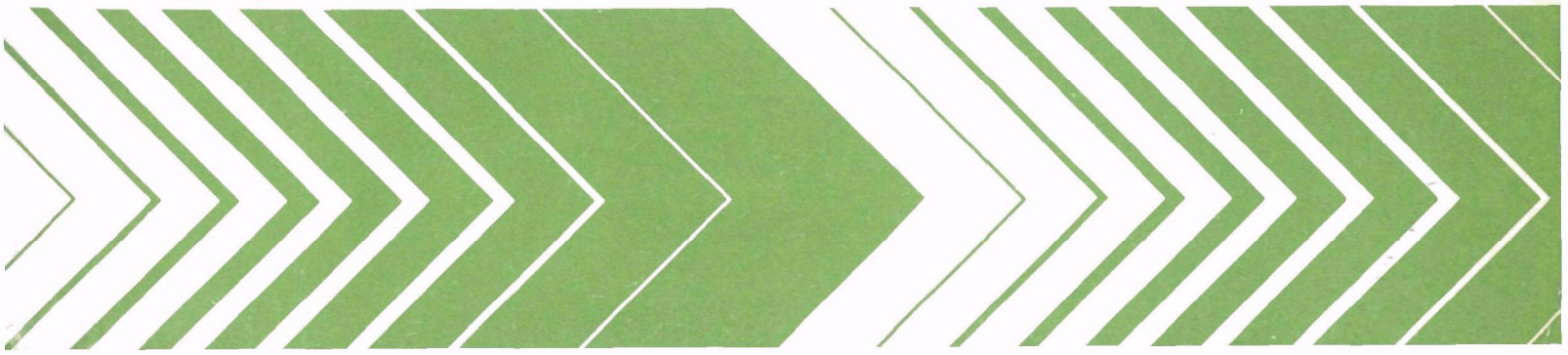

RESEARCH REPORTING SERIES

Research reports of the Office of Research and Development, U.S. Environmental Protection Agency, have been grouped into nine series. These nine broad categories were established to facilitate further development and application of environmental technology. Elimination of traditional grouping was consciously planned to foster technology transfer and a maximum interface in related fields. The nine series are:

1. Environmental Health Effects Research
2. Environmental Protection Technology
3. Ecological Research
4. Environmental Monitoring
5. Socioeconomic Environmental Studies
6. Scientific and Technical Assessment Reports (STAR)
7. Interagency Energy-Environment Research and Development
8. "Special" Reports
9. Miscellaneous Reports

This document is available to the public through the National Technical Information Service, Springfield, Virginia 22161.

EPA-600/9-78-013

June, 1978

COMPREHENSIVE STANDARDS:

THE POWER GENERATION CASE

EPA No. 68-01-0561

FUEL CYCLES FOR ELECTRIC POWER GENERATION

by Thomas H. Pigford*, Michael J. Keaton, Bruce J. Mann* and Peter M. Cukor and Gladys L. Sessler — Report No. EEED 101

FUEL CYCLE FOR 1000-Mw URANIUM-PLUTONIUM FUELED WATER REACTOR

by Thomas H. Pigford*, Robert T. Cantrell*, and K. P. Ang* — Report No. EEED 104

FUEL CYCLE FOR 1000-Mw HIGH-TEMPERATURE GAS-COOLED REACTOR

by Thomas H. Pigford*, Robert T. Cantrell*, K. P. Ang* and Bruce J. Mann** — Report No. EEED 105

FUEL CYCLE FOR COMBUSTION TURBINE-STEAM TURBINE COMBINED CYCLE POWER PLANT

by Peter M. Cukor — Report No. EEED 106

* *Department of Nuclear Engineering, University of California, Berkeley, California*
** *U. S. Environmental Protection Agency, Office of Radiation Programs, Las Vegas, Nevada*

Office of Research and Development
Environmental Protection Agency
Washington, D.C.

Project Officer: Paul H. Gerhardt

March, 1975

DISCLAIMER

This report has been reviewed by the Office of Research and Development, U.S. Environmental Protection Agency, and approved for publication. Approval does not signify that the contents necessarily reflect the views and policies of the Environmental Protection Agency, nor does mention of trade names or commercial products constitute endorsement or recommendation for use.

NOTICE

This publication is actually four reports under one cover. Each report is printed in its entirety, with its own page numbers, table of contents, etc, one following another.

FUEL CYCLES FOR ELECTRIC POWER GENERATION

Thomas H. Pigford*
Michael John Keaton
Bruce J. Mann**
and
Peter M. Cukor
Gladys L. Sessler

Teknekron Report No. EEED 101

January, 1973
(Revised March, 1975)

* *Department of Nuclear Engineering, University of California, Berkeley, California.*

** *Now at U.S. Environmental Protection Agency, Office of Radiation Programs, Las Vegas, Nevada.*

ABSTRACT

This study presents an illustrative data base of material quantities and environmental effluents in the fuel cycles for alternative technologies of thermally generated power. The entire fuel cycle for each of ten alternative technologies is outlined for a representative power plant generating 1000 Mw of electrical power. The required utilization of material resources and the fuel-cycle material quantities are indicated on a flow sheet for each technology. The technologies considered are:

1. Light-Water Nuclear Reactor
2. Coal: Appalachian Bituminous and Northwestern Sub-bituminous
3. Residual Fuel Oil
4. Natural Gas
5. High-Sulfur Coal, with Coal Gasification and Sulfur Removal
6. High-Sulfur Coal, with SO_2 Recovery by Wet-Limestone Scrubbing
7. Geothermal Steam
8. Breeder Fission Reactor
9. Solar Energy
10. Thermonuclear Fusion

TABLE OF CONTENTS

1. Introduction---------- 1

2. Electrical Power from Uranium Fueled Light-Water Reactor---------- 7

2.1 Reactor Characteristics---------- 7
2.2 Mining---------- 11
2.3 Milling and Concentration---------- 12
2.4 Conversion of U_3O_8 to UF_6---------- 14
2.5 Uranium Enrichment---------- 17
2.6 Fuel Conversion and Fabrication---------- 20
2.7 Nuclear Power Plant Operation---------- 22
2.8 Shipment of Irradiated Fuel and Solid Radioactive Wastes---- 43
2.9 Fuel Reprocessing---------- 44
2.10 Management of High-Level Radioactive Wastes---------- 49
2.11 Accidental Environmental Releases---------- 55
2.12 Effect of Plutonium Utilization---------- 59

References---------- 63

3. Electrical Power Generation from Coal:
Appalachian Bituminous and Northwestern Subbituminous---------- 67

3.1 Introduction---------- 67
3.2 Underground Mining in the Appalachian Region---------- 73
3.3 Surface Mining, Appalachian and Northwestern---------- 74
3.4 Cleaning and Preparation of Raw Coal---------- 79
3.5 Transport to Power Plant---------- 83
3.6 Coal Storage at Power Plant---------- 85
3.7 Power Plant Operation---------- 86
3.8 Flue Gas Effluents---------- 87
3.9 Fly Ash Removal---------- 89
3.10 Ash Storage---------- 90
3.11 Liquid Wastes---------- 91
3.12 Condenser Cooling---------- 92

References---------- 94

4. Electrical Power from Residual Fuel Oil---------- 97

4.1 Introduction---------- 97
4.2 Crude Oil Production---------- 101
4.3 Transport from Wells to Refinery---------- 103
4.4 Oil Refining---------- 103
4.5 Transport of Residual Fuel Oil---------- 110
4.6 Power Plant Operation---------- 110
4.7 Flue Gas Effluents---------- 111
4.8 Fly Ash Storage---------- 112
4.9 Condenser Cooling---------- 113

References---------- 114

5. Electrical Power from Natural Gas---------- 117

5.1 Introduction---------- 117
5.2 Gas Production---------- 117
5.3 Transmission of Raw Gas to Processing Plant---------- 121
5.4 Raw Gas Processing---------- 123
5.5 Transmission of Residual Gas to Power Plant---------- 126
5.6 Power Plant Operation---------- 126
5.7 Flue Gas Effluents---------- 127
5.8 Condenser Cooling---------- 128

References---------- 129

6. Waste Heat Rejection---------- 131

6.1 Once-Through Cooling Water---------- 131
6.2 Evaporative Cooling Towers and Spray Cooling---------- 134
6.3 Cooling Ponds---------- 143
6.4 Dry Cooling---------- 147

References---------- 155

7. Electrical Power from Low Btu Gas Made from High-Sulfur Coal------ 157

References---------- 164

8. Electrical Power from High-Sulfur Coal, SO_2 Removal by Wet Limestone Scrubbing---------- 165

8.1 Process Description---------- 165
8.2 Basis for Flowsheet Quantities---------- 169

References---------- 175

9. Electrical Power from Geothermal Steam---------- 177

9.1 Introduction---------- 177
9.2 Geothermal Steam-Extraction Wells---------- 182
9.3 Turbine-Generator Operation---------- 183
9.4 Air-Ejector Effluents---------- 183
9.5 Cooling System---------- 184
9.6 Disposal of Condensate Blowdown---------- 185
9.7 Power Plant Land Area---------- 187

References---------- 188

10. Electrical Power from Uranium-Plutonium Fueled Breeder Reactor---- 189

10.1 Reactor Characteristics and Fuel Requirements---------- 189
10.2 Cooling Irradiated Fuel---------- 193
10.3 Radiological Releases from Reactor---------- 194
10.4 Mining, Milling and Fuel Fabrication---------- 196
10.5 Shipment of Irradiated Fuel---------- 197
10.6 Fuel Reprocessing---------- 198
10.7 Management of High Level Radioactive Wastes---------- 199
10.8 Accidental Environmental Releases---------- 200

References---------- 201

11. Electrical Power from Solar Energy---------- 203

11.1 Introduction---------- 203
11.2 Solar Energy Collection---------- 203
11.3 Turbine Generator Operation---------- 207
11.4 Cooling System---------- 208
11.5 Electrical Energy Transmission---------- 209

References---------- 210

12. Electrical Power from Thermonuclear Fusion---------- 211

12.1 Energy Producing Reactions---------- 211
12.2 Power Conversion---------- 211
12.3 Fuel Materials---------- 215
12.4 Tritium Losses---------- 216
12.5 Activated Structural Material---------- 217

References---------- 221

13. Electrical Power Transmission---------- 223

References---------- 224

LIST OF FIGURES

2.1 Light Water Reactor Nuclear Power Plant---------- 9

2.2 Radioactivity Produced in One Year by a 1000 Mw(e) Light Water Nuclear Power Plant---------- 50

3.1 Coal Power Plant---------- 69

4.1 Residual Fuel Oil Power Plant---------- 99

5.1 Natural Gas Power Plant---------- 119

6.1 Light-Water Nuclear Plant, Waste-Heat Rejection by Once-Through Cooling---------- 132

6.2 Coal-Fired Power Plant, Waste-Heat Rejection by Once-Through Cooling---------- 133

6.3 Light-Water Nuclear Plant, Waste-Heat Rejection by Evaporative Cooling---------- 136

6.4 Coal-Fired Power Plant, Waste-Heat Rejection by Evaporative Cooling---------- 137

6.5 Light-Water Nuclear Plant, Waste-Heat Rejection by Cooling Pond---------- 145

6.6 Coal-Fired Power Plant, Waste-Heat Rejection by Cooling Pond---------- 146

6.7 Light-Water Nuclear Plant, Waste-Heat Rejection by Dry Cooling---------- 149

6.8 Coal-Fired Power Plant, Waste Heat Rejection by Dry Cooling---------- 150

7.1 Fossil Fueled Power Plant Fueled with Clean Power Gas Made from 3%-S Coal---------- 159

8.1 Coal Fired Power Plant - SO_2 Removal by Wet Limestone Scrubbing---------- 167

9.1 Geothermal Steam Power Plant---------- 179

10.1 Breeder Reactor Nuclear Power Plant---------- 191

11.1 Solar Power Plant---------- 205

12.1 Fusion Reactor Nuclear Plant---------- 213

LIST OF TABLES

2.1 Environmental Quantities for U_3O_8 - UF_6 Conversion---------- 16

2.2 Environmental Quantities for Uranium Enrichment---------- 19

2.3 Environmental Quantities for Fuel Conversion and Fabrication-- 21

2.4 Radioactivity in Reactor and Fuel Cycle for a 1000 Mw(e) Water Reactor---------- 23

2.5 Allowable Concentrations and Yearly Releases of Kr^{85} and I^{131} for Assumed Atmospheric Dilution---------- 29

2.6 Radioiodine Releases for 1000 Mw(e) Plant Extrapolated from 1971 Reported Releases---------- 31

2.7 Tritium in Liquid Effluents for Pressurized-Water Nuclear Power Plants, Extrapolated to 1000 Mw(e)---------- 35

2.8 Tritium Release to Coolant of PWR Plant Equilibrium Fuel Cycle---------- 36

2.9 Concentrations of Radionuclides in Liquid Effluents for Light-Water Nuclear Plant with Evaporative Cooling--------- 38

2.10 Estimated Yearly Quantities of Radionuclides, Other than Tritium, in Liquid Wastes Collected for Processing and Conversion to Solids, 1000 Mw(e) PWR---------- 40

2.11 Non-Tritium Radionuclides in Liquid Effluents for Light-Water Nuclear Power Plants, Reported for 1971---------- 42

2.12 Environmental Quantities for Fuel Reprocessing---------- 47

2.13 Estimated Release Rates for an Embedded Salt High-Level Waste Storage Facility. Full-Scale Operation---------- 54

3.1 Characteristics of Coal Assumed in Flowsheet---------- 72

3.2 Contour and Area Mining as a Percentage of Surface Mining in the Appalachian Region---------- 75

3.3 Water Usage in Coal-Cleaning Plants in Appalachian States------ 81

3.4 Thermal Energy Balance for Coal-Fired Power Plant - 1000 Mw(e)- 85

3.5 Uncontrolled Emissions of Gases and Particulates from Coal-Fired Power Plant - 1000 Mw(e)---------- 88

3.6 Radium and Thorium Radionuclides Released from Coal-Fired Power Plant Stack - 1000 Mw(e)---------- 90

3.7 Radium and Thorium Radionuclides in Stored Ash - 1000 Mw(e)---- 91

3.8 Boiler Blowdown Releases in Liquid Wastes - 1000 Mw(e)--------- 92

3.9 Cooling Tower Quantities for Coal-Fired Power Plant - 1000 Mw(e)---------- 93

4.1 Refinery Products---------- 105

4.2 Oil Refinery Gaseous Effluents---------- 107

4.3 Oil Refinery Liquid Effluents---------- 109

4.4 Gaseous Effluents from Oil Fired Power Plant - 1000 Mw(e)------ 111

4.5 Radium and Thorium Radionuclides in Residual Fuel Oil Ash------ 112

5.1 Gaseous Effluents from Natural Gas Processing Plant---------- 124

5.2 Gaseous Effluents from Natural-Gas-Fired Power Plant - 1000 Mw(e)---------- 127

6.1 Water Consumption for Evaporative Cooling Tower, Light-Water Nuclear Plant---------- 139

6.2 Heat Rejection by Forced Draft Dry Cooling 1000 Mw(e) Net Electrical Output---------- 152

8.1 Materials Entering the Scrubbing System---------- 171

8.2 Calcium and Sulfur Products Leaving the Scrubbing Stage-------- 172

8.3 Water Used in the Scrubbing System---------- 173

9.1 Typical Composition of Geothermal Steam---------- 181

9.2 Yearly Quantities of Non-Condensable Gases Emitted from Turbine Air Ejectors---------- 184

9.3 Composition and Yearly Quantities in Condensate Return Water---------- 186

11.1 Boiler Blowdown Releases---------- 208

12.1 Neutron Reactions for Structural Activation in a Fusion Reactor---------- 219

12.2 Radioactivity in Fusion Reactor Blanket Structure---------- 220

1. INTRODUCTION

It is the purpose of this study to present an illustrative data base for estimating environmental effluents from alternative technologies for thermally generated electrical power. The data have been developed to illustrate the characteristics and possible magnitude of effluents to various environmental media and to illustrate the effect of choices of technology on the media effluents. The entire fuel cycle for each alternate technology is examined, representative sources of environmental effluents at each step in the fuel cycle are identified, and material and environmental quantities are indicated on a representative flow sheet.

The following methods of generating electric power are discussed:

1. Light-water nuclear reactor
2. Coal: Appalachian bituminous and Northwestern subbituminous
3. Residual fuel oil
4. Natural gas
5. High-sulfur coal, with coal gasification and sulfur removal
6. High-sulfur coal, with SO_2 recovery by wet-limestone scrubbing
7. Geothermal steam
8. Breeder fission reactor
9. Solar energy
10. Thermonuclear fusion

The technologies include presently available means of electrical power generation and some examples of alternative means that may be available in

the near future and distant future. To provide an illustrative but specific data base, within a study whose scope was constrained by resource availability and time, it was necessary to select a limited number of examples from the very large number of existing and future alternative technologies, and from the very large number of technical and regional permutations thereof. Thus, only two major categories of coal, only one of the many means of removing sulfur from high-sulfur coal prior to combustion, and only one of the many processes for removing SO_2 from combustion gases were examined. Similarly, a number of developments which may be significant now, or possibly in the future, for low-effluent electrical power generation were not included, such as fuel cells, magnetohydrodynamic energy conversion, and direct-conversion solar cells. This study does not attempt to provide an encyclopedic and definitive analysis of the environmental releases from all possible fuel cycles, or even of a given fuel cycle. Nor does the study attempt to examine the range of values for residual releases associated with current and advanced technologies for electricity production and pollution control. Rather, by means of the specific materials shown in the flow sheets, it illustrates the type of analysis that is essential to a meaningful cost-benefit assessment of alternative technologies for electrical power generation.

Of all the fuel cycles considered here, the greatest amount of specific and detailed data was available for the light-water nuclear plants. This fact is reflected by the relatively detailed analysis of the light-water nuclear plant fuel cycle given in this report. Consequently, the section on the light-water reactor fuel cycle illustrates the kind of technical data base and analyses which should be developed for all the fuel cycles before comparable environmental impact assessments can be made, and it also illustrates the additional data on material and environmental release quantities needed

before a complete assessment of the environmental impact of this fuel cycle can be made.*

Each flow sheet is normalized to an assumed rate of electrical power generation of 1000 Mw(e) (10^9 watts). Material and environmental quantities are given in metric tonnes (Te), resulting from operating continuously for one year at full power, i.e., at 100% capacity factor. The quantities corresponding to actual operation at less than 100% capacity factor can be obtained by multiplying the flowsheet quantities by the appropriate fractional capacity factor. No attempt was made to assess environmental impacts resulting from the indicated effluents, although consideration of possible impact influenced and, in some instances, restricted the choices of effluents to be shown.

Each fuel cycle flow sheet shows waste heat rejection by evaporative cooling. Alternative heat-rejection flow sheets for light-water nuclear plants and fossil-fueled plants are shown separately in Chapter 6. The flow sheets for these alternative heat-rejection schemes, as well as the two flow sheets for reduction of SO_2 releases from high-sulfur coal (Chapters 7 and 8) are presented in forms that may be combined, so that, for a fuel cycle describing a combination of the alternative technologies, the effluents are readily obtainable. For example, a light-water nuclear plant with dry-cooling heat rejection operates at lower thermal efficiency and requires more make-up fuel, as shown in Figure 6.7. The increased environmental effluents in all other portions of the light-water nuclear fuel cycle are

* Determination of environmental impact also requires data and analyses concerning the effects of releases. Environmental effects are not specifically considered in this report.

then found by multiplying the quantities shown in the light-water fuel cycle flow sheet (Figure 2.1) by the ratio of fuel required for dry cooling to that shown on the flow sheet.

Brief consideration of electrical losses and land use associated with electrical power transmission is given in Chapter 13.

The overall fuel-cycle flow sheet format provides ready identification of the interaction of technological choices on effluents. The choice of a particular power generation technology involves environmental considerations not only at the generating plant site but also throughout the entire fuel cycle. Choice of a particular waste-heat rejection system for a given power generating technology involves more than consideration of water-supply and thermal discharge. It affects the ability to discharge liquid effluents by dilution and dispersion, and it can result, in some instances, in increased effluents to the air.

To the extent possible, environmental-release data from original sources were examined for technical consistency, leading in many instances to corrections based on material balances and thermodynamic calculations. A few of the flow sheets include results of original calculations for this study. However, most of the information on the flow sheets was adapted from data in various written sources.

Selection of data and the limited data evaluation possible for this study reflect, in many instances, individual judgment by the authors. Therefore, the authors accept full and sole responsibility for the judgment implied herein and for errors of fact and interpretation which may be present.

2. ELECTRICAL POWER FROM URANIUM FUELED LIGHT-WATER REACTOR

2.1 Reactor Characteristics

The fuel cycle flowsheets for the light-water nuclear power plant, shown in Figure 2.1, is characteristic of the current generation of 1000 Mw(e) water reactors now operating or under construction. There are small differences in the fuel enrichment, i.e. the percentage of U^{235} in the fresh fuel, and in the overall thermal efficiencies of pressurized water reactors (PWR) and boiling water reactors (BWR). However, corrections for these small differences would result in only small perturbations in the quantities shown in the flowsheets. Where there are significant differences in environmental releases from these two types of water reactors, such as releases of radioactive tritium and radioactive gases at the power plant site, the characteristic releases for each of the two reactor types are indicated.

The fuel cycle characteristics are calculated on the basis of the equilibrium annual reload cycle whereby each fuel element operates for 1100 full-power days prior to discharge, corresponding to an average thermal exposure of 33,000 Mw days/Te U and an average thermal specific power of 30 Mw/Te U. The reactor core is refueled by a program of partial batch replacement, in which one third of the reactor core is replaced with new fuel each year. The make-up fuel is sintered uranium dioxide clad in zircaloy tubing, containing uranium enriched to 3.3% U^{235}.

FLOW QUANTITIES ARE STATED IN METRIC TONNES / YEAR
UNLESS OTHERWISE INDICATED

100% CAPACITY FACTOR

EVAPORATIVE COOLING TOWER FOR WASTE HEAT REJECTION

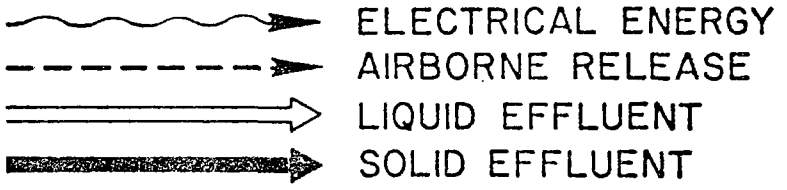

Te	=	METRIC TONNES
Ci	=	CURIES
kwh	=	KILOWATT-HOURS
Mw(e)	=	MEGAWATTS ELECTRICAL
MPC	=	MAXIMUM PERMISSABLE CONCENTRATION

Figure 2.1

Light Water Reactor Nuclear Power Plant 1000 Mwe Material And Environmental Release Flowsheet

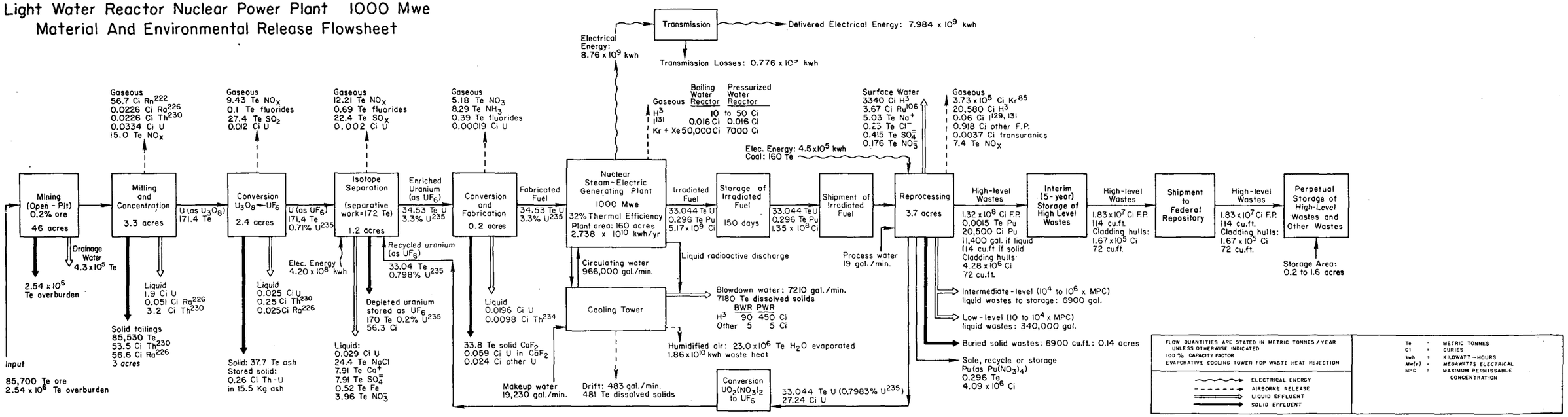

The discharge fuel is stored at the reactor site for 150 days to allow time for decay of radioiodine and U^{237}. The discharge fuel is then shipped to a reprocessing facility where the fuel is separated into uranium, plutonium, and mixed fission products. The recovered uranium, containing about 0.80% U^{235}, is returned as an input to the isotope-separation plant for re-enrichment. The quantities of transuranic and fission-product nuclides in the irradiated fuel at discharge and at various cooling times after discharge were calculated using the Origen code[1,2]. For the purpose of the present study it is assumed that the 0.296 tonnes of plutonium recovered yearly from the discharge fuel is stored.

The issue of plutonium utilization and its relevance to the analysis of material quantities and environmental impact of light-water nuclear power plants now being constructed is discussed in Section 2.12.

2.2 Mining

Uranium is assumed to be obtained from carnotite ore, nominally containing 0.2% uranium[3]. Open-pit mining is assumed[4], with a yield of 5400 Te ore[5] and 160,000 Te overburden[6] per acre of land disturbed. Mine drainage water discharged to the ground is calculated on the basis of 1350 gal/yr per Te of ore extracted[7]. The yearly quantity of 171.4 Te of uranium to be contained in the ore is based upon the yearly make-up to the reactor of 34.53 Te and a material balance on the isotope separation

plant with the indicated enrichments in the feed, the tails, the product, and the recycle uranium. No losses of uranium in the processing operations were considered in calculating this material balance.

The estimate for the required land is based upon the final environmental statement for a large uranium milling facility, which includes projections for both mining and milling operations[8]. It is expected that for a recovery of 1210 tonnes/yr of uranium concentrates, 3200 acres will be temporarily committed over a period of 12 years. Additionally, mining-related activities will require the commitment of 830 acres. Of these 830 acres, 100 acres will be permanently committed. Scaling to the present flow sheet yields an annual land requirement of 46 acres, only 1.2 acres of which are permanently committed.

2.3 Milling and Concentration

A model milling plant with a capacity of 960 Te per year of U_3O_8 is estimated to occupy 15.4 acres[9]. Of this total land usage, approximately 12.7 acres are devoted to a pond for the permanent disposal of mill tailings. This scales to 3.3 acres attributable to the milling of 171.4 Te per year of uranium for the light water reactor flowsheet. Of the 3.3 acres, approximately 2.7 are required for storage of solid tailings.

The process water requirement is 62 million gallons for the current model[9]. Waste liquors from milling are estimated at 1560 Te per Te of uranium processed[6], containing the following concentrations of radionuclides[6,10]:

Ra^{226}	1.9×10^{-7} μc/ml
Th^{230}	1.2×10^{-5} μc/ml

These concentrations multiplied by the yearly volume of liquid effluent, 2.67×10^{11} ml, result in the yearly releases of 0.051 curies of Ra^{226} and 3.2 curies of Th^{230} as shown in the flowsheet. The annual radioactive air releases of uranium and daughters are estimated to be 1.9 curies[9]. The waste liquor is stored in a retention basin to prevent discharge into the surface water and to minimize percolation into the ground.

Airborne radionuclide releases from the milling process include gaseous radon-222, a radioactive decay daughter in the U^{238} decay chain, and particulates of uranium and the uranium-decay daughters. Natural uranium contains 99.29% U^{238}, with a half life of 4.51 billion years, corresponding to 0.3308 curies of U^{238} per tonne of uranium. Even though the half life of U^{235} is 0.71 billion years, its relatively small concentration results in only 0.01513 curies of U^{235} per tonne of natural uranium. Therefore, the radioactivity in the milling wastes will be dominated by the U^{238} decay daughters. The yearly throughput of 171.4 Te of uranium corresponds to 56.7 curies of U^{238}, accompanied by an equal number of curies of each of the U^{238} decay daughters which are formed without chain branching. Therefore the total amount of Rn^{222} is 56.7 curies. It is assumed that all radon is released as gaseous effluent. The estimates of the releases of airborne particulates of Ra^{226}, Th^{230}, and uranium are based on data in references (6) and (10).

The greatest amount of radioactivity separated from natural uranium in milling appears in the solid tailings. Here it is assumed that all the radioactive daughters originally present in the uranium ore and not accounted for in the gaseous and liquid releases appear in the tailings. The most important species to be considered is 1622-year Ra^{226}, which is indicated on the flowsheet. The possible leaching of the chemical compounds containing Ra^{226} into the ground waters and surface waters near the milling storage site is an important environmental consideration.

2.4 Conversion of U_3O_8 to UF_6

The conversion operations involve removal of chemical contaminants and impurities from the uranium and conversion to the volatile hexafluoride as feed to the isotope separation plant. Conversion to the hexafluoride involves reduction to UO_2, hydrofluorination to UF_4 with anhydrous hydrogen fluoride, and fluorination to UF_6 with gaseous fluorine. In the hydrofluor process purification is then accomplished by fractional distillation of the UF_6. The principal environmental releases from this process are gases and solids. In the alternative solvent-extraction purification process, the U_3O_8 is first converted to uranyl nitrate in aqueous solution, which is then contacted with an immiscible organic liquid phase containing a complexing agent to extract the uranium preferentially from the impurities. The purified uranium is then converted to UF_6. Purification by solvent extraction involves larger quantities of liquid wastes but smaller quantities

of gaseous and solid wastes than the hydrofluor process. Both processes are used industrially, and the flowsheet quantities in this study are based upon a model plant analyzed by the AEC, in which each of the two processes contributes to half the production capacity. The environmental quantities for the AEC model plant, translated to amounts per ton of uranium processed, are tabulated in Table 2.1.

Table 2.1

Environmental Quantities for U_3O_8 - UF_6 Conversion*

Natural Resource Use[11]	
Land, acres per 1 Te U/yr production capacity	
Temporarily committed	.0138
Undisturbed area	.0126
Disturbed area	.0011
Permanently committed	.00011
Water, gal/Te U	
Discharged to air	2.04×10^4
Discharged to surface water	22.4×10^4
Fossil Fuel	
Electrical energy, kwh/Te U	1.16×10^4
Natural gas, cu.ft./Te U	1.7×10^5
Effluents[11]	
Chemicals, Te/Te U	
Combustion gases	
SO_x	0.16
NO_x	0.055
hydrocarbons	0.0035
CO	0.0011
Other gases	
F^-	0.0006
Solids	0.22
Radiological, Ci/Te U	
Gases	
uranium	0.00007
Liquids	
Ra^{226}	0.000148
Th^{230}	0.00148
uranium	0.000148
Solids	
Other than high-level	0.00154
Thermal, kwh/Te U	4.83×10^4

*Environmental release quantities shown on the flowsheet are obtained by multiplying the above data by the uranium throughput, 171.4 Te.

2.5 Uranium Enrichment

The feed streams to the isotopic separation plant consist of natural hexafluoride, containing 0.715% U^{235} in uranium, and uranium recycled from fuel reprocessing. In this flowsheet the recycled uranium is calculated to contain 0.7983% of U^{235}. Material balances on total uranium and on the contained U^{235} yield the uranium quantities shown on the flowsheet.

The total annual separative work to perform the indicated isotopic separation is obtained by summing the products of the uranium output quantities and the separative potential functions and subtracting the similar products involving the uranium input quantities[3]. The electrical input to the gaseous diffusion plant to perform this isotopic separation is calculated from data in Reference (12), using a ratio of 2435 kwh of electrical energy per kgm of separative work (SW), for a plant of total plant capacity of 8750 Te SW per year. The resulting annual electrical requirement of 4.20×10^8 kwh represents over 98% of the total energy input for the entire fuel cycle[4]. It represents 4.8% of the net electrical output from the 1000 Mw(e) nuclear power plant. For a net thermal efficiency of 32% for the light-water nuclear power plant itself, the electrical consumption for isotopic separation reduces the overall fuel cycle thermal efficiency to 30.5%. Essentially all of the electrical energy input to isotope separation appears eventually as waste heat, to be dissipated via surface water coolant or as humidified air from an evaporative cooling tower.

Additional environmental releases are scaled according to separative work, using the above data in electrical energy input and data from an AEC summary of the total environmental releases for the present diffusion-plant complex with a total capacity of 10,500 Te/yr of separative work[4]. The 172 Te/yr of separative work required for the light-water nuclear power plant amounts to 1.64% of the capacity of the total complex. The environmental release, expressed as quantities per unit of separative work (SW), are listed in Table 2.2. Effluents arising directly from the generation of electrical power to operate the diffusion plant are not shown.

Table 2.2

Environmental Quantities for Uranium Enrichment

Natural Resource Use	
Land[4], acres per Te SW/yr	
Temporarily committed	0.007
Undisturbed area	0.005
Disturbed area	0.002
Water[4], gal/Te SW	
Discharged to air (diffusion plant cooling)	7.1×10^5
Discharged to surface water at electrical generating plant	8.6×10^7
Electrical energy[12], kwh/Te SW	2.435×10^6
Effluents[4]	
Chemical, Te/Te SW	
Gases from coal-fired electrical power generation	
SO_x	34
NO_x	8.8
hydrocarbons	0.08
CO	0.22
particulates	8.8
Gases from chemical processing	
SO_x	0.13
NO_x	0.071
fluorides	0.004
Liquids	
Ca^{2+}	0.046
Cl^-	0.071
Na^+	0.071
SO_4^{2-}	0.046
Fe	0.003
NO_3^-	0.023
Radiological, Ci/Te SW	
Gases	
uranium	0.000017
Liquids	
uranium	0.00017
Thermal, kwh/Te SW	
at diffusion plant	2.435×10^6
at electrical generating plant (38% thermal efficiency)	3.972×10^6
total	6.407×10^6

*Environmental release quantities shown on the flowsheet are obtained from the above data, scaling according to the total separative work.

2.6 Fuel Conversion and Fabrication

The slightly enriched uranium hexafluoride shipped from the isotope-separation facility is hydrolyzed to uranyl fluoride, converted to ammonium diuranate, and calcined to the dioxide. The dioxide powder is pelletized, sintered, and loaded into stainless or zircaloy tubing which is then capped and welded. The fuel rods, each about 12 feet long and slightly less than 1/2 in. in diameter, are assembled in arrays to be handled as fuel elements.

Scrap material from fuel fabrication is dissolved in nitric acid, purified by solvent extraction, calcined and reduced to the dioxide.

The most significant chemical effluents are fluorine, fluorine compounds, and nitrogen compounds. The bulk of the fluorine released from the UF_6 appears ultimately as solid CaF_2 resulting from lime neutralization. The environmental effluents from a representative model fuel fabrication plant, with a capacity of 3 Te U/day, have been defined by the AEC[4]. These data, translated to environmental quantities per tonne of uranium fabricated, are listed in Table 2.3.

Table 2.3

Environmental Quantities for Fuel Conversion and Fabrication*

Natural Resource Use[4]	
Land, acres per Te U/yr	
Temporarily committed	0.0057
Undisturbed area	0.0045
Disturbed area	0.0011
Permanently committed	0
Water, gal/Te U	1.48×10^5
Electrical energy, kwh/Te U	4.83×10^4
Natural gas, cu.ft./Te U	1.02×10^5
Effluents[4]	
Chemical, Te/Te U	
Gases from coal-fired electrical power generation	
SO_x	0.65
NO_x	0.17
hydrocarbons	0.002
CO	0.004
Process gases	
F^-	0.00014
Liquids	
N as NH_3	0.24
N as NO_3^-	0.15
F^-	0.011
Solids (calculated as stoichiometrically equivalent to UF_6 feed)	
CaF_2	0.98
Radiological, Ci/Te U	
Gases	
uranium	0.000006
Liquids	
uranium	0.0006
Solids (buried)	
uranium	0.0017
Thermal, kwh/Te U	7.5×10^4

*Environmental release quantities shown on the flowsheet are obtained by multiplying the above data by the uranium throughput.

2.7 Nuclear Power Plant Operation

Environmental releases of concern at nuclear power stations are radiological, chemical, and thermal. The nature of the thermal releases and the alternative technologies to control these releases are discussed in the section on waste-heat rejection systems. The chemical releases are those characteristic of water treatment systems for steam power plant operation and are shown in the heat-rejection flowsheets. The radiological releases considered in these flowsheets are those resulting from normal operation.

The rate of formation and inventory of the radionuclides important in considering environmental radiological releases are shown in Table 2.4, calculated for a typical 1000 Mw(e) light-water reactor by means of the Origen code[1,2]. The radionuclide inventories are calculated on the basis of all fuel elements in the reactor being at the discharge composition. This is a good assumption for those radionuclides whose half lives are short compared with the fuel exposure life of three years. For longer half life radionuclides, the actual inventory in the reactor will be less than the amount listed, depending upon the fuel management program. For example, for a partial batch replacement of one third of the core every year, the inventory of 12.26-year tritium will be about two thirds of the inventory listed in the table. The yearly quantities in the discharge fuel are essentially independent of the fuel management program.

Table 2.4

Radioactivity in Reactor and Fuel Cycle for a 1000 Mwe Water Reactor[a]

Radionuclides	Half-Life	Reactor Inventory[b] 10^6 curies	In discharge fuel,[c] 10^6 curies/yr. at discharge	150-day decay	10-yr. decay	Elemental Boiling Temperature	Health Considerations
FISSION PRODUCTS							
Tritium[d], H^3	12.26 yr.	.0723	.0241	.0239	.0139	212°F (as HTO)	Internal Hazard
Krypton 83m	1.86 hr.	5.71	1.90	0	0	-243°F	External Radiation
85m	4.4 hr.	17.2	5.70	0	0		
85	10.76 yr.	1.16	0.383	0.373	0.201		
87	76 min.	34.0	11.3	0	0	(Gaseous)	
88	2.8 hr.	49.0	16.5	0	0		
89	3.18 min.	61.8	20.3	0	0		
90	33 sec.	58.5	22.7	0	0		
Total[e]		325	107.7	0.373	0.201		
Strontium 89	52.7 days	71.6	23.8	3.22	0	2490°F Nonvolatile	Internal Hazard, Bone and Lung
90	27.7 yr.	7.80	2.58	2.56	2.02		
Total[e]		526	174	5.78	2.02		
Iodine 129	1.7×10^7 yr.	3.03×10^{-6}	1.00×10^{-6}	1.02×10^{-6}	1.03×10^{-6}	333°F (Highly Volatile)	Internal Hazard, Thyroid
131	8.05 days	71.9	23.9	6.01×10^{-5}	0		
132	2.26 hr.	103	34.2	0	0		
133	20.3 hr.	137	45.6	0	0		
134	52.2 min.	156	51.8	0	0		
135	6.68 hr.	123	40.7	0	0		
136	83 sec.	54.0	17.9	0	0		
Total[e]		1017	337	6.11×10^{-5}	1.03×10^{-6}		
Xenon 131m	11.8 days	0.582	0.193	9.05×10^{-5}	0	-162°F (Gaseous)	External Radiation
133m	2.26 days	3.29	1.09	0	0		
133	5.27 days	137	45.6	0	0		
135m	15.6 min.	36.8	12.2	0	0		
135	9.14 hr.	25.7	8.52	0	0		
137	3.9 min.	132	43.8	0	0		
138	17.5 min.	128	42.5	0	0		
139	43 sec.	107	35.6	0	0		
Total[e]		680	225	9.05×10^{-5}	0		
Cesium 134	2.046 yr.	19.0	6.32	5.49	0.215	1238°F Volatile	Internal Hazard, Muscle Tissue
137	30.0 yr.	9.92	3.29	3.26	2.61		
Total[e]		595	198	8.75	2.83		
Zr, Nb, Mo, Tc, Ru, Rh, Pd, Ag, Cd, In, Sn, Sb		1880	625	54.1	0.0450	Nonvolatile	External and Internal Hazard
Rare Earths: La, Ce, Pr, Nd, Pm, Sm, Eu, Gd, Tb, Dy, Ho		4140	1374	48.8	0.416	Nonvolatile	External and Internal Hazard
Total Fission Products		11,970	3970 (1.067 Te/yr)	130	9.98		

Radionuclides	Half-Life	Reactor Inventory[b]	In discharge fuel,[c] 10^6 curies/yr.			Elemental Boiling Temperature	Health Considerations
		10^6 curies	at discharge	150-day decay	10-yr. decay		
ACTINIDES							
Uranium 237	6.75 day	108	35.9	7.42×10^{-6}	0	Nonvolatile	External and Internal Hazard
239	23.5 min.	1708	566	0	0		
Total		1816 (99.7 Te)	601 (33.0 Te/yr)	2.72×10^{-5}	2.15×10^{-5}		
Plutonium 238	86.4 yr.	0.138	0.0459	0.0483	0.0463	Nonvolatile	Internal Hazard, Bone, Liver, Lungs, Lymph
239	24,390 yr.	0.0318	0.0105	0.0107	0.0107		
240	6,580 yr.	0.0500	0.0166	0.0166	0.0166		
241	13.2 yr.	12.4	4.11	4.04	2.42		
242	3.79×10^5 yr.	1.24×10^{-4}	4.14×10^{-5}	4.14×10^{-5}	4.14×10^{-5}		
243	4.98 hr.	22.2	7.35	0	0		
Total[e]		34.9 (0.893 Te)	11.57 (0.296 Te/yr)	4.11	2.49		
Fissionable Pu ($Pu^{239} + Pu^{241}$)		(0.627 Te)	(0.207 Te/yr)				
Americium (241, 242m, 242, 243) and Curium (242, 243, 244)		1.14	3.79	0.340	0.0611	Nonvolatile	Internal Hazard
Total Actinides Th, Pa, U, Np, Pu, Am, Cm		3614	1198	4.45	2.55		
CLADDING							
Activated Zircaloy Cladding and Inconel Spacers (Cr, Mn, Fe, Co, Ni, Zr, Nb, Sb)		12.9 (28.2 Te)	4.28 (9.36 Te/yr)	0.967	0.109	Nonvolatile	
TOTAL FUEL AND CLADDING							
Fission Products, Actinides, Cladding		15,600 (132 Te)	5,170 (43.9 Te/yr)	135	12.6		

(a) Overall thermal efficiency 32%

(b) Calculated on the basis that all fuel has the composition of discharge fuel. For non-saturable species, whose half-lives are large compared with the typical fuel life of 3 years, the inventory within the reactor will be about one-half to two thirds of the value listed, depending upon the fuel management scheme. The inventories listed in the table are accurate for saturable (short-half-life) species. Material quantities in metric tonnes (Te) are listed in parentheses.

(c) Fuel cycle quantities are calculated on the basis of a fuel exposure of 33,000 Mwd/Te, 100% load factor. Material quantities are listed in parentheses.

(d) Quantities listed are for fission-product tritium only and do not include tritium formed by neutron-activation reactions in boron controls and contaminants.

(e) Totals include all isotopes of the element, including short-lived species not listed in the table.

In addition to the radioactive tritium resulting from fission, as listed in Table 2.4, tritium is also produced by fast-neutron reactions in boron used for reactor control, as well as by neutron reactions in lithium contaminants. This tritium probably remains in the matrix of the solid metal-clad boron control absorbers. Also, the absence of a phase change in the primary coolant of pressurized water reactors makes it possible to use soluble boron dissolved in the coolant, for reactivity control. Tritium produced from this dissolved boron contributes to the increased tritium environmental releases from pressurized water reactors.

The fission-product radioactivity involved in environmental releases in normal operation first reaches the reactor coolant through defects in cladding, except for tritium which also reaches the coolant by diffusing through the cladding. The principal fission products which reach the coolant in this way are radioiodine and the noble gases, krypton and xenon, which diffuse from the fuel matrix. Smaller quantities of non-volatile fission products recoil from the fuel matrix and escape through defective cladding. Fission products are also formed on the outer surface of the cladding due to uranium contaminants. Additional radionuclides formed in the coolant include activated corrosion products, tritium formed due to neutron reactions with dissolved boron and lithium, N^{16} formed by (n,p) reactions with oxygen, 9.99-min. N^{13} formed by (p,α) reactions with oxygen and (α,n) reactions with B^{10}, and 110-min. F^{18} formed by (p,n) reactions with oxygen.

The primary source of gaseous radioactive effluents arises from the extraction of non-condensable gases from the primary circuit. Secondary sources of gaseous effluents are gases evolved from primary coolant leaking from the reactor circuit, gases evolved from primary coolant handled in low-pressure coolant purification operations, gases evolved from primary coolant during refueling operations, gases evolved from the PWR steam (secondary) system containing radionuclides leaked from the primary system, gases evolved in the air-sparging of process equipment such as ion-exchange resin storage tanks, and gases evolved in the liquid waste handling system. Radionuclides released as gaseous effluents are krypton, iodine, tritium, and particulates, and tritium as tritiated water vapor.

Radioactive Noble Gases

In a pressurized water reactor power plant the primary gaseous source is of relatively small volume, because there is no pressure gradient for leakage of noncondensable gases into the primary coolant system and because the volume of noncondensable hydrogen and oxygen from radiolytic decomposition is suppressed by hydrogen pressurization. The noncondensable gas from primary sources is held up for 30 days, sufficient for all the noble-gas radionuclides other than 10.76-yr. Kr^{85} to be reduced to negligible levels by radioactive decay. It then flows through particulate filters and a charcoal filter for iodine removal and discharges to the atmosphere at the roof vent. Typically, the released krypton dilutes rapidly to a concentration far below the allowable level by the time it reaches the site boundary.

Radioactive noble-gas effluents are of greater magnitude in boiling water reactors because of the much higher volume of noncondensables to be extracted from the reactor coolant system. Without the benefits of hydrogen pressurization of the PWR, the BWR generates about 160 cu.ft./min of hydrogen and oxygen by radiolytic decomposition. Also, because the reactor coolant is the working fluid and expands in the turbine to pressures below atmospheric, about 18 to 40 cu.ft./min of air leaks into the primary coolant and interferes with condensation. The air and other noncondensables must be continuously removed by a steam ejector. A gas hold-up tank to provide significant radioactive decay time would be exorbitantly large. The practice in many large boiling water reactors already licensed and operating is to hold the gas up for 30 minutes, pass it through a particulate filter, and discharge it from a tall stack to enhance atmospheric dilution. The released gas thus contains a relatively high activity of the short-lived krypton and xenon radionuclides. The yearly release rate is typically about 3 million Ci/yr.

Newer BWR power plant installations employ additional technology to reduce noble-gas radioactive emissions. The air ejector gas passes through a recombiner to remove the explosion hazard from the hydrogen and oxygen formed by radiolytic decomposition of reactor water. The gas then passes through a charcoal bed where the continued absorption, diffusion, and desorption of krypton and xenon provide an effective delay time of about 16 to 24 hours for krypton and 10 to 15 days for xenon[13]. The gas is then filtered and released at the roof vent. Boiling water reactor

plants employing this technique for reducing noble-gas radionuclide effluents are expected to have noble-gas releases in the neighborhood of 30,000 to 50,000 Ci/yr[13,14].

If further reduction in the release of noble-gas radionuclides were desirable and justified, the small volume of gas evolved as the primary gaseous effluent in pressurized water reactors could be stored in compressed-gas tanks. Krypton and xenon can be removed from the steam-ejector gas in boiling water plants by cryogenic adsorption or condensation or by absorption in a chilled organic.

Gaseous Radioiodine

The secondary sources can, however, account for significant quantities of radioactive iodine in the gaseous effluents. Because iodine is selectively taken up by the thyroid gland when ingested, and because it can be transported to the more critical infant recipients via the milk-food chain, a small number of curies of radioiodine can be far more significant biologically than the relatively large releases of noble-gas radionuclides. For a more specific comparison, the maximum permissible concentrations of Kr^{85} and I^{131} in the present 10 CFR 20 regulations[15] and the design-objective concentrations proposed in 10 CFR 50, Appendix I[16], are listed below. Also listed are the yearly release rates which would result in a yearly average concentration complying with the quoted regulation, calculated on the basis of a typical site-boundary dilution factor of 2×10^{-12} sec/ml for building-vent release[17].

Table 2.5

Allowable Concentrations and Yearly Releases of Kr^{85} and I^{131} for Assumed Atmospheric Dilution

	Kr^{85}	I^{131}
maximum permissible concentration for unrestricted exposure of 500 mrem/yr, 10 CFR 20, microcuries per milliliter	3×10^{-7}	1×10^{-10}(a)
calculated(b) allowable yearly release, curies/yr	4.73×10^{6}	1580(a)
design-objective concentrations, proposed Appendix I, 10 CFR 50, microcuries per milliliter	6×10^{-9}(c)	1×10^{-15}
calculated(b) allowable yearly release, curies/yr	9.5×10^{4}	0.0158

(a) When allowance is made for the milk food chain the allowable iodine concentration and yearly release is lower by a factor of 700.

(b) Calculated by dividing the allowable specified concentration by the assumed yearly average dilution factor of 2×10^{-12} sec/ml for releases from top of reactor building. The dilution factor is the concentration at the site boundary divided by the emission rate at the reactor.

(c) Calculated from the dose specification of 10 mrem/yr in Appendix I.

The primary noncondensable gas streams in PWR and BWR plants are passed through charcoal, which is expected to remove about 99% of the contained iodine[17]*. In the BWR plants, radioiodine is associated with the secondary gaseous effluents, such as the steam leaking through the turbine gland seal, direct leakages of reactor coolant into the reactor and turbine building, liquid radiological waste system vents, and air sparging of process equipment for handling ion exchange resins[17].

The secondary sources are expected to contribute a greater source of gaseous iodine release for pressurized water reactors, even though only minor quantities of iodine are discharged via the primary gas treatment system[17]. Reactor coolant water containing dissolved radioiodine leaks into the steam system, and a portion of this iodine is evolved with noncondensables through the steam ejector system. An even larger source of gaseous radioiodine appears in the ventilation system for the auxiliary building where the reactor coolant is processed. Another source of gaseous radioiodine effluent results from the monthly purge of air within the reactor contaminant building[17].

The reported yearly releases of gaseous radioiodine from existing BWR and PWR power plants for the year 1971 have been published by the AEC[18], and are summarized in Table 2.6.

---

* The efficiency for removing iodine by charcoal depends upon the moisture content and upon the fraction of the iodine in the form of methyl iodide. Methyl iodide does not absorb readily on charcoal.

Table 2.6

Radioiodine Releases for 1000 Mw(e) Plant

Extrapolated from 1971 Reported Releases

	thermal power[a] Mw(e)	thermal energy produced[a] Mw-days	reported radioiodine release[a] curies/yr	radioiodine release extrapolated to 1.141×10^6 Mw days thermal energy[b] curies/yr
BWR	700	99,200	0.49	5.63
	to	to	to	to
	2 x 2527	513,000	8.11	18.0
PWR	600	209,000	< 0.0001	0.0001
	to	to	to	to
	2200	327,000	0.17	1.61

[a] USAEC, Report on Releases of Radioactivity in Effluents from Nuclear Power Plants for 1971, Directorate of Regulatory Operations, December, 1972.

[b] Corresponding to 1000 Mw(e), 32% thermal efficiency, 100% load factor, one-year operation.

Releases of radioiodine from BWR plants of thermal capacity varying from 700 Mw(e) to 2527 Mw(e) varied from about 0.5 to 4 Ci. Normalizing these data according to the reported thermal energy produced by each of these reactors during the year 1971 and scaling to the energy produced by a 1000 Mw(e) nuclear power plant operating at 32% thermal efficiency for a year at 100% load factor, releases varying from 0.30 to 18 Ci/yr of gaseous radioiodine are predicted. Similarly reported data for PWR plants with capacities from 600 Mw(e) to 2200 Mw(e), scaled to the 1000 Mw(e) plant at 100% load factor, are in the range of 0.0001 to 1.6 Ci of radioiodine. These reported releases are based upon primary sources of effluents. It is difficult to monitor radioiodine in the concentrations of significance in many of the secondary sources and reported operating experience does not yet verify the iodine releases associated with these sources.

For the purpose of the present flowsheet the gaseous radioiodine release is that which would comply with the proposed Appendix I guidelines, assuming the dilution factor given in Table 2.5.

Tritium in Gaseous Effluents

Tritium appears in the gaseous releases as tritiated water vapor carried in the air streams. The releases here are based upon Rodger's[17] estimates of 100 Ci/yr of tritium released to the BWR coolant, and 500 Ci/yr to the PWR reactor coolant and his estimate that 10% of the tritium released to

the coolant will appear in the gaseous releases as tritiated water vapor, the remaining 90% appearing in the liquid effluents. If additional technology were employed to decrease tritium in the liquid effluents, some increase in the release of gaseous tritium would be expected.

Radioactive Particulates in Gaseous Effluents

The AEC report of radioactive effluent releases for 1971 lists airborne radioactive particulate releases for BWR and PWR plants[18]. Scaling these to the yearly energy production assumed for the present study, as was done previously for radioiodine, particulate releases varying from about 0.06 to 2 Ci/yr are estimated for BWR plants and 0 to 0.037 Ci/yr for PWR plants.

Direct and Skyshine Radiation

Although the radionuclides N^{13}, and N^{16}, and F^{18} appear in the effluent gases, their contribution is small compared to the other gaseous radionuclides. However, in boiling water reactors N^{16} is a source of off-site radiation which may have environmental significance. The N^{16} in the reactor coolant follows the steam through the external steam separator, piping, turbine, and condenser, and forms a distributed source of 6.28-Mev gammas throughout this circuit. In some plants no biological shielding is provided around the turbine and steam piping; in some plants only peripheral shadow shielding is provided. Consequently, the N^{16} decay gammas can penetrate through weakly attenuating structures to the site boundary. Upwardly

directed N^{16} decay gammas undergo Compton scattering with air, resulting in lower-energy scattered gammas reaching the site boundary[35]. In some BWR installations this direct and "skyshine" radiation could be a principal contributor to off-site radiation exposures at the site boundary, once the exposures from radionuclide effluents are reduced to the levels proposed in 10 CFR 50 Appendix I.

Tritium in Liquid Effluents

Reported releases[18] of tritium in BWR liquid effluents for 1971, scaled according to the energy production of a model 1000 Mw(e) plant, agree well with the present[17] estimates of 90 Ci/yr for a BWR plant. However, for the PWR plants there are wide variations in the reported tritium in liquid effluents. The 1971 data for PWR plants and their extrapolation to a model 1000 Mw(e) plant at 100% load factor, are listed on Table 2.7.

Table 2.7

Tritium in Liquid Effluents for Pressurized-Water Nuclear Power Plants, Extrapolated to 1000 Mw(e)

thermal power[a] Mw(e)	thermal energy produced[a] Mw-days	reported tritium release in liquid effluents[a] curies/yr	tritium release extrapolated to 1.141×10^6 Mw-days[b] curies/yr
600	209,000	1,680	9,168
615	120,000	725	6,041
1,300	352,000	154	499
1,825	559,000	5,830	11,900
2,200	327,000	118	411
1,518	418,000	266	726
1,347	418,000	4,570	12,470

[a] USAEC, Report on Releases of Radioactivity in Effluents from Nuclear Power Plants for 1971, Directorate of Regulatory Operations, December, 1972.

[b] Corresponding to 1000 Mw(e), 32% thermal efficiency, 100% load factor, 1-yr. operation.

These variations in tritium in liquid effluents may result in part from variations in the extent to which neutrons are absorbed in soluble boron controls, as well as in solid boron. For example, a detailed estimate[18] of the rate of release of tritium to reactor coolant for a 1000 Mw(e) PWR nuclear plant operating with an equilibrium fuel cycle if given in Table 2.8

Table 2.8

Tritium Release to Coolant of PWR Plant Equilibrium Fuel Cycle[18]

	expected release of tritium to coolant, curies/yr
ternary fission	110
burnable poison rods	10
control rods	410
soluble poison boron in reactor coolant	560
Li^7 reaction	11
Li^6 reaction	6
deuterium reaction	1
	1108

The startup cycles require more control poison and may result in a rate of tritium production in the coolant greater than that listed above[19]. Variations in tritium release may also be attributable to the metal used for fuel cladding. Older PWR plants, which have stainless steel fuel

cladding instead of zircaloy, would be expected to have greater releases of tritium to the coolant and to the environment.

A liquid release of 450 Ci/yr of tritium, as is assumed here for the PWR[17], may be a problem in some installations, depending upon the type of waste heat rejection system which is used. The liquid radioactive wastes are normally discharged into the cooling water returned from the power plant to the environment, so the concentration of tritium in the exit liquid effluent is the tritium production rate divided by the coolant flow rate. For once-through cooling, with a temperature rise of 15°F, the coolant stream leaves a light-water nuclear plant at a flow rate of 966,000 gal/min, so that the 450 Ci/yr of released tritium dilutes to an average concentration of 2.3×10^{-7} microcuries/ml. This is considerably lower than the maximum permissible concentration of 3×10^{-3} microcuries/ml for tritium in water from 10 CFR 20, and it is lower than the tritium design objective of 5×10^{-6} microcuries/ml proposed in Appendix I of 10 CFR 50.

With evaporative cooling the rate of discharge of blowdown water to the surroundings is typically about one hundred times lower, e.g., 7210 gal/min, resulting in a diluted tritium concentration of 3.1×10^{-5} microcuries/ml, as shown in Table 2.9. If the waste tritium is injected directly into the cooling water which circulates between the cooling tower and condenser, much of it will appear as tritiated water vapor in the humidified air leaving the cooling tower. For a water make-up rate of 19,230 gal/min, as shown on the flowsheet, the concentration of tritium in the water blowdown leaving the

Table 2.9

Concentrations of Radionuclides in Liquid Effluents for Light-Water Nuclear Plant with Evaporative Cooling

	yearly release in liquid effluents Ci/yr	Yearly average concentrations in water blowdown from plant site[a]: liquid wastes discharged into blowdown water[b] μCi/cc[d]	liquid wastes discharged into condenser circulating water[c] μCi/cc	design-objective concentrations proposed in Appendix I, 10 CFR 50[16] μCi/cc
Tritium				
BWR	90[17]	6.3×10^{-6}	2.4×10^{-6}	5×10^{-6}
PWR	450[17]	31×10^{-6}	12×10^{-6}	5×10^{-6}
Radionuclides other than H^3	5[16]	3.5×10^{-7}	3.5×10^{-7}	$\times 10^{-8}$

(a) Prior to dilution in natural bodies of water into which the blowdown water is discharged.

(b) Based upon 7210 gal/min of water blowdown.

(c) Based upon 19230 gal/min of make-up water.

(d) $\mu Ci = 10^{-6}$ Ci.

plant would then be reduced to 1.2×10^{-5} microcuries/ml, still a factor of 2.4 above the proposed design objectives. Using the atmospheric dilution parameters assumed for Table 2.5, the off-site concentration of tritiated water vapor will be far below the 10 CFR 20 maximum permissible concentration, even without taking into account the further dilution resulting from the mixing of tritiated water vapor with the cooling tower air.

Technology is available to reduce the tritium effluents below the levels indicated in the flowsheet. Reactor coolant water withdrawn for auxiliary processing can be returned to the reactor coolant system, although some increase in tritium concentration in the reactor coolant and in the gaseous effluents will result[17]. Although expensive, isotope separation[3] can remove tritium before the process water from the liquid waste management system is discharged as liquid effluent.

Other Radionuclides in Liquid Effluents

A representative estimate[19] of the yearly quantities of radionuclides other than tritium which appear in the liquid wastes to be treated by the radioactive liquid waste management system for a 1000 Mw(e) pressurized water reactor is given in Table 2.10. The function of the waste management system is principally that of concentrating these non-volatile radionuclides so that they can be encapsulated or cast into solids and shipped for permanent storage. Evaporator condensates still contain finite carryover of radionuclides, but the radionuclide content of the distillate can be further reduced by ion exchange.

Table 2.10

Estimated Yearly Quantities of Radionuclides, Other than Tritium, in Liquid Wastes Collected for Processing and Conversion to Solids, 1000 Mw(e) PWR[19]

	Ci/yr		Ci/yr
Cr^{51}	0.31	Nb^{95}	1.76
Mn^{54}	1.02	Mo^{99}	13,200
Mn^{56}	27.8	Te^{132}	735
Fe^{59}	1.65	I^{131}	6,960
Co^{58}	31.0	I^{132}	295
Co^{60}	3.66	I^{133}	5,400
Sr^{89}	9.57	I^{134}	22.7
Sr^{90}	6.06	I^{135}	2,740
Sr^{91}	2.62	Cs^{134}	914
Y^{90}	1.12	Cs^{136}	88.0
Y^{91}	22.2	Cs^{137}	4,820
Y^{92}	5.40	Ba^{140}	2.40
Zr^{95}	1.78	La^{140}	2.47
Zr^{97}	1.14	Ce^{144}	8.23
Total Activity			35,300 Ci/yr

According to the proposed Appendix I, 10 CFR 50, design objectives, the radioactive liquid waste management system should be capable of reducing the yearly release of non-tritium radionuclides to 5 Ci/yr or less, and this appears attainable with evaporation and ion exchange. Appendix I further proposes a design-objective concentration of non-tritium radionuclides in the liquid effluents from the plant, prior to dilution of these effluents in natural bodies of water, of 2×10^{-8} microcuries/ml. This is easily attainable with once-through cooling, where dilution of 5 Ci/yr in discharge water flowing at 966,000 gal/min (cf. Section 6.1) results in a discharge concentration of 2.6×10^{-9} microcuries/ml. However, as in the case of tritium, operating with evaporative cooling results in less discharge water for dilution of the liquid effluents. For the water blowdown rate of 7210 gal/min for the evaporative cooling tower shown on the flowsheet (cf. Section 6.2), the discharge of 5 Ci/yr would result in a discharge concentration of 3.5×10^{-7} microcuries/ml, as shown in Table 2.9. Further treatment of the process waste to reduce the non-tritium liquid radionuclide discharge to about 0.3 Ci/yr would be required in this example for evaporative cooling.

The reported non-tritium liquid radionuclide releases for 1971[18] are listed in Table 2.11.

Table 2.11

Non-Tritium Radionuclides in Liquid Effluents for Light-Water Nuclear Power Plants Reported for 1971

	thermal power[a] Mw(t)	thermal energy produced[a] Mw-days	reported non-tritium liquid release[a] curies/yr
BWR			
	700	99,200	6.2
	1670	181,000	0.014
	1850	381,000	32.2
	1930	486,000	12.1
	2011	475,000	19.7
	2 x 2527	513,000	23.2
PWR			
	600	209,000	0.012
	615	120,000	81.1
	1300	352,000	0.96
	1825	559,000	5.88
	2200	327,000	0.74
	1518	418,000	0.15
	1347	418,000	1.54

[a] USAEC, Report on Releases of Radioactivity in Effluents from Nuclear Power Plants for 1971, Directorate of Regulatory Operations, December, 1972.

Non-Radiological Chemical Releases

Chemical releases are characteristic of those involved in the boiler water treatment system of a steam power plant (cf. Chapter 3). There are additional chemical releases involved in the water treatment systems for plant cooling water (cf. Section 6.2). Thermal releases to surface water and the release of large quantities of humidified air, airborne liquid drift, the concentration of dissolved solids by evaporative cooling systems, and environmental and land-use quantities associated with other possible heat-rejection systems appropriate to light-water nuclear power plants are discussed in Chapter 6.

2.8 Shipment of Irradiated Fuel and Solid Radioactive Wastes

Prior to shipment, the irradiated nuclear fuel removed yearly from the core of a light-water reactor is stored at the nuclear power plant site for about 150 days to allow time for decay of 8.05-day I^{131} and to allow for decay of 6.75-day U^{237} so that its radioactivity level in the uranium recovered from fuel reprocessing will be comparable to the radioactivity of natural uranium[3]. Shipment of the shielded irradiated fuel to the reprocessing plant involves, in normal accident-free operation, only very small exposures from gamma radiation penetrating through the shield of the shipping container. No other environmental effects from shipping, in normal operations, are identified in typical environmental impact reports[20]. Although possible releases of radionuclides from some classes of postulated shipping accidents are considered in

typical environmental impact reports, consideration of these accidents and other accidental environmental releases throughout the nuclear fuel cycle is beyond the scope of the present study (cf. Section 2.12).

2.9 Fuel Reprocessing

Irradiated fuel is reprocessed for the purpose of recovering the contained plutonium and uranium, which have significant monetary value as fuel. If recovery of the plutonium and uranium were not economically essential, the solid irradiated fuel and its contained fission products could be stored as high-level wastes. Metal-clad UO_2 fuel rods are, in fact, an excellent physical form for long and safe storage of the high-level, long-lived radioactive fission products, plutonium, and other transuranic elements present in irradiated fuel.

Fuel reprocessing technology involves chopping the fuel rods into pieces, separating the radioactive cladding hulls from the UO_2 fuel, dissolving the UO_2 in acid, and performing chemical separation by liquid-liquid extraction and ion exchange to yield an aqueous stream of purified uranyl nitrate ($UO_2(NO_3)_2$), an aqueous stream of purified plutonium nitrate ($Pu(NO_3)_4$), and an aqueous stream of dissolved and suspended fission-product salts. In some processes part of the purification is accomplished by fluoride distillation.

In the present flowsheet the uranium product is then converted to uranium hexafluoride for recycle to the isotope separation plant. The plutonium product is stored (cf. Section 2.13). The high-level fission product aqueous stream is either stored in large tanks for up to 5 years, or it is converted immediately into a dry chemical form and cast into an inert solid matrix. Within ten years after separation the high-level radioactive wastes are to be shipped, in converted solid form, to a federal repository for long-term storage[21].

The yearly rates at which radioactivity in the irradiated fuel from a 1000 Mw(e) light-water nuclear plant appears at the reprocessing plant, after 150 days cooling, are listed in the fifth column of Table 2.4. When the fuel is dissolved all of the noble-gas fission products, containing 373,000 Ci/yr of 10.76-yr Kr^{85}, are discharged to the atmosphere through a stack tall enough to obtain adequate atmospheric dispersion before the discharge gas reaches the site boundary.

The tritium in the irradiated fuel forms tritiated water upon fuel dissolution. About 86% of this is evolved as tritiated water vapor, and the remaining 14% is ultimately discharged with the liquid effluents into the surface water leaving the plant site[4]. The ultimate disposition of the additional tritium formed in solid boron control absorbers, and the possible release of portions thereof when the control absorbers are removed from the reactor and stored or processed, is not shown on this flowsheet.

The indicated iodine release is based upon data in Reference (2), using an iodine decontamination factor of 1000 for the iodine scrubber system.

The release of 3.7 Ci/yr of Ru^{106} in the liquid wastes, 0.9 Ci/yr of other airborne fission products, and 0.0037 Ci/yr of transuranics in gaseous effluents are derived from data in Reference (4), scaled to the uranium throughput shown on the flowsheet. Additional environmental quantities, expressed as quantities per tonne of uranium throughput, are listed in Table 2.12, derived from data on a model plant with a capacity of 2.5 tonnes/day[4].

The volumes of high level wastes, intermediate level liquid wastes, low level liquid wastes, and solid wastes shown on the flowsheet are derived from data in Reference (2). Plutonium remaining with the high level wastes is 0.5% of the total plutonium processed[2].

Solid wastes of lower activity result from off-gas cleanup, solvent washes, spent ion exchange resin, and other cleanup and decontamination operations. These wastes, principally in the form of nitrate and nitrite solutions, are concentrated and crystallized as salt and stored in metal containers inside a concrete vault. Typically, these wastes contain about 8 grams of plutonium, 0.2 kilograms uranium, and less than 0.01% of the total fission products per tonne of uranium processes[23]. Using data on this flowsheet, the yearly quantities for the 1000 Mw(e) nuclear plant are 3600 Ci of plutonium, less than 13,000 Ci of fission products, and 0.002 Ci of uranium.

Table 2.12

Environmental Quantities for Fuel Reprocessing*

Natural Resource Use[4]	
Land, acres per 1 Te U/yr capacity	
Temporarily committed	0.11
Undisturbed area	0.10
Disturbed area	0.01
Permanently committed	0.001
Water, gal/Te U[4]	
Discharged to air	1.1×10^5
Discharged to water	1.7×10^5
Total	2.8×10^5
Electrical Energy[4], kwh/Te U	1.28×10^4
Effluents	
Chemical[4], Te/Te U	
Combustion Gases	
SO_x	0.18[a]
NO_x	0.20[b]
hydrocarbons	0.0006[a]
CO	0.0011[a]
F^-	0.0014
Liquids	
Na^+	0.15
Cl^-	0.006
$SO_4^=$	0.01
NO_3^-	0.006
Radiological, Ci/Te U	
Gases (including entrained matter)	
Kr^{85}	11,290[c]
H^3	596[c]
I^{129}	3×10^{-5} (c)
I^{131}	1.82×10^{-3} (c)
other fission products[4]	0.028
transuranics[4]	1.1×10^{-4}
Liquids	
H^3	97[c]
Ru^{106} (4)	0.11
Thermal, kwh/Te U[4]	5.10×10^5

*Environmental release quantities are obtained by multiplying the above data by the uranium throughput.

[a]Estimated effluent gases from combustion of equivalent coal for power generation.

[b]23% of total is estimated effluent gas from combustion of equivalent coal for power generation[4].

[c]Calculated from data in Table 2.4.

Lower-level dry chemical wastes resulting from fluorination operations are stored as dry fluorides of aluminum, sodium, and magnesium in a steel lined vault. These wastes contain about 3 grams of plutonium, 1.75 kilograms of uranium, and less than 0.01% of the fission products per tonne of uranium processed[23]. This corresponds to yearly quantities for the 1000 Mw(e) nuclear plant of 1370 Ci of plutonium, 0.02 Ci of uranium, and less than 13,000 Ci of fission products.

It should be recognized that the indicated releases and process quantities in fuel reprocessing indicated on the flowsheet are those resulting only from the fuel from the reference 1000 Mw(e) light water nuclear plant. Commercial fuel reprocessing plants are now designed to handle uranium throughputs from 1 to 4 tonnes per day[4], and even larger throughputs are calculated for the most economical operations. Therefore, the total releases from the fuel reprocessing plant will be greater than the quantities indicated on the flowsheet. For example, a reprocessing plant with a capacity of 4 Te U/day could process the fuel from 42 light water nuclear plants operating as shown in the flowsheet, all operations at 100% load factor.

There are several technologies which could be applied to reduce the radionuclide effluents in fuel reprocessing, if such reduction were found to be necessary or desirable.* For example, tritium can be removed as a gas, rather than being incorporated in aqueous dissolver solutions, by

* The AEC has published proposed numerical guides specifying radionuclide releases from light water nuclear power plants which meet the provision of the 10 CFR 20 regulations that radiation exposures shall be "as low as practicable." No such guides have been issued for other operations in the nuclear fuel cycle.

heating sheared fuel in air or oxygen prior to dissolution. Krypton can be removed by cryogenic distillation or by selective absorption in chilled organic, followed by storage in gas cylinders. Iodine can be further removed by scrubbing the dissolver off-gases with concentrated nitric acid, oxidizing the iodine to solid I_2O_5, followed by further treatment of the off-gases with a charcoal scrubber or with a bed of silver-deposited zeolite. These operations concentrate on recovery of radionuclides from the primary sources of gaseous and liquid effluents. It would be expected that secondary sources of iodine, such as process cell ventilation air, building ventilation air, etc., could also contribute to iodine releases (see discussion of gaseous radioiodine releases in Section 2.7).

2.10 Management of High-Level Radioactive Wastes

The radioactivity associated with the fission products produced by the 1000 Mw(e) light-water nuclear power plant in one year of operation as a function of elapsed time since the irradiated fuel was discharged from the reactor, is shown in Figure 2.2. Data for this figure were calculated on the assumption that 0.5% of the plutonium in the discharge fuel remains with the high-level fission-product wastes[2]. It is apparent that significant quantities of radioactivity remain after hundreds of years of storage, so the waste-management program must provide for isolation of these wastes from the environment.

Figure 2.2

Radioactivity Produced in One Year by a 1000 Mw(e)
Light Water Nuclear Power Plant

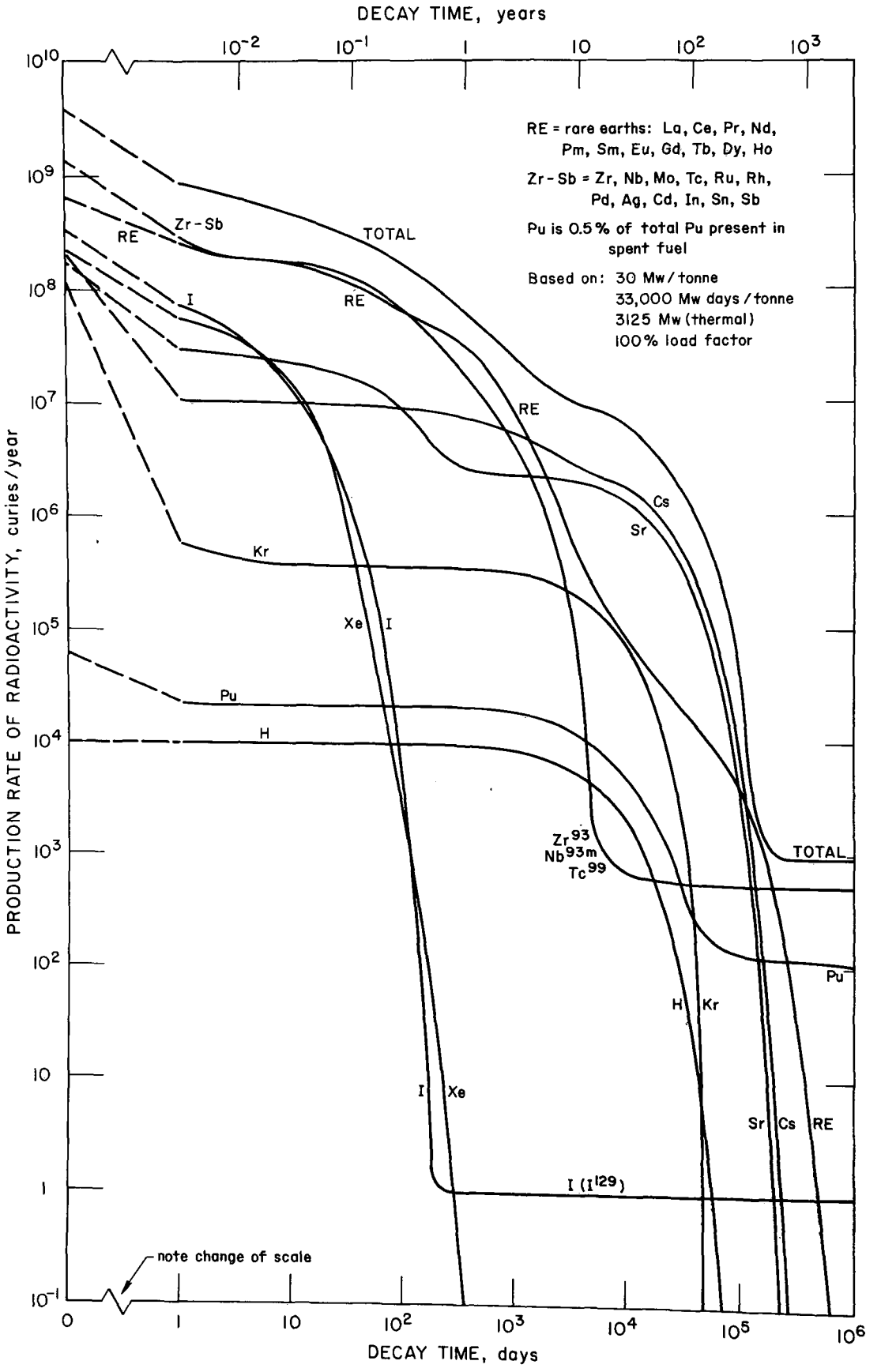

The solidified and encapsulated high level wastes are to be shipped to a federal repository for interim or perpetual storage within 10 years after they are separated in the chemical reprocessing plant. Typically, the wastes would be cast in a solid matrix in the form of steel-clad cylinders 6 in. in diameter and 8 to 10 ft. long[2,24]. One cubic foot of the solid matrix is allotted to the fission products resulting from 10,000 Mw-days of thermal energy production in the reactor[2], resulting in 114 cu.ft./yr. of solid high-level matrix containing the high-level fission products from the 1000 Mw(e) light water nuclear power plant. This is equivalent to 58 waste containers per year. Each waste container, containing 10-year old fission products, generates about 5000 watts of thermal power.

Two approaches to long-term isolation are considered[34]. One involves disposal of the wastes in some form and location such that the long term integrity of each waste container, and continual surveillance thereof, would be unnecessary. Continual isolation from the environment would be obtained by the favorable retention properties of the surrounding natural media. Such disposal would involve no plans or intent to recover the emplaced high-level wastes. Disposal in bedded salt deposits is an example of this apporach. Another approach involves retrievable storage, whereby the long-term integrity of the storage container is to be preserved and is to be verified by periodic monitoring, with provisions for retrieving and, if necessary, reconstituting the wastes if monitoring

indicates the possible deterioration of an individual container or of any of the several other additional isolation barriers that are provided. This is characteristic of the storage of fission-product waste canisters in water-filled canals in a Federal repository, which would be designed and constructed for this purpose. The present AEC plans for waste management appear to allow for both approaches, with individual surveillance storage as a possible interim method until uncertainties associated with non-surveillance disposal are resolved.

Perpetual storage in bedded salt would require about 1.6 acres per year for the amount of fission-product high-level wastes produced in the 1000 Mw(e) light-water nuclear power plant[2]. If canal storage is used, data in ORNL-4451[2] lead to the calculation that about 50 sq.ft./yr. of canal storage would be required for the solidified wastes from the 1000 Mw(e) nuclear plant.

The AEC now contemplates[4,22] a storage facility located in some remote area, constructed for a service life of 100 years. The massive structure would provide radiation shielding, and the structure could be kept serviceable beyond its design lifetime. The overall site would occupy about 1000 acres, of which about 30 acres would be devoted to an initial module capable of storing the annual high-level wastes from 250 1000 Mw(e) light-water nuclear power plants.

Storage of high-level wastes in bedded salt is expected to result in only small releases of radionuclides to the environment. The projected radiological and chemical releases include gaseous Kr^{85}, H^3, and He that result from radioactive decay; Rn^{222} and Rn^{220} emitted by radioactive sources occurring naturally in the underground salt formation; H_2 and HCl resulting from salt decomposition, corrosion, electrolysis, and radiolysis; diesel exhaust fumes; and salt particles[24].

Average annual release rates[24] projected for an embedded-salt storage facility are tabulated in Table 2.13.

The embedded salt facility was designed to handle a yearly input of 21,300 containers of high-level solidified waste by the year 2000, with a total accumulated inventory of 200,000 containers. It would appear, therefore, that the projections in Table 2.13 for the effluents for the entire facility at full-scale operation would be attributable to the accumulated output of several hundred 1000 Mw(e) nuclear power plants or to the yearly output of several thousand plants. Therefore, the effluents resulting from storage of high level wastes from the reference 1000 Mw(e) nuclear plant would be several orders of magnitude lower than those listed in Table 2.13.

Table 2.13

Estimated Release Rates for an Embedded Salt High-Level Waste Storage Facility. Full-Scale Operation[24]

Radiological, Ci/yr.	
high-level waste particles	0.007
alpha waste particles	0.04
Kr^{85} (from spontaneous fission)	0.014
H^3 (from spontaneous fission)	0.0009
Rn^{222} (natural sources)	0.9
Rn^{220} (natural sources)	0.04
Chemical, s.cu.ft./min.	
H_2 (corrosion, radiolysis, electrolysis)	37
He (alpha decay)	0.001
HCl (brine decomposition)	0.07
CO_2 (diesel exhaust)	50
CO (diesel exhaust)	0.05
NO_2 (diesel exhaust)	0.05
SO_2 (diesel exhaust)	0.03
CH_2O (diesel exhaust)	0.0007
Other	
Soot (diesel exhaust)	2 lb/yr.
Salt particles	5 lb/yr.

2.11 Accidental Environmental Releases

Additional environmental impact and risk can result from radiological and chemical releases from various possible accidents through the fuel cycle. Accidents of environmental significance range over a broad spectrum, from small accidental releases of almost routine occurrence to accidents of low probability but serious consequence. The environmental consequence alone is determined by the magnitude of a given accidental release and by its biological and ecological effect. However, for a given accident, the environmental significance and environmental risk are not determinable unless the accident consequence and accident probability are both known.

It is apparent that there will be some accidents near the low-consequence end of the accident spectrum which are of low enough consequence to involve negligible risk, even if the accident were assumed to occur with certainty, i.e., with a probability of unity. This is characteristic of the accidental-release estimates that can be obtained from present environmental impact statements. These estimates are useful in identifying the sources and magnitude of some of the accidental releases that might be more likely to occur. Elsewhere there are also estimates of releases from other accidents, including accidents* of high consequence and undoubtedly low probability. However, these release estimates for high-consequence accidents are not accompanied by estimates of accident

---

* Examples are the loss-of-coolant design basis accident, and its associated radiological releases, as well as the many other accidents and associated releases, considered in the safety analysis of nuclear power plants.[29] Accidents with greater releases are also possible. There are similar examples throughout much of the nuclear fuel cycle.[25]

probabilities that can be reasonably associated with these releases. Therefore, accidental release estimates now available in the public literature do not yet provide a data base for the objective and comprehensive analysis of the environmental significance of accidental environmental releases. High-consequence release estimates without associated probabilities, and low-consequence estimates alone, are insufficient and misleading for comprehensive determination of environmental impact. The difficulties of estimating accident probability and accidental risks, and the questionable and invalid assumptions and conclusions that can arise as a result of this lack of information, are considered in the following paragraphs.

Various estimates of probabilities of nuclear reactor accidents have appeared in the literature[27,28,29,30] but are of questionable validity because of the lack of meaningful and reliable input data on failure mechanisms and failure rates, because of the very limited extent to which real and possible failure mechanisms have been considered, and because of idealized and optimistic assumptions of uncorrelated failure modes made in calculating probabilities of multi-event accidents.

Correlated failure modes result, for example, when the operation of a particular component or system is adversely affected by failure of nearby or surrounding equipment or by failure of other equipment and systems to which it is attached. For example, an otherwise reliable

plumbing system may be damaged and become inoperative if the surrounding building structure fails. To idealize each component and system as failing only by the statistical occurrence of that item alone, as in fault-tree analysis incorporating the assumption of independent random probability of failure of each component, results in simple mathematical techniques but in idealistically low probabilities of multi-event accidents. Techniques are available to take correlated failures into account, and these should be applied. However, because of the lack of sufficiently reliable input data, accurate and definitive probability and risk analysis will still not be possible for low-probability high-risk accidents. Therefore, one must also know the bounds of the probability estimates before meaningful conclusions as to risks can be made.

Present estimates of accident probabilities that have appeared in the literature do not, therefore, define an upper bound or even a lower bound to probabilities and risks. The bounds of the estimates are unknown, the input data are of doubtful reliability for analysis of these low-probability events, and the flaws and assumptions in analytical techniques lead to probability estimates which can be over-optimistically low.

Although estimating meaningful accident probabilities is extremely difficult, it is less difficult to estimate the consequences of a postulated accident and then to determine how low the accident probability must be for the risk to be reasonable. By "reasonable" we mean that the risk

be of the same order of magnitude as other calculable risks to which society is frequently exposed, such as driving automobiles. Such analysis shows that for some high-consequence accidents the accident probability must be less than one such accident in several hundred thousand years of reactor operation. Unfortunately, the excellent record of operating experience for nuclear power plants and for other facilities in the nuclear fuel cycle is statistically insignificant for the purpose of confirming the expected low probabilities of high-consequence accidents. These probabilities and their associated risks are unknowable by experience. Therefore, risk analysis for the low-probability accidents must rest upon prediction, but the prediction must result from a far more detailed and careful analysis and with more reliable and meaningful input data than has occurred at present.

Before any conclusion can be reached that the probabilities of releases from high-consequence accidents are so low as to be meaningless for the purpose of analyzing impact, quantitative estimates of accident probabilities and quantitative estimates of risks are needed. In the absence of such probability and risk estimates* a conclusion as to which accidents have environmental significance is meaningless. It has been shown[30] that some accident probabilities suggested as being so low as to be insignificant can actually involve risks and environmental impacts significantly greater than from normal operation. Quantification of acci-

---

* Although the idealized estimates of accident probabilities which have recently appeared in the literature[27,28,29] are quoted in some environmental impact statements as background information, they have not been used as the basis for assessing risk limits of high-consequence accidents for the purpose of environmental impact assessment[31].

dental releases and associated accident probabilities, and quantification of risks, are necessary before meaningful conclusions can be drawn concerning the environmental significance of the broad spectrum of possible accidents. The necessary data are not yet available.

2.12 Effect of Plutonium Utilization

For the purpose of the present study it is assumed that the plutonium recovered from the discharge fuel is stored. This is characteristic of the present mode of operation of light water reactors, but it is an unrealistic assumption for even the present reactors over their operating life of 30 to 40 years. The 0.296 Te of plutonium recovered yearly from the discharge fuel contains 0.208 Te of fissile plutonium.

This recovered plutonium could be recycled as makeup fuel for this same reactor by blending it with uranium, thereby decreasing the required enrichment of U^{235} in the makeup uranium. Alternatively, the plutonium recovered from the discharge fuel of several water reactors operating without plutonium recycle could be blended with natural uranium to form the makeup fuel for other water reactors. On the basis of these schemes the fuel value of plutonium has been estimated to be about $10 per gram of fissile plutonium[32]. Thus, the plutonium recovered yearly from the discharge fuel in the present flowsheet is worth about $2 million/yr. in a water-reactor nuclear power economy. This compares with $61 million/yr.

as the value of the total electrical energy produced, assuming a generating cost of 8 mills per kwh(e) and a load factor of 100%. In fact, it is the fuel value of the recovered plutonium which is the principal justification for reprocessing discharge fuel. There is indeed economic gain from the recovered uranium. However, at an enrichment of 0.798% U^{235}, the discharge uranium is worth about $30/kg. in the form of UF_6. The value of the uranium recovered from fuel reprocessing for the 1000 Mw(e) nuclear plant is about $920,000/yr. as compared with the plutonium value of about $2 million/yr. Clearly, utilization of the recovered plutonium is significant to the economy of these water reactors. The plutonium must be used, and its use will involve new environmental considerations.

There are several alternative ways of utilizing the plutonium recovered from water-reactor fuel. Fissile plutonium is more valuable as a fuel for fast breeder reactors because of its more favorable neutronic properties in a fast reactor spectrum. Although a fast-breeder reactor can be fueled solely on natural uranium makeup when it has reached its equilibrium fuel cycle, a significant inventory of plutonium is needed to provide the initial fuel loading and startup reloads for such reactors. This should provide the most beneficial use of plutonium from water reactors once economical fast-breeder power reactors are available for new construction to meet the expanding power demands. However, the time schedule for development of economical fast-breeder power reactors cannot result in a significant demand for water-reactor plutonium as fast-breeder

startup fuel until the latter part of this century. Assuming introduction of the first commercial fast breeder reactors in the mid-1980's, plutonium inventories aimed at this use will not become a significant factor in the plutonium market before the early 1990's[33]. Storage of plutonium for such a long period and consequent deferral of income from plutonium values would be extremely expensive. In the continued absence of any military market for plutonium recovered from water-reactor fuel, it is clear that there is an enormous financial incentive to utilize this plutonium as water reactor fuel. Recyle of plutonium in light-water reactors is an economic necessity[33], and the environmental consequences of plutonium recycle are a necessary part of a complete analysis of the light-water reactor fuel cycle.

Plutonium utilization would entail its shipment to a fuel refabrication plant, where it would be chemically converted to the oxide and mixed with uranium oxide. The uranium releases associated with fabrication (cf. Table 2.3) correspond to a total release of 0.8% of the uranium processed. If the 0.296 Te of recovered plutonium, with a total radioactivity level of 4.09×10^6 Ci*, were fabricated into a UO_2- PuO_2 fuel with the same losses, the plutonium effluents would amount to about 33,000 Ci/yr. Because of the biological hazard of plutonium, it is apparent that fabrication operations involving plutonium fuel must be carried out with process losses several orders of magnitude below those now characteristic of

* This includes radioactivity from decay of Pu^{236}, Pu^{238}, Pu^{239}, Pu^{240}, Pu^{241}, and Pu^{242} (cf. Table 2.4). Additional radioactivity is associated with radioactive-decay daughters of Pu^{236} and Pu^{241}, which grow in after fuel reprocessing.

uranium fuel fabrication. At equilibrium, the plutonium concentration in the uranium fuel and the yearly amounts of plutonium handled in the fuel cycle would be several times greater than the amounts shown in the non-recycle flow sheet[32].

Because of the extreme toxicity and radioactivity of plutonium, consideration of the effects of plutonium recycle or of equivalent means of utilizing plutonium as a reactor fuel is an important element in a comprehensive environmental analysis of technologies of electrical power generation. Although such an analysis is an intrinsic part of the comprehensive environmental impact study for the light-water reactor fuel cycle, limitations of time precluded further consideration of the effects of plutonium utilization in water reactors in the present study.

REFERENCES

1. Arnold, E. D., Phoebe-A Code for Calculating Beta and Gamma Activity and Spectra for ^{235}U Fission Products, ORNL-3931, USAEC (July, 1966).

2. Siting of Fuel Reprocessing and Waste Management Facilities, ORNL-4451 (July, 1970), U.S. AEC, Clearinghouse for Federal Scientific and Technical Information, Springfield, Virginia, 22151.

3. Benedict, M. and T. H. Pigford, Nuclear Chemical Engineering, McGraw Hill, New York (1958).

4. United States Atomic Energy Commission, Environmental Survey of the Nuclear Fuel Cycle, Fuels and Materials Directorate of Licensing, U.S. Atomic Energy Commission, November, 1972.

5. United States Atomic Energy Commission, Draft Detailed Statement on the Environmental Considerations by USAEC, DML, Relating to the Proposed Issuance of an Operating License to Humble Oil and Refining Company for the Highland Uranium Mill, USAEC Docket No. 40-8102 (April 15, 1972).

6. Humble Oil and Refining Company, Environmental Report, Highland Uranium Mill, Converse County, Wyoming, Docket No. 40-8102 (July, 1971).

7. Utah International, Inc., Draft Detailed Statement for Highland Uranium Mill, Supplemental Environmental Information Requested by the AEC in letter dated February 11, 1972, Docket No. 40-6622, June 23, 1972.

8. Highland Uranium Mill. Final Environmental Statement; Directorate of Licensing; AEC; Washington, D.C. (March, 1973).

9. Environmental Survey of the Uranium Fuel Cycle, U.S. Atomic Energy Commission, Fuels and Materials Directorate of Licensing, WASH-1248 (April, 1974).

10. Humble Oil and Refining Co., Response to Agency Comments on Draft Statement, Highland Uranium Mill, USAEC Docket 40-8102 (August, 1972).

11. Kerr-McGee Corporation, Uranium Hexafluoride Plant, Supplemental Applicant's Environmental Report, USAEC Docket No. 40-8027 (June, 1972).

12. United States Atomic Energy Commission, AEC Data on New Gaseous Diffusion Plants, ORO-685 (April, 1972).

13. Denton, H. R., Statement on the Sources of Radioactive Material Effluents from Light-Water Cooled Nuclear Power Reactors and State of Technology of Waste Treatment Equipment to Minimize Releases, U. S. AEC, Docket RM-50-2 (January 10, 1972).

14. Detroit Edison Company, Enrico Fermi Atomic Power Plant, Unit 2, U. S. AEC Docket No. 50-341.

15. U. S. Atomic Energy Commission, 10 CFR 20.

16. U. S. Atomic Energy Commission, Proposed As Low As Practicable Amendment to 10 CFR 50 Licensing of Production and Utilization Facilities, Federal Register, Vol. 36, No. 111, June 9, 1971.

17. Rodger, W. A., Testimony on Behalf of the Consolidated Utility Group, presented at the AEC Rule-Making Hearing on the Proposed Appendix I to 10 CFR 50, Docket RM-50-2 (April, 1972).

18. Report on Releases of Radioactivity in Effluents from Nuclear Power Plants for 1971, Directorate of Regulatory Operations, U. S. Atomic Energy Commission (December, 1972).

19. Pacific Gas and Electric Company, Preliminary Safety Analysis Report for the Diablo Canyon Nuclear Power Plant, Unit 2, U. S. AEC, Docket No. 50-323.

20. U. S. Atomic Energy Commission, Final Environmental Statement Related to Operation of Monticello Nuclear Generating Plant, Northern States Power Co., Docket No. 50-263 (November, 1972).

21. 10 CFR 50, Appendix F.

22. U. S. Atomic Energy Commission, Management of Commercial High Level Wastes, SECY-2371 (March, 1972).

23. U. S. Atomic Energy Commission, Final Environmental Statement Related to Operation of the Midwest Fuel Recovery Plant by the General Electric Co., Docket No. 50-268 (December, 1972).

24. U. S. Atomic Energy Commission, Environmental Statement Radioactive Waste Repository, Lyons, Kansas (June, 1971).

25. Pigford, T. H., "Study of Behavior of Clouds and Contaminants in the Lower Atmosphere Over the K-25 Area," M.I.T. EPS, Report K-904 (April, 1952). (Declassified)

26. Beattie, J. R. and P. M. Bryant, "Radiological Dose Computation," Nuclear Safety, 11, (6) 490-491 (November-December, 1970).

27. Otway, H. J. and R. C. Erdmann, "Reactor Siting from a Risk Viewpoint," Nuclear Engineering and Design, 13 (1970), 365-376. North-Holland Publishing Co.

28. Starr, C., M. A. Greenfield, and D. F. Hausknecht, "Public Health Risks of Thermal Power Plants," Nuclear News, 15, No. 10, 37-45 (October, 1972).

29. Otway, H. J. and R. C. Erdmann, "Risk Estimate for an Urban-Sited Reactor," Nuclear Technology, 12, 173-184 (October, 1971).

30. Pigford, T. H., "Protection of the Public from Radioactivity from Nuclear Power Plants," Proceedings of the 1971 Symposium on Nuclear Science, I.E.E.E. (February, 1972).

31. U. S. Atomic Energy Commission Regulatory Staff, Testimony, U. S. AEC Docket No. 50-341.

32. U. S. Atomic Energy Commission, Potential Nuclear Power Growth Patterns, Division of Reactor Development and Technology, WASH 1098 (December, 1970).

33. Dawson, F. G., W. C. Astley, J. Haley, J. R. Tomonto, T. Trocki, "Plutonium Utilization in Light-Water Reactors," Proc. U. N. International Conference on the Peaceful Uses of Atomic Energy, Vol. 9, 131-147 (September, 1971).

34. Rubin, J. H., "Evolving U. S. Policies in Radioactive Waste Management," AIF/ANS International Conference, Washington, D. C. (November, 1972).

35. Ward, J. T., Jr., and T. H. Pigford, "A Dose Rate Kernel for Air-Scattered ^{16}N Decay Gamma Rays," Trans. ANS, 19, 446-447 (1974).

3. ELECTRICAL POWER GENERATION FROM COAL: APPALACHIAN BITUMINOUS AND NORTHWESTERN SUBBITUMINOUS

3.1 Introduction

In this chapter the use of coal as a fuel for electrical generation is examined. Environmental releases are quantitatively presented at each stage of the fuel cycle, from the mining of coal through the generation of electricity at a 1000 Mw(e) power plant operating at 100% of capacity. Two types of coal are considered: Appalachian, for which both surface-mining and underground mining are examined; and Northwestern, for which only surface mining is meaningful. The corresponding illustrative flowsheet is shown in Figure 3.1.

Characteristic physical and chemical properties are assigned to the coal from each region being studied. Deviations from these values are, however, significant. Within any region or mine, or even a particular seam, the composition of the solid organic materials, designated as coal, may vary. For example, in the state of Utah sulfur content can vary from less than .5% to 8%; in Montana, the recorded calorific values range between 6000 and 13000 Btu/lb. Thus, although the generalizations used here will not apply to a particular coal bed, they can be used as a basis for significant comparisons between different types of coal and between coal and other fuels.

The Appalachian region* contributed 70%[24] of the total U.S. coal production in 1970, virtually all of it bituminous. Recoverable resources in Appalachia

---

* The Northern Appalachian region is comprised of central and western Pennsylvania, the northern part of West Virginia and Ohio. The central Appalachian region includes Virginia, the eastern portion of Kentucky, and the southern portion of West Virginia. Alabama, Maryland, Tennessee are also included, with smaller contributions.

FLOW QUANTITIES ARE STATED IN METRIC TONNES / YEAR UNLESS OTHERWISE INDICATED

100% CAPACITY FACTOR

EVAPORATIVE COOLING TOWER FOR WASTE HEAT REJECTION

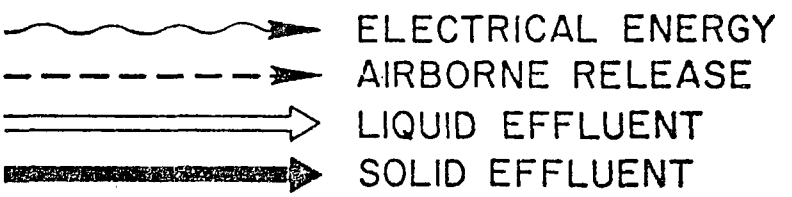

Te = METRIC TONNES
Ci = CURIES
kwh = KILOWATT-HOURS
Mw(e) = MEGAWATTS ELECTRICAL
MPC = MAXIMUM PERMISSABLE CONCENTRATION

When values for Northwestern coal differ from those of Appalachian coal, they are stated in brackets, [ ].

Figure 3.1

COAL POWER PLANT 1000 Mwe
Material and Environmental Release Flowsheet

When values for Northwestern coal differ from those of Appalachian coal, they are stated in brackets, [ ]

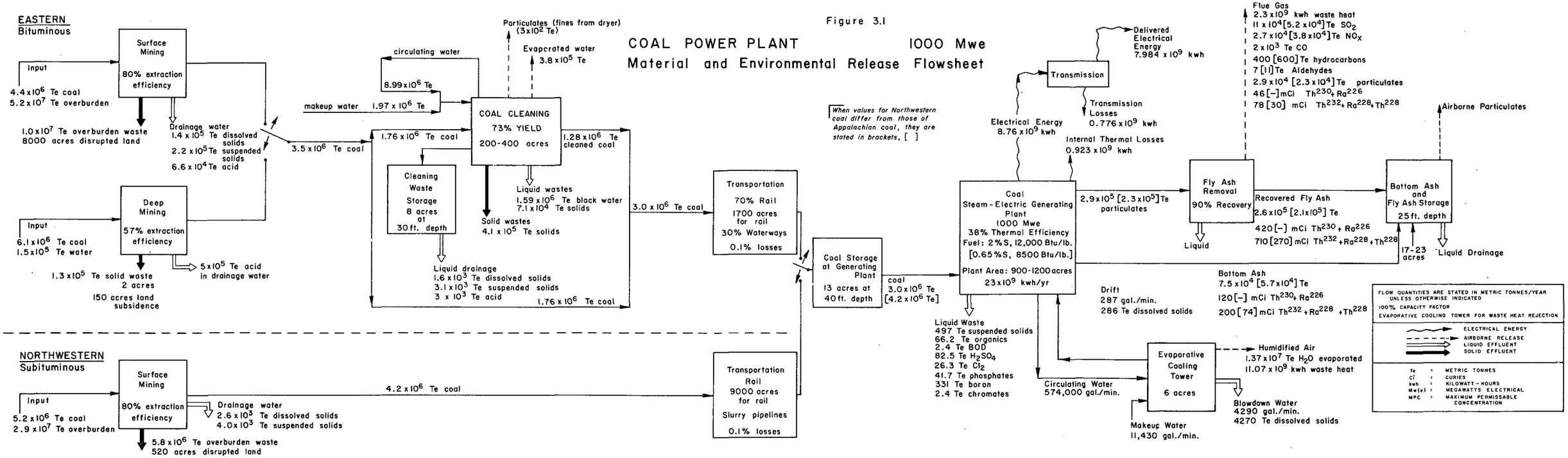

are estimated to be 35%* of total coal reserves in the U.S. For this study Appalachian coal is characterized by a heating value of 12000 Btu/lb., ash content of 12% and density of 85 lb/ft^3. 8% of the low-sulfur, U.S. coal (less than 0.6 lb. of sulfur/10^6 Btu.) is found in this region[24] or, alternatively stated, 20% of Appalachian coal is low-sulfur. The average sulfur content in the Appalachian region, by states,is between 1 and 3%[36]. For this study, a sulfur content of 2% is assumed. Of the 400 million tonnes of coal produced in 1970 in the Appalachian region, 35% was surface-mined[24]. The ratio of the depth of overburden to the thickness of seam (the stripping ratio), for the strippable mines is 15:1[27]. 30% of these mines are on slopes exceeding 20°, while 40% are on slopes between 15° and 20°[26].

Of the total U.S. known coal reserves, 70% are located west of the Mississippi river[28]. However, on the basis of calorific values, the percentage is only 45%. The Western coals comprise 67%[27] of the low-sulfur coal in the U.S. Approximately 60% of these coals are located in the states of Montana and Wyoming, which are the states to which this report will refer as Northwestern. Northwestern coals are characterized here by a heating value of 8500 Btu/lb., an ash content of 6.8%, a density of 81 lb/ft^3, and a sulfur content of 0.65%[36]. Essentially all of the 10 million[24] tonnes of subbituminous coal (2% of the total U.S. production) produced annually in these states is surface-mined

---

* Measured reserves calculated from p.116, Reference (23). They are for beds 28 and more inches thick and overburdens less than 1000 feet thick.

on inclinations of less than 15°, with an estimated stripping ratio of 7:1. Contrasted with Eastern coal, for which the moisture content is negligible, the moisture content of Northwestern coals can be as high as 30%[26].

The flow chart for coal-fired electrical generation shows the confluence of two alternative routes at the 1000 Mw(e) power plant. One route originates with Northwestern coal, while the other route originates with Appalachian coal. The branch for Appalachian coal is subdivided prior to the coal-cleaning phase, according to the two major modes of mining operations. Although on an average regional basis 35% of the raw Appalachian coal originates in underground mines and 65% in strip mines, the present flowsheet traces the cases for which the Appalachian coal is either exclusively deep-mined or exclusively surface mined.

The assumed characteristics used here are tabulated in Table 3.1.

TABLE 3.1

Characteristics of Coal Assumed in Flowsheet

	Appalachian	Northwestern
Density	85 lb/ft^3	81 lb/ft^3
Heat value*	12000 Btu/lb	8500 Btu/lb
Ash content	12%	6.8%
Sulfur content*	2%	0.65%
% surface mined	35	100
Stripping ratio	15:1	7:1

* Values apply to coal entering the power plant.

3.2 Underground Mining in the Appalachian Region

Back-calculating from the quantity of coal consumed in power generation yields a total annual production requirement for raw coal of 3.5×10^6 Te. Based on an extraction efficiency of 57%[1] the required in-ground coal resource is 6.1×10^6 Te.

Water is used in underground mining at the rate of 10 gallons per ton of coal mined[8]. This scales to 1.5×10^5 Te/yr of water for the present flowsheet.

The value of 57% for the extraction efficiency is applicable to the traditional room-and-pillar method which is employed almost exclusively in the U.S. This method requires that supporting columns of coal be left behind in the mines. It is an inherently low-efficiency method and one which results in the subsidence of about one-third[25] of the undermined land over a period of 30-50 years[24]. Since 0.0001 acres of land have been undermined[25] in the U.S. for each ton of coal extracted from underground mines, the area caused to subside annually in our model, in which 3.5×10^6 Te/yr are extracted by deep-mining, is 150 acres.

Solid wastes from underground coal mining are generated at the rate of 36 tons per 1000 tons of raw coal produced[2], which scales to 1.3×10^5 Te/yr. Assuming that these solid wastes are stored in piles 40 feet deep and that the coal density is 85 lb/ft^3, the land requirement is 2 acres per year. Equivalently, there are approximately 50,000 tonnes of solid waste occupying an acre.

Increasing the practice of backfilling underground mines will, besides decreasing the subsidence of land surfaces, also lower the amount of solid wastes and the associated acidic drainage, assuming that proper sealants are used.

An estimated 4×10^6 tons of acid drain annually from underground coal mines in the U.S.[10]. The annual coal requirement for the reference 1000 Mw(e) power plant, 3.5×10^6 Te, represents 1.39% of the underground-mined coal production in the U.S.* This fraction of the total annual drainage is 5.5×10^4 Te of acid. Assuming that the drainage from a mine occurs over a period of 10 years, 5.5×10^5 Te of acid are attributable to the yearly supply of deep-mined Appalachian coal to a 1000 Mw(e) power plant. With currently feasible techniques, as much as 90% of the acid could be neutralized[25].

3.3 Surface Mining, Appalachian and Northwestern

There has been a steady increase in the percentage of U.S. coal production which is surface-mined. In 1920 surface mining accounted for just 2% of total production[25]. In 1973 the figure was more than 50%[27]. Principal environmental considerations involve the reclamation of land. In this regard

---

* In 1970, the total Appalachian underground production was 2.52×10^8 tonnes[24].

the problems in the East with hilly terrain, and the difficulties of re-vegetation in those areas of the West which may receive fewer than 10 inches of annual rain, are of particular concern. The wastes from contour-mining on the steeper slopes in the East were, in previous years, piled on resulting land benches or dumped downhill. The area-mining technique used on the more horizontal surfaces in the East, and almost exclusively in the West, is one in which the excavated area is back-filled, with the exception of the most recently mined strip. The resulting furrowed surfaces have not, generally, been in a usable state, either for agriculture or wildlife.

Table 3.2 shows the percentage of contour and area mining in the Appalachian states.

TABLE 3.2

Contour and Area Mining As a Percentage of Surface Mining in the Appalachian Region[23]

State	Contour (percent)	Area (percent)
Kentucky	20	80
West Virginia	90	10
Virginia	90	10
Tennessee	100	0
Ohio	0	100
Pennsylvania	25	75

Ideally, the overburden from surface mines is excavated and replaced in properly ordered layers. Besides allowing reutilization of mined areas and decreasing land requirements for waste storage, reclamation prevents other damaging impacts. For example, it is reported that increases by a factor of 500 are common in the erosion and sedimentation rates from surface mines over that of neighboring lands. Exposure of material in unfilled mining areas and in waste piles results in oxidation of these materials by air and water. The surfur-bearing layers are often directly above and below the coal deposits. As a result these layers are particularly susceptible to oxidation, causing the formation of sulfuric acid and ferrous and ferric sulfate which may affect the quality of groundwater and surface water. In the Northwest, where inorganic sulfur compounds are not generally present, alkaline compounds may be present in large enough quantities to increase the salinity in aquifers.

In the accompanying flowsheet the two alternative coal inputs to the coal-cleaning plant are from the Appalachian and the Northwestern regions. In the text, values for Northwestern coal follow [in brackets] the stated values for Appalachian coal.

The efficiency of extraction for both the Appalachian[1] and the Northwestern[24] surface-mined coal is 80%. Back-calculating from the raw coal requirement, which is 3.5×10^6 Te [4.2×10^6 Te] and dividing by .80 yields an annual requirement of 4.4×10^6 Te [5.2×10^6 Te] of in-ground coal.

Using the value of 15 tons [7 tons] overburden removed per ton of coal mined[23], open pit mining of the required 3.5×10^6 Te [4.2×10^6 Te] of raw coal requires the removal of 5.2×10^7 Te [2.9×10^7 Te] of overburden. A large portion of the overburden is returned to the pit. For example, between 1930 and 1971* an average of 80% of the area used for disposal of overburden and other wastes from surface mining in the U.S. was reclaimed. The yearly, nationwide average has been increasing, and in recent years has included reclamation from previously mined waste piles.

If it is assumed that 20% of the extracted overburden remains in waste piles, 1.0×10^7 Te [5.8×10^6 Te] of solid wastes are produced each year.

To determine the land area consumed by surface mining, a value of 700 acres [36 acres] of land per 10^6 tons mined was used**. Approximately three times the mined surface[24] including 10% for the construction of access and haulage roads[1] is disturbed by mining. The total affected area, scaled to the present model, is 8.0×10^3 acres [520 acres].

Additional damage to the land is caused by erosion from runoff as well as by ancillary processing units, such as acid-neutralization plants.

According to measurements at a Kentucky strip mine[5], surface-water runoff carries 1900 tons of suspended solids per year per square mile of disturbed area. Using the above value of 8.0×10^3 acres, and assuming

---

* Calculated from data on page 16 of Reference (34).

** Calculated from data on the number of mined tons/disrupted square miles in Reference (24), pp. 885, 1006-1012. A national average of 335 acres/10^6 tons mined was calculated from (24), p. 194. These values pertain only to the mine site.

that drainage and erosion continue at the same rate for 10 years, the yearly quantity of solids in the drainage water from surface mining is 2.2×10^5 tonnes. Similarly, for dissolved solids the same study reports an annual value of 1250 tons per square mile of distrubed area, which yields 1.4×10^5 Te/yr of dissolved solids attributable to the surface mining of Appalachian coal. Corresponding data for Northwestern coal mining are not available. However, a rough estimate can be made by assuming that the rate of flow per surface area of dissolved solids and suspended solids, in a given region, is directly proportional to the annual precipitation in that region. Since the annual precipitation in Montana and Wyoming is about 27% that of the Appalachian region*, the estimated yearly quantities of suspended solids and dissolved solids in the effluents from Northwestern coal mines are, respectively, $0.27 \times [1.4 \times 10^4$ Te) or 4×10^3 Te, and $0.27 \times [9.2 \times 10^3$ Te] or 2.6×10^3 Te.

The leaching and drainage of acid from waste piles associated with Appalachian surface mines has been reported as 198 lb. per acre per day[6]. Using this value and the previously calculated value for waste storage of 50,000 Te/acre, yields an annual drainage of 6.6×10^{-4} Te acid per Te of solid waste. Using the previously estimated figure of 1.0×10^7 Te per year of solid wastes, the annual acidic drainage from the mining of Appalachian coal is 6.6×10^4 Te, assuming a 10-year drainage period. The value of 10 years is conservative. There are many significant sources of

---

* Calculated from data in "The 1972 World Almanac and Book of Facts," Newspaper Enterprises Association, New York, N. Y., p. 252.

pollution from old, abandoned mines, and it has been suggested that an effective period of acid drainage from untreated mines could be as long as 800-3000 years[27].

The coal in the Northwest does not generally contain much pyritic (inorganic) sulfur, which, upon exposure to water and oxidants reacts to form sulfuric acid. Drainage water from these mines, however, may have a high alkaline content. The water-monitoring measurements near a Western mine show a sodium concentration 16 times the normal[27].

3.4 Cleaning and Preparation of Raw Coal

In 1972, 46.3% of the coal produced in the U.S. and 50%* of the coal produced in Appalachia was mechanically cleaned[11]. Cleaning processes are utilized principally on coals containing inorganic sulfur and involve techniques for physically separating the constituents of coal in order to remove inorganic impurities. The impurities removed include shale, clay, ash, rock and pyritic sulfur. The removal of sulfur can be fairly effective so that, for example, medium-sulfur, Eastern coal (1% - 2% sulfur) can be reduced to 1% sulfur[26]. The processed coal will weigh less and, therefore, will have a higher heating content. The disadvantages of the method include the loss of some usable coal; emissions of fine particulates, NO_x and SO_x from thermal dryers; and the resulting waste piles which consume land and affect water quality in a manner similar to that described for mining. New techniques are currently being developed for the utilization, in the manufacture

* Computed from data on page 375, Reference (11).

of construction materials[29], of sulfur and ash pellets produced from the waste piles. Research is also being pursued in the technology of chemical desulfurization, in which organic as well as pyritic sulfur is removed.

A description of a modern mine-site, mechanical, coal-cleaning facility which prepares coal for shipment to an electric utility, is given by Manwaring[12]. In the accompanying flowsheet 50% of the Appalachian coal is processed in a mine-site mechanical cleaning plant having an efficiency of 73%*. Of the 3.5×10^6 Te of Appalachian coal mined, 1.76×10^6 Te is processed in the facility, yielding 1.28×10^6 Te of cleaned coal. The sum of the cleaned coal, 1.28×10^6 Te and the non-cleaned coal, 1.76×10^6 Te is 3.04×10^6 Te per year. This amount of coal is transported to the power plant. It is assumed that there are no wastes due to the sizing and crushing operations performed on the coal which bypasses the mechanical-cleaning stage.

The water required by the coal-cleaning facility is 1500 gallons - 2500 gallons per ton of coal processed[38]. This requirement is met by recirculating water and by makeup water. The makeup water supplies the losses which result from the discharge of "black water," and the evaporation of water from the thermal dryers.

The percentage of required water which is recirculated, and the percentage of makeup water which is discharged in the mechanical cleaning of coal from major Appalachian coal-producing states are given in Table 3.3.

---

* Calculated from data presented in Reference (11), p. 202. For the more important coal-producing Appalachian states, the average efficiencies range from 69 to 76 percent.

TABLE 3.3

Water Usage in Coal-Cleaning Plants in Appalachian States*

Required Water	Recirculated Water	Discharged Water (Black water)
125,109 x 10^6 gal	102,594 x 10^6 gal	18,265 x 10^6 gal
	82% of required water	14.5% of required water

The value of 1500 gallons (or 5.66 Te) of water per ton of processed coal is used in the present model. Since 1.76 x 10^6 Te of coal are processed yearly in the present model, 10.96 x 10^6 Te of water are required per year in the cleaning plant. According to Table 7.3, 82.0% of this value, or 8.99 x 10^6 Te of water per year are recirculated, and 18%, or 1.97 x 10^6 Te of water per year must be supplied as makeup water. The black water comprises 14.5% of the required water or 1.59 x 10^6 Te/yr.

The black water contains 4 to 5% coal solids[9]. Using the value of 4.5% and scaling to the present model yields 7.1 x 10^4 Te of solids in the annual flow of water discharged from the cleaning plant.

The quantity of wastes resulting from the cleaning process, 4.8 x 10^5 Te, is simply the difference between the weight of the processed raw coal, 1.76 x 10^6 Te and the weight of the cleaned coal, 1.28 x 10^6 Te. The

* Calculated from data in reference (39), for the following states: Alabama, Kentucky, Ohio, Pennsylvania, Virginia, West Virginia.

weight of the solid wastes, 4.1×10^5 Te, is calculated as the difference between that of the total wastes and the weight of the solids contained in the black water. In the case of strip-mined coal, these wastes may be returned to the mining site. Cleaning wastes from deep-mined coal are generally stored in surface piles. Assuming that all wastes are stored in surface piles, 8 acres of land per year are required. This value is based upon a surface density of 50,000 Te/acre.

The concentration of suspended solids in mine-spoilbank runoff has been reported as 27,000 tons per square mile per year[5]. Assuming that the mine spoils are similar to coal cleaning refuse, and that the drainage occurs for 10 years, 3060 Te/yr of suspended solids are attributable to coal cleaning waste drainage associated with the coal for the reference 1000 Mw(e) power plant. Spoilbank runoff carries a dissolved solids load of 14,000 tons per square mile per year[5], which leads to an estimate of 1590 Te/yr of dissolved solids in runoff from coal cleaning wastes (assuming a 10 year drainage period).

On the basis of 198 lb. acid per acre per day for acid drainage from refuse piles at coal mine-sites[6] the 8-acre refuse pile yields 3×10^3 Te/yr of acid for an assumed 10-year drainage period.

Airborne particulates, of unknown quantity, result from the combustion of coal in thermal drying, from wind suspension of mine-site waste piles, and from occasional spontaneous combustion of the piles themselves.

Uncontrolled airborne emissions of particulates from thermal dryers used in cleaning are listed as 20 lb/ton of processed coal[13]. In 1972 21% of the mechanically cleaned coal in the Appalachian region was subject to thermal drying*. Applying the emission factor to this percentage of the cleaned coal in the model, 3.0×10^3 Te of particulates are released. Assuming a representative — not an ultimate — collection efficiency of 90% from a scrubber system, 300 Te per year of airborne particulates are released in the coal cleaning process.

In general, Northwestern coal is not processed at mechanical coal-cleaning plants, largely because it contains organic sulfur (rather than inorganic sulfur) which is not susceptible of removal by physical methods. It is assumed here that wastes and effluents from breaking and sizing operations are negligible.

3.5 Transport to Power Plant

Approximately 70% of the U.S. coal produced in 1970 was moved by rail. The remainder was moved on waterways, particularly rivers and canals. These percentages are stated on the flowsheet for Appalachian coal. Of the coal hauled as rail freight, about 18% was moved jointly on water carriers[23]. Movements of Northwestern coal were almost entirely by rail.

The land requirement for coal-hauling railroads in the Appalachian [Montana-Wyoming] region was computed by calculating the land needed by railroads in the ICC Eastern district [west of the Mississippi]. There are 5.4×10^4

---

* Calculated from data in reference (11), p. 375.

miles [1.19 x 10^5 miles][31] of rails. In 1971, coal accounted for 43% [9%][32] of the rail freight, by weight. Assuming that the right of way is 100 ft. wide, the transportation by rail requires 2.8 x 10^5 acres in the Eastern district [1.3 x 10^5 acres west of the Mississippi]. Since annual coal production in Appalachia of 4.24 x 10^8 Te represents 85% of production in the ICC Eastern district [10 x 10^6 Te in Montana-Wyoming represents 24% of western production[33]] and 0.7% [30%] of this production is utilized in the present model, the land requirement is .007 x .85 x (28 x 10^4 acres) = 1700 acres for the Appalachia region, and .3 x .24 x (13 x 10^4 acres) = 9000 acres in the Northwest.

An estimated .1% of the total tonnage shipped by rail is lost by spillage in loading, unloading and transit[9]. The same percentage is assumed for water carriers. The material loss due to transportation is, therefore, 3000 Te/yr [4000 Te/yr] of coal.

The emissions to the air from diesel engines, water carriers, handling, and shipment are not quantified here.

The character of the transportation of coal in the Northwest is still evolving. Railroad transportation has been the dominant mode. A small percentage of coal mined in the Northwest is transported by truck.

Coal-slurry pipelining is an important alternative to rail shipments for the future development of coal reserves in the Northwest. In slurry pipelining a finely ground mixture of approximately equal parts of coal and

water is pumped through a large-diameter underground pipe. The processing at the mining site involves the preparation of the slurry. Pumping stations are located as required along the pipeline route. Although the construction of several slurry pipeline systems is now being considered, only one such system is now operating in the U.S. The pipeline is 280 miles long and carries coal from the Black Mesa strip mine in southern Arizona to a large power plant near Bullhead City, Nevada. For the Black Mesa coal slurry pipeline, the water requirement is 15% of that for the power plant. A portion of the slurry water is utilized as makeup water for the cooling system of the power plant.

EHV — extra high voltage transmission — also promises to be used more extensively in the future replacing long distance rail hauls in the West. It is feasible only when location of a generating plant near the mine site is practical. Like the slurry pipeline, its economic advantage increases as the tonnage increases. Current research on superconducting lines is aimed at decreasing transmission losses.

3.6 Coal Storage at Power Plant

An on-site coal storage capacity for 90 days of power plant operation is assumed, corresponding to about 40 acres piled to a depth of 40 feet for a 3000 Mw(e) power plant or 13 acres for a 1000 Mw(e) plant[15]. The aqueous runoff from the storage piles contains dissolved and suspended coal particles. An unknown quantity of coal fines will become airborne

due to wind. In cold climates, the spraying of coal with oil and saline solution to prevent freezing during transportation adds to the liquid wastes from storage pile drainage.

3.7 Power Plant Operation

The present discussion is based upon a 1000 Mw(e) pulverized fuel coal boiler operating at 100% capacity factor. For a heating value of 12000 Btu/lb, typical of Appalachian coal, the annual coal consumption is 3.0×10^6 Te. For a heating value of 8500 Btu/lb, typical of Northwestern coal, the required coal supply is 4.2×10^6 Te. The input energy is 2.3×10^{10} kwhr. Table 3.4 shows the thermal balance for a typical 1000 Mw(e) coal burning power plant.

TABLE 3.4

Thermal Energy Balance for Coal-Fired Power Plant - 1000 Mw(e)

	Percent of thermal input[18]	Energy/yr at 100% capacity factor, kwh/yr
Net electrical output	38	8.76×10^9
Heat rejected to condenser	48	11.07×10^9
Sensible heat in flue gas	10	2.30×10^9
Internal thermal losses and plant consumption	4	0.92×10^9

3.8 Flue Gas Effluents

The gaseous effluents are listed in Table 3.5, along with the emission of particulates. It is assumed that 80% of the ash appears as suspended particles of fly ash in the flue gas leaving the boiler, and the remaining 20% appears as furnace-bottom ash[10].

The values for SO_x emissions could be reduced in the future either by new combustion techniques or by stack-gas cleanup methods. It is estimated that by 1975 5% of coal-fired electric generating capacity will be equipped with flue gas desulfurization processes having removal efficiencies between 75 and 90 percent*. The majority of these processes will be scrubber systems with throw-away products. Use of such air pollution control systems will create additional solid wastes. This environmental problem is further discussed in Chapter 8.

---

* Based upon a letter of January, 1973 from S. M. Greenfield, then EPA Assistant Administrator for Research and Development, published in page 162 of reference (26).

TABLE 3.5

Uncontrolled Emissions of Gases and Particulates from Coal-Fired Power Plant - 1000 Mw(e)

	Emission factor† lb/ton coal burned	Effluents, Te/yr Appalachian	Effluents, Te/yr Northwest
Sulfur oxides	38 * S	11×10^4	5.2×10^4
CO	1	1.5×10^3	2×10^3
Nitrogen oxides	18	2.7×10^4	3.8×10^4
Hydrocarbons	0.3	400	600
Aldehydes	.005	7	11
Particulates	16 * A	2.9×10^5	2.3×10^5

† Values from page 1.1-3, reference (13) for a large pulverized-fuel furnace (greater than 10^8 Btu/hr). Values listed are for bituminous coal. They are assumed to be applicable to N.W. subbituminous coal. S = % of weight of sulfur (2% East, .65% N.W.). A = % ash (12% East, 6.8% N.W.).

3.9 Fly Ash Removal

Using the emission factors in Table 3.5, the annual uncontrolled release of particulates from the boiler would be 2.9×10^5 Te [2.3×10^5 Te]. The same figures are obtained if one assumes that 80% of the ash content of the coal becomes fly ash. Ten percent* of the entering particles, or 2.9×10^4 Te/yr [2.3×10^4 Te/yr] are emitted from the stack, leaving a residue of fly ash weighing 2.6×10^5 Te/yr [2.1×10^5 Te/yr]. Fly ash removal systems generally remove precipitated particulates in liquid slurries but ultimately the residue ends up in solid form as indicated in the flowsheet. An undetermined quantity of fine particles are emitted due to the inadequacy of current control technology.

Data on radioactivity in coal ash are shown in Table 3.6, along with the radioactive emissions for our current model in which 2.9×10^4 Te [2.3×10^4 Te] of ash are emitted from the stack. The thorium-decay daughters ^{228}Ra and ^{228}Th are assumed to be in secular equilibrium with ^{232}Th in the ash, and secular equilibrium of the uranium-decay daughters ^{230}Th and ^{226}Ra is assumed. It is assumed that these radionuclides form stable oxides upon combustion and are carried by the ash, i.e., the radioactivity per unit of ash remains constant.

---

* While technology exists for 99.5% removal-by-weight of particulates from flue gases, and is currently employed in some instances[37], the typical efficiencies today are actually much lower[13].

TABLE 3.6

Radium and Thorium Radionuclides Released
from Coal-Fired Power Plant Stack - 1000 Mw(e)

	Content in Coal Ash pico curies/gm ash*		Quantities released with discharged fly ash Curies/yr	
	Appalachian	Wyoming	Appalachian	Wyoming
$^{230}Th + {}^{226}Ra$	1.6		.046	
$^{232}Th + {}^{228}Ra + {}^{228}Th$	2.7	1.3	.078	.030

3.10 Ash Storage

A total of 3.3×10^5 [2.7×10^5] Te of ash is added to on-site storage each year. A 3000 Mw(t) power plant operating for 35 years at 50% average capacity factor requires 300 to 400 acres for ash storage if piled to an average depth of 25 feet[15]. Scaling to a 1000 Mw(e) plant at 100% capacity factor yields a land requirement for ash storage of 17 to 23 acres per year.

An unknown quantity of liquid wastes are produced from surface runoff, and an unknown quantity of ash dust is produced from the ash storage piles.

Based on the ash analysis presented in Table 3.6, the annual quantities of radioactive radium and thorium in the stored ash are shown in Table 3.7.

---

* Data is from page 777, reference (21). The Appalachian sampling is from Widow's Creek, TVA One picocurie = 10^{-12} curies.

TABLE 3.7

Radium and Thorium Radionuclides in Stored Ash - 1000 Mw(e)

	$^{230}Th + {}^{226}Ra$ curies/yr	$^{232}Th + {}^{228}Ra + {}^{228}Th$ curies/yr	
	Appalachian	Appalachian	Wyoming
Bottom Ash	.12	.20	.074
Precipitated Fly Ash	.42	.71	.27
Total in Stored Ash	.53	.90	.34

In 1972, 7%[35] of the subbituminous fly ash collected was utilized, mainly as partial replacement of cement in concrete and as a stabilizer for surfaces such as road beds. None of the bottom ash has been utilized.

3.11 Liquid Wastes

Liquid wastes from a power plant are primarily due to boiler blowdown which contains chemicals added for corrosion and organic growth control. The emission rates for the various pollutants in liquid wastes and the calculated releases for a 1000 Mw(e) power plant are listed in Table 3.8.

TABLE 3.8

Boiler Blowdown Releases in Liquid Wastes - 1000 Mw(e)

Component	Releases[19] lb/day	Releases Te/yr
Suspended solids	3,000	497
Non-degradable organics	400	66.2
BOD	15	2.4
Acids	500	82.5
Alkalinity	63	10.4
Chlorine	160	26.3
Phosphates	250	41.7
Boron	2,000	331
Chromates	15	2.4

3.12 Condenser Cooling

It is assumed that the condenser cooling for the 1000 Mw(e) coal fired power plant is provided entirely by evaporative cooling towers. The characteristics of the towers, summarized in Table 3.9, are scaled on the basis of the amount of heat rejected by the condenser from the parameters presented in Section 15.2. Additional environmental effluents associated with cooling tower operation are discussed in Section 15.2.

TABLE 3.9

Cooling Tower Quantities for Coal-Fired Power Plant - 1000 Mw(e)

Thermal load	11.07×10^9 kwh/yr
Circulating coolant	574,000 gal/min
Blowdown discharge rate	4290 gal/min
Dissolved solids released in blowdown	4270 Te/yr
Make-up water rate	11,430 gal/min
Drift rate	287 gal/min
Dissolved solids released in drift	286 Te/yr
Evaporated water	1.37×10^7 Te/yr

The land area required is scaled from data presented by Parker and Krenkel[22] for natural draft towers and is about 6 acres.

REFERENCES

1. Averett, Paul, "Stripping Coal Resources in the U.S. - January 1, 1970," U.S. Geological Survey Bulletin 1322, Washington, D.C. (1970), pp. 7-8.

2. "Environmental Effects of Underground Mining and Processing," U.S. Department of Interior, an unpublished report.

3. Siehl, G. C., "Issues Related to Surface Mining," A report of the Senate Committee on Interior and Insular Affairs, Washington, D.C. (1971).

4. "Surface Mining and Our Environment," U.S. Department of Interior, Washington, D.C. (1971), p. 52.

5. "Influences of Strip Mining on the Hydrologic Environment of Parts of Beaver Creek Basin, Kentucky, 1955-66," U.S. Department of Interior, Geological Survey Paper 427-C (1970), p. C-2.

6. "Control of Mine Drainage from Coal Mine Mineral Wastes," U.S. Environmental Protection Agency, 14010 DDH (August, 1971).

7. Averett, Paul, "Coal Resources of the U.S., January, 1967," U.S. Geological Survey Bulletin No. 1275, Washington, D.C. (1969), p. 29.

8. Kaufman, Alvin, Nadler, "Water Use in the Mineral Industry," U.S. Department of Interior, Bureau of Mines Information Circular 8285 (1966), p. 36.

9. Delson, J. K. and R. J. Frankel, "Residuals Management in the Coal-Energy Industry," Resources for the Future, Inc., Washington, D.C. (1974).

10. Fortune, M., "Environmental Consequences of Extracting Coal-Underground Mining," Electric Power and Human Welfare, AAAS/CEA group preliminary report (August 1972), pp. 1-50.

11. "Minerals Yearbook - 1972," Vol. I, U.S. Department of Interior (1972).

12. Manwaring, L. G., "Coarse Coal Cleaning at Monterey No. 1 Preparation Plant," Mining Congress Journal, 58:3 (March, 1972), pp. 43-48.

13. "Compilation of Air Pollutant Emission Factors," U.S. Environmental Protection Agency (April, 1973).

14. "Bituminous Coal Facts - 1970," National Coal Association, Washington, D.C. (1970).

15. "Considerations Affecting Steam Power Plant Site Selection," Energy Policy Staff, Office of Science and Technology (December, 1968).

16. Cuffe, S. T. and R. W. Gerstle, "Emissions from Coal-Fired Power Plants: A Comprehensive Summary," U.S. Department of Health, Education and Welfare, PHS Pub. No. 999-AP-35 (1967).

17. "Fly Ash/Sulfur Removal Systems are Slated for Two Plants," Electrical World, 176, 33 (September 1, 1971).

18. Eliassen, R., "Power Generation and the Environment," Bulletin of Atomic Scientists, 27:7 (September, 1971).

19. Aynsley, E. and M. R. Jackson, "Industrial Waste Studies: Steam Generating Plants," Environmental Protection Agency, Water Quality Office (1971).

20. Esso Research and Engineering Co., "Systems Study of NO Control Methods for Stationary Sources, Final Report," Vol. II, Report GR-2-NOS-69.

21. Martin, J. E., E. D. Harwood, D. T. Oakley, "Comparison of Radioactivity from Fossil Fuel and Nuclear Power Plants," in Environmental Effects of Producing Electric Power, JCAE hearings, 91st Congress, Part I (1969), p. 777.

22. Parker, F. L. and P. A. Krenkel, "Engineering Aspects of Thermal Pollution," Vanderbilt University Press, 265 (1969).

23. National Petroleum Council, "U.S. Energy Outlook, Coal Availability" (1973).

24. "Surface Mining," Hearings of the Committee on Interior and Insular Affairs, U.S. Senate, Serial No. 92-13 (November, December, 1971).

25. Perry, H. and H. Berkson, "Must Fossil Fuels Pollute?", Technology Review (December, 1971).

26. "Coal Policy Issues," Hearings of the Committee on Interior and Insular Affairs, U.S. Senate, Serial No. 93-12 (92-47) (June, 1973).

27. "Environmental Crosscut Task Force for Project Independence Blueprint," ERCO for EPA (July 31, 1974).

28. "Mineral Facts and Problems," Bureau of Mines, Bulletin 650, U.S. Department of Interior (1970).

29. Black, "Sulfur Recovery from Coal Refuse," Water Pollution Control Research Series, for U.S. Environmental Protection Agency, 14010 FYY (September, 1971).

30. "Power Generation and Environmental Change," Symposium of Committee on Environmental Alteration of AAAS at MIT (December, 1969).

31. "Railroads, Transportation Statistics in the U.S., 1971," Bureau of Accounts, Interstate Commerce Commission (1972).

32. "Freight Commodity Statistics, Class I Railroads, Year Ended December 31, 1971," Interstate Commerce Commission, Bureau of Accounts.

33. "Mineral Industry Surveys, Coal - Bituminous and Lignite in 1971," U.S. Department of Interior, Bureau of Mines (September 1972).

34. Paone, James, "Land Utilization in the Mining Industry, 1930-1971," U.S. Department of Interior, Bureau of Mines, Information Circular 8442 (1974).

35. Manz, Oscar E., "Utilization of Lignite and Subbituminous Ash," 1973 Lignite Symposium, University of North Dakota, Grand Forks, N.D. (May, 1973).

36. "Steam-Electric Plant Air and Water Quality Control Data for Year Ended December 31, 1970," based on Federal Power Commission Form No. 67 (July, 1973).

37. Berkowitz, Squires, A.M., "Power Generation and Environmental Change," Symposium on Environmental Alternatives AAAS, MIT (1971).

38. Perry's Chemical Engineer's Handbook, 4th Edition, Perry, R. H., Chilton, C. H., Kirkpatrick, S. D., editors, McGraw-Hill, New York (1963).

39. Leonard, J. W., Mitchell, D. R., "Coal Production," 3rd Edition, AIME, New York (1968).

4. ELECTRICAL POWER FROM RESIDUAL FUEL OIL

4.1 Introduction

The fuel cycle for a 1000 Mw(e) power plant fueled with residual oil derived from domestic crude is shown in Figure 4.1. The maximum domestic environmental effects are associated with oil produced, processed and consumed within the United States; therefore other fuel sources for power plants, such as imported residual fuel oil, will not be considered here.

The flowsheet quantities for fuel cycle operations prior to the power plant are developed primarily on the basis of industry-wide data, scaled to the oil flow associated with the annual fuel supply for a 1000 Mw(e) power plant.

Residual fuel oil is a by-product of the domestic petroleum industry. The flowsheet illustrates the operations of crude production, transport, and the refining of crude into typical refinery products and crude by-products. Alternate production of domestic crude oil from continental oil fields and from off-shore fields is illustrated.

The material and environmental quantities are those resulting from the production of the required amount of residual fuel oil to fuel an oil-fired 1000 Mw(e) power plant for one year at 100% capacity factor. The environmental effluents associated with production, transportation, and refining are, therefore, only partly attributable to producing power-plant fuel.

FLOW QUANTITIES ARE STATED IN METRIC TONNES / YEAR
UNLESS OTHERWISE INDICATED

100% CAPACITY FACTOR

EVAPORATIVE COOLING TOWER FOR WASTE HEAT REJECTION

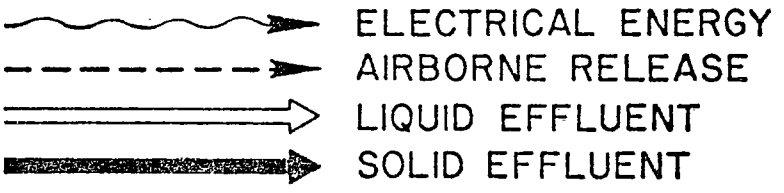

Te = METRIC TONNES
Ci = CURIES
kwh = KILOWATT-HOURS
Mw(e) = MEGAWATTS ELECTRICAL
MPC = MAXIMUM PERMISSABLE CONCENTRATION

Figure 4.1

Residual Fuel Oil Power Plant 1000 Mwe
Material And Environmental Release Flowsheet

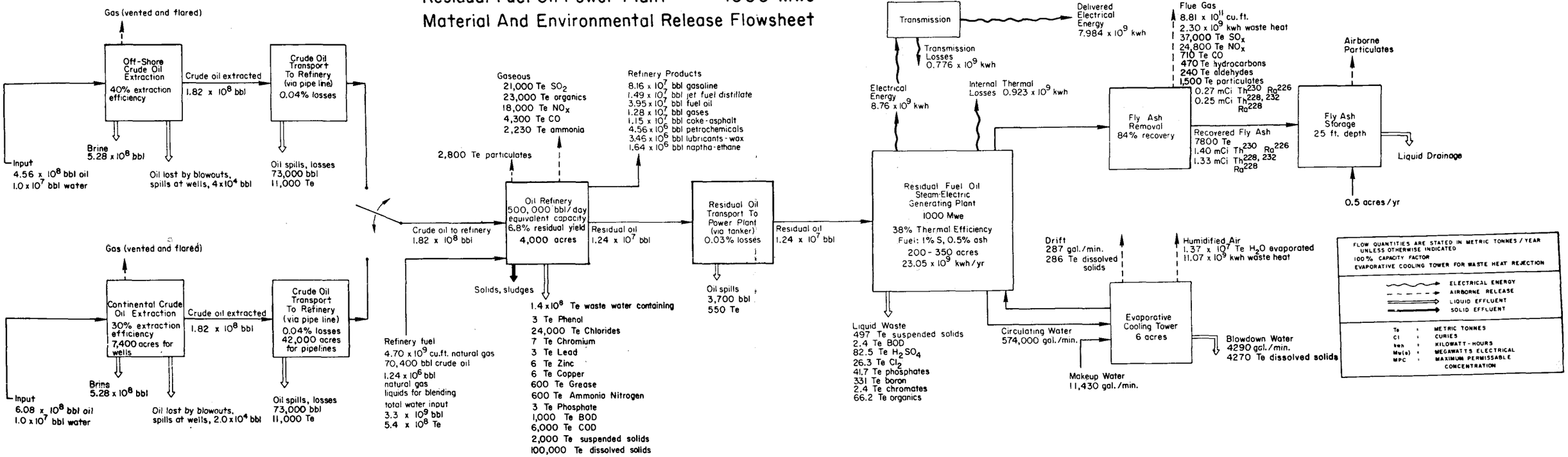

As a result of the increasing needs for low-sulfur fuel to generate electricity, the U.S. demand for residual fuel oil increased from 27 million bbl/yr to 555 million bbl/yr between 1966 and 1971[15], with a corresponding massive decline in utility use of coal. While domestic crude oil is generally low in sulfur content, averaging .6% by weight for offshore crude, and .8% for continental crude[19], only approximately 7% of domestic U.S. refinery output has been residual fuel oil[16]. At the same time there has been a virtual standstill in the growth of domestic refinery capacity (a 2% increase in 1973)[18]. The coupling of increased demand and negligible growth in refining capacity has resulted in a large dependence upon imports of residual fuel. In 1972, U.S. production of residual fuel amounted to 293×10^6 bbl while imports amounted to 592×10^6 bbl[16], mostly from Caribbean refineries. In the future a greater fraction of the crude oil used in the U.S. refineries will be from foreign sources. The sulfur content of these crudes is between 1 and 4% by weight. Hence further deployment of developing desulfurization techniques will be effected in order to produce fuels which meet sulfur-emission standards.

4.2 Crude Oil Production

A yearly production of 1.82×10^8 barrels of crude oil at the well is required to produce sufficient residual fuel oil for the 1000 Mw(e) power plant. Production of this amount from off-shore wells would result in a yearly consumption of oil-pool resources of 4.56×10^8 bbl, based on an extraction

efficiency of 40%[1]. The estimated oil extraction efficiency for on-shore or continental oil wells is 30%[1], which results in a yearly consumption of 6.08×10^8 bbl of continental resources.

On the basis of data presented by Buttermore[2], approximately 1×10^7 bbl/yr of water is required for the indicated yearly production of crude oil. Brine, or saline water, is present in underground oil pools and must be separated from the crude oil at the well site. The residue, containing small amounts of oil, must be disposed of as liquid waste. Based on 2.9 bbl of brine produced per barrel of extracted crude oil[3], 5.28×10^8 bbl/yr of brine is produced.

An estimate of the number of wells required to produce the crude oil is obtained as follows. The average yearly production per well in the U.S. for the year 1969 was 6168 bbl*, which scales to 29,600 such average wells required to produce 1.82×10^8 bbl/yr of crude oil. Assuming one quarter acre of land per continental well**, 7390 acres are required for the annual production shown in this flowsheet.

Roughly 0.02% of the oil produced from off-shore wells is lost at the well site by spills and blowouts[4]. This results in 4×10^4 bbl/yr of oil waste at the off-shore well sites. On the basis of 0.011% losses by spills, blow-outs and incomplete separation from waste water for continental production[4], an estimated 2.0×10^4 bbl per year of oil wastes are produced at the wells associated with the production quantities shown in the flowsheet. An unknown quantity of natural gas associated with oil bearing formations is vented and flared at the wells.

---

* Calculated from data presented in Reference (3), pp. 824-25.

** An estimate for the purposes of this report, including land used for oil field water separators and oil gathering mains, etc.

4.3 Transport from Wells to Refinery

The material quantities for on-shore oil transport are identical with those developed for off-shore wells, with the exception of the land area required for oil pipeline right-of-way. On an industry wide basis, an estimated 0.04% of oil transported from wells to refineries via pipeline is lost due to leaks and spills[4]; this results in a loss of approximately 73,200 bbl/yr for the transported quantities shown on the flowsheet.

In 1969 there were 46,000 miles of oil-gathering pipelines[5]. The crude oil production associated with a one year supply of residual fuel oil for the 1000 Mw(e) power plant represents 6.58% of the domestic crude oil production for 1969*. This share of the total U.S. oil-gathering pipeline mileage and an assumed 14 acres of land required per mile of pipeline, yield a land requirement of 42,000 acres. Other environmental effects associated with pipeline construction are not included in this report.

4.4 Oil Refining

As calculated from data reported for 1969 in the Minerals Yearbook[3], the residual fuel oil output of domestic oil refineries was 6.8% of the crude oil input. Based upon this product yield, refinery capacity of 500,000 bbl/day is required to supply the annual requirement of residual fuel oil to a 1000 Mw(e) power plant.

---

* Calculated from data represented in Reference (3), p. 830.

The hypothetical refinery discussed in this report is based on industry-wide data, representing contributions from the mix of existing refinery operations in the U.S. It does not represent the most modern available technology and does not necessarily represent the operation of any particular refinery. However, some of the effluent data are based on data from individual facilities when these are the only source available.

The land requirement, stated on the flowsheet, of 4000 acres, is based upon the estimate of 1500 acres for a typical refinery of 200,000 bbl/day[21]. It includes expansion potential as well as a visual greenbelt.

The model refinery shown here requires the input of additional quantities of crude oil and natural gas for refinery fuel. In 1969, for the industry as a whole, 0.0397% of the refinery crude oil input was used as refinery fuel[3]. Scaling to the flowsheet refinery input yields 7.04×10^4 bbl/yr of crude oil for refinery fuel. A similar procedure using natural-gas consumption data[3] results in the estimate of 4.70×10^9 cu.ft./yr of natural gas as fuel for the model refinery. U.S. refineries used 2.65×10^8 bbl of natural gas liquids for blending and as feed stock in various manufacturing processes in 1969[3]. On a pro-rata basis, the 500,000 bbl/day refinery would utilize 1.24×10^6 bbl/yr of natural gas liquids.

Besides the input of fuels and blending stocks, significant volumes of water are required. The values used here were taken from a report on a particular refinery of 190,000 bbl/day capacity[6]. It is expected that, with a shift

toward closed water systems, remarkable decreases in water requirements will result. By 1985, it is expected that the water consumption of the 500,000 bbl/day refinery in the flow chart will decrease from 3.3×10^9 bbl water/year to 1.8×10^8 bbl water/year[21].

The yields of important refinery products other than residual fuel are shown in Table 4.1.

Table 4.1

Refinery Products

Item	Yield in percent of crude input[3]	Annual yields for 500,000 bbl/day refinery bbl/yr
Gasoline	44.7	8.16×10^7
Jet fuel	8.2	1.49×10^7
Distillate fuel oil	21.7	3.95×10^7
Gases	7.0	1.28×10^7
Naphtha-ethane	0.9	1.64×10^6
Petrochemicals	2.5	4.56×10^6
Lubricants-wax	1.9	3.46×10^6
Coke, asphalt, road oil	6.3	1.15×10^7
Residual fuel oil	6.8	1.24×10^7
	100.0%	

Table 4.2 lists the average 1972 rate of gaseous effluents emitted from the six major oil refineries in the San Francisco Bay Area[20]. Taken together, these refineries process 595,000 bbl/day of crude oil. Corresponding numbers for the flow chart are also shown.

Due to inadequate sampling techniques, the estimate in Table 4.2 for organics, (which include hydrocarbons, organic acids, and oxygenates such as aldehydes) is subject to the most uncertainty. These compounds are highly sensitive to photochemical reactions and, therefore, are associated with smog.

An increase in the fraction of high sulfur foreign crudes which is processed in domestic refineries, coupled with a decrease in the use of natural gas as refinery fuel will tend to increase SO_x emissions. On the other hand, the greater use of advanced desulfurization techniques, which can attain a 99.8% efficiency[16], will tend to decrease the SO_x emissions. The latter effect is expected to outweigh the result of processing higher-sulfur crude and replacing natural gas with higher-sulfur fuel oil, so that SO_x emissions per barrel of crude oil processed will not tend to exceed their current values.

Besides a greater sulfur content, the foreign crudes, especially Venezuelan, contain a higher concentration of metals. The vanadium and nickel, which are present, tend to impede catalytic sulfur-removal processes by rendering the catalysts inactive.

The burning of carbon deposits for the purpose of regenerating catalysts is subject to stringent controls. CO boilers are generally used to control CO emissions. The heat generated in these CO boilers is profitably utilized in the operation of the refinery.

The emission of ammonia shown in the flow chart is based upon the estimate that 50% of refinery input goes through fluidized bed catalytic crackers, which emit ammonia at an average rate of .054 lb of ammonia per barrel of feed. Correspondingly, 2230 Te/yr of ammonia are emitted from the model refinery.

Table 4.2

Oil Refinery Gaseous Effluents

Effluent	1972 emissions from 6 refineries with crude input of 595,000 bbl/day[20] tons/day	Emissions from a 500,000 bbl/day refinery Te/yr
Particulates	10.2	2840
Organics	81.5	22,700
NO_x	63.5	17,700
SO_x	74	21,000
CO	15.5	4310

Liquid effluents from oil refineries vary considerably with each refinery. Final EPA guidelines[23] which will take effect July 1, 1977, are expected to be significantly more stringent than present regulations.

In this study the 1973 monitors of liquid effluents as reported by 6 refineries in the San Francisco Bay Area[22] were used as the basis for the values on the flowsheet. Each refinery reported only a particular subset of the list of types of liquid effluents, according to current requirements. Therefore, while the total capacity of the six refineries is 595,000 bbl/day, the capacity represented for each type of effluent is usually smaller.

The values from each refinery are normalized in Te/yr, for a model refinery of 500,000 bbl/day capacity. For each type of effluent these normalized values are then averaged over the number of reporting refineries. These averages, along with ranges of reported values, are listed in Table 4.3.

Table 4.3

Oil Refinery Liquid Effluents

Item	Refinery capacity represented bbl/day	Range of 1973 effluents adjusted for a 500,000 bbl/day refinery Te/yr	Average 1973 effluents adjusted for a 500,000 bbl/day refinery Te/yr
Waste water	487,000	0.1×10^8 - 4.0×10^8	1.4×10^8
Phenol	419,000	0.8 - 1.3	3
Chlorides	100,000	—	24,000
Chromium	487,000	2.2 - 14	7
Lead	487,000	1.4 - 10.0	3
Zinc	487,000	0.8 - 14.0	6
Grease	514,000	33 - 2100	600
Copper	400,000	0.1 9.0	6
Ammonia Nitrogen	324,000	20 - 850	600
Phosphate	114,000	1.3 5.0	3
BOD	419,000	140 - 1900	1000
COD	324,000	650 - 12,600	6500
Suspended solids	297,000	500 - 2900	2000
Dissolved solids	100,000	—	110,000

4.5 Transport of Residual Fuel Oil

Due to its high viscosity at ambient temperatures nearly all residual fuel oil from U.S. refineries is shipped by tanker or oil barge to power plants. For the purposes of this report, other modes of transport will not be considered. An estimated 0.03% of the oil shipped via tankers from refineries is lost by spills in loading and transport[4], corresponding to an annual spillage loss of 550 Te (3700 bbl) for the present flowsheet. Fuel oil consumption as tanker fuel is not considered.

4.6 Power Plant Operation

The 1000 Mw(e) power plant is assumed to have an overall thermal efficiency of 38% and a 100% capacity factor. The overall energy budget is assumed to be the same as for the coal-fired plant (cf. Table 3.1). The thermal energy available from combustion of residual fuel oil used as the basis for calculations in this report is 6.36×10^6 Btu/bbl[8]. Low-sulfur residual fuel oil containing 1% sulfur[11] is assumed, with an ash content of 0.5%[12]. An estimated 200-350 acres of land are required for a 1000 Mw(e) oil fired power plant[13]; this is considerably less than that required for a coal-fired plant because of the smaller area required for ash and fuel storage.

Liquid wastes associated with boiler feedwater treatment and blowdown are also assumed to be identical to those shown in Table 3.7 for the coal-fired power plant.

4.7 Flue Gas Effluents

On the basis of 215 cu. ft. of flue gas per pound of residual fuel oil burned[11], the annual quantity of flue gas produced by the 1000 Mw(e) power plant is 8.81×10^{11} cu. ft. Assuming that all of the ash appears as fly ash upon combustion, 9300 Te of fly ash is released annually to the flue gas system. A fly-ash removal efficiency of 84% for an oil-fired power plant is assumed[12], resulting in an annual particulate release to the environment of 1500 Te.

The yearly quantities of gaseous effluents are given in Table 4.5.

Table 4.4

Gaseous Effluents from Oil Fired Power Plant - 1000 Mw(e)

Pollutant	Emission factors lb/10^3 gal oil consumed[8]	Yearly emissions Te/yr
SO_x	157 (for 1% sulfur oil)	37,000
CO	3	705
Hydrocarbons	2	472
NO_x	105	24,800
Aldehydes	1	236

Radium and thorium radionuclides exist in residual fuel oil ash in measurable quantities[12]. Concentrations reported for these radionuclides in oil ash, corrected by the assumption that ^{226}Ra is in secular equilibrium with ^{230}Th and that ^{232}Th, ^{228}Ra and ^{228}Th are also in secular equilibrium, are listed in Table 4.6.

Table 4.5

Radium and Thorium Radionuclides in Residual Fuel Oil Ash

	$^{230}Th + {}^{226}Ra$	$^{232}Th + {}^{228}Ra + {}^{228}Th$
Concentration in oil ash[12]	0.18 picocuries*/gm dry ash	0.17 picocuries*/gm dry ash
Total amount in annual fuel supply for 1000 Mw(e) power plant	1.67 millicuries/yr	1.58 millicuries/yr
Annual releases from power plant stack	0.27 millicuries/yr	0.25 millicuries/yr
Annual quantity collected in fly ash precipitate	1.40 millicuries/yr	1.33 millicuries/yr

* Picocurie = 10^{-12} curies

4.8 Fly Ash Storage

Of the 9300 Te of fly ash produced annually in the power plant, approximately 7800 Te is recovered in the gas cleaning system and must be stored at the power plant site or disposed of in some other fashion. An estimated annual land area requirement for dry surface pile storage can be made by scaling from the approximately 23 acres/yr required for the storage of the 3.3×10^5 Te per year of ash recovered from the coal-fired power plant. This results in an annual land requirement of about 0.5 acres. If landfill methods of storage

and disposal were used, considerably more land area would be necessary, but alternate use of the land would be possible after the filling operations were completed. If uncovered surface storage is used, an undetermined quantity of airborne particulates will be produced by wind action. Liquid wastes are produced by the use of water slurries to transport fly ash from stack cleaning to storage sites. Additional, but unknown quantities are produced by drainage from stored piles and land fill sites.

4.9 Condenser Cooling

Condenser cooling for the 1000 Mw(e) residual-oil-fired power plant is assumed to be provided entirely by evaporative cooling towers. The cooling tower quantities are calculated by scaling from the parameters developed in Section 6.2 on the basis of heat rejected by the condenser. The quantities are identical to those for the 1000 Mw(e) bituminous coal power plant summarized in Section 6.2.

REFERENCES

1. "An Initial Appraisal by the Oil Supply Task Group 1971-1985," National Petroleum Council, Washington, D.C., p. 45 (1972).

2. Buttermore, P. M., "Water Use in the Petroleum and Natural Gas Industries," Washington, D.C., p. 32 (1966).

3. "Minerals Yearbook - 1969," Vols. I-II, United States Department of Interior.

4. "Draft Environmental Statement for Proposed Outer Continental Shelf Oil and Gas General Lease Sale - Off-Shore Eastern Louisiana," United States Department of Interior, Washington, D.C. (1972).

5. "American Almanac for 1972," p. 550.

6. "Air Pollution in the San Francisco Bay Area," Stanford Air Pollution Workshop, Final Report, p. 73 (1970).

7. Nemerow, N. L., "Liquid Waste of Industry; Theories, Practices and Treatment," Addison-Wesley, p. 436 (1971).

8. Compilation of Air Pollutant Emission Factors, United States Environmental Protection Agency, pp. 1.3-1, 1.3-2 (April, 1972).

9. "San Francisco Bay Area Water Conservation District Limits," reported for a 190,000 bbl/day refinery in San Francisco Chronicle, September 27, 1972.

10. 1967 Domestic Refinery Effluent Profile, American Petroleum Institute, Committee for Air and Water Conservation; Washington, D.C. (September, 1968)

11. Smith, W. S., "Atmospheric Emissions from Fuel Oil Combustion," U.S. Public Health Service, Environmental Health Series, Air Pollution No. 999-AP-2, p. 5 (1966).

12. Martin, J. E., E. D. Harward, D. T. Oakley, "Comparison of Radioactivity from Fossil Fuel and Nuclear Power Plants," Department of Health, Education and Welfare, p. 3 (November, 1969).

13. "Considerations Affecting Steam Power Plant Site Selection," Office of Science and Technology, Energy Policy Staff, p. 11 (December, 1968).

14. Williams, R. H., Private Communication (The Energy Policy Project) (January, 1973).

15. Hearings before Committee on Interior and Insular Affairs, U.S. Senate, Serial No. 93-12(92-47), p. 79 (June, 1973).

16. Oil and Gas Journal, Vol. 72, No. 13, p. 73 (April 1, 1974).

17. Environmental Science and Technology, p. 494 (June, 1973).

18. Worldwide Directory 1973-1974, Oil and Gas Journal, Tulsa, Oklahoma.

19. Oil and Gas Journal, Vol. 70, No. 4, Petroleum Publishing Co., Tulsa, Oklahoma (January 24, 1972).

20. "Source Inventory of Emissions in the San Francisco Bay Area," Bay Area Air Pollution Control District, San Francisco, California (1972).

21. Draft Environmental Impact Statement on Refinery Development, for Federal Energy Administration (September 17, 1974).

22. Monitoring reports for 1973, collected by the State of California Regional Water Quality Control Board, San Francisco Bay Region.

23. Federal Register, p. 16560 ff. (May 9, 1974).

5. ELECTRICAL POWER FROM NATURAL GAS

5.1 Introduction

The fuel cycle flowsheet shown in Figure 5.1 for a 1000 Mw(e) power plant is based upon processed natural gas produced from continental domestic wells. Other supply schemes such as gas from offshore areas or gas from oil-producing wells are also used by various electrical generating plants but are not considered here. The flowsheet quantities for production, processing, and transport of natural gas fuel are developed primarily on the basis of industry-wide data, scaled to the gas volume required for a 1000 Mw(e) power plant.

5.2 Gas Production

A yearly production of 8.71×10^{10} cu. ft. of natural gas is required to furnish the annual fuel supply for the 1000 Mw(e) power plant. However, based on industry-wide data, the actual volume of natural gas extracted is about 10 percent greater. The excess volume is returned to the gas bearing formation to stimulate flow and enhance production. Assuming an 80% extraction efficiency for gas wells*, the net annual consumption of gas-field resource is 10.9×10^{10} cu. ft.

In 1969, there were about 114,500 gas wells in production in the U.S. producing some 20.7×10^{12} cu. ft. of gas, for an average of 1.81×10^{8} cu. ft. of gas produced per well**. On this basis, the annual production of about 480 "average" wells is required to supply the 1000 Mw(e) power plant. Based

---

* General industry-wide estimate based on private communications with industry source.

** Calculated from data presented in the 1969 Minerals Yearbook[1].

FLOW QUANTITIES ARE STATED IN METRIC TONNES / YEAR UNLESS OTHERWISE INDICATED

100% CAPACITY FACTOR

EVAPORATIVE COOLING TOWER FOR WASTE HEAT REJECTION

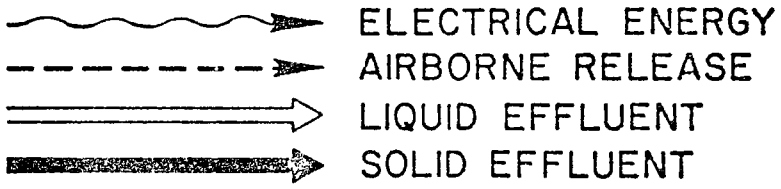

Te	=	METRIC TONNES
Ci	=	CURIES
kwh	=	KILOWATT-HOURS
Mw(e)	=	MEGAWATTS ELECTRICAL
MPC	=	MAXIMUM PERMISSABLE CONCENTRATION

Figure 5.1

Natural Gas Power Plant 1000 Mwe
Material And Environmental Release Flowsheet

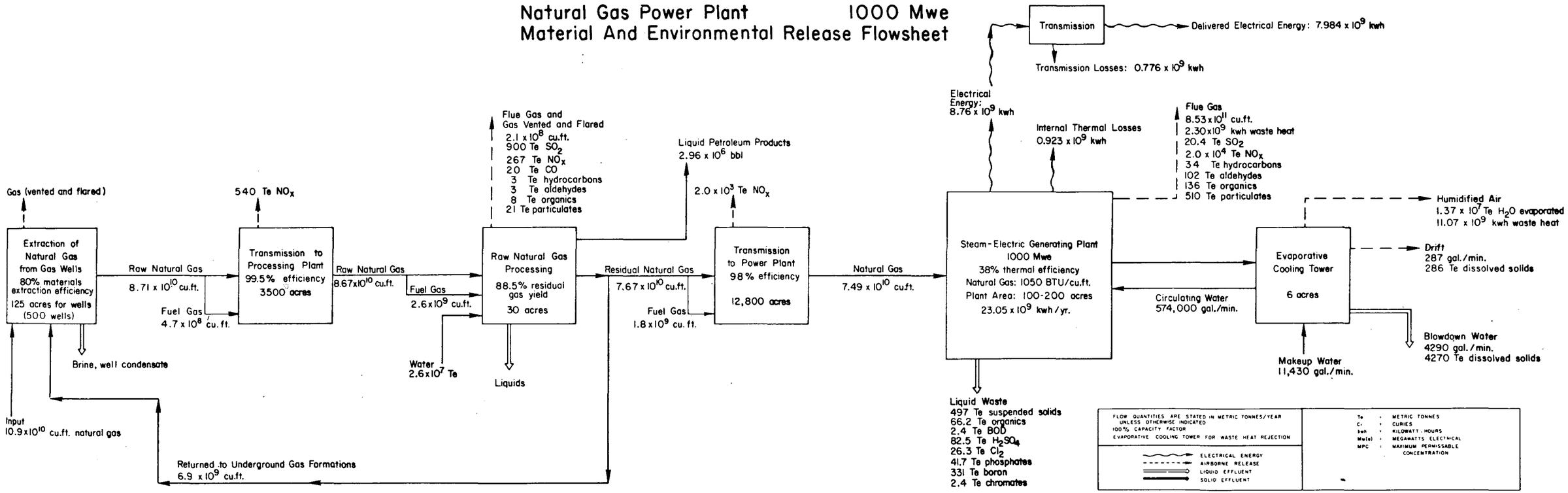

on one quarter acre of land per well*, 125 acres are required, assuming that the wells produce continually during the power plant operating life and neglecting additional requirements for exploration and drilling activities associated with this amount of production.

Quantities of salt water and condensed hydrocarbons are separated from the gas at the well head of high-pressure gas wells; however, no quantitative estimates are available.

In the processes of drilling and proving gas wells, gas is lost at the well head by venting and flaring, and by leaks and accidents. The practice of venting is being curtailed by the industry. Quantitative estimates of effluents are presently not available.

Unknown quantities of pollutants are emitted by power equipment used to drive pumps at gas wells.

5.3 Transmission of Raw Gas to Processing Plant

An estimate of the land area required for field-gathering mains and transmission pipe is obtained as follows. The 1969 Minerals Yearbook reported the total mileage of gas-field-gathering mains as 64,400 miles[1]. The calculated share of the marketed gas production represented by the fuel supply for the 1000 Mw(e) power plant is 0.39%. Scaling the total field-gathering pipeline mileage to this fraction yields 250 miles of pipeline

---

* An assumption for the purposes of this paper which includes land for well structures and associated equipment.

required for the gas for the present flowsheet. On the assumption that the land required for gas transmission pipelines is 14 acres per mile and that a 10-acre pumping station is required for every 75 miles of pipeline[2], 3,500 acres are required for transmission. Pipeline right of way is generally available for other limited beneficial uses after construction.

In the transmission of natural gas a certain fraction of the gas is consumed in fueling compression stations, both in the transmission to the processing plant (gathering) and at the later stage of transmission between the processing and power plants. Of the 7.49×10^{10} cu. ft. of natural gas delivered annually to the power plant, 3% is consumed as fuel in the two stages of transmission[3]; hence the total natural gas used as fuel is 2.3×10^{9} cu. ft. Of this total fuel gas, 21%[14][1] is used in the first stage, so that 4.7×10^{8} cu. ft. per year is consumed in transmission to the processing plant. This value represents 0.5% of the raw natural gas leaving the well-head.

The annual quantity of NO_x emitted during transmission to the processing plant, 540 Te, is the product of the fuel gas used, 4.7×10^{8} cu. ft., and the emission factor for gaseous-fueled stationary internal combustion engines, 2500 lb/10^{6} cu. ft.* Turbine-driven compression units, which are used to a limited extent for gas transmission, have lower NO_x emission rates.

---

* This emission factor is based upon a unit of 5000 h.p.[5], operating at $.0375 \times 10^{6}$ cu. ft. per hour[5], and read from the graph of nitrogen oxides emissions from stationary internal combustion engines, on page 3.3.2-2 of Reference (6).

5.4 Raw Gas Processing

Of the raw gas leaving the well-head, 99.5% or 8.67×10^{10} cu. ft./yr arrives at the processing plant. On an industry-wide basis in 1972, the efficiency of raw natural gas processing was 88.5%*, leaving 7.67×10^{10} cu. ft./yr of fuel transmitted to the power plant in the present flowsheet.

The land requirement for a modern gas processing plant is approximately 30 acres[7].

Water requirements for natural gas processing in 1962 were 8.425×10^{11} gal. of water[8] to process 11.089×10^{12} cu. ft. of raw natural gas[9]. The processing of 8.67×10^{10} cu. ft./yr of raw gas would then require 2.6×10^{7} Te/yr of water, a large portion of which is reusable.

On an industry-wide basis in 1972, 2.95% of the raw gas input to gas processing plants was used to fuel the processing operations*. Based on this figure, 2.6×10^{9} cu. ft. of gas fuel is required for processing the annual amount of 8.67×10^{10} cu. ft. of raw gas. It is assumed that this requisite quantity of gas fuel is used to run industrial process boilers, for which the emission factors and corresponding emissions are shown in Table 5.1. If gaseous-fueled engines were to be used in place of process boilers then the emission factors would be greater.

---

* Calculated from data presented in the 1972 Minerals Yearbook[15].

TABLE 5.1

Gaseous Effluents from Natural Gas Processing Plant

Pollutant	Emission factors lb/10^6 cu. ft.	Annual quantities associated with process boiler consuming 2.56 x 10^9 cu. ft. of gas Te/yr
SO_x	-	900[10]
Particulates	18[6]	21
CO	17[6]	20
Hydrocarbons	3[6]	3
NO_x	230[6]	267
Aldehydes	3[11]	3
Organics	7[11]	8

A major function of the processing stage is the conversion of the hydrogen sulfide in the natural gas to elemental sulfur. Although techniques now under development have H_2S removal efficiencies as high as 99.8%, current natural gas processing plants typically utilize a two-stage or three-stage Claus process, for which the conversion efficiency is 95%[6]. The uncoverted H_2S is burned so that the releases are in the form of SO_2. Using data on the SO_2 released from natural gas processing in selected areas of the U.S.[10], and assuming a sulfur-removal efficiency of 95%, the emission rate of SO_2 is 2.5×10^4 lb per million Btu of processed gas. Scaled to the model plant, where 8.67×10^{10} cu. ft./yr of natural gas is processed, the release of SO_2 is 900 Te/yr.

Natural-gas processing produces by-product natural gas liquids at the rate of 32.8 bbl. per million cu. ft. of gas processed*, corresponding to 3.0×10^6 bbl. of liquid petroleum products for the present flowsheet.

Of the raw gas entering processing plants, 0.24% is flared or vented to the atmosphere*; this corresponds to the venting and flaring of 2.1×10^8 cu. ft./yr for the present flowsheet.

---

* Calculated from data presented in the 1969 Minerals Yearbook[1], p. 740.

5.5 Transmission of Residual Gas to Power Plant

Residual natural gas leaves the processing plant at the annual rate of 7.7×10^{10} cu. ft. The efficiency, 98%, of the transmission system between the processing and power plants is determined by the ratio of the rate of residual natural gas usage for fueling the compressors at this stage, 1.8×10^{9} cu. ft., to the input of 7.7×10^{10} cu. ft.

The quantity of fuel gas used here, 1.8×10^{9} cu. ft. per year, is based upon the discussion in Section 5.3. It is 79%[14][1] of the fuel gas used annually in both stages of transmission, 2.3×10^{9} cu. ft. The yearly output of NO_x at this stage, based upon the emission factor of 2500 lbs. NO_x per 10^{6} cu. ft. of fuel gas consumed[5][6], is 2.0×10^{3} Te.

In 1968, there were 233,940 miles of gas transmission lines in the U.S.[1]. Scaling the total transmission pipeline mileage, the industry fraction of 0.39% associated with this flowsheet (cf. Section 5.3) yields 910 miles of pipeline for transmitting fuel from the processing plant to the 1000 Mw(e) power plant. Based on data presented in Section 5.3, transmission requires 12,800 acres of land.

5.6 Power Plant Operation

The 1000 Mw(e) power plant is assumed to operate at a 100% capacity factor and have an overall thermal efficiency of 38%. The resulting thermal energy budget is the same as that given in Table 3.1. For a natural-gas heating value of 1050 Btu/cu.ft.[11], the annual fuel supply is 7.49×10^{10} cu. ft.

An estimated 100 to 200 acres is required for the power plant[12], which is less than that for coal-fired power plants because of the absence of fuel and ash storage facilities.

Liquid wastes associated with boiler feedwater treatment and blowdown are assumed to be identical to those for the coal-fired power plant, summarized in Table 3.5.

5.7 Flue Gas Effluents

Combustion of the natural-gas fuel results in 8.53×10^{11} cu.ft./yr of flue gas*. A typical particulate emission rate for natural-gas-fired power plants is 15 lb. per 10^6 cu. ft. of gas consumed, resulting in 510 Te/yr emitted from the stack. No fly ash removal is required.

Quantities of gaseous effluents emitted from the power plant stack are summarized in Table 5.2, based upon the input of 7.49×10^{10} cu. ft. of natural gas.

Table 5.2

Gaseous Effluents from Natural-Gas-Fired Power Plant - 1000 Mw(e)

	Emission factors lb. per 10^6 cu. ft.	Yearly effluents Te/yr
SO_x	0.6[6]	20.4
Hydrocarbons	1[6]	34
NO_x	600[6]	2.0×10^4
Aldehydes	3[11]	102
Organics	4[1]	136

* Calculated from data presented in Reference (13).

5.8 Condenser Cooling

It is assumed that condenser cooling is provided by evaporative cooling towers. The quantities are identical to those for the 1000 Mw(e) coal-fired power plant discussed in Section 6.2.

REFERENCES

1. U.S. Department of the Interior, "Minerals Yearbook - 1969," vols. I-II (1971).

2. U.S. Federal Power Commission, Opinion No. 162: Arkansas Louisiana Gas Company, Docket No. CP 70-267, p. 5 (February, 1972).

3. National Petroleum Council, "U.S. Energy Outlook. An Initial Approach," Vol. 2, (July, 1971).

4. Oil and Gas Journal, "Oil Refineries," Volume 72, No. 13, p. 73 (April, 1974).

5. Private communication, George W. Rowe, Sr. Gas Engineer, Pacific Gas and Electric Company, San Francisco, California.

6. U.S. Environmental Protection Agency, "Compilation of Air Pollutant Emission Factors," (April, 1973).

7. U.S. Federal Power Commission, Docket No. CP72-8, "Environmental Impact of Columbia LNG Corporation Gas Processing Plant," p. 4 (November, 1971).

8. U.S. Department of the Interior, "Water Use in Mineral Industry," Bureau of Mines Information Circular 8285, p. 28 (1966).

9. U.S. Department of the Interior, "Minerals Yearbook - 1092," vol. II, p. 340 (1963).

10. Processes Research, Inc., Sulfur Dioxide from Natural Gas Fields, Task Order No. 20, Contract No. CPA 70-1, prepared for Office of Air Programs, Environmental Protection Agency (July 21, 1972).

11. U.S. Environmental Protection Agency, "Compilation of Air Pollutant Emission Factors," (February, 1972).

12. Energy Policy Staff, Office of Science and Technology, "Considerations Affecting Steam Power Plant Site Selection," p. 11 (December, 1968).

13. Esso Research and Engineering Co., "Systems Study of Nitrogen Oxide Control Methods for Stationary Sources," Final Report Vol. II, p. 1-18 (November, 1969).

14. Gas Facts, 1971 Data, American Gas Association, Arlington, Virginia, 1972.

15. U.S. Department of the Interior, "Minerals Yearbook-1972," Vol. I.

6. WASTE HEAT REJECTION

6.1 Once-Through Cooling Water

Once-through cooling involves withdrawing large quantities of surface water from a river, large lake, estuary, or ocean and returning that surface water after it has passed through the steam condenser. The required quantity of cooling water is proportional to the heat rejection rate divided by the temperature rise. Temperature increases of 10 to 20°F are typical. A temperature rise of 15°F has been assumed in the present analysis, resulting in a water requirement of 966,000 gal/min for the light-water power reactor and 574,000 gal/min for the coal-fired power plant, as shown on the flowsheets Figures 6.1 and 6.2.

Because of the enormous quantities of water circulated, the heated water must be discharged at a point well removed from the intake location to avoid recirculation of the heated water. The intake structure is usually submerged and extends far from the shoreline. The intake must be designed with screens and low-velocity diffusers to minimize the loss of fish by physical impact. In some installations submerged outfalls for discharge water are necessary to minimize locally heated areas.

Besides being the most economical cooling technology when sufficient quantities of surface water are available, once-through cooling has the advantage that it offers large quantities of discharge water for the dilution of liquid effluents. For example, the indicated yearly releases of tritium and non-tritium radioactivity from the light-water nuclear

Figure 6.1

Light-Water Nuclear Plant, Waste-Heat Rejection by Once-Through Cooling

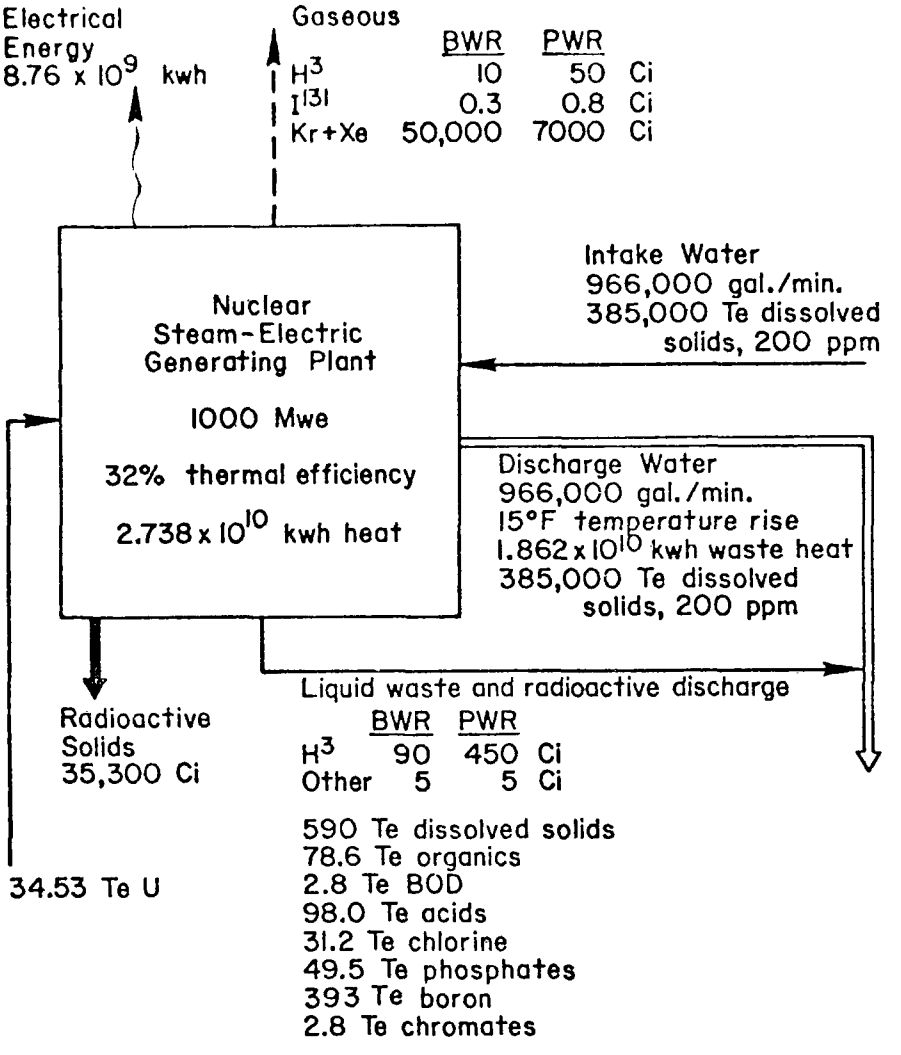

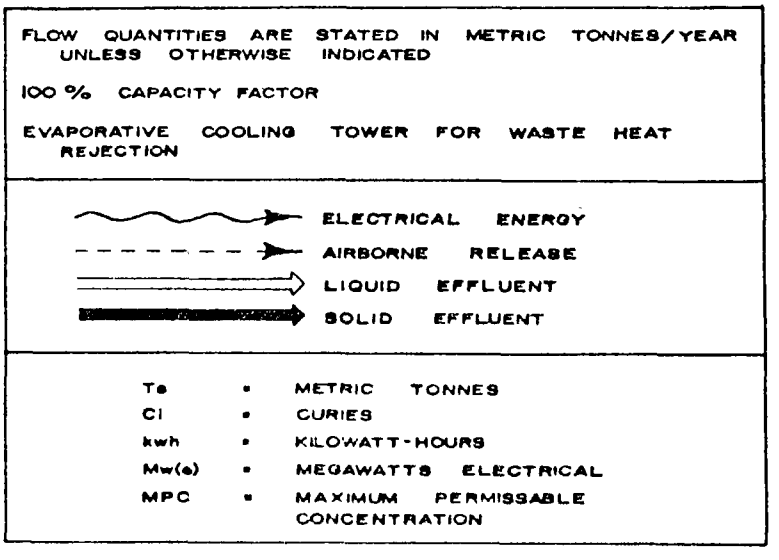

Figure 6.2

Coal-Fired Power Plant, Waste-Heat Rejection by Once-Through Cooling

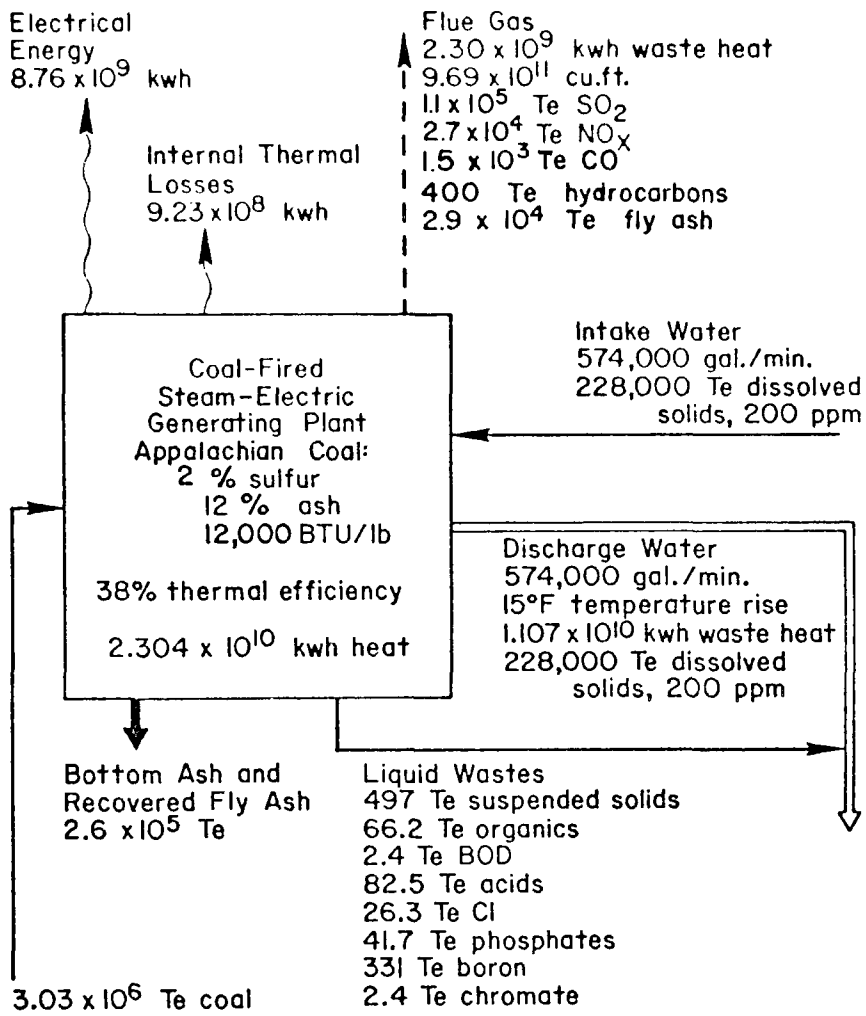

FLOW QUANTITIES ARE STATED IN METRIC TONNES/YEAR UNLESS OTHERWISE INDICATED

100 % CAPACITY FACTOR

EVAPORATIVE COOLING TOWER FOR WASTE HEAT REJECTION

ELECTRICAL ENERGY

AIRBORNE RELEASE

LIQUID EFFLUENT

SOLID EFFLUENT

Te	•	METRIC TONNES
Ci	•	CURIES
kwh	•	KILOWATT-HOURS
Mw(e)	•	MEGAWATTS ELECTRICAL
MPC	•	MAXIMUM PERMISSABLE CONCENTRATION

plant, when diluted in the discharge water, result in concentrations well below the proposed Appendix I, 10 CFR 50, design-objective concentrations of 5×10^{-6} microcuries/cc for tritium and 2×10^{-8} microcuries/cc for non-tritium radionuclides in liquid effluents. Also, the concentration of dissolved salts in the liquid discharge is the same as that in the intake; there is no salt concentration by evaporation that occurs in evaporative cooling towers and cooling ponds. There are no plumes of humidified air, as from evaporative cooling, which can contribute to icing and fogging. The visual profile is the least obtrusive of all the cooling technologies. Some environmental benefits are claimed as a result of the rapid growth of certain fish species in the vicinity of the heated outfall, but these species appear to be sensitive to the loss of heated discharge water during plant shutdown.

The discharge of large quantities of hot water does change the ecology of the water in the vicinity of the discharge; the oxygen content is lowered, metabolic rates are altered, and the growth of undesirable bacteria is enhanced. Also various forms of aquatic life, such as fish larvae, flow through the intake screens and through the condenser tubes, resulting in high mortality rates of these species.

6.2 Evaporative Cooling Towers and Spray Cooling

Equipment for evaporative cooling may consist of a mechanical draft cooling tower, a natural draft cooling tower, or a spray cooling pond or canal. For the purpose of this report, the rate of circulation of water between

the steam condenser and the evaporative cooler is calculated on the basis of an assumed 15°F temperature rise in the water as it flows through the condenser. Consequently, the circulation rate is numerically equal to the flow rate for once-through cooling, which was calculated on the basis of the same temperature rise.

To calculate the water evaporation rate it was assumed that air enters the evaporative cooler at a temperature of 85°F and a relative humidity of 40%, corresponding to a wet bulb temperature of 68.4°F. Using thermodynamic data[1] for air at various temperatures and water content, the dissipative heat load can be translated into a volumetric flow rate of air and a rate of evaporation of water. The results are shown on the flow sheets, Figures 6.3 and 6.4.

Since the water make-up to the cooling system contains dissolved solids which are not removed in the evaporation process, it is necessary that there be a water discharge, or blowdown, to keep the dissolved solids from building up to a high concentration in the water circulation system. The blowdown rate depends upon the salt concentration in the make-up water and the tolerable salt concentration in the circulating system and the blowdown. Typical blowdown rates are of the order of 1% of the circulation rate.

Drift, or airborne entrained water containing dissolved solids, can be an important environmental pollutant from evaporative cooling towers. The amount of drift varies with tower design and local wind conditions.

Figure 6.3

Light-Water Nuclear Plant, Waste-Heat Rejection by Evaporative Cooling

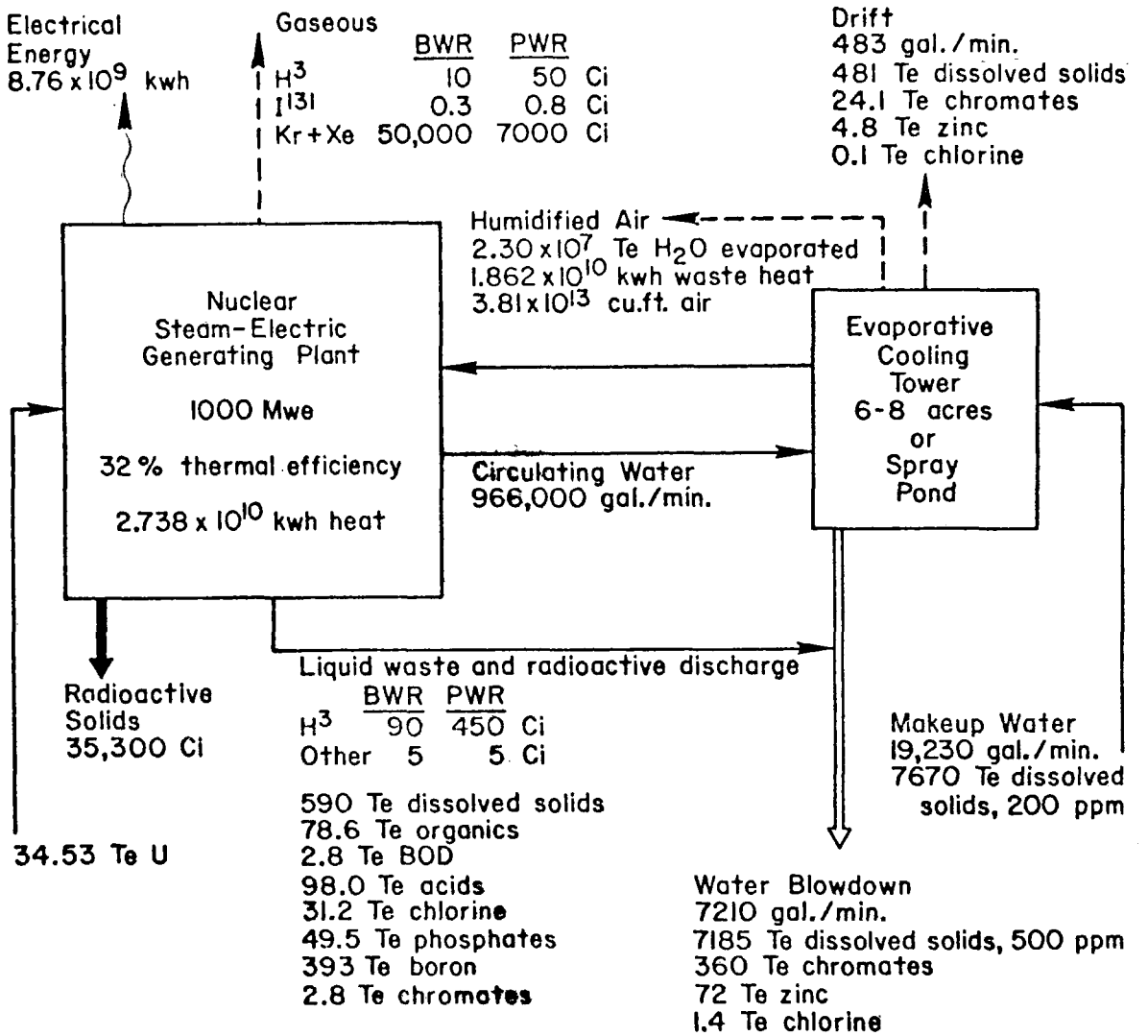

FLOW QUANTITIES ARE RATED IN METRIC TONNES/YEAR UNLESS OTHERWISE INDICATED

100 % CAPACITY FACTOR

EVAPORATIVE COOLING TOWER FOR WASTE HEAT REJECTION

ELECTRICAL ENERGY

AIRBORNE RELEASE

LIQUID EFFLUENT

SOLID EFFLUENT

Te = METRIC TONNES
Ci = CURIES
kwh = KILOWATT-HOURS
Mw(e) = MEGAWATTS ELECTRICAL
MPC = MAXIMUM PERMISSABLE CONCENTRATION

Figure 6.4

Coal-Fired Power Plant, Waste-Heat Rejection by Evaporative Cooling

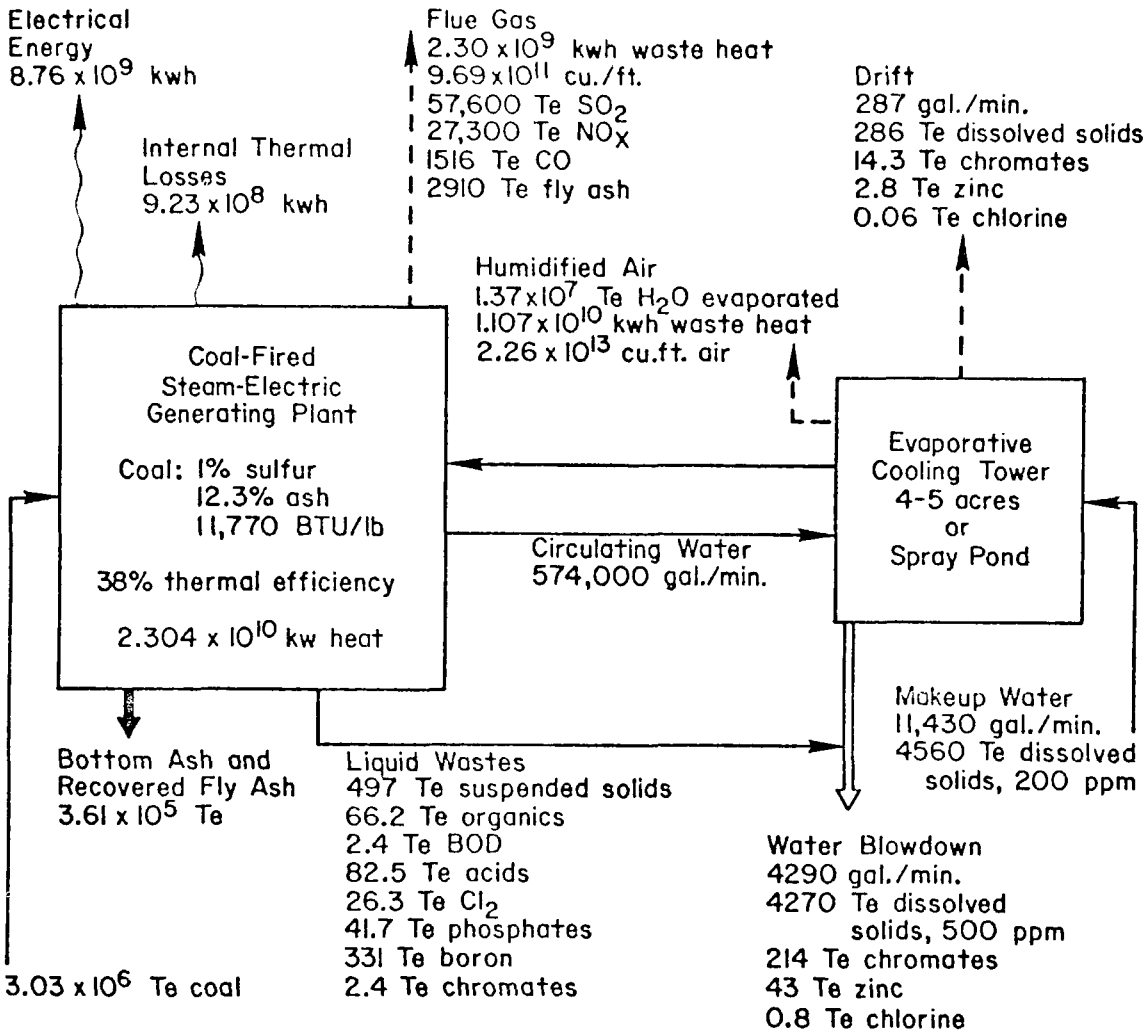

FLOW QUANTITIES ARE STATED IN METRIC TONNES/YEAR UNLESS OTHERWISE INDICATED

100 % CAPACITY FACTOR

EVAPORATIVE COOLING TOWER FOR WASTE HEAT REJECTION

ELECTRICAL ENERGY

AIRBORNE RELEASE

LIQUID EFFLUENT

SOLID EFFLUENT

Te	•	METRIC TONNES
Ci	•	CURIES
kwh	•	KILOWATT-HOURS
Mw(e)	•	MEGAWATTS ELECTRICAL
MPC	•	MAXIMUM PERMISSABLE CONCENTRATION

Because of their taller stacks and lower air velocities, the natural draft towers operate with less drift than do mechanical draft towers. Drift losses are probably greatest for spray ponds and spray canals[7]. Drift loss rates are usually expressed as a percentage of the circulating water flow. For evaporative cooling towers drift percentages as high as 0.2% and as low as 0.002% are quoted[2,3,4]. The current drift warranty on large natural-draft cooling towers is 0.1%[2]. A nominal[3] drift loss from mechanical-draft towers of 0.05% of the recirculating flow is used in the present analysis. For the reference light-water nuclear power plant this corresponds to a drift loss of 483 gallons per minute.

The concentration of dissolved solids in the circulating system and in the blowdown water and drift depend upon the rate of water evaporation, the drift rate, the blowdown rate, and the concentration of solids in the water make-up. In the flowsheets shown here the make-up water is assumed to contain a nominal concentration of 200 parts per million (ppm) of dissolved solids. It is assumed that the concentration in the blowdown water is limited to 500 ppm, resulting in a typical concentration ratio of 2.5 for the salt concentration in blowdown and drift relative to the concentration in water make-up.

Higher salt concentrations than the 200 ppm concentration considered in this reference design are found in many inland waters. For example, the Colorado River, which supplies large quantities of water to the south-western United States, contains an average salinity of 600 ppm as it flows

through Arizona, increasing to 850 ppm at the Imperial Dam. These salt contents are expected to increase to 800 ppm and 1340 ppm by the year 2000 unless measures are taken to control the river's salinity[5].

Drift becomes a more serious environmental contaminant when salt water is used as make-up. Typical sea water contains 19,000 ppm chloride, 400 ppm calcium, 1350 ppm magnesium, and 25 to 40 ppm total carbon[22]. Distribution of even several hundred gallons per minute of sea water over adjacent terrain as drift presents ecological problems, and these are amplified by the concentrating effect of evaporation (2.5 times in the present example).

The following quantities in Table 6.1 are calculated for the evaporative cooling system for the reference light-water nuclear power plant.

Table 6.1

Water Consumption for Evaporative Cooling Tower, Light-Water Nuclear Plant

Waste heat dissipated: 1.86×10^{10} kwh/yr

Water evaporation rate: 11,540 gal/min

	flow rate gal/min	dissolved solids Te/yr
Make-up water	19,230	7660
Drift	483	480
Blowdown water	7,210	7180

The salt concentrated by evaporation appears as the increased concentration of dissolved solids in the blowdown and drift. The amount concentrated is the product of the quantity of water evaporated and the concentration of dissolved solid in the make-up water. For the light-water reactor reference design this corresponds to 4600 Te/yr. The above data are scaled according to the amount of waste heat dissipated to obtain the evaporative cooling quantities shown in the flowsheets.

In addition to the concentrated dissolved solids, the drift and blowdown water from evaporative cooling systems will contain chemicals added to the circulating water to prevent scale, to control corrosion, and to prevent microbiological growth. Sulfuric acid is usually added to lower the pH, reducing the deposition of dissolved solids as scale on the condenser heat transfer surfaces. Corrosion inhibitors generally are a combination of cathodic and anodic inhibitors. The chromate-based inhibitors have been the most widely accepted[9]. Where it has been necessary to discontinue the use of environmentally hazardous chromates, blends of zinc sulfate and lignosulfonates are used. Other chemical combinations for inhibiting corrosion are chromates-zinc, chromates-hexametaphosphates, chromates-organics, chromates-hexametaphosphates-zinc, chromate-zinc-organic, organic-zinc, nitrites, sodium silicates, and sodium silicated with dispersives and anti-nucleating agents. The increased use of zinc-containing chemicals may result in requirements for ion-exchange treatment of the water blowdown to reduce the likely toxicity to fish. These chemicals

appear in the drift losses. For example, at a chromate concentration of 25 ppm and zinc concentration of 5 ppm in the circulating water, the calculated drift for the reference light-water nuclear power plant carries 24.1 Te/yr of chromates and 4.8 Te/yr of zinc.

Biocides used to kill microorganisms in the cooling tower and circulating system have, in some instances, consisted of copper compounds, tributyl tin, and chlorophenates[10]. These substances have proved dangerous to the microorganisms in the surface waters to which the blowdown water is discharged and have been supplanted by shorter-lived biocides, such as chlorine, bromine, and acrolein, or by other biocides which are less harmful after dilution of the blowdown water. Free-chlorine residuals in the circulating water may be in the concentration range of 0.1 to 1.0 ppm[10,11]. On the basis of 0.1 ppm, the free-chlorine residuals discharged in the reference light-water nuclear plant amount to 0.1 Te/yr in the drift and 1.4 Te/yr in the water blowdown.

Additional chemical contaminants are introduced when wood packing is used in the cooling tower to obtain increased surface area for mass transfer and heat transfer. To reduce deterioration the wood can be impregnated with copper and arsenic salts, but some copper aresinide can be expected to leach into the circulating water. Creosote impregnation has also been used[10]. In modern cooling tower construction non-wood packing materials such as transite, ceramics, and plastic-laminates are utilized.

Increased oxygen content of the evaporative cooling blowdown water, resulting from multipass contacting of the circulating water with air, is an environmental benefit.

The mixing of the large quantities of highly humidified air from the evaporative cooling system can, under some conditions, result in water precipitation, in the form of fog, rain, or ice. It may also result in local air recirculation. The local effects may be less for natural draft cooling towers because of the great height at which the humidified air is released. Even in this case, however, humidity increases in the surrounding air can be detected several miles down-wind of the cooling tower[4]. Even under those atmospheric conditions when there may be no visible plumes from cooling towers, the general humidity level may be raised when conditions of poor atmospheric mixing prevail. Subsequent nocturnal cooling may produce extensive fog in areas not necessarily contiguous with the towers themselves. Also, on days when cumulus clouds form naturally, there can be a tendency for clouds to initiate in the large plumes of humidified air discharged from the evaporative cooling towers and to propagate down-wind as cloud streets, with the possibility of increased precipitation[12].

For fossil-fueled power plants with elevated discharges of combustion gases, the plumes of combustion gas will tend to merge with the plume of humidified air from the cooling tower. The increased humidity can affect gaseous air pollutants in the flue gas. For example, sulfur dioxide in the discharged flue gas can slowly oxidize to sulfur trioxide as it progagates downwind. The sulfur trioxide will react with water vapor to precipitate water droplets containing sulfuric acid, giving rise to "acid rain"[21].

The relatively small volume of discharge water from evaporative cooling systems creates some problem in the dilution-dispersal of liquid wastes. This is illustrated in the case of tritium and non-tritium radio-nuclides in liquid effluents in light-water nuclear power plants, discussed in Section 2.7 of this report.

Land area for spray cooling ponds or spray canals is calculated on the basis of a nominal water loading of 500 lb/hr per square foot of pond or canal area[7]. This results in a land area requirement comparable to that for forced draft and natural draft evaporative cooling towers. The relatively large height, 400 to 600 ft., of the natural-draft cooling tower has become a visual impact consideration in some instances.

6.3 Cooling Ponds

The evaporative loss for cooling ponds is calculated on the basis of data quoted by Oleson and Boyle[7] and by Jaske and Drew[13] for evaporation rates for cooling towers and cooling ponds. Their data, translated to gallons evaporated per unit of waste heat to be disposed of, are as follows:

cooling pond area acres per megawatt of waste heat	specific evaporation gallons per kwh of waste heat
0.47	0.40[7]
0.94	0.50[8]
1.12 (Benton Cty., Wash.)	0.43[13]
2.08 (Lake Arlington, Texas)	0.58[13]

By comparison, for the evaporative cooling tower we have calculated a specific evaporation rate of 0.325 gallons per kwh of waste heat. The total evaporation rate from cooling ponds is greater than that for cooling towers because of the additional surface water exposed to the sun. The pond surface is also exposed to rainfall, and for very large ponds in regions of high rainfall this may reduce the quantity of make-up water. For example, for the pond area of 1.2 acres per megawatt of waste heat, the evaporation of 0.43 gallons per kwh corresponds to a total loss rate of 122 inches of water per year.

Flowsheets for waste-heat rejection by cooling ponds are shown in Figures 6.5 and 6.6. In calculating the quantities of the flowsheets we have used a pond area of 0.94 acres per megawatt and an evaporation rate of 0.50 gallons per kwh of waste heat. The rates of water make-up and blowdown are calculated on the assumption that the concentration of dissolved solids in the make-up and discharge water are the same as those calculated for the evaporative cooling towers.

Figure 6.5

Light-Water Nuclear Plant, Waste-Heat Rejection by Cooling Pond

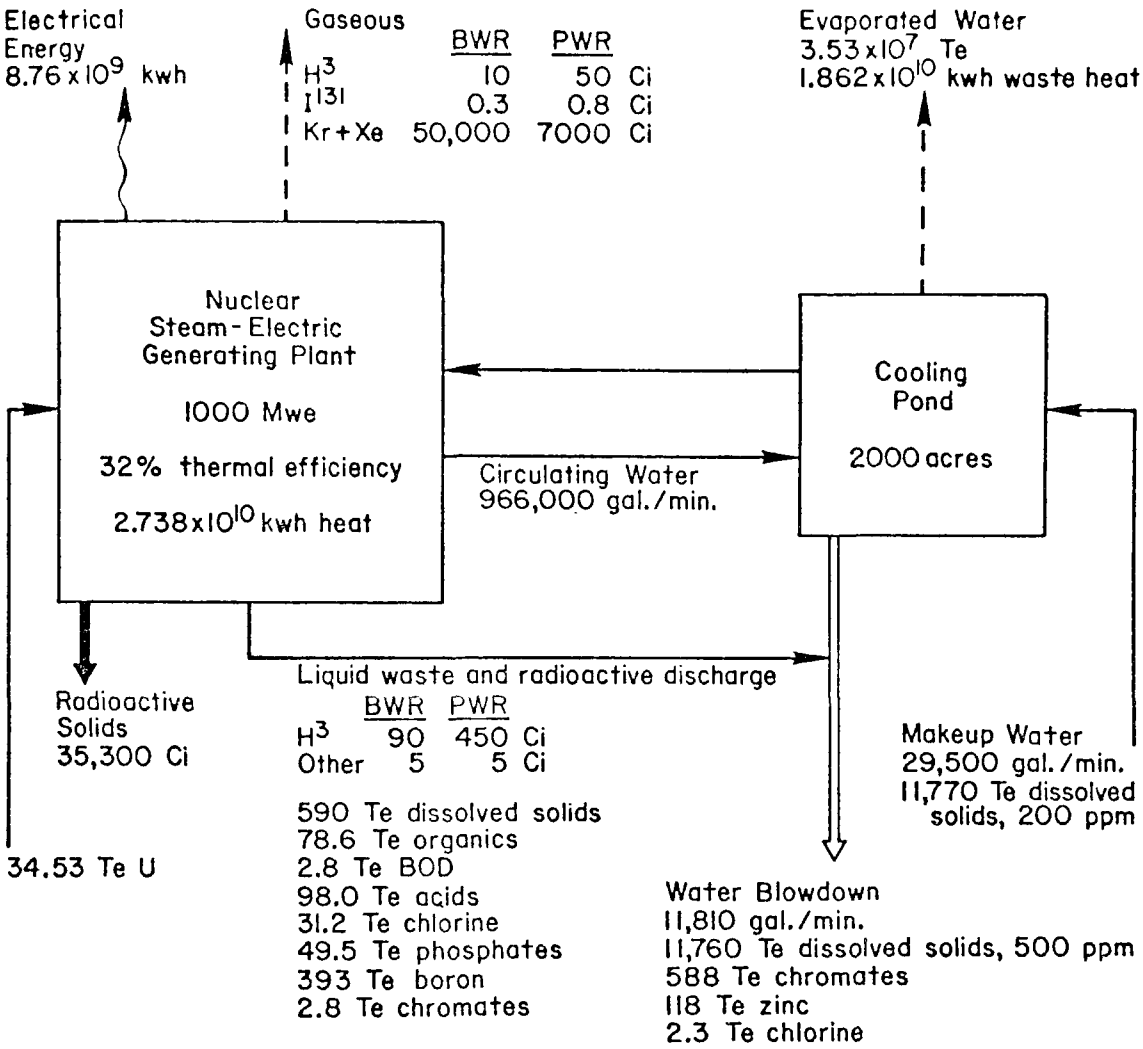

FLOW QUANTITIES ARE STATED IN METRIC TONNES/YEAR UNLESS OTHERWISE INDICATED

100 % CAPACITY FACTOR

EVAPORATIVE COOLING TOWER FOR WASTE HEAT REJECTION

ELECTRICAL ENERGY

AIRBORNE RELEASE

LIQUID EFFLUENT

SOLID EFFLUENT

Te	=	METRIC TONNES
Ci	=	CURIES
kwh	=	KILOWATT-HOURS
Mw(e)	=	MEGAWATTS ELECTRICAL
MPC	=	MAXIMUM PERMISSABLE CONCENTRATION

Figure 6.6

Coal-Fired Power Plant, Waste-Heat Rejection by Cooling Pond

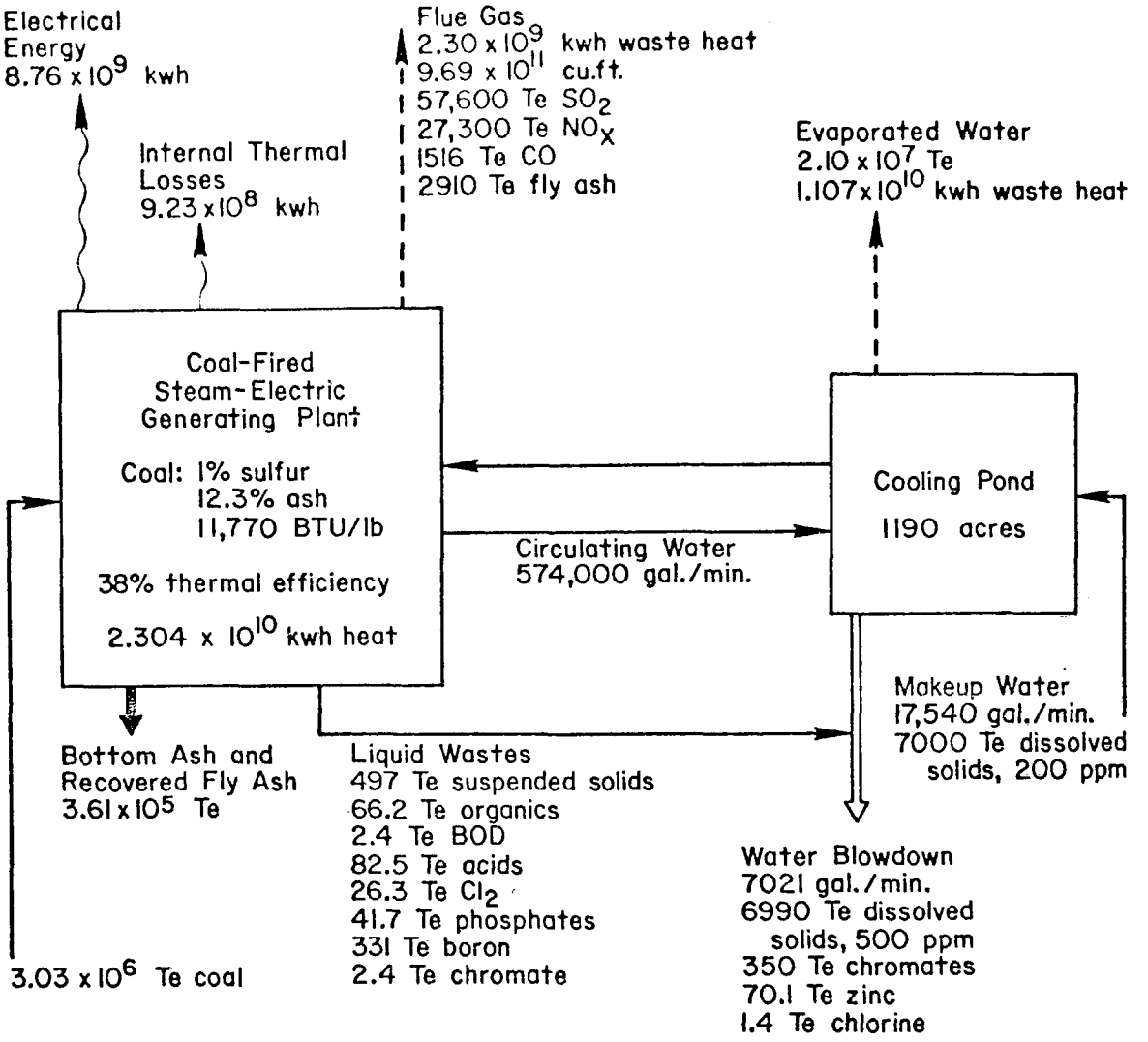

FLOW QUANTITIES ARE STATED IN METRIC TONNES/YEAR UNLESS OTHERWISE INDICATED

100 % CAPACITY FACTOR

EVAPORATIVE COOLING TOWER FOR WASTE HEAT REJECTION

ELECTRICAL ENERGY

AIRBORNE RELEASE

LIQUID EFFLUENT

SOLID EFFLUENT

Te	=	METRIC TONNES
Ci	=	CURIES
kwh	=	KILOWATT-HOURS
Mw(e)	=	MEGAWATTS ELECTRICAL
MPC	=	MAXIMUM PERMISSABLE CONCENTRATION

6.4 Dry Cooling

In dry cooling, the waste heat from the power plant is rejected by heating a stream of ambient air circulated through a large heat exchanger. The heat is transported from the condenser to the heat exchanger by a separate circulating water system. This circulating water may be a closed loop, physically separated from the condensing stream by the condenser heat exchange surfaces. Alternatively, a direct contact spray condenser may be used, wherein a portion of the condensate flows to the boiler, while the remainder is pumped through the dry cooling tower and returns as spray to the condenser. In some designs the low pressure steam from the turbine is condensed directly on the air-cooled heat exchange surfaces, but this is probably not feasible for large power plants because of the enormous volumes of heat exchanger and piping associated with the low pressure steam.

Air is circulated through the dry cooling tower either by electrically driven blowers or by natural circulation through a large hyperbolic tower similar in design but much larger than the hyperbolic towers used in natural draft evaporative cooling towers.

Because it operates on the dry-bulb ambient air temperature, dry cooling is less efficient in energy utilization than evaporative cooling, which operates on the much lower wet-bulb temperature of the air. Consequently, the average temperature at which steam is condensed is higher for dry cooling, the steam condenses at a higher pressure, and less total work is

obtained in expanding the steam through the turbine. Mechanical draft dry coolers also require substantial inputs of electrical power for the blowers. Consequently, dry cooling decreases the net thermal efficiency of the power plant and, for the same electrical output, results in larger quantities of make-up fuel, chemical and radiological effluents, and thermal discharges. Dry cooling towers are also more expensive in capital cost than evaporative cooling towers. Recent cost estimates in the range of $15/kw(e)[15] to $26/kw(e)[14] have been quoted.

Balanced against these disadvantages is the very small water consumption for a dry cooled electrical power plant.

In a recent design[14] of a 350 Mw(e) power plant with dry cooling the total plant water requirement is specified as 50 gal/min for boiler feed make-up, bearing cooling, and fire protection. This is scaled here according to the total thermal power to yield estimated water make-up rates of 193 gal/min for a light-water nuclear plant and 154 gal/min for a coal-fired plant, each with dry cooling, as shown in the dry-cooling flowsheets Figures 6.7 and 6.8. This water make-up rate is, however, much smaller than that quoted by Reti[16,17], where 30 gal/min per megawatt of electrical power was estimated. This must reflect differences in estimated water consumption for plant auxiliary services and leakage, since the actual blowdown water from the steam system of a 1000 Mw(e) nuclear plant is only about 10 gal/min[18].

Figure 6.7

Light-Water Nuclear Plant, Waste-Heat Rejection by Dry Cooling

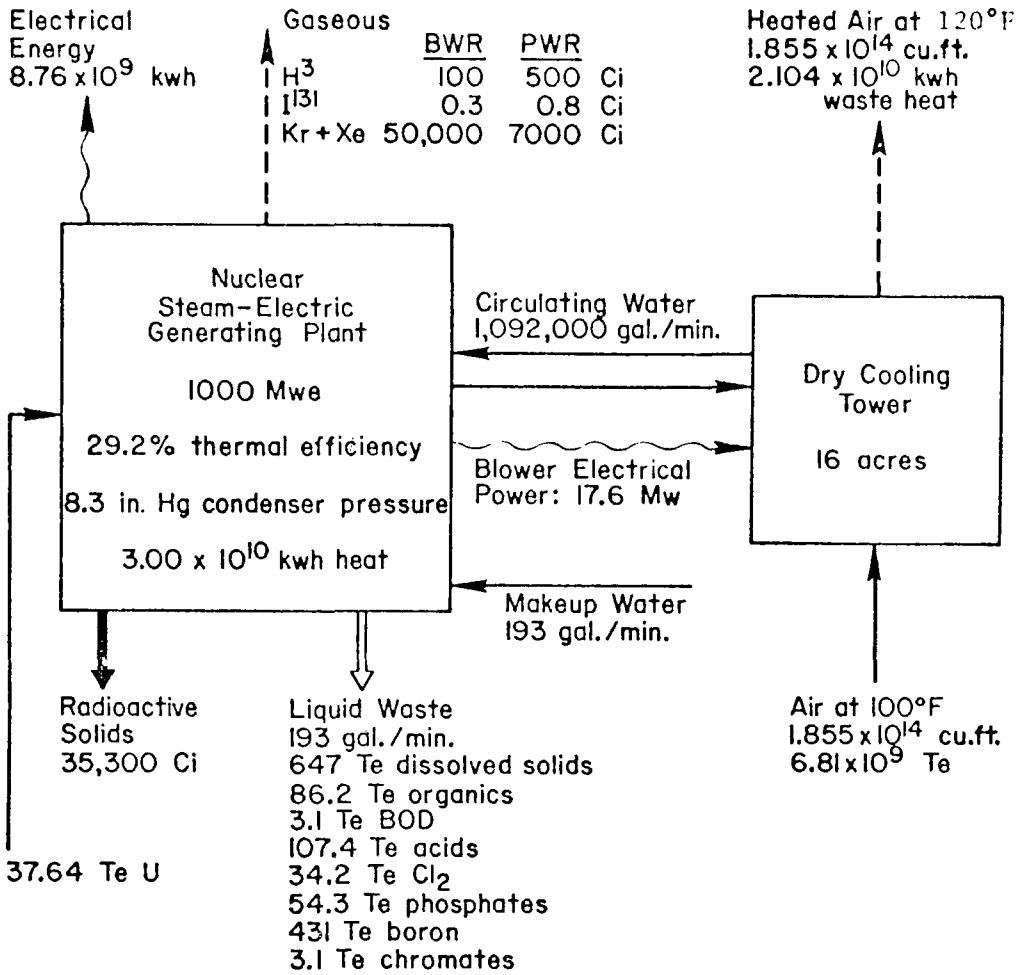

FLOW QUANTITIES ARE STATED IN METRIC TONNES/YEAR UNLESS OTHERWISE INDICATED

100 % CAPACITY FACTOR

EVAPORATIVE COOLING TOWER FOR WASTE HEAT REJECTION

ELECTRICAL ENERGY

AIRBORNE RELEASE

LIQUID EFFLUENT

SOLID EFFLUENT

Te	=	METRIC TONNES
Ci	=	CURIES
kwh	=	KILOWATT-HOURS
Mw(e)	=	MEGAWATTS ELECTRICAL
MPC	=	MAXIMUM PERMISSABLE CONCENTRATION

Figure 6.8

Coal-Fired Power Plant, Waste-Heat Rejection by Dry Cooling

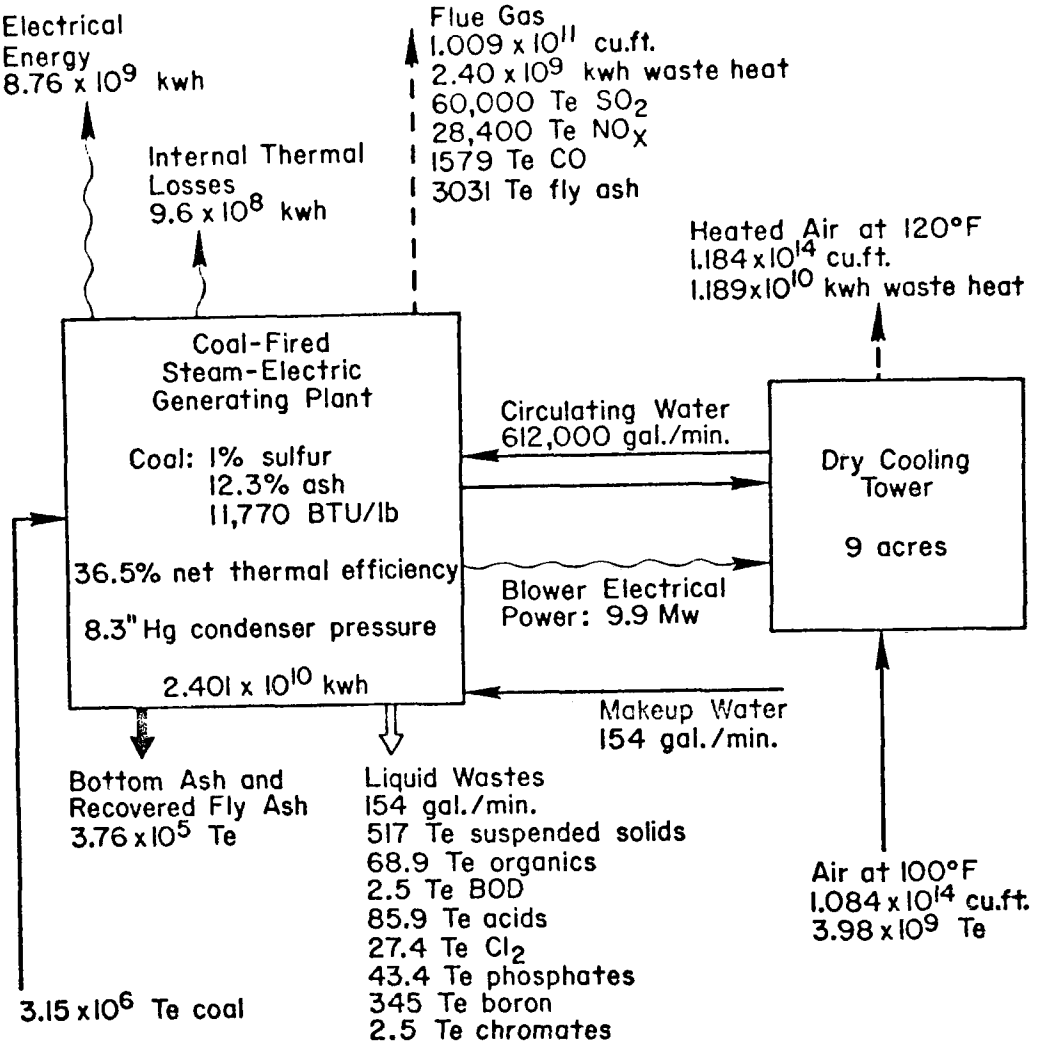

FLOW QUANTITIES ARE STATED IN METRIC TONNES/YEAR UNLESS OTHERWISE INDICATED

100 % CAPACITY FACTOR

EVAPORATIVE COOLING TOWER FOR WASTE HEAT REJECTION

ELECTRICAL ENERGY

AIRBORNE RELEASE

LIQUID EFFLUENT

SOLID EFFLUENT

Te	•	METRIC TONNES
Ci	•	CURIES
kwh	•	KILOWATT-HOURS
Mw(e)	•	MEGAWATTS ELECTRICAL
MPC	•	MAXIMUM PERMISSABLE CONCENTRATION

Representative performance characteristics for mechanical-draft dry cooling towers for a light-water nuclear plant and for a fossil plant are presented in Table 6.2, calculated from data presented by Chave[19] on heat-transfer, blower power, and cost. For this analysis it is assumed that the temperature rise of the circulating coolant is 15°F and the temperature rise of the air is 20°F. Inlet air temperatures of 60, 80, and 100°F are considered. Listed in Table 6.1 are the blower power and the total heat generation rate to furnish the blower power, other plant energy loads, and a net electrical product of 1000 Mw(e). The increase in thermal power with increasing inlet air temperature is a result of the increasing condenser pressure. Because of the relatively low pressure of turbine-inlet steam in the light-water nuclear plant and because of the greater importance of expansion work in the low-pressure portion of the steam cycle, the nuclear plant is relatively sensitive to condenser pressure. As compared with once-through cooling or evaporative cooling with a low wet-bulb temperature, dry cooling with an inlet air temperature of 100°F results in a reduction of the net thermal efficiency from 32% to 29.2% and a 9% increase in make-up fuel requirement. Similarly, for the fossil plant, dry cooling with 100°F air reduces the net thermal efficiency from 38% to 36.5% and increases the fuel make-up requirement by 4%.

As a result of the very small amount of water discharged from a dry-cooled nuclear plant there is no medium to dilute the liquid radioactive discharges The radioactive waste management system must then be capable of reducing

Table 6.2

Heat Rejection by Forced Draft Dry Cooling

1000 Mw Net Electrical Output

	Nuclear (Water Reactors)			Fossil		
	Ambient Air Temperature, °F			Ambient Air Temperature, °F		
	60	80	100	60	80	100
Condenser back pressure, in. Hg	2.75	5.0	8.3	2.75	5	8.3
Total heat generation rate, Mw(t)	3198	3315	3423	2662	2696	2741
Condenser heat reject rate, Mw(t)	2182	2299	2408	1280	1309	1347
Blower power, Mw(t)	16.0	16.8	17.6	9.4	9.6	9.9
Condenser cooling water, 15°F temperature rise, gal/min.	992,000	1,045,000	1,095,000	582,000	595,000	612,000
Air circulation rate, 20°F temperature rise, cu.ft./min.	3.20×10^8	3.37×10^8	3.53×10^8	1.88×10^8	1.92×10^8	1.97×10^8
Capital cost of cooler, $\$10^6$	31	33	34	18.8	19.2	19.7
Land for coolers, acres	15.0	15.8	16.5	8.8	9.0	9.2
Fuel requirement relative to wet cooling at 1.5 in. Hg back pressure	1.02	1.06	1.09	1.01	1.02	1.04

the non-tritium radioactive liquid discharges to about 0.006 Ci/yr and the tritium liquid discharges to about 1.5 Ci/yr to meet the proposed Appendix I design-objective concentrations of 2×10^{-8} microcuries/cc for non-tritium radionuclides and 5×10^{-6} microcuries/cc for tritium in liquid effluents. There is technology available to accomplish these reductions. If the tritium is controlled by returning all tritiated water to the reactor coolant system, the tritium released yearly to the reactor coolant will eventually appear as gaseous tritium release[18], as is indicated on the flowsheet.

There is a compensating advantage resulting from the large volume of air passing through the cooling tower. If all the primary and secondary air sources containing gaseous radionuclides are discharged into the air stream leaving the cooling tower, the rapid mechanical dilution followed by atmospheric dispersion will result in far lower concentrations of airborne radionuclides at and beyond the site boundary. This may provide an alternative means of reducing the offsite concentration of gaseous radioiodine to the design-objective levels proposed in Appendix I of the 10 CFR 50 regulations, i.e., 10^{-15} microcuries/cc when milk-food chains are considered. (The possible problem of gaseous radioiodine effluents is discussed in Section 2.8).

The large volume of exhaust air from dry cooling towers may also be useful in aiding the dilution of flue gas effluents in fossil-fueled plants. The volume of dry-cooling tower air is about 1000 times greater than the volume of flue gas from a coal plant. Discharging the flue gas into the dry-cooling

air would result in a thousand-fold dilution at the point of release, with further atmospheric dilution occurring as the mixed discharge air disperses through the environment. (The total mass emission of these emission of these effluents is, of course, not reduced by dilution.) Because the dry-cooling air is not humidified in the process of receiving the waste heat, the acid-rain problems discussed earlier for evaporative cooling, which can result from the oxidation and interaction of sulfur oxides with water vapor, would be expected to occur to a far less extent with dry-cooling air. In fact, because of the relatively high temperature of the mixed flue-gas air stream and the consequently higher vapor pressure of sulfuric and sulfurous acids, acid rain could conceivably be less of a problem with dry cooling than when the flue gas is discharged into the ambient air environment.

REFERENCES

1. Perry, J. H., Ed., Chemical Engineers' Handbook, 3rd ed., 766, McGraw Hill (1950).

2. Detroit Edison Co., Final Environmental Impact Statement for the Fermi II Nuclear Power Plant.

3. Shofner, F. M. and C. O. Thomas, "Drift Measurements in Cooling Towers," Cooling Towers, Chemical Engineering Progress Technical Manual, A.I.Ch.E. (1972).

4. Macaluso, C. A., "Ecological Aspects of Cooling Systems," Cooling Towers, Chemical Engineering Progress Technical Manual, A.I.Ch.E. (1972).

5. Holburt, M. B. and B. J. Gindler, "Legal Aspects of Salinity Caused by Cooling Towers," Cooling Towers, Chemical Engineering Progress Technical Manual, 54-58 A.I.Ch.E. (1972).

6. Nester, D. M., "Salt Water Cooling Tower," Cooling Towers, Chemical Engineering Progress Technical Manual, 115-117 A.I.Ch.E. (1972).

7. Oleson, K.A. and R. R. Boyle, "How to Cool Steam-Electric Power Plants," Chemical Engineering Progress Technical Manual, 94-100 A.I.Ch.E. (1972).

8. Kerst, H., "Evaluation of Cooling Tower Water Treatments," Cooling Towers, Chemical Engineering Progress Technical Manual, 70-75 A.I.Ch.E. (1972).

9. Griffin, R. W., "Corrosion Control of Cooling Towers," Cooling Towers, Chemical Engineering Progress Technical Manual, 65-69 A.I.Ch.E. (1972).

10. Brooke, M., "Development of Cooling Water Treatment," Cooling Towers, Chemical Engineering Progress Technical Manual, 76-77 A.I.Ch.E. (1972).

11. Comeaux, R. V., "Supply, Use, and Disposal Problems," Cooling Towers, Chemical Engineering Progress Technical Manual, 78-82 A.I.Ch.E. (1972).

12. Hosler, C. L., "Wet Cooling Tower Plume Behavior," Cooling Towers, Chemical Engineering Progress Technical Manual, 27-32 A.I.Ch.E. (1972).

13. Jaske, R. T. and H. R. Drew, "Simulation of Evaporation from a Cooling Lake with a Comparison to a Real Case and the Alternative Use of Cooling Towers," Cooling Towers, Chemical Engineering Progress Technical Manual, 131-137 A.I.Ch.E. (1972).

14. Johnson, V.T., "A Conceptual Design for a Power Plant Dry-Cooling System Using a Hyperbolic Tower," Cooling Towers, Chemical Engineering Progress Technical Manual, A.I.Ch.E. (1972).

15. Rossie, J.P., "Dry-Type Cooling Systems," Cooling Towers, Chemical Engineering Progress Technical Manual, A.I.Ch.E. (1972).

16. Dynatech R/D Company, "A Survey of Alternate Methods for Cooling Condenser Discharge Water, Large Scale Heat Rejection Equipment," 16130 DHS, (July, 1969).

17. Reti, G.R., "Dry Cooling Towers," Proc. American Power Conference, 1963.

18. Rodger, W.A., Testimony on Behalf of Consolidated Utility Group, U.S.A.E. United States Atomic Energy Commission Hearings on Proposed "As Low As Practicable" Amendment to 10 CFR 50 "Licensing of Production and Utilization Facilities," DOCKET RM 50-2 (April, 1972).

19. Chave, C.T., "Applicability of Air Cooling to Siting Problems in the Pacific Coast Area," Pacific Coast Electrical Association, Engineering and Operating Conference, San Francisco (March, 1970).

20. Parker, F.L. and P.A. Krenkel, "Thermal Pollution: Status of the Art," Report No. 3, Department of Env. and Water Resources Engineering, Vanderbilt University, Nashville, Tennessee (December, 1969).

21. Likens, G.E., F.H. Bormann, N.M. Johnson, "Acid Rain," Environment, 14, 33-40 (March, 1972).

22. Horne, R.A., Marine Chemistry: The Structure of Water and the Chemistry of the Hydrosphere, John Wiley and Sons, Inc., New York, 568 p, (1969).

7. ELECTRICAL POWER FROM LOW Btu GAS MADE FROM HIGH-SULFUR COAL

One of the several alternate processes for reducing sulfur dioxide effluents from the combustion of high sulfur coal involves the production of fuel gas from the coal and the chemical separation of sulfur before this gas is burned as fuel in an electrical generating plant. A representative fuel cycle for this process, beginning with coal shipped to the gasification process, is shown in Figure 7.1. The process considered here is based upon the design by Squires[1,2], whereby pulverized coal is gasified in a high-temperature ash-agglomerating fluidized bed fed with air and steam, producing a low-Btu (i.e. low heating value) fuel gas according to the overall water-gas reaction.

$$C + H_2O \rightarrow CO + H_2$$

Heat for the endothermic reaction is supplied by oxidation of carbon by air in the lower part of the bed, locally forming CO_2 which then shifts to combustible CO by contact with carbon in the higher-temperature zones of the gasifier. Volatiles from the coal form hydrogen, methane, and higher hydrocarbons. Much of the coal ash agglomerates and is removed from the bottom of the gasifier for storage. Volatile sulfur compounds in the gasified product are H_2S and, to a lesser extent, COS[3]. It is assumed that 0.01% of the gasifier product leaks to the atmosphere and that .01% of the ash is emitted at this stage.

The crude power gas from the gasifier is cooled* to about 1400°F and flows into a gas desulfurization system, consisting of a panel bed filter charged

---

* The heat extracted can be used to generate high-pressure steam for power conversion.

FLOW QUANTITIES ARE STATED IN METRIC TONNES / YEAR
UNLESS OTHERWISE INDICATED

100% CAPACITY FACTOR

EVAPORATIVE COOLING TOWER FOR WASTE HEAT REJECTION

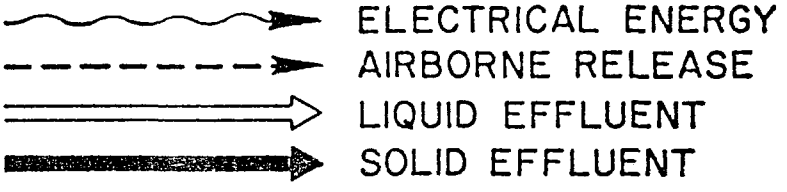

Te	=	METRIC TONNES
Ci	=	CURIES
kwh	=	KILOWATT-HOURS
Mw(e)	=	MEGAWATTS ELECTRICAL
MPC	=	MAXIMUM PERMISSABLE CONCENTRATION

Figure 7.1

Fossil Fueled Power Plant 1000 Mwe
Fueled With Clean Power Gas Made From 3%-S Coal
Material And Environmental Release Flowsheet

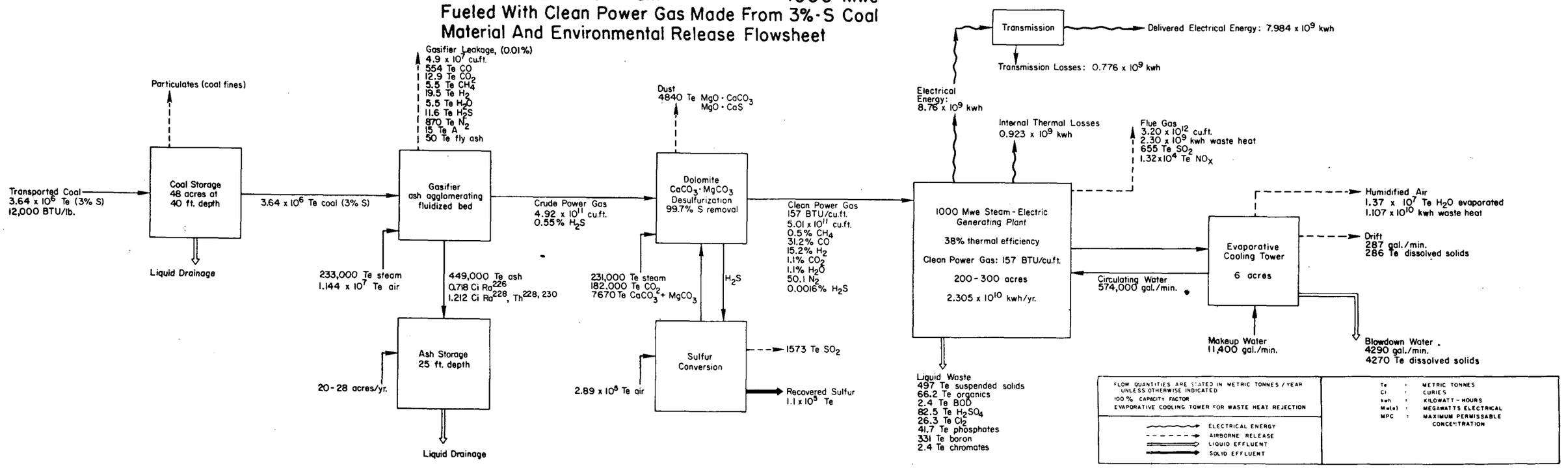

with half calcined dolomite[2,4], $CaCO_3 \cdot MgO$. Gaseous H_2S reacts with the $CaCO_3 \cdot MgO$ to form a sulfurized solid on the filter, with an assumed sulfur removal efficiency of 99.7%* and an assumed 0.5% loss of dolomite.

Sulfurized solid from the panel bed filter is then reacted with steam and CO_2 at 1100°F to release gaseous H_2S and to regenerate the half-calcined dolomite for recycle to the panel bed[2]. The heat evolved in regeneration and in the subsequent cooling of the H_2S-rich by-product gas can be used to generate additional high-pressure steam for power conservation. The CO_2 required for regeneration can be obtained from limestone calcination or can be recovered from the power-plant flue gas.

The gas, rich in H_2S from sulfur desorption, is converted to elemental sulfur for safe storage and for sale as a marketable by-product. The H_2S-rich gas is contacted at high pressure with aqueous H_2SO_3, yielding elemental sulfur according to the exothermic reaction[2]:

$$H_2SO_{3(aq)} + 2H_2S_{(g)} \rightarrow 3S_{(l)} + 3H_2O$$

The H_2SO_3 solution is obtained by burning a portion of the sulfur product in air at high pressure and absorbing the resulting SO_2 gas in water[2]. It is estimated that about 0.7% of the sulfur is lost to the atmosphere as SO_2 leakage[5]. The separated liquid sulfur is cooled and solidified, and the remaining gaseous CO_2 and water vapor are recycled to the previous operation where the H_2S-rich gas was generated.

---

* Laboratory experiments[2] indicate sulfur removal of better than 99%, and dust removal of better than 99.9%.

The clean power gas consists mainly of combustible CO and H_2 and inert N_2. The heating value is estimated to be 157 Btu/cu.ft. (STP)[2]. (By comparison, the heating value of natural gas is 1050 Btu/cu.ft.).

For the present flowsheet, illustrating the material and environmental quantities resulting from application of the coal gasification technology to the basic steam-cycle for power conversion, the clean product gas is assumed to flow directly to a gas-fired boiler.

Based upon one of the more advanced and efficient concepts for coal gasification and gas cleaning, and assuming the same composition of Eastern bituminous coal as that used in Chapter 3, about 20% more make-up coal is required for the fuel cycle described here. Whereas 3.04×10^6 Te/yr are consumed in the coal-burning generator of Chapter 3, the quantity of coal required for the gasifier in the present flowsheet is 3.64×10^6 Te/yr. Consequently, assuming the same coal-treatment operations prior to gasification, the environmental and material quantities for the fuel-cycle operations prior to gasification would be 20% greater than those listed in Figure 3.1.

Using 3% sulfur coal, there are 1.092×10^5 Te of sulfur in the 3.64×10^6 Te of make-up coal. The crude gas contains .55% sulfur, by volume. 99.7% of the sulfur is recovered by the desulfurization technique, or $.997 \times 1.092 \times 10^5$ Te = 1.089 Te. Since 0.3% of the sulfur in the crude gas is left in the clean product gas, and the crude gas contains .55% sulfur, the clean gas contains .0016% sulfur mainly in the form of H_2S. It is estimated that the cost of removing sulfur from the crude gas is about 30% of the cost of removing sulfur from the stack gases of a coal-fired boiler[10].

If the coal gasification and the gas cleaning process are located at the site of the electrical generating plant, an increase in the thermal efficiency of power generation can be obtained by taking advantage of the high temperature and high pressure, e.g. 1200°F and 14 atm., of the product fuel gas. This is accomplished by burning the fuel gas with air and expanding the high-pressure combustion gases through a gas turbine. The hot turbine exhaust gases are then passed through a conventional steam boiler[2,5]. The gas turbine drives a compressor to furnish compressed air for combustion for the gasifier and for the sulfur burner. It also drives an electrical generator. Details of combined-cycle power plant operation and associated material and environmental releases are presented in Part II of this report[11].

The efficiency of energy conservation from this type of combined cycle is expected to be 46%[2], so that the make-up coal requirement would be about 20% less than that shown in Figure 3.1.

REFERENCES

1. Squires, A.M., "Clean Power Gas from Dirty Fuels," Scientific American, 227, No. 4, 26-35 (October, 1972).

2. Dobner, S., M.J. Gluckman and A.M. Squires, Production of Low-BTU Gas from Coal in Combination with Advanced Power Cycles, Paper No. 68b., A.I.Ch.E. Annual Meeting (November 26-30, 1972).

3. Hottel, H.C. and J.B. Howard, New Energy Technology, Some Facts and Assessments, 144-161, M.I.T. Press (1971).

4. Ruth, L.A., A.M. Squires, R.A. Graff, "Desulfurization of Fuels with Half-Calcined Dolomite: First Kinetic Data," Environmental Science and Technology, 6, 1009 (1972).

5. Robson, F.L., A.J. Giramonti, G.P. Lewis and G. Gruber, "Technological and Economic Feasibility of Advanced Power Cycles and Methods for Producing Nonpolluting Fuels for Utility Power Systems," United Aircraft Research Laboratories Report for National Air Pollution Control Administration, U.S. Department of Health, Education and Welfare (December, 1970).

6. Squires, A.M., "Clean Power from Coal," Science 169, No. 3948, pp. 821-828.

7. Squires, A.M., The Coalplex: Gas, Gasoline, and Clean Electricity from Coal, Paper No. 653, A.I.Ch.E. Annual Meeting (November 26-30, 1972).

8. Grossman, P.R. and R.W. Curtis, "Pulverized-Coal-Fired Gasifier for Production of Carbon Monoxide and Hydrogen," Trans - ASME, 76, 689-695 (1954).

9. Chopey, N.P., "Coal Gasification: Can It Stage a Comeback?", Chemical Engineering, 44-46 (April 3, 1972).

10. Hammond, A., W. Netz, T. Maugh, "Energy and the Future," AAAS, Washington, D.C. (1973).

11. Cukor, P. M., "Electrical Power from Combustion Turbine – Steam Turbine Combined Cycle Power Plant," Fuel Cycles - Part II, Teknekron Report No. EEED 106 (December, 1974).

8. ELECTRICAL POWER FROM HIGH-SULFUR COAL, SO_2 REMOVAL BY WET LIMESTONE SCRUBBING

8.1 Process Description

The wet-limestone scrubbing process is designed to remove 90% of the sulfur which would otherwise appear in the stack-gas effluent when burning high-sulfur coal. A representative fuel cycle for this process, beginning with coal shipped to the electrical generating plant, is shown in Figure 8.1. Finely ground limestone ($CaCO_3$) or dolomite ($CaMg(CO_3)_2$ is injected into the furnace, or into the hot flue gas, of a power plant fueled with high-sulfur coal. Thermal energy is consumed in decomposing the limestone, according to the reaction

$$CaCO_3 \rightarrow CaO + CO_2$$

About 20%[1,7] of the sulfur dioxide formed in coal combustion reacts with the solid CaO according to the reaction

$$CaO + SO_2 + 1/2\ O_2 \rightarrow CaSO_4$$

and is removed from the flue gas. The remaining SO_2 and the suspended calcined solids flow with the flue gas and fly ash into a scrubbing tower, where the gases are contacted counter-currently with a recirculating liquid solution and slurry of hydrated calcium oxide and calcium sulfate.

FLOW QUANTITIES ARE STATED IN METRIC TONNES / YEAR
UNLESS OTHERWISE INDICATED

100% CAPACITY FACTOR

EVAPORATIVE COOLING TOWER FOR WASTE HEAT REJECTION

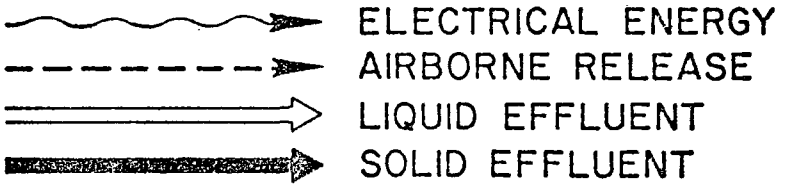

Te = METRIC TONNES
Ci = CURIES
kwh = KILOWATT-HOURS
Mw(e) = MEGAWATTS ELECTRICAL
MPC = MAXIMUM PERMISSABLE CONCENTRATION

Figure 8.1

Coal Fired Power Plant – SO_2 Removal By Wet Limestone Scrubbing – 1000 Mwe Material And Environmental Release Flowsheet

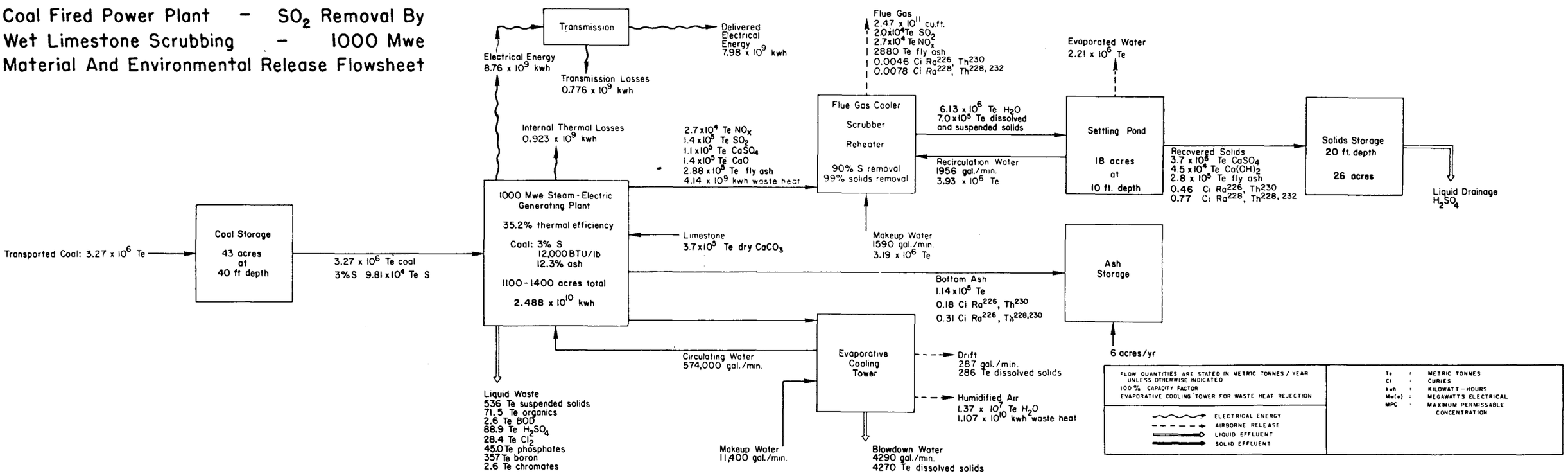

Sulfur dioxide in the gas absorbs and reacts with hydroxyl and bicarbonate ions to form HSO_3^- and $SO_3^=$ ions. These ultimately oxidize to the more stable $SO_4^=$ ions and precipitate as $CaSO_4$. The scrubber is also expected to remove fly ash from the flue gas, eliminating the need for an electrostatic precipitator.

A purge stream of slurry from the scrubbing circuit flows to a settling pond where the solid $CaSO_4$, $Ca(OH)_2$, $CaCO_3$, and fly ash are removed and stored. Settling pond overflow is recycled and make-up process water is added to the system to compensate for the evaporation loss in the settling pond and in the scrubbing tower.

8.2 Basis for Flowsheet Quantities

The coal fuel described in this chapter is similar to the Appalachian coal described in Chapter 3. The heating value is 12,000 Btu/lb, and the ash content is 12.3%. The sulfur content, however, has been increased from 2% to 3%. The quantity of transported coal includes 3.03×10^6 Te/yr for the basic coal plant of 38% thermal efficiency plus 240,000 Te/yr to calcine the $CaCO_3$ injected into the boiler[1], for a total of 3.27×10^6 Te/yr. The net overall thermal efficiency is then 35.5%. Environmental releases in coal mining, coal cleaning and processing are those indicated on the basic coal-plant flowsheet (Figure 3.1), multiplied by 1.14 to allow for the increased coal consumption due to limestone injection.

The flowsheet quantities for this chapter are based upon the model described in Reference (1), which has been demonstrated in two commercial plants of 125 and 140 Mw(e) capacity. The amount of dry limestone injected is 110% of that which is stoichiometrically needed to react with all the sulfur in the coal. The wet limestone (91.8% $CaCO_3$) is actually 8.2% heavier. On-site storage of make-up limestone should be sufficient for at least a one-week supply. On-site wet-grinding and pulverizing is required and handling the limestone contributes to a dusting problem. It is assumed that all of the raw limestone is calcined to CaO in the boiler and 25% of the CaO is converted to $CaSO_4$ in the boiler. All of the sulfur originally present in the coal is assumed to evolve in the flue gas, either as suspended $CaSO_4$ or as SO_2.

The quantity of sulfur entering the power plant (3% by weight of the input coal) is $.03 \times 3.27 \times 10^6$ Te, equivalent to 3066 tonne-moles. Based upon this number of tonne-moles and the reactions described above, the quantities entering the scrubber are calculated. They are shown on the flowsheet and are listed in Table 8.1.

Sulfur recovery in the model is 90%. It may be limited by the partial pressure of SO_2 above the locally acidic, scrubbing liquid containing dissolved H_2SO_3. The gas entering the scrubber is cooled to 177°F. The gas leaving the scrubber is reheated to 250°F to minimize acidic condensation and corrosion in the exhaust system[1]. The quantities of sulfur and calcium products leaving the scrubbing stage are listed in Table 8.2.

TABLE 8.1

Materials Entering the Scrubbing System

Item	Tonne-moles/yr	Te/yr
Calcium carbonate ($CaCO_3$)	3372 (110% of # moles of sulfur in coal)	3.67×10^5
Calcium sulfate ($CaSO_4$)	843 (25% of $CaCO_3$)	1.13×10^5
Calcium oxide (CaO)	2529 (75% of $CaCO_3$)	1.42×10^5
Sulfur dioxide (SO_2)	2223 (# moles of sulfur in coal minus # moles of $CaSO_4$)	1.42×10^5

TABLE 8.2

Calcium and Sulfur Products Leaving the Scrubbing Stage

Item	Tonne-moles/yr	Te/yr
Gas emitted to atmosphere		
SO_2	306 (10% of sulfur entering furnace)	2.0×10^5
Solids in slurry		
$CaSO_4$	2759 (90% of sulfur entering furnace)	3.7×10^5
$Ca(OH)_2$	613 (difference between # moles of injected $CaCO_3$ and $CaSO_4$ in slurry)	4.5×10^4

The ash content of the coal supplied to the furnace is 12.3% by weight or 4.02×10^5 Te/yr. In the model of this chapter 28.4%, or 1.14×10^5 Te/yr become bottom ash, while 71.6%, or 2.88×10^5 Te/yr becomes fly ash. A 99% removal of ash is assumed here, so that 2.9×10^3 Te/yr of ash is emitted to the atmosphere; the remainder, 2.59×10^5 Te/yr, becomes part of the solids in the slurry leaving the scrubbing system. The quantities of water which are used in the present model are indicated in Table 8.3.

TABLE 8.3

Water Used in the Scrubbing System

Item	Value in Kellog model[1] based upon 2.85×10^6 Te/yr of dry coal input to power plant	Value of 1000 Mw(e) power plant, with 3.27×10^6 Te/yr of dry coal input
Make-up water	1794 gal/min	3.19×10^6 Te/yr
Recycled water	2206 gal/min	3.93×10^6 Te/yr
Evaporated water (from settling pond)	6.2×10^5 lb/hr	2.11×10^6 Te/yr

The total quantity of solid wastes indicated on the flowsheet is 7×10^5 Te/yr. These wastes consist of 285,000 Te of recovered fly ash, and 415,000 Te of $CaSO_4$ and $Ca(OH)_2$ from the limestone scrubber. The 415,000 Te/yr of solid wastes generated due to SO_x removal represent an increase of 160 percent over the quantity of solid wastes calculated in Chapter 3 for coal combustion without flue gas desulfurization.

The settling pond may serve as the storage area for the large amounts of solid wastes in the liquor extract leaving the scrubber. The slurry must be discharged to new settling areas as the ponds fill, or the settled solids can be recovered and piled for separate storage. The required settling-storage volume is about 182 acre-feet per year, equivalent to 18 acres for a 10-foot depth. Groundwater contamination by acidic leach water can be a problem with the settling pond and storage of separated solids. If the limestone used for injection into the boiler is dolomite, the contained magnesium will follow the calcium in the process and will appear in the recovered solids. Since $MgSO_4$ is more soluble than $CaSO_4$, it will more readily enter the goundwater and surface-leach water. Settling ponds and storage areas may require impermeable materials to avoid environmental contamination.

Environmental releases involved in waste heat rejection and liquid releases for plant operation are identical to those identified for the basic coal-plant flowsheet (Figure 3.1).

REFERENCES

1. M.W. Kellogg Co., Evaluation of SO_2 - Control Processes, Tast No. 6, Final Report, PB204711, EPA Contract No. CPA 70-63 (October, 1971).

2. M.W. Kellogg Co., Detailed Cost Breakdown for Selected Sulfur Oxide Control Processes, Tast No. 7, Final Report, RED-72-1268, EPA Contract NO. CPA 70-68 (March, 1972).

3. Tennessee Valley Authority, Sulfur Oxide Removal from Power Plant Stack Gas-Use of Limestone in Wet Scrubbing Process, TVA Conceptual Design Study (1969) Final Report, Contract No. TV-29233A.

4. Pollock, W.A., J.P. Tomany, and G. Frieling, Mech. Ang. 89 (8), 21 (1967).

5. Radian Corp., A Theoretical Description of the Limestone Inspection Wet Scrubbing Process, Final Report on Contract No. CPA 22-69-138, Vol.I (June, 1970).

6. Battelle Memorial Institute, Investigation of the Limestone - SO_2 Wet Scrubbing Process, Final Report, Contract No. PH86-68-84, Task Order No. 17 (November, 1969).

7. Tennessee Valley Authority, Sulfur Oxide Removal from Power Plant Stack Gas Sorption by Limestone for Lime-Dry Process, Conceptual Design Study (1968).

9. ELECTRICAL POWER FROM GEOTHERMAL STEAM

9.1 Introduction

The fuel cycle flowsheet for the generation of 1000 Mw(e) from geothermal steam energy sources, shown in Figure 9.1, is based upon the technology used at the Geysers Geothermal Project of the Pacific Gas and Electric Company in Sonoma County, California. Low pressure steam, typically at 114 psig, 1200 Btu/lb and 355°F, is extracted and piped from several nearby geothermal wells and flows into a low-pressure turbine for power generation. The expanded steam is condensed by direct contact with water from an evaporative cooling tower. About 84% of the condensed steam serves as make-up water for the evaporative cooling system, and the remaining 16% of the condensate is returned as blowdown water to separate injection wells in the geothermal field. Evidently there is sufficient underground water supply to meet the water requirements for steam production.

The electrical capacity of each generating unit and its associated steam-supply wells is limited by the physical arrangement of steam piping. The present conceptual design of the 1000 Mw(e) facility consists of ten generating units, each with a capability of 100 Mw(e). Operating data on 55 Mw(e) units are available from the Geysers field[1]. A new unit in the range of 100 Mw(e) was installed in 1974, bringing the total plant capacity up to about 500 Mw(e). On the basis of these data, the overall plant efficiency of the 100 Mw(e) conceptual design is 15.7%, requiring 7.25×10^7 Te/yr of geothermal steam to deliver 8.76×10^9 kwh of electrical product at 100% capacity factor.

FLOW QUANTITIES ARE STATED IN METRIC TONNES / YEAR
UNLESS OTHERWISE INDICATED

100% CAPACITY FACTOR

EVAPORATIVE COOLING TOWER FOR WASTE HEAT REJECTION

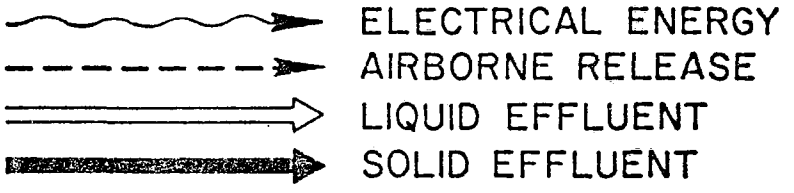

Te = METRIC TONNES
Ci = CURIES
kwh = KILOWATT-HOURS
Mw(e) = MEGAWATTS ELECTRICAL
MPC = MAXIMUM PERMISSABLE CONCENTRATION

Figure 9.1

Geothermal Steam Power Plant 1000 Mwe
Material And Environmental Release Flowsheet

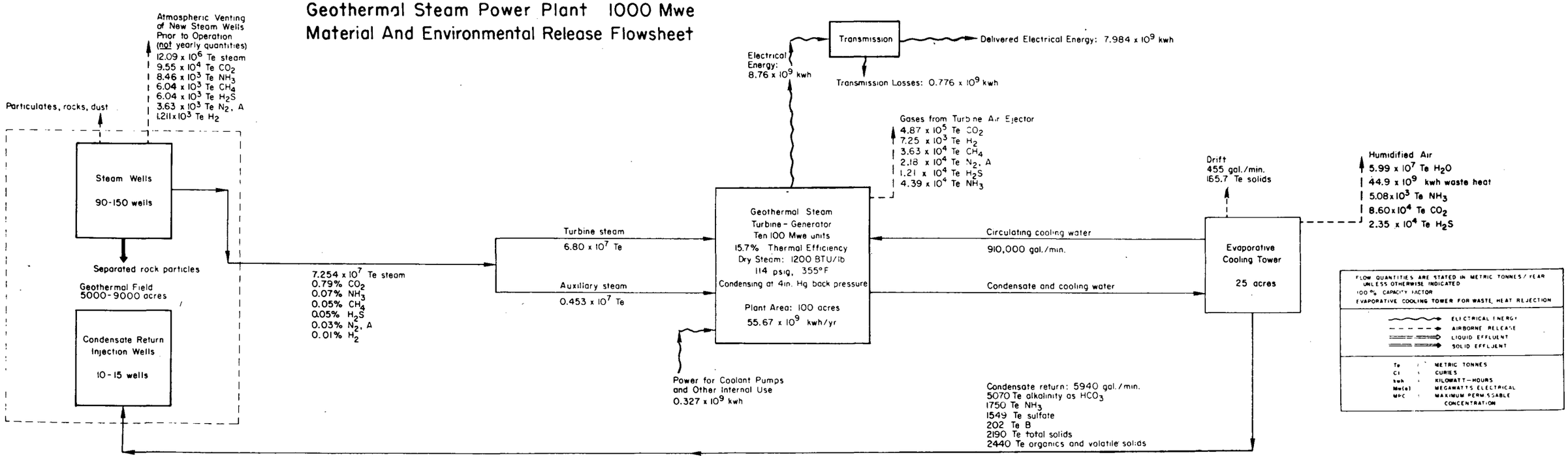

The geothermal steam from the wells carries with it several pollutants, including CO_2, NH_3, CH_4, H_2S, and boron compounds, along with N_2, A, H_2, dust, and gravel. A typical steam analysis is shown in Table 9.1. The solids and particulates are separated before the steam enters the turbine. The more volatile species are emitted with the steam-ejector air vented from the condenser, others are emitted to the air flowing through the evaporative cooling tower, and the less volatile species are returned to the geothermal field via the injection wells.

Table 9.1

Typical Composition of Geothermal Steam[1]

	weight percent
CO_2	0.79
NH_3	0.07
CH_4	0.05
H_2S	0.05
N_2, A	0.03
H_2	0.01

Geothermal energy-conversion fuel cycles can be expected to differ significantly at different locations. For example, in some areas of the country with geothermal potential, such as Southern California, the geothermal wells produce hot brine instead of steam. Energy conversion

would involve flashing the brine to steam or transferring the heat from the brine to a working fluid such as a low-boiling organic, which volatilizes and expands through a turbine and is then condensed and recycled. The material and environmental fuel cycle parameters would, in these cases, be quite different from those shown in the present flowsheet. Further, since deposits from the hot brine are highly corrosive, frequent replacement of existing types of heat exchangers would be required.

9.2 Geothermal Steam-Extraction Wells

The wells supplying a single turbine-generator unit are generally located in the land area surrounding each generating unit. The entire Geysers development is comprised of a number of such adjacent areas in the geothermal field.

There is considerable variation in the steam production capability of each well. A typical rate of 200,000 lb/hr from the newer wells is reported[1]. To furnish the annual steam requirement of 7.25×10^7 Te/yr for the 1000 Mw(e) conceptual design, about 91 such wells would be required. However, in the existing field, about 6 to 8 wells of earlier vintage supply steam for the 55 Mw(e) unit, and this scales to about 150 wells for the present flowsheet.

The land area associated with the wells fueling the 55 Mw(e) unit at Geysers averages about 58 acres per well. This scales to about 5000 to 9000 acres for the 90 to 150 steam-producing wells estimated for the 1000 Mw(e) installation.

When a new well is to be brought into production it is first proved by venting to the atmosphere for a few weeks. Assuming venting for 2 months at the full

production rate expected for power generation and with a steam composition given in Table 9.1, the atmospheric discharges are calculated and listed in Figure 9.1. These are not yearly quantities, and are to be considered to occur once in the generating-plant lifetime, assuming that a producing well has a production life as long or longer than the life of the generating plant. Some audible sound would be expected to accompany the venting operations.

9.3 Turbine-Generator Operation

Of the 7.25×10^7 Te/yr pf geothermal steam required for the 1000 Mw(e) conceptual plant, 6.2% is required for auxiliary purposes, primarily to operate the ejectors which remove noncondensable gases from the condenser[1]. The remainder of the steam expands through a low-pressure turbine and condenses at a pressure of 4 inches of Hg (abs.). About 3.6% of the electrical power generated is used to operate coolant pumps, cooling tower blowers, and other plant equipment[1].

9.4 Air-Ejector Effluents

The noncondensable gases removed continuously by the steam ejector are released to the atmosphere. All the methane, argon, and hydrogen in the geothermal steam are released at this point, as are 85% of the CO_2, 87% of the NH_3, and 33% of the H_2S. These release fractions, and the calculated yearly releases, are given in Table 9.2.

Table 9.2

Yearly Quantities of Non-Condensable Gases

Emitted from Turbine Air Ejectors

Gas	Gas emitted by air ejector as percentage of gas in geothermal steam to power plant[2]	Yearly quantities emitted from 1000 Mw(e) power plant Te/yr
CO_2	85%	487,000
NH_3	87%	43,900
CH_4	100%	36,300
H_2S	33%	12,100
N_2, A	100%	21,800
H_2	100%	7,250

9.5 Cooling System

The steam condensed in the contact condenser and the steam ejector condensate join the cooling water circulating between the condenser and the evaporative cooling tower. The circulating coolant increases 38°F in temperature as it passes through the condensers, requiring a total circulating flow for the 1000 Mw(e) conceptual plant of 910,000 gal/min. The total evaporation rate in the cooling tower is estimated to be 30,200 gal/min. A drift carryover of 0.05% of the circulating flow is assumed (cf. Section 4.2). The remainder of the steam condensate flows at a rate of 5940 gal/min into injection wells in the geothermal field, thereby serving as blowdown water to control the accumulation of non-volatiles in the circulating coolant.

About 15% of the CO_2 and 10% of the NH_3 in the geothermal steam follow the steam condensate and are volatilized in the cooling tower. About two thirds of the H_2S in the geothermal steam follows the condensate, and most of this is volatilized in the cooling tower. The remainder is reduced to sulfur and non-volatile sulfur compounds, which are returned with the blowdown condensate to the geothermal field. The quantity of H_2S volatilized in the cooling tower in the present flowsheet is calculated from a material balance on sulfur in the geothermal steam.

9.6 Disposal of Condensate Blowdown

The typical composition of the condensate returned to the geothermal field, and the calculated yearly quantities for the 1000 Mw(e) conceptual plant, are given in Table 9.3.

Table 9.3

Composition and Yearly Quantities in Condensate Return Water

Item	Concentration in condensate return[3] mg/liter	Yearly quantity for 1000 Mw(e) plant Te/yr
total alkalinity as HCO_3^-	429	5070
ammonia	148.3	1750
sulfide	2.0	23.6
sulfate	131.2	1549
free sulfur	8.35	98.6
nitrate	0.1	1.18
chloride	3.5	41.3
calcium	5.3	62.6
magnesium	1.0	11.8
silica	3.75	44.2
boron	17.1	202
total solids by evaporation	185.2	2190
organics and volatile solids	206.3	2440

On the basis of an estimated capacity of 1 million gallons per day for a single large injection well[5], the 1000 Mw(e) conceptual design would require about ten such wells for disposal of the condensate return.

9.7 Power Plant Land Area

The land requirement for the 1000 Mw(e) power plant, not including the land estimated previously for the geothermal wells, is about 100 acres, scaled from 2.5 acres for a 27 Mw(e) unit at Geysers[4].

REFERENCES

1. Finney, J.P., F.J. Miller, and D.B. Mills, "Geothermal Power Project of Pacific Gas and Electric Company at the Geysers, California," presented at the IEEE Power Engineering Society Summer Meeting (July 1, 1972).

2. McClure, H.K., Pacific Gas and Electric Company, Private Communication (October 12, 1972).

3. Ham, W.C., "Materials and Corrosion, Geysers Geothermal Power Plant," presented at National Association of Corrosion Engineers Conference, San Francisco, California (October 1, 1972).

4. Bruce, A.W. and D.B. Barton, Pacific Gas and Electric Company Mechanical Engineering Department, "Natural Steam Power Doubled by Unit 3 at the Geysers in California," (September, 1967).

5. Goldsmith, M., "Geothermal Resources in California; Potentials and Problems," California Institute of Technology, Environmental Quality Laboratory Report No.5, p.29 (December, 1971).

10. ELECTRICAL POWER FROM URANIUM-PLUTONIUM FUELED BREEDER REACTOR

10.1 Reactor Characteristics and Fuel Requirements

The fuel cycle flowsheet for a representative breeder reactor is shown in Figure 10.1. The flowsheet quantities are representative of a 1000 Mw(e) plant operating on a near-equilibrium fuel cycle, such that uranium and plutonium recovered from the discharge fuel are recycled and blended with natural or depleted make-up uranium and fabricated into fresh fuel. The equilibrium fuel cycle is attained only after several years of operation. During the first few years the entire uranium and plutonium in the fresh fuel must be obtained from outside sources, i.e., about 25 tonnes per year of natural or depleted uranium are required, and about 2.1 tonnes per year of plutonium must be obtained from the discharge fuel of water reactors or from the net plutonium product from other fast breeders which have reached their equilibrium fuel cycle.

The overall thermal efficiency of 41% is based upon data on the expected performance of a 1000 Mw(e) liquid-metal fast-breeder reactor[3] (LMFBR). The reactor core is composed of stainless-clad PuO_2 - UO_2 fuel containing 12.6 tonnes of plutonium and uranium. The core fuel operates at an average specific power of 174 Mw(t) per tonne of uranium-plutonium mixture. Core fuel is discharged after an average thermal exposure of 80,000 Mw days per tonne, corresponding to core-fuel operating life of 460 full-power days. About 10 tonnes of core fuel are discharged yearly for reprocessing (at 100% load factor).

FLOW QUANTITIES ARE STATED IN METRIC TONNES / YEAR UNLESS OTHERWISE INDICATED

100% CAPACITY FACTOR

EVAPORATIVE COOLING TOWER FOR WASTE HEAT REJECTION

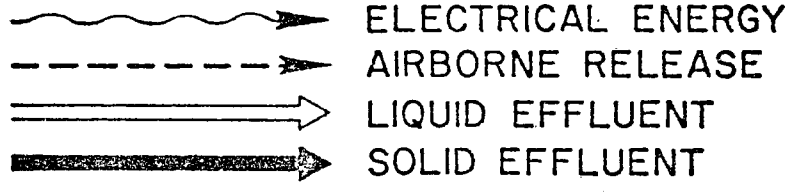

Te	=	METRIC TONNES
Ci	=	CURIES
kwh	=	KILOWATT-HOURS
Mw(e)	=	MEGAWATTS ELECTRICAL
MPC	=	MAXIMUM PERMISSABLE CONCENTRATION

Figure 10.1

Breeder Reactor Nuclear Power Plant 1000 Mwe
Material and Environmental Release Flowsheet

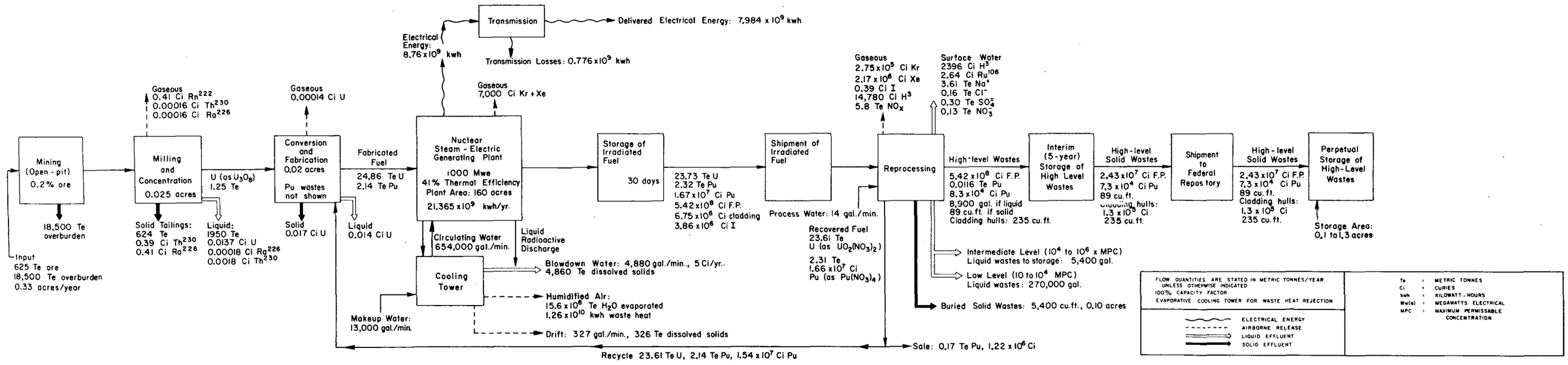

Surrounding the core is a blanket containing about 29 tonnes of uranium, a small fraction of which will have been converted to plutonium by absorbing neutrons which diffuse into the blanket from the core.

The total radioactivity in the yearly amount of fuel discharge, at the time of discharge, is greater for the fast breeder reactor than for the light-water plant because of the more frequent replacement core fuel in the breeder*.

Heat and fission products are generated in the blanket by fast-fission in U^{238} and by fission of plutonium that has been formed. Periodically, blanket elements are discharged to recover the plutonium, to be recycled as core fuel.

The total discharge rate of core and blanket fuel is 27 tonnes per year, containing 2.32 Te/yr of plutonium, with plutonium radioactivity of 28 million curies, at the time of discharge.

10.2 Cooling Irradiated Fuel

It is planned[3] that fast-breeder fuel will be stored for 30 days at the reactor before it is shipped for reprocessing. This is shorter than the 150-day storage period planned for light-water nuclear plants because of the economic incentive to minimize plutonium inventories in the fast-breeder fuel cycle. The yearly amounts of plutonium in the fast-breeder fuel cycle are about eight-fold greater than in the light-water nuclear

---

* These flowsheets are based on an estimated average core fuel life of 460 full-power days for the breeder and 3 years for the light-water reactor.

plant, when the latter is fueled with slightly enriched uranium without plutonium recycle. The greater the fuel cycle inventory, the longer the fast-breeder must operate on purchased plutonium make-up fuel before it can reach its equilibrium fuel cycle. Therefore, there is considerable incentive to reduce holdup time in all the fast-breeder fuel-cycle operations. This introduces new problems in fuel reprocessing because of the large amount, 3.86 million curies/yr, of radioactive iodine fission products remaining after 30 days.

Shorter cooling also results in about a four-fold greater amount of radioactivity in the shipped fast breeder fuel. This increases the shielding requirement for shipping containers and the rate of heat-generation in the fuel due to radioactive decay. Even for the same cooling time, the heat generation rate in shipped fast-breeder core fuel, per unit mass of fuel, is about six times greater than in light-water fuel, because of the higher average specific power at which the breeder core fuel operates. Shipping short-cooled breeder core fuel will impose more stringent requirements for shipping-container design than for water-reactor fuel.

10.3 Radiological Releases from Reactor

The radiological releases for the liquid-metal fast breeder are difficult to predict at this time. According to the environmental statement[3] for the proposed 360 Mw(e) LMFBR demonstration plant, noble-gas radionuclides released into the sodium cover gas system* will be separated by a process

* The cover gas may also contain 1.83-hr A^{41} resulting from neutron activation of argon.

such as cryogenic distillation, bottling, and storage. However, for the present flowsheet a noble gas release of 7000 Ci/yr is assumed, which will meet the expectation[3] of a release resulting in a site-boundary dose of less than one percent of natural background.

It is likely that radioiodine releases might be quite small because iodine fission products escaping from fuel rods will react with sodium coolant to form NaI.

The total rate of tritium production is somewhat greater in a fast-breeder reactor than in a light-water reactor*, and more tritium is expected to escape from fuel into the coolant because of the use of stainless steel fuel cladding and the higher cladding temperatures. However, once in the coolant, the tritium reacts with sodium to form sodium tritide, most of which will be removed in the cold-trap filter system for purification. No environmental releases of tritium at the reactor plant are projected in the LMFBR Demonstration Plant environmental statement[3]. However, a liquid release of 16 Ci/yr of tritium is estimated for the 400 Mw(t) FFTF** reactor now under construction. This scales to about 100 Ci/yr of tritium from the 1000 Mw(e) fast breeder in the present flowsheet. No non-tritium radioactive liquid effluents are indicated in the Demonstration Plant environmental statement[3]. The described process of evaporation and ion exchange is effective in concentrating wastes for solidification and storage as solids. For the purpose

---

* It is estimated that 25,000 Ci/yr of tritium is produced from fission in the 1000 Mw(e) fast breeder.

** Fast Flux Test Facility, a sodium-cooled fast-spectrum reactor designed to test fast-breeder fuel.

of the present flowsheet, 5 Ci/yr is assumed, typical of radioactive effluents from light-water plants with similar liquid-waste management systems.

Neutron absorption in the sodium coolant results in about 70 million curies of 14.96-hr Na^{24} and 600 curies of 2.62-yr Na^{22}. Sodium leaks and spills are of some concern, and if the spilled sodium contacts air it can oxidize to an aerosol containing activated sodium, fission products, and other radionuclides which may be present in the sodium. Extensive precautions are taken to prevent spills and to minimize the chances of anything but chemically inert gas coming into contact with sodium. No releases of radioactive sodium are projected for the LMFBR Demonstration Plant[3] or for normal operation of the FFTF[4], and no sodium releases are indicated on the present flowsheet.

The 1000 Mw(e) fast breeder reactor will contain about 1.8 to 2.8 tonnes of plutonium[3] corresponding to 2.2 to 3.5 million curies* of plutonium. No environmental releases of plutonium are projected for the LMFBR Demonstration Plant[3] or for normal operation of the FFTF[4], and none are indicated in Figure 10.1.

10.4 Mining, Milling and Fuel Fabrication

Environmental quantities associated with mining and milling natural uranium make-up fuel for the equilibrium breeder fuel cycle are based upon data presented in Section 2.2 and 2.3, scaled according to uranium throughput.

---

* Including radioactivity of 4.98-hr Pu^{243}.

Mining and milling would be eliminated if the make-up uranium were obtained from the presently stored depleted UF_6 tails from isotope separation plants. Alternatively, the make-up uranium could be obtained from the depleted tails produced in a system generating electrical power from reactors operating on enriched uranium make-up fuel as well as from breeder reactors.

Environmental effluents associated with UF_6 conversion and isotope separation and the associated electrical energy consumption are not present in the equilibrium breeder flowsheet.

Fabrication effluents are based upon data on UO_2 fabrication in Section 2.6, scaled according to uranium throughput. Limestone neutralization of fluorides is not present here because of the elimination of processes requiring UF_6. No plutonium effluents are indicated for the fabrication operation because of lack of data on plutonium losses. As explained in Section 2.12, the fractional losses of plutonium must be kept extremely small, and this problem is even more acute in fabricating breeder fuel because of the larger quantities of plutonium involved.

10.5 Shipment of Irradiated Fuel

The short 30-day cooling period (cf. Section 5.2) for irradiated fuel introduces special considerations in the design of shipping containers. Otherwise, the environmental considerations of shipping appear to be similar to those discussed in Section 2.8.

10.6 Fuel Reprocessing

The technology contemplated for reprocessing breeder core and blanket fuel is basically the same as that involved in processing water reactor fuel. One new consideration does result from the considerably higher fissile content of fuel discharged from the breeder core, requiring more stringent precautions to avoid criticality during dissolution and during the early stages of chemical separation. Another consideration arises from the relatively large amount (3.86 million curies/yr) of radioiodine fission products remaining after 30 days of cooling*. An overall iodine decontamination factor of only 1000, as was assumed for light-water reactor fuel reprocessing, would be completely inadequate here. Additional iodine recovery technology, such as that discussed in Section 2.9, must be installed**, and it is planned to incorporate such technology when LMFBR demonstration fuel is reprocessed[3]. It is projected[2] that with this additional technology an overall iodine decontamination factor of about 10^7 can be achieved, resulting in an estimated iodine release of 0.386 Ci/yr.

In Section 2.9 several new chemical processes which could be applied, if needed, to reduce effluents of noble gas radionuclides and tritium at fuel reprocessing plants are discussed. The environmental statement[3] for the LMFBR Demonstration Plant indicates that these new chemical processes will be applied to reprocessing demonstration-plant breeder fuel as well as to

---

* Water-reactor fuel cooled 150 days contains 61 curies/yr of radioiodine, as shown in Table 2.1.

** One alternate to incorporating additional iodine recovery technology is to cool the discharge fuel for a longer period.

the later reprocessing of fuel from 1000 Mw(e) breeders, resulting in the reduction in concentration by a factor of 100 for noble-gas radionuclides and 10 for tritium.

However, it is not apparent why, in reprocessing breeder fuel, there should be any incentive to reduce noble-gas radionuclide releases and tritium releases below the levels now acceptable for light-water reactor fuels. There is, in fact, somewhat less Kr^{85} produced in the breeder fuel (275,000 Ci/yr) than in the water-reactor fuel (373,000 Ci/yr) and the tritium production is only slightly greater in the breeder. If there is incentive to reduce releases of Kr^{85} and H^3 at fuel reprocessing plants, it would apply equally well to water reactors and breeder reactors, and the technology would be essentially the same*. Therefore, the present flowsheets show all Kr^{85} and H^3 released to the environment at the fuel reprocessing plant for both the breeder reactor and the light-water reactor.

The remaining environmental effluents for breeder fuel reprocessing are calculated according to data in Section 2.9 scaled according to fuel throughput.

10.7 Management of High Level Radioactive Wastes

The technology and environmental quantities associated with the management of high-level wastes from fast-breeder fuel reprocessing are very much the same as those described in Section 2.10. The fission-product quantities

---

* Recognizing some differences in H^3 recovery by voloxidation because of differences in fuel cladding and fuel composition.

are calculated specifically for the fast breeder plant[1,2]. The volumes of wastes are scaled on the basis of total fission product mass[2].

Assuming that 0.5% of the plutonium processes remains with the high-level wastes[2], the breeder high-level wastes will contain about eight times more plutonium than the high-level wastes from the light-water plant.

As in the case of water reactors, plutonium is one of the main contributors to radioactivity in high-level waste after a few hundred years of storage (cf. Figure 2.4). For shorter storage periods, e.g., 100 years, Cs^{137} and Sr^{90} are the most significant contributors to total radioactivity. As compared with the light water nuclear plant, the fast breeder is calculated to produce 20 percent less Cs^{137} and over 50% less Sr^{90}.

10.8 Accidental Environmental Releases

Estimates of accidental environmental releases are not included because of lack of meaningful data and analyses (cf. Section 2.11).

REFERENCES

1. Arnold, E.D., Phoebe-A Code for Calculating Beta and Gamma Activity and Spectra for ^{235}U Fission Products, ORNL-3931, USAEC (July, 1966).

2. Siting of Fuel Reprocessing and Waste Management Facilities, ORNL-4451 (USAEC) (July, 1970).

3. U.S. Atomic Energy Commission, Environmental Statement for Liquid Metal Fast Breeder Reactor Demonstration Plant, WASH-1509 (April, 1972).

4. U.S. Atomic Energy Commission, Environmental Statement, Fast Flux Test Facility, Richland, Washington, WASH-1510 (May, 1972).

11. ELECTRICAL POWER FROM SOLAR ENERGY*

11.1 Introduction

The fuel cycle flowsheet shown in Figure 11.1 illustrates one of the proposed means of converting solar energy to electrical energy. Based upon a concept proposed by Meinel[1], solar energy incident upon flat plate energy collectors heats liquid sodium-potassium alloy (NaK) to about 200°C. The circulating hot liquid metal transports the collected solar heat to a boiler where low-pressure steam is generated. The steam expands through a low-pressure turbine and is condensed by water coolant circulating from the condenser to an evaporative cooling tower. The quantity of sodium-potassium alloy which is used provides sufficient energy storage for continous power generation.

The net electrical output from the power plant is 4.7% of the solar energy incident upon the collectors, requiring an annual incident solar energy of 1.865×10^{11} kwh(t) for a 1000 Mw(e) conceptual power plant operating at 100% load factor.

11.2 Solar Energy Collection

The solar energy collectors are designed to maximize the transmission of incident solar energy to the NaK coolant and to minimize the energy loss due to radiation from the heated coolant. The high absorptivity collector plates are housed in evacuated containers of glass or other transparent material. The plates are assumed to have an absorptivity of

* Chapter 11, Solar Energy, describes a particular distributed-collector thermal conversion system. Since 1973, when Chapter 11 was written, studies have indicated that a central-tower conversion system is expected to be more advantageous than the distributive system which is described here. Teknekron, Inc. has presented quantitative information on the environmental releases from a 100 MWe intermediate-load central-tower thermal conversion system in a later report. See "Pollutant Releases, Resource Requirements, Costs and Efficiencies of Selected New Energy Technologies", for the Brookhaven National Laboratory, December 1975.

FLOW QUANTITIES ARE STATED IN METRIC TONNES / YEAR UNLESS OTHERWISE INDICATED

100% CAPACITY FACTOR

EVAPORATIVE COOLING TOWER FOR WASTE HEAT REJECTION

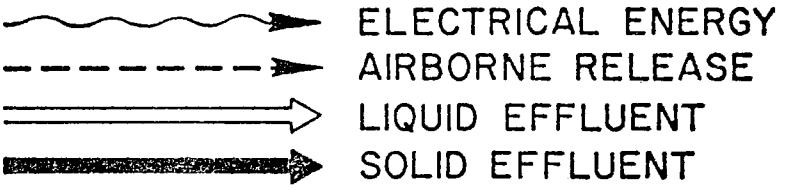

Te	=	METRIC TONNES
Ci	=	CURIES
kwh	=	KILOWATT-HOURS
Mw(e)	=	MEGAWATTS ELECTRICAL
MPC	=	MAXIMUM PERMISSABLE CONCENTRATION

Figure 11.1

Solar Power Plant 1000 Mwe
Material And Environmental Release Flowsheet.

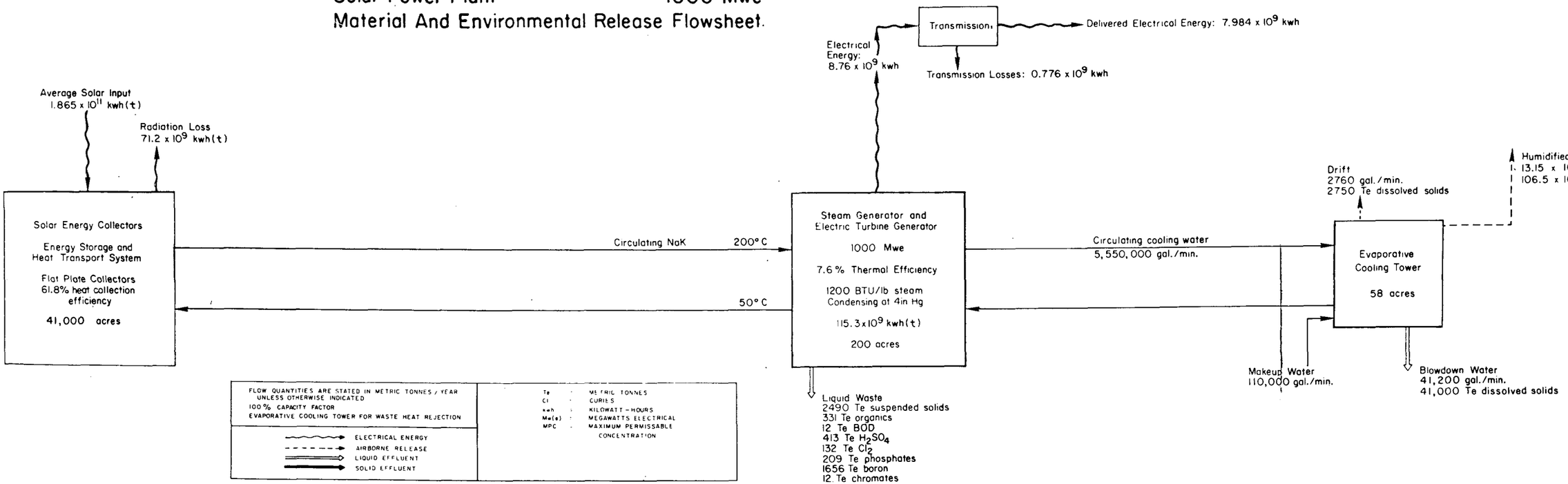

0.93 for the incident solar spectrum, a low-temperature emissivity of 0.10, and a back-side emissivity of 0.08[2]. Analyses by Hottel and Howard[2], taking into account radiant energy absorption and re-emission and the time-dependence of the angle of solar incidence, predict an overall heat collection efficiency of 61.8%. The incident energy not collected is re-radiated.

For the average daily solar energy input at a location such as El Paso, Texas, the average rate of collection of thermal energy is estimated to be 0.155 thermal kilowatts per square meter of collector surface. For the 1000 Mw(e) conceptual power plant this corresponds to a collector area of 32.7 square miles. Assuming the actual land area required for the collectors and primary heat transfer system is twice the collector area[2], a total land area of about 65 square miles or 41,000 acres is required for energy collection and transport.

11.3 Turbine Generator Operation

Assuming, optimistically, that saturated steam is generated at the NaK temperature of 200°C and expands through a turbine to a condenser pressure of 4 in. Hg (abs.), about 7.6% of the collected thermal energy is converted to electrical energy. It is assumed that all of the generated electrical energy appears as the electrical product.

The only significant chemical wastes expected are those associated with boiler blowdown. An estimate is obtained by scaling the yearly quantities reported (cf. Section 3.8) for the fossil fuel power plants on the basis of the power plant thermal input. The results are shown in Table 11.1.

Table 11.1

Boiler Blowdown Releases

	Annual quantity released by 1000 Mw(e) solar power plant Te/yr
suspended solids	2490
organics	331
BOD	12
$H_2 SO_4$	413
Cl_2	132
phosphates	209
boron	1656
chromates	12

Environmental releases may be associated with the NaK system, but no estimates are currently available.

A land area of 100 to 200 acres is assumed to be required for the generating equipment[3].

11.4 Cooling System

A total of 106.5×10^9 per year of thermal energy is rejected from the condenser to an evaporative cooling system. Scaled from the data in Section 6.2, about 5,500,000 gal/min of circulating water and 110,000

gal/min of make-up water are required, with about 58 acres allotted for the cooling system.

11.5 Electrical Energy Transmission

There would be a considerable premium on locating solar energy power plants in areas where high average solar input could be relied upon. This might then require more extensive transmission systems than for other types of power plants.

REFERENCES

1. Meinel, A. B. and M. P. Meinel, "Is It Time fo a New Look at Solar Energy," Bulletin of the Atomic Scientists 27:3, pp. 32-37 (October, 1971).

2. Hottel, H. C. and J. B. Howard, "New Energy Technology, Some Facts and Assessments," MIT Press (1971).

3. "Considerations Affecting Steam Power Plant Site Selection," Energy Policy Staff, Office of Science and Technology, Washington, D.C. (December, 1968).

12. ELECTRICAL POWER FROM THERMONUCLEAR FUSION

12.1 Energy Producing Reactions

The flowsheet shown in Figure 12.1 is based upon the conceptual design of a fusion power plant described by Steiner and Fraas[1], extrapolated to an electrical power production of 1000 Mw(e). The fusion reactions assumed are[2]:

$$H^2 + H^3 = He^4 + n^1 \qquad 1.92 \times 10^{11} \text{ n/sec per watt thermal}$$

$$H^2 + H^2 = He^3 + n^1 \qquad 2.95 \times 10^{10} \text{ n/sec per watt thermal}$$

The reacting core is surrounded by a lithium blanket, where make-up tritium for the core is produced according to the reactions

$$Li^6 + n^1 = H^3 + He^4$$

$$Li^7 + n^1 = H^3 + He^4 + n^1$$

The tritium production rate quoted by Steiner[2] is equivalent to a production rate of 2.16×10^{11} atoms of tritium per watt thermal.

12.2 Power Conversion

The Steiner-Fraas[1] design contemplates heat extraction from the blanket by boiling potassium. The potassium vapor expands through a turbine and

FLOW QUANTITIES ARE STATED IN METRIC TONNES / YEAR
UNLESS OTHERWISE INDICATED

100% CAPACITY FACTOR

EVAPORATIVE COOLING TOWER FOR WASTE HEAT REJECTION

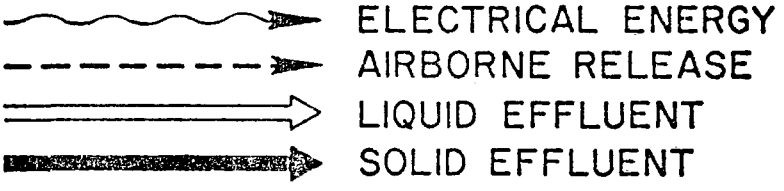

Te	=	METRIC TONNES
Ci	=	CURIES
kwh	=	KILOWATT-HOURS
Mw(e)	=	MEGAWATTS ELECTRICAL
MPC	=	MAXIMUM PERMISSABLE CONCENTRATION

Figure 12.1

Fusion Reactor Nuclear Plant 1000 Mwe
Material And Environmental Release Flowsheet

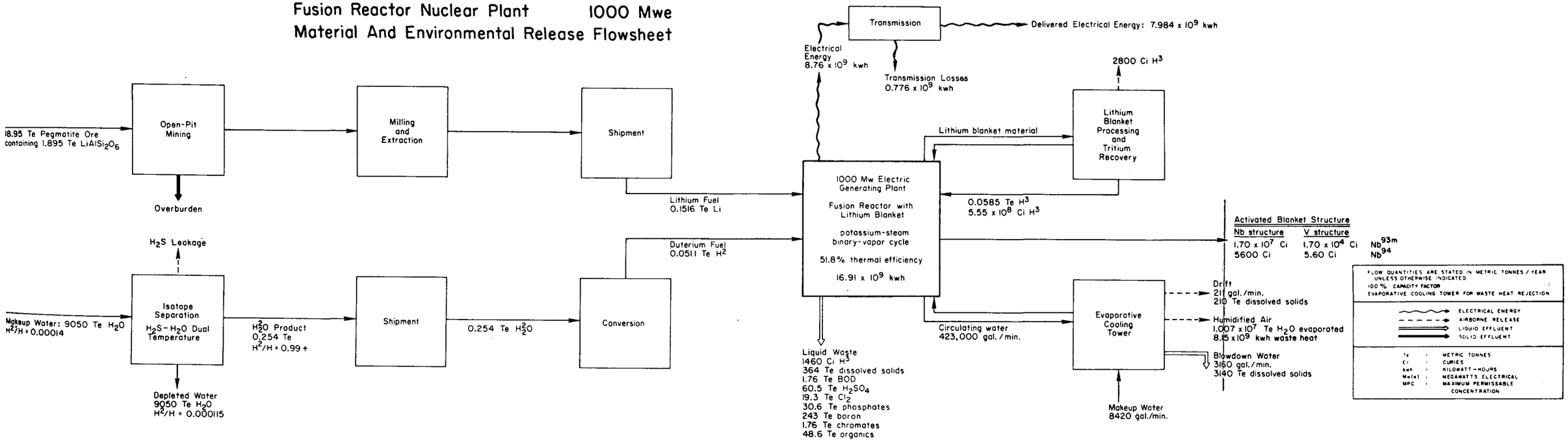

is condensed by boiling water. The high-pressure steam expands through a conventional turbine. The calculated overall thermal efficiency of this dual cycle is 51.8%.

The steam condenser is cooled with water from the model evaporative cooling system, scaled to the heat rejection load for this cycle.

12.3 Fuel Materials

The quantities of deuterium and lithium consumed per year are calculated from the reaction rates quoted above. The deuterium fuel can be obtained from electrolytic decomposition of heavy water with an isotopic composition of over 99% H^2. The heavy water shipped to the power plant is obtained from a deuterium isotope-separation plant, which is assumed to operate on the dual-temperature process involving the isotopic exchange reaction between gaseous hydrogen sulfide and liquid water[3]. The water fed to the isotope-separation plant is assumed to contain the natural isotopic abundance of 0.014 percent deuterium in hydrogen. A typical recovery[3] of 18% of the deuterium in the feed is assumed.

It is assumed that the blanket is designed so that the ratio of lithium isotopes in the blanket is the same as for natural lithium (7.52% Li^6) and that the reaction rates are such that the relative concentrations of Li^6 and Li^7 remain the same as in natural lithium. Otherwise lithium isotopic separation and/or withdrawal of depleted lithium from the blanket may be required, resulting in a larger net requirement for natural lithium. With these assumptions, the make-up lithium is calculated as the molar equivalent to the tritium production rate.

Lithium ore requirements are calculated on the basis of mining pegmatite ore with an assumed concentration of 10 percent spodumene ($LiAlSi_2O_6$)[4]. The pegmatite ore containing spodumene is typically mined from 20-foot benches in a large open pit. The spodumene is recovered by crushing, screening, milling, and flotation. Extraction of lithium from spodumene involves either acid treatment or alkali treatment. Acid treatment involves calcining followed by sulfuric acid addition. The lithium sulfate is leached, neutralized with limestone, and filtered. It is then brought into water solution, precipated with soda ash, converted to the chloride by reacting with hydrochloric acid, and electrolyzed to metallic lithium.

Alkali extraction involves calcination of spodumene with limestone and hydrolyzing the calcined product with steam to produce lithium hydroxide. This is converted to the chloride and electrolyzed to metallic lithium.

Techniques of lithium isotope separation are described in Reference (3).

12.4 Tritium Losses

Steiner and Fraas[1] estimate a total tritium inventory of 6 kg. in their conceptual design of a 1000 Mw(t) fusion power plant, including 0.4 kg. of tritium in the lithium and potassium systems. They estimate that leakage of gaseous tritium from the lithium and potassium systems can be kept as low as 10^{-6} of the contained tritium per day, corresponding to a leakage fraction of 7×10^{-8}/day based on the total tritium inventory. The

estimated leakage of tritium from the potassium system into the steam cycle, and ultimately into the plant cooling water, is 3 curies per day, which corresponds to a leakage fraction of 5×10^{-8}/day of the total tritium inventory.

Scaling these estimates to the present 1000 Mw(e) plant design, the total tritium inventory is 11.6 kg, or 1.1×10^{8} curies. The tritium leakage to the environment is 2820 curies per year of gaseous tritium and 2110 curies per year of tritium in liquid wastes.

These tritium releases are lower than the corresponding leakage fractions of tritium in water reactors. The total curie inventory of fission-product tritium in a water reactor is about 20,000 curies (cf. Section 2.7). The quoted leakage rate of about 100 curies per year for a boiling water reactor corresponds to a daily leakage fraction of 10^{-5}/day. The high operational temperatures contemplated for lithium blanket systems in fusion power plants and the finite permeability of structural materials to hydrogen at high temperature may make tritium containment difficult. For example, Fraas suggests tungsten coatings on some structural components to control tritium loss.

12.5 Activated Structural Material

Steiner and Fraas[1] have calculated the radioactive inventories in the structural system of their conceptual fusion reactor. Both niobium and, alternatively, vanadium blanket structures are considered. The principal

neutron activation chains are shown in Table 12.1. The calculated radioactive inventories and the production rate of long-lived species are listed in Table 12.2.

The actual rate of replacement of blanket structure is not yet specified. However, the blanket structure is expected to have a finite useful lifetime in the fusion power plant because of radiation damage. If the rate of blanket-structure replacement is less than the mean life of the long-lived species, the average rate at which these radionuclides are withdrawn from the reactor and sent to processing or disposal is equal to their production rate in the reactor. It is on this basis that the average yearly withdrawal rates of long-lived activated species in the blanket are calculated, and the results of these calculations are shown in the flow diagram.

Table 12.1

Neutron Reactions for Structural Activation in a Fusion Reactor[1]

Niobium Activation

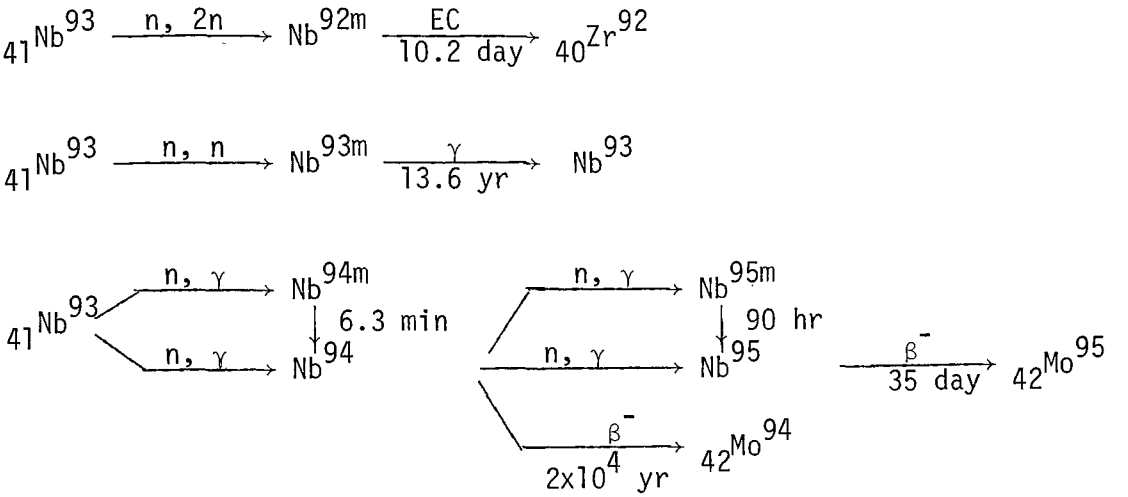

Vanadium Activation

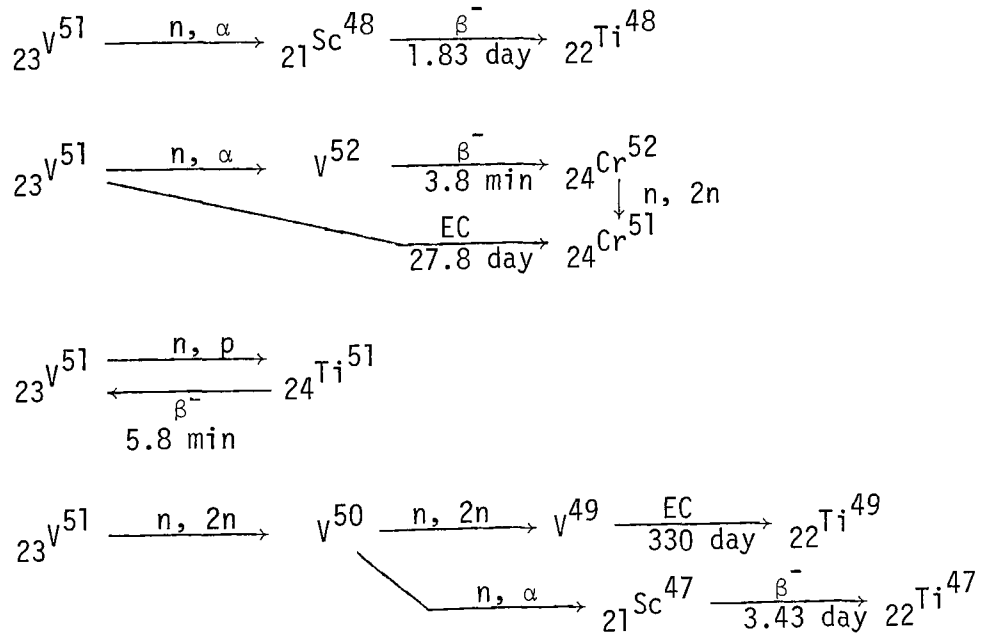

Table 12.2

Radioactivity in Fusion Reactor Blanket Structure

	curies per thermal kilowatt[1]	curies in 1000 Mw(e) fusion plant
Niobium Blanket Structure		
Nb^{95}	155	2.99×10^8
total niobium structure	714	1.38×10^9
Vanadium Blanket Structure		
Sc^{48}	4.20	8.11×10^6
total vanadium structure	55.1	1.06×10^8

		rate of generation of long-lived radionuclides	
nuclide	half life	curies per year per Mw(t)	curies per year in 1000 Mw(e) power plant
Niobium Blanket Structure			
Nb^{93m}	13.6 yr	8,800[1]	1.70×10^7
Nb^{94}	2.0×10^4 yr	2.9[1]	5,600
Vanadium Blanket Structure (assume 1000 ppm Nb)			
Nb^{93m}	13.6 yr	8.8	17,000
Nb^{94}	2.0×10^4 yr	0.0029	5.6

REFERENCES

1. Steiner, D. and A. P. Fraas, "Preliminary Observations on the Radiological Implications of Fission Power," Nuclear Safety 13-5, 353 (September, October, 1972).

2. Steiner, D., "A Review of ORNL Fusion Feasibility Studies," 5th Intersociety Energy Conversion Engineering Conference, Energy 70, Las Vegas, Nevada (September, 1970).

3. Benedict, M. and T. H. Pigford, "Nuclear Chemical Engineering," McGraw Hill (1958).

4. "Mineral Facts and Problems," Bulletin 630, 1965 ed., U.S. Bureau of Mines.

13. ELECTRICAL POWER TRANSMISSION

Two of the many environmental considerations associated with the transmission of electrical power are transmission losses and land required for transmission systems. According to the 1971 annual report of the Federal Power Commission[1], the 1971 production of electrical energy in the United States was 1.53×10^{12} kwh, and the 1971 sale of electrical power was 1.395×10^{12} kwh. This corresponds to an average of 8.8% of the generated power lost or consumed in delivery, resulting in the average yearly loss of 0.776×10^{9} kwh for a 1000 Mw(e) power plant (100% load factor) as shown on the flowsheets.

The Federal Power Commission reported that in 1968 there were over 300,000 miles of transmission lines, of 69 kilovolts or greater, in the United States[2]. The right of way occupied by this transmission system was estimated at 4 million acres. On an industry-wide basis, the average land requirement was 13.3 acres per mile of right of way. The total generating capacity in 1968 was 290,000 Mw(e)[2], which corresponds to an average transmission line distance of 1034 miles per 1000 Mw(e) of generating capability. The above data then led to the estimate of 14,700 acres of land for transmission associated with each 1000 Mw(e) power plant.

Other environmental effects associated with electrical transmission include visual impact, effects resulting from line and tower construction, and ozone production by corona discharge.[3]

REFERENCES

1. United States Federal Power Commission, "Annual Report - 1971," 11-13.

2. "Environmental Effects of Producing Electric Power," Hearings Before the Joint Committee on Atomic Energy, United States Congress (1971).

3. United States Department of the Interior, Bureau of Land Management, "Final Environmental Statement for the Jim Bridger Thermal-Electric Generation Project" (April, 1972).

FUEL CYCLE FOR 1000-Mw URANIUM-PLUTONIUM FUELED WATER REACTOR

Thomas H. Pigford*
Robert T. Cantrell*
and
K. P. Ang*

Teknekron Report No. EEED 104

March, 1975

* *Department of Nuclear Engineering, University of California, Berkeley, California.*

ABSTRACT

This study presents an illustrative data base of material quantities and environmental effluents in the fuel cycle for a light-water nuclear reactor fueled entirely with plutonium and natural uranium. Data were calculated for a 1000 Mw nuclear power plant operating on an equilibrium fuel cycle. Results are shown in tables and on a fuel-cycle flowsheet.

TABLE OF CONTENTS

1. Introduction---------- 1

2. Reactor Characteristics---------- 2

3. Mining, Milling, and Concentration---------- 20

4. Fuel Conversion and Fabrication---------- 28

5. Nuclear Power Plant Operation---------- 27

6. Shipping---------- 27

7. Fuel Reprocessing---------- 28

8. High-Level Waste Management---------- 29

9. Low-Level Actinide Solid Wastes---------- 35

References---------- 37

LIST OF FIGURES

1. Light Water Reactor with Uranium and Recycled Plutonium 1000 Mw(e) Material and Environmental Release Flowsheet---------- 5

2. Actinide Chains in Uranium-Plutonium Fuel---------- 8

3. Fuel Actinide Flowsheet for 1000-Mw U-Pu Fueled Water Reactor Yearly Quantities, 80% Load Factor----------11

4. Americium Activity in High-Level Wastes 1000-Mw U-Pu Fueled Water Reactor---------- 31

5. Curium Activity in High-Level Wastes 1000-Mw U-Pu Fueled Water Reactor---------- 32

6. Plutonium Activity in High-Level Wastes 1000-Mw U-Pu Fueled Water Reactor---------- 33

7. Actinides in High-Level Wastes for U Fueled and U-Pu Fueled Water Reactors---------- 34

LIST OF TABLES

1. Isotopic Composition of Plutonium in Equilibrium Fuel Cycle for 1000-Mw Uranium-Plutonium Fueled Water Reactor---------- 16

2. Radioactivity in Reactor and Fuel Cycle for a 1000-Mw Water Reactor Fueled with Natural Uranium and Recycled Plutonium---------- 17

3. Comparison of Neptunium, Plutonium, Americium and Curium Reprocessed Yearly from Uranium Fueling and Uranium-Plutonium Fueling in 1000-Mw Water Reactors, 150-day Cooling---------- 21

4. Gaseous Effluents from Milling and Concentration of 2000 ton/day of Uranium---------- 22

5. Environmental Emissions for a Mixed-Oxide Fuel Fabrication Plant (300 Mg/yr of Uranium and Plutonium)---------- 26

FUEL CYCLE FOR 1000-Mw WATER REACTOR FUELED WITH PLUTONIUM AND NATURAL URANIUM

1. Introduction

This study presents estimates of environmental effluents from a uranium-plutonium fueled pressurized-water reactor and from the associated fuel cycle operations. The study is based upon an adaption of current designs of uranium-fueled pressurized water reactors.

A number of thermal-electrical power generating technologies were examined in an earlier study for the EPA[1]. The approach followed herein is similar. A flowsheet has been developed for a 1000-Mw nuclear generating plant and its associated fuel-cycle facilities. Representative quantities for material throughput and environmental release are estimated for the operation of the nuclear plant for one year at 80% load factor*. Many of the quantities are the results of original calculations performed for this study. Others are derived from various references and are scaled to the current flowsheet. Variations from the quantities indicated herein may be expected for particular installations.

The flowsheet shows waste-heat rejection at the nuclear power plant by evaporative cooling. Water requirements for the cooling system are developed in Chapter 6 of "Fuel Cycles for Electric Power Generation"[1].

---

* Most of the non-radiological quantities are given in metric tons (Mg). Radiological quantities are given in curies (Ci).

2. Reactor Characteristics

This fuel cycle is calculated for a 1000 Mw pressurized water reactor fueled entirely with a mixture of plutonium and natural uranium. The reactor structure and fuel-coolant lattice is similar to that of the pressurized-water reactor fueled with slightly enriched uranium, as described in Chapter 2 of "Fuel Cycles for Electric Power Generation[1]. The make-up plutonium to fuel the reactor considered in the present study is that recovered from the fuel discharged from uranium-fueled water reactors. This concept of a "dedicated plant", in which the entire reactor is fueled with a mixture of plutonium and natural uranium, is one of the ways in which plutonium recovered from uranium-fueled reactors can be utilized as fuel. This concept has the advantage that all fuel within the reactor consists of the mixture of natural uranium and plutonium. The reactor control absorbers can be designed specifically to match the high neutron absorption cross section of plutonium. It is possible that with fuel fabricated from a single fissile-fertile combination the reactor may be better optimized for power output and in-core fuel management.

An alternate approach towards utilizing plutonium recovered from uranium fuel is to recycle that plutonium in the same reactor, thereby replacing some of the elements of slightly enriched uranium fuel with fuel composed of recycled plutonium and natural uranium. This concept of recycle of "self-generated" plutonium is likely to be a practicable means of beginning the utilization of recycled plutonium in water reactors. It may be possible

to design a fuel assembly consisting of an ensemble of slightly enriched uranium fuel rods and plutonium-uranium fuel rods so that the neutron spectrum and the control absorber worth are not significantly altered by the presence of plutonium. Alternatively, the reactor core may be loaded with some assemblies of slightly-enriched uranium fuel and other assemblies of plutonium-uranium fuel, by some combination of scatter and zone loading of these different assemblies throughout the reactor core. In any of these approaches the large differences in the thermal neutron cross sections of fissile uranium and plutonium may result in difficult problems of controlling the spatial distributions of power density and of minimizing the power peaking

It is possible that the early recycle of self-generated plutonium in water reactors may later shift to the use of plutonium in dedicated plants, when the amount of plutonium to be utilized becomes large enough to justify the dedication of entire reactors for this purpose. Since the fuel cycle for the dedicated plant most clearly illustrates the new environmental issues associated with plutonium utilization in water reactors, it is the concept considered in this report.

The equilibrium fuel cycle for a 1000-Mw water reactor dedicated for plutonium utilization is shown in Figure 1. Fresh fuel is fabricated from a mixture of natural uranium, make-up plutonium recovered from the fuel discharged yearly from two (approximately) 1000-Mw uranium-fueled water reactors, and plutonium recovered from the fuel discharged from this reactor. The material quantities are calculated for a pressurized-water reactor

FLOW QUANTITIES ARE STATED IN METRIC TONS/YEAR
UNLESS OTHERWISE INDICATED

80% CAPACITY FACTOR

EVAPORATIVE COOLING TOWER FOR WASTE HEAT REJECTION

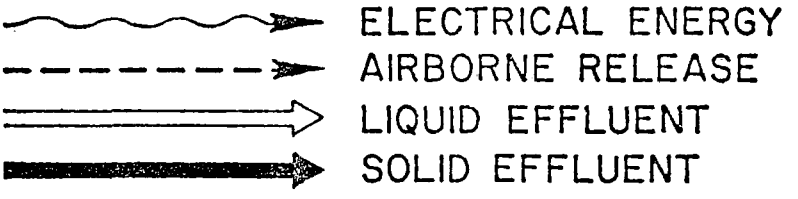

Mg	=	METRIC TONS
Ci	=	CURIES
kwh	=	KILOWATT-HOURS
Mw	=	MEGAWATTS ELECTRICAL
MPC	=	MAXIMUM PERMISSABLE CONCENTRATION

Figure I.

Light Water Reactor With Uranium And Recycled Plutonium 1000 Mwe

Material And Environmental Release Flowsheet

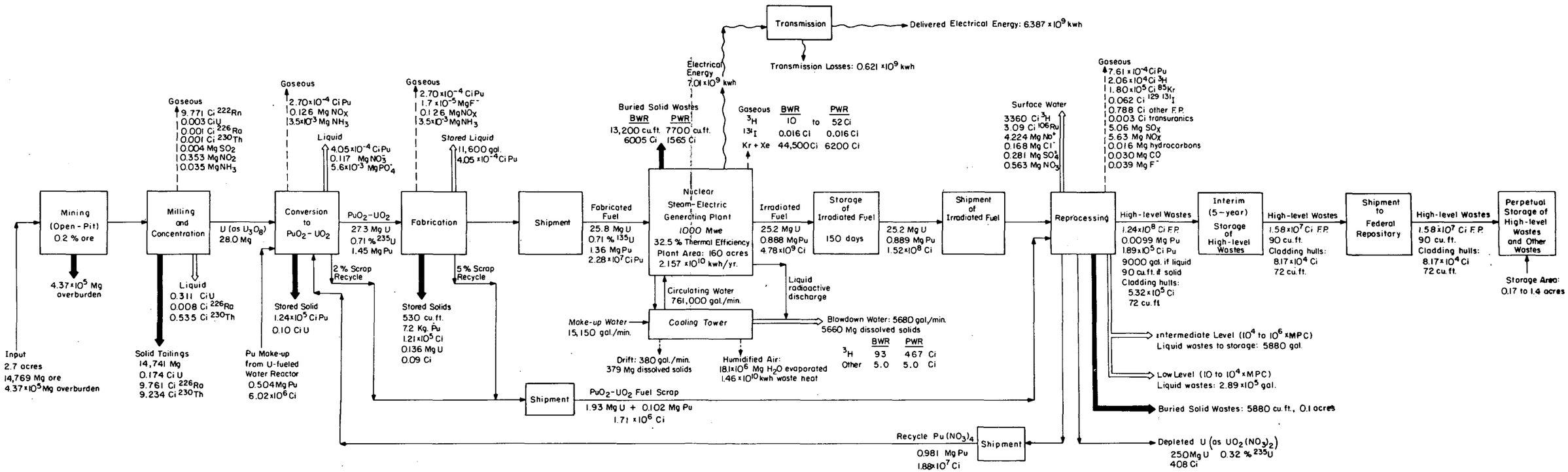

operating at an average specific power of 30 Mw(t) per metric ton of actinides* initially in the fresh fuel and an average irradiation exposure of discharge fuel of 33,000 Mw(t) days per metric ton of initial actinides. The material quantities shown are the yearly amounts of the equilibrium fuel cycle for a 1000 Mw** plant operating at 80% load factor. The radionuclide compositions and amounts were calculated from the ORIGEN code for a neutron spectrum characteristic of a dedicated reactor with mixed-oxide** fuel. The principal nuclear reactions leading to the radionuclides of neptunium, plutonium, americium, and curium are shown in Figure 2[3]. The flowsheet for the fuel actinides in the equilibrium fuel cycle is shown in Figure 3.

---

* A metric ton consists of 10^6 grams and is denoted on the flowsheet by "Mg". Actinides in the fresh fuel are uranium and plutonium. In this report Mw refers to electrical output, and Mw(t) refers to thermal output.

** "Mixed-oxide" fuel refers to fuel prepared from a mixture of uranium oxide and plutonium oxide.

Figure 2

Actinide Chains in
ranium-Plutonium Fuel

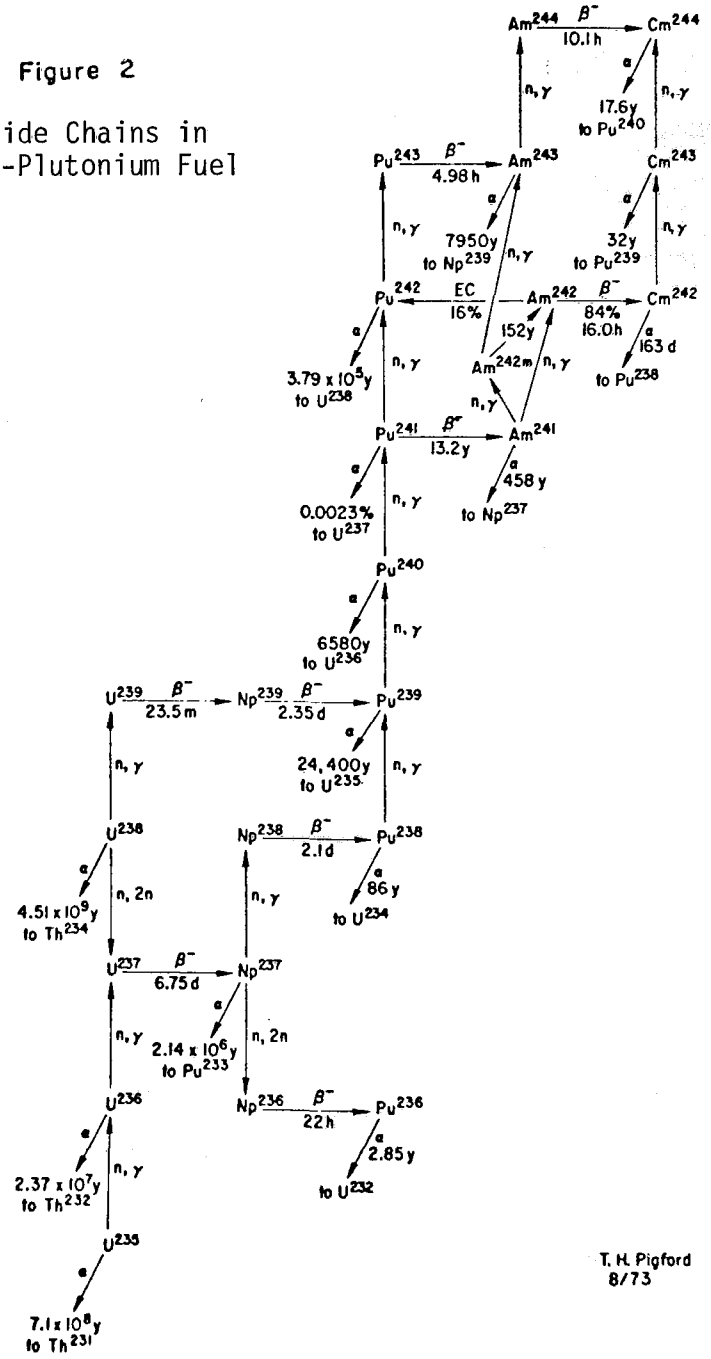

T. H. Pigford
8/73

FLOW QUANTITIES ARE STATED IN METRIC TONS/YEAR UNLESS OTHERWISE INDICATED

80% CAPACITY FACTOR

EVAPORATIVE COOLING TOWER FOR WASTE HEAT REJECTION

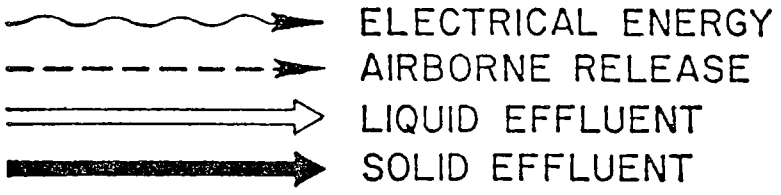

Mg	=	METRIC TONS
Ci	=	CURIES
kwh	=	KILOWATT-HOURS
Mw	=	MEGAWATTS ELECTRICAL
MPC	=	MAXIMUM PERMISSABLE CONCENTRATION

Figure 3 Fuel Actinide Flowsheet for 1000-Mw U-Pu Fueled Water Reactor
Yearly Quantities, 80% Load Factor
Ci = curies

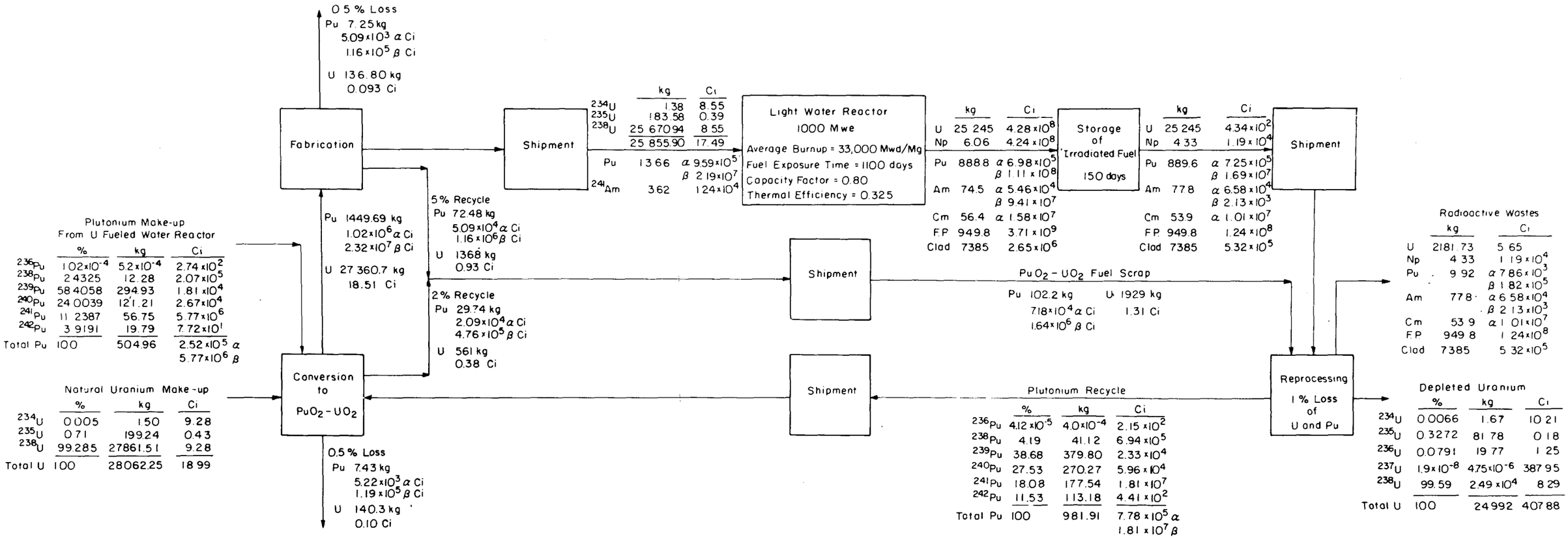

The problems of control-absorber worth may limit the extent to which a water reactor designed originally for slightly enriched uranium can accommodate the recycle of plutonium, and this may vary significantly with the type of reactor to which the plutonium is to be recycled. Use of soluble boron in the reactor coolant in pressurized water reactors requires less total reactivity in movable and fixed control absorbers in these reactors, and it should be possible to increase the concentration of dissolved boron with plutonium fueling and still maintain a negative coolant temperature coefficient of reactivity. For pressurized water reactors using the rod-cluster-control (RCC) configuration, whereby in some fuel assemblies some of the fuel rods are replaced by ganged control rods, the increased control necessary for plutonium recycle may be obtained by adding more of these RCC assemblies to the reactor core.

However, in the boiling-water reactors the control absorbers are the cruciform elements located at the intersection of four adjacent fuel assemblies, and it may be more difficult to increase the control rod worth in this arrangement. It is estimated that a boiling-water reactor may be limited to recycle fueling of no more than 110% to 130% of the self-generated plutonium without substantial modification in the control absorber system[2]. Without such modification, the boiling water reactor may be limited in the extent to which it can be applied as a reactor dedicated for complete fueling with recycle plutonium.

An important benefit from plutonium utilization is the reduction in the amount of uranium ore consumed and the reduction in the amount of uranium isotopic enrichment. There are many alternative ways in which these benefits can be realized. Plutonium can be mixed with uranium of some intermediate enrichment between that of natural uranium and the enrichment used for uranium fueling, plutonium can be mixed with depleted uranium presently stockpiled from isotope separation, or plutonium can be mixed with natural uranium. It is the latter concept which is assumed for the present flowsheet. For the assumed irradiation exposure of 33,000 Mw(t) days per metric ton, the calculated yearly requirement of natural uranium for fuel fabrication on this flowsheet is 26.1 Mg. Even though the uranium in the discharged fuel contains 0.33% ^{235}U, which is greater than the ^{235}U content in depleted uranium from isotope separation, recycle of this recovered uranium for isotopic enrichment is probably not economically justified because of the costs of conversion to UF_6 for isotopic separation and subsequent conversion of the product UF_6 to UO_2. A feature of the fuel cycle shown here is that the hexafluoride conversion steps are avoided.

An important consequence of plutonium utilization is that the amount of plutonium in the fuel cycle continues to build up with each subsequent recycle of the recovered plutonium until the equilibrium fuel cycle is reached, usually after a period of about 8 years. At equilibrium the amount of plutonium recovered yearly from reprocessing the discharge fuel and scrap

recycle in this cycle is 0.982 Mg/yr, as compared with 0.207 Mg/yr* recovered from the discharge fuel from the uranium-fueled water reactor[1]. This recycled plutonium is added to 0.505 Mg/yr of make-up plutonium, so that the yearly input to mixed-oxide fuel conversion and fabrication is 1.486 Mg of plutonium, with radioactivity of 9.59×10^5 alpha curies and 2.19×10^7 beta curies. Extremely careful process control is required to maintain plutonium effluents at the very low levels required to meet the plutonium radiological standards.

At equilibrium the fuel charged to the reactor contains 5% plutonium in the plutonium-uranium mixture. The calculated isotopic composition of the make-up plutonium from the uranium-fueled water reactors, the recycled plutonium, and the mixed plutonium in the fabricated fuel charge are shown in Table 1. The calculated yearly quantities of radioactivity of these radionuclides in the discharge fuel are shown in Table 2. The greatest amount of plutonium alpha radioactivity results from ^{238}Pu, with lesser amounts from ^{240}Pu and ^{239}Pu. The beta activity from ^{241}Pu, after 150 days of preprocessing cooling is 23 times greater than the total plutonium alpha activity.

Because of the high concentration of the higher-mass plutonium isotopes in the equilibrium cycle and because these isotopes are present during the entire irradiation period of fuel in the reactor, relatively large quantities

---

* Corrected to 80% load factor.

TABLE 1

Isotopic Composition of Plutonium in Equilibrium Fuel Cycle for 1000 Mw Uranium-Plutonium Fueled Water Reactor

	Make-up plutonium recovered from discharge fuel from U-fueled water reactor %	Plutonium recovered from discharge fuel from this reactor and recycled %	Plutonium fabricated into fresh fuel for this reactor %
^{236}Pu	1×10^{-4}	3.9×10^{-5}	6.1×10^{-5}
^{238}Pu	2.43	4.25	3.65
^{239}Pu	58.40	37.95	45.04
^{240}Pu	24.00	27.65	26.44
^{241}Pu	11.24	18.35	15.74
^{242}Pu	3.92	11.80	9.14
	100	100	100

Table 2

Radioactivity in Reactor and Fuel Cycle for a 1000 Mw Water Reactor Fueled with Natural Uranium and Recycled Plutonium

Radionuclides		Half-Life	Reactor Inventory[a]	In Discharge Fuel 10^6 curies/yr.		
			10^6 Curies	At Discharge	150-day Decay	10-yr. Decay
Fission Products						
Tritium[b]	^3H	12.26 yr.	0.076	0.025	0.024	0.014
Krypton	83m	1.86 hr.	2.62	0.87	0	0
	85m	4.4 hr.	11.54	3.83	0	0
	85	10.76 yr.	0.56	0.19	0.18	0.10
	87	76 m.	21.38	7.09	0	0
	88	2.8 hr.	32.02	10.60	0	0
	89	3.18 m.	38.50	12.78	0	0
	90	33 sec.	44.76	14.80	0	0
TOTAL[c]			221.42	73.49	0.18	0.10
Strontium	89	52.7 d.	40.98	13.61	1.84	0
	90	27.7 yr.	3.74	1.24	1.23	0.97
TOTAL[c]			395.68	131.33	3.07	0.97
Iodine	129	1.7×10^7 yr.	3.90×10^{-6}	1.29×10^{-6}	1.30×10^{-6}	1.30×10^{-6}
	131	8.05 d.	73.50	24.40	6.18×10^{-5}	0
	132	2.26 hr.	102.96	34.17	4.35×10^{-13}	0
	133	20.3 hr.	129.12	42.86	0	0
	134	52.2 m.	143.98	47.78	0	0
	135	6.68 hr.	112.72	37.41	0	0
	136	83 sec.	40.84	13.55	0	0
TOTAL[c]			938.58	311.51	6.32×10^{-5}	1.30×10^{-6}
Xenon	131m	11.8 d.	0.52	0.17	8.98×10^{-5}	0
	133m	2.26 d.	3.12	1.03	0	0
	133	5.27 d.	129.20	42.88	1.42×10^{-7}	0
	135m	15.6 m.	34.08	11.31	0	0
TOTAL[c]			671.60	222.90	9.00×10^{-5}	0
Cesium	134	2.046 yr.	17.44	5.78	5.04	0.19
	137	30.0 yr.	9.08	3.01	2.98	2.39
TOTAL[c]			548.20	181.95	8.03	2.59
Zr, Nb, Mo, Tc, Ru, Rh, Pd, Ag, Cd, In, Sn, Sb			4486.14	1488.92	63.39	0.08
Rare Earths: La,Ce,Pr, Nd,Pm,Sm,Eu,Gd,Tb,Dy, Ho			1626.72	539.90	40.86	0.44
TOTAL FISSION PRODUCTS			11,166.18 (2.86 Mg)	3706.00 (0.94 Mg/yr.)	123.56	7.44

(Table 2 continued)

Radionuclides		Half-Life	Reactor Inventory	In Discharge Fuel 10^6 curies/yr.		
			10^6 Curies	At Discharge	150-day Decay	10-yr. Decay
Actinides						
Uranium	234	2.47×10^6 yr.	2.90×10^{-5} (4.69 Kg)	9.67×10^{-6}	1.04×10^{-5}	2.8×10^{-5}
	235	7.1×10^8 yr.	8.59×10^{-7} (401.03 Kg)	1.77×10^{-7}	1.77×10^{-7}	1.7×10^{-7}
	236	2.4×10^7 yr.	1.92×10^{-6} (30.05 Kg)	1.26×10^{-6}	1.26×10^{-6}	1.2×10^{-6}
	237	6.75 days	20.62 (0.24 kg)	6.84	4.06×10^{-4}	2.5×10^{-4}
	238	4.5×10^9 yr.	2.55×10^{-5} (76.54 Mg)	8.37×10^{-6}	8.37×10^{-6}	8.3×10^{-6}
	239	23.5 min.	1268.40 (0.02 Kg)	420.9	0	0
TOTAL			1289.37 (77.11 Mg)	428.0 (25.24 Mg)	4.33×10^{-4}	2.9×10^{-4}
Neptunium	236	5.0×10^3 yr.	4.15×10^{-5}	2.75×10^{-5}	0	0
	237	2.1×10^6 yr.	4.50×10^{-6}	2.98×10^{-6}	3.05×10^{-6}	0
	238	2.12 days	7.42	2.46	0	0
	239	2.35 days	1266.74	420.4	0.01	0.01
TOTAL			1275.38 (4.50×10^{-6} α) (1275.38 β)	423.7 (2.98×10^{-6} α) (423.7 β)	0.01	0.01
Plutonium	236	2.85 yr.	9.60×10^{-4} (1.80 gm.)	1.94×10^{-4}	1.76×10^{-4}	1.7×10^{-5}
	238	87.4 yr.	2.20 (130.81 Kg)	0.62	0.65	0.63
	239	24390 yr.	0.08 (1.42 Mg)	0.02	0.02	0.02
	240	6600 yr.	0.20 (915.28 Kg)	0.05	0.05	0.05
	241	14.3 yr.	58.90 (579.55 Kg)	17.2	16.8	10.6
	242	3.87×10^5 yr.	1.36×10^{-3} (351.06 Kg)	4.19×10^{-4}	4.19×10^{-4}	4.19×10^{-4}
	243	4.96 hr.	283.12 (0.10 Kg)	94	7.95×10^{-10}	7.95×10^{-10}
TOTAL			2.48 α 342.02 β (3.39 Mg)	0.69 α 111 β (0.88 Mg)	0.72 α 16.8 β (0.89 Mg)	0.71 α 10.6 β (0.84 Mg)

(Table 2 continued)

Radionuclides	Half-Life	Reactor Inventory	In Discharge Fuel 10^6 curies/yr.		
		10^6 Curies	At Discharge	150-day Decay	10-yr. Decay
Actinides					
Americium 241	433 yr.	0.08	0.04	0.05	0.01
242m	152 yr.	3.20×10^{-3}	2.12×10^{-3}	2.12×10^{-3}	2.0×10^{-3}
242	16.0 hr.	49.16	16.32	2.12×10^{-3}	2.0×10^{-3}
243	7370 yr.	1.79×10^{-2}	1.18×10^{-2}	1.18×10^{-2}	1.1×10^{-2}
244	10.1 hr.	234.48	77.82	0	0
TOTAL		283.72 (0.13 α) (283.64 β)	94.21 (0.05 α) (94.1 β)	0.07	0.27
Curium (242-248) and Berkelium (249,250)		47.60 (α)	15.79 (α)	10.11	2.59
TOTAL ACTINIDES (Th, Pa, U, Np, Pu, Am, Cm, Bk)		3240.32 (80.82 Mg)	1057.77 (26.27 Mg)	27.78	14.28
Cladding					
ACTIVATED CLADDING AND STRUCTURAL MATERIAL		7.96 (22.25 Mg)	2.64 (7.38 Mg)	0.53	0.03
Total Fuel and Cladding					
FISSION PRODUCTS ACTINIDES AND CLADDING		14,414.46 (105.93 Mg)	4766.41 (34.59 Mg)	151.87	21.75

(a) Inventories of fission products and activated cladding in the reactor are calculated on the basis that all fuel has the composition of discharge fuel. For non-saturable species, whose half lives are large compared with the fuel life of 3 years, the inventory within the reactor will be about one-half to two thirds of the value listed, depending upon the fuel-management scheme. For long-lived actinides at linear change from charge to discharge is assumed to calculate the reactor in calculating the reactor inventory.

(b) Quantities listed are fission-product tritium only and do not include tritium formed by neutron-activation reactions in boron controls and contaminants.

(c) Totals include all iostopes of the element, including short-lived species not listed in the Table.

(d) Calculated for the equilibrium fuel cycle, average thermal exposure of discharge fuel: 33,000 Mw days per Mg of actinides charged, average thermal specific power: 30 Mw per Mg of actinides charged.

of americium and curium are produced in this fuel cycle*. The quantities of plutonium, americium, and curium in fuel reprocessing for this uranium-plutonium fueled reactor are compared with equivalent quantities for the uranium fueled reactor in Table 3. For the U-Pu fueled reactor the curium alpha activity is 13.9 times greater than the plutonium alpha activity. Not only is curium an important potential source of alpha effluents in fuel reprocessing, but both curium and americium are the important actinides in determining the ultimate long-term radioactivity in high-level wastes from fuel reprocessing, as discussed in Section 7. The amounts of americium and curium going into these high-level wastes is 30 times greater for the U-Pu fueled reactor than for the U fueled reactor.

In summary, the resource and economic benefits of plutonium utilization in water reactors are realized at the cost of increased amounts of plutonium processed in the fuel cycle, increased inventory of plutonium in the reactor and fuel cycle, and increased inventory of long-lived actinide emitters in the high-level wastes. Estimates of the principal environmental effluents of this fuel cycle are given in the following sections.

3. Mining, Milling, and Concentration

Environmental effluents from mining uranium ore are calculated from the data presented in "Fuel Cycles for Electric Power Generation"[1], scaled according to uranium throughput. Solid and liquid effluents from milling and concentration are also based upon that data, but the

---

* Relatively small quantities of berkelium and californium are also produced.

Table 3

Comparison of Neptunium, Plutonium, Americium and Curium Reprocessed Yearly from Uranium Fueling and Uranium-Plutonium Fueling in 1000 Mw Water Reactors, 150-day Cooling

	Half Life	Water Reactor Fueled with Slightly Enriched Uranium		Water Reactor Fueled with Natural Uranium and Recycled Plutonium	
		Kg/yr	Ci/yr	Kg/yr	Ci/yr
Neptunium					
237	2.14×10^6 yr	20.8	14.6	4.33	3.05
239	2.35 day	—	474	—	1.19×10^4
Total		20.8	α 14.6	4.33	α 3.05
			β 474		β 1.19×10^4
Plutonium					
236	2.85 yr	2.4×10^{-4}	1.34×10^2	3.31×10^{-4}	1.76×10^2
238	87.4 yr	5.98	1.01×10^5	38.5	6.50×10^5
239	24,390 yr	143.7	8.82×10^3	331	2.03×10^4
240	6,600 yr	59.0	1.30×10^4	247	5.44×10^4
241	14.3 yr	27.6	2.81×10^6	166	1.69×10^7
242	3.87×10^5 yr	9.64	3.76×10^1	108	4.20×10^2
Total		246	α 1.23×10^5	890	α 7.25×10^5
			β 2.81×10^6		β 1.69×10^7
Americium					
241	433 yr	1.32	4.53×10^3	15.73	5.39×10^4
242m	152 yr	0.011	1.16×10^2	0.218	2.12×10^3
242	16.0 hr	—	1.16×10^2	2.62×10^{-6}	2.12×10^3
243	7370 yr	2.48	4.77×10^2	61.8	1.19×10^4
Total		3.81	α 5.01×10^3	77.8	α 6.58×10^4
			β 1.16×10^2		β 2.12×10^3
Curium					
242	163 day	0.133	4.40×10^5	1.92	6.36×10^6
243	32 yr	0.002	9.03×10^1	0.0224	1.03×10^3
244	17.6 yr	0.911	7.38×10^4	46.2	3.74×10^6
245	9300 yr	0.055	9.79×10^4	5.22	9.21×10^2
Total		1.101	5.15×10^5	53.9	1.01×10^7

gaseous effluents are derived in part from the data for a plant operating at a capacity of 2000 tons/day (1814 Mg/day)[5], with the following estimated gaseous releases:

Table 4

Gaseous Effluents from Milling and Concentration of 2000 ton/day of Uranium

Uranium	439 Ci/day
^{226}Ra	185 Ci/day
^{230}Th	185 Ci/day
SO_2	460 lb/yr
NO_2	3.5×10^4 lb/yr
NH_3	3.5×10^3 lb/yr

The effluents on the present flowsheet are then scaled from the data in Table 4 according to uranium throughput. A 5% loss in uranium milling and concentration is assumed[6].

4. Fuel Conversion and Fabrication

The finished product from the conversion-fabrication operation consists of Zircaloy-clad fuel rods containing pellets of sintered $(Pu,U)O_2$. The mixed-oxide powder for pelletizing and sintering is prepared either by mechanical mixing of PuO_2 and UO_2 powders or by co-precipitation of uranium-plutonium oxalate from an aqueous nitrate solution. Calcination of the mixed oxalate results in a solid solution of PuO_2 and UO_2, which has the advantage of a homogenous mixture and less chance of segregation of PuO_2. Also, the solid-solution mixed oxide is easier to dissolve in later reprocessing operations. The rate of dissolution of irradiated fuel prepared initially by mechanically mixing PuO_2 and UO_2 powders has been found to be very low.

The alternate process of mechanically mixing the two oxide powders is the most straightforward if the plutonium has previously been converted to the oxide prior to shipping from the fuel reprocessing plant. Although $Pu(NO_3)_4$ solution is now shipped from reprocessing to fabrication in 3-liter polyethylene bottles, it is contemplated[2] that regulations may soon require that plutonium be shipped only as a dry stable solid, such as PuO_2, so that the conversion of $Pu(NO_3)_4$ to the oxide would be done at the fuel reprocessing plant.

In either event, fabrication requires the handling of PuO_2 as a powder, either as pure oxide or diluted with about twenty times* as much UO_2. Controlling

---

* For the equilibrium fuel cycle.

and confining the solid particles containing plutonium and minimizing the escape of even a very small fraction of these solid particles as airborne aerosols is the principal environmental-control problem in fuel fabrication. It has been shown[3] that in a typical fabrication plant capable of processing one metric ton per day of uranium-plutonium fuel, the fraction of the plutonium processed which is calculated to escape as an aerosol, resulting in off-site concentrations well below the plutonium radiological standards, is of the order of one part in 10^{13}. To protect the process-plant workers, the plutonium conversion and fabrication operations are carried out in glove-box process lines which are carefully ventilated with air that passes through multiple particulate filters before exhaust. The performance of such a filtration system appears to be adequate for plutonium control, although there continues to be uncertainty with regard to the means of predicting the performance of multiple filtration systems from data on single filters.

The amount of radioactivity associated with recycle plutonium during fuel fabrication depends in part upon the time elapsed since the plutonium was separated as a purified product in fuel reprocessing. Between the times of reprocessing and fabrication, decay of 14.3-yr. ^{241}Pu results in the build-up of 433-yr. ^{241}Am, resulting in more energetic and penetrating gammas than from ^{241}Pu alone. Also, the decay of 2.85-yr. ^{236}Pu results in 72-yr. ^{232}U, which alpha decays to 1.91-yr. ^{228}Th, an intermediate radionuclide in the

decay of natural ^{232}Th. The several daughters of ^{228}Th are all short-lived and include ^{212}Bi and ^{208}Tl, both of which emit gammas with energies of a few mev. These daughters from the decay of $^{236,241}Pu$ will contribute to the shielding requirements for shipping from reprocessing, fuel fabrication, shipping the fabricated fuel to the reactor site, and handling the fabricated fuel at the reactor site. Plutonium which has been stored for several years prior to fabrication will be a special problem in this regard. However, the principal public-health hazard from effluents will probably be from inhalation of the small quantities of plutonium that are released and should not be significantly affected by these plutonium decay daughters.

The effluents for the present flowsheet are based upon data for a fabrication plant capable of fabricating 300 Mg/yr of uranium and plutonium into mixed-oxide fuel. The conversion and fabrication emissions from such a plant are given in Table 5[2]. The emissions for the present flowsheet are scaled from these data according to the uranium-plutonium throughput.

The liquid filtrate from co-precipitation conversion contains 0.5% of the uranium and plutonium processed. This is solidified, packaged, and shipped to land storage for solidified low-level radioactive wastes. Similarly, 0.5% of the uranium and plutonium processed in fabrication appears as a low-level solid waste. Process scrap amounting to 2% of the actinides processed in conversion and 5% of those processed in fabrication is shipped to fuel reprocessing for actinide separation and recovery.

TABLE 5

Environmental Emissions for a Mixed-Oxide Fuel Fabrication Plant (300 Mg/yr of Uranium and Plutonium)[2]

Chemical Conversion to Oxide

Gaseous Effluents

NO_x	1350 kg/yr
NH_3	37.5 kg/yr
Plutonium + americium	alpha 1.37×10^{-4} Ci/yr beta 2.75×10^{-3} Ci/yr

Liquid Effluents

PO_4^{3-}	60 kg/yr
NO_3^-	1250 kg/yr
Plutonium + americium	alpha 2.06×10^{-4} Ci/yr beta 4.12×10^{-3} Ci/yr

Solid Wastes

750 drums/yr @ 7.35 cu.ft/drum, containing 0.5% of the uranium and plutonium processed.

Fabrication

Gaseous Effluents

F^-	0.187 kg/yr
NO_x	1350 kg/yr
NH_3	37.5 kg/yr
Plutonium	alpha 1.37×10^{-4} Ci/yr beta 2.75×10^{-3} Ci/yr

Liquid Effluents

Plutonium	alpha 2.06×10^{-4} Ci/yr beta 4.12×10^{-3} Ci/yr

Solid Wastes

750 drums/yr @ 7.35 cu.ft/drum, containing 0.5% of the uranium and plutonium processed.

5. Nuclear Power Plant Operation

The non-radiological emissions from power plant operations would be similar to those analyzed in Fuel Cycles - Part I. The radiological emissions should also be substantially the same, except for ^{85}Kr, which has a yield from ^{239}Pu fission which is less than half that from ^{235}U fission. The ^{85}Kr emissions from the power plant are reduced in proportion to the calculated reactor inventory of these radionuclides.

No environmental release of plutonium in the reactor fuel at the power plant has been identified[2]. However, some environmental analyses indicate small releases of rare-earth fission products to the reactor coolant. Consequently, because of the generally similar chemical properties, some release of plutonium to the coolant would be expected. More detailed study of this as a possible pathway for plutonium in liquid effluents and solid wastes is warranted.

6. Shipping

No environmental effluents from shipping discharge fuel have been identified for normal shipping operations. The rate of heat generation and radioactivity level are actually lower in plutonium-recycle water-reactor fuel than in fuel shipped from a uranium-fueled water reactor*. Apart from consideration of accidents, which is beyond the scope of the present study, shipping fuel from uranium-plutonium fueled reactors should present no greater environmental impact

* The rate of decay heat generation during the short period following a loss-of-coolant accident is greater for plutonium-recycle fuel than for uranium fuel, but during post-irradiation cooling plutonium-recycle fuel decays to a lower level.

7. Fuel Reprocessing

Reprocessing the fuel from the uranium-plutonium fueled reactors follows a similar process as reprocessing irradiated uranium fuel. The fuel rods are chopped into segments, exposing the mixed-oxide pellets which are then dissolved in nitric acid. Purex solvent extraction[4] produces separate streams of uranyl nitrate and plutonium nitrate and a third stream consisting of the fission products and the remaining actinides. The plutonium is then stored as nitrate solution, or it may be converted to the oxide for storage and ultimate shipping. As has been mentioned in Section 3, difficulties have been encountered in dissolving irradiated fuel which was initially prepared as a mixed uranium-plutonium oxide. This has been attributed to the relatively slow dissolution of the separate plutonium dioxide particles remaining from mechanical blending of the mixed-oxide powder.

Also, the high concentration (ca 5%) of plutonium in the fuel will introduce new problems of criticality control in dissolution and solvent extraction and may also contribute to greater solvent degradation. There are several alternative technical means of solving these problems, such as adding fluoride to the dissolver solution. It is assumed that these solutions will result in no significant changes in the environmental effluents from this reprocessing technology.

The releases of ^{3}H and ^{85}Kr are calculated on the basis of 100% of the fission-product tritium and krypton in the discharge fuel at the time of reprocessing.

The krypton release is less than that for a uranium-fueled water reactor because of the lower fission-yield of ^{85}Kr from plutonium. Of the total tritium released, 86% is released as tritiated water vapor in the gaseous effluents and 14% is released as tritiated water in surface-water discharges[1] It is assumed that the scrubbing process for recovering iodine evolved during dissolution is 99.9% efficient, i.e., the decontamination factor is 1000. The plutonium releases are estimated from data in reference (2) and scaled to the plutonium throughput. Other radionuclide releases are based upon the data for the uranium fuel cycle[1], scaled according to the throughput of plutonium and uranium. The uranium product is stored, since its ^{235}U isotopic content of 0.327% does not justify chemical conversion and recycle.

A low-level waste stream containing an estimated 0.5% of the actinides processed is concentrated to a solid and canned for land storage. The quantities of intermediate-level liquids and buried solid wastes are scaled from data in reference (1).

8. High-Level Waste Management

The high-level waste steam from fuel reprocessing contains the non-volatile fission products, neptunium, americium, and curium, and the small quantities of uranium and plutonium resulting from incomplete partitioning in solvent extraction. These wastes may be stored for up to five years at the reprocessing plant, thereafter they are to be solidified and shipped to a Federal repository, as described in "Fuel Cycles for Electric Power Generation"[1]. As has been discussed

in Section 1, the effect of plutonium recycle is to increase significantly the actinide content of the high-level wastes (cf. Table 3). It is these actinides, particularly ^{243}Am, ^{242}Cm, ^{243}Cm, and ^{244}Cm, which control the ultimate level of radioactivity, and particularly alpha radioactivity, which remains in these wastes after storage periods of hundreds of years. This radioactivity ultimately appears as long-lived plutonium radionuclides, i.e., ^{238}Pu from ^{242}Cm decay, ^{239}Pu from the decay of ^{243}Am and ^{243}Cm and ^{240}Pu from the decay of ^{244}Cm. Although these plutonium isotopes are present in the high-level wastes when first separated in solvent extraction, the amount of plutonium due to this incomplete partitioning is much less than the amount of plutonium ultimately formed by americium and curium decay. The calculated activities of the isotopes of americium, curium, and plutonium produced in one year of operation at 1000 Mw, as a function of the storage time after separation, are shown in Figures 4, 5, and 6. The increase with time of the plutonium isotopes during the first few thousand years is due to the decay of the americium and curium precursors. After a few thousand years of storage the activity of plutonium exceeds that of americium and curium.

The total radioactivity in plutonium, americium, and curium in high-level waste is compared for uranium-plutonium fueling and uranium fueling in Figure 7. At a time of about 300 years, when the actinide activity exceeds the fission-product activity, the total alpha activity in these wastes is

Figure 4

AMERICIUM ACTIVITY IN HIGH-LEVEL WASTES

1000-Mw U-Pu FUELED WATER REACTOR

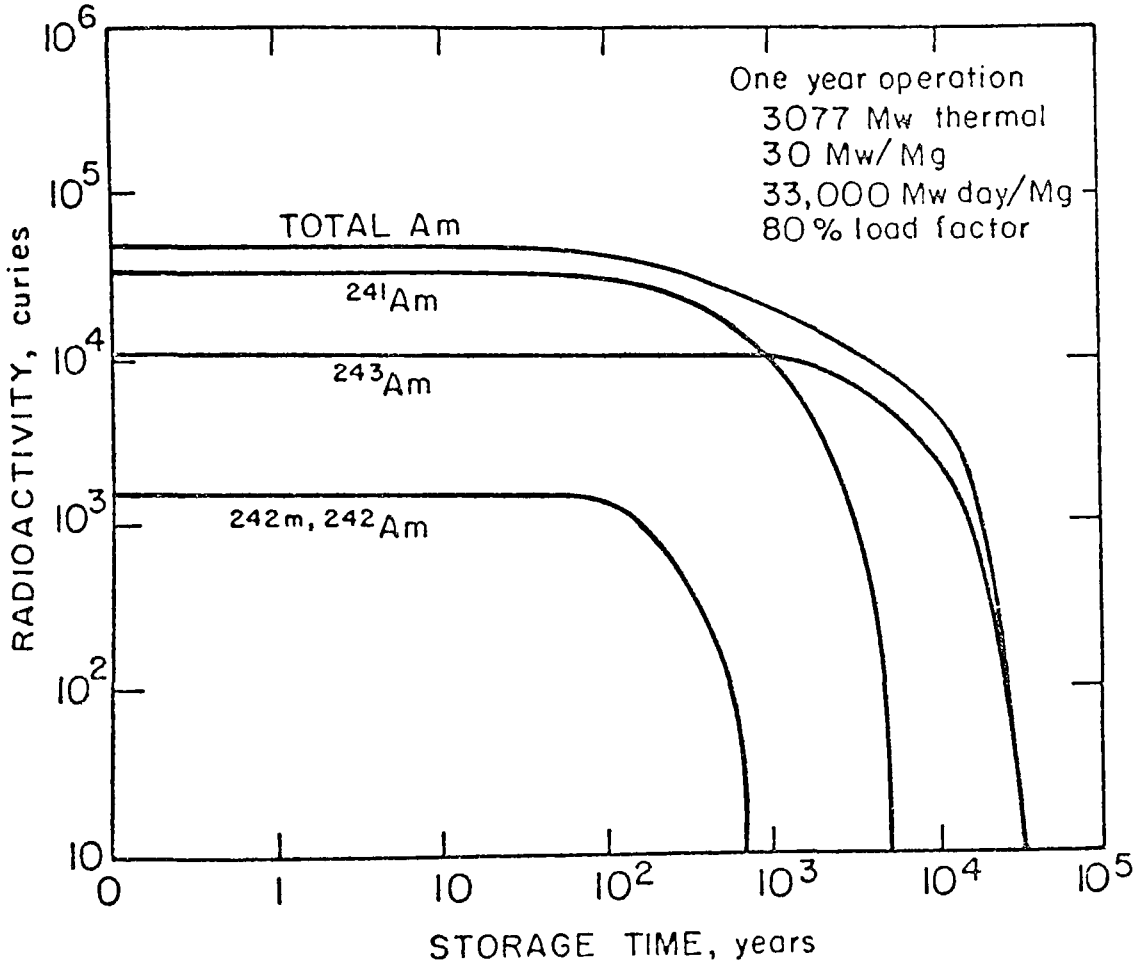

Figure 5

CURIUM ACTIVITY IN HIGH-LEVEL WASTES
1000-Mw U-Pu FUELED WATER REACTOR

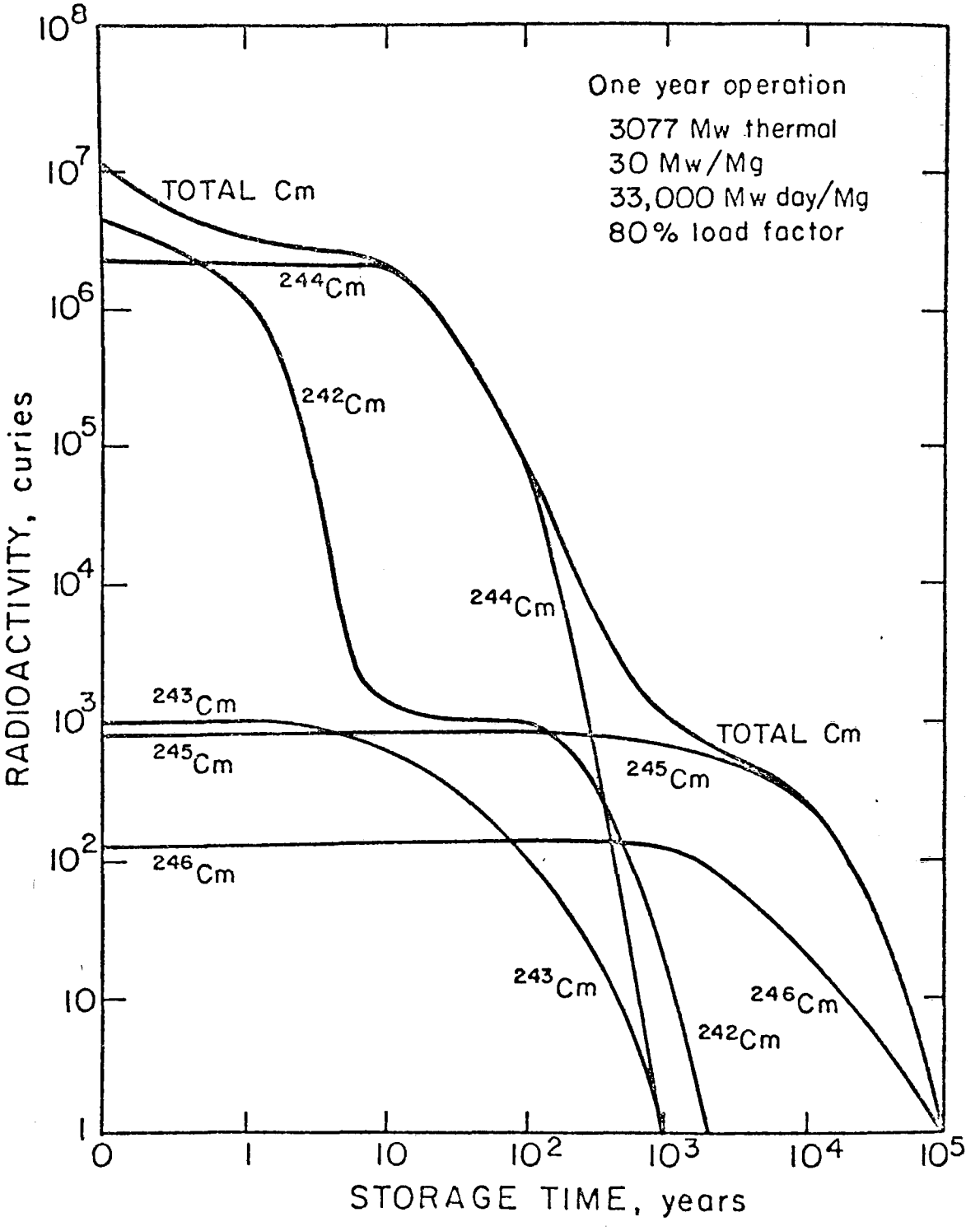

Figure 6

PLUTONIUM ACTIVITY IN HIGH-LEVEL WASTES
1000-Mw U-Pu FUELED WATER REACTOR

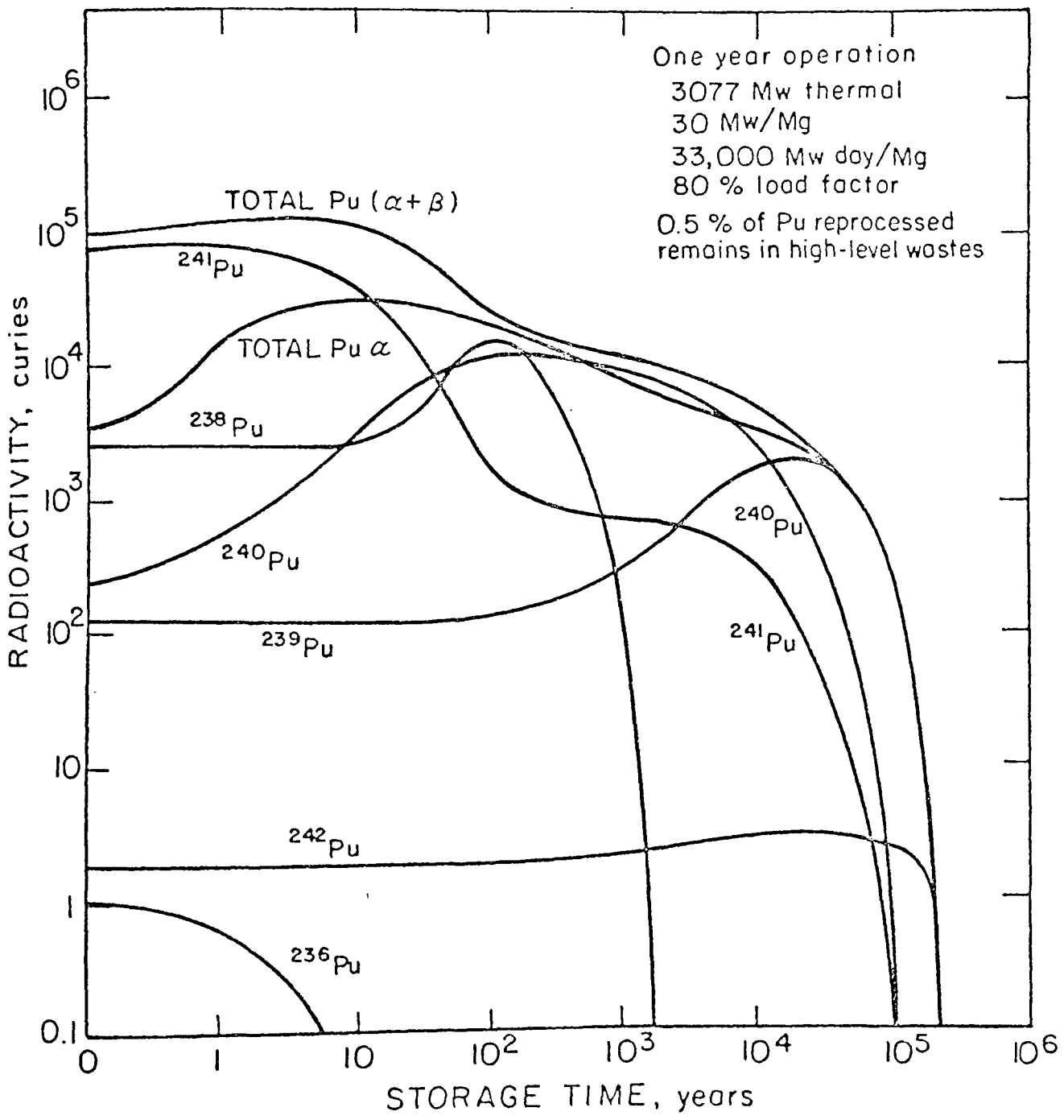

Figure 7

ACTINIDES IN HIGH-LEVEL WASTES FOR U FUELED AND U-Pu FUELED WATER REACTORS

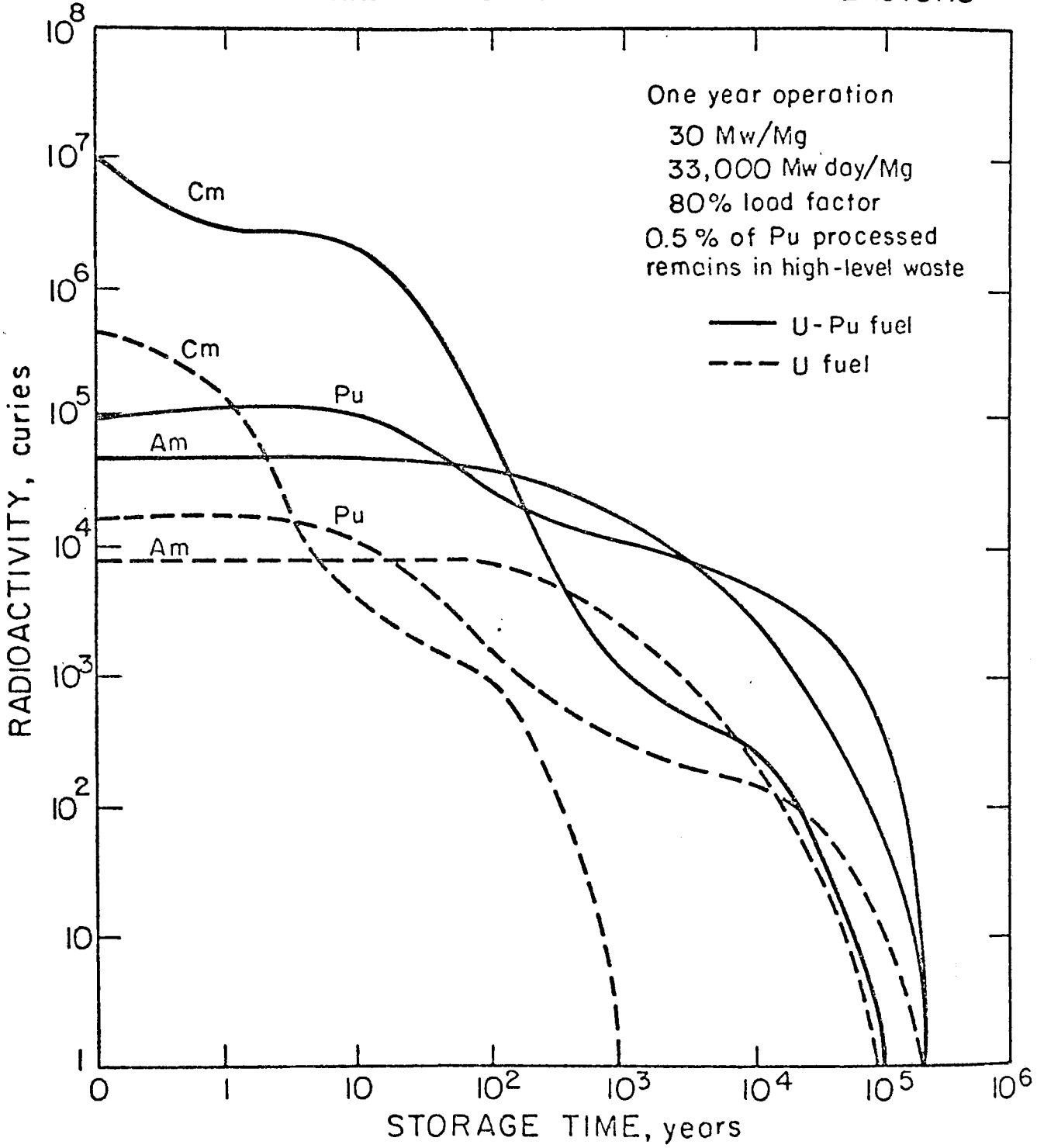

about nine times greater for uranium-plutonium fueling than for uranium fueling. After a storage time of a few thousand years, when the actinide activity is determined by the $^{239,240}Pu$ content, the radioactivity in high-level wastes is about 35 times greater for uranium-plutonium fueling.

9. Low-Level Actinide Solid Wastes

In Figure 3 a process loss of 0.5% of the plutonium into low-level solid wastes is indicated for each of the operations of reprocessing, conversion, and fabrication. The total yearly amount of plutonium in these low-level wastes is estimated to be 1.43×10^4 alpha curies and 3.31×10^5 beta curies. The contribution of $^{239,240}Pu$ to the alpha activity is 1.42×10^3 curies. This is a considerably greater amount of plutonium than that in the high-level wastes at the time of reprocessing. Although these low-level plutonium wastes do not contain the appreciable quantities of americium and curium which account for the increase in plutonium in high-level wastes during storage, the plutonium activity in these low-level wastes will remain within an order of magnitude of the plutonium activity in the high-level wastes, even after the americium and curium in the latter have decayed.

The long-term requirement of high-level waste management is to isolate the actinides, and mainly plutonium, from the environment. In this sense the low-level plutonium wastes are in the same realm of importance as are the high-level wastes and should be subject to the same or similar ultimate criteria for isolation. A principal physical difference between the two wastes at the time of their origin is the degree of dilution with inert

carrier material. However, with the degree of isolation that is probably necessary to make the long-term management of any form of plutonium wastes acceptable, it is not clear that the greater dilution of these low-level wastes in any way simplifies the technology necessary to isolate the plutonium from the environment. The greater dilution may, in fact, introduce technological difficulties in putting the contained plutonium into a form suitable for isolation that are not present with the high-level wastes. The problems of suitable long-term management of low-level solid wastes containing plutonium warrant careful attention.

REFERENCES

1. Pigford, T. H., M. J. Keaton, B. J. Mann, and P. M. Cukor and G. L. Sessler, "Fuel Cycles for Electric Power Generation", Teknekron, Inc. Report No. EEED 101, U.S. Environmental Protection Agency Contract No. 68-01-0561 (rev. March, 1975).

2. U. S. Atomic Energy Commission, Fuels and Materials Division of Licensing, "Generic Environmental Statement Mixed Oxide Fuel (Draft)," WASH-1327 (August, 1974).

3. Pigford, T. H., "Radioactivity in Plutonium, Americium, and Curium in Nuclear Reactor Fuel," Report to the Energy Policy Project, Ford Foundation (June, 1974).

4. Benedict, M., T. H. Pigford, "Nuclear Chemical Engineering," McGraw Hill (1957).

5. USAEC, D.O.L., Final Environmental Statement Related to Operation of the Highland Uranium Mill, Docket #40-8102 (November, 1973).

6. Oak Ridge National Laboratory, Projections of Radioactive Wastes to be Generated by the U.S. Nuclear Power Industry, ORNL-TM-3965 (February, 1974).

FUEL CYCLE FOR 1000-Mw HIGH-TEMPERATURE GAS-COOLED REACTOR

Thomas H. Pigford*
Robert T. Cantrell*
K. P. Ang*
and
Bruce J. Mann**

Teknekron Report No. EEED 105

March, 1975

* *Department of Nuclear Engineering, University of California, Berkeley, California.*

** *Now at U.S. Environmental Protection Agency, Office of Radiation Programs, Las Vegas, Nevada.*

ABSTRACT

This study presents an illustrative data base of material quantities and environmental effluents in the fuel cycle for a high-temperature gas-cooled reactor fueled with uranium and thorium. Data were calculated for a 1000 Mw nuclear power plant operating on an equilibrium fuel cycle. Results are shown in tables and on a fuel-cycle flowsheet.

TABLE OF CONTENTS

1. Introduction---------- 1

2. Reactor Characteristics---------- 2

3. Mining, Milling and Concentration---------- 19

4. Conversion of U_3O_8 to UF_6 and Uranium Enrichment---------- 23

5. Conversion and Fabrication of Initial Make-up Fuel---------- 23

6. Fabrication of Recycle Fuel---------- 23

7. Nuclear Power Plant Operation---------- 29

   7.1 Radionuclide Inventories---------- 29

   7.2 Tritium---------- 29

   7.3 Krypton and Xenon---------- 36

   7.4 Iodine---------- 37

   7.5 Additional Airborne Releases---------- 41

   7.6 Solid Wastes---------- 42

8. Shipment of Irradiated Fuel---------- 43

9. Fuel Reprocessing and Conversion---------- 43

10. High-Level Wastes---------- 47

References---------- 52

LIST OF FIGURES

1. Nuclide Chains from Thorium Irradiation---------- 3

2. Actinide Chains from Uranium Irradiation---------- 4

3. Uranium-Thorium Fueled Gas-Cooled Reactor 1000 Mw---------- 11

4. 1000 Mw HTGR Fuel Flow Sheet Yearly Quantities---------- 17

5. Radioactive Decay of Natural Thorium---------- 21

6. Fission Products in High-Level Wastes Produced in One Year by 1000 Mw HTGR---------- 48

7. Plutonium Radioactivity in High-Level Wastes Produced in One Year by 1000 Mw HTGR---------- 50

8. Actinide Radioactivity in High-Level Wastes Produced in One Year by 1000 Mw HTGR---------- 51

LIST OF TABLES

1. HTGR Fuel Particle Descriptions---------- 6

2. Calculated Uranium Composition of HTGR Fuel Particles--------- 8

3. Gaseous Effluents from Milling and Concentration of 2000 ton/day of Uranium---------- 19

4. Effluents and Solid Wastes from HTGR Fuel Refabrication------- 26

5. Radionuclides in 1000 Mw HTGR Reactor and in Discharge Fuel---------- 30

6. Actinides in 1000 Mw HTGR Reactor and in Discharge Fuel------- 32

7. Estimated Rate of Release of Tritium to Helium Coolant in 1000 Mw HTGR---------- 34

8. Estimated Yearly Environmental Releases of Tritium for a 1000 Mw HTGR---------- 35

9. Estimated Yearly Releases of Noble-Gas Radionuclides as Gaseous Effluents from 1000 Mw HTGR---------- 38

10. Calculated Inventories of Tellurium and Iodine Radionuclides in Helium Coolant for 1000 Mw HTGR---------- 39

11. Calculated Inventories of Iodine Radionuclides in Reactor Containment Building Air, 1000 Mw HTGR---------- 40

12. Calculated Annual Releases of Airborne Strontium from Reactor Containment Building Purge, 1000 Mw HTGR---------- 41

13. Gaseous Chemical Releases from HTGR Fuel Reprocessing Pilot Plant---------- 45

FUEL CYCLE FOR 1000 Mw HIGH-TEMPERATURE GAS-COOLED REACTOR

1. Introduction

This study presents estimates of the environmental effluents from a high-temperature gas-cooled power reactor (HTGR) fueled with uranium and thorium and from the associated fuel cycle operations. The study is based upon an adaptation of current reactor designs, of which the first unit has recently begun operation and several more are under construction and on order by U.S. electrical utilities.

A number of thermal-electrical power-generating technologies were examined in "Fuel Cycles for Electric Power Generation"[1]. The approach followed herein is similar. A flowsheet has been developed for a 1000 Mw nuclear generating plant and its associated fuel-cycle operations. Representative quantities for material throughput and environmental release are estimated for the operation of the nuclear plant for one year at 80% load factor*. Many quantities are the results of original calculations performed for this study. Others are derived from various references and are scaled to the current flowsheet. Variations from the quantities indicated herein may be expected for particular installations.

---

* Most of the non-radiological quantities are given in metric tons (Mg). Radiological quantities are given in curies (Ci).

The flowsheet shows waste-heat rejection at the nuclear power plant by evaporative cooling. Water requirements for the cooling system are scaled from data developed in "Fuel Cycles for Electric Power Generation".

2. Reactor Characteristics

The high temperature gas cooled reactor (HTGR) is a helium-cooled graphite structure fueled with a mixture of natural thorium (^{232}TH) and uranium of high fissile content. Part of the uranium in the reactor fuel consists of make-up highly enriched uranium (93.5% ^{235}U), obtained by enriching natural uranium in an isotope separation plant. The discharged fuel is processed to recover the uranium remaining from the initial make-up ^{235}U, which is then recycled for one more pass through the reactor. Also recovered from recycling is the uranium, largely fissile ^{233}U, formed by neutron-capture reactions in thorium. The thorium is too radioactive to be recycled. The fuel cycle considered in this study is the equilibrium fuel cycle, such that the composition of a given fuel charge consisting of thorium, make-up ^{235}U, and recycled uranium, is the same as previous and subsequent fuel charges. This equilibrium fuel cycle is reached only after several years of operation. The fuel life for the equilibrium fuel cycle is four years.

The principal actinides involved in using thorium-uranium fuel are shown in Figure 1. Neutron absorption in ^{237}Np results in ^{238}Pu; higher-mass plutonium isotopes result from neutron absorption in the small amount of ^{238}U (6.5%) present in the highly enriched make-up uranium, as shown in Figure 2.

Figure 1

Nuclide Chains from Thorium Irradiation

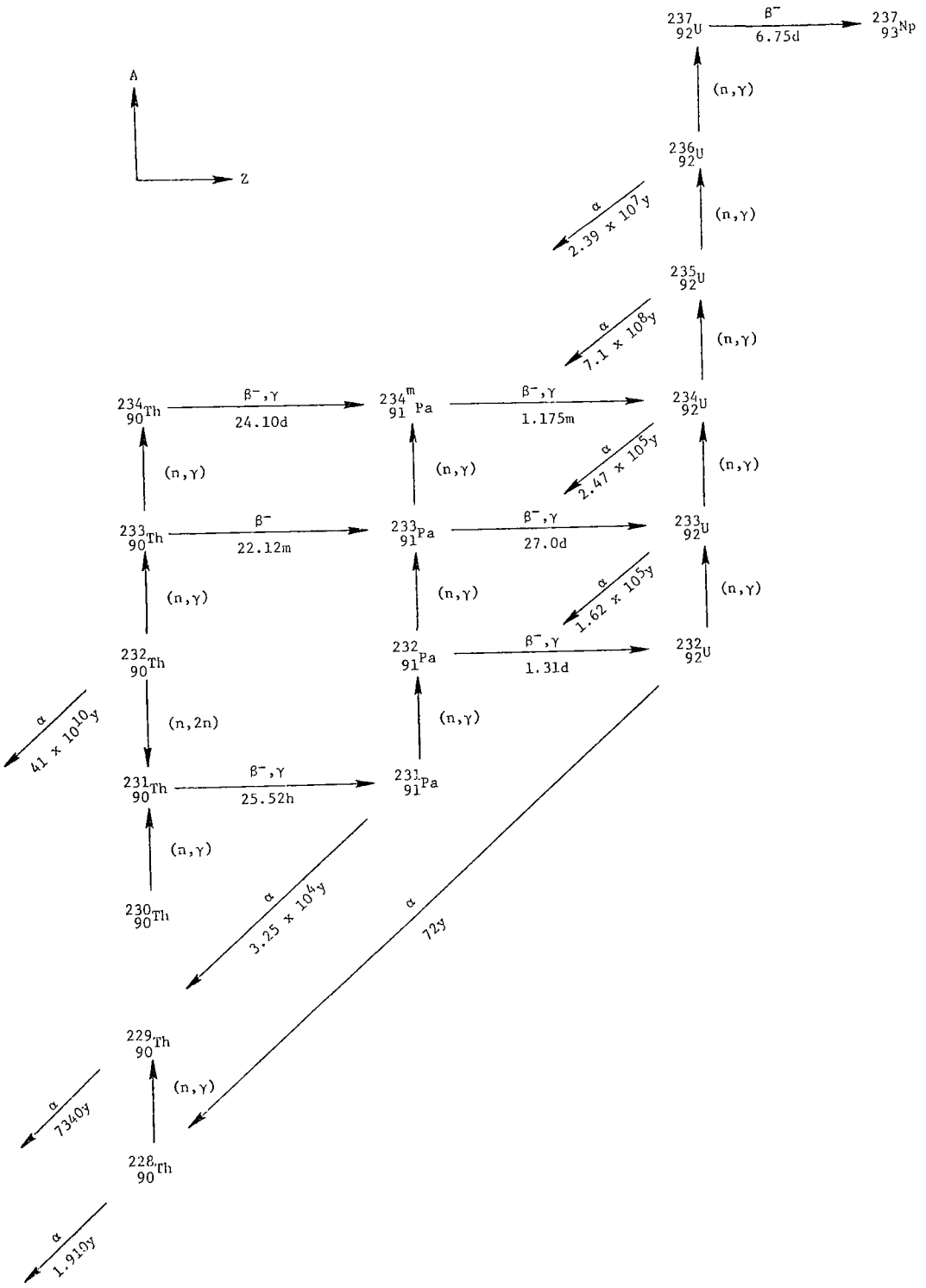

Figure 2

Nuclide Chains from Uranium Irradiation

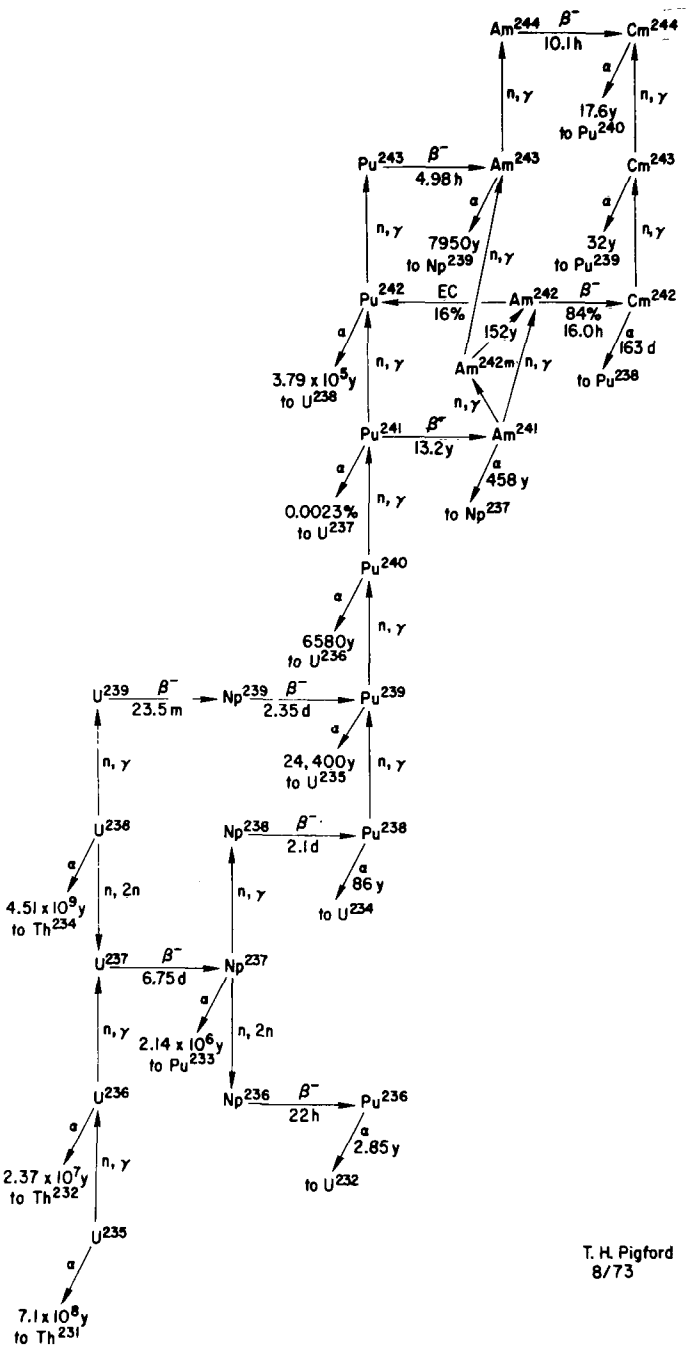

Each of the three types of uranium in the fresh fuel is formed into microspheres from 540 to 740 microns in size, which are then mixed with 820-micron microspheres of thorium and embedded in a carbonaceous matrix to form a fuel "stick"[2]. The resulting fuel sticks are sealed into holes in blocks of high-purity, nuclear-grade graphite, which acts as neutron moderator and structural support. Heat generated in the fuel sticks is conducted through the adjacent graphite into helium coolant, which flows through longitudinal holes penetrating each graphite fuel block.

Each fuel block contains only one of the three types of uranium-thorium fuel, so that the spatial arrangement throughout the reactor of blocks containing different types of fissile uranium provides a means of controlling the spatial distributions of neutron flux and power density.

The material properties of each of the three fuel types are given in Table 1. The initial make-up (IM) fuel elements, containing the highly enriched (93.5%) make-up uranium, are formed by 200-micron microspheres of UC_2 and 500-micron microspheres of ThO_2. The uranium microspheres in the IM fuel are each coated with an inner layer of low-density pyrolytic carbon to provide voids for fission products and to act as a buffer layer for fission-product recoil. Surrounding this is a layer of high-density pyrolytic carbon, a layer of silicon carbide, and then another layer of high-density pyrolytic carbon to reduce the diffusional escape of uranium and fission products from the fuel microspheres. The fuel elements of recycled ^{235}U and make-up thorium are formed from microspheres similar to those described above. The recycled ^{233}U is formed into mixed thorium oxide-uranium oxide

Table 1

HTGR Fuel Particle Descriptions[2]

Property	IM[a] Elements		^{233}U Recycle Elements		^{235}U Recycle Elements	
	Fissile Particle	Fertile Particle	Fissile Particle	Fertile Particle	Fissile Particle	Fertile Particle
Isotope	^{235}U	Th	^{233}U-Th	Th	^{235}U	Th
Kernel Composition	UC_2	ThO_2	$(4.25Th,U)O_2$	ThO_2	UC_2	ThO_2
Kernel Diameter (μm)	200	500	400	500	200	500
Type Coating [b,c]	TRISO	BISO	BISO	BISO	TRISO	BISO
Coating Thickness (μm)						
Buffer Carbon	85	85	90	85	85	85
Inner Dense Carbon	25				25	
Silicon Carbide (SiC)	25				25	
Outer Carbon	35	75	80	75	35	75
Total Particle Diameter (μm)	540	820	740	820	540	820

(a) For initial and make-up loadings.

(b) A TRISO coating consists of a buffer layer surrounding the UC_2 kernel, followed by successive layers of dense pyrolytic carbon, silicon carbide, and dense pyrolytic carbon.

(c) A BISO coating consists of a buffer layer and a single layer of dense pyrolytic carbon.

microspheres with a thorium-to-uranium ratio of 4.25. The steam generated by the hot helium coolant from the reactor is at higher temperature and pressure than the steam generated in water reactors, resulting in an overall thermal efficiency of 38.7%. For a net electrical output of 1000 Mw the resulting thermal power is 2583.9 Mw.

The average thermal specific power in the reactor core is 64.57 Mw per Mg of uranium and thorium in the fresh fuel. Each year one fourth of the reactor fuel, contained within 900 graphite fuel blocks, is discharged and replaced with fresh fuel, so that each fuel element remains within the reactor for four years[3,4]. At an average load factor of 80% the resulting average thermal exposure is 94,270 Mw days per Mg of uranium and thorium charged. Calculated[5] compositions of make-up uranium and recycled uranium are listed in Table 2. Also listed are the calculated isotopic compositions of the fresh fuel and discharge fuel for each of the three fuel types.

The quantities of make-up thorium and make-up enriched uranium required for yearly operation then provide the basis for calculating the required amounts of natural uranium and thorium that must be mined and processed to sustain the fuel cycle. Figure 3 is a flowsheet which presents the overall material and environmental effluents. A more detailed flowsheet of the fuel actinides is shown in Figure 4.

TABLE 2

Calculated Uranium Composition of HTGR Fuel Particles

Fresh Make-up ^{235}U Particles

Reactor Input Composition

Nuclide	%
^{234}U	0.84
^{235}U	93.5
^{238}U	5.66
	100.00

Discharge Composition

Nuclide	%
^{232}U	3×10^{-6}
^{234}U	0.03
^{235}U	21.7
^{236}U	55.7
^{237}U	0.23
^{238}U	22.3
	100.0

Recycled ^{235}U Particles

Reactor Input Composition

Nuclide	%
^{232}U	3×10^{-6}
^{234}U	0.03
^{235}U	21.9
^{236}U	55.8
^{238}U	22.3
	100.0

Discharge Composition

Nuclide	%
^{232}U	7×10^{-6}
^{234}U	0.07
^{235}U	1.96
^{236}U	63.7
^{237}U	0.3
^{238}U	34.0
	100.0

TABLE 2 (continued)

Recycled ^{233}U Particles

Reactor Input Composition		Discharge Composition	
Nuclide	%	Nuclide	%
^{232}U	0.03	^{232}U	0.03
^{233}U	55.4	^{233}U	52.8
^{234}U	23.3	^{234}U	24.5
^{235}U	9.5	^{235}U	10.1
^{236}U	11.5	^{236}U	12.2
^{238}U	0.3	^{237}U	0.05
	100.0	^{238}U	0.3
			100.0

FLOW QUANTITIES ARE STATED IN METRIC TONS/YEAR
UNLESS OTHERWISE INDICATED

80% CAPACITY FACTOR

EVAPORATIVE COOLING TOWER FOR WASTE HEAT REJECTION

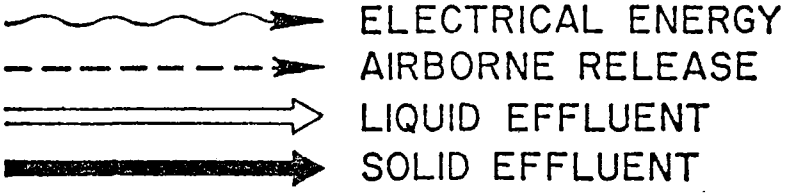

Mg	=	METRIC TONS
Ci	=	CURIES
kwh	=	KILOWATT-HOURS
Mw	=	MEGAWATTS ELECTRICAL
MPC	=	MAXIMUM PERMISSABLE CONCENTRATION

Figure 3 (a) Uranium-Thorium Fueled Gas-Cooled Reactor 1000 Mw
Basis: 1 Year, 80% Load Factor

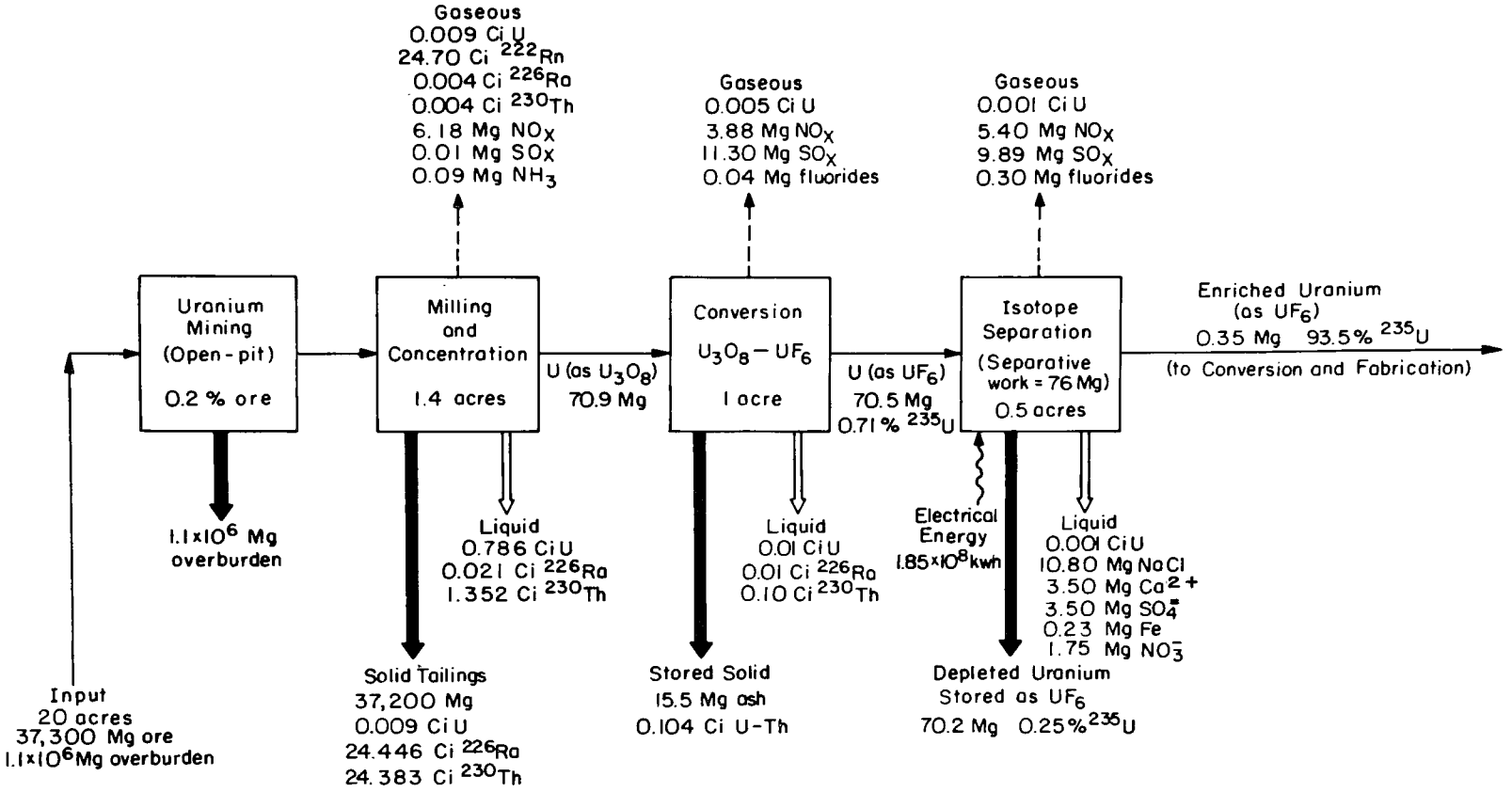

Figure 3(b) Uranium-Thorium Fueled Gas-Cooled Reactor 1000 Mw
Basis: 1 Year, 80% Load Factor

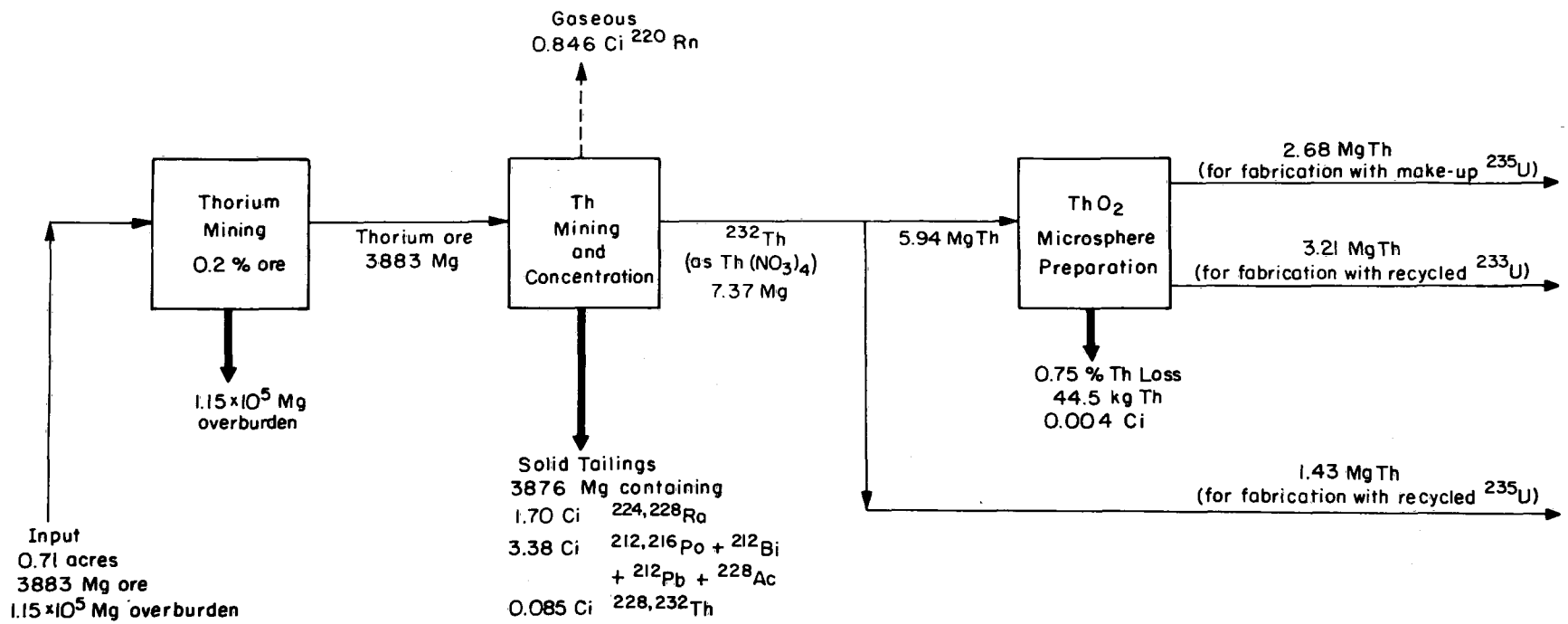

Figure 3 (c) Uranium-Thorium Fueled Gas-Cooled Reactor 1000 Mw
Basis: 1 Year, 80% Load Factor

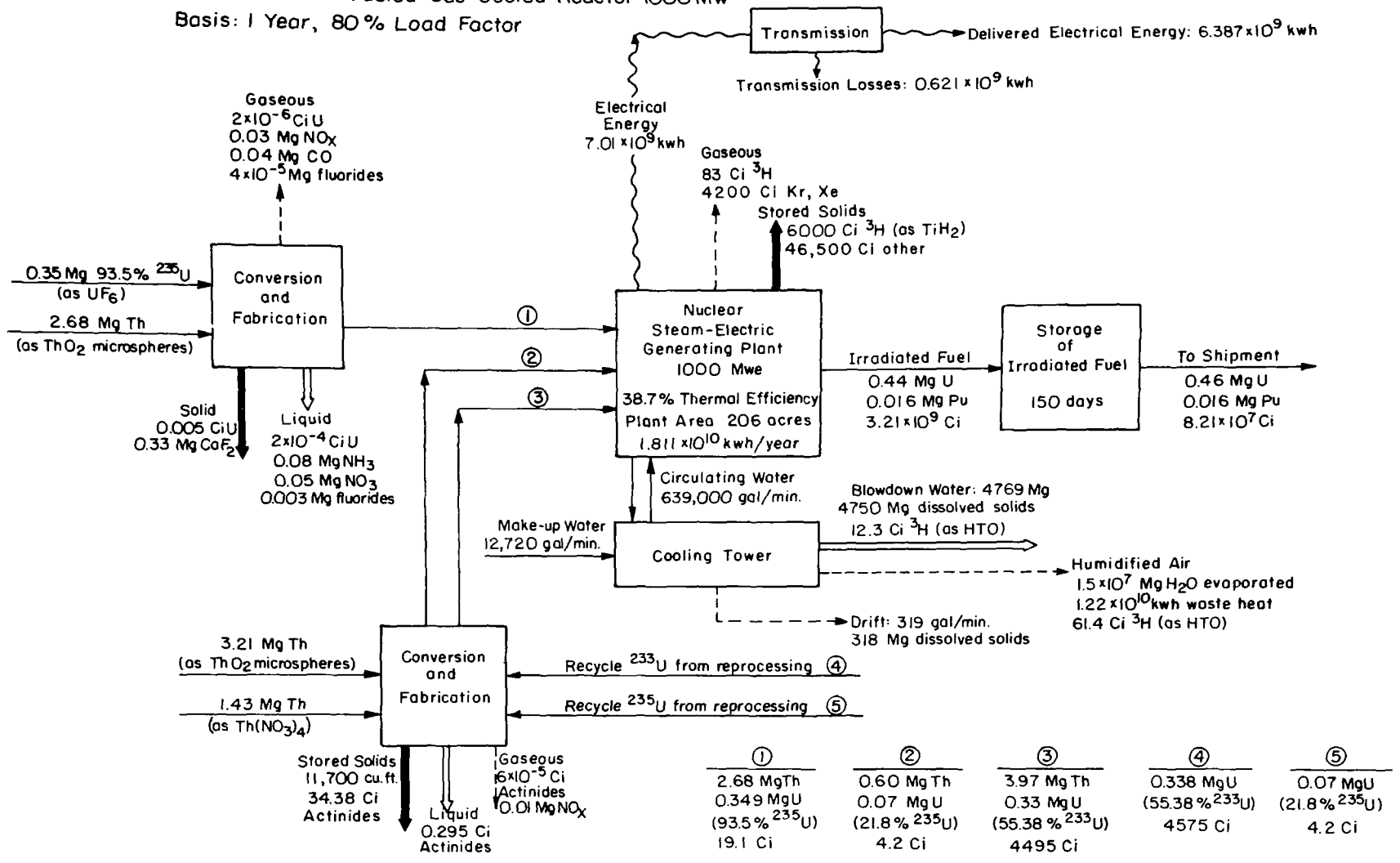

Figure 3(d) Uranium-Thorium Fueled Gas-Cooled Reactor 1000 Mw
Basis: 1 Year, 80% Load Factor

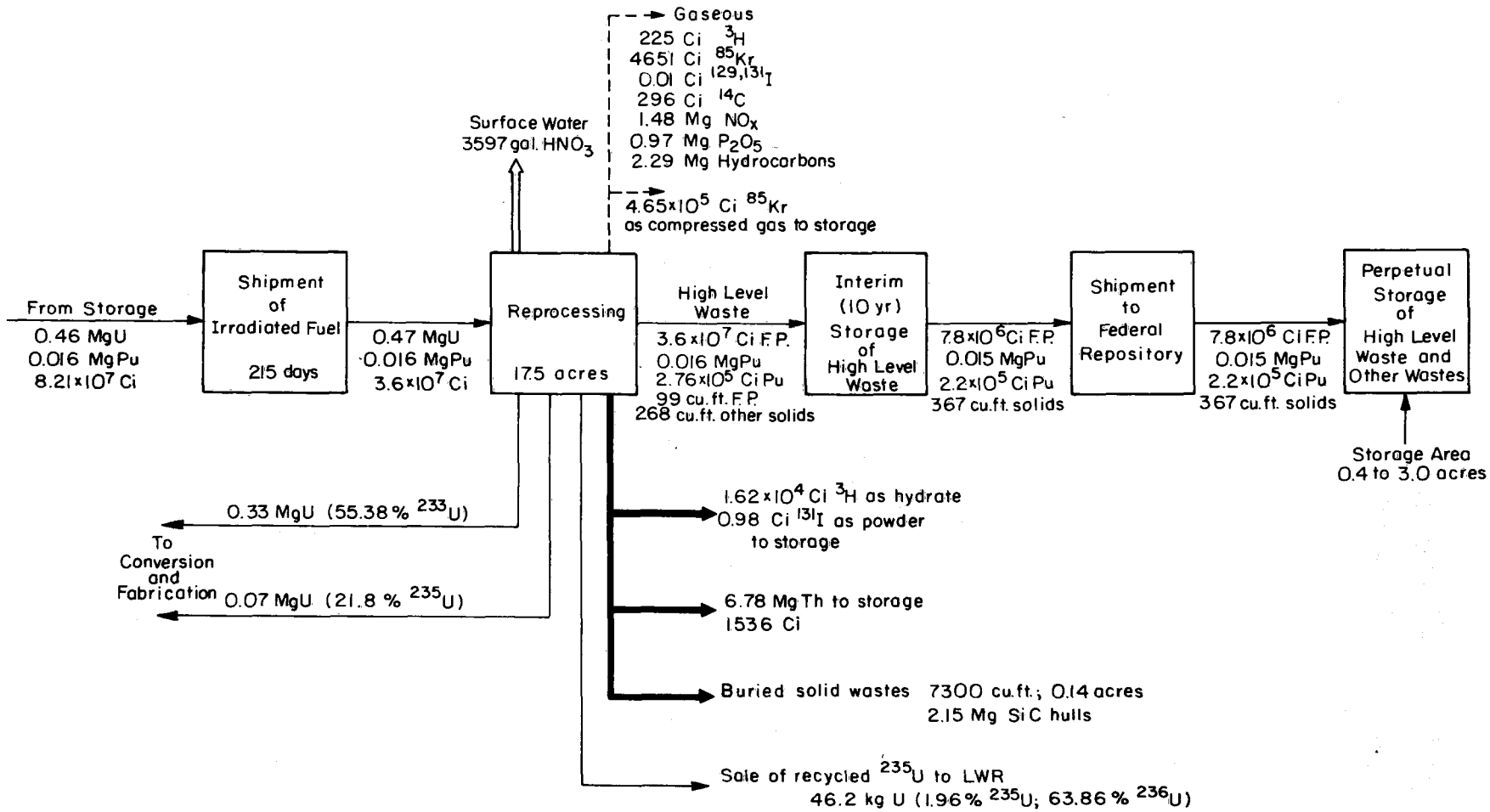

FLOW QUANTITIES ARE STATED IN METRIC TONS/YEAR UNLESS OTHERWISE INDICATED

80% CAPACITY FACTOR

EVAPORATIVE COOLING TOWER FOR WASTE HEAT REJECTION

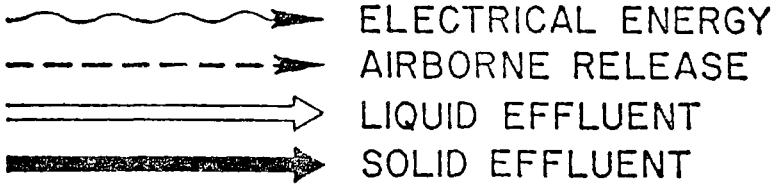

Mg	=	METRIC TONS
Ci	=	CURIES
kwh	=	KILOWATT-HOURS
Mw	=	MEGAWATTS ELECTRICAL
MPC	=	MAXIMUM PERMISSABLE CONCENTRATION

Figure 4

1000Mw HTGR FUEL FLOWSHEET

Yearly Quantities

80% Load Factor

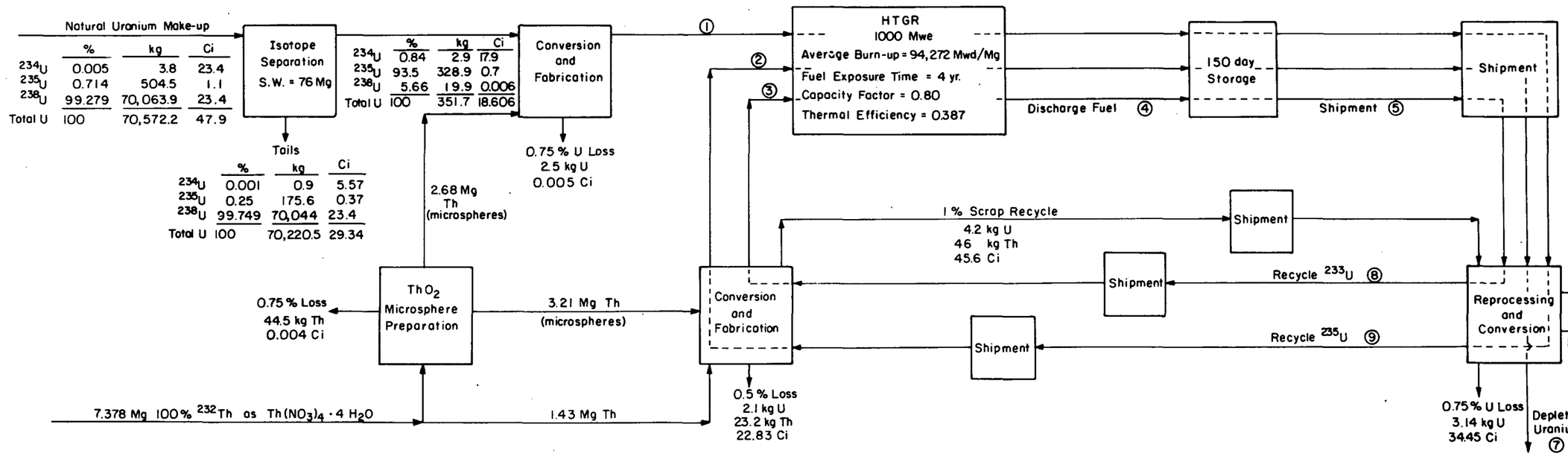

3. Mining, Milling, and Concentration

Environmental effluents from mining uranium ore are calculated from the data presented in the Part I report, "Fuel Cycles for Electrical Power Generation"[1], scaled according to uranium throughput. Solid and liquid effluents from milling and concentration are also based upon the Part I data, but the gaseous effluents are derived in part from the data for a plant operating at a capacity of 2000 ton/day (1814 Mg/day)[6], with the following estimated gaseous releases:

TABLE 3

Gaseous Effluents from Milling and Concentration of 2000 ton/day of Uranium

uranium	439	Ci/day
^{226}Ra	185	Ci/day
^{230}Th	185	Ci/day
SO_2	460	lb/yr
NO_2	3.5×10^4	lb/yr
NH_3	3.5×10^3	lb/yr

The effluents on the present flowsheet are then scaled from the data in Table 3 according to uranium throughput. A 5% loss in uranium milling and concentration is assumed[7].

Material quantities of thorium ore mined yearly are based upon an assumed[7] thorium concentration of 0.2%, the same as in uranium ore, although some domestic ores contain thorium at concentrations as high as 2%[8].

Thorium is extracted from the ore by a sulfuric-acid process or by a caustic-treatment process. The thorium concentrate is purified by solvent extraction from an aqeuous nitrate solution. The radioactive effluents from thorium milling and concentration are calculated from the quantities of ^{232}Th decay daughters, according to the decay scheme in Figure 5. The ^{232}Th half life of 1.41×10^{10} yr corresponds to a radioactivity level of 0.109 Ci of ^{232}Th per metric ton (Mg) of thorium. When in secular equilibrium the ^{228}Th content is also 0.109 Ci per metric ton of total thorium. Similarly, for each metric ton of thorium processed, 0.109 Ci of gaseous ^{220}Rn is released and 0.218 Ci of ^{224}Ra and ^{228}Ra appear as radium salts in the solid tailings.

Because of the relatively long half life of ^{232}Th, the amount of radium activity per unit mass of heavy metal processed is less than in the processing of natural uranium. Because of the 5.75-yr half life of ^{228}Ra, the radioactivity in the radium salts from thorium concentration will persist for only a few decades, whereas the 1622-yr ^{226}Ra from uranium concentration presents a far more persistent radioactive waste. However, the decay of the radium daughters from thorium is accompanied by the very energetic and penetrating gammas from ^{212}Bi and ^{208}Tl, which remain in secular equilibrium with ^{224}Ra.

FIGURE 5

Radioactive Decay of Natural Thorium

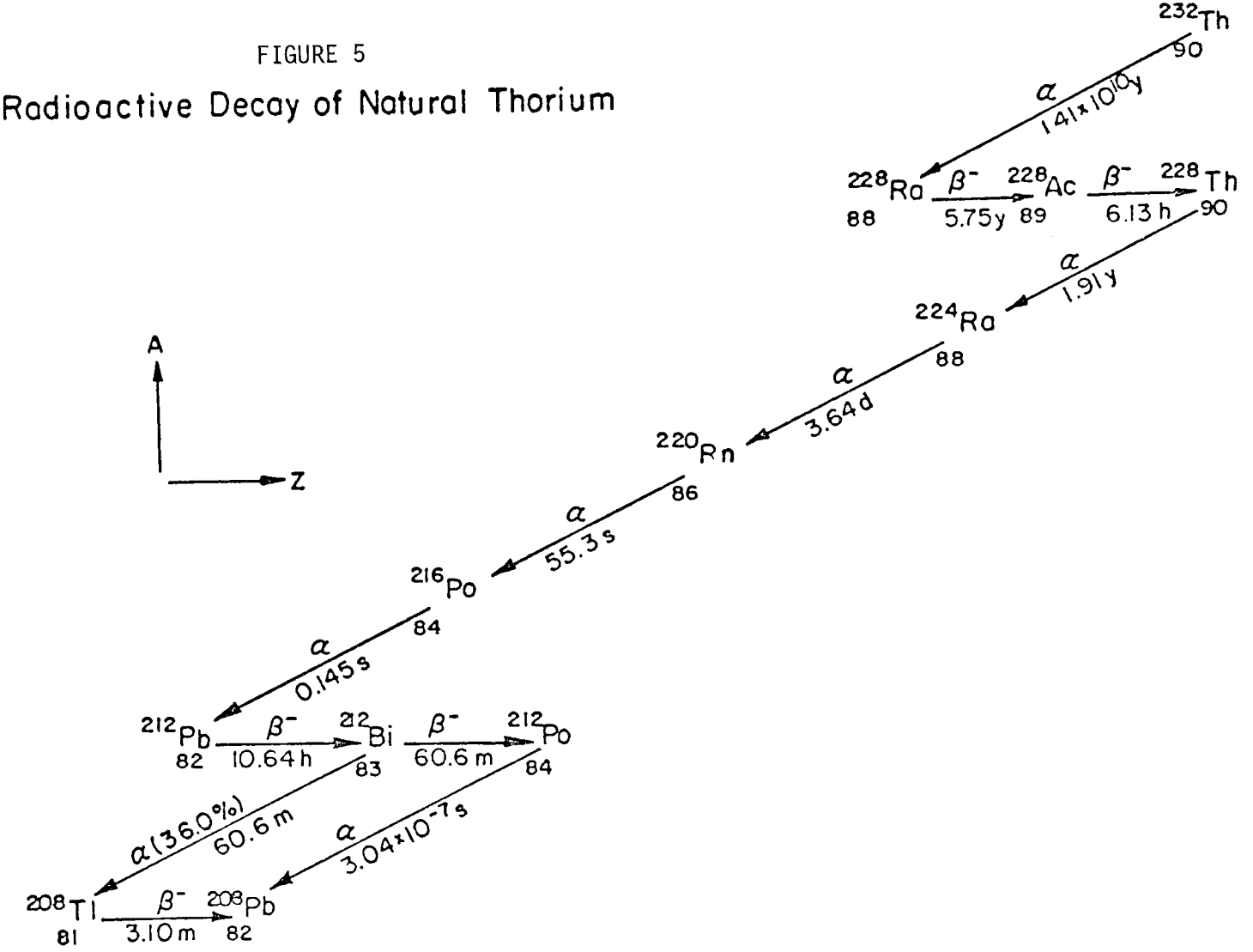

After purification the thorium radioactivity begins to increase due to the build-up of the decay daughters of ^{228}Th. Since these have short half lives the radioactivity reaches a maximum after about 3 years and then declines, due to the decay of 1.91-yr ^{228}Th. Finally, after about 10 years the activity level increases again as ^{228}Ra and its decay daughters begin to approach equilibrium. The release of gaseous ^{220}Rn from materials containing purified thorium is a health hazard, requiring adequate ventilation. Purified uranium does not have this problem because of the long half life of ^{230}Th.

Some ores may contain both uranium and thorium, and the resulting thorium concentrate may contain trace quantities of the ^{230}Th formed by ^{238}U decay. This can contribute appreciably to the activity level of pure thorium. For example, 100 ppm of ^{230}Th in ^{232}Th contributes 1.9 Ci to the alpha activity of a metric ton of purified ^{232}Th, as compared with 0.218 Ci from ^{232}Th and ^{228}Th. However, the decay daughters of ^{230}Th do not build up to any appreciable quantities in the purified thorium. The trace ^{230}Th is most important in affecting the amount of 72-yr ^{232}U that is formed in irradiated thorium, as explained in Section 6.

4. Conversion of U_3O_8 to UF_6 and Uranium Enrichment

The effluents due to chemical conversion of U_3O_8 to UF_6 are based upon data in Fuel Cycles - Part I[1] for similar operations, scaled to the uranium throughput. The effluents from uranium isotope separation are scaled according to separative work[1]. For an enrichment of 0.25% for depleted uranium the yearly separative work is calculated to be 76 Mg, corresponding to a yearly electrical energy requirement of 1.85×10^8 kwh. This represents 2.3% of the net electrical output of the HTGR power plant*.

5. Conversion and Fabrication of Initial Make-Up Fuel

The highly enriched (93.5%) uranium hexafluoride from isotope separation is fabricated into 200-micron microspheres by the Sol-Gel Process[9]. Fabrication wastes are calculated on the basis of a 0.75% fuel loss[2].

6. Fabrication of Recycle Fuel

After a four-year irradiation cycle the fuel blocks containing the make-up ^{235}U are discharged for reprocessing. The uranium remaining in the initial-make-up microspheres is recycled for one more irradiation cycle, after which

* These data refer to the equilibrium fuel cycle wherein much of the fissile content of fresh fuel results from recycled ^{233}U. The start-up fuel cycles require greater yearly quantities of make-up ^{235}U and greater amounts of separative work.

it is discharged because of its low ^{235}U content (1.96%) and high ^{236}U content (63.7%). The thorium in each of the three fuel types generates fissionable ^{233}U by the neutron-capture reactions shown in Figure 1:

$$^{232}Th \xrightarrow{n,\gamma} {}^{233}Th \xrightarrow[22.2m]{\beta^-} {}^{233}Pa \xrightarrow[27.0d]{\beta^-} {}^{233}U$$

Neutron-capture reactions in ^{233}U generate ^{234}U, ^{235}U, and ^{236}U. The discharge isotopic composition is shown in Table 2. The uranium recovered from the thorium microspheres and from the microspheres formed from thorium and recycled ^{233}U is recycled for fabrication. The fabrication of recycled ^{233}U requires semi-remote fabrication and careful confinement to minimize effluents because of the content of alpha-emitting ^{232}U and its decay daughters. The ^{232}U is formed by fast-neutron (n, 2n) reactions in ^{232}Th and ^{233}U according to:

$$^{232}Th \xrightarrow{(n,\,2n)} {}^{231}Th \xrightarrow[25.5h]{\beta^-} {}^{231}Pa \xrightarrow{(n,\,\gamma)} {}^{232}Pa \xrightarrow[1.32d.]{\beta^-} {}^{232}U$$

and $$^{233}U \xrightarrow{(n,\,2n)} {}^{232}U$$

It is also formed by the chain initiating with ^{235}U:

$$^{235}U \xrightarrow{(n,\gamma)} {}^{236}U \xrightarrow{(n,\gamma)} {}^{237}U \xrightarrow[6.75d.]{\beta^-} {}^{237}Np \xrightarrow{(n,2n)} {}^{236}Np \xrightarrow[22h]{\beta^-} {}^{236}Pu \xrightarrow[2.85y]{\alpha} {}^{232}U$$

Although chemical processing yields essentially pure uranium, storage after separation and time elapsed in shipping to fabrication allow the build-up of 1.91-y ^{228}Th, the decay daughter of ^{232}U, which is in secular equilibrium with its decay daughters as shown in Figure 5. The total activity level from ^{232}U

and its daughters increases continuously after uranium separation until it reaches a maximum at about ten years after separation. The energetic gammas accompanying the decay of ^{212}Bi and the 2.6-Mev gamma from ^{208}Tl will require special shielding in handling and fabricating recycled uranium containing ^{232}U. Shielding is also to attenuate neutrons formed by (α,n) reactions of the alphas in the $^{232,233}U$ chains with the light elements, e.g., oxygen, present in processing and fabrication operations.

The ^{232}U content in the recycle ^{233}U is calculated[5] to be 318 ppm*, resulting in a ^{232}U alpha activity of 2307 Ci in the yearly amount of recycle uranium. The recycle uranium also contains 1778 Ci/yr of ^{233}U.

The Sol-Gel refabrication operations include sol preparation from the UO_3 feed, microsphere preparation, microsphere coating, fuel-stick fabrication, and assembly into graphite fuel blocks. Uranium losses to process wastes are estimated at 0.5% of the throughput[7]. Reject of finished fuel results in recycle of 1% of the fuel as scrap for reprocessing[10]. Environmental effluents and solid wastes are based upon estimates in the 1974 environmental statement[10] for the HTGR Fuel Refabrication Pilot Plant to be constructed in Idaho, scaled according to uranium throughput from the data listed in Table 4.

---

* Calculated on the basis of 100% ^{232}Th in natural thorium. Some natural thorium contains trace quantities of ^{230}Th, a decay product of ^{238}U and evidently occurring because of co-existing uranium deposits. Neutron-capture in ^{230}Th leads eventually to ^{232}U, according to the reactions illustrated in Figure 1. A typical concentration of 100 ppm of ^{230}Th in the thorium makeup is calculated to increase the equilibrium ^{232}U concentrations in the recycled uranium to 876 ppm, resulting in an increase in the ^{232}U activity to 6355 Ci/yr.

Table 4

Effluents and Solid Wastes from HTGR Fuel Refabrication[10]
(Based on 25 Kg of U+Th/day)

GASEOUS EFFLUENTS

Chemical	Annual Release Rate (Mg/yr)
CO	2.7
NO_x	0.124
CO_2	53.0
H_2	1.8
Surfactant	0.0033

Radionuclides	Annual Release Rate (Ci/yr)
U	5.0×10^{-3}
^{212}Bi	4.0×10^{-7}
$^{212,216}Po$	4.02×10^{-5}
$^{228,224}Ra$	4.0×10^{-5}
^{220}Rn	4.0×10^{-5}
$^{228,232}Th$	4.09×10^{-6}
^{208}Tl	1.5×10^{-7}

Table 4 (Continued)

LIQUID EFFLUENTS

Radionuclides	Annual Release Rate (Ci/yr)
U	2.55
^{212}Bi	0.02
$^{212,216}Po$	0.033
^{220}Rn	0.02
^{224}Ra	0.02
$^{228,232}Th$	0.006
^{208}Tl	0.073

SOLID WASTES

Chemical	Annual Release Rate (Mg/yr)
Ash	0.004
NaCl	3.3
SiC	0.21
$NaNO_3$	5.2
$NaHCO_3$	2.6
Volume of α-contaminated solids	3×10^3 cu. ft/yr

Table 4 (Continued)

Radionuclides	Annual Release Rate (Ci/yr)
U	25.5
^{212}Bi	0.20
^{212}Pb	0.20
$^{212,216}Po$	0.33
^{224}Ra	0.20
^{220}Rn	0.20
$^{228,232}Th$	0.204
^{208}Tl	0.073

7. Nuclear Power Plant Operation

7.1 Radionuclide Inventories

The inventories of radionuclides calculated[5] for the 1000 Mw HTGR operating with an equilibrium fuel cycle are shown in Tables 5 and 6. The inventories are calculated on the assumption that all fuel blocks are at the discharge composition. Also tabulated are the calculated material and radioactivity quantities in the fuel discharged yearly, calculated at the time of discharge, after one year of pre-processing cooling, and after ten years.

7.2 Tritium

The tritium inventory listed in Table 5 is that calculated from ternary fission only. Tritium is also formed by fast-neutron reactions with boron control absorbers, with lithium impurities in the graphite, and by (n,p) reactions with ^{3}He present at 200 ppb in the helium coolant. The rates of release of tritium to the coolant, estimated from data supplied by Goodjohn[11], are given in Table 7.

Table 5

Radionuclides in 1000 Mw HTGR Reactor and in Discharge Fuel*

Radionuclides		Half Life	Reactor Inventory	In Discharge Fuel 10^6 Ci./yr.		
			10^6 Curies	At Discharge	365 Days Decay	10 Yrs. Decay
Fission Products						
Tritium	^3H	12.26 yr.	0.095	0.023	0.022	0.013
Krypton	83m	1.86 hr.	13.088	3.272	0	0
	85m	4.4 hr.	35.579	8.894	0	0
	85	10.76 yr.	2.003	0.500	0.469	0.263
	87	76 m.	67.369	16.842	0	0
	88	2.8 hr.	81.691	20.422	0	0
	89	3.18 m.	88.531	22.132	0	0
	90	33 sec..	83.040	20.760	0	0
TOTAL*			469.790	117.447	0.469	0.263
Strontium	89	52.7 d.	93.380	23.345	0.179	1.73×10^{-20}
	90	27.7 yr.	9.318	2.329	2.273	1.820
TOTAL*			566.446	141.611	2.453	1.820
Iodine	129	1.7×10^7 yr.	3.96×10^{-6}	9.914×10^{-7}	9.986×10^{-7}	9.986×10^{-7}
	131	8.05 d.	49.515	12.378	2.86×10^{-13}	0
	132	2.26 hr.	76.328	19.083	2.96×10^{-33}	0
	133	20.3 hr.	100.765	25.191	0	0
	134	52.2 m.	105.100	26.275	0	0
	135	6.68 hr.	86.219	21.554	0	0
	136	83 sec..	35.194	8.798	0	0
TOTAL*			766.500	191.625	9.986×10^{-7}	9.986×10^{-7}
Xenon	131m	11.8 d.	0.401	0.100	1.55×10^{-10}	0
	133m	2.26 d.	2.463	0.615	2.43×10^{-49}	0
	133	5.27 d.	100.605	25.151	4.38×10^{-20}	0
	135m	15.6 m.	26.363	6.590	0	0
	135	9.14 hr.	13.958	3.489	0	0
	137	3.9 m.	107.123	26.780	0	0
	138	17.5 m.	104.394	26.098	0	0
	139	43 sec.	89.687	22.421	0	0
TOTAL*			533.050	133.262	1.55×10^{-10}	0
Cesium	134	2.046yr.	25.319	6.329	4.514	0.215
	137	30.0 yr.	9.777	2.444	2.389	1.940
TOTAL*			535.619	133.904	6.903	2.156
Rb, Y, Zr, Nb, Mo, Tc, Ru, Rh, Pd, Ag, Cd, In, Sn, Sb			4057.222	1014.305	6.188	1.838

Table 5 (continued)

Radionuclides in 1000 Mw HTGR Reactor and in Discharge Fuel

Radionuclides	Half Life	Reactor Inventory	In Discharge Fuel 10^6 Ci./yr.		
		10^6 Curies	At Discharge	365 Days Decay	10 Yrs. Decay
Fission Products					
Rare Earths: La, Ce, Pr, Nd, Pm, Sm, Eu, Gd, Tb, Dy, Ho		1570.843	392.710	18.912	0.193
TOTAL Fission Products		9456 (3.169 Mg)		36.454	8.100
Actinides					
Thorium		1525.295 (26.938 Mg)	381.323	0.001	0.002
Protactinium		1527.542 (0.072 Mg)	381.885	0.035	2.499×10^{-5}
Uranium		177.640 (1.782 Mg)	44.434	4.560×10^{-3}	4.374×10^{-3}
Plutonium		5.900 (0.064 Mg)	1.477	0.276	0.230
Am, Cm, Bk, Cf, Es		3.065 (0.002 Mg)	0.767	0.026	0.012
TOTAL Actinides		3381 (28.962 Mg)	846	0.354	0.262
Light Elements					
Be, C, Cr, Mn, Fe, Co, Hi, Cu		0.113 (257.56 Mg)	0.028	0.003	0.0006
Total Fuel and Block					
Fission Products, Actinides and Light Elements		12,838 (289.697 Mg)	3210	36.811	8.362

* Total radioactivity includes short-lived species not listed in the table. Calculated for 38.7% thermal efficiency, average thermal exposure of 94,270 Mw days per Mg of uranium and thorium charged, equilibrium fuel cycle. Tritium quantities are for ternary fission. Fission-product quantities are not corrected for releases during reactor operation.

Table 6

Actinides in 1000 Mw HTGR Reactor and in Discharge Fuel*

Radionuclides		Half Life	Reactor Inventory		In Discharge Fuel		Shipped to Reprocessing (365 Days)	
			Kg.	Curies	Kg./Yr.	Ci./Yr.	Kg./Yr.	Ci./Yr.
Thorium	227	18.2 d.	5.42×10^{-8}	1.714	1.35×10^{-8}	0.428	1.95×10^{-8}	0.618
	228	1.91 yr.	5.818×10^{-3}	4778.321	1.454×10^{-3}	1194.458	1.866×10^{-3}	1532.602
	229	7340 yr.	1.298×10^{-2}	2.773	3.245×10^{-3}	0.694	4.021×10^{-3}	0.860
	230	8.0×10^{4} yr.	2.146×10^{-2}	0.417	5.365×10^{-3}	0.104	5.582×10^{-3}	0.108
	231	25.52 hr.	1.500×10^{-3}	7.957×10^{5}	3.752×10^{-4}	1.989×10^{5}	2.03×10^{-10}	0.107
	232	1.41×10^{10} yr.	2.693×10^{4}	2.945	6734.579	0.794	6734.597	0.736
	233	22.12 m.	4.171×10^{-2}	1.523×10^{9}	1.042×10^{-2}	3.808×10^{8}	0	0
	234	24.1 d.	1.019×10^{-2}	2.361×10^{5}	2.548×10^{-3}	5.903×10^{4}	7.08×10^{-8}	7.640
TOTAL			2.693×10^{4}	1.524×10^{9}	6734.579	3.810×10^{8}	6734.597	1536.666
Protactinium	231	3.25×10^{4} yr.	0.549	26.151	0.137	6.537	0.137	6.555
	232	1.31 d.	1.504×10^{-3}	6.419×10^{5}	3.761×10^{-4}	1.604×10^{5}	0	0
	233	27.0 d.	71.769	1.468×10^{9}	17.942	3.670×10^{8}	1.754×10^{-3}	3.590×10^{4}
	234m	1.175 m.	4.315×10^{-5}	2.964×10^{7}	1.078×10^{-5}	7.412×10^{6}	2.37×10^{-12}	1.640
	234	6.75 hr.	1.414×10^{-2}	2.806×10^{7}	3.535×10^{-3}	7.017×10^{6}	8.26×10^{-13}	0.001
TOTAL			72.315	1.526×10^{9}	18.078	3.816×10^{8}	0.139	3.591×10^{4}
Uranium	232	72 yr.	0.431	9.242×10^{3}	0.107	2310.547	0.107	2296.220
	233	1.62×10^{5} yr.	674.983	6.396×10^{3}	168.745	1599.151	186.729	1769.343
	234	2.47×10^{5} yr.	313.417	1.939×10^{3}	78.354	484.844	78.440	485.414
	235	7.1×10^{8} yr.	201.396	0.431	50.349	0.107	50.349	0.107
	236	2.39×10^{9} yr.	451.680	28.640	112.920	7.160	112.920	7.160
	237	6.75 d.	1.852	1.512×10^{8}	0.463	3.780×10^{7}	2.92×10^{-8}	2.378
	238	4.51×10^{9} yr.	138.458	0.046	34.614	0.011	34.614	0.011
	239	23.54 m.	7.873×10^{-4}	2.637×10^{7}	1.968×10^{-4}	6.592×10^{6}	0	0
TOTAL			1782.508	1.776×10^{8}	445.627	4.441×10^{7}	463.120	4560.071
Neptunium	236	22 h.	9.57×10^{-7}	578.391	2.394×10^{-7}	144.597	0	0
	237	2.14×10^{6} yr.	102.663	72.388	25.665	18.097	26.125	18.423
	238	2.1 d.	0.449	1.175×10^{8}	0.112	2.938×10^{7}	0	0
	239	2.346 d.	0.113	2.630×10^{7}	2.827×10^{-2}	6.576×10^{6}	2.837×10^{-7}	65.981
	240m	7.3 m.	3.73×10^{-24}	4.0×10^{-13}	9.32×10^{-25}	1.00×10^{-13}	3.43×10^{-24}	3.68×10^{-13}
	240	63 m.	4.96×10^{-6}	6.176×10^{4}	1.241×10^{-6}	1.544×10^{4}	0	0
TOTAL			103.238	1.438×10^{8}	25.809	3.597×10^{7}	26.125	84.413

Table 6 (continued)

Actinides in 1000 Mw HTGR Reactor and in Discharge Fuel

Radionuclides		Half Life	Reactor Inventory		In Discharge Fuel		Shipped to Reprocessing (365 Days)	
			Kg.	Ci.	Kg./Yr.	Ci./Yr.	Kg./Yr.	Ci./Yr.
Plutonium	236	2.85 yr.	1.666×10^{-4}	88.605	4.165×10^{-5}	22.151	3.277×10^{-5}	17.429
	238	86.4 yr.	41.834	7.063×10^{5}	10.458	1.765×10^{5}	10.498	1.772×10^{5}
	239	24390 yr.	9.195	563.973	2.298	140.993	2.326	142.735
	240	6580 yr.	5.472	1.206×10^{3}	1.368	301.566	1.375	303.236
	241	13.2 yr.	4.082	4.148×10^{5}	1.020	1.037×10^{5}	0.973	9.891×10^{4}
	242	3.79×10^{5} yr.	4.028	15.712	1.007	3.928	1.007	3.928
	243	4.98 h.	1.844×10^{-3}	4.776×10^{6}	4.610×10^{-4}	1.194×10^{6}	2.31×10^{-15}	5.993×10^{-6}
	244	7.6×10^{7} yr.	2.26×10^{-11}	4.01×10^{-13}	5.66×10^{-12}	1.00×10^{-13}	2.08×10^{-11}	3.69×10^{-13}
	245	10.1 h.	1.01×10^{-16}	1.22×10^{-7}	2.53×10^{-17}	3.05×10^{-8}	0	0
TOTAL			64.617	5.900×10^{6}	16.154	1.475×10^{6}	16.183	2.767×10^{5}
Americium	241	458 yr.	8.266×10^{-2}	283.255	2.066×10^{-2}	70.813	6.787×10^{-2}	232.607
	242m	152 yr.	1.278×10^{-3}	12.437	3.197×10^{-4}	3.109	3.183×10^{-4}	3.094
	242	16.01 h.	3.687×10^{-4}	2.986×10^{5}	9.218×10^{-5}	7.465×10^{4}	3.822×10^{-9}	3.094
	243	7.95×10^{3} yr.	1.370	263.635	0.342	65.908	0.342	65.981
	244	10.1 h.	8.507×10^{-5}	2.522×10^{6}	2.126×10^{-5}	6.305×10^{5}	1.61×10^{-26}	4.80×10^{-16}
	245	2.07 h.	1.73×10^{-15}	1.07×10^{-5}	4.34×10^{-16}	2.686×10^{-6}	1.92×10^{-16}	1.189×10^{-6}
TOTAL			1.454	2.821×10^{6}	0.363	7.054×10^{5}	0.411	304.802
Curium	242	162.5 d.	5.357×10^{-2}	1.774×10^{5}	1.339×10^{-2}	9.435×10^{4}	2.853×10^{-3}	9449.605
	243	32 yr.	9.054×10^{-4}	41.638	2.263×10^{-4}	10.409	2.214×10^{-4}	10.786
	244	17.6 yr.	0.832	6.746×10^{4}	0.208	1.686×10^{4}	0.200	1.623×10^{4}
	245	9.3×10^{3} yr.	4.247×10^{-2}	7.503	1.061×10^{-2}	1.875	1.061×10^{-2}	1.875
	246	5.5×10^{3} yr.	1.487×10^{-2}	4.590	3.718×10^{-3}	1.147	3.718×10^{-3}	1.147
	247	1.6×10^{7} yr.	2.715×10^{-4}	2.397×10^{-5}	6.788×10^{-5}	5.993×10^{-6}	6.788×10^{-5}	5.993×10^{-6}
	248	4.7×10^{5} yr.	3.423×10^{-5}	1.402×10^{-4}	8.557×10^{-6}	3.506×10^{-5}	8.562×10^{-6}	3.508×10^{-5}
	249	64 m.	4.56×10^{-10}	5.384	1.14×10^{-10}	1.346	2.87×10^{-22}	3.39×10^{-12}
	250	1.7×10^{4} yr	7.38×10^{-13}	6.07×10^{-11}	1.84×10^{-13}	1.51×10^{-11}	1.85×10^{-13}	1.52×10^{-11}
TOTAL			0.945	2.449×10^{5}	0.236	6.123×10^{4}	0.217	2.570×10^{4}
Berkelium	249	314 d.	4.23×10^{-7}	0.707	1.059×10^{-7}	0.176	4.74×10^{-8}	0.079
	250	193.3 m.	6.29×10^{-10}	2.474	1.57×10^{-10}	0.618	3.90×10^{-21}	1.52×10^{-11}
TOTAL			4.24×10^{-7}	3.182	1.060×10^{-7}	0.795	4.74×10^{-8}	0.130
TOTAL ACTINIDES			2.896×10^{4}	3.380×10^{9}	7240.399	8.456×10^{8}	7235.237	3.447×10^{5}

* Total radioactivity includes short-lived species not listed in the table. Calculated for 38.7% thermal efficiency, average thermal exposure of 94,270 Mw days per Mg of uranium and thorium charged, equilibrium fuel cycle.

Table 7

Estimated Rate of Release of Tritium to Helium Coolant in 1000 Mw HTGR

	Ci/yr
Ternary Fission	4800
Boron (n,T)	1000
^{3}He (n,p)	3300
Total	9100

Most of the tritium released to the helium coolant is removed as solid tritide formed by reaction with hot titanium in the helium purification system. The main environmental release of tritium in the HTGR results from the diffusion of tritium from the helium stream through the heat exchange surfaces in the steam generator and thence into the steam system. Since the tritium reaches the steam as atomic and molecular hydrogen, and since, in the absence of catalysis by radiation or by activated surfaces, the rate of isotopic exchange between gaseous hydrogen and water is slow[8], the tritium reaching the steam is likely to escape as gaseous hydrogen effluent through the ejector which continuously removes noncondensables from the turbine exhaust. However, estimates in reference (4) indicate that much of the tritium escaping to the steam system appears ultimately as tritiated water (HTO). For the purpose of the present flowsheet, it is assumed that this tritiated water follows steam-condensate blowdown and other liquid wastes from the steam system. It is assumed that these liquids are discharged into the circulating water in the evaporative cooling system. The tritium is

ultimately released to the environment as tritiated water by evaporation in the cooling tower and by blowdown of circulating water in the evaporative cooling system. Using data for tritium releases in reference (4) and the cooling-system evaporation and blowdown calculated for this study, the tritium releases for a 1000 Mw plant have been estimated and are listed in Table 8*.

Table 8

Estimated Yearly Environmental Releases of Tritium

for a 1000 Mw HTGR

Gaseous	Ci/yr
from reactor containment building	3.7×10^{-4}
from gaseous rad-waste system	73.6
off gas from main condenser air ejector	9.19
evaporation in cooling tower	61.4
Liquid	
cooling tower blowdown	12.3

* In the more recent environmental impact statement[12] for the 1160-Mw Fulton HTGR's it is stated that about 90 Ci/yr of tritium leaks to the steam from the primary system. Most of this tritium is expected to be released to the atmosphere through the turbine building vent, part via the air ejector and deaerator and the remainder by the evaporation of all liquid wastes from the steam system. About 10 Ci/yr of tritium is expected in the cooling-tower blowdown from each of these plants.

7.3 Krypton and Xenon

Fission-product krypton and xenon escape to the coolant by diffusion through the coated fuel particles and by escape from fuel particles with defective coatings. The expected failed-fuel fraction is 0.5% or less, whereas the radionuclide control system is designed on the basis of an assumed failed-fuel fraction of 5%[4]. These noble gases are removed from the coolant by charcoal adsorbers in the helium purification system, operating at liquid nitrogen temperature. These adsorption beds must be regenerated periodically, typically about five times a year, by passing hot helium through the beds. This regeneration gas is vented to the waste-gas purification system. In the Summit plants[4] most of the noble gases in this regeneration gas is finally released through the plant vent and constitutes the major source of noble-gas effluents in normal operation. In the more recent Fulton plants[12] most of the noble gases from regeneration are recycled to the primary coolant system.

Another source of environmental release of noble-gas radionuclides is the leakage of helium coolant into the containment, and subsequent release to the surroundings by containment leakage and purging. The fractional leak rate of helium from the primary coolant circuit, as quoted by the designers[4], is 1% per year*, so there should be no appreciable loss of noble-gas radionuclides by this pathway. Other pathways for noble-gas

---

* The release estimates in Table 9 are scaled from AEC estimates based upon a leak rate of 3.65% per year[12,13].

released are leakage from the gas-treatment systems and gas vented from fuel handling, from liquid-waste receivers, and from instrumentation systems.

Estimates of the noble-gas releases expected for a 1000 Mw plant, scaled from the expected releases quoted for the Summit and Fulton technologies, are listed in Table 9. The releases would be about ten times greater than those listed if the failed-fuel fraction is the design value of 5% instead of the expected value of 0.5% on which these estimates are based.

7.4 Iodine

The HTGR fuel temperatures are high enough that fission product iodine is released from the fuel particles with essentially the same rate constant as the noble-gas fission products[4,14,15,16,17]. The graphite temperature is high enough in most of the reactor core that absorption of the iodine in graphite can be neglected. Tellurium, the iodine precursor, is also volatile at these temperatures, and experimental data[4,18,19] indicate a release rate constant only slightly lower than that for iodine.

Most of the iodine and tellurium released to the helium coolant are plated out in the primary system or are recovered in the helium purification system. The inventories of tellurium and iodine radionuclides in the helium coolant, calculated from data in the Delmarva Environmental Statement[4], are listed in Table 10.

Table 9

Estimated Yearly Releases of Noble-Gas Radionuclides as Gaseous Effluents from 1000 Mw HTGR[a]

Radionuclide	Based Upon Summit Plant Technology[b] Ci/yr	Based Upon Fulton Plant Technology[c] Ci/yr
^{83m}Kr	44	4
^{85m}Kr	57	6
^{85}Kr	3640	0
^{87}Kr	93	8
^{88}Kr	127	13
^{89}Kr	39	3
^{90}Kr	15	1
^{91}Kr	5	—
Total Krypton	4020	35
^{133m}Xe	1	—
^{133}Xe	24	8
^{135m}Xe	46	4
^{135}Xe	46	6
^{137}Xe	14	1
^{138}Xe	26	2
^{139}Xe	5	0
^{141}Xe	3	0
Total Xenon	165	21

[a] Based upon 0.5% of fuel particles with failed coatings.

[b] Scaled to 1000 Mw from data in reference (13).

[c] Scaled to 1000 Mw from data in reference (12).

Table 10

Calculated Inventories of Tellurium and Iodine Radionuclides in Helium Coolant for 1000 Mw HTGR

	Expected[a], Ci	Design[a], Ci
^{125m}Te	4.81×10^{-5}	2.93×10^{-2}
^{127m}Te	8.20×10^{-4}	7.14×10^{-1}
^{127}Te	8.99×10^{-2}	8.04×10^{-1}
^{129m}Te	1.14×10^{-2}	1.00×10^{-1}
^{129}Te	9.77×10^{-1}	7.31×10^{2}
^{131m}Te	5.89×10^{-2}	3.85×10^{1}
^{131}Te	2.87	1.69×10^{3}
^{132}Te	3.31×10^{-1}	2.12×10^{2}
^{133m}Te	3.20	1.98×10^{3}
^{133}Te	2.38	1.33×10^{3}
^{134}Te	5.14	3.09×10^{3}
^{131}I	1.54×10^{-1}	1.04×10^{2}
^{132}I	2.04	1.30×10^{3}
^{133}I	9.06×10^{-1}	6.21×10^{2}
^{134}I	4.88	3.36×10^{3}
^{135}I	1.39	1.00×10^{3}
^{136}I	1.48×10^{-1}	4.92×10^{3}

[a] Expected releases are based upon failed coatings in an average of 0.5% of the fuel particles. Design releases are based upon 5% failed coatings.

The possible leakage of helium coolant is a mechanism by which gaseous radionuclides can be transported to the containment. The containment air is continuously treated by a kidney-type air purification system, including HEPA filters and charcoal absorbers. The estimated inventories of iodine radionuclides in the containment, scaled from data for a 2000 Mwt plant[4], are listed in Table 11.

Table 11

Calculated Inventories of Iodine Radionuclides in Reactor Containment Building Air, 1000 Mw HTGR

	Ci
^{131}I	5.46×10^{-9}
^{132}I	4.75×10^{-8}
^{133}I	3.42×10^{-8}
^{134}I	9.92×10^{-8}
^{135}I	3.95×10^{-8}

Leakage of containment building air to the surroundings is estimated[4] to result in off-site concentrations of radioiodine which are less than MPC x 10^{-5}*. The calculated yearly release of ^{131}I which would result in MPC x 10^{-5} is 0.0045 Ci/yr, based upon an average dilution factor[4] of 6.64×10^{-6} sec/m^3.

* The AEC guidelines for as-low-as-practicable releases of radionuclides for water reactors have specified off-site concentrations of radioiodine at levels of 10^4 to 10^5 below the MPC for unrestricted exposure.

7.5 Additional Airborne Releases

The leakage of primary coolant into the reactor containment building and the periodic purging of the containment building air result in additional releases of radionuclides, most of which are probably in the form of particulates. The most significant airborne radionuclides other than radioiodine are the strontium isotopes. The calculated yearly releases of airborne strontium, scaled to a 1000 Mw plant from data in the Delmarva PSAR[4], are given in Table 12.

Table 12

Calculated Annual Releases of Airborne Strontium from Reactor Containment Building Purge*, 1000 Mw HTGR

	Ci/yr
^{89}Sr	2.12×10^{-5}
^{90}Sr	1.23×10^{-8}
^{91}Sr	2.22×10^{-5}
^{92}Sr	4.06×10^{-7}
^{93}Sr	1.36×10^{-6}
^{94}Sr	1.15×10^{-6}

* Based upon a leak rate of helium coolant to the containment of 1%/yr.

If air containing these strontium particles is inhaled, the greatest bone dose results from ^{89}Sr. For a typical annual average atmospheric dilution factor 6.64×10^{-6} sec/m^3[4], these calculated releases of strontium would result in off-site concentrations about 1000 times lower than the particulate concentrations specified in the 10 CFR 50 Appendix I guidelines. The calculated allowable annual release under these guidelines is 0.014 Ci/yr for ^{89}Sr.

7.6 Solid Wastes

The principal sources of radioactive solid wastes are the solids which have been used to remove radionuclides in the helium purification system and in the radioactive gas-recovery system. From data in the Delmarva PSAR[11] it is estimated that for a 1000 Mw generating plant 6000 Ci of tritium are removed per year as solid titanium tritide on 6980 lb of titanium sponge*. The sponge will be packaged and shipped for off-site solid burial. Other radioactive solid wastes consist of replaceable graphite reflector blocks, discarded in-core instrumentation, charcoal adsorbers, HEPA filters, discarded control absorbers, soda-lime absorbent from the radioactive gas recovery system, spent radwaste demineralizer resin, spent filter cake, solidified liquid waste, and miscellaneous dry wastes. Most of this is in the form of low-level (β,γ) waste. Included are 152 graphite reflector blocks shipped yearly, containing 46,500 Ci**.

---

* A material balance using data in Tables 7 and 8 leads to an estimated 9000 Ci/yr of tritium removed on titanium sponge.

** These quantities are scaled from data in reference (12). Data in reference (13) scale to 227 blocks and 69,700 Ci/yr.

8. Shipment of Irradiated Fuel

The discharge HTGR fuel is shipped to a reprocessing plant after storage on the power plant site for 150 days for radioiodine decay. The quantities of radionuclides in the discharge fuel shipped yearly are shown in Table 5. Because of the longer fuel life in the reactor and the higher thermal efficiency, the radioactivity level in HTGR discharge fuel is about 40% less than in fuel from a water reactor, for the same preprocessing cooling period[1]. The HTGR fuel blocks are shipped in a 100-ton railroad cask with a typical capacity of 48 fuel blocks per shipping cask. For an assumed 1000-mile shipment and the use of only one shipping cask, the total hold-up time for preprocessing cooling and shipment is about one year, during which the irradiated fuel has decayed to 1.15% of its discharge radioactivity[20]. This period is ample for the decay of 27-day ^{233}Pa to ^{233}U.

9. Fuel Reprocessing and Conversion

The reprocessing operations are those outlined for an interim phase of a model HTGR fuel reprocessing facility[2]. The three types of discharge fuel blocks, as described in Section 2, are reprocessed separately to avoid mixing the three streams of fissile uranium. The graphite fuel blocks are crushed and then burned in a fluidized bed to expose the fuel microspheres. These fuel particles are separated by air elutriation into four fractions according to particle size: (1) particles formed originally from the make-up

93.5% ^{235}U, (2) particles formed from the once-recycled ^{235}U, (e) particles formed from recycled ^{233}U, and (4) thorium particles. The particle coatings are then fractured to expose the actinide cores for dissolution in nitric acid. Uranium, thorium, and fission products are partitioned by aqueous-organic extraction in the Thorex process[8].

The aqueous stream of purified thorium nitrate is concentrated by evaporation and stored at the site for future calcination. The crushed SiC hulls from the TRISO triply-coated fuel particles are combined with other solid wastes for land storage in sealed 55-gal. drums. The uranyl nitrate solutions containing uranium to be recycled is converted to UO_3, which is deposited on the surface of Al_2O_3 carrier particles for packaging and shipment to refabrication facilities. The uranium process loss is typically about 0.25% of the uranium throughput[7].

Non-radiological effluents from a proposed HTGR fuel-reprocessing pilot plant with a capacity of 0.249 Mg of actinides per day are listed in Table 13[2]. Quantities of non-radiological effluents on the flowsheet are derived from these data, scaled according to fuel throughput.

The only liquids released will be cooling water and water from service wastes. The only chemical expected in this liquid waste is some undetermined quantity of nitric acid. All organic liquids are burned at the site or, if they contain appreciable radionuclides, are calcined and stored with solid wastes[2].

Table 13

Gaseous Chemical Releases from HTGR Fuel Reprocessing Pilot Plant[2]

Plant Capacity = 0.249 Mg U + Th per day

	Annual Release cu. ft. (STP)
N_2	2.8×10^8
O_2	7.3×10^7
CO	5.7×10^6
CO_2	6.4×10^7
NO_x	1.7×10^5
H_2 and hydrocarbons	9.0×10^5

	Annual Release lb.
P_2O_5	1.5×10^4

The gaseous fission products ^{85}Kr, $^{129,131}I$, ^{3}H and the remaining stable xenon evolve during the crushing and burning operations of the head-end process. The proposed HTGR fuel reprocessing pilot plant includes a system to recover the krypton and xenon noble gases[1]. In the KALC process these gases are absorbed in cold liquified CO_2 and then stripped and stored in cylinders as compressed gas. Krypton effluents are calculated on the basis of 99% release of krypton in the head-end process and 1% loss of this krypton from the KALC absorption process[7].

Radioiodine is trapped in fuming nitric acid and converted to a dry powder for storage[2]. Environmental releases are calculated on the basis of 1% of all radioiodine in the fuel at the time of reprocessing[7].

The tritium is evolved as tritiated water vapor, which may be condensed and sold for the tritium content or converted to a dry hydrate for storage. Gaseous releases of tritium are calculated on the basis of 1% of all tritium present in the fuel at the time of reprocessing.

The carbon monoxide and carbon dioxide evolved from combustion of the crushed fuel blocks will contain 5730-year ^{14}C, which resulted from neutron absorption in carbon. It is estimated that 96% of this ^{14}C in the fuel blocks will be released to the atmosphere as CO and CO_2, resulting in a yearly release of 297 Ci. This large ^{14}C release is unique to HTGR fuel reprocessing.

10. High Level Wastes

The high level wastes from reprocessing HTGR fuel contain all the fission products, other than tritium, iodine and the noble gases. They also contain all the plutonium present in the fuel and 0.5% of the uranium[2,7]. The fission-product activity at the time of reprocessing is two orders of magnitude lower in the HTGR wastes than in the high-level wastes from a water reactor of the same electrical power rating[1]. This is due to the higher thermal efficiency of the HTGR and the longer preprocessing cooling of its discharge fuel. After several years storage of the separated fission products the effect of the longer preprocessing cooling disappears. The total fission product activity is then closer to that from water reactors. The calculated activity of the fission products in the high level wastes produced in one year of power generation, as a function of storage time, is shown in Figure 6.

Because all plutonium in the HTGR fuel appears in the high-level wastes, the mass of plutonium contained in these wastes is over twelve times greater than in uranium-fueled water-reactor* wastes which have been partitioned from plutonium. The radioactivity of plutonium in the HTGR wastes at the time of reprocessing separation in reprocessing is 27 times greater than in the high-level wastes from the uranium-fueled water reactor.

---

* This comparison refers only to a water reactor operating with slightly enriched uranium fuel and without plutonium recycle. It has been demonstrated that considerably greater quantities of actinides are present in the high-level wastes from water-reactor fuel when plutonium is recycled[21,22].

FIGURE 6

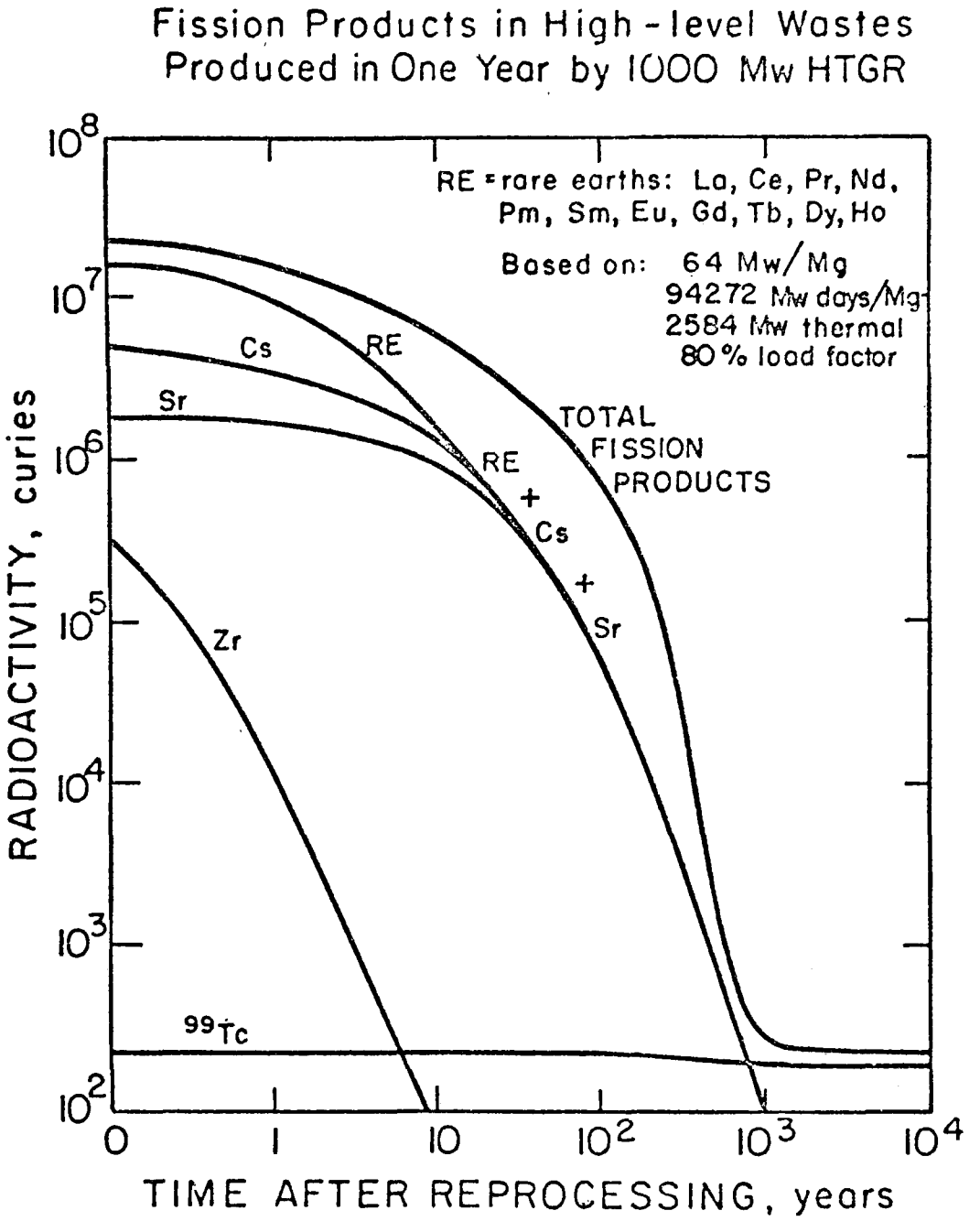
Fission Products in High-level Wastes
Produced in One Year by 1000 Mw HTGR
RE = rare earths: La, Ce, Pr, Nd, Pm, Sm, Eu, Gd, Tb, Dy, Ho
Based on: 64 Mw/Mg
94272 Mw days/Mg
2584 Mw thermal
80% load factor
TOTAL FISSION PRODUCTS
RE + Cs + Sr
RE
Cs
Sr
Zr
99Tc
RADIOACTIVITY, curies
TIME AFTER REPROCESSING, years
10^8
10^7
10^6
10^5
10^4
10^3
10^2
0
1
10
10^2
10^3
10^4

The actinide content of these high-level wastes is important because, as in the case of the high-level wastes from water reactors, actinides dominate the total waste activity after storage periods of a few hundred years. However, the long-term storage problem is no greater for the HTGR, even though the plutonium content is considerably greater at the time the wastes are separated. As shown in Figure 7, the plutonium activity in the HTGR wastes arises mainly from the ^{238}Pu, one of the end products of the chain initiated by neutron capture in ^{235}U. Because of the relatively small quantities of ^{238}U in HTGR fuel, relatively little plutonium of mass 239 and higher is formed, and relatively little americium and curium are formed. However, because of their longer half lives, it is still the ^{239}Pu and ^{240}Pu, present in the discharge fuel and formed later by the decay of americium and curium, as well as 7950-year ^{243}Am, which contribute most significantly to the long-term storage problem of high-level wastes. This is illustrated in Figure 8 which is a plot of the total actinide activity in the high-level wastes as a function of waste storage time. Because of the relatively low content of $^{239,240}Pu$ and ^{243}Am in HTGR fuel, the long-term actinide activity of the HTGR wastes is less than for the uranium-fueled water reactor.

The high-level liquid wastes are converted to solids and stored at the reprocessing facility in air-cooled, stainless steel bins contained in concrete vaults[2]. Storage may continue in this manner for up to 10 years, after which the high-level wastes are to be shipped to a federal repository. The waste volumes and land use are calculated from data in Fuel Cycles - Part I[1]

FIGURE 7

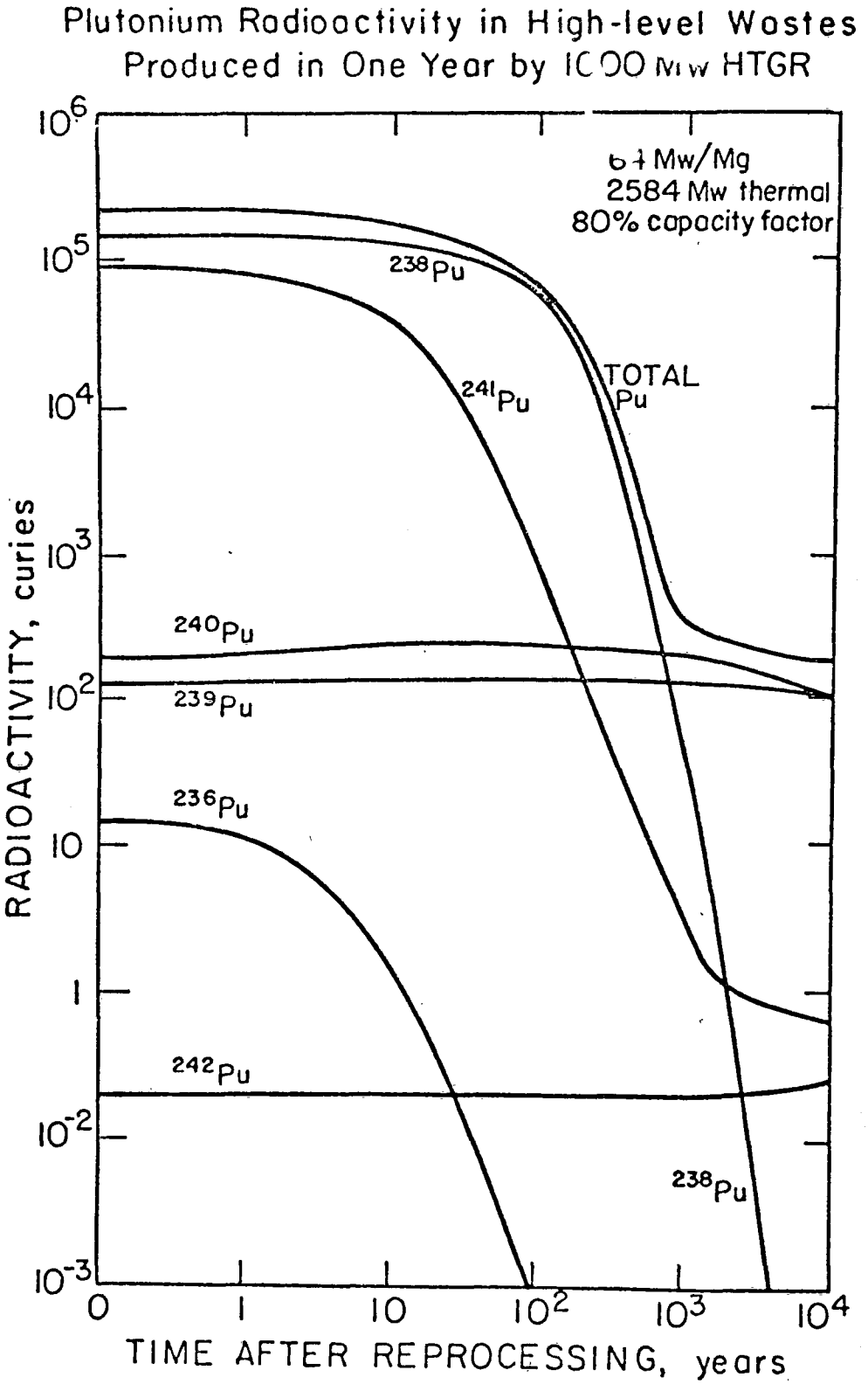
Plutonium Radiooctivity in High-level Wastes
Produced in One Year by 1000 Mw HTGR
64 Mw/Mg
2584 Mw thermal
80% capacity factor
238Pu
241Pu
TOTAL Pu
240Pu
239Pu
236Pu
242Pu
238Pu
RADIOACTIVITY, curies
TIME AFTER REPROCESSING, years

FIGURE 8

Actinide Radioactivity in High-level Wastes
Produced in One Year by 1000 Mw HTGR

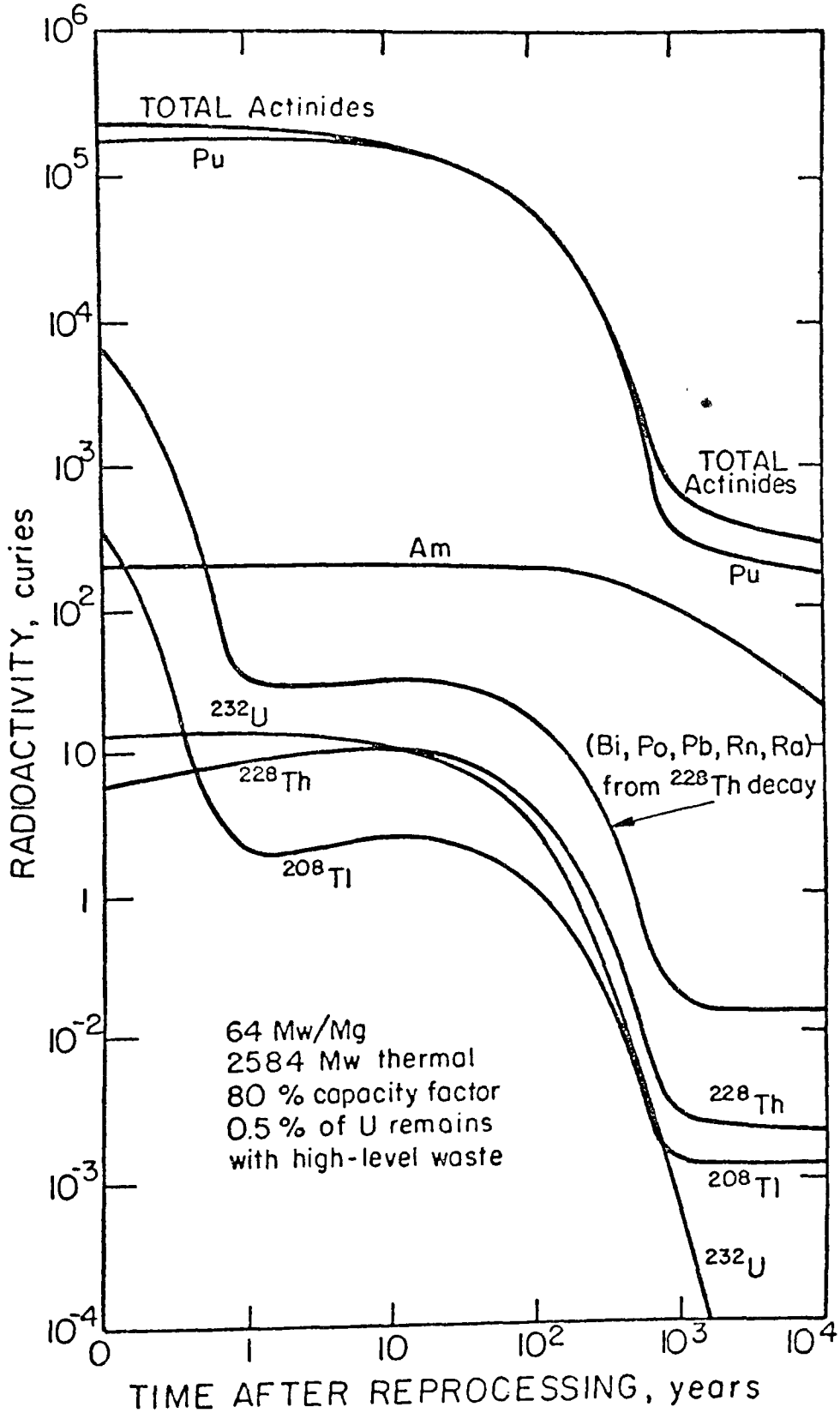

REFERENCES

1. Pigford, T. H., M. J. Keaton, B. J. Mann, and P. M. Cukor and G. L. Sessler, "Fuel Cycles for Electric Power Generation", Teknekron, Inc. Report No. EEED 101, Environmental Protection Agency Contract No. 68-01-0561 (rev. March, 1975).

2. National Reactor Testing Station, Idaho, Environmental Statement, HTGR Fuels Reprocessing Facilities (January, 1974) (WASH-1534).

3. Oak Ridge National Laboratory, National HTGR Fuel Recycle Development Program Plan (August, 1971) (ORNL-4702).

4. Delmarva Power & Light Co. of Wilmington, Delaware, Preliminary Safety Analysis Report and Environmental Report for the Summit Power Station, 1974.

5. Ang, K. P., Doctoral Dissertation in Nuclear Engineering, University of California, 1975.

6. USAEC, D.O.L., Final Environmental Statement Related to Operation of the Highland Uranium Mill, Docket #40-8102 (November, 1973).

7. Oak Ridge National Laboratory, Projections of Radioactive Wastes to be Generated by the U.S. Nuclear Power Industry (February, 1974) (ORNL-TM-3965).

8. Benedict, M., and T. H. Pigford, Nuclear Chemical Engineering, McGraw Hill, New York (1958).

9. Kosiancic, E. J., R. H. Dodd, C. J. Halva, "Direct Preparation of ThO_2-$^{233}UO_2$ Fuel by the Sol-Gel Process," Thorium Fuel Cycle; USAEC, Div. of Tech. Information, 12th Symposium Series, February, 1968.

10. Oak Ridge National Laboratory, Environmental Statement, HTGR Fuel Refabrication Pilot Plant (January, 1974) (WASH-1533).

11. Goodjohn, A. J., Control of Radionuclide Releases from Gas-Cooled Reactors, Conference on Environmental Analysis and Environmental Monitoring for Nuclear Power Generation, University of California, Berkeley, 1974.

12. USAEC, Draft Environmental Statement by Directorate of Licensing Relevant to Proposed Fulton Generating Station, Units 1 and 2, Philadelphia Electric Co., Docket 50-463, 50-464, May, 1974.

13. USAEC, Final Environmental Statement Related to the Proposed Summit Power Station Units 1 and 2, Delmarva Power and Light Company, Docket Nos. 50-450 and 50-451, July, 1974

14. Gulf General Atomic, 40 Mw(e) Prototype High-Temperature Gas-Cooled Reactor Postconstruction Research and Development Program, Quarterly Progress Report for the Period Ending January 31, 1968, USAEC Informal Report GAMD-8500.

15. Turner, R. F., et al, Irradiation Test of the GAIL IIIB Fuel Element in the General Atomic In-Pile Loop, USAEC Report GA-5314, General Dynamics Corporation, General Atomic Division, 1964.

16. Winkler, E. O., et al, Irradiation Test and Post Irradiation Examination of the GAIL IV Fuel Element in the General Atomic In-Pile Loop, USAEC Report GA-7997, General Dynamics Corporation, General Atomic Division, 1967.

17. Vanslager, F. E., G. B. Engle, D. R. Lofing, and C. S. Luby, Final Report on the GA2-284-6F2 Fuel Irradiation Experiment, General Atomic Report GAMD-5925, February 16, 1965.

18. Zumwalt, L. R., P. E. Gethard, and E. E. Anderson, "Fission Product Release from Monogranular UC_2 Particles," Nucl. Sci. Eng., 21, 1-12, 1965.

19. Zumwalt, E. E. Anderson, and P. E. Gethard, Fission Product Release from $(Th,U)C_2$ Graphite Fuels, USAEC Report GA-3599, General Dynamics Corporation, General Atomic Division, 1962.

20. Gulf General Atomic, HTGR Fuel and Fuel Cycle Summary Description, (GA-10233).

21. Pigford, T. H., Radioactivity in Plutonium, Americium and Curium in Nuclear Power Reactors, Report to Ford Foundation Energy Policy Project, June, 1974.

22. Pigford, T. H., R. T. Cantrell, K. P. Ang, Fuel Cycle for Uranium-Plutonium Fueled Water Reactor, Environmental Residuals From Fuel Cycles for Electric Power Generation, Part II, Teknekron, Inc. Report No. EEED-104, Environmental Protection Agency Contract No. 68-01-0561 (March, 1975).

FUEL CYCLE FOR COMBUSTION TURBINE-STEAM TURBINE COMBINED CYCLE POWER PLANT

Peter M. Cukor

Teknekron Report No. EEED 106

March, 1975

ABSTRACT

This study presents an illustrative data base of material quantities and environmental effluents in the fuel cycle for a combustion turbine-steam turbine combined cycle power plant. Data were calculated for a 1000 Mw power plant fueled with either distillate fuel oil or natural gas. Results are shown in tables and on a fuel cycle flowsheet.

TABLE OF CONTENTS

1. Introduction---------- 1

2. Fuels Utilized---------- 9

2.1 Natural Gas Fuel: Extraction, Transmission and Processing - Material and Environmental Releases---------- 9

2.2 Distillate Fuel Oil: Extraction, Transportation and Refining - Material and Environmental Releases---------- 10

3. Power Plant Operation---------- 12

3.1 Air Pollutants---------- 12

3.2 Water Pollutants---------- 12

3.3 Condenser Cooling---------- 14

References---------- 17

LIST OF FIGURES

1. Combined Cycle Generating Unit---------- 3

2. Combustion Turbine – Steam Turbine Combined Cycle Power Plant - 1000 Mw(e)---------- 7

LIST OF TABLES

1. Combined Cycle Power Plant 1000 Mw(e) Environmental Releases Associated with Crude Oil Refining (Te/yr)-------- 11

2. Air Pollutants from Combined Cycle Power Plant - 1000 Mw(e)---------- 13

3. Boiler Blowdown Releases of Liquid Wastes Combined Cycle Power Plant - 1000 Mw(e)---------- 15

4. Cooling Tower Quantities for Combined Cycle Power Plant - 1000 Mw(e)---------- 16

FUEL CYCLE FOR COMBUSTION TURBINE-STEAM TURBINE COMBINED CYCLE POWER PLANT

1. Introduction

The rapid growth of peak electrical loads over the last decade has necessitated the installation of increasing numbers of generating units capable of responding quickly to shifts in power demand. In the majority of cases, utilities have purchased combustion* turbine units to fulfill this requirement. In addition to their excellent load following characteristics, combustion turbines can be quickly started in the event that sudden equipment failures elsewhere in the electric supply system require that emergency power be provided. Because of the relatively short lead times required for installation, utilities faced with unexpected delays in the commissioning of new nuclear and fossil steam units have been forced as a stop-gap measure to install additional combustion turbine capacity in order to maintain system reliability. In these cases, the combustion turbines have frequently been operated as intermediate or base load units rather than as peaking units. Under such conditions, required maintenance increases rapidly thereby increasing total generation costs and decreasing system reliability.

While the capital costs for combustion turbines are considerably lower than those for fossil steam units, the operating costs are considerably higher. The high operating cost is primarily the result of the low efficiency of

---

* Combustion turbines, which may burn a variety of gaseous and liquid fuels, are also frequently referred to as gas turbines.

conversion of thermal energy to electrical energy. While modern fossil steam units may have efficiencies approaching 38 percent, combustion turbines typically have thermal efficiencies in the vicinity of 24 to 27 percent. This low efficiency results from the high temperature, typically 1000°F, at which the exhaust gases exit from the turbine. While the thermal efficiency of a combustion turbine does increase as the firing temperature rises, metallurgical considerations limit the maximum firing temperature of modern combustion turbines to about 2000°F.

The use of a heat recovery boiler to recover part of the thermal energy contained in the combustion turbine exhaust gases greatly increases the efficiency of conversion to electricity of the fuel burned in the turbine. The heat recovery unit is similar to, but somewhat larger than, a conventional boiler. Some units are equipped with supplemental burners which add heat to the combustion turbine exhaust. The superheater and evaporator sections provide superheated steam for the steam turbine generator. An economizer and low-pressure coil heat the feedwater for the steam system.

Since this type of power plant produces electricity both by expansion of combustion gases in a gas turbine and by expansion of steam in a steam turbine, it is called a combined cycle unit. Present generation combined cycle units have thermal efficiencies of about 40 percent. Figure 1 is a diagram of a typical combined cycle generating unit.

FIGURE 1

COMBINED CYCLE GENERATING UNIT

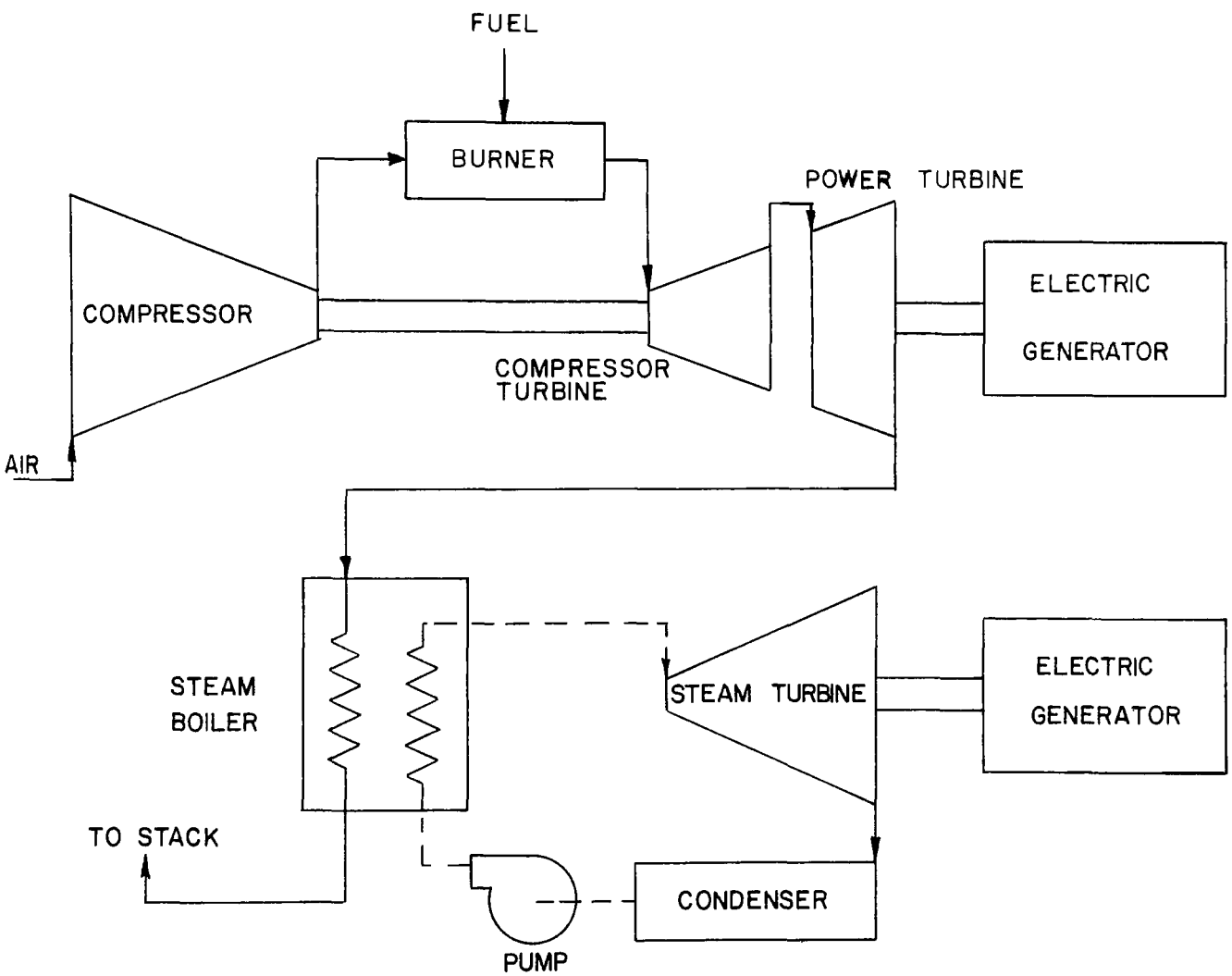

The configuration shown in Figure 1 is only one of a number of possible combined cycles. Other possibilities now being investigated include pressurized boiler furnaces combined with gas turbine jets. In such a system the gas turbine provides the energy to compress combustion air for the furnace. A part of the thermal energy released by fuel combustion in the furnace is converted to steam which is expanded in a steam turbine to produce electricity. The remaining hot gases are expanded in a gas turbine where additional electricity is generated. While this type of configuration promises further increases in thermal efficiency, the only commercially operating combined cycle plants in the United States are of the type described earlier. The following discussion refers solely to this type of unit.

Figure 2 is a material and environmental release flowsheet for a hypothetical 1000 Mw(e) combined cycle power plant. The entries are normalized for operation at 100% of capacity for one year. The largest combined-cycle units now operating have a total generating capacity of about 250 Mw(e). Such a unit consists of three combustion turbines having a total output of about 170 Mw(e) and a heat recovery boiler and steam turbine having an output of about 80 Mw(e). Hence a 1000 Mw(e) combined cycle power plant would be composed of four of these 250 Mw(e) units. Based on a heat rate of 8460 Btu of fuel input per kilowatt hour produced, the average thermal efficiency is 40.3 percent[1]. Refinements in combustion turbine technology will lead to lower heat rates for combined cycle units. By the late 1970's it is expected that newly installed combined cycle plants using distillate oil as fuel will have heat rates of about 8050 Btu per kilowatt hour. This is equivalent to a thermal efficiency of 42.4 percent[2].

FLOW QUANTITIES ARE STATED IN METRIC TONNES / YEAR UNLESS OTHERWISE INDICATED

100% CAPACITY FACTOR

EVAPORATIVE COOLING TOWER FOR WASTE HEAT REJECTION

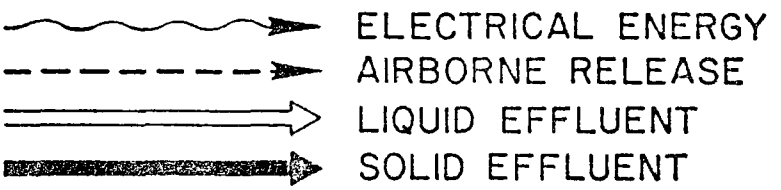

Te = METRIC TONNES
Ci = CURIES
kwh = KILOWATT-HOURS
Mw(e) = MEGAWATTS ELECTRICAL
MPC = MAXIMUM PERMISSABLE CONCENTRATION

Figure 2.

Combustion Turbine – Steam Turbine Combined Cycle Power Plant 1000 Mwe

Material and Environmental Release Flowsheet

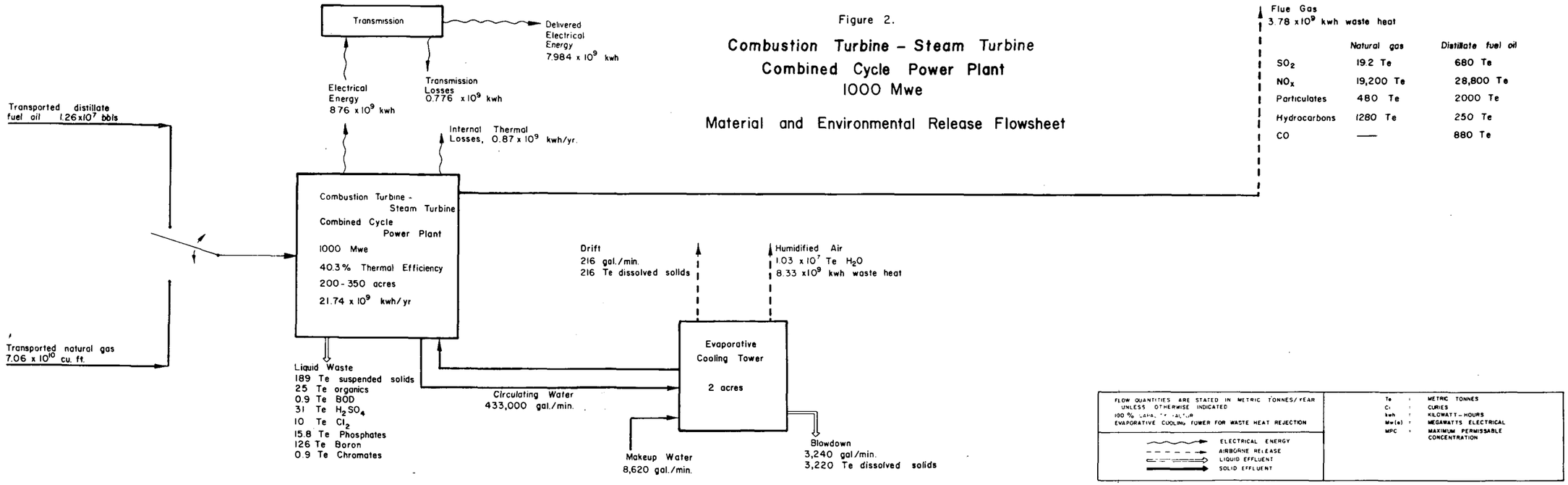

FLOW QUANTITIES ARE STATED IN METRIC TONNES/YEAR UNLESS OTHERWISE INDICATED
100 % [illegible] FOWER FOR WASTE HEAT REJECTION

ELECTRICAL ENERGY
AIRBORNE RELEASE
LIQUID EFFLUENT
SOLID EFFLUENT

Te : METRIC TONNES
Ci : CURIES
kwh : KILOWATT-HOURS
Mw(e) : MEGAWATTS ELECTRICAL
MPC : MAXIMUM PERMISSABLE CONCENTRATION

2. Fuels Utilized

The combined cycle units can be designed to accept a wide variety of fuels including clean power gases made from coal or oil, natural gas, methanol and a range of fuel oils. The fuel oils that can be used range from light distillates all the way to residual. In the case of the heavy fuels, pretreatment is necessary to remove metallic contaminants which may deposit on the turbine blades. Since combined cycle units now operating are designed to burn natural gas or distillate fuel oil, these two fuels have been selected for the present analysis. Based on a thermal efficiency of 40.3 percent and heating values for natural gas and distillate fuel oil of 1050 Btu/ft^3 and 140,000 Btu/gal respectively, the annual fuel requirements for the model 1000 Mw(e) combined cycle power plant operating at 100 percent capacity factor are 7.06 x 10^{10} cubic feet of natural gas or 1.26 x 10^7 barrels of distillate fuel oil.

2.1 Natural Gas Fuel: Extraction, Transmission and Processing - Material and Environmental Releases

The annual material and environmental releases due to extraction, transmission and processing of the natural gas consumed in the model 1000 Mw(e) combined cycle power plant are simply the values presented in Chapter 5 of "Fuel Cycles for Electric Power Generation"[3] multiplied by the ratio of the thermal efficiencies of the conventional steam and combined cycle power plants: 38/40.3 = 0.94.

2.2 Distillate Fuel Oil: Extraction, Transportation and Refining - Material and Environmental Releases

The material and environmental releases due to the extraction, transportation and refining of the petroleum required for the production of the annual volume of distillate fuel oil consumed in the reference combined cycle power plant were calculated using the data presented in Chapter 4 of "Fuel Cycles for Electric Power Generation"[3] as a basis.

Because of the average yield of distillate fuel oil from domestic refineries is 21.7 percent, while the average yield for resid is only 6.8 percent, the required crude oil throughput is much lower than that calculated previously[3]. The actual volume of crude required is equal to the annual fuel consumption of the model combined cycle power plant (corrected for transportation losses) divided by the refinery yield of distillate fuel oil. Assuming that the distillate fuel is shipped to the power plant by pipeline and that 0.04% of the fuel is lost due to spills, the annual volume of crude which must be processed is 5.83×10^7 barrels per year or nearly 160,000 barrels per day. This is a typical size for a modern refinery. Releases of air and water pollutants and solid wastes from the refinery were calculated using the data in reference (3) as a base point and scaling the quantities by the factor 160,000/500,000 = 0.32. These quantities are summarized in Table 1. Releases resulting from crude oil extraction and transporation are simply the values presented in reference (3) multiplied by the same scale factor, 0.32.

Table 1

Combined Cycle Power Plant 1000 Mw(e) Environmental Releases Associated with Crude Oil Refining (Te/yr)

Air Pollutants

Particulates	900
SO_2	6700
Organics	7400
NO_x	5800
CO	1400
Ammonia	700

Water Pollutants

4.5×10^8 Te waste water containing:

Phenol	1
Chlorides	7700
Chromium	2
Lead	1
Zinc	2
Copper	2
Grease	190
Ammonia Nitrogen	190
Phosphates	1
BOD	320
COD	1900
Suspended Solids	640
Dissolved Solids	32000

3.0 Power Plant Operation

3.1 Air Pollutants

Assuming that no fuel is burned in the heat recovery boiler, releases of air pollutants from the reference combined cycle power plant occur due to the burning of fuel in the combustion turbine. Further, since all gases from the combustion turbine stage pass through the heat recovery boiler and are subsequently discharged through the smokestack, the annual release of air pollutants is the same as that for a conventional combustion turbine of equivalent size. Based upon combustion turbine emission factors compiled in reference (4), annual releases of air pollutants were calculated. Additional data for releases of carbon monoxide and organic materials were obtained from reference (1). The results are shown in Table 2 and in the flowsheet.

3.2 Water Pollutants

Combustion turbines are air cooled. Hence no liquid wastes are released because cooling system blowdown is not necessary.

However, blowdown of the heat recovery boiler is a source of liquid wastes. The blowdown contains chemicals added for control of boiler organic growth as well as corrosion. The release rates for the various pollutants in liquid wastes were obtained by scaling on the basis of the steam rates for the reference combined cycle plant and a conventional 1000 Mw(e) coal-fired

Table 2

Air Pollutants from Combined Cycle Power Plant - 1000 Mw(e)

Fuel	Emission factor lb/10^6 ft^3 (Natural gas)	Effluents Te/yr
Natural Gas:		
Particulates	—	480
NO_X	600	19200
SO_X	0.6	19.2
Hydrocarbons	—	1280
Distillate Fuel Oil:		
Particulates	8.4	2000
NO_X	120	28800
SO_X	1425	680
Hydrocarbons	—	250

plant[5]. On the basis of a steam rate of 10^6 lbs/hr for a 400 Mw(e) combined cycle plant[6], the reference plant would have a steam rate of 2.5×10^6 lbs/hr. This is approximately 38% of the steam rate for a conventional 1000 Mw(e) coal-fired plant. The resulting release rates for pollutant contained in the boiler blowdown for the model combined cycle plant are presented in Table 3.

3.3 Condenser Cooling

It is assumed that the condenser cooling for the steam cycle phase of the 1000 Mw(e) combined cycle power plant is provided entirely by evaporative cooling towers. The characteristics of the towers are scaled on the basis of the circulating water rate (see Chapter 6 of reference(3)) and are summarized in Table 4.*

In the present example, the circulating water rate was calculated on the basis of data presented for a 472 Mw(e) combined cycle plant having a change in temperature of 20°F across the condenser and an overall thermal efficiency of 38.6%[7]. For this smaller plant the circulating water rate was stated to be 160,000 gal/min. Scaling to 1000 Mw(e) and correcting for the differences in condenser temperature rise and thermal efficiencies yields a circulating water rate of 433,000 gal/min for the present example. The flowsheet entries (also shown in Table 4) were calculated on the basis of

* A 15°F temperature rise across the condenser has been assumed.

data for cooling tower releases presented in reference (3) adjusted by the ratio of the circulating water rates for the 1000 Mw(e) combined cycle and 1000 Mw(e) coal-fired power plants.

Table 3

Boiler Blowdown Releases of Liquid Wastes
Combined Cycle Power Plant - 1000 Mw(e)

Component	Releases[8] lb/day	Releases Te/yr
Suspended solids	380	189
Non-degradable organics	152	25
BOD	6	0.9
Acids	190	31
Alkalinity	24	3.9
Chlorine	61	10
Phosphates	95	15.8
Boron	760	126
Chromates	5.7	0.9

Table 4

Cooling Tower Quantities for Combined Cycle Power Plant - 1000 Mw(e)

Thermal load	8.35×10^9 kwh/yr
Circulating coolant	433,000 gal/min
Blowdown discharge rate	3240 gal/min
Dissolved solids released in blowdown	3220 Te/yr
Make-up water rate	8620 gal/min
Drift rate	216 gal/min
Dissolved solids released in drift	216 Te/yr
Evaporated water	1.03×10^7 Te/yr

REFERENCES

1. Private communication; Warren Davis, General Electric Company; San Francisco; June, 1974.

2. Private communication; John Gerrity; Gas Turbine Products Division; General Electric Company; Schenectady, New York; December, 1974.

3. Pigford, T. H., M. J. Keaton, B. J. Mann, and P. M. Cukor and G. L. Sessler, "Fuel Cycles for Electric Power Generation", Teknekron Report No. EEED 101, EPA Contract No. 68-01-0561, rev. March, 1975.

4. Compilation of Air Pollutant Emission Factors; United States Environmental Protection Agency; 2nd Edition, April, 1973.

5. "Steam Generation - a Power Special Report;" McGraw Hill; June, 1964.

6. Private communication; Gary Squires; General Electric Company; San Francisco; August, 1974.

7. "Draft Environmental Impact Report - Coolwater Combined Cycle Units 3 and 4;" Southern California Edison Company; submitted to California Public Utilities Commission; June 8, 1973.

8. Aynsley, E. and M. R. Jackson; "Industrial Waste Studies: Steam Generating Plants;" United States Environmental Protection Agency, Water Quality Office; 1971.

TECHNICAL REPORT DATA
(Please read Instructions on the reverse before completing)

1. REPORT NO.	2.	3. RECIPIENT'S ACCESSION NO.
EPA-600/9-78-013		

4. TITLE AND SUBTITLE
Comprehensive Standards: The Power Generation Case

5. REPORT DATE
June 1978 issuing date

6. PERFORMING ORGANIZATION CODE

7. AUTHOR(S)
K.P. Ang* Peter M. Cukor Thomas H. Pigford*
Robert T. Cantrell,* Michael J. Keaton, Bruce J. Mann**

8. PERFORMING ORGANIZATION REPORT NO.

9. PERFORMING ORGANIZATION NAME AND ADDRESS
Energy and Environmental Engineering Division
Teknekron, Inc.
2118 Milvia St.
Berkeley, Ca. 94704

10. PROGRAM ELEMENT NO.
1HA091

11. CONTRACT/GRANT NO.
68-01-0561

12. SPONSORING AGENCY NAME AND ADDRESS
Office of Research and Development
U.S. Environmental Protection Agency
401 M St. SW
Washington, DC 20460

13. TYPE OF REPORT AND PERIOD COVERED
Criteria Document

14. SPONSORING AGENCY CODE

15. SUPPLEMENTARY NOTES
* = Dep't of Nuclear Engineering, University of California, Berkeley, Ca.
** = Office of Radiation Programs, U.S. EPA, Las Vegas, Nevada

16. ABSTRACT

This study presents an illustrative data base of material quantities and environmental effluents in the fuel cycles for alternative technologies of thermally generated power. The entire fuel cycle for each of the alternative ten technologies is outlined for a representative power plant generating 1000 Mw of electrical power. The required utilization of material resources and the fuel-cycle material quantities are indicated on a flow sheet for each technology. The technologies considered are: 1) Light Water Nuclear Reactor; 2) Coal: Appalachian Bituminous and Northwestern Sub-bituminous; 3) Residual fuel oil; 4)Natural Gas; 5) High Sulfur Coal, with Coal Gasification and Sulfur Removal; 6) High Sulfur Coal, with SO_2 recovery by Wet-Limestone Scrubbing; 7) Geothermal Steam; 8) Breeder Fission Reactor; 9) Solar Energy; and 10) Thermonuclear Fusion.

17. KEY WORDS AND DOCUMENT ANALYSIS

a. DESCRIPTORS	b. IDENTIFIERS/OPEN ENDED TERMS	c. COSATI Field/Group
Coal Gasification Geothermal Power Generation Nuclear Power Generation Solar Power Generation Thermonuclear Power Generation Electric Power Generation	Alternative Energy Technologies, Futre Energy Technologies, "Hard Path" Energy Technologies	

18. DISTRIBUTION STATEMENT	19. SECURITY CLASS *(This Report)*	21. NO. OF PAGES
Release Unlimited	Unclassified	
	20. SECURITY CLASS *(This page)*	22. PRICE
	Unclassified	

EPA Form 2220-1 (9-73)

☆U.S. GOVERNMENT PRINTING OFFICE: 1978 O— 720-335/6137 REGION 3-1