EPA-R2-73-145
MARCH 1973

Environmental Protection Technology Series

A Thermal Wave Flowmeter for Measuring Combined Sewer Flows

Office of Research and Monitoring
U.S. Environmental Protection Agency
Washington, D.C. 20460

RESEARCH REPORTING SERIES

Research reports of the Office of Research and Monitoring, Environmental Protection Agency, have been grouped into five series. These five broad categories were established to facilitate further development and application of environmental technology. Elimination of traditional grouping was consciously planned to foster technology transfer and a maximum interface in related fields. The five series are:

1. Environmental Health Effects Research
2. Environmental Protection Technology
3. Ecological Research
4. Environmental Monitoring
5. Socioeconomic Environmental Studies

This report has been assigned to the ENVIRONMENTAL PROTECTION TECHNOLOGY series. This series describes research performed to develop and demonstrate instrumentation, equipment and methodology to repair or prevent environmental degradation from point and non-point sources of pollution. This work provides the new or improved technology required for the control and treatment of pollution sources to meet environmental quality standards.

EPA-R2-73-145
March 1973

A THERMAL WAVE FLOWMETER FOR MEASURING COMBINED SEWER FLOWS

By

Paul W. Eshleman and Robert A. Blase

Project 11020 EYD

Project Officer

Harry C. Torno
Office of Research and Monitoring
Environmental Protection Agency
Washington, D. C. 20460

Prepared for

OFFICE OF RESEARCH AND MONITORING
U. S. ENVIRONMENTAL PROTECTION AGENCY
WASHINGTON, D. C. 20460

For sale by the Superintendent of Documents, U.S. Government Printing Office, Washington, D.C. 20402
Price $1.25 domestic postpaid or $1.00 GPO Bookstore

EPA Review Notice

This report has been reviewed by the Environmental Protection Agency, and approved for publication. Approval does not signify that the contents necessarily reflect the views and policies of the Environmental Protection Agency, nor does mention of trade names or commercial products constitute endorsement or recommendation for use.

ABSTRACT

A study of the application of thermal techniques to the measurement of flow rates in combined sewers has been conducted. The utilization of flush-mounted hot wire or hot film anemometers in a direct reading mode was extensively investigated. It was concluded that such a direct reading application was not feasible due to shifts in calibration caused by the build-up of contamination and the lack of commercially available units with sufficient ruggedness and reliability for application in a combined sewer pipe.

A particular technique, which is based upon measuring the time-of-flight of thermal pulses generated at various positions around the periphery of the pipe, was investigated in depth. A full scale prototype unit using five thermal wave sensors distributed around one-half of the circumference of the pipe was fabricated and tested. These tests indicated that the present configuration does not provide signals which have adequate precision to enable this unit to measure the fluid flow with the desired accuracy.

This report is submitted in partial fulfillment of Contract No. 14-12-911 under the sponsorship of the United States Environmental Protection Agency.

CONTENTS

Section		Page
I	Conclusions	1
II	Recommendations	3
III	Introduction	5
IV	Literature Search Results on Hot Film Anemometry	7
V	Thermal Wave Flowmeter Design Concept	21
VI	Hydraulic Considerations	25
VII	Results of Preliminary Laboratory Experiments Utilizing Thermal Wave Flowmeter	29
VIII	Detailed Prototype Design	45
IX	Preliminary Flowmeter Calibration	51
X	Full Scale Test Site Selection	59
XI	Full Scale Flowmeter Calibration	63
XII	Acknowledgements	65
XIII	References	67
XIV	Appendices	
	A List of Vendors	81
	B Design Drawing List	83
	C Strut Flowmeter Test at NSRDC	85
	D Flowmeter Test at National Bureau of Standards	95

FIGURES

Figure		Page
1	Commercial configurations of hot wire and hot film anemometers	9
2	Schematic of constant current system	10
3	Schematic of constant temperature system	12
4	General sensor configuration	22
5	Model test sensor block	30
6	Model test hydraulic apparatus	32
7	Experimental instrumentation for model flow tests	33
8	Thermal wave velocity versus mean velocity for the sensor block on the side of a 1-inch I. D. pipe	35
9	Thermal wave velocity versus mean velocity for the sensor block on bottom of 1-inch I. D. pipe	36
10	Thermal wave velocity versus mean velocity for sensor block on top of 1-inch I. D. pipe	37
11	Thermal wave velocity versus mean velocity for sensor block on side of 2-inches I. D. pipe	38
12	Thermal wave velocity versus mean velocity for sensor block on bottom of 2-inches I. D. pipe	39
13	Thermal wave velocity versus mean velocity for sensor block on side of 2-inches I. D. pipe with wedge	40
14	Thermal wave velocity versus mean velocity for sensor block on side of 1-inch pipe with wedge	41
15	Thermal wave velocity versus mean velocity for all configurations	42

Figure		Page
16	Full scale sensor block in cross-section	46
17	Proposed sewer pipe installation of flow measurement system	47
18	Calibration data	54
19	Electrical calibration data	55
20	NSRDC calibration data (sensor #2)	92
21	Electrical calibration (actual time delay versus reading of the instrument)	100

TABLES

Table		Page
1	Instrument electrical calibration	53
2	Scott's Run hydraulic characteristics	61

SECTION I

CONCLUSIONS

1. A study of the application of thermal techniques to the measurement of flow rates in combined sewers has been conducted, and it is concluded that extending the application of hot-film anemometry techniques from fluid mechanics research to a commercial application of measuring contaminated sewer effluent for extended periods of time does not appear feasible. The major reasons are:

   a. the change in calibration that occurs due to contamination film build-up;
   b. the breakdown of protective coatings over long periods of time; and
   c. the change in calibration that occurs due to dissolved gases coming out of solution and depositing on the film element as bubbles.

2. A particular technique incorporating a heat source and sensor located a known distance apart which can measure the time of flight of a thermal pulse has been indicated feasible in scale model laboratory tests.

3. A prototype configuration for a full scale demonstration model was developed. It contained features to minimize sensitivity and data scattering problems observed during early scale model laboratory experiments. The full scale tests have indicated these problems to be greater than noted in the model tests.

4. A calibration of the prototype unit has been attempted and has demonstrated the capability of this unit to indicate flow rates. However, the calibration data indicate that certain flow factors affect the instrument's performance to such an extent that the desired accuracy cannot be achieved with the unit in its present configuration.

SECTION II
RECOMMENDATIONS

An investigation of a flowmeter concept based upon the monitoring of the flow in the boundary layer has been concluded. This concept of a non-invasive flowmeter was based upon the measurement of the time of flight of a thermal pulse. The preliminary calibrations which were conducted indicated that the accurate measurement of fluid flow by the non-intrusive means of injecting a small thermal pulse into the fluid at its boundary layer is not presently feasible. The dissipation of heat was determined to be quite large, as was the ratio of the average stream velocity to the apparent boundary layer velocity. Future examinations of non-invasive thermal flowmeters must deal with the problems of adequate boundary layer penetration, minimal thermal lag, and adequate protective coating over the heater element. In addition, power densities in excess of the 300 watts/square inch (instantaneous value) utilized in this approach must be examined.

SECTION III
INTRODUCTION

This is a final report submitted to the Environmental Protection Agency and contains the results of work conducted under Contract No. 14-12-911. The objective of the contract was to demonstrate the feasibility of a thermal wave flow measuring device to provide for the continuous measurement and recording of flows in existing storm and combined sewers without disrupting the capabilities of the sewer. Phase I of the contract consisted of a literature search, feasibility study, and a proposed full scale design of the flow measuring system. Phase II consisted of fabrication and preliminary testing of elements of the full scale prototype, and Phase III consisted of full scale testing and evaluation of prototype feasibility.

The proposed flow measurement system had a design goal of measuring the volume flow rate in the sewer within five percent of its actual value over the flow range. The volume flow rate is computed by making two measurements:

1. The average flow velocity in the pipe, and
2. Area of flow as determined from a stage measurement.

The design range for measuring the average flow velocity encompassed a stage/diameter ratio of 0.067 through pressurized full channel flow. The stage measurement capability ranges from stage/diameter ratios from zero to one with continuous readout capability in between. Reliable operation for a life of at least one year was desired. Data readout into a simple low-cost recorder with the information in a form suitable for data processing was also provided. Minimum protrusion into the flow was a design requirement and no sharp edges or snaggable protrusions were permitted.

The original proposed concept of operation was to utilize a series of flush mounted hot-film anemometers configured along the wall of the sewer pipe. The forced convective heat transfer from the anemometers would then be a measure of the average velocity in the pipe. After studying the results of the literature search and conversations with researchers and vendors, it was concluded that the originally proposed hot-film measuring system could not maintain a constant calibration due to contamination inherent in the sewer environment.

A new concept which relied on the correlation of the velocity of a heat wave generated at the periphery of the pipe to the average velocity was then studied and the concept was experimentally validated in a 1-inch and 2-inch I. D. pipe. A detail design of the flow measurement system utilizing the thermal wave concept was then completed and a prototype device was fabricated and tested.

SECTION IV
LITERATURE SEARCH RESULTS
ON
HOT FILM ANEMOMETRY

The literature search was conducted with the intent of obtaining the latest information on the development, manufacturing techniques, past applications, and experimental data on the use of hot-film anemometry for velocity and flow measurement of liquids. The literature search was composed of the following areas

1. Personal Contact
   a. Vendor Companies
   b. Researchers
2. Vendor Catalogs and Publications
3. Technical Reports
4. Symposium and Conference Reports
5. Thesis Publications
6. Textbooks

A detailed listing of the research literature is contained in Section XI and references in the text are numbered in conjunction with the listing contained in Section XI. The following section is separated into (1) Theoretical Principles of Anemometry; (2) Survey of Past Applications of Anemometry; (3) Survey of Vendors; (4) Survey of Technical Discussions; and (5) Conclusions.

THEORETICAL PRINCIPLES OF ANEMOMETRY

When an electrically heated wire or film is placed in a flowing fluid, heat will be transferred between the two, depending on a number of factors, including the flow rate. This type of flow sensing element

is called a hot-wire or hot-film anemometer. Typical commercial configurations of these are depicted in Figure 1.

The cooling of the film is a function of the velocity of the flow; temperature, density, viscosity, and thermal conductivity of the fluid; temperature, diameter, and length of the film backing material; and thickness of the film. If all but one of the fluid flow and film variables are kept constant, the heated film is a transducer for measuring the remaining variable. For variable fluid properties, as would be experienced in sewer effluent, the problem of constant calibration would be nearly impossible.

The convective heat transfer from a cylinder has had extensive theoretical and experimental study. The potential flow solution is attributed to King. The King's law relation may be expressed as:

$$\frac{I^2 R_w}{R_w - R_a} = A + B\sqrt{U} \qquad (1)$$

in which:

I = electric current

R_w = electrical resistance of wire at wire temperature

R_a = electrical resistance of wire at fluid temperature

A, B = coefficients

U = velocity of flow

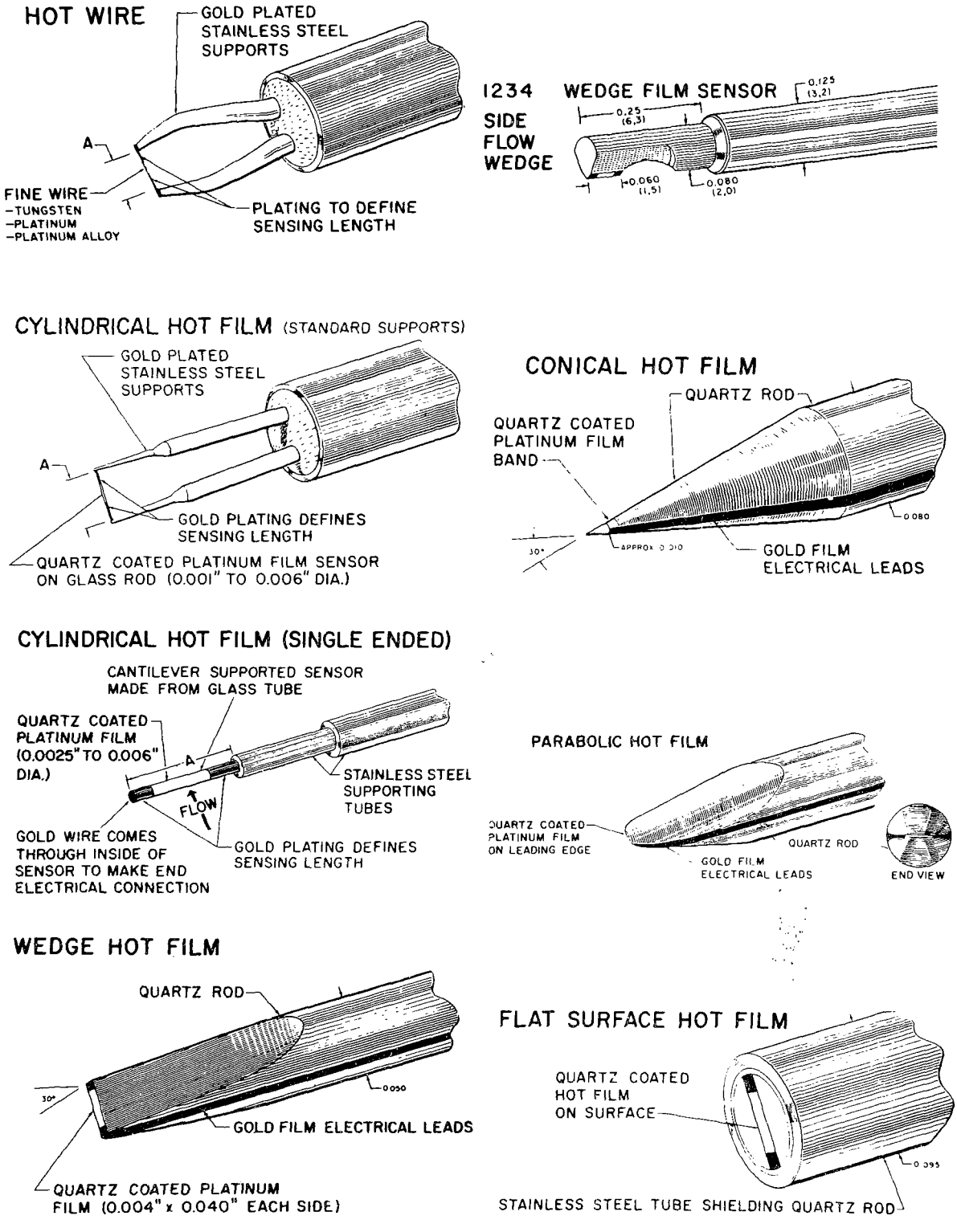

Figure 1. Commercial Configurations of Hot Wire and Hot Film Anemometers.

It has been found that, at best, King's law only holds for continuum flow at large Reynolds numbers. For continuum incompressible flow, the best experimental relation between mean heat loss and mean velocity is

$$\frac{I^2 R_w}{R_w(R_w - R_a)} = A + BU^n \tag{2}$$

This relation is similar to King's; however, n is a function of the fluid medium, overheat ratio, sensor, and mean velocity. Again, calibration accuracy can only be maintained in closely controlled experiments.

Two methods are employed to measure flow. The first technique employs a constant current passing through the sensing wire. Variation in flow results in changed wire temperature; hence, changed resistance, which thereby becomes a measure of flow. The electrical schematic of a constant current system is shown in Figure 2.

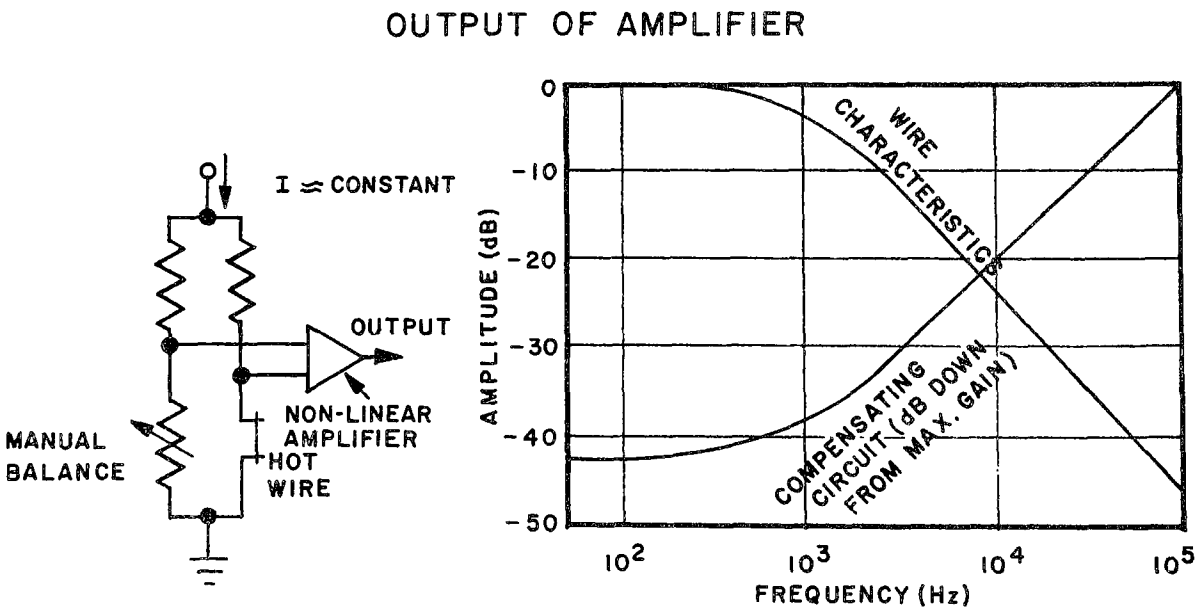

Figure 2. Schematic of Constant Current System.

The current to the sensor is maintained essentially constant by using a large resistor in series with the sensor. The current is selected so the sensor is operated at the desired temperature in the environment of interest. If the heat transfer between the environment and the sensor increases (due, for example, to an increase in velocity) the sensor will tend to cool with a resulting decrease in its resistance. The major drawback of the constant current system is that the frequency response of a sensor depends not only on sensor characteristics, but also on flow characteristics. The response depends on both the thermal capacity of the sensor and the heat transfer coefficient between the sensor and its environment. Since the sensor response changes with changes in flow (changing the heat transfer coefficient), the frequency compensation of the amplifier must be readjusted whenever the mean flow changes. This is not practical for the sewer flow application.

The constant temperature type of compensating circuitry overcomes the primary disadvantage just mentioned in the constant current system by using a feedback loop. Figure 3 depicts a constant temperature system. As the velocity past the sensor increases, the sensor will tend to cool with a resulting decrease in the resistance. This resistance decrease will cause the voltage to decrease; thus, changing the input to the amplifier. The phase of the amplifier is such that this decrease in voltage will cause an increase in the output of the amplifier in order to increase the current through the sensor. The output of the constant temperature system is the voltage output of the amplifier which in turn is the voltage required to drive the necessary current through the sensor. Due to the feedback action, the resistances in the bridge remain constant. The voltage across the bridge is directly proportional to the current through the sensor and power is equal to the current squared times

the resistance. Therefore, the square of the voltage measured on top of the bridge is directly proportional to the instantaneous heat transfer between the sensor and its environment.

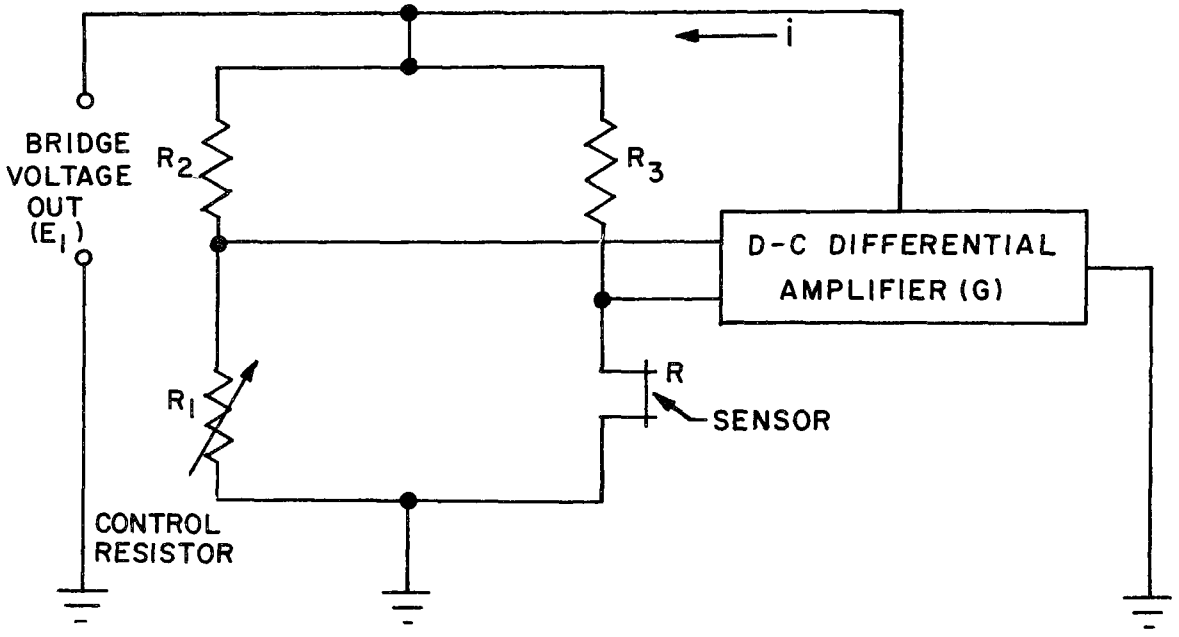

Figure 3. Schematic of Constant Temperature System.

There are special considerations for hot-film sensors used in liquids which greatly limit their application:

Contamination -The characteristics of combined sewer waste-water will cause prohibitive contamination on the hot-film sensor that would drastically change the heat transfer capability of the film. In turn, measured voltages would be unstable for a given flow velocity and be inapplicable in terms of comparison to a

previous calibration. Oils, greases, and soaps contained in sewer wastewater would be most detrimental to achieving stable measurements. They tend to coat the wetted surfaces of the sewer pipe by congealing, and in doing so on the sensor film, would cause a change in the heat transfer characteristics of the film. Dissolved gases in the wastewater such as carbon dioxide, if near saturation levels, will be driven out of solution by the heated sensor since saturation levels decrease with increasing temperature. Bubbles, thus formed will cling to the sensor surface and cause erratic heat transfer. Water is the major component of the sewer effluent and will undergo electrolysis unless the hot film is completely insulated from the water. Electrolysis forms gas bubbles and drives dissolved minerals out of solution to deposit on the sensing elements. The grit content in the combined sewer wastewater will greatly accelerate the breakdown of the film insulation. The grit content is greatly increased during storm runoff and therefore excessive wear would be expected.

Temperature Changes - Since the operating temperature of a sensor in liquids is limited to the boiling point and more practically, to an increase over the fluid temperature of 50 to 100°F, small temperature changes can provide significant errors with constant temperature anemometer operation. For example a 5°F change with an overheat of 50°F gives about a 10 percent change in output. In gases where sensor temperature is typically 400-500°F above the fluid temperature, small temperature changes are not so significant. Hence, in liquids some method of temperature compensation is important. There are means of achieving this but at added cost and reduced reliability.

SURVEY OF PAST APPLICATIONS OF HOT-FILM ANEMOMETRY IN WATER

Ling (55) introduced the hot-film probe for use in liquid flows in 1956. Since then a number of investigations have been carried out in liquids with only a few being successful. In most of these, the film was placed away from the wall since its size can interfere with the detailed measurements required in the sub-layer region (43) and (53). Indeed, different configurations of film probes have produced very different results within the same experiment even for the simple case of measuring velocity profiles in turbulent flows (44) and (22).

The one type of film probe that holds promise of being applied to sewer flow is the flush mounted probe because the backing material does not interfere with the flow field and has the best chances of physical survival in the sewer environment. Very little research has been done to determine the feasibility of using flush mounted, hot-film sensors for quantitative measurements in water because the electrolysis problem has only recently been solved through the use of quartz coatings. Townsin (45) demonstrated the use of the flush mounted hot-film sensor to detect laminar, transition, and turbulent flow fields along the hull of a ship model. Similarly, Burns and Murphy (46) used the same type of probe to investigate the effectiveness of turbulence stimulation on ship models. Rundstadler (30) used them for studies of the viscous sublayer. An attempt to calibrate them for shear stress measurements was unsuccessful, however, because of the low velocity and electronic drift problems.

Hot-film sensors have also been used for quantitative turbulence measurements. Dreyer (22) and Fabula (32) have also explored this area using conical and parabolic hot-film probes. Geremia (26)

studied the flush mounted hot-film anemometer as a possible tool in turbulence research and found it to be a powerful measuring device.

Mies (27) studied the most effective way of curve fitting hot-film measurements made in an open channel for purposes of calibration. Richardson and McQuivey (36) describe a method for measuring turbulence in water which does not depend on filtering and the removal of gases from the water. The method is based on the discovery that the change in the voltage/velocity relation by contamination of the probe is the same as the change which occurs for an uncontaminated probe when the overheat ratio is decreased.

Resch (38) made measurements of the relative intensity of turbulence and energy spectra using a conical probe at the axis of a cylindrical pipe. The results of these measurements were compared with those of other researchers in air and in dynamically similar flows. The comparison shows that measurements of turbulence can be carried out in water with a comparable degree of accuracy to those carried out in air. Almost every investigator was concerned with contamination and took careful measures to filter or otherwise reduce the effects of this problem.

Runstadler (30) gives a very concise summary of the factors that significantly affect the stable non-drift operation of hot-film probes in water.

Dirt Contamination - Lint, dirt particles, and even particles microscopic in size can collect on the probe or sensing element causing a change in the heat transfer characteristics between the probe and the fluid.

Dissolved Gases - Air or other gases in saturation in the water may come out of solution and collect on the probe or sensing element, causing a change in the heat transfer characteristics between probe

and fluid. This factor is enhanced when the probe is operated at large overheats.

Chemical Impurities - Chemical impurities in the water such as chlorine or similar halogens, may produce a chemical reaction with the film sensing element, and cause eroding of the metal film thus producing a change in the electrical resistance and heat transfer characteristics. In addition, hard water forms deposits on the probe element that alter the heat transfer characteristics between the probe and fluid.

Water Electrical Conductivity - A high electrical conductivity caused by impure water can lead to a low parallel resistance path through the water relative to the resistance of the film, thus producing an effective change in the resistance of the sensing element. An important consideration in this regard is to minimize the leakage current which can occur by using a thin protective coating. This has the adverse affect of reducing sensitivity but is a necessity for prolonged operation. As yet, reliability has not been achieved in coatings for prolonged operation.

Stray Electric or Magnetic Fields - Stray electric or magnetic fields (stray electric fields frequently occur in water channel flows) may have an affect on the stable operation of probes. At present, little is known about this factor.

Nucleate Boiling - The probe must be operated at sufficiently low values of overheat such that formation of water vapor caused by nucleate boiling does not occur on the sensing element.

A number of factors pertaining to the construction and operation of the probes are also important through their affects on the factors described in the preceding.

Probe Shape - The shape of the probe can be important by providing a probe form that is less susceptible to collecting dirt and more readily sheds gas or vapor bubbles.

Electrode Surface Area - The surface area of the electrode should be kept small and the location of the electrode on the probe should provide the longest possible conduction path for leakage current flow.

Shielding of Electrodes - As previously mentioned, one way of preventing electrolysis is by coating the electrode. Experience has shown however, that electrolysis may occur under the coating, producing gas bubbles which can lead to an early breakdown of the electrode material and coating.

Electrode Material - Experience has also shown that platinum sponge material sometimes has a tendency to break down and decompose after long use in water. The effect is to produce an increase in the electrical resistance of the probe. Other materials used for films are Tungsten, Nichol, and an alloy of Platinum (80%) and Iridium (20%).

In almost every report that was reviewed some mention of probe contamination was made. Careful filtering and deaerating techniques were developed to have a test fluid that would not contaminate the measuring probe and thus cause a calibration shift. Needless to say, investigation of other means of measuring velocity in the sewer was begun when it became apparent that contamination was such a severe limitation.

SURVEY OF VENDORS OF HOT-FILM ANEMOMETERS

A list of all vendors contacted during the study (see Appendix A) revealed that only three were actively in the business of manufacturing hot-film and hot-wire anemometers and are:

DISA Electronics
779 Susquehanna Avenue
Franklin Lakes, New Jersey 07417
201-891-9460

Thermo-Systems, Inc. (TSI)
2500 Cleveland Avenue, North
Saint Paul, Minnesota 55113

CGS/Datametrics
127 Coolidge Hill Road
Watertown, Massachusetts 02172
617-924-8505

These companies were personally visited and interviewed with the intent of establishing the level of expertise and facilities dedicated to this field and to obtain literature and personal opinions toward the application of hot-film sensor for measuring sewer flow. The results of these meetings are contained in the next section.

Of these three companies, DISA and TSI are rated about equal in expertise and facilities. CGS did not appear to be as actively engaged in this field as the other two companies. TSI has all of its facilities located in one location whereas DISA has manufacturing and assembly plants in Herlev, Denmark, with sales and marketing located in New Jersey. Impressions made from conversations with anemometer users and the literature survey indicate that both TSI and DISA manufacture good quality equipment.

SURVEY OF TECHNICAL DISCUSSIONS

In order to obtain first-hand knowledge of the manufacturing techniques used in making hot-film anemometers and to personally inspect the

facilities of proposed vendors, it was felt necessary to visit the respective companies. This proved to be a very fruitful decision not only from the fulfillment of the stated intent but many additional sources of information were identified in terms of literature and researchers as a result of the meetings. In addition, professional suggestions on the application of hot-film anemometry to measuring sewer flow were obtained. A survey of obtained information is presented in the following.

To protect the probe from abrasive wear, an extra thick industrial coating will be required. Sensitivity and frequency response will be sacrificed for this addition.

Coatings are mostly sputtered quartz, however, teflon and zirconium oxide have been experimentally tried with varying success.

Self-cleaning systems that have been examined are mechanical scrubbers, excessive overheating to burn off deposits, and ultrasonic cleaning techniques. Overheating is not practical for flush mounted hot-films because of loss of heat to the substrate. Mechanical scribbers are not feasible because of the interference caused in the flow and lack of repetitive cleaning ability over long periods of time. Ultrasonic cleaning is the most promising; however, it would entail a costly development with uncertain results.

Static pressure does not affect the calibration of the probe in water ($\pm 2\%$) up to 1000 psi.

Calibration of probes in water is normally accomplished in an orificed free stream jet, a towing tank, or rotating tank of water.

The effect of using a larger sensor would be increased sensitivity which means a heavier coating could be applied; however, disadvantages are increased power requirements, reduced frequency response,

thermal expansion problems, and increased stabilization time due to the larger amount of substrate.

Probe operation in still air presents no problem when the overheat ratio is set up for water.

If several probes and multiplexing is used, recommended stabilization times were estimated anywhere from 0.7 seconds to 15 minutes! There is no existing past experience to indicate that activating for short periods and deactivating for long periods of time would be harmful.

The general independent consensus from all three manufacturers after extensive questioning is that no off-the-shelf probe now exists that could be expected to work in a sewer environment for more than hours or days at the most. The majority of applications for hot-film anemometers are for basic fluid mechanics research under laboratory type conditions. There is some history of industrial application (pulp slurries, power plant effluent) of hot-film sensors as one-shot measurements. Probe longevity was very short in these instances. The manufacturers are anxious to develop a reliable industrial type probe for liquids but a breakthrough in the near future is not anticipated.

SECTION V
THERMAL WAVE FLOWMETER
PRELIMINARY DESIGN CONCEPT

The thermal wave flowmeter correlates the time of flight of a thermal wave between two fixed points to the average flow velocity in the pipe. The basic sensor elements are depicted in Figure 4. The thermal wave in the fluid is generated by a heater element that is heated with a periodic voltage. The flow passing over the heater transports the wave downstream at some propagation velocity which is a function of the average velocity in the pipe. A thermistor element downstream senses the passing of the thermal pulse. An electronic counter is triggered when the pulse is generated and stopped when the pulse is sensed by the thermistor element. The distance between the heater and the thermistor, divided by the propagation time measurement, then determines the propagation velocity.

A separate stage measurement of the flow, utilizing electrical conduction techniques, is used to complement the flow velocity measurement in order to determine the volume flow rate. This unit is comprised of two stainless steel rods molded into a rubber mold which is then mounted in the sewer pipe.

The flow measurement system incorporates five thermal sensors mounted on the periphery of the pipe. The measurement of the average flow velocity in the pipe is obtained by averaging the longitudinal propagation velocities of the five thermal waves generated at the five symmetric peripheral positions. The averaging technique will compensate for irregular velocity profiles in the pipe caused by blockages, closing of valves, etc., and will give an accurate means of evaluating the average velocity. Surface contamination which was severely detrimental to the direct measuring hot-film anemometer technique will not affect the thermal wave except in magnitude of signal which the measurement

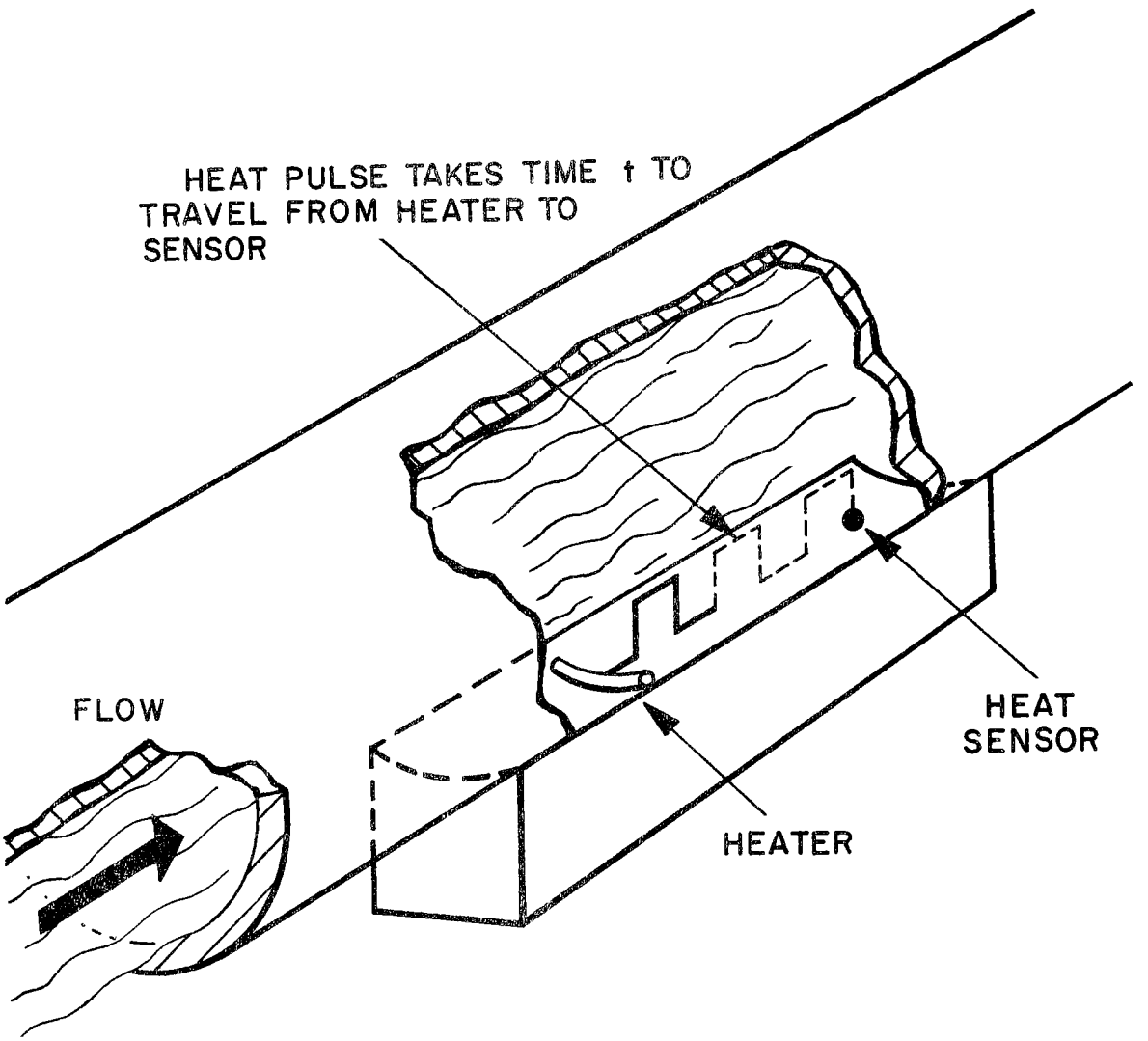

Figure 4. General Sensor Configuration

system does not rely on. Of course there is a minimum signal required such that signal-to-noise ratios are of sufficient level to properly activate the data gathering electronics.

The electronic portion of the system is designed by utilizing integrated circuits to monitor the thermistor signals from the sensor blocks. A correlator circuit is employed to derive the heater signal waveform. The sensor phase delayed outputs are then multiplexed together with the time of day and recorded. A portable cassette type recorder is used to record the sensor data on-line for approximately one week before a tape change is required. The data is recorded in a format that is adaptive to high speed data processing. The sampling of the volume flow rate is logically programmed such that higher rates are used during high flow conditions (i.e., during peak or storm conditions) and low sampling rates are used during low flow conditions.

SECTION VI
HYDRAULIC CONSIDERATIONS

Hydraulically, the flow of wastewater in a sewer may be classified as either open-channel or pressure-conduit flow. The two kinds of flow are similar in many ways but differ in one important respect. Open-channel flow must have a free surface, whereas pipe flow has none, since the water must fill the whole conduit. A free surface is subject to atmospheric pressure. Pressure-conduit or pipe flow, if cross section is circular, exerts no direct atmospheric pressure but hydraulic pressure only.

Sanitary sewers often are designed as open channels, that is, with a free surface for ventilation reasons or to provide an additional factor of safety. However, some are designed to flow just full at peak design flow, since there will be a free surface for ventilation at all lesser flows. There are many empirical methods to evaluate the flow in a sewer under various conditions. Darcy-Weisbach, Kutter, Hazen-Williams, and the Manning formulas are all well known and utilized for design of sewer systems. However, these formulae are empirical in nature and, due to the local velocity distribution at a particular measuring station, cannot be relied upon to give accurate flow data. For example, local blockage may cause a high stage of low flow with a much slower velocity than that predicted by the classic formulae. Therefore, in order to obtain an accurate responsive measurement system, it is necessary to measure both the average velocity in the pipe and the stage of flow. The volume flow is then simply:

$$Q = VA \qquad (3)$$

where Q = volume flow rate

V = mean velocity of the flow cross section

A = flow cross sectional area which is a function of the stage of flow.

The measurement of the average velocity is indeed the most difficult task in the development of an accurate flow meter. Because of the solids contained in combined sewer flow, it is imperative that nothing interfere with the cross section of the flow; otherwise the physical longevity would be very short.

Owing to the presence of a free surface, friction along the pipe wall, and local blockage, the velocities in a channel are not uniformly distributed in the channel section. The velocity distribution in a channel section depends also on other factors, such as the shape of the cross section, the roughness of the channel, presence of bends, and presence of other pipe connections in the vicinity. The measured maximum velocity in open channels usually appears to occur below the free surface at a distance of 0.05 to 0.25 of the depth. In a broad, rapid, and shallow stream or in a very smooth channel, the maximum velocity may often be found at the free surface. The roughness of the channel will cause the curvature of the vertical-velocity distribution curve to increase. On a bend, the velocity increases greatly at the convex side, owing to the centrifugal action of the flow. Laboratory investigations have found that flow in straight prismatic channels is in fact three dimensional manifesting a spiral motion, although the velocity component in the transverse channel section is usually small and insignificant compared with the longitudinal velocity components (58), (59), (60), (62).

As a result of the previous discussion, the implied requirement in making an average flow measurement in an open channel is that several measurements must be made which correlate to various portions of the cross sectional flow area. These measurements can then be averaged and correlated to the mean flow rate in the pipe.

The present measurement system is composed of several longitudinal velocity measurements at the periphery of the pipe which, when averaged, will correlate to the mean velocity of the flow cross section. A separate device to measure the stage of flow will then provide the necessary measurements for determining the volume flow rate.

SECTION VII
RESULTS OF PRELIMINARY LABORATORY EXPERIMENTS UTILIZING THERMAL WAVE FLOWMETER

In order to gather experimental data utilizing the concept of the thermal wave flowmeter, it was agreed between EPA and HCI to extend the time of Phase I. During that time, HCI fabricated and tested sensor blocks for a 1-inch and 2-inch I. D. pipe. Average flow velocities in the 1-inch I. D. pipe ranged from 1. 0 to 5. 5 ft/sec or Reynolds numbers from 6850 to 37, 700. Average flow velocities in the 2-inch pipe ranged from 0. 5 to 1. 6 ft/sec, or Reynolds numbers from 6850 to 21, 900. The purpose of the experiments was to determine the characteristics of the thermal wave flowmeter as a function of average flow velocity, peripheral position in the pipe and pipe diameter. Measures of evaluation are in terms of sensitivity and repeatability.

Sensitivity is defined as the ratio of the thermal wave propagation velocity to the average fluid velocity in the flow cross section. The Sensitivity of the 2-inch I. D. pipe data was approximately 70 times greater than that for the 1-inch pipe (0. 035 compared with 0. 0005). Thus, the thermal wave propagation velocity increases 0. 035 ft/sec for every increase of 1 ft/sec in average flow velocity in the 2-inch pipe. The model test data demonstrated a need for improved sensitivity and reduction in scatter, which should be available in the full scale model with the proposed full scale design.

The basic sensor block used in the experiments, depicted in Figure 5, was flush mounted on the periphery of the pipe. The thermal wave in the fluid was generated by a nichrome wire that

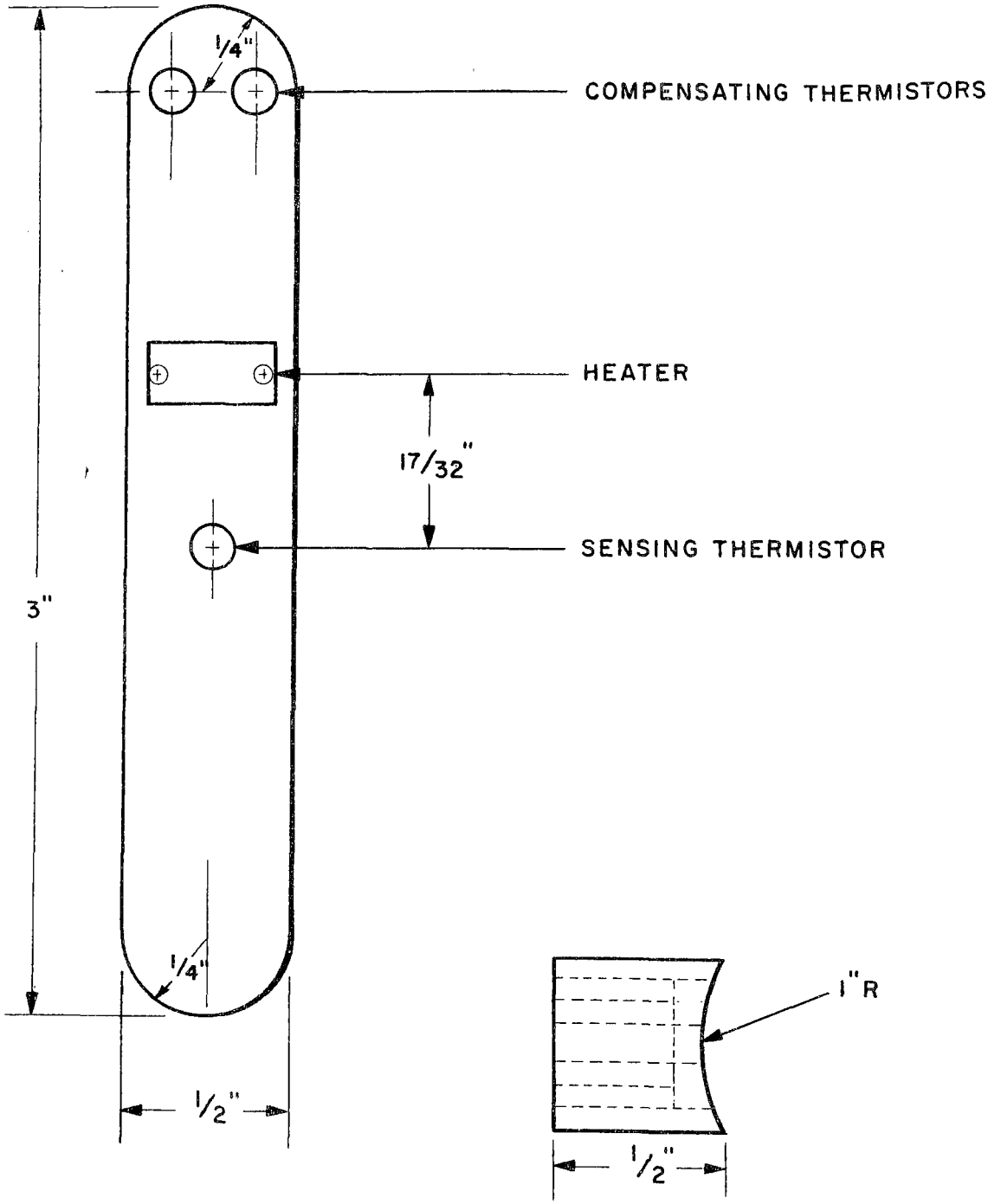

Figure 5. Model Test Sensor Block.

was heated periodically. The thermal wave was sensed by a thermistor whose distance, d, from the heater was fixed and accurately known. The heater temperature was raised approximately 80° C which causes approximately a 1° C rise in the water passing over the downstream sensor. The time of flight of the thermal wave when divided into the separation distance, d, determines the value of the local propagation velocity.

Figure 6 depicts the hydraulic apparatus used to conduct the experiment. Both the 1-inch I.D. pipe and 2-inch I.D. pipe were used during the tests. Average velocity was measured with a Fischer Porter No. 102732 lab rotameter with fluid velocity being maintained with a constant head supply. The magnitude of flow velocity was controlled by a series of valves as shown. The sensor block was flush mounted in the tube approximately 6-inches from the reservoir end such that pipe entrance affects were negligible and fully developed turbulent flow existed over the sensor block.

The assembled instrumentation is indicated in Figure 7. Two thermistor beads and a nichrome wire heater were assembled into an aluminum block with the spacing indicated on Figure 5. The heater was supplied with a varying amplitude power wave whose frequency was determined by a low frequency oscillator. The driving frequency was varied initially to determine the best signal-to-noise ratio. All test data were taken at 0.5 Hz by utilizing a square wave voltage into the heater. A thermistor bridge with a temperature compensating network was installed in the sensor block. A preamplifier to provide a high level signal was connected to the output of the sensor network and the signal fed to the filter network. The output of the filter was fed to a zero crossing detector and a square

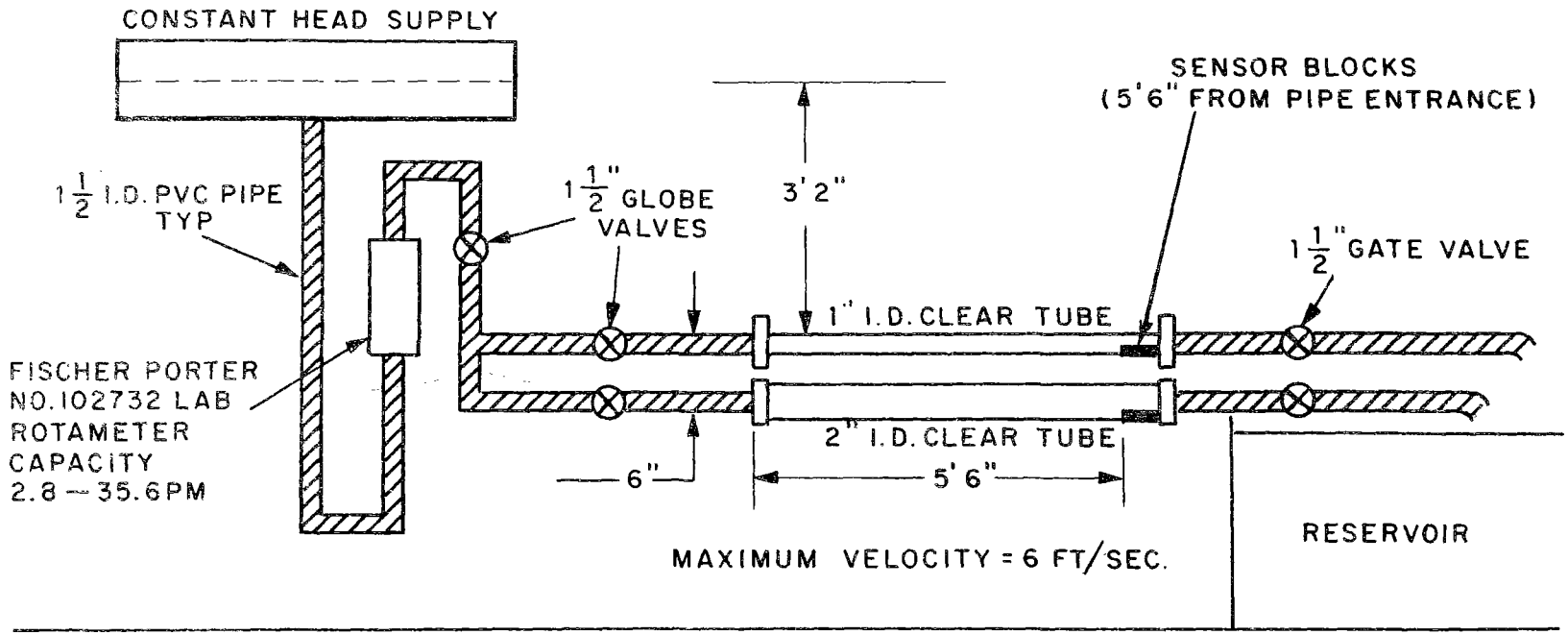

Figure 6. Model Test Hydraulic Apparatus

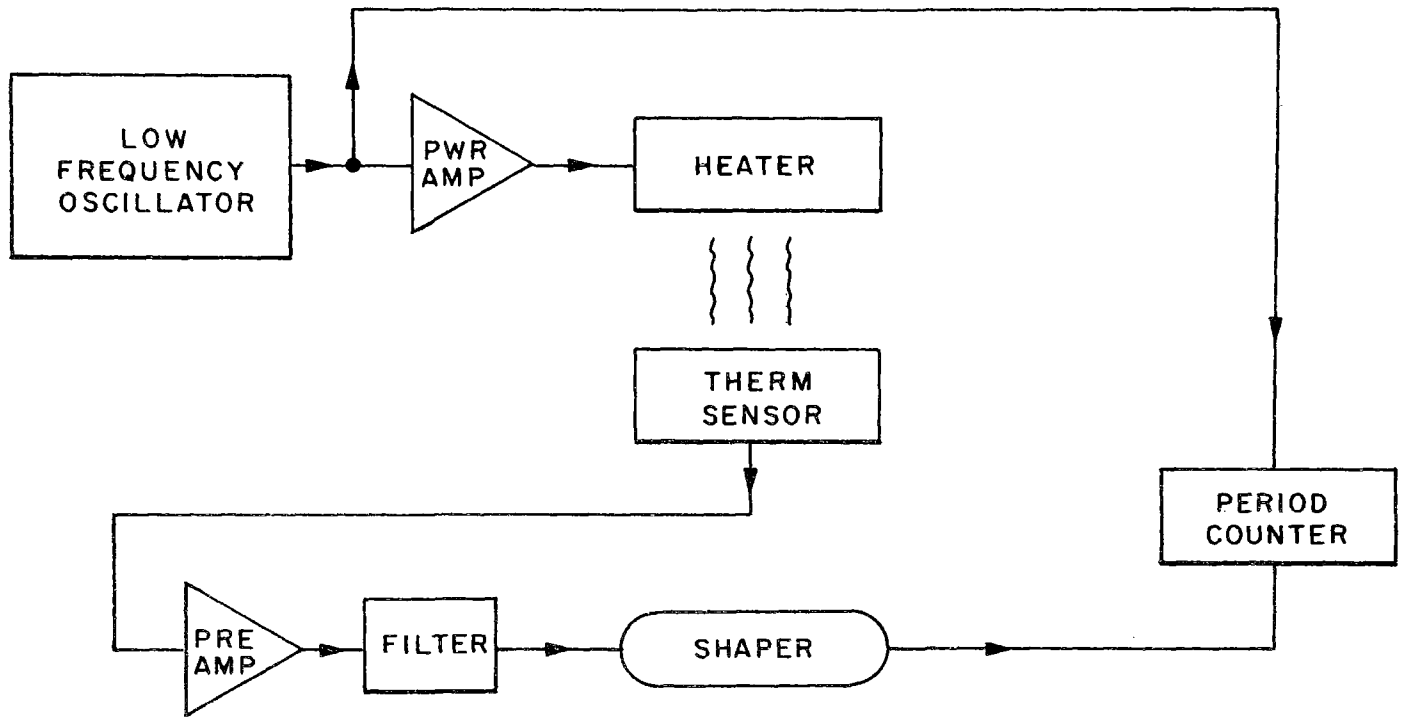

Figure 7. Experimental Instrumentation for Model Flow Tests.

wave is generated with a duty cycle proportional to the time between the positive going zero crossing of the heater and the sensor. A counter was used to determine the time-of-flight of the thermal wave. Each data point was derived from averaging ten consecutive readings from the counter.

TEST RESULTS

The test results are contained in Figures 8 through 14. The graphs plot the thermal wave propagation velocity versus the average or mean flow velocity in the pipe. The curves were determined by using a least squares curve fit. The following observations are made concerning the graphs.

1. The sensitivity for the 1-inch I.D. pipe data is very low (0.0005).

2. The sensitivity of the 2-inch I.D. pipe data is approximately 70 times greater than the 1-inch pipe data (0.035).

3. Data from various peripheral positions appeared very similar; that is the flow appeared axisymmetric.

4. Inserting a flow wedge ahead of the sensor block in the 1-inch I.D. pipe increased the thermal propagation velocity by a factor of two but did not change the sensitivity appreciably.

5. Inserting a flow wedge ahead of the sensor block in the 2-inch I.D. pipe did not appreciably affect the thermal wave propagation velocity but lowered the sensitivity from 0.035 to 0.02.

DISCUSSION OF TEST RESULTS

The graphs of the flow data clearly indicate the ability of the thermal wave concept to measure average flow velocity, but, at the same time illustrate some unknown elements in the present model test configuration. The following is concluded from the test results.

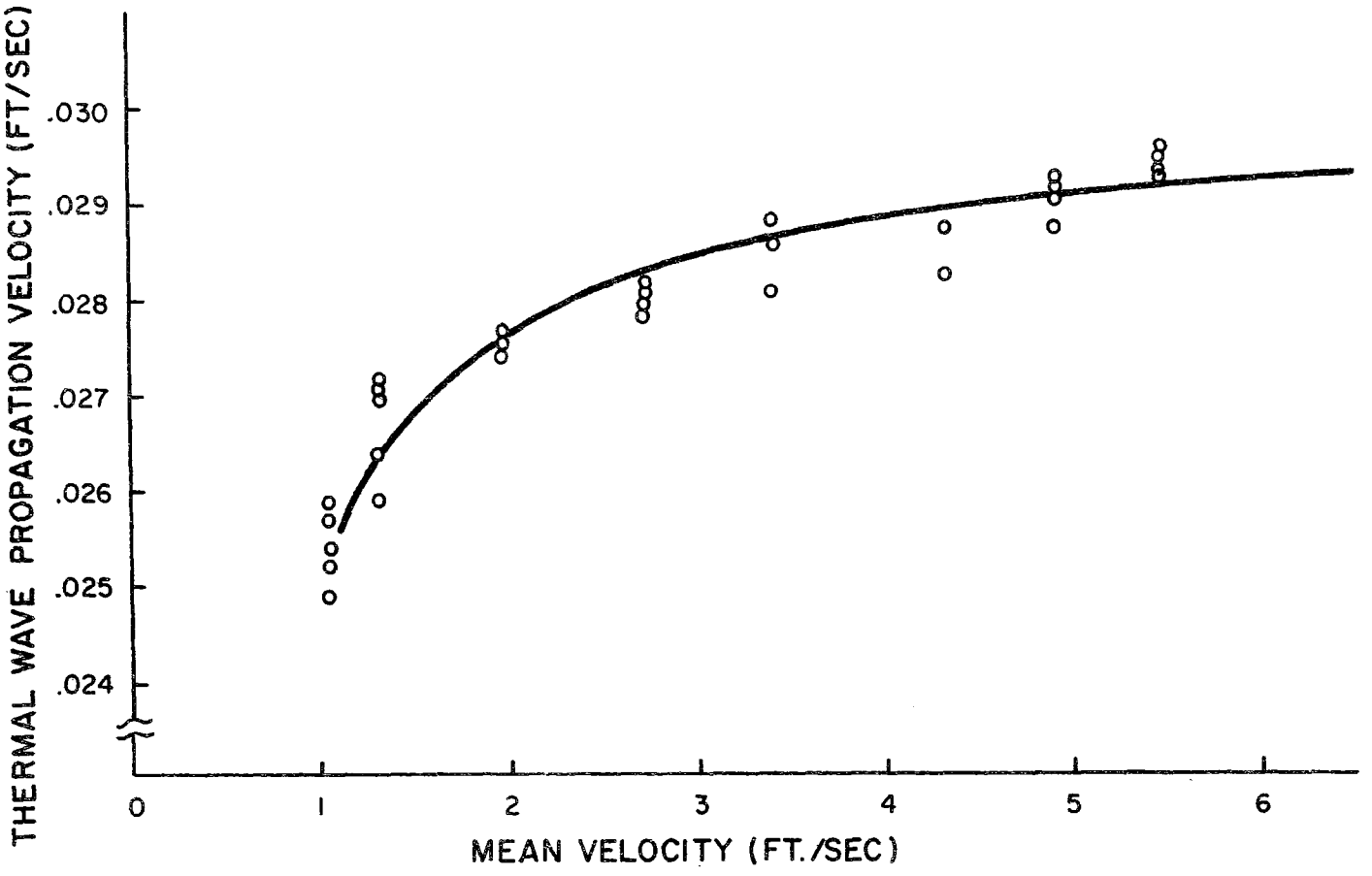

Figure 8. Thermal Wave Velocity Versus Mean Velocity for the Sensor Block on the Side of a 1-inch I.D. Pipe.

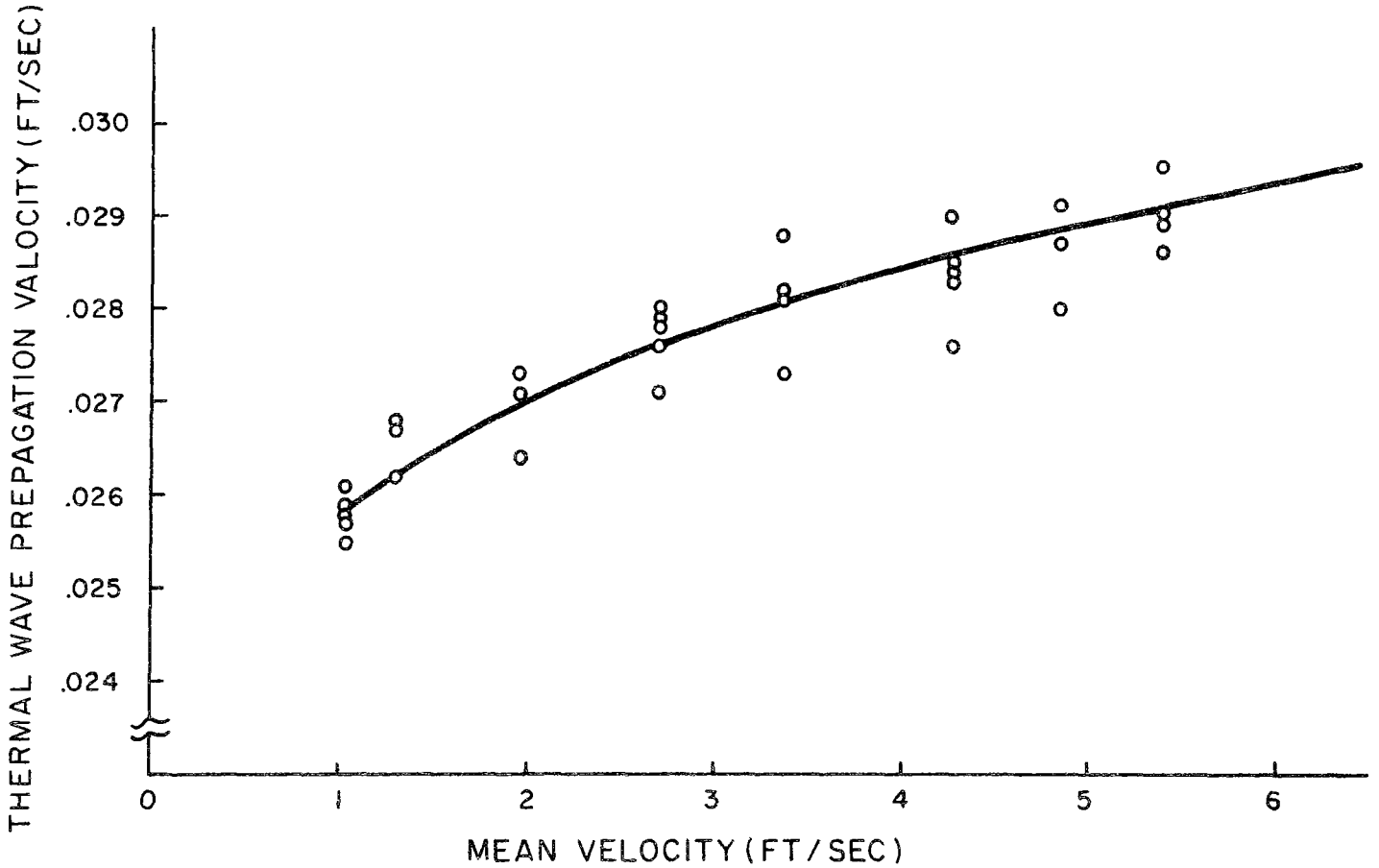

Figure 9. Thermal Wave Velocity Versus Mean Velocity for the Sensor Block on Bottom of 1-inch I. D. Pipe.

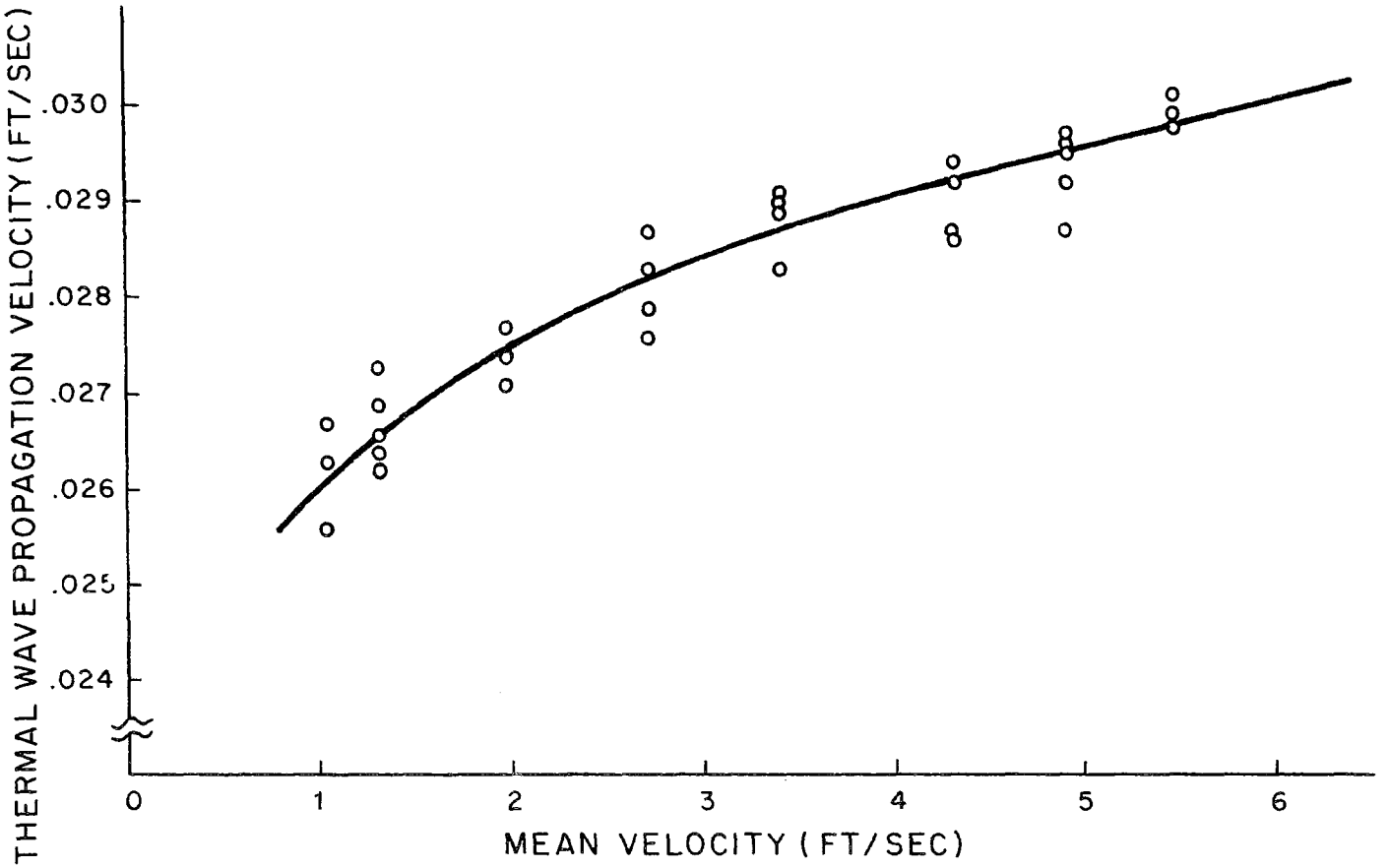

Figure 10. Thermal Wave Velocity Versus Mean Velocity for Sensor Block on Top of 1-inch I.D. Pipe.

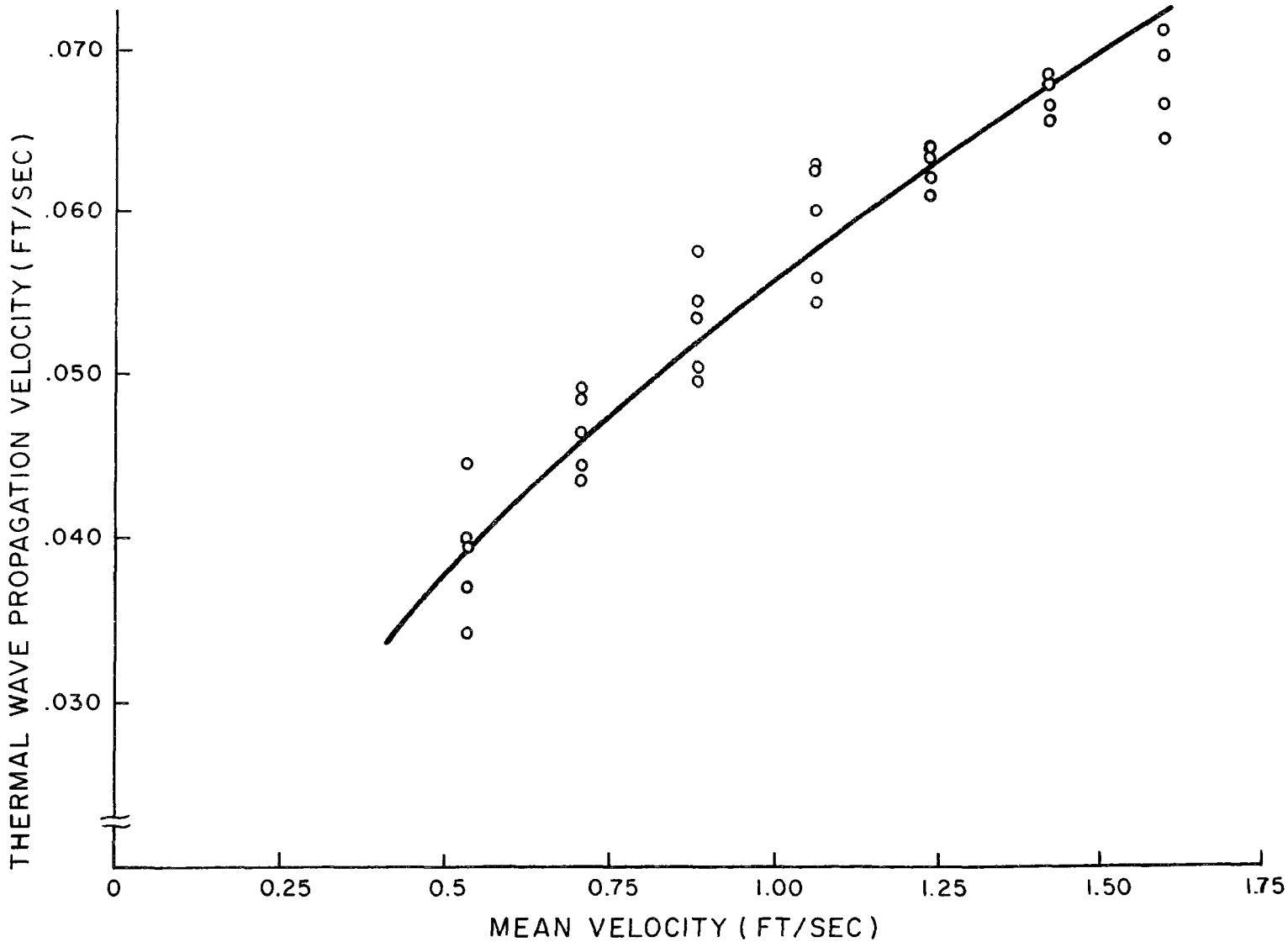

Figure 11. Thermal Wave Velocity Versus Mean Velocity for Sensor Block on Side of 2-inches I. D. Pipe.

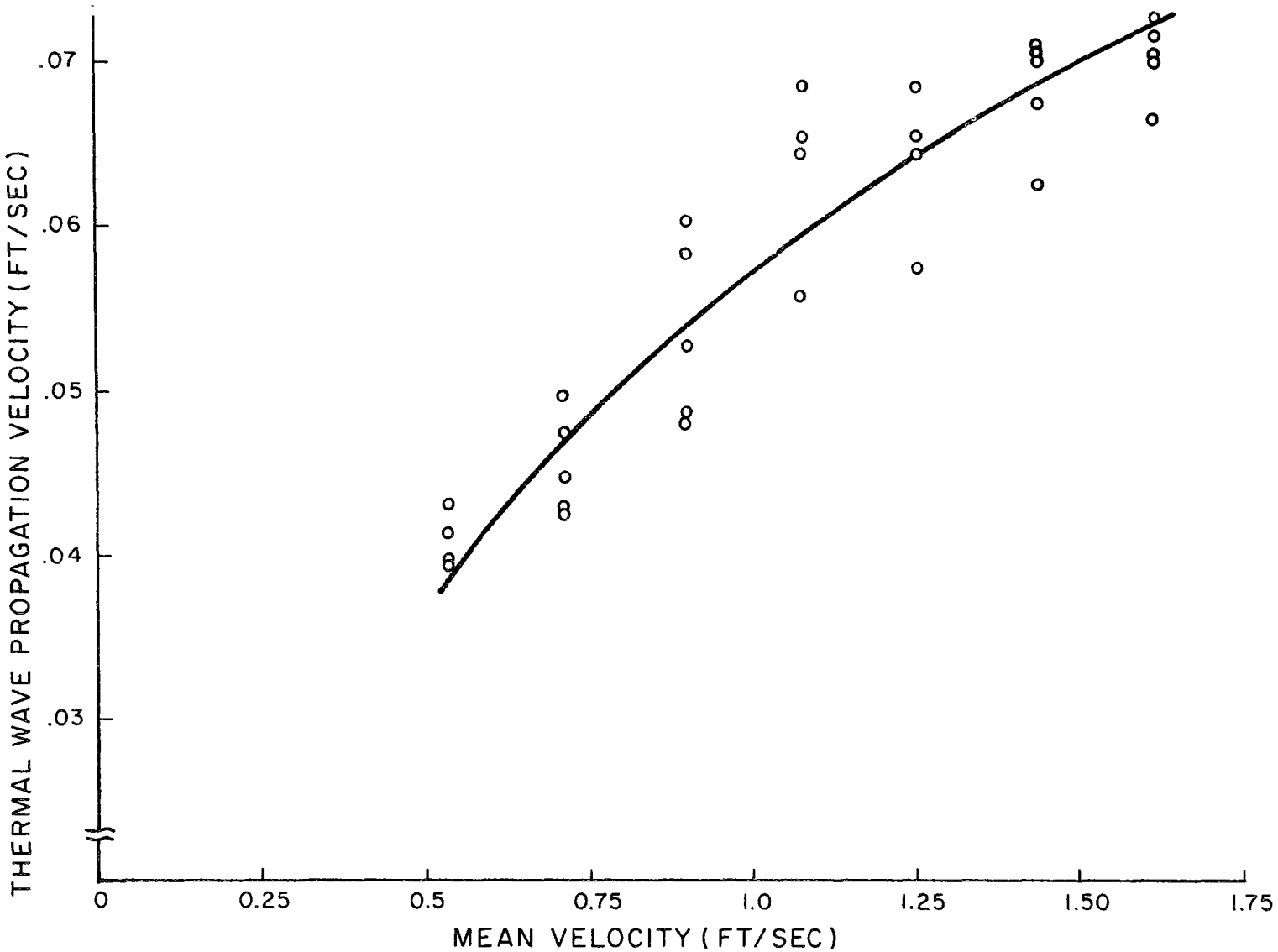

Figure 12. Thermal Wave Velocity Versus Mean Velocity for Sensor Block on Bottom of 2 -inches I.D. Pipe.

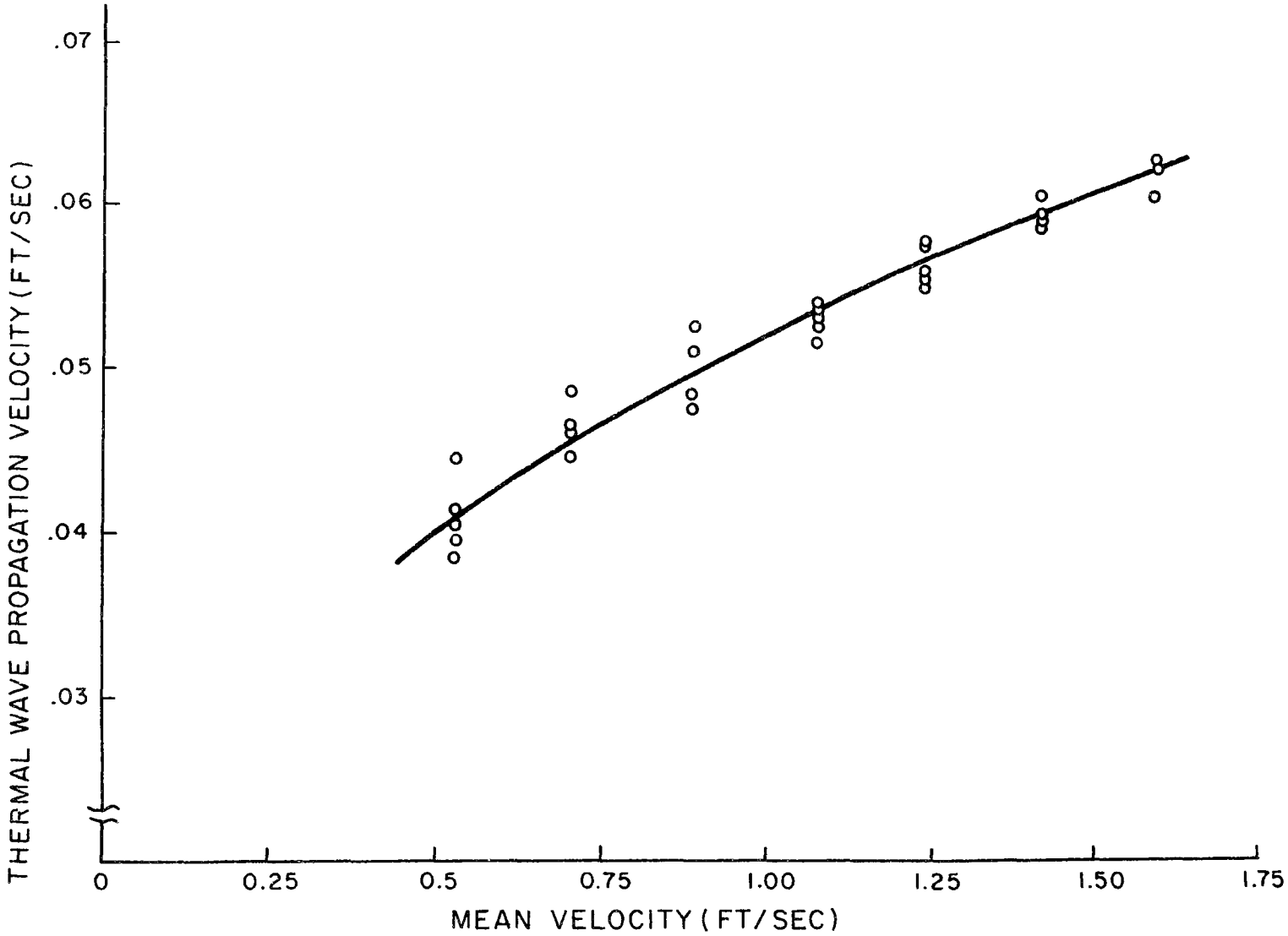

Figure 13. Thermal Wave Velocity Versus Mean Velocity for Sensor Block on Side of 2-inches I.D. Pipe With Wedge.

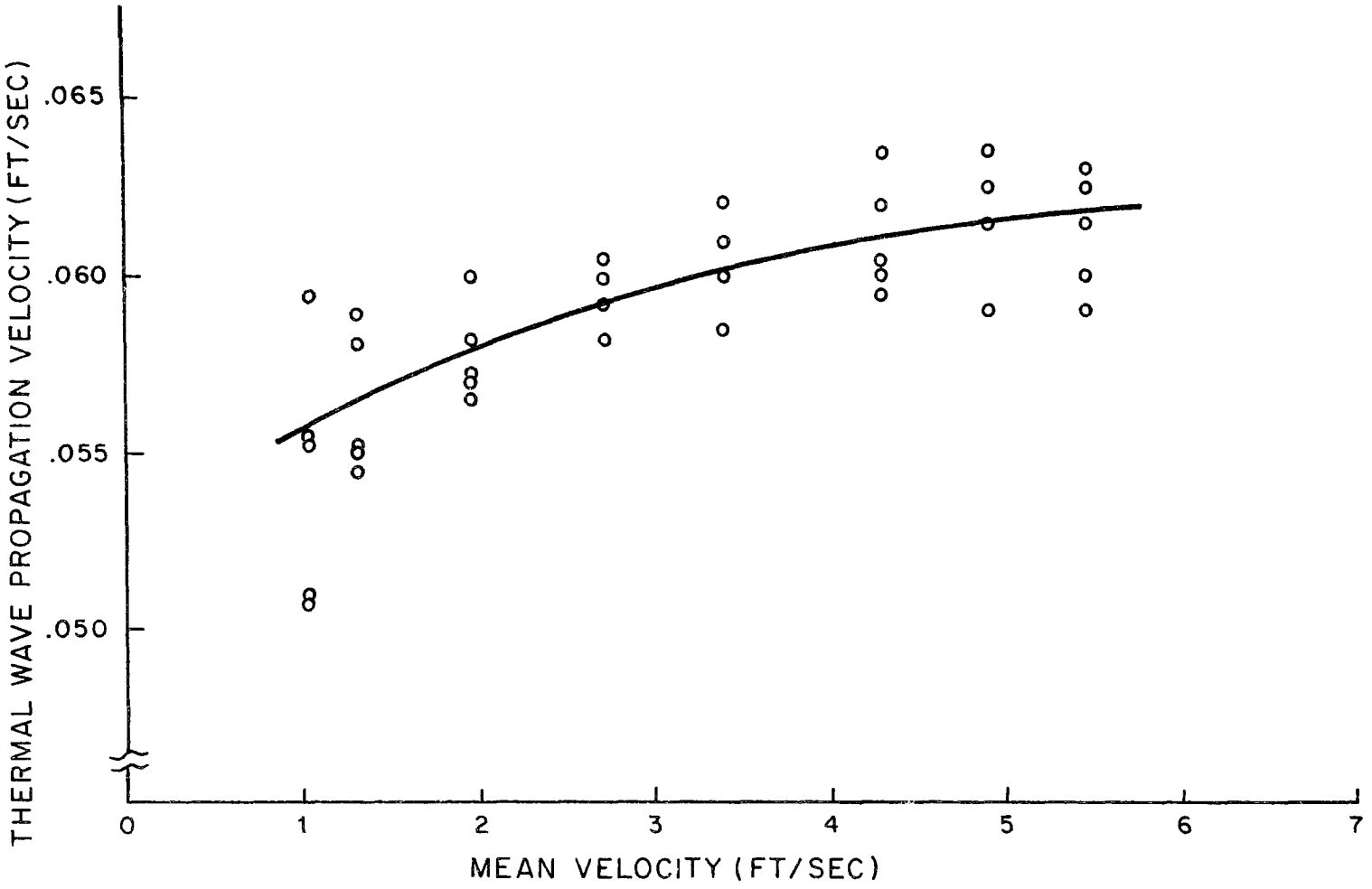

Figure 14. Thermal Wave Velocity Versus Mean Velocity for Sensor Block on Side of 1-inch Pipe With Wedge.

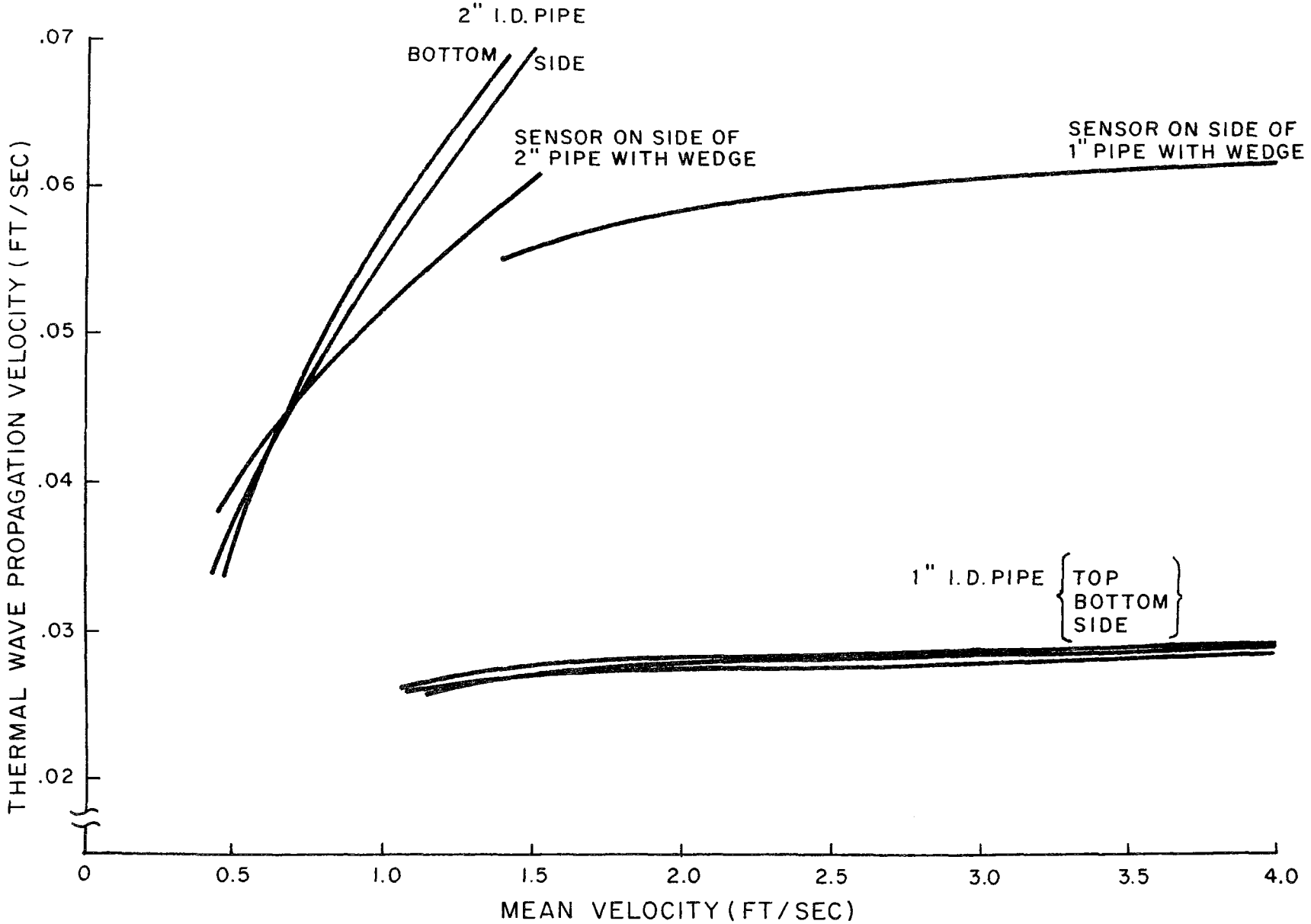

Figure 15. Thermal Wave Velocity Versus Mean Velocity for all Configurations.

1. Due to the flush mounting of the sensor block, the sensitivity of the thermal wave propagation velocity to the average velocity in the pipe is very low (0.0005 in 1-inch pipe and 0.035 in 2-inch pipe).

2. The experimental data collected with the present model test configuration in the 1-inch pipe would not be satisfactory for measuring fluid velocity if similar results were to be obtained in the full scale system. This is due to the low sensitivity and the scatter in the data points. It appears that when the sensor is flush mounted, there is a limiting value of the thermal wave propagation velocity as the average velocity in the pipe is increased. This is believed to be caused by the steepness of the velocity profile at the wall caused by the viscous friction. Another problem of the data taken thus far is the amount of scatter in the thermal wave propagation velocity for a constant average velocity. The variation is believed to be caused by the inherent stretching and contracting of the wave as it moves down the pipe and thermal noise. Discrete measurements, therefore, would indicate considerable scatter.

3. It is postulated that the change in sensitivity between the 1-inch I.D. pipe and 2-inch I.D. pipe was due to variance in the relative placement of the sensor block in the pipe. This is believed to be true because of the steepness of the velocity profile near the wall and the non-consistent effects caused by using the flow wedge.

Although the test model data results are not encouraging from the aspect of sensitivity and scatter, they do validate the concept of using this technique to measure flow velocity in water. Other investigators (66) are developing a similar technique to be used in air with a great deal of success. They also have concluded that it is not affected by contamination and has no moving parts. The application of the technique in water has problems which are coming to light as a result of the past experiments, but, it is believed that with further development these deficiencies can be corrected.

SECTION VIII
DETAILED PROTOTYPE DESIGN

The experimental model test data showed that improvement would have to be realized in the full scale configuration in terms of sensitivity and scatter. The problem of increasing sensitivity is best solved by generating the heat in faster fluid streamlines, in order that the thermal wave velocity is more responsive to changes in the average flow velocity. This can be achieved by using a sensor block that is configured as shown in Figure 16. Mounting the heater and sensor on the upstream side of the arc where the fluid streamlines are compressed means that the local flow must speed up in order to pass the volume of fluid that is flowing between adjacent streamlines. The protrusion into the flow is small, 0.5-inch, but should significantly increase the sensitivity of the measurement. The problem of scatter is caused by the turbulent nature of the flow and noise that is superimposed on the response signal. A correlation of the input heater signal to the thermistor response signal is proposed to provide a moving average type reading of the thermal velocity and therefore reduce the effect of any discrete flow velocity measurement.

The measuring system will utilize five thermal sensor blocks mounted at 30° intervals as shown in Figure 17. The detailed installation is depicted on HRC Drawing No. 71320002. The sensor block (HRC Drawing No. 71320003) is composed of an anodized aluminum block whose exposed surface has a 6-inch radial arc with a 5-inch chord length, and is fastened to the sewer pipe. The protrusion into the flow from the pipe wall is 0.5 inches. The temperature compensating thermistors, heater strip, and thermal wave sensing thermistors are flush mounted on the upstream side of the arc. This configuration should provide greater sensitivity because of

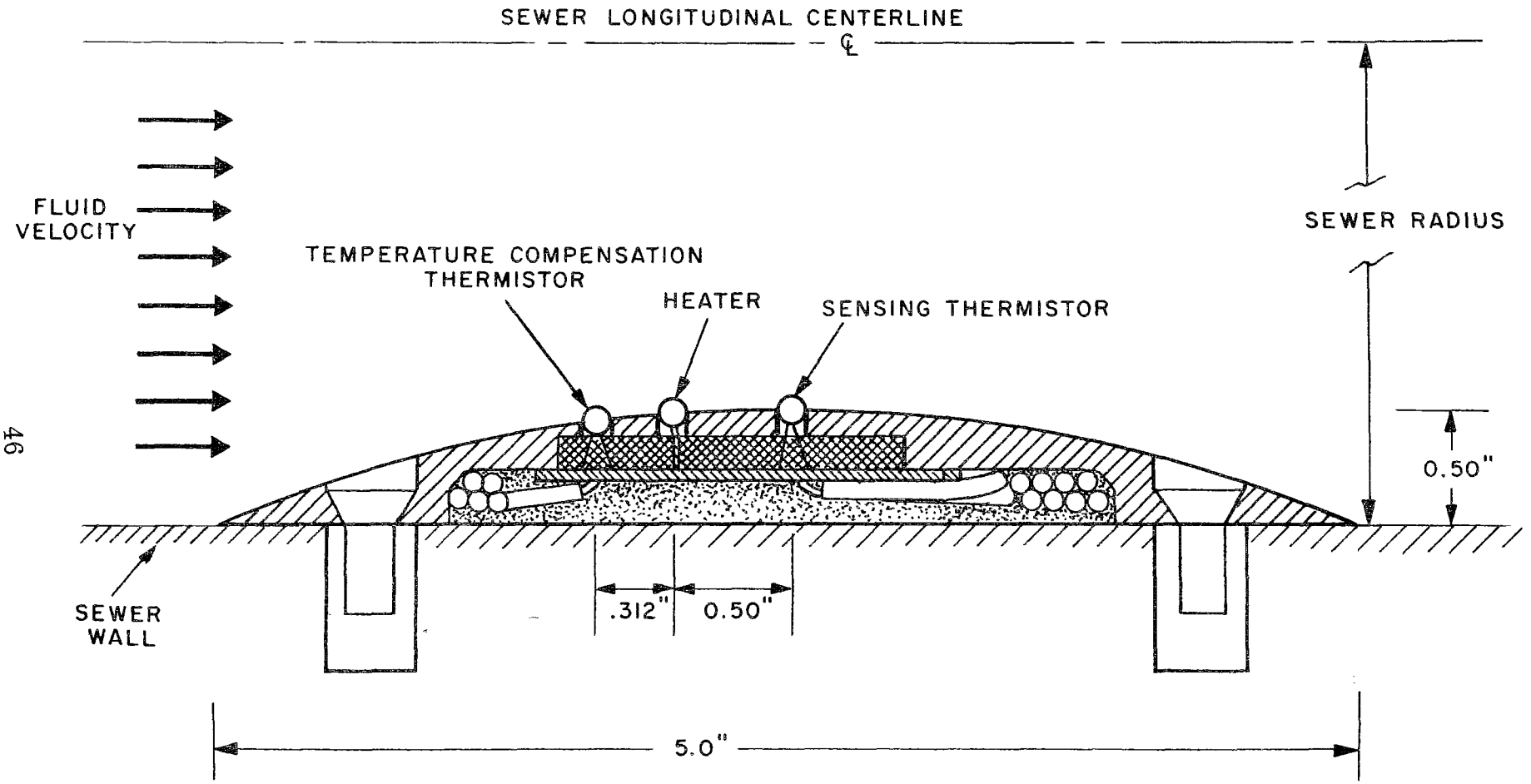

Figure 16. Full Scale Sensor Block in Cross-Section

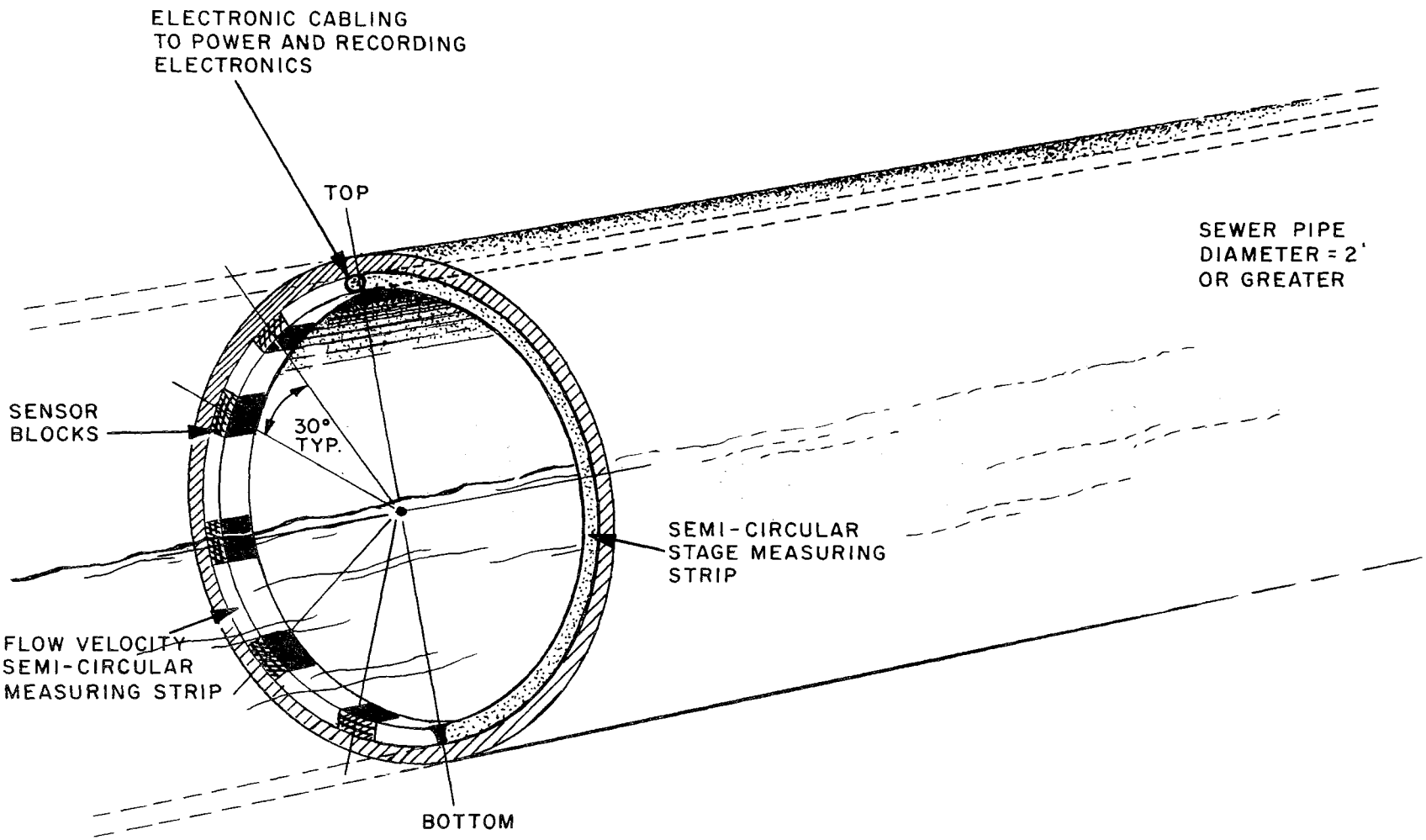

Figure 17. Proposed Sewer Pipe Installation of Flow Measurement System

the compression of the fluid streamlines as the flow passes over the sensor block. The sensor blocks are approximately 1-3/4-inches wide and are interconnected by a flexible epoxy strip of the same geometrical cross section. The epoxy strip serves as the electrical conduit for the sensor power and response signals and is also required for forming the strip to the inside shape of the pipe. Manufacturing of the strip assembly entails making a mold of the proper cross sectional shape and length. Each sensor block will be pre-assembled, wired and placed in the mold, and then the epoxy compound will be poured into the mold and allowed to cure. The final assembly will thus be one integral composite strip with the sensor blocks molded in place. The sensor blocks, themselves, can economically be made from 12-inch schedule 40 pipe segments.

The height measuring system utilizes an electronic liquid level gauge which is manufactured by Marsh and McBurney, Inc. The liquid level gauge consists of two solid rods, formed to fit the inside curvature of the sewer pipe. One rod is driven by an electrical signal, and the other rod acts as a variable tap, whose output varies as a function of water level. The sensor portion of the instrument, normally a linear device when used as a straight probe, provides a non-linear output when curved to fit the conduit. This non-linearity is corrected by the data processing to be employed. The overall instrument is capable of accuracies better than 1% of full scale. The installation layout in the sewer pipe is depicted in HRC Drawing No. 71320004. The rods are imbedded in a faired strip similar to that used for the flow velocity sensor strip and fastened to the inside periphery of the pipe. All electrical leads are brought out of the strips at the top and conduited to the location of the recording and power electronics which will be located either in a man-hole space

in an instrumentation shack adjacent to a manhole access. The sensors employed to monitor the heat pulse are thermistors that have been installed in the transducer block previously discussed. Thermistors rather than the hot film probes are employed because of their glass coating (longer life) and lower cost. The size of the thermistors selected provides a small enough time constant to enable the unit to respond to the 0.5 Hertz heat pulse rate. The thermistors have been electrically connected in series with an equal number placed geometrically parallel and upstream from the heater element for temperature compensation. By connecting the sensors in series, a sensing bar is formed which is parallel to the heating element. The bridge amplifiers employed are of the servo type with the temperature compensating elements enabling the sensitivity to remain independent of the liquid temperature. The signals are connected from the bridge amplifiers to the correlator circuits via the automatic gain control amplifiers. These amplifiers provide a constant signal to the correlators while the input signals vary over a range of a hundred to one.

The correlator circuitry employed is one which has recently been developed around the multiplying electronic elements now available. This circuitry is expected to produce signals which, over a period of 60 seconds, will produce a signal which is ten to one hundred times the level of the background noise. The signal fed to the heater element is an offset square-wave at a rate of 0.5 Hertz. The sensors produce a half sine pulse whose peak is delayed in time by the interval required for the thermal pulse to travel the pre-set distance between the heater element and the sensor bar. At the sensor bar, the signal noise is a result of the water turbulence plus the stretching and contracting of the thermal wave. The correlator provides an average of

these random events resulting in their self-cancellation. The shortest path thermal wave, however, is repetitious and therefore reinforces itself. The outputs of the correlators, which serve as long term averagers, are fed to voltage controlled phase shifters. These devices provide for scale expansion of the output signals. The signals are then sent to a period counter for display and digitizing. A multiplexer is then employed to sequentially monitor the sensor outputs and the stage height. The digitized outputs are stored on a digital cassette recorder along with the time of day of the measurement. The digital cassette recorder provides for the maximum accuracy while employing a logic scheme enabling more data to be acquired while the sewer flow is rising than at times of minimal flow. The stage of flow measurement is also recorded by digitizing the height gauge signal.

By recording the signals in this manner, the maximum flexibility in data processing can be obtained. Chart recordings or deviation measurements of the data can be obtained from any data processing center. Other methods of recording the data, remote monitoring or chart recordings can be employed as desired. The details of the circuitry employed can be obtained from the design drawing package supplied with this report. The electrical circuits can be traced by reviewing Drawing No. 71320010 entitled, "Block Diagram Flow Measuring System".

SECTION IX

PRELIMINARY FLOWMETER CALIBRATION

Prior to the insertion of the flowmeter into a sewer for data collection, a calibration of the unit was accomplished. In order to attempt a calibration on a meter such as this, designed to monitor the flow velocity in the boundary layer region of both open and pressurized flow, it becomes necessary to deviate from a simple primary standard insertion test. No sewer test channels were identified having high volume flow capability and accurate flow monitoring. A test to determine the flow characteristics of the sensor and the accuracy and repeatability of the electronic measurement instrumentation was then undertaken. A large volume water tank with an extremely accurate flow rate and wide dynamic range was identified at the Naval Research and Development Center at Carderock, Maryland. A contract was arranged with this facility for the use of a carriage in an 1800-foot towing channel for one day. Accuracy of the towing carriage was identified to be at least 0.02 foot/second. Rigging to enable the quick insertion of a towing strut was also found to be available. It was therefore decided to attempt to configure the sensor as a member of a towing strut. The perils of this decision were identified as being the different type boundary layer configurations which were likely to be encountered when the sensor block was removed from the concrete wall surface of the sewer pipe. An examination of the hydraulic design parameters indicated that quick data checks would be required to ensure the expected turbulent boundary layer configuration exists over the one to ten feet/second flow range.

Since the instrument presently employs a long term averaging device to smooth its readings, it was also determined that the full

range of flows could not be investigated due to the limited time that a constant flow can be maintained. A range of 4 to 5 feet/second was identified as the limit to obtain readings from the calibration test.

Even with the limitation described previously, it was decided that a full scale test of limited range would provide more working knowledge than a scaled one with full dynamic range; so, the tests were conducted. The calibration data are summarized in Figure 18. To acquire the curve as shown on Figure 18, it was necessary to utilize a sand strip one-half inch wide taped to the leading edge of the strut in front of the sensor block. This mechanism causes the laminar flow of the strut to be turbulent at even the low flow speeds and thus avoids the transitional flow encountered in the one to two feet/second flow ranges as determined without the sand strip. The time required for equipment set up and making initial data runs to determine the presence of fully developed turbulent flow for all data flow rates resulted in the inability to obtain summary data points, as were desired, due to the limited total time available.

The plan was to first acquire data on the re-calibrated sensor/electronic unit, and then to gather data at flow rates under one foot per second on the other unit. However, sufficient time was not available to allow the second data set to be obtained.

Checks after the day of calibration revealed proper operation of the second sensor's electronics, but a combination of two dynamic adjustments was required to affect a change in the range, and the necessary test equipment was not available at the test site. The sensor electronics used to acquire the data were re-calibrated the day after the test, and the results are presented in Table 1 and Figure 19.

Table 1. Instrument Electrical Calibration

1	2	3
Input Signal Phase Shift (m sec)	Delay Correction for Heater Output -400 m sec	Flowmeter Output Reading (m sec)
502	102	65
527	127	116
556	156	190
584	184	276
612	212	361
645	245	511
661	261	591
684	284	716

Columns 2 and 3 have been curve fitted by a least squares method and the following equation determined:

$$\text{Thermal Pulse} = 16.4 \left(\begin{matrix}\text{meter read} \\ \text{(m sec)}\end{matrix}\right)^{0.433}$$

An index of determination of 0.998 was obtained for this data.

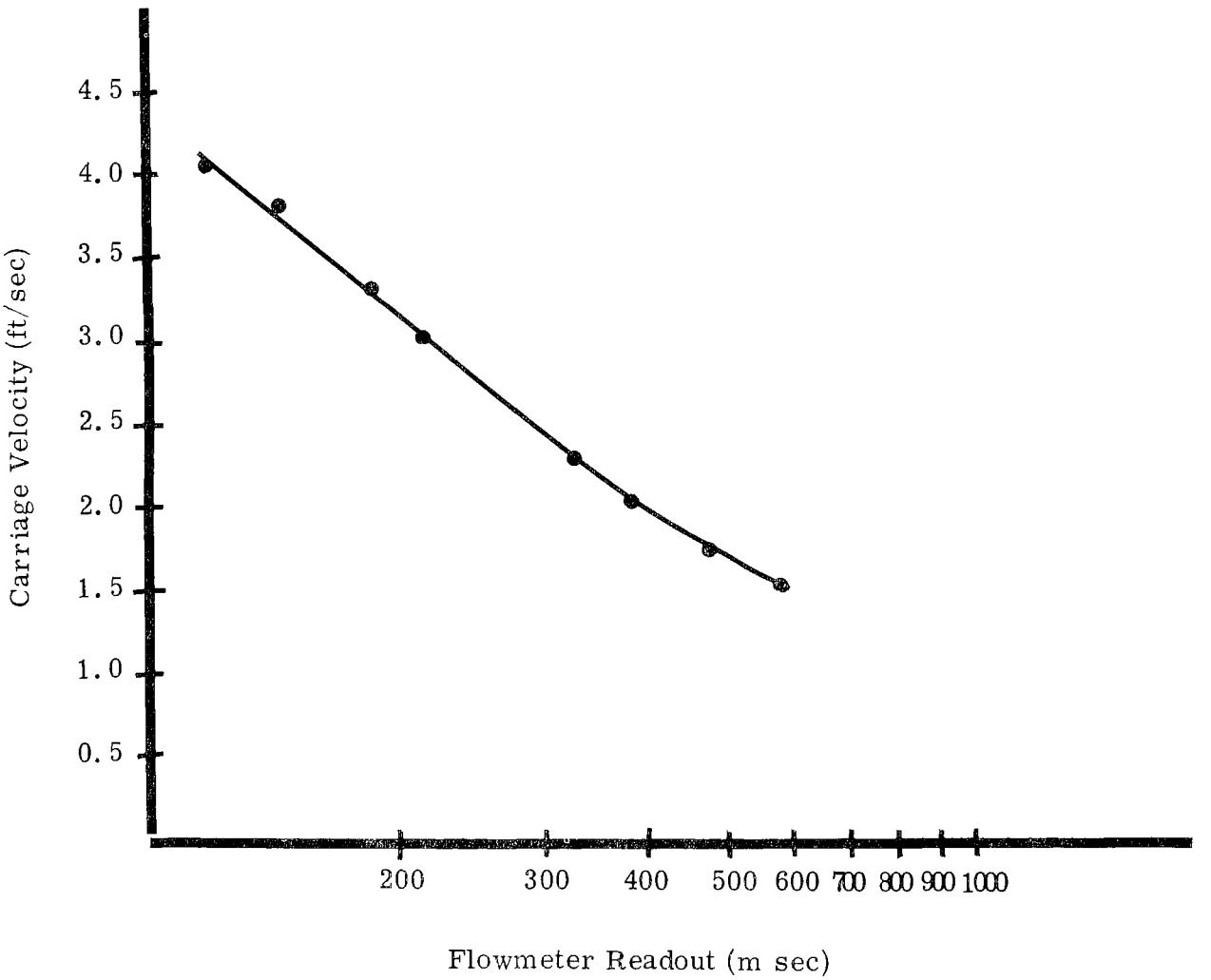

The above curve is fitted by a least squares method and provides the following equation:

$$\text{Flowmeter Readout} = \frac{1077}{\text{Average Flow Velocity (ft/sec)}} - 154.6$$

Figure 18. Calibration Data

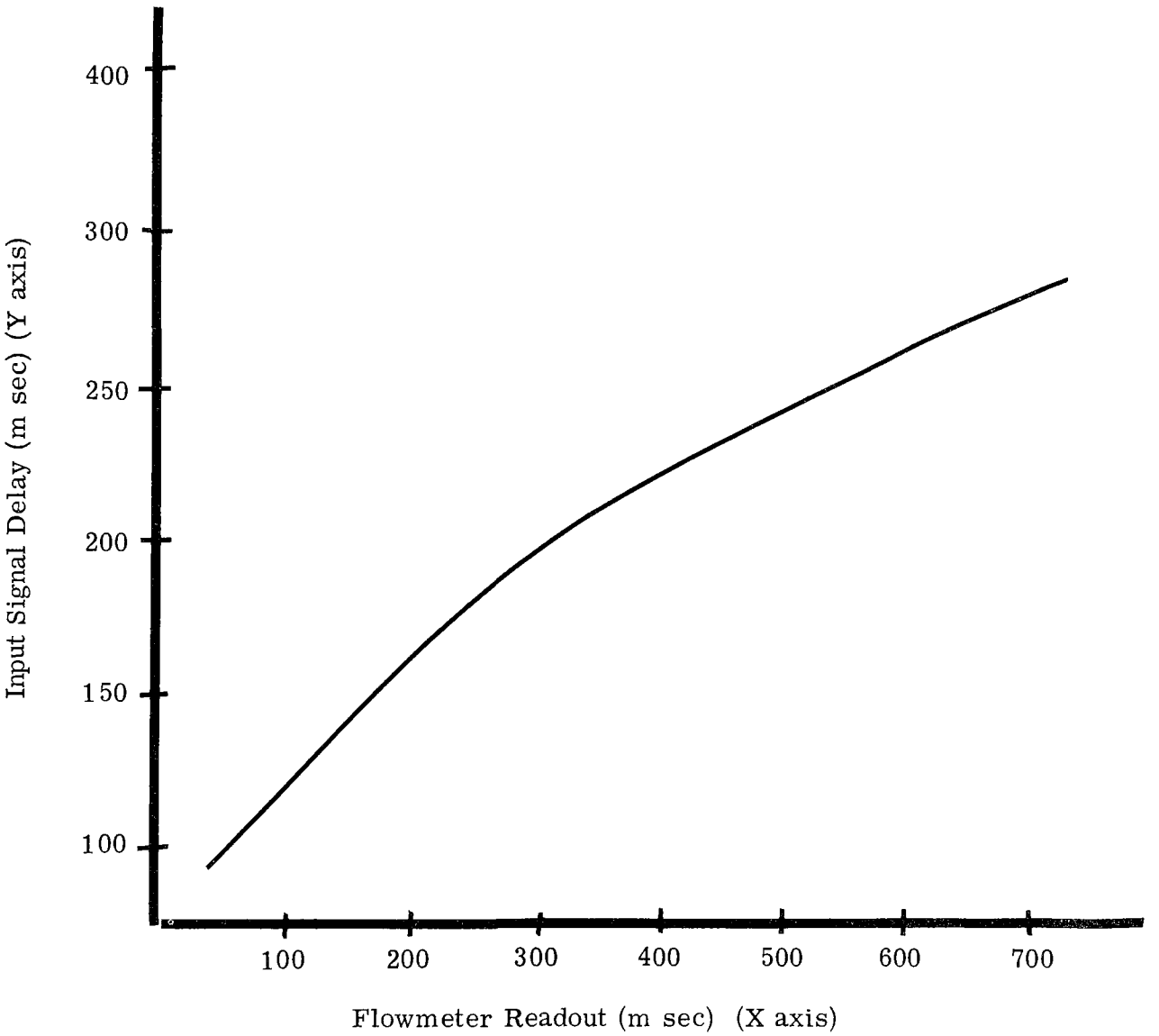

Data obtained from Number 2 phase shifter using counter readout. Electrical insert signal calibration provides the following equation:

$$y = 16.4 \ . X^{0.433}$$

y, and X are axis as indicated.

Figure 19. Electrical Calibration Data

It should be noted that the phase shift data were provided by electronic test instrumentation as an insert calibration.

Data containing a two-step settling time was observed during the data gathering. The second step of the data provided a regular and repeatable calibration curve which had been predicted. The second step response in the settling time however was not anticipated and had not been revealed by any of the electronic calibrations. Therefore, it is concluded that the thermal plume must be undergoing a transition at some point in the steady flow conditions. At the present time this mechanism is not clearly understood, but it is felt that it could possibly be attributed to the special strut used in the calibration but which would not be found in a sewer installation.

In order to better understand this phenomenon and also to gather data on the uniformity of the ratio of measured flow velocity to average free stream velocity for different sensor blocks, it is recommended that a pre-demonstration test be conducted under controlled conditions. This will also provide a true calibration of the entire flowmeter. The conformance of the data to a smooth and predictable curve shape is very encouraging. The variation in the plume delay from the calculated values indicates that the streamlined shape of the sensor block is enabling the heat plume to penetrate further into the flow stream than had been anticipated. This would indicate an improvement over the performance previously anticipated by this measurement technique. The calibration curves were obtained by performing a least squares fit to the data points. An index of determination of better than 0.99 was obtained for each of the curves. Data points for the meter readout calibration were selected from the total data required on the basis of on site observations regarding the validity of each data point. The curves as shown

appear to be valid; however, more detailed data are required before it can be stated with complete certainty that this unit is calibrated and can acquire data in a sewer flow.

SECTION X

FULL SCALE TEST SITE SELECTION

The discussions which HCI has had with area sanitary commissions have revealed many suitable installation sites. The parties contacted requested the submission of approved design and fabrication drawings prior to the finalization of the site. Agreement as to the facilities required centered about a sewer with a large dynamic flow rate and easily accessible manholes. The addition of a small instrument shack next to the sewer installation is considered a requirement in order that a protective enclosure for the instruments and electrical power could be provided.

A review of the available test sites revealed many operational difficulties; however, the selected test site has more advantageous features than any other site reviewed.

The selected test site is located in Fairfax County, Virginia, along the Scott's Run watershed just off Georgetown Pike (Route 193), about one-half mile north of the Interstate 495 interchange. The manhole access is in a park area approximately 200 yards from Route 193. The sewer line is 24-inches in diameter and has a flow variation from 0.6 to 2.2 million gallons per day. The sewer is a sanitary line; however, infiltration during heavy rains is evident.

The main advantage of this site is its close proximity to a meter vault containing a 9-inch Parshall flume which has been recently calibrated and is constantly monitored. It is planned to install the HCI flowmeter 50 feet downstream from the meter vault where access through a shallow manhole is available. Cabling can be run through the pipe to the meter vault where the instrumentation could be securely located. Power is already available at the meter vault which is enclosed by a barbed-wire fence. The site is also far enough from residential connections that blockage of the pipe can easily be made without fear of flooding basements, etc.

The main disadvantage of the proposed site is the lack of dynamic flow range. Table 2 summarizes the hydraulic characteristics of the proposed sewer line based on: 1) flow data from the existing Parshall flume; 2) a recorded pipe slope of 1.4%; and 3) a Manning friction factor of 0.013. Table 2 shows that the expected range in flow velocity is from 3.36 to 4.86 feet per second. The flow stage range is from 3.48 inches to 6.75 inches. Visual inspection during peak flow conditions indicate stage height of about 12 inches.

The proposed site is under the jurisdiction of the Fairfax County Division of Sanitation who has been most cooperative in helping HCI locate a suitable site. Other sites having more dynamic flow conditions have been inspected; however, it is proposed that the first installation be made at Scott's Run where a calibrated standard is available. If the flow measurement system proves to be successful at this site, then a second installation could be made in a more dynamic sewer line.

Blueprints of the proposed site are available for inspection at HCI. The sewer line empties into the Potomac interceptor line on the Maryland side of the Potomac River.

Table 2. Scott's Run Hydraulic Characteristics

Scott's Run Hydraulic Data --

Pipe Diameter	=	24 inches	
Pipe Slope	=	0.014	
Minimum Flow	=	0.6 million gallons/day	Data for Oct. 1971
Maximum Flow	=	2.2 million gallons/day	
Assumption for Manning Roughness Coefficient	=	0.013	

Full Pipe Flow Characteristics --

Flow Capacity = 18 million gallons/day

Flow Velocity = 8.4 ft/sec

Open Channel Characteristics --

A. Minimum Flow

1. $Q/Q_f = 0.6/18 = .0333$

2. $d/D = .145$ or stage = 3.48 inches

3. $V/V_f = 0.4$ or $V = 3.36$ ft/sec

B. Maximum Flow

1. $Q/Q_f = 2.2/18 = .122$

2. $d/D = 0.281$ stage = 6.75 inches

3. $V/V_f = 0.578$ $V = 4.86$ ft/sec

SECTION XI

FULL SCALE FLOWMETER CALIBRATION

Since the previous calibration of the strut mounted sensor blocks had left many unanswered questions, it was determined that an additional calibration was required. The Fluids Laboratory at the National Bureau of Standards was selected as the test facility. A 16-inch pipe was the flow channel to be employed. The belt assembly to be installed in the sewer site was modified and installed within a pipe section. In addition, the strut was mounted as a center chord of the pipe downstream from the belt sensors.

The details of the test plan and the data gathered are delineated in Appendix D. In addition, a new insert electrical calibration was accomplished. The electrical calibration data is presented in Appendix D.

A review of the data gathered has produced some insight to the operation of the unit and its various components. A calibration curve relating unit readout to the average stream velocity has not been included. The reason for this omission is that the amount of variation in the data results in a lack of precision of the measured water velocity. The instrument readout variation was traced and analyzed after the calibration. The first property of the belt to cause concern was the extremely low signal levels present at high water velocities. A logarithmic variation in the peak-to-peak strength at the sensor bridge was observed. A value approximating $2X10^{-6}$ °C peak-to-peak was observed during a 14 feet/second precalibration test. The observed velocity data exhibited a wide variation of flow velocity in the region of the measurement. These

observations imply that under steady flow boundary layer velocities exhibit variations which do not revolve about a constant value as previously postulated, but rather have an even distribution over a range in values. The unit as constructed was able to handle the extremely low temperature signals, but the manner of the boundary layer velocity changes do not enable the correlator circuitry to achieve a unique answer.

The instrument as configured does provide an indication of flow. If the sensor belt portion of the unit were installed in a situation in which the boundary layer of the flow was stabilized, then a repetitive indication of the flow could be attained. Additional investigations into the mechanisms controlling the flow over the heater to sensor region of flow would be required if this approach to fluid flow is to be pursued.

SECTION XII

ACKNOWLEDGMENTS

Mr. George Kirkpatrick of the Environmental Protection Agency for his technical guidance and sponsorship.

Dr. H. R. Thacker, the Environmental Protection Agency, who served as the technical project officer, for his cooperation and technical guidance.

Mr. Harry Torno of the Environmental Protection Agency for his technical guidance.

The cooperation of Dr. John Geremia from the United States Naval Academy, Mr. Ronald Humphrey from DISA Electronics, and Drs. John Olin and Leroy Fingerson from Thermo-Systems, Inc. in providing technical information relating to the hot-film anemometry.

SECTION XIII

REFERENCES

VENDOR LITERATURE

1. DISA Information No. 2 - July 1965, Issued by DISA Elektronik A/S, Herlev, Denmark.

   1-A. The Hot-Wire Anemometer at Low Air Velocities.

   1-B. The Air Jet Hot-Wire Microphone.

   1-C. Stresses and Deformations in Hot-Wire Probes

   1-D. Micromanipulative Apparatus for Delicate Hot-Wire Probe Repair

   1-E. Flush-Mounted Probes.

   1-F. A Capacitance - Type Transducer for Absolute Measurements of Displacements.

2. DISA Information No. 4 - December 1966, Issued by DISA Elektronik A/S, Herlev, Denmark.

   2-A. Time Resolution Power in Correlation Measurements with DISA Type 66A01 Hot-Wire and Hot-Film Anemometers.

   2-B. Measurement of Amplitude and Phase Characteristics.

   2-C. Application of Modulated Electromagnetic Waves for Measurement of the Frequency Response of Heat-Transfer Transducers.

   2-D. Measuring Gas-Dynamic Parameters.

   2-E. Pulsating Oil Burners.

3. DISA Information No. 5 - June 1967, Issued by DISA Elektronik A/S, Herlev, Denmark.

3-A. The Hyperbolic Response of Capacitive Transducers, and Linearizing by Means of an Electronic Circuit.

3-B. Hot-Wire Anemometer Calibration at High Subsonic Speeds.

3-C. The Air Bubble Problem in Water Flow Hot-Film Anemometry.

4. DISA Information No. 6 - February 1968, Issued by DISA Elektronik A/S, Herlev, Denmark.

4-A. Low Frequency Characteristics of Hot-Film Anemometers.

4-B. The Shock Front Curvature in a Shock Tube Measured with Hot-Wire Anemometers.

5. DISA Information No. 7 - January 1969, Issued by DISA Elektronik A/S, Herlev, Denmark.

5-A. The Measurement of Turbulent Velocity Fluctuations and Turbulent Temperature Fluctuations in the Supercritical Region by a Hot-Wire Anemometer and a "Cole" Wire Resistance Thermometer.

5-B. On Some Measurements Made by Means of a Hot Wire in a Turbulent Flow Near a Wall.

5-C. Effect of Wire Mounting System on Hot-Wire Probe Characteristics.

5-D. Pressure Transducers in Liquid-Filled Pressure Systems.

6. DISA Information No. 8 - July 1969, Issued by DISA Elektronik A/S, Herlev, Denmark.

6-A. The X Hot-Wire Probe in a Plane Flow Field.

6-B. Measurement of Air Movements in Internal Combustion Engine Cylinders.

6-C. Some Problems Concerning the Analytical Evaluation of the Characteristics of Hot-Wires Immersed in a Fluid of Variable Pressures and Temperatures.

6-D. Equipment for Traversing Anemometer Probes.

7. DISA Information No. 9 - February 1970, Issued by DISA Elektronik A/S, Herlev, Denmark.

7-A. Calibration of Probes for Flow Velocity Measurements in Liquids, in the Range 2-5 m/sec.

7-B. Calibration of a DISA Hot-Wire Anemometer and Measurements in a Circular Channel for Confirmation of the Calibration.

7-C. Error Due to Thermal Conduction Between the Sensing Wire and its Supports when Measuring Temperatures With a Wire Anemometer Used as a Resistance Thermometer.

7-D. Magnetohydrodynamic Effects on Hot-Film Measurements in Mercury.

7-E. New Trends in Hot-Film Probe Manufacturing.

8. DISA Information No. 10, October 1970, Issued by DISA Elektronik A/S, Herlev, Denmark.

8-A. Karman Vortices in Flows of Solutions of Friction-Drag-Reducing Polymers.

8-B. Amplitude Probability Analysis of Nonstationary Signals.

8-C. A Survey of Methods for Measuring Correlation Functions.

8-D. Comparison of Some Methods of Calibrating Hot-Film Probes in Water.

8-E. A contribution to the Calibration of Hot-Wire Dual Probes.

8-F. A Suitable Method for Calibration of Hot-Film Probes.

9. "Hot Wire and Hot-Film Anemometry; An Introduction to the Theory and Application of the DISA Constant-Temperature Anemometer" by C. G. Rasmussen and B. B. Madsen published by DISA Elektronik A/S, Herlev, Denmark.

10. DISA Scientific Research Equipment, Leaflet No. 2001, June 1970, Published by DISA Elektronik A/S, Herlev, Denmark.

11. DISA Probe Manual, Leaflet No. 2004, February 1970, Published by DISA Elektronik A/S, Herlev, Denmark.

12. DISA Transducer Manual, Reg. No. 9150A3211, February 1969, Published by DISA Elektronik A/S, Herlev, Denmark.

13. Hot Film and Hot-Wire Anemometry Theory and Application Bulletin TB5, Published by Thermo-Systems, Inc., Saint Paul, Minnesota.

14. Design Considerations for Hot-Film and Hot-Wire Anemometer Applications in Liquids, Published by Thermo-Systems, Inc., Saint Paul, Minnesota.

15. Constant Temperature Anemometry Theory Research Report No. 4, by Leroy M. Fingerson 11 February 1970, Published by Thermo-Systems, Inc., Saint Paul, Minnesota.

16. "Flow Instrumentation" Published by Thermo-Systems, Inc., Saint Paul, Minnesota.

17. "Heated Sensor Finds Wide Applications in Fluid Flow Measurements (Gases & Liquids)" Published by CGS/Datametrics, Watertown, Massachusetts.

18. "Fluid Flow Systems" Published by CGS/Datametrics, Watertown, Massachusetts.

19. "Probes and Sensors" (Hot-Wire and Hot-Film Anemometry), Bulletin 15P Published by CGS/Datametrics, Watertown, Massachusetts.

TECHNICAL REPORTS

20. Bellhouse, B. J., Schultz, D. L. and Karatzas, N. B., "The Measurement of Fluctuating Components of Velocity and Skin Friction with Thin-Film Heated Elements, with Application in Water, Air and Blood Flows", University of Oxford, Dept. of Engr. Science Report, Report No. 1003, February 1966.

21. Patterson, G. K., Zakin, J. L., 'Hot-Film Anemometry Measurements of Turbulence in Pipe Flow: Organic Solvents", University of Missouri at Rolla, Department of Chemical Engineering, December 1966.

22. Dreyer, G. F., "Calibration of Hot-Film Sensors in a Towing Tank and Application to Quantitative Turbulence Measurements" U. S. Naval Academy, Annapolis, Maryland, March 1967.

23. Hoff, M., "Hot-Film Anemometry Techniques in Liquid Mercury", Grumman Research Department Memorandum RM-414J, June 1968.

24. Rodrigues, J. M., Patterson, G. K., and Zakin J. L., "Effects of Probe Geometry on Turbulence Measurements in Liquids Using Hot-Film Constant Temperature Anemometry", University of Missouri-Rolla, March 1969.

25. Tanaka, D. H., "An Experimental Investigation of Turbulence at the Wall of a Pipe", U. S. Naval Academy, Anapolis, Maryland, June 1969.

26. Geremia, John O., "An Experimental Investigation of Turbulence Effects at the Solid Boundary Using Flush Mounted Hot Film Sensors", Engr. Report 70-2, United States Naval Academy, January 7, 1970.

27. Mies, R. W., "The Development of Calibration Techniques for a Flush Mounted Hot-Film Anemometer in the Study of Turbulent Boundary Layers", Trident Scholar Report, U. S. Naval Academy, 1967.

28. Lubwieg, H., "Instruments for Measuring the Wall Shearing Stress of Turbulent Boundary Layers", NACA TM 1284, 1950.

29. Liepmann, H. W., and Skinner, G. T., "Shearing Stress Measurements by Use of a Heated Element", NACA TN 3268, 1954.

30. Runstadler, P. W., Kline S. J., and Reynolds, W. C., "An Experimental Investigation of the Flow Structure of the Turbulent Boundary Layer", Stanford University Engineering Report MD-8, June 1963.

31. Kos, V. N., Yu. I. Sitnitskiy, "The Question of Measuring Average Velocity Rate in Pipes by Means of Point Type Sensors", Edited Translation by the Foreign Technology Division of the Air Force Systems Command, AD 700368, 18 September 1969.

32. Fabula, A. G., "An Experimental Study of Grid Turbulence in Dilute High-Polymer Solutions", U. S. Naval Ordnance Test Station, China Lake, California, Report TP 4225, November 1966.

33. Fingerson, L. M., Blackshear, P. L., "Heat Flux Probe for Dynamic Measurements in High Temperature Gases", University of Minnesota Report Min-2-P, May 1961.

JOURNALS

34. King, L. V., "On the Convection of Heat from Small Cylinders in a Stream of Fluid: Determination of the Convection Constants of Small Platinum Wires with Applications to Hot-Wire Anemometry", Phil. Trans. Roy. Soc., London, Ser A, Vol. 214, 1914.

35. Raichlen, F., "Some Turbulence Measurements in Water", Journal of the Engineering Mechanics Division Proceedings of the American Society of Civil Engineers, April 1967.

36. Richardson, E. V., and McQuivey, R. S., "Measurement of Turbulence in Water", Jornal of the Hydraulics Division, ASCE, Vol. 94, No. HY2, Proc. Paper 5855, March 1968.

37. Melnik, W. L., Weshe, J. R., "Advances in Hot Wire Anemometry", International Symposium on Hot-Wire Anemometry, University of Maryland, July 1968.

38. Resch, Francois, J., "Hot-Film Turbulence Measurements in Water Flow", Journal of the Hydraulics Division, Proceedings of the American Society of Civil Engineers, Vol. 96, No. HY3, March 1970.

39. Collis, D. C., Williams, M. J., "Two-Dimensional Convection from Heated Wires at Low Reynolds Numbers", Journal of Fluid Mech., Vol. 6, P357, 1959.

40. Wills, J. A. B., "The Correction of Hot-Wire Readings for Proximity to a Solid Boundary", Journal of Fluid Mechanics, P388, October 1961.

41. Champagne, F. H., Sleicher, C. A., Wehrmann, O. H., "Turbulence Measurements with Inclined Hot-Wires Part 1: Heat Transfer Experiments with Inclined Hot Wire" Journal of Fluid Mechanics, Vol. 28 Part 1, pp 153-175, 1967.

42. Symposium on Measurement in Unsteady Flow Presented at the ASME Hydraulic Division Conference Held in Worcester, Massachusetts, 1962.

    42-A. Interpretation of Data and Response of Probes in Unsteady Flow.

    42-B. Fundamentals of Hot-Wire Anemometry.

    42-C. The Constant Temperature Hot Thermistor Anemometer.

    42-D. Stable Operation of Hot-Film Probes in Water.

43. Bakewell, H. P., Lumley, J. L., "The Viscous Sublayer and Adjacent Wall Region in Turbulent Pipe Flow", Physics of Fluids, Vol. 10, No. 9, September 1967.

44. Killen, J. M., Wetzed, J. M., Almo, J. A., "Turbulence Measurements in Dilute Polymer Flows", Symposium on Turbulence Measurements in Liquids, University of Missouri, Rolla, Missouri, 1969.

45. Towsin, R. L., "Turbulence Detection, Results from the Use of an Unobstructive Technique During Ship Model Testing", Trans., INA, 1959.

46. Burns, J. A., Murphy, P. J., "A Hot-Film Anemometer Evaluation of Turbulence Stimulators", International Ship Building Progress, Vol. 12, April 1965, pp 155-169.

47. Healy, Gerald D., Jr., "Flow Measurement Techniques", Instruments and Control Systems, March 1965, p 111.

48. Benson, James M., Baker, William C, Easter, Edmone, "Thermal Mass Flowmeter", Instruments and Control Systems, February 1970, p 85.

49. Laub, John H., "Thermal Flowmeters", Control Engineering, April 1966.

50. "Paints and Protective Coatings for Wastewater Treatment Facilities", Water Pollution Control Federation Manual of Practice No. 17, 1969.

51. "Sewage Treatment Plant Design", Water Pollution Control Federation Manual of Practice No. 8, 1967.

52. "Operation of Wastewater Treatment Plants", Water Pollution Control Federation Manual of Practice No. 11, 1970.

THESIS

53. Patterson, G. P., "Turbulence Measurements in Polymer Solutions Using Hot Film Anemometry", PhD Dissertation, University of Missouri, Rolla, Missouri, 1966.

54. Hubbard, P. G., "Constant-Temperature Hot-Wire Anemometry with Application to Measurements in Water". Dept. of Mechanics and Hydraulics, Graduate College of the State University of Iowa, June 1954.

55. Ling, S. C., "Measurement of Flow Characteristics by the Hot-Film Technique", Department of Mechanics and Hydraulics, Graduate College of the State University of Iowa, June 1955.

56. Dell Osso, L., "Turbulence Measurements in Water in an Open Channel with the Hot-Film Anemometer", Dept. of Chem. Engr., Graduate College of Rice University, May 1966.

57. McQuivey, R. S., "Dissertation Turbulence in a Hydrodynamically Rough and Smooth Open Channel Flow", Colorado State University, August 1967.

TEXTBOOKS

58. Chow, Ven Te, "Open-Channel Hydraulics", McGraw Hill, 1959.

59. King, Horace Williams and Brater, Ernest F., "Handbook of Hydraulics" McGraw-Hill, Fifth Edition, 1963.

60. "Design and Construction of Sanitary and Storm Sewers", WPCF Manual of Practice No. 9, Published by Water Pollution Control Federation, October 12, 1967.

61. Hinze, J. O., "Turbulence", McGraw-Hill, 1959.

62. Streeter, Victor, L., "Handbook of Fluid Dynamics", McGraw-Hill, 1961.

63. Robertson, James M., "Hydrodynamics In Theory and Application", Prentice Hall, 1965.

64. Kreith, Frank, "Principles of Heat Transfer", International Textbook Company, 1958.

65. Giedt, Warren H., "Principles of Engineering Heat Transfer", D. Van Nostrand, 1957.

PAPERS

66. Paper No. 2-5-71 Presented at the Symposium on Flow Its Measurement and Control in Science and Industry Pittsburgh, Pa. May 10-14, 1971 "Quasi-Correlation Circuit for Thermal Pulse Time-of-Flight Flowmeter" by Ronald D. Hill and Richard D. McGunigle.

SECTION XIV
APPENDICES

		Page No.
A	List of Vendors	81
B	Drawing List	83
C	Strut Flowmeter Test at NSRDC	85
	Table 1: Flowmeter Electrical Calibration	89
	Table 2: Flowmeter Calibration	90
D	Flowmeter Test at NBS	
	Table 1: N. B. S. Calibration Data	97

SECTION XIV

APPENDIX A

LIST OF VENDORS

1 Alnor Instrument Co.
Div. Ill. Testing Labs
151 W. Hubbard St.
Chicago 10, Ill.

2 Bacharach Indicator Instr. Co.
200 North Bradock Ave.
Pittsburg 8, Penn.

3 Beckman & Whittley Inc.
973 E. San Carlos Ave.
San Carlos, California

4 Davis Instr. Mfg. Co.
709 E. 36th
Baltimore 18, Md.

5 F. W. Dwyer Mfg. Co.
P.O. Box 373V
Michigan City, Indiana

6 Electric Speed Indicator Co.
12234 Triskett Rd.
Cleveland 11, Ohio

7 Fisher Scientific Co.
244 Fisher Bldg.
Pittsburg 19, Penn.

8 Flow Corp.
205 6th St.
Cambridge 42, Mass.

9 Friez Instruments
Div. Benix Corp.
1400 Taylor Ave.
Baltimore 4, Md.

10 Henry J. Green Instr. Co.
2500 Shames Drive
Besberry, N.Y.

11 W. & L. E. Gurley
Union Street
Troy, N. Y.

12 Hasting Raydist, Inc.
Newcomb Ave.
Hampton, Virginia

13 Hill & Co.
E. Vernon
P. O. Box 189
Lake Geneva, Wisc.

14 Clark H. Joy Co.
27005 Knickerbocker Rd.
Bay Village 40, Ohio

15 Kenyon Inst. Co., Inc.
P. O. Box 355
Brewster, N. Y.

16 Koeffel & Esser
300 Adams
Hoboken, N. J. 07030

17 M. E. D. Indicators
Div. United Instr. Labs
104 W. Jefferson St.
Falls Church, Va. 22046

18 Science Assoc.
194 Nassau St.
Box 216
Princeton, N. J.

19 Taylor Inst. Co.
Amest St.
Rochester, N. Y.

20 Thermo Systems, Inc.
2418 E. Hennepin Ave.
Minneapolis 13, Minn.

21 Universal Instr. Co.
3807 Bunker Hill Rd.
Brentwood, Md.

22 Westberry Mfg. Co.
3400 Westach Way
Sonoma, California 95476

23 Wilson Products
Div. Electric Storage Battery Co.
2nd & Washington St.
Reading, Penn.

24 Baily Meter Co.
1033 Ivenhough Rd.
Cleveland 10, Ohio

25 Barton Instr. Co.
580 Monterey Pass Rd.
Monterey Park, Cal.

26 Bristel Co.
P.O. Box 1790 MBB
Waterberry 20, Conn.

27 Brook Instr. Co., Inc.
407 West Bend St.
P.O. Box MRB 9698
Hatfield, Penn.

28 F. W. Briar Mfg. Co.
P.O. 373Z
Michigan City, Indiana

29 DISA Electronics
779 Susquehanna Ave.
Franklin Lakes, N.J.
#891-9460

SECTION XIV

APPENDIX B

DRAWING LIST

E-71320002	Flow Sig. Pick-up Ass'y and Installation
C-71320003	Housing, Flow Pick-up
A-71320008	Wiring List
B-71320013	Bridge Preamp
C-71320015	Flowmeter, Sensor Electronics
E-71320017	Instrument Container Ass'y
E-71320018	Panel Ass'y
C-71320019	Door Ass'y Counter Mounting
C-71320020	Latch - Counter Support
C-71320021	PC Card (Height Gauge)
C-71320022	Bottom Cover - Mod.
C-71320023	Top Cover - Mod.
C-71320024	Bracket (Gauge and Time Code Gen. Mount)
C-71320025	Side Card Holder
B-71320026	Bracket
B-71320027	Bracket, Hinge
B-71320028	Bracket, Hinge
B-71320029	Spacer
E-71320030	Case, Power Supply
E-71320031	Instrument Case Modification
C-71320032	Mounting Plate, Power Supply
E-71320034	Power Supply Ass'y
D-71320035	Flow Meter Test Ass'y
D-71320036	Phase Shifting Circuit
D-71320040	Block Diagram, Flow Measuring Device
D-71320041	A/D Converter, Flow Measuring Device

DRAWING LIST (Cont'd)

D-71320042	Logic Diagram, Data Acquisition
C-71320043	Voltage Controlled Phase Shifter
C-71320044	Correlator
A-71320045	Cal. Curve - Height Gauge
D-1007-01-210	Plus and Minus 15 volt power supply (BL Packer)
D-1007-10-231	Plus 5 volt power supply (BL Packer)
1 00046	Water Level Gauge Model 100 (March & McBurney, Inc.)
SK-FM203	Output Multiplexer Schematic
SK-FM204	Sequence Control Schematic
SK-FM210	Phase Shifter Schematic
SK-FM211	Heater Cut-off Schematic
SK-FM212	Level and offset Adj. Schematic
SK-FM226	Multiplier Test Card Schematic
SK-FM227	SIMPLIFIED Block Diagram
SK-FM228	Analog Section Schematic
SK-FM401	Calibration Pipe Layout
SK-FM402	Sewer Belt Details

SECTION XIV

APPENDIX C

STRUT FLOWMETER TEST AT N. S. R. D. C.

PURPOSE

To subject the flowmeter sensor block and electronics to a full scale preliminary calibration, the sensor is to have a constant velocity water flow passed by the sensor. Accuracy and repeatability of the flowmeter is to be determined from these tests.

TEST PLAN

In order to provide a constant flow of water at measured accuracies of at least one percent, it is proposed to transport the flow sensor blocks through a still water basin. To accomplish this, a tow carriage at the NSRDC facility at Carderock, Maryland, is to be utilized. A strut is to be used as the mounting tool for at least two sensor blocks. The carriage is to be transported at various velocities from one to ten feet per second. A comparison of the two sensor block readings as a function of the sensor block velocity is to be accomplished. The velocity runs are to consist of ten different velocities and at least three runs at or near the various velocities are to be taken to investigate the repeatability of the flow measurements. The number of data points taken will be a function of the available time of the calibration facility. Prior to these detail data runs, at least two data runs at the extremes of the velocity range are to be accomplished to define the range of data available.

The data is to be gathered by monitoring the counter on the carriage to determine the water velocity, and the flowmeter counter to determine the sensor reading. The attached data sheet is to be utilized for the recording of all data.

CALIBRATION DATA RUNS

Data Run	Carriage Speed (ft/sec)		Sensor Reading (m sec)		Sensor No.
6	1.023		832		2
6	1.023		158		1
7	1.25		832		2
7	1.25		off scale		1
8	1.50		end of run		2
8	1.50		end of run		1
9	1.50		567		2
9	1.50		off scale		1
10	1.71		485.8		2
10	1.71		off scale		1
11	2.0		380.5		2
11	2.0		off scale		1
12	2.25		323		2
12	2.25		off scale		1
13	2.50		315		2
13	2.50		off scale		1
14	2.73		303		2
14	2.73		off scale		1
15	2.98		296.8		2
15	2.98		off scale		1
16	3.24		278		2
17	3.49		155		2
18	3.77		142		2
19	3.50		212		2
20	2.72		251		2
21	2.98		254		2
22	4.00		116		2
23	0.741		97		1

CALIBRATION DATA RUNS

Data Run	Carriage Speed (ft/sec)		Sensor Reading (m sec)		Sensor No.
24	0.51		581		1
25	2.49		284		2
26	2.98		212		2
27	3.24		173-198		2
28	1.80		**		2

* Settle to 203 settle to 198 runaway low 173 and persistent; 161 absolute

** Started run at 3.0 ft/sec slow to 1.75 ft/sec read 398, 403 and 420 at end of the run.

INSTRUMENT CALIBRATION DATA

In order to better understand the measurements obtained from this flowmeter, it was deemed necessary to calibrate the instrument with electrical signals. A signal was fed to the unit in lieu of the thermistor signals and was delayed by a calibrated amount. The output reading of the flowmeter was recorded for each phase delayed signal. Table 3 indicates a typical data calibration run.

Column 2 of Table 3 is a correction factor of -400 milliseconds which is necessary to account for the delays associated with driving the heater and the sensing offset factor of the thermistor bridge/ preamplifier combination. The -400 milliseconds value is a theoretical number which has been verified in laboratory tests.

Columns 2 and 3 have been fitted by a computer curve program and the following equation derived:

$$\begin{matrix}\text{Thermal Pulse} \\ \text{Delay (m sec)}\end{matrix} = 16.4\left(\begin{matrix}\text{meter read} \\ \text{in msec}\end{matrix}\right)^{0.433}$$

The index of determination for this equation with the aforementioned data is 0.9986.

The instruments used to acquire this data are a Ling 401AR Servo Analyzer and a Monsanto 100B counter.

SUMMARY OF TEST

A summary of the results of the flowmeter's calibration is indicated in Table 4. It should be noted in Table 4 that only a portion of the total data runs have been selected for analysis. The other test runs have not been presented for analysis due to questions regarding the test during the gathering of the other data points. For example, after some data points had been acquired, it was determined that the data readout had a persistent reading of one value for a long interval.

Table (1). Flowmeter Electrical Calibration

Input Signal Delay (m/sec)	Corrected Delay to Account for Heater Opr. (m sec)	Flowmeter Output (m sec)
502	102	65
527	127	116
556	156	190
584	184	276
612	212	361
645	245	511
661	261	591
684	284	716

Table (2). N. S. R. D. C. Calibration Test Data

Data Run (no.)	Carriage Speed (ft/sec)	Readout Counter (m/sec)	Actual Flow Thermal Wave Flow Ratio %	Thermal Wave Velocity (ft/sec)
9	1.50	576	10.7	0.161
10	1.71	485	10.4	0.174
11	2.00	380	9.75	0.193
12	2.25	323	9.30	0.209
17	3.49	155	8.40	0.294
18	3.77	142	8.12	0.306
22	4.00	116	8.20	0.328
25	2.49	248	9.60	0.238
26	2.98	212	8.50	0.254
27	3.24	181	8.45	0.274

However, with a little more settling time the readout would change to a new permanent value. After this effect had been noted, the data runs were repeated to determine the final readout value. The resultant readout numbers have been analyzed by a least squares data fit. The resultant equation provides an Index of Determination value of 0.9944, indicating an extremely good curve fitting. The resultant equation is:

$$\underset{(\text{m sec})}{\text{Delay Indicated}} = \frac{1077}{\underset{(\text{ft/sec})}{\text{Average Flow Velocity}}} - 154.6 \qquad (4)$$

In addition, the data points were plotted on a semilog plot as indicated in Figure 20. Flow velocity in feet per second is one axis while the counter readout in milliseconds is indicated on the other axis. Note that a smooth curve line is formed by the data points. The curvature of the line at the low carriage speeds is due to the electronic range of operation. An examination of Table 4 indicates that the ratio of actual flow to the measured thermal wave flow is greater than the unit was expected to encounter. This flow rate caused a change in operating range to be implemented in the field to reduce the sensing range. Since a limited time was available to check the realignment, it has been determined after the test that most of the data has been obtained in the non-linear region of the electrical calibration. In addition, one sensor did not operate in the region of 1.0 feet per second to 10.0 feet per second, but rather from 1.0 feet per second down in velocity. Therefore, the taking of double data for analysis redundancy was not possible.

After the adjustment to alter the flow velocity measurement region, there were no further adjustments or malfunctions of the equipment. An electrical calibration was performed immediately upon the return

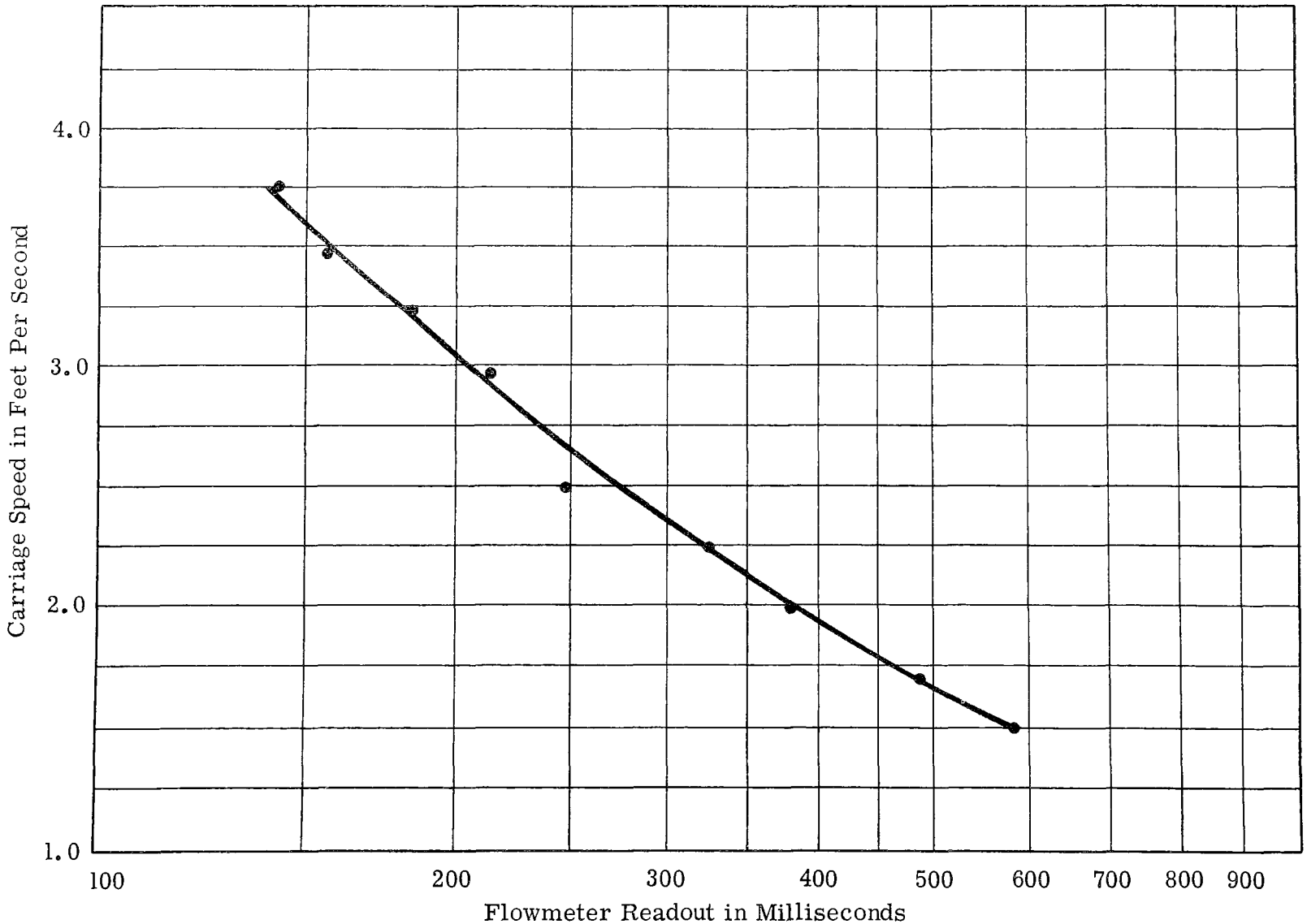

Figure 20. NSRDC CALIBRATION DATA (Sensor #2)

to the laboratory as stated in the Instrument Calibration paragraph. The laboratory tests indicate a total hysteresis and stability error range of less than 1 percent for the electronic measurement system.

The combined hydrodynamic characteristics and thermal wave measurement characteristics of the sensor block were the real purpose of this test. A few preliminary data runs indicated the strut characteristics differed with those found on the wall of a sewer pipe. To ensure the presence of turbulent flow, a strip of sandpaper was added to the front of the strut. After this addition, the thermal wave velocity, which was measured by the sensor, increased an order of magnitude indicating turbulent flow was present. Measured flow velocities indicate that the strut configuration in the velocity range to 5 feet per second presented a different flow regime environment than was to be found in a sewer pipe. The uniformity of the data indicates the sensor configuration is workable; however, the range of percentage of average flow velocity indicates that higher than expected thermal wave velocities were measured. A review of the test arrangements, however, provide an explanation of this phenomena and indicates that this test cannot be used as a judgment of the overall usability of this measurement technique. A different test technique must be employed to ensure a test which is not only accurate in its velocity calibrations, but also simulates Reynolds numbers in pipe flow which are similar to those expected in a sewer pipe. The flow characteristic change accounts for the requirement to alter the electronic sensitivity. It should be noted that during these full scale tests no problems in sensitivity were noted.

A repeat calibration is recommended with particular attention given to the hydraulics of the test. If well ordered, repeatable test data are obtained, as in this test, then the unit can be considered a feasible

flowmeter. The test results obtained also confirm the theories concerning the penetration of the thermal pulse through the boundary layers to provide a secondary measurement of the average flow velocity. The test also indicates that the sensor shape is correct in that a speed up and thinning of the boundary layers is being accomplished.

There is presently no theory at hand to explain the settling of the data to one readout number than shifting to another. No laboratory testing has been able to duplicate this condition. More testing will be required to validate theories explaining this phenomena.

SECTION XIV

APPENDIX D

FLOWMETER TEST AT NATIONAL BUREAU OF STANDARDS

PURPOSE

To subject the flowmeter sensor blocks, as configured, to measure flow in a sewer pipe, to a full scale calibration. The sensors are to have a set of constant water velocity flow conditions which cover the design range of the flowmeter. Accuracy and repeatability are to be determined from these tests.

TEST PLAN

A belt containing sensor blocks is to be mounted in a 24-inch pipe section and the pipe inserted in the National Bureau of Standards Flow Test Facility. In addition, the test strut containing two sensor blocks is to be mounted as a center chord across the pipe. A comparison of the velocity measurements of the belt sensors and the strut sensors as a function of water velocity is to be accomplished. The water velocities to be utilized will vary from 1 foot/second to 14 feet/second with a five-step calibration progressing with increasing velocity from 1 to 14 feet/second and then decreasing from 14 to 1 feet/second. At each velocity five data runs are to be gathered with a primary calibration to be accomplished by measuring the quantity of water over a specified interval. Four of the data runs will be on the belt sensors and one devoted to the strut sensors. All data is to be gathered by the automatic data recordings of the flowmeter and by manually monitoring a parallel readout device.

The nominal velocities to be investigated and their order of investigation are to be as follows: (1, 3; 7, 10; 14) feet/second. If this data appears useful, then (12, 9, 6, 4, 2) feet/second are to be investigated.

The following data are presented as the most significant of that gathered and represents a compilation of the total numbers obtained.

Table 1

N. B. S. Calibration Test Data

Run No.	N. B. S. Measured Velocity (ft/sec)	Sensor #1 Read Out (msec)	Sensor #1 °C Peak to Peak	Sensor #1 Meas. Velocity (ft/sec)	Sensor #2 Read Out (msec)	Sensor #2 °C Peak to Peak	Sensor #2 Meas. Velocity (ft/sec)
5	1.401	393	.003	.0454	535	.009	.0432
		546		.0483	534		.0432
		497		.0475	515		.0420
		386		.0453	509		.0419
		715		.0528	504		.0419
6	2.595	697	.0015	.0523	772	.007	.0461
		785		.0556	777		.0463
		770		.0540	775		.0458
		778		.0542	780		.0459
		811		.0550	777		.0458
8	4.100	957	.0012		829	.006	
		---		saturated reading	825		saturated reading
		---			821		
		---			821		
		---			817		
9	2.134	493	.002	.0474	761	.008	.0459
		509		.0477	743		.0457
		555		.0485	702		.0447
		581		.0490	658		.0441
		617		.0499	636		.0438
10	1.857	452	.003	.0467	678	.009	.0447
		571		.0488	525		.0426
		526		.0478	561		.0427
		435		.0458	635		.0438
		434		.0460	627		.0437

TEST DESCRIPTION

The data obtained by this test is indicated in Table 5. The data shown has been selected and is the best of the test runs. In addition to the average stream velocity, as determined by the National Bureau of Standards, the sensor readouts are listed, as well as the approximate temperature variation at the sensor bridge, and the calculated local stream velocities at the sensor blocks. The local sensor velocities were determined from the Sensor Readout data and the electrical calibration of the instrument as presented in Figure 21. The data for Figure 21 was obtained as in the previous calibration test by inserting an electrical signal at the sensor input to the unit and varying the phase shift while monitoring the output. All data points were taken after a five-minute stabilizing interval had elapsed.

TEST SUMMARY

A review of the data indicates a widely varying range of sensor velocity measurements. In addition, the extremely low signals indicate that some data jitter is present due to the fact that noise signals in excess of the data signals were present. A close visual observation of the wave forms indicated that hydrodynamic phenomena was inducing apparent water velocities at the sensor face that appeared to vary over a wide range of values with time. No pattern or randomness was determined during these tests but, in addition, no predominance of a given value was noted in short term observations. The lack of preponderance of a given flight time would lead to a varying output number from the processing electronics in the unit. Indeed this is the indication which was noted and it is therefore concluded that more investigation into

the water velocity variations expected, in a boundary layer of a pipe flowing as in this calibration test, is required.

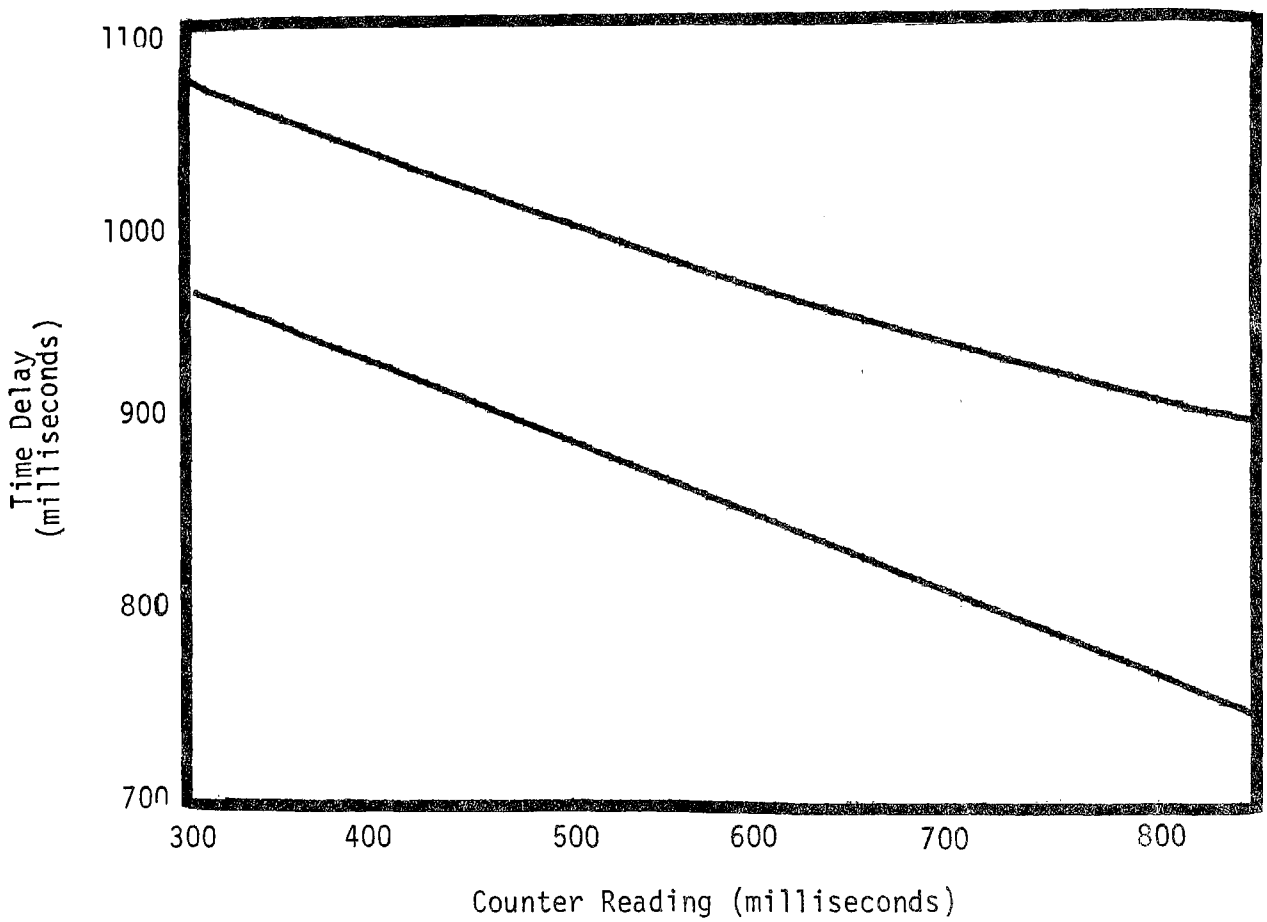

Figure 21. Electrical Calibration (Actual Time Delay vs. Reading of the Instrument).

☆U.S. GOVERNMENT PRINTING OFFICE:1973 514-

SELECTED WATER RESOURCES ABSTRACTS

INPUT TRANSACTION FORM

1. Report No.

W

"A Thermal Wave Flowmeter for Measuring Combined Sewer Flows"

5. Report Date

6.

8. Performing Organization Report No.

Robert A. Blase
Paul W. Eshleman

Hydrospace-Challenger, Inc.
2150 Fields Road
Rockville, Maryland 20850

EPA 11020 EYD

EPA 14-12-911

13. Type of Report and Period Covered

12. Sponsoring Organization Environmental Protection Agency

Contract 10/70-6/72

Environmental Protection Agency report number EPA-R2-73-145

A study of the application of thermal techniques to the measurement of flow rates in combined sewers has been conducted. The utilization of flush-mounted hot wire or hot film anemometers in a direct reading mode was extensively investigated. It was concluded that such a direct reading application was not feasible due to shifts in calibration caused by the build-up of contamination and the lack of commercially available units with sufficient ruggedness and reliability for application in a combined sewer pipe.

A particular technique, which is based upon measuring the time-of-flight of thermal pulses generated at various positions around the perinphery of the pipe, was investigated in depth. A full scale prototype unit was fabricated and tested. These tests indicated that the configuration does not provide signals which have precision to enable the measure of fluid flow with the desired accuracy.

17a. Descriptors

*Flow Measurement, *Combined Sewers, *Anemometers, *Flowmeters, Discharge Measurement, Storm Drains, Hydraulics

17b. Identifiers

*Time-of-flight, *non-invasive, correlator, integrated circuit

17c. COWRR Field & Group 07 B

18. Availability	19. Security Class. (Report)	21. No. of Pages	Send To:
	20. Security Class. (Page)	22. Price	WATER RESOURCES SCIENTIFIC INFORMATION CENTER U.S. DEPARTMENT OF THE INTERIOR WASHINGTON D.C. 20240

Abstractor Paul W. Eshleman | Hydrospace-Challenger, Inc.