EPA-670/2-73-068
September 1973

OIL RECOVERY SYSTEM USING SORBENT MATERIAL

By

Garth D. Gumtz
Thomas P. Meloy

Project 15080 HET
Program Element 1BB041

Project Officer

Kurt Jackobson
Agricultural and Spills Branch
Environmental Protection Agency
Washington, D.C. 20460

Prepared for

OFFICE OF RESEARCH AND DEVELOPMENT
U.S. ENVIRONMENTAL PROTECTION AGENCY
WASHINGTON, D.C. 20460

EPA Review Notice

This report has been reviewed by the Environmental Protection Agency and approved for publication. Approval does not signify that the contents necessarily reflect the views and policies of the Environmental Protection Agency, nor does mention of trade names or commercial products constitute endorsement or recommendation for use.

ABSTRACT

Using a combination of dimensional analysis and mathematical analysis as well as experiments, a mathematical model of oil sorbent systems has been created which describes the efficiency and capacity of virtually any oil sorbency system. Following the analytical experimental stage, a scale model system was set up and run in a wave tank; the results of which substantiate the conclusions from the analysis. Because of the low efficiency of air broadcasting of sorbents, an alternate dispersal system was built and tested.

One inch cubes of recticulated foam which rapidly saturate with oil, are readily picked up and the oil recovered from the foam sorbents. Broadcasting and systems losses are low. Capacities of 3,500 to 14,000 GHP are readily achievable at 2 knots per hour within the wave and wind conditions specified. Operating and capital costs of the system are $59,500 per year and $216,500; yielding a cost of 6¢ per gallon recovered, including depreciation. Because of the system's high practicality, simplicity, reliability and economy, it is recommended that a full scale system be built and put into service.

CONTENTS

Section		Page
I	Conclusions	1
II	Recommendations	3
III	Introduction	5
IV	Basic Sorption Properties	7
	Introduction	7
	Dimensional Analysis	9
	Particle Size and Shape	12
	Pore Size	13
	Slick Thickness	15
	Oil Viscosity and Surface Tension	18
	Sorption to Less Than Saturation	20
	Conclusions	22
V	Sorbent Broadcasting	23
	Introduction	23
	A Random Model	23
	Dimensional Analysis	26
	Laboratory Tests	27
	Broadcast Velocity	31
	Wind Velocity	34
	Sorbent Oiliness	35
	Sorbent Size and Shape	35
	Broadcast Equation	36
	Air Blown or Gausian vs Rectilinear Broadcast System	36
	Behavior of Sorbent in Slick	39
	Rectilinear Broadcast System	39
	Conclusions	40
VI	Sorbent Herding	41
	Description of System	41
	Boom Design Problems	42
	Hydrodynamics of Slick Flow in Channel	44
	Hydrodynamics of Sorbent Flow	47
	Choking of Sorbent in Channel	48
	Contact Time	48
	Oil Pickup Rate	48
	Sorbent Loss	50
	Conclusions	50
VII	Sorbent Pickup	53
	Sorbent and Oil Losses	53
	Mechanical Constraints	54

CONTENTS

Section		Page
VII	Conclusions	54
VIII	Recovery of Oil from Sorbent	55
	Introduction	55
	Sorbent Cycle	55
	Sorbent/Oil Recovery	57
	Alternatives	60
	Conclusions	61
IX	Total System Concept	63
	Introduction	63
	Systems Specifications	67
	Broadcasting	68
	Herding	74
	Pickup and Delivery to Recovery Unit	80
	Oil/Sorbent Recovery	86
	Recovery-to-Broadcast and Aft-to-Fore Transport	92
	Sorbent Selection	92
	Conclusions	96
X	Vessel Requirements	97
	Introduction	97
	Available Ships	97
	Operations	98
	Deployment of Recovery System	98
	Oil Storage	99
	Conclusions	99
XI	Preliminary Performance Estimates	101
	Introduction	101
	Gross Oil Pickup	101
	Oil Throughput	102
	Oil Type	102
	Sorbent Losses and Degradation	103
	Preliminary Cost Estimates	103
	Capital Costs	104
	Operating Costs	104
	Conclusions	105
XII	Appendices	107
	Appendix A	109
	Appendix B	157

FIGURES

No.		Page
1	Sorbent Geometry	14
2	Pore Size vs Time	16
3	Slick Thickness vs Time	17
4	Sorption Time vs Viscosity	19
5	Dimensionless Sorption Time	21
6	Percent Random Coverage vs Surface Area of Broadcast Sorbent	25
7	Blower/Injector Subsystem	32
8	Nozzle/Diffuser Subsystem	33
9	Relationship between Slick Velocity in Channel and Boom Geometry	45
10	Relationship between Oil Pile-up and Current Velocity	46
11	Pilot (¼) Scale Spilled Oil Recovery System	64
12	Sorbent Oil Recovery System Layout	70-71
13	Sorbent Broadcast System	72-73
14	Herding Boom-Support Arm Interface	76-77
15	Herding Boom-Support Arm	78-79
16	Herding Boom-Pickup Conveyor Interface	82-83
17	Sorbent Pickup Conveyor & Delivery Conveyor	84-85
18	Sorbent Pickup Conveyor Support	88-89
19	Oil/Sorbent Recovery Unit	90-91
20	Transfer Conveyor	94-95

TABLES

No.		Page
1	Sorbent Broadcast Data	28-30
2	Urethane Foam Sorbent Recycling	56
3	Oil Removal as a Function of Conveyor Belt Speed	58
4	Oil Removal as a Function of Sorbent Size for Several Oils	59
5	Oil Removal as a Function of Wringer Belt Compression	60
6	Sorption Wave Tank Test Data	65-66

SECTION I

CONCLUSIONS

Summary

It has been said that a camel is a horse designed by a committee. Air broadcast oil sorbency systems fit well that description. Through careful experimental theoretical work, we have shown that the conventional concept of air dispersal of sorbents on oil and then picking them up is not effective and in its place we have recommended an efficient and more durable system.

The System

Recommended in this report is a system which consists of a shrouded screw fed gravity drop sorbent dispersing system. The sorbent is dropped on the slick in front of the narrows of the recovery channel. Slick velocity in the channel is slowed in relation to the free stream velocity by the presence of oil and sorbents. In the channel the slick deepens and under certain conditions will build a head wave. Under certain conditions of high sorbency flow, the channel chokes resulting in sorbents and oil losses under the boom.

With proper operating and design conditions the sorbent has ample time to absorb the oil slick and is readily recovered by a wire mesh belt lifting the oil saturated sorbent to the deck of the ship. Very little oil passes through the recovery system back onto open water.

Once onboard the oil is recovered from the sorbents by passing the oil saturated sorbent cubes between two belts through rollers. After recovering 75% of the oil from the sorbent, the reuseable sorbent is transported forward and rebroadcast on the slick. The chunky reticulated foam particles can be used repeatedly without appreciable degradation.

Conclusions

In the study the following conclusions were reached:

(1) For durability and efficacy, 1 inch cubes are a very effective size.

(2) Plate-like foam particles are less effective.

(3) Air broadcast nozzles give non uniform distribution of sorbent, air broadcast particles are subject to wind velocity and gusting scatter, and the system has inherently high losses.

(4) A shrouded rectilinear screw fed distribution system eliminates all of the problems mentioned in number 3, above.

(5) Foam particles rapidly saturate with oil and sorption time is usually not a problem.

(6) A four-to-one compression of the slick by an angled boom is desirable.

(7) Bridging or choking can occur in the channel under improper operating conditions.

(8) Oil recovery works well with a dual belt wringer system.

(9) Capacity of 3500 to 14000 gallons per hour can readily be achieved with no. 4 fuel oil and marine diesel fuel oil.

(10) Proposed design will work effectively with a variety of sorbent material and shapes.

(11) Commercial polyurethane foam - ester-type - with 100 pores per linear inch, cut in one inch cubes is suggested with 20 PPI foam as an option for heavier oils.

(12) Wave action does not materially alter system behavior.

(13) Oil-sorbent-system ship requirements are met by a number of ships in the private and public domain.

(14) Capital and operating costs of the system are respectively, $216,500 and $59,500 per year.

(15) Recovery cost including capital depreciation are 6¢ per gallon.

(16) Salvage value of recovered oil could actually pay for capital and operating costs of the system depending on spill frequency and spill thickness.

SECTION II

RECOMMENDATIONS

Initially the authors undertook this project with a strong conviction that a sorbency recovery system was both infeasible and uneconomical. It was believed the high loss rates and long sorbency times would preclude this system ever being designed effectively. The proposal was designed so that the systems analysis would preclude money being spent for full scale system.

While initial studies on sorbency rates were encouraging the definitive work on air broadcasting of sorbents showed that uniform coverage would be poor and loss rates high. The invention of the shrouded-rectilinear-screw-fed-distribution-system eliminated the pessimism on the feasibility of the sorbency oil recovery system. It now can be said unequivocally that the system is economical and technically feasible.

It is recommended that:

(1) The full scale system proposed in this report be designed, built and field operated.

(2) The approach delineated in this report be advertised through papers, presentations and other information channels to the oil industry as a cost effective as well as technically effective method of recovering of oil in thin slicks. The system delineated in this paper shows not only will it be cheaper than straw for oil recovery, but far cheaper than straw as a system.

SECTION III

INTRODUCTION

Spillage of oil on estuarian and marine waters has become an international problem. Standard operating procedures, to date, call for dumping straw on the slick and subsequently recovering the oil/straw sludge. Subsequent disposal problems of the straw sludge as well as the vast quantity of straw used has raised the question of the possibility of using recyclable sorbents. Furthermore, slicks often become quite thin before recovery operations can be mounted. Conventional methods such as skimmers and straw are ineffective on these thin slicks.

This study was made to determine if it was possible to design and operate an oil recovery system which broadcast oil absorbent, subsequently collected the sorbent, recovered the oil and reused the sorbent. This study indicates that such a system is feasible but not in the manner originally conceived.

The main parameters to be considered in such a study are:

(1) Is the sorbency absorption rate great enough to pick up the oil in the time the sorbent is on the slick?

(2) Can the sorbent be broadcast onto the slick with a uniform pattern without suffering prohibitive losses?

(3) Can the slick with the sorbent in it be compressed and herded to a pickup channel without undue loss of either sorbent or oil?

(4) Can the sorbent-oil complex be recovered from the surface of the sea without undue loss of either oil or sorbent?

(5) Once recovered, can the oil be recovered from the sorbent in sufficient quantity to make the system practical? Further, does the sorbent have a sufficient lifetime in recycling through the recovery system to make it economically feasible when compared to the standard sorbent - straw?

The method of approach in each of the areas was to set up a dimensional analysis of the system and then run experiments to fill in the system parameters. This approach was successful and has resulted in the development of a number of equations that describe various operations in the oil-sorbent system over a wide range of variables and operating conditions. These tests were run in small to large containers and the system was proof tested in a wave tank.

In the following sections, the experiments and dimensional analysis techniques are delineated.

SECTION IV

BASIC SORPTION PROPERTIES

For an engineering study, the characteristics of a process material must be specified so as to avoid major errors in the design of a full scale system. In a scientific study, these characteristics would themselves be of primary importance; here, however, the final system is the primary aim, and, therefore, a semiquantitative or qualitative grasp of sorption characteristics can be entirely sufficent. Most sorbent properties were characterized in a quantitative fashion during the study, but, after completion of the wave tank tests, semiquantitative or qualitative relations were sought for reasons described in detail later on in this report. Basically, factors peculiar to the system as a whole (as compared to the sorbent as a distinct entity) were found to be of such overwhelming importance that extreme care in defining sorbent properties became wasteful.

Introduction

A considerable abundance of physical properties serve to describe the sorption process, even in an extremely simplified situation. If we consider a single sorbent particle placed onto a quiescent oil slick of infinite extent, the sorption process would seem ideal enough to permit "complete" description. Even here, however, the following relatively large family of parameters must be considered:

t = the time over which sorption has occurred

t_s = the time necessary for the sorbent particle to saturate with oil

Γ = the fraction of the saturated oil volume or mass sorbed at time t

V = the bulk volume of the sorbent particle or one of the factors characterizing shape as illustrated with the data presented below

C = the wetted perimeter of the sorbent particle or the second factor which characterizes shape

d = the average pore diameter of the sorbent foam (note that in the form $1/d$ this parameter represents the average pores per unit length, a parameter commonly in use in the foam production industry)

ε = the void fraction for the sorbent foam

η = the fraction of the sorbent void which is open celled

g = the acceleration due to gravity

l = slick thickness

μ_o = oil viscosity

σ_o = oil/air interfacial surface tension

ρ_o = oil density

θ_o = contact angle between oil and sorbent matrix

θ_{ow} = oil/water interfacial surface tension

μ_w = water viscosity

σ_w = water/air interfacial surface tension

ρ_w = water density

θ_w = contact angle between water and sorbent matrix

T = temperature of the entire system

Now, this set of parameters, although 20 in number, does, indeed represent an ideal or much simplified system. No attempt has been made (in this particular development, not in the study as a whole) to include the effects wind, waves or particle-particle interactions on the sorption process. Obviously, effects of oil aging (e.g., the formation of oil/water dispersions and the infall of particulates on a slick), velocity of impact of sorbent particles on a slick, buffeting of sorbent by herding boom and conveyor pickup, and reuse of sorbent are also not included in this analysis. Careful consideration of an entire sorbent oil recovery system, indicates that there are many more variables which are not being accounted for in the present analysis. The

above approach does, however, account for essentially all the relevant materials parameters (not what may be called the systems parameters or those conditions imposed on the materials by the environment within which they operate in a particular instance). This development will, therefore, provide only indications of the effect and importance of the various materials parameters for the system (general approach) under investigation.

Dimensional Analysis

Recognizing that temperature may be expressed in units of kT where k is Boltzmann's constant and is, therefore, a measure of energy, the 20 parameters of the previous section can be expressed in terms of 3 basic dimensions (mass, length, and time). There are, therefore, 17 dimensionless parameters which describe the system in question. This is far too many to be tractable in an engineering study of limited scope. Three rationales may be used in reducing the number of parameters which have to be considered in this study.

First, implicit dependence is apparent for the various materials properties on temperature; that is, if the 19 other parameters are functions of temperature and are given quantitatively at a specific temperature, then no explicit dependence is needed for temperature in the dimensional analysis. 19 parameters, therefore, remain.

Second, certain parameters may effectively and practically be considered as constants. The void fraction or porosity (inherently a dimensionless number) will be very close to one for most foam materials of interest, and, furthermore, if a family of sorbents is selected which is geometrically similar, ε is a constant by definition. A similar argument can be made for η, the open cell fraction of the voids; furthermore, η should be set at a value of one (for maximum oil pickup capacity) unless unforeseen factors mitigate drastically against same. The contact angles (θ_o and θ_w) as expressed in radians (a dimensionless format) can also be assumed to be constant for "normal" oil/water systems. Since economic considerations demand that the sorbent foam be reused, the sorbent should be prewetted with oil, and, therefore, $\theta_o=\pi$ and $\theta_w=0$. Other parameters in the main set may also be considered as constants, but this is better done in light of the discussion in the following paragraph. With the above 4 parameters set constant, 15 remain for consideration in the dimensional analysis.

Third, certain of the remaining parameters may be judged to produce only second-order effects on the sorption process. For instance, the relative effect due to the viscosity of water should be small since 1) the oil is the material which undergoes a primary bulk motion and is sorbed and 2) the viscosity of water is a constant and can eventually be combined with other constant factors (set parameters) resulting in a dimensionless parameter which is itself a constant. Changes of viscosity due to temperature are much less critical for water than for oils (although of the same general form); since the effect of water viscosity is second-order, the effect of temperature on this parameter is of third-order and, therefore, of little concern. Densities for both water and oils are little different in a fairly general sense and are somewhat weak functions of temperature in the range of interest (0 to 40°C). Therefore, the domensionless parameter ρ_w/ρ_o can be reasonably postulated to have little effect on the sorption phenomena realizing that, even for an entirely gravitational (Froude) effect, the geometry of a slick due to thinning around a sorbent particle and the effect of oil viscosity on flow to a particle are overriding. Likewise, surface tensions are 1) relatively weak functions of temperature, 2) essentially constant for water, and 3) are of the same general magnitude for oils of a "similar" nature (see the section below on viscosity and surface effects; this is the case for both σ_o and σ_{ow}). Therefore, in the light of previous considerations, the sorption process may be assumed to be a relatively weak function of both the surface behavior of the supporting water phase (σ_w or σ_w/σ_o) and the interaction of the oil and water phases (σ_{ow} or σ_{ow}/σ_o). In this paragraph 4 parameters (μ_w, ρ_w, σ_w and σ_{ow}) have been shown to be of secondary consequence to the sorption process; 11 important parameters remain for inclusion in the following dimensional analysis.

Since the 11 parameters are expressed in terms of 3 basic dimensions, a set of 8 dimensional parameters will serve to describe the sorption process. The following set was selected (and eventually modified) for study:

$$\Gamma, \frac{t}{t_s}, \frac{gt_s^2}{C}, \frac{C}{l}, \frac{C^3}{V}, \frac{d}{l}, \frac{\mu_o^2}{\rho_o^2 d^3 g}, \frac{\sigma_o}{gd^2 \rho_o}$$

Still assuming an implicit temperature dependence, the following dimensionless parameters must be kept in mind as possibly effecting the sorption phenomena if they deviate substantially from the assumptions posited above:

$$\varepsilon,\ \eta,\ \theta_o,\ \theta_w,\ \frac{\sigma_{ow}}{\sigma_o},\ \frac{\mu_w}{\mu_o},\ \frac{\sigma_w}{\sigma_o},\ \frac{\rho_w}{\rho_o}.$$

Now, among the 8 dimensionless parameters relevant to this study Γ goes from 0 to 1.0 as t/t_s does the same. That is, Γ, the dependent variable, depends on t/t_s, an independent variable, within a closed (finite) space whose extent is determined entirely by the magnitude of t_s. Since modeling of the dependence of Γ on t/t_s is relatively straightforward (as a two stage process: 1) sinking of the sorbent into an infinitely thick slick followed by 2) transfer of oil from a slick of infinite extent but finite thickness to the sorbent "sink"), basic engineering laboratory studies may just involve determining the dependence of gt_s^2/C on the remaining independent dimensionless variables.

In general, the following functional relationship is to be determined experimentally,

$$\Gamma = f\left(\frac{t}{t_s},\ \frac{gt_s^2}{C},\ \frac{C}{l},\ \frac{C^3}{V},\ \frac{d}{l},\ \frac{\mu_o^2}{\rho_o^2 d^3 g},\ \frac{\sigma_o}{gd^2\rho_o}\right),$$

but, based on the assertions of the previous paragraph, of primary, initial importance is determination of the functional relationship,

$$\frac{gt_s^2}{C} = h\left(\frac{C}{l},\ \frac{C^3}{V},\ \frac{d}{l},\ \frac{\mu_o^2}{\rho_o^2 d^3 g},\ \frac{\sigma_o}{gd^2\rho_o}\right).$$

Classically in engineering studies, such a functional relation is assumed to be separable into power relations for the various independent parameters, or

$$\frac{gt_s^2}{C} = B\left(\frac{C}{l}\right)^{a_1}\left(\frac{C^3}{V}\right)^{a_2}\left(\frac{d}{l}\right)^{a_3}\left(\frac{\mu_o^2}{\rho_o^2 d^3 g}\right)^{a_4}\left(\frac{\sigma_o}{gd^2\rho_o}\right)^{a_5}$$

That separability is an assumption must be kept in mind since the general equation implies that the superscripts in the separated equation may be functions of the independent variables; experiment or appropriate modeling may determine such functional relationships.

Particle Size and Shape

Characterization of particles, given the present state of the art, is best done as related to particle use. Size and shape are abstract concepts, not amenable to quantification in a general sense. Fundamentally, the use of particles to sorb oil involves two critical factors related to particle geometry: oil sorption capacity and transfer of oil from slick to particle. Given these factors, the following postulates account for the effects of size and shape. First, sorption capacity relates directly to the volume of the sorbent particle (more exactly to $\eta \varepsilon V$) that is, for the purpose of oil sorption V may be considered as analogous to particle size. Second, transfer of oil from slick to particle depends (especially for the case of a relatively thin slick) on the wetted perimeter available for movement of oil into the sorbent; therefore, C may be used as a measure of shape for the process. Note, however, that other parameters may also be important in characterizing particle shape. For example, the area of the particle which initially contacts the slick may relate to the initial stage of the sorption process while the height of the particle could be important in describing buoyancy effects; however, for an engineering study of a limited number of sorbent configurations, use of V and C should be adequate which can, of course, be checked to a limited degree by experiment. The possibility must be kept in mind that, in particular situations, V and C may not be sufficient to describe sorbent geometry particle as related to the sorption phenomena; the following pages illustrate that for the purposes of this study, however, these two parameters are adequate.

The plot on the following page summarizes the results of more than 100 sorption tests. Sorbent particles (fully reticulated polyurethane foam with 100 pores per inch) were dropped onto a 1.5 millimeter slick of No. 4 fuel oil in a 10 foot diameter tank. For the basic sorption tests (preoiled sorbent), 6 different sorbent sizes and shapes were used; considering the averaged data points on the plot from left to right along the abscissa, the geometries were:

(1) 1/2 x 1/2 x 1/2 inch rectangular parallelpipeds

(2) 4 x 1/2 x 1/2 inch rectangular parallelpipeds

(3) 1 x 1 x 1/2 inch rectangular parallelpipeds

(4) 1 x 1 x 1 inch rectangular parallelpipeds

(5) 2 x 2 x 1/2 inch rectangular parallelpipeds

(6) 2 x 2 x 1 inch rectangular parallelpipeds

The form of the relation between reduced saturation time and reduced sorbent geometry was determined by performing repetitive least squares fits on the two dimensionless parameters in a log-log format; the curve fit pertains to only 5 of the data collections. The second sorbent geometry above (or the blackened circle on the plot) was not considered in the curve fitting procedure but is plotted for the purpose of comparison to the data which was. This comparison is very good (in fact, excellent when the geometry of the 4 x 1/2 x 1/2 inch strands is compared to the blocky nature of the other five sorbent geometries).

Figure 1 illustrates the following relation for saturation time as a function of sorbent geometry,

$$\frac{gt_s^2}{C} = D\left(\frac{C}{l}\right)^{7.35} \left(\frac{C^3}{V}\right)^{-3.56}$$

where D is a constant whose value depends on all the systems parameters other than geometry. Note that saturation time depends approximately on the inverse of the wetted perimeter; this agrees well with the mass transfer postulate made above. However, saturation time does not vary in direct proportion to the volume of the sorbent particle as might have been expected; the variation is with the 1.78 power of the volume instead. Several factors probably account for the added volume dependence: 1) the length through which oil must move into a particle by capillary flow effects the rate of the sorption process, 2) the buoyancy or rate of settling into the oil/water system depends on the height of the particle, and 3) (especially for relatively thick slicks and small particles) the initial area of contact between the particle and the slick should be of importance. Since parameters related to these three effects are significantly different only for the 4 x 1/2 x 1/2 inch strands and since the experimental results for the strands compare very favorably with prediction, the conclusion must be that for the purposes of an engineering study the reduced sorbent geometry dependence as illustrated in Figure 1 is adequate.

Pore Size

Although of possible operational importance, pore size is

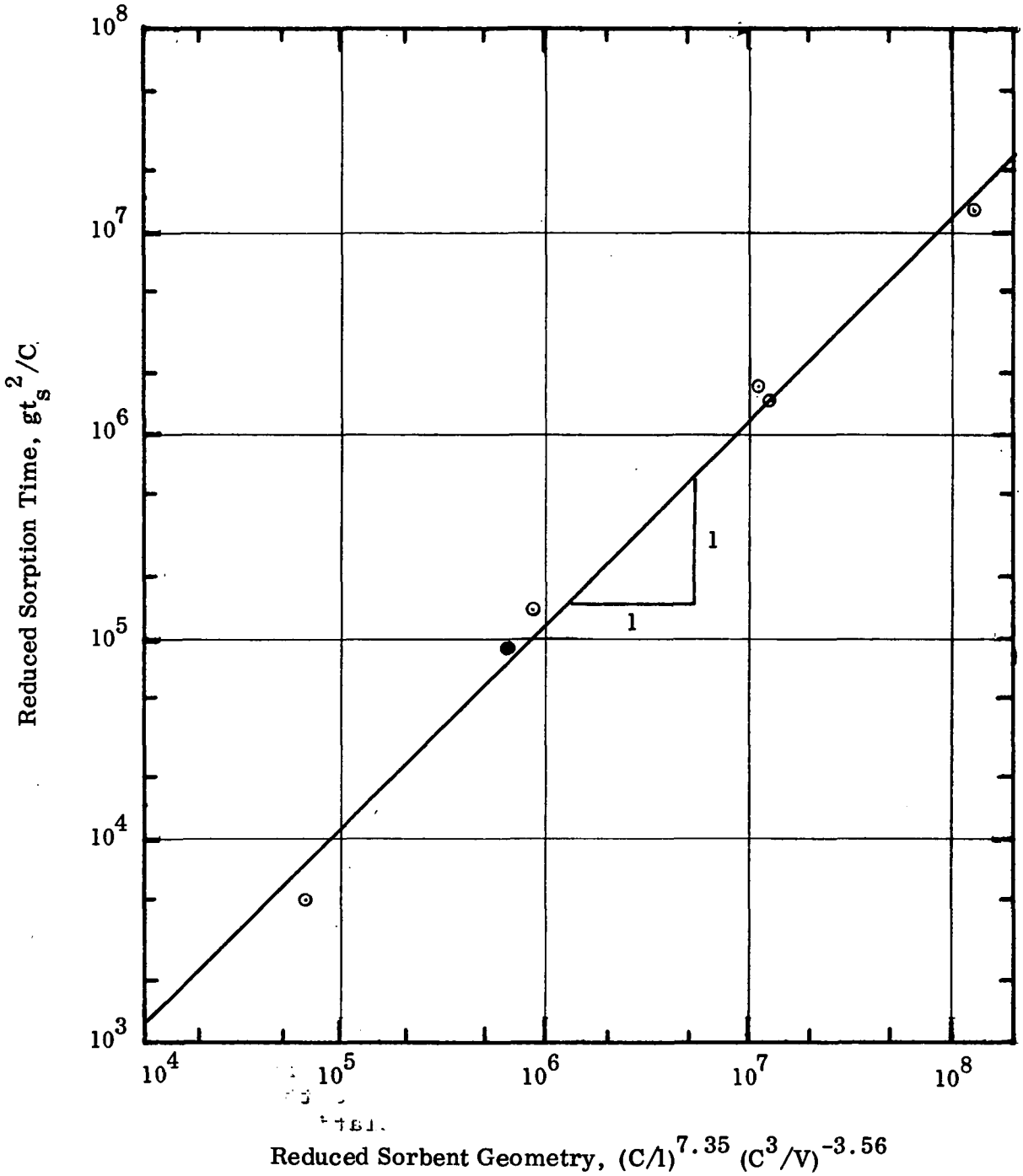
10^8
10^7
10^6
10^5
10^4
10^3
Reduced Sorption Time, gt_s^2/C
1
1
10^4
10^5
10^6
10^7
10^8
Reduced Sorbent Geometry, $(C/l)^{7.35}\ (C^3/V)^{-3.56}$

Figure 1

not a very crucial parameter in the sorption process. Figure 2 is a log-log plot of reduced sorption time (to saturation) versus reduced pore size in which the former parameter includes an "abstracting out" of the effects of sorbent particle size and shape. The dependence of saturation time on pore size is relatively weak. The form of this dependence (according to a least squares fit) is as follows,

$$(g/C)^{1/2}(C^3V)^{1.78}(C/l)^{-3.68}t_s = E\ (d/l)^{-0.337}$$

where E is a constant whose value depends on all the systems parameters other than sorbent geometry and pore size. The fractional power dependence can be explained as a consequence of 1) sorption dependence on factors other than capillary flow of oil within the sorbent and 2) an actual net like structure of the sorbent as opposed to capillaries.

Slick Thickness

Oil sorption depends critically upon the thickness of the slick upon which it occurs. Figure 3 summarizes the results of a large number of sorption tests with slicks of varying thickness. Reduced sorption time has been defined for the purposes of this plot so as to "abstract out" the effects of particle size, shape and pore size. The plot recognizes the fact that, slick as thickness becomes very large, sorption dependence on thickness disappears; that is, the sorbent behaves as if the slick were infinitely thick. The data bears out this fact very well. Note the steeply sloped straight line on the plot whose dependence on l cancels out the thickness dependence of the reduced sorption time (see the ordinate). There are obviously two regions of interest for the phenomena of sorption: zones in which 1) dependence on slick thickness is severe (the horizontal line on the left hand size of Figure 3) and 2) the sorbent interacts with the slick as if it were infinite (the line with a 3.34 slope on the right of the Figure). Note that a least squares fit to the five points on the left of Figure 3 leads to the relation illustrated by the broken line; there is, however, enough scatter in the data to make the horizontal approximation sufficient for the purposes of an engineering study. The functional equation for the sorption time now takes the form,

$$\left(\frac{l}{d}\right)^{3.34}(g/C)^{1/2}(C^3/V)^{1.78}(C/d)^{-3.68}t_s = F\left(\frac{\mu_o^2}{\rho_o^2 l^3 g}\right)^{m_1}\left(\frac{\sigma_o}{g l^2 \rho_o}\right)^{m_2}$$

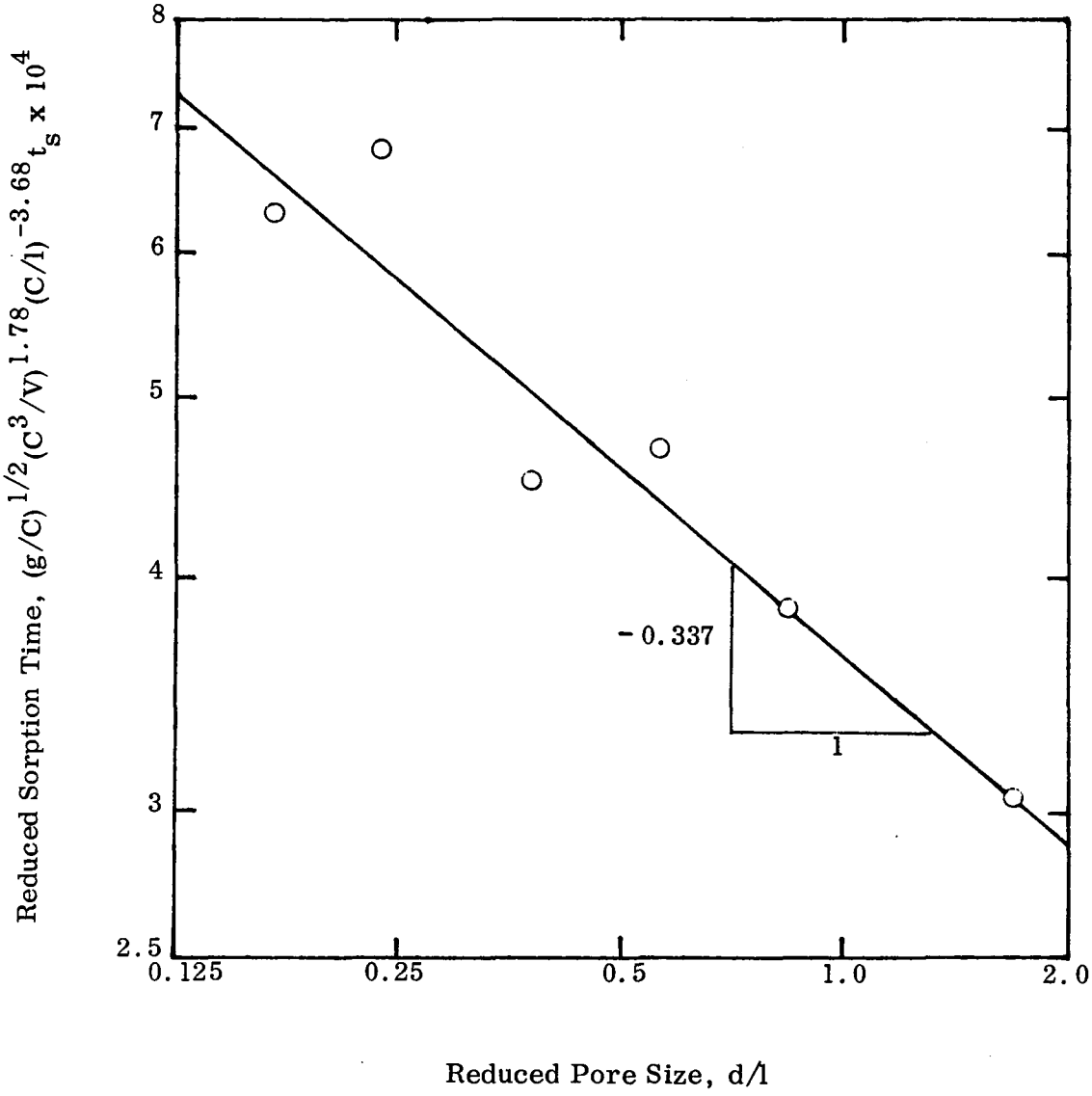
Reduced Sorption Time, $(g/C)^{1/2}(C^3/V)^{1.78}(C/l)^{-3.68}t_s \times 10^4$
8
7
6
5
4
3
2.5
0.125
0.25
0.5
1.0
2.0
- 0.337
1
Reduced Pore Size, d/l

Figure 2

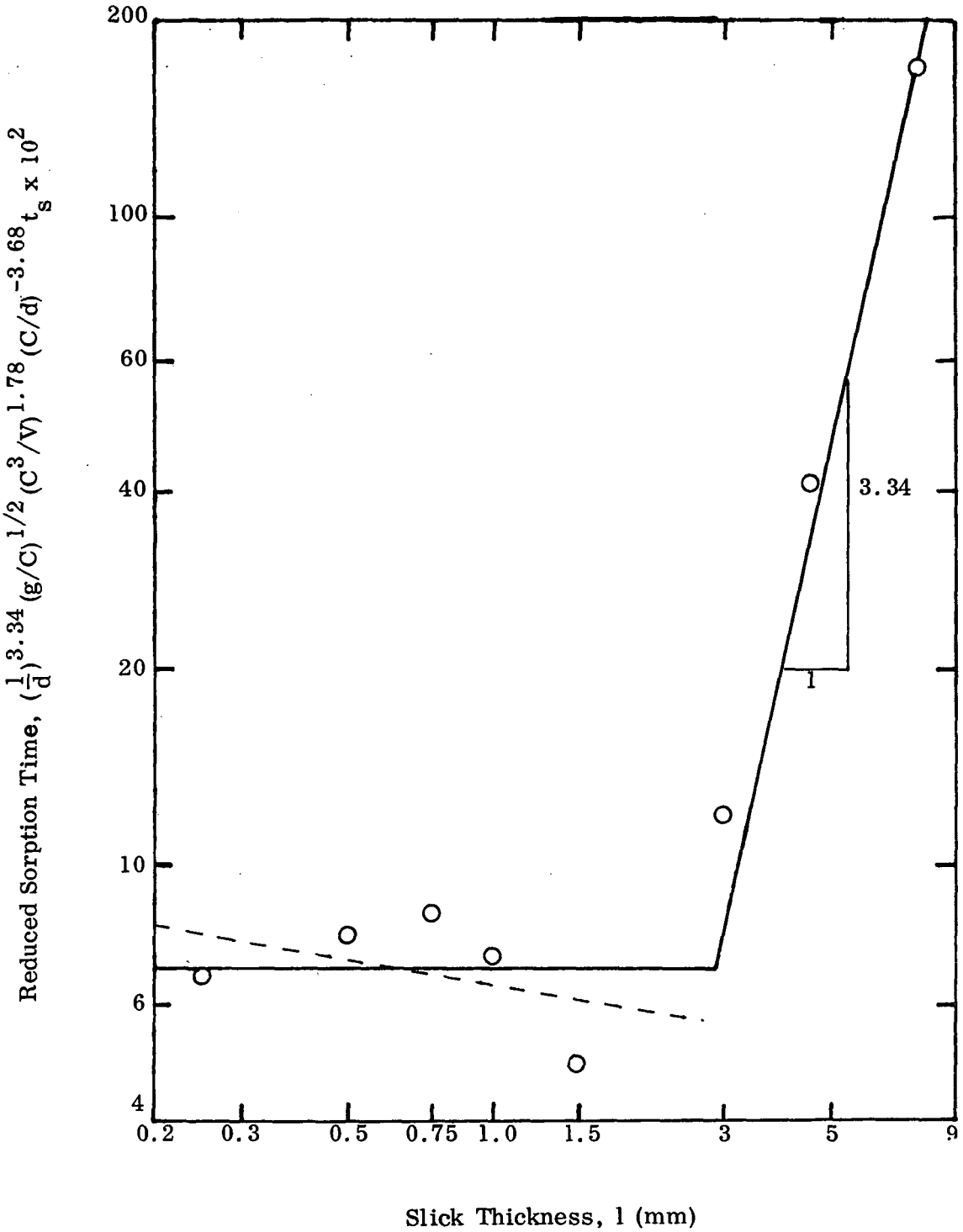
Reduced Sorption Time, $(\frac{1}{d})^{3.34}(g/C)^{1/2}(C^3/V)^{1.78}(C/d)^{-3.68}t_s \times 10^2$
200
100
60
40
20
10
6
4
3.34
1
0.2
0.3
0.5
0.75
1.0
1.5
3
5
9
Slick Thickness, l (mm)

Figure 3

where F is a constant and where for a sufficiently thick slick $-3m_1-2m_2=3.34$ and for a sufficiently thin slick $3m_1= -2m_2$. What constitutes sufficiently thin and thick slicks will be quantified in the next section; suffice it to say here that something like 3 millimeters for the conditions of Figure 3 is a critical slick thickness.

Oil Viscosity and Surface Tension

From fluid mechanics (see any basic text) sorption or flow rate is known to vary inversely with Newtonian viscosity for both capillary and sheet flow; sorption time should, therefore, vary in direct proportion to viscosity. Admittedly, oils are, in general, not Newtonian liquids; for the purposes of an engineering study, however, they may reasonably be assumed Newtonian. Figure 4 is a plot of reduced sorption time versus reduced viscosity; note that the reduced viscosity is expressed in terms of pore size, as opposed to slick thickness, in this plot. The direct proportionality between sorption time and viscosity is good although a least squares fit would give a log-log proportionality slightly different than one.

Given the results of the previous section and paragraph, the equation describing the sorption process to saturation becomes

$$\left(\frac{g}{c}\right)^{1/2} t_s = F_\sigma \left(\frac{d}{l}\right)^{3.34} \left(\frac{c}{d}\right)^{3.68} \left(\frac{c^3}{V}\right)^{-1.78} \left(\frac{\mu_o^2}{\rho_o^2 l^3 g}\right)^{0.50} \left(\frac{\rho_o l^2 g}{\sigma_o}\right)^{0.75+1.67\sigma}$$

where

$$\sigma = 0 \text{ when } \gamma < 0.329$$

and

$$\sigma = 1, \quad F_1 = F_o \left(\frac{\sigma_o}{g l_c^2 \rho_o}\right)^{1.67} \quad \text{when } \gamma > 0.329$$

for

$$\gamma = \left(\frac{\mu_o^2}{\rho_o^2 l^3 g}\right)^{0.50} \left(\frac{g l^2 \rho_o}{\sigma_o}\right)^{2.42} \quad \text{and } \gamma(l_c) = 0.329$$

and $F_o = 3.77 \times 10^6$

This value for F_o was obtained from the extensive data gathered during the studies of the effects of sorbent size

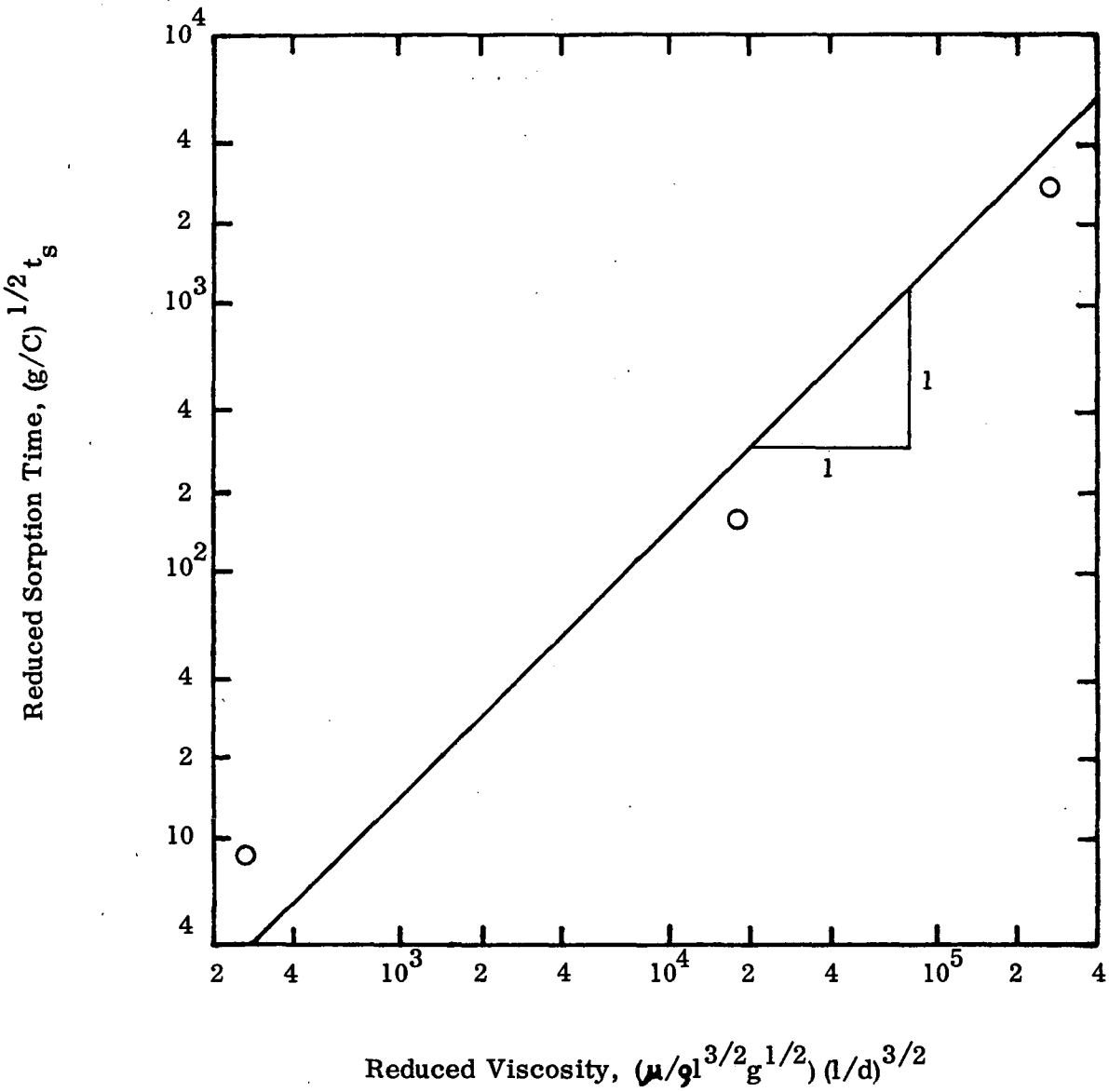
Reduced Sorption Time, $(g/C)^{1/2} t_s$
10^4
4
2
10^3
4
2
10^2
4
2
10
4
1
1
2
4
10^3
2
4
10^4
2
4
10^5
2
4
Reduced Viscosity, $(\mu/\rho l^{3/2} g^{1/2})(l/d)^{3/2}$

Figure 4

and shape and is, therefore, representative of very realistic calm water conditions. The relation for sorption saturation time is relatively complete and can be used as a base for estimates under other than calm water conditions given that enough data is available to allow a reestimate of F_o.

Sorption To Less Than Saturation

Less than sorption to saturation has been discussed previously. Sorption in this more general sense can be modeled by postulating a two stage process with the condition that only preoiled sorbent be considered. The latter condition is consistent with the economics for using artificially produced sorbent materials; that is, since these sorbents (e.g., polyurethane) must be used many times (on the order of one hundred) to successfully compete with straw, the vast majority of particles sorbing oil within a steady state system will have been effectively preoiled. The two stage process is as follows:

1) Initial sorption through the thickness of the slick at a rate equivalent to that estimated for an infinitely thick slick. The figure on the following page illustrates this stage which takes place up to a time t*. The total saturation times(both for an infinitely thick slick, $t_s(1\rightarrow\infty)$, and for the slick of interest, $t_s(1)$ are determined using the relation presented in the previous section. t* is obtained as the 1A/V fraction of the saturation time for an infinitely thick slick. The reduced sorption, $\Gamma=v(t)/V$, is a function of the reduced sorption time, t/t_s, where v(t) is the volume of oil sorbed at time t; note that v(t*) is estimated as 1A where A is the area of approach of the sorbent particle to the slick.

2) The final step in the sorption process involves mass transfer of oil from the slick proper to the sorbent particle. This stage is modeled simply by making a linear interpolation between the point [t*, Γ(t*)] and [1.00, 1.00] on a plot such as that in Figure 5.

Figure 5 contains two examples of typical sorption curves. Curve A is for a relatively large sorbent particle in a relatively thin slick; such a system is more typical for the design approach as conceived in this study. Curve B is typical of a very thin sorbent particle or of a relatively thick slick of a very low viscosity oil; such conditions cannot be deemed realistic from a design standpoint although they could, of course, occur as an extreme. Note that

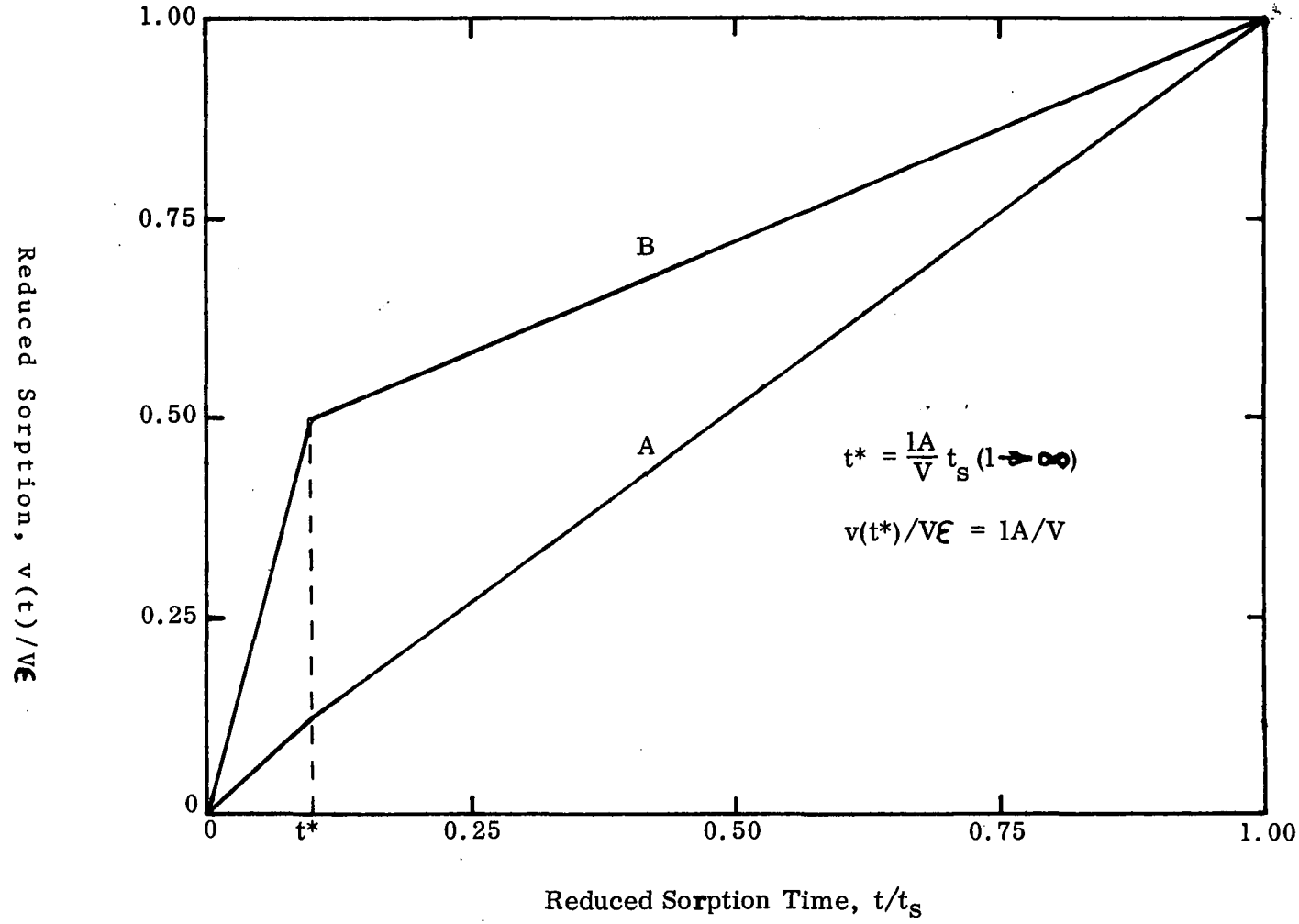
1.00
0.75
0.50
0.25
0
B
A
$t^* = \frac{lA}{V} t_s \; (l \to \infty)$
$v(t^*)/V\epsilon = lA/V$
0
t*
0.25
0.50
0.75
1.00
Reduced Sorption, $v(t)/V\epsilon$
Reduced Sorption Time, t/t_s

Figure 5

although curve B would superficially appear to represent a sorption process more favorable than that of curve A, this is not necessarily the case. First, since the curves refer to relative fractions of oil sorption, actual oil sorption must still be determined or estimated. Second, factors attendant to sorbent broadcasting, harvesting, recovery and transport may weigh against selecting a sorbent with a more favorable relative oil sorption rate.

Conclusions

A very complete description of the sorption of oil by polyurethane (ester-type) foams has been developed. Due to the importance of other design factors, however, this model cannot be used entirely on its own to specify an optimum sorbent.

SECTION V

SORBENT BROADCASTING

Introduction

As will be shown below, a random model of the broadcasting of sorbent particles points to severe problems with a real coverage. That is, large excesses (over and above the theoretically ideal quantity) of sorbent must be broadcast to effectively contact and, therefore, sorb oil. Under conditions of randomly broadcasting small sorbent particles onto a large slick with no sorbent losses, the fraction of the area effectively contacted (Ψ) is given as $1 - 10^{-z \log 2}$ where z is the fraction of the ideal amount of sorbent broadcast. According to this relation 99% effective coverage necessitates the use of about 6.5 times the ideal amount of sorbent; obviously, any technique approaching that of random broadcasting should not be used.

A more ordered approach to the broadcasting of sorbent materials is required. Sorbent can be broadcast to more accurately cover a slick in many ways. Ideally, each sorbent particle should be carefully placed in a predetermined spot in a slick so that maximum sorption occurs; in terms of system complexity, this approach must be ruled out. Note that oil sorbing belts provide such exact placement of sorbent material. Another technique for sorbent placement is directing a stream of sorbent onto the surface of a slick. This particular approach was subjected to a great deal of attention throughout the course of the study being discussed here.

The results of any conclusions from studies on air conveying and broadcasting of sorbents from nozzles are presented in the following paragraphs. Combined with the results of the sorption studies and hydrodynamic testing, these results and conclusions led to the broadcasting subsystem as presented in the preliminary design section of this report (Section IX).

A Random Model

The broadcasting subsystem presents some inherent difficulties as regards sorption efficiency. Obviously, sorbent losses may occur during a broadcasting operation. Furthermore, broadcasting, since it is by nature a relatively uncontrollable operation, will result in a significant "piling up" of sorbent material; in the case of absorption

this would hinder the oil recovery whereas for adsorption (the mechanical occlusion of oil) it may help. Note, however, that even for the mechanical interaction of sorbent material (the corralling effect) a random model still has import; that is, it is quite possible that a significant amount of the randomly broadcast material will result in a deposition pattern where the necessary interaction is not at all probable. Either way, broadcasting is a process which lends itself quite readily to mathematical modeling, the subject of the following paragraphs.

Consider the deposition of "n" sorbent units randomly onto an area which "N" sorbent units could effectively cover; that is, if placed exactly, "N" sorbent units would be the exact number necessary to sorb all the oil within the deposition area. There are,

$$M = N^n$$

total ways to place the sorbent units in the deposition area. Note also that this model assumes randomness in two dimensions and rigidity in the third, a not very likely situation; however, the model is being used as an indicator, not as a substitute for the real world.

Now, the probability, P_i, that only "i" unit areas are covered when "n" sorbent units are deposited randomly on a total area of "N" sorbent units is,

$$P_i = \frac{\gamma_i}{\gamma} = \frac{1}{N^n} \quad \frac{N!}{(N-i)!\ i!} \sum_{k=1}^{i} (-1)^{k+1} \frac{i!\,(i-k+1)^n}{(k-1)!\,(i-k+1)!}$$

for i = n or N whichever is less and

where γ_i = the number of ways in which just "i" unit areas can be covered when "n" sorbent units are deposited on an area of "N" total sorbent units.

Now, the expected fractional coverage is just.

$$E_c = \sum_{i=1}^{m} \frac{i}{N} P_i$$

where m = n or N whichever is less

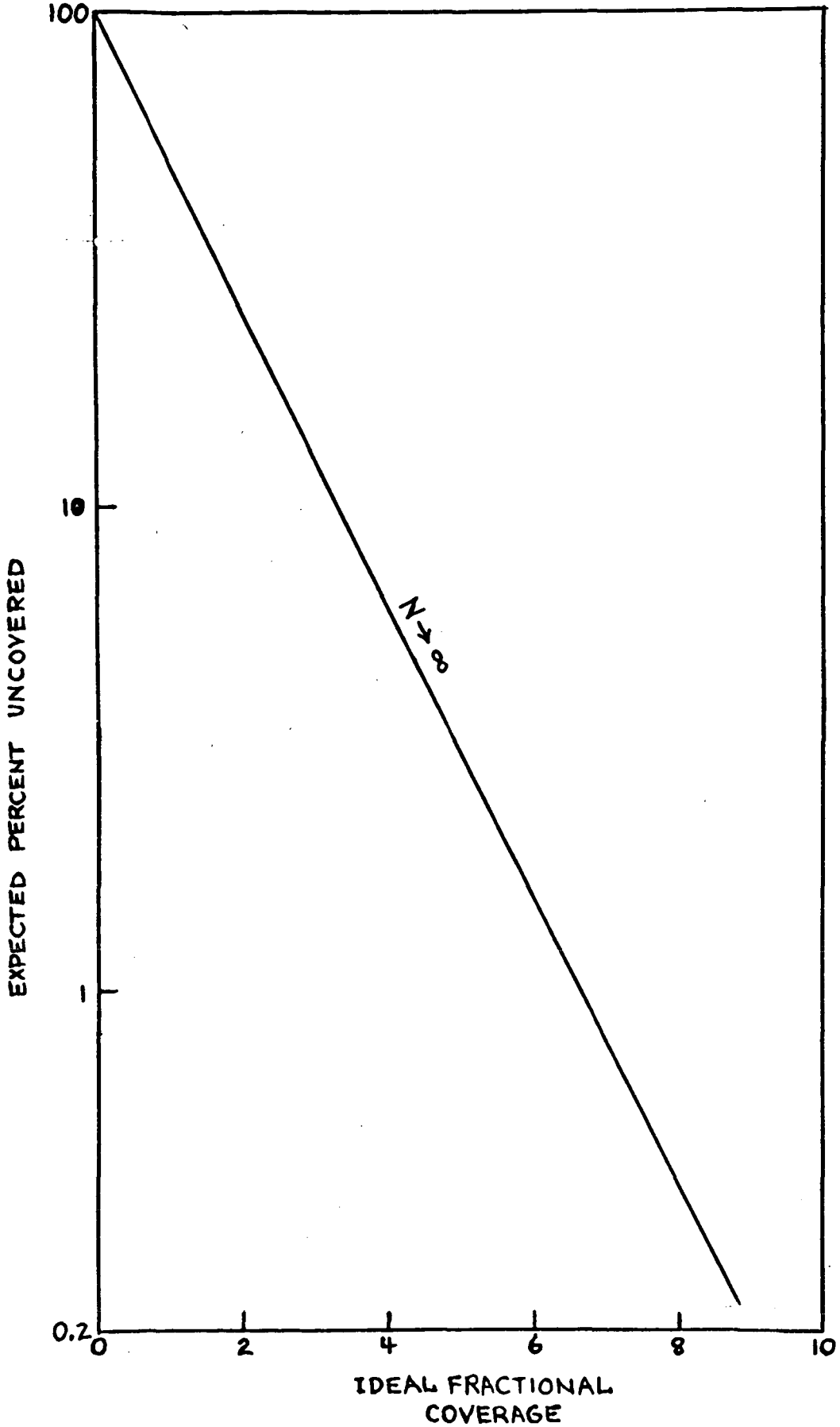
100
10
1
0.2
EXPECTED PERCENT UNCOVERED
N→∞
0
2
4
6
8
10
IDEAL FRACTIONAL
COVERAGE

Figure 6

Although expected fractional coverages may be calculated for a large number of values for "n" and "N", the interesting case is the limit for "N" approaching infinity. The result of this limiting process is presented in Fig. 6 as a semi-log plot of the expected percent uncovered versus the ideal fractional coverage. Note that (n = N) results in 50% of the area remaining uncovered whereas (n = 2N) still results in only 75% coverage.

The analysis just presented points to severe problems with sorbent broadcasting; these are basically: (1) inherent and unavoidable inefficiency unless mechanical means are used to place sorbent on an oil slick in a more deterministic fashion; (2) enhancement of the importance of the basic sorption processes which cannot be overcome to any great degree by selection of a particular broadcast technique; and (3) sorbent losses which occur "independent" of basic considerations of broadcast efficiency and may be looked upon as the broadcast area outside the enclosed area considered in the above analysis. Resolution of the above problems depends entirely on realistic testing of broadcast subsystems plus tank testing to determine the effects of herding and corralling floating sorbent and oil. Such testing is considered in the following sections of this report. For the purpose of emphasis, without additional mechanical or physical constraints, no broadcast subsystem can be more efficient than the one postulated above with a rectilinear statistical model in which sorbent losses have been assigned a value of zero.

Dimensional Analysis

As was the case for basic sorption properties, reduction to dimensionless variables vastly simplifies the basic analysis. The effects of a broadcasting subsystem can be expressed in terms of 9 parameters (given conditions of constant temperature and pressure) which, in turn, lead to 6 dimensionless variables. Assuming separability of the dimensionless variables for the purpose of an engineering study leads to the following expression,

$$\frac{d_i}{H} = A\left(\frac{V_d^2}{Hg}\right)^a \left(\frac{V_w^2}{Hg}\right)^b \left(\frac{V_w \rho_a H}{\mu_a}\right)^c \left(\frac{\rho_s}{\rho_a}\right)^d \left(\frac{c_p}{H}\right)^e$$

where d_i = any of several length parameters which serve to describe the broadcast pattern including width and dispersion

H = a lineal measurement describing the size of the broadcast subsystem; best thought of as the height of the broadcast discharge from the mean water line for the purposes of this study

V_d = air velocity at the broadcast discharge

V_w = wind velocity; in general, a vector quantity although usually directed with the discharge velocity

g = the acceleration due to gravity

ρ_s = the bulk density of the sorbent particles

ρ_a = the density of air

μ_a = the viscosity of air

c_p = length of parameter (in general, an infinite family of same) describing the geometry of the sorbent particles

A = a constant for the particular system in question

S = c_p^2 or surface area of a particle for a given family of particles

Note that for a given family of sorbents both ρ_s/ρ_a and c_p/H may be considered constant as long as sorbent size is scaled with subsystem size. Discharge and wind velocity and their relevant dimensionless parameters are, therefore, of primary interest. Consideration of the effects of these two parameters points to severe problems with the concept of broadcasting by using an open air carrier stream. These problems are dealt with in the following paragraphs.

Laboratory Tests

Table 1 gives the compiled results of an extensive series of broadcasting experiments run in the laboratory. Unfortunately, the general problem of broadcasting sorbent materials is so complex that these data permit only a semi-quantitative analysis. As will be seen, however, such an analysis is sufficient to highlight the difficulties with pneumatic conveyance as a broadcast technique. Sorbent size, shape and condition (again using fully reticulated

TABLE 1. SORBENT BROADCAST DATA

Test No.	V_d feet/minute	V_w (x, y components) (feet/minute)	Y_{cg} (inches)	Y_{sd} (feet/ standard deviation)	X_{cg} (inches)	X_{sd} (feet/ standard deviation)
		Particle Size & Condition - 1/2" Cubes, Dry				
*1	1,050	0	+40	0.42	-1	0.22
*2	1,050	0	+39	0.44	+2	0.16
*3	1,750	0	+79	0.93	+9	0.30
*4	625	0	+21	0.40	+5	0.18
*5	660	0	+17	0.36	+4	0.17
*6	1,200	0	+65	0.79	+8	0.26
*7	1,050	0	+43	0.52	+4	0.19
*8	1,050	0	+44	0.47	-7	0.26
*9	1,050	300 (300, 0)	+37	0.33	-29	0.41
10	1,050	0	+24	0.28	+4	0.23
11	1,050	300 (300, 0)	+23	0.30	-20	0.31
12	1,050	300 (150, 260)	+38	0.36	+16	0.26
13	1,050	1,300 (662, 1,125)	+33	0.55	+20	0.34
14	1,050	1,500 (0, 1,500)	+84	0.73	-12	0.44
*15	1,050	1,500 (0, 1,500)	+113	0.86	-1	0.47
16	1,050	1,500 (0, 1,500)	+79	1.06	-19	0.50
17	1,050	0	+17	0.24	+3	0.20
*30	1,050	0	+46	0.63	+8	0.21
*31	1,050	0	+46	0.55	+8	0.22
*32	1,050	0	+43	0.55	+9	0.23

* Diffuser/Deflector Not Used

TABLE 1. SORBENT BROADCAST DATA (Cont.)

Test No.	V_d feet/minute	V_w (x, y components) (feet/minute)	Y_{cg} (inches)	Y_{sd} (feet/ standard deviation)	X_{cg} (inches)	X_{sd} (feet/ standard deviation)
		Particle Size & Condition - 1/2" Cubes, Dry				
33	1,050	1,500 (0, 1,500)	+52	0.83	-11	0.48
34	1,050	300 (0, 300)	+24	0.24	+1	0.24
35	1,050	1,200 (0, 1,200)	+50	0.47	-7	0.32
		Particle Size & Condition - 1/2", Preoiled				
*36	1,050	300 (0,300)	+24	0.40	+1	0.33
37	1,050	1,200 (0,1,200)	+41	0.43	-4	0.27
38	1,050	1,500 (0, 1,500)	+44	0.46	-4	0.37
39	1,050	0	+18	0.40	+1	0.32
		Particle Size & Condition - 1/2 x 1/2 x 4", Dry				
*18	1,050	0	+54	0.83	+10	0.41
19	1,050	0	+17	0.38	+5	0.42
20	1,050	1,500 (0, 1,500)	+65	1.13	-6	0.58
*21	1,050	1,500 (0, 1,500)	+103	0.90	-5	0.62
		Particle Size & Condition - 1 x 1 x 1/2", Dry				
*22	1,050	0	+62	0.60	+9	0.22
23	1,050	0	+15	0.38	+5	0.36
24	1,050	1,500 (0, 1,500)	+75	0.85	-9	0.48
*25	1,050	1,500 (0, 1,500)	+118	0.87	-6	0.35
		Particle Size & Condition - 1" Cubes, Dry				
*26	1,050	0	+59	0.52	+6	0.32

* Diffuser/Deflector Not Used

TABLE 1. SORBENT BROADCAST DATA (Cont.)

Test No.	V_d feet/minute	V_w (x, y components) (feet/minute)	Y_{cg} (inches)	Y_{sd} (feet/ standard deviation)	X_{cg} (inches)	X_{sd} (feet/ standard deviation)
*27	1,050	1,500 (0, 1,500)	+93	0.49	-3	0.60
28	1,050	1,500 (0, 1,500)	+49	0.65	-5	0.40
29	1,050	0	+19	0.40	0	0.32
		Particle Size & Condition - 1' Cubes, Preoiled				
40	1,250	0	+23	0.57	+2	0.42
41	1,250	300 (0,300)	+19	0.52	-1	0.49
42	1,250	1,200 (0, 1,200)	+29	0.48	-2	0.50
43	1,250	1,500 (0, 1,500)	+41	0.66	-4	0.49

* Diffuser/Deflector Not Used

polyurethane foam with 100 pores per inch) broadcast air velocity, wind velocity (normal to the broadcast direction, x, and the parallel, y), plus the specific system used in the tests are the independent variables. The dependent, measured, variables are as follows:

Y_{cg} = the mean distance (first moment) in the broadcast direction to which a sorbent particle was carried during a test (inches)

Y_{sd} = the standard deviation or second moment of the distribution of sorbent particles in the direction of broadcast (feet)

Y_{cg} = the mean distance (first moment) normal to the broadcast direction at which a sorbent particle was deposited (inches)

Y_{sd} = the standard deviation or first moment of the distribution of sorbent particles normal to the direction of broadcast (feet)

Measurement was carried out by literally counting particles on a six inch grid after a broadcast run had been made. Initial observations verified that the distributions were close to Gausian in shape and, therefore, that a "normal" statistical analysis and description pertained.

The Figures (Figure 7 and Figure 8) on the following two pages illustrate the basic configuration of the laboratory broadcast system and the diffuser deflector called out in Table 1. The system consisted essentially of an air blower with damper, a screw feeder which injected sorbent into the blower discharge stream, and galvanized duct which guided the air/sorbent stream to the point of exit from the system. Initial tests (compare numbers 8 and 10) confirmed that free discharge from an open duct led to relatively large broadcast range (44 inches) and high scatter (standard deviation of about 0.47 feet). On this basis a broadcast diffuser/deflector was designed in an attempt to (1) separate carrier air and sorbent from one another after exit from the duct; and (2) direct the sorbent down onto the receiving surface rather than allow excess scatter over the surface. The results comparing these two basic approaches are discussed later.

Broadcast Velocity

Inspection of the data of Table 1 indicates that both

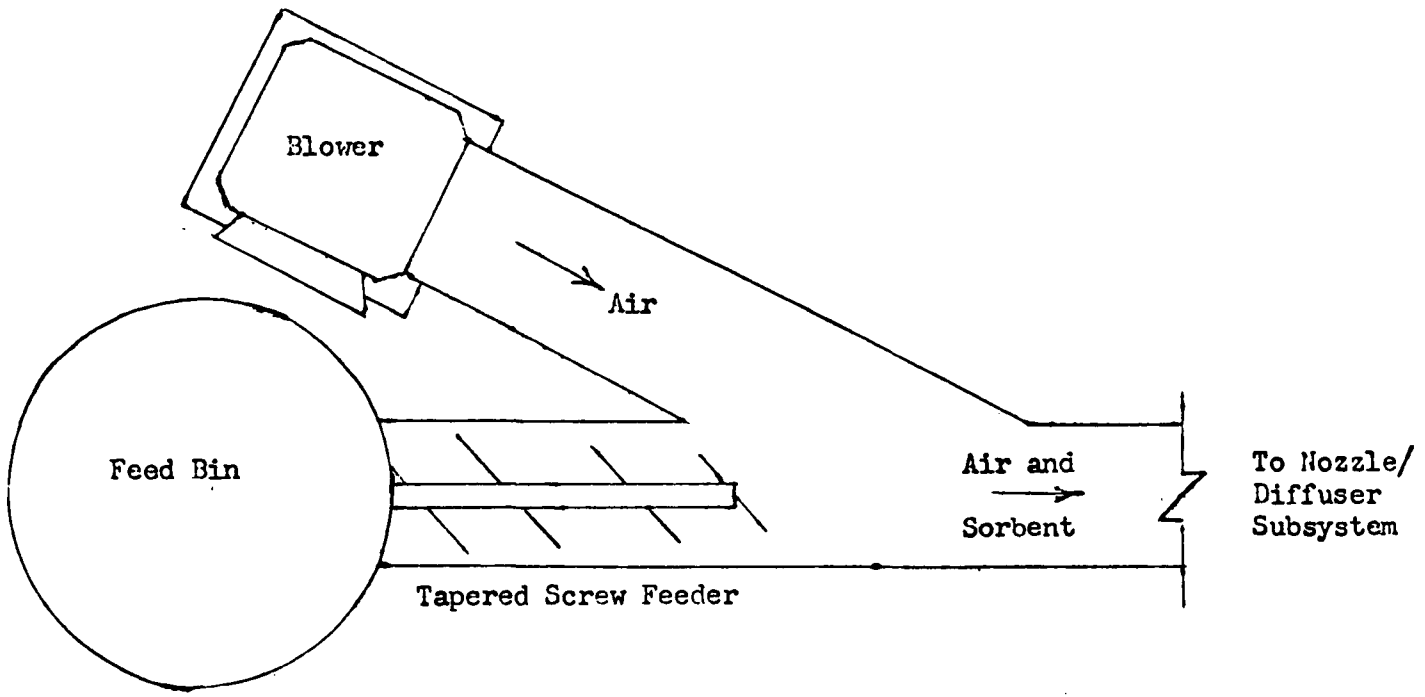

Figure 7. BLOWER/INJECTOR SUBSYSTEM
(plan view cross section)

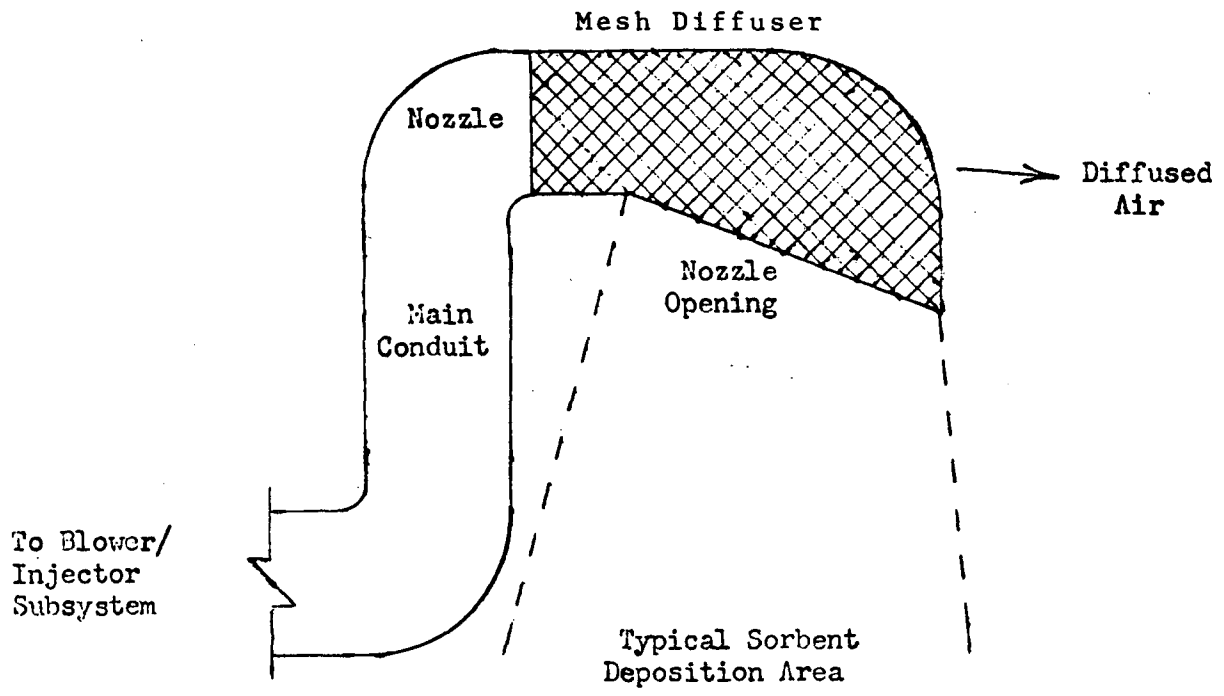

Figure 8. NOZZLE/DIFFUSER SUBSYSTEM
(side view)

broadcast distance and standard deviation vary in proportion to broadcast velocity in the direction of said velocity. That is, the exponent a in the general dimensionless equation is approximately ½. Normal to the broadcast velocity, its effect (on, say X_{cg} and X_{sd}) is less important and for the purpose of this work can be considered negligible.

Broadcast velocity, as to be expected, is, therefore, a very important parameter which, as it is increased, not only increases deposition range but also decreases control over deposition pattern. In this sense, there is no scaling advantage, and broadcasting by air blowing will be inefficient for a large scale system just as has been demonstrated for small scale systems in the laboratory and a rectilinear random model on paper.

Wind Velocity

For estimating purposes, wind velocity may be considered to provide proportional increases in both broadcast distance and deviation as does broadcast velocity. Its functional relation to these length parameters can, however, not be represented quite so simply as that for broadcast velocity. Under reasonable conditions (and for the purposes of the study here) the kinematie viscosity of air (μ_a/ρ_a) should have a minimal effect on the performance of the broadcast system and thus V_w and H which appears also in dimensionless groups 2 and 6 need not be considered in dimensionless group 3. Therefore, the exponent c is zero. With the effect of dimensionless group 3 being nullified the effect of V_w is in group 2 with the exponent 6.

Although the wind velocity may drop to zero, the various length parameters describing the broadcast distribution do not necessarily also go to zero (due to the existence of a finite broadcast velocity). The implication is that the parameter b in the general distribution equation cannot be a constant. However, since the parameter a is approximately constant and since for the range of experimental investigation wind velocity had much the same effect as broadcast velocity, the dimensionless function $(V_w^2/Hg)^b$ may be equally well represented by the dimensionless form,

$$1 + B \frac{V_w}{(Hg)^{\frac{1}{2}}}$$

where B is approximately constant. The new form of dimensionless group 2 in the above equation conforms to all the requirements of dimensional analysis and represents the physical system more accurately. For the laboratory scale system under consideration, $(Hg)^{\frac{1}{2}}$ has a value of about 11.4 ft/sec. The data shows that for wind velocities of 0, 300, 1200 and 1500, ft/min (dry, ½ inch cubes and broadcast velocity of 1050 ft/min) in the direction of broadcast, Y_{cg} was approximately 17, 24, 50 and 80 inches respectively. Therefore, B has an average value of about 1.3 which is sufficiently precise for preliminary design purposes.

Sorbent Oiliness

Sorbent oiliness relates to two basic phenomena: (1) the effect of sorbent density on broadcast pattern and (2) the hindering of broadcasting by particle interactions due to "tackiness." In a strictly ballistic sense, the former phenomena would be of little importance; however, ejection of material from a nozzle does depend critically on material density. On the other hand, the latter phenomena would seem, at least superficially, to be of more importance, but the data does not appear to bear this out. Unless the sorbent has a considerable excess of very tacky (viscous) oil, the turbulence of the broadcast air stream apparently imparts enough energy to the particles to permit only collisional interactions, not surface-to-surface adhesion.

Typically, oiled sorbent which has been wrung out has a density of 3 to 4 times that of dry sorbent. The data of Table 1 indicates a decrease in the broadcast length parameters of 10 to 20% due to this increased sorbent particle density. The parameter d in the basic broadcast has, therefore, an apparent value of about -0.13.

Sorbent Size and Shape

Size and shape of the sorbent particles should and do have a very significant effect on broadcast pattern. Surface or "sail" area would seem to be the parameter of most relevance; defining such a parameter in quantitative terms can, however, be a considerable problem. It is best to consider particle size and shape effects on an individual basis, but with some caution in its application the analysis in the following paragraph can be of use in preliminary design considerations.

Consider the sorbent length or size parameter, Cp, in the basic broadcast distribution equation to be the square root of the particle surface area, S, or

$$Cp = S^{\frac{1}{2}}$$

Now, four basic particle sizes and shapes were considered in the laboratory tests: ½ inch cubes, 1 inch cubes, 1 x 1 x ½ inch plates and ½ x ½ x 4 inch parallelpipeds with surface areas of 1½, 6, 4 and 8½ square inches respectively. Considering the data for a 1,050 ft/min broadcast velocity, 1500 ft/min wind velocity, without the diffuser/deflector and dry sorbent, the effect of particle surface area is represented by a value of e of about -0.14. This implies, for instance, that broadcast distance decreases with increasing sorbent particle surface area; similarly the spread of the particle distribution also decreases slightly with increasing surface. Again, this development must be used with great care since the effects it attempts to represent are very complex. Anyway, the effect of particle surface area on broadcast deposition is not very large; that is, it is not nearly as important as the effect due to a similar parameter on the basic sorption process.

Broadcast Equation

The basic broadcast equation has been reduced to the approximate form:

$$\frac{d_i}{H} = A \frac{V_d}{(Hg)^{\frac{1}{2}}} \left[1 + 1.3 \frac{V_w}{(Hg)^{\frac{1}{2}}}\right] \left(\frac{\rho_a}{\rho_s}\right)^{0.13} \left(\frac{H^2}{S}\right)^{0.07}$$

Combined with the rest of the basic data on Table 1, this relation can be used, judiciously, in the preliminary design of an air carrier broadcasting system.

Air Blown or Gausian vs Rectilinear Broadcast System

In "A Random Model" section, a mathematical analysis was made of the percent coverage that could be obtained by a random 2 dimensional rectilinear distributed system for the distribution of sorbent particles. Experimentally, a less optimal system broadcasting of sorbent by air carrier was used. From the air carrier system a Gausian distribution at best would be expected. An a priori evaluation of the two systems is that the rectilinear system, for the same percent of even coverage and sorbent loss, will require the broadcasting of approximately half the sorbent.

Ideally, particle-by-particle placement on a slick (with exactly the right spacing between the positioning of particles) would be preferred. In a practical sense,

however, such a goal is not realizable.

This study lead to the conceptualization of a screw conveyor deposition system which, although not ideal in the sense of the previous paragraph, provides for positive placement of sorbent in a boom channel with a minimum of effects due to the environment and the behavior of the rest of the oil recovery system.

In the rectilinear system the probability of a particle being placed across the width of the slick is equally unlikely. This means that the edges of the channel will be equally well covered with sorbent as the center. In the air carrier system a Gausian distribution occurs in the channel cross section. In the Gausian distribution, the cross section density of particles in the channel is the familiar "bell shaped curve," meaning that a large percentage of the particles are clustered in the middle of the channel and little on the edges. If one wishes to even out the coverage in the air carrier system, then the losses may reach percentages as high as 30% while in the center there will still be a peaking of sorbent density. One may consider an air carrier system to be analogist with that of a shot gun blast into a target where the center is more densely covered than the periphery with particles straggling out beyond the edges.

The rectilinear system is somewhat analogous to a sewing machine with a loose needle thus the probability of a stitch at any point along the extant of the sewn part is equally likely. Since the designing of a rectilinear dispersion system is easier and more reliable than that of a blower system, it is obvious why we have chosen the more novel of the two.

Furthermore, the sensitivity of the broadcast distribution parameters to the many parameters of interest weighs heavily against the use of air carrier approach. For instance, variations in discharge velocity cannot be tolerated since broadcast distance and spread are approximately proportional to same. Sorbent losses with a fixed boom or containment system would, therefore, increase with something like the square of an increase in broadcast velocity. The effectiveness of broadcast deposition pattern ("evenness") would decrease in a similar fashion with decrease in broadcast velocity.

Wind velocity would have a similar effect but, more importantly, is an uncontrollable design factor. Gusting

winds of from 0 to 10 knots would produce fluctuating changes in broadcast distribution of from 0 to 200%. This represents about an order-of-magnitude changes in sorbent losses or deposition effectiveness which is generally unacceptable in process design.

Furthermore, sorbent density (wringing efficiency or changes in same) has a significant effect on broadcast deposition. This also is deleterious from the viewpoint of a relatively steady-state process design.

In conclusion, broadcasting of sorbent particles using an air carrier stream is an unacceptable technique except under the most idealized environmental and system operational conditions.

The only drawback to a rectilinear dispersion system is its inflexibility as to width. A blower system can readily be adjusted in all of its inefficiencies to handle the width of 10-20 feet. However, to go from 10-20 feet with a rectilinear dispersion system requires an entirely new dispersal design. Since the channel width is fixed by the system, this is not considered a drawback.

In the above discussion it has been assumed that quiesent air and other optimable conditions are present. For varying winds, turbulence, rocking motion and variations in density of particles due to inefficiencies in the recovery system or degradation of particle size, the rectilinear system becomes even more effective. For example, consider the most commonly expected variable, namely wind velocity. Since the air carrier system uses air velocity to disperse the particles, turbulence and wind velocity will disperse the particles where they are not desired. This means higher losses and even less uniform distribution. The rectilinear system on the other hand, because it can be shrouded close to the water level will be little affected by air velocity. A shroud leading from the dispersion nozzle to within a foot of the water will allow the random distribution of the particles to fall unaffected by turbulence, dust, or steady wind.

Other variables such as the roll of the vessel, change in the air pressure density temperature will have no affect. Furthermore, strong variations in the density of the particle due to retaining either water or oil will likewise not affect the rectilinear nozzle. Variations in particle size will not affect the volume distribution across the rectilinear nozzle - it will affect statistically where the

smaller particles land. In other words, we expect some segregation of the finer particles to occur but where smaller particles are deposited more of them will be deposited so that the volume of material distributed across the inlet will remain roughly rectilinear.

In the air blown system, these smaller particles will be carried much further and will be subject to dusting, turbulence, and steady wind resulting in much higher losses.

Behavior of Sorbent in Slick

As a slick is compressed, distribution of the sorbent particles becomes better than random. If the particles are small enough and the initial distribution were thoroughly effective, then there will be a mechanical rearrangement of sorbent distribution as the slick is compressed by the herding booms. The distributional rearrangement will be short ranged and thus voids in the center if the particles are dense in the center will tend to disappear whereas voids in the periphery if the distribution is scant may tend to decrease but not significantly. Thus, as the slick is compressed it is important that the initial particle distribution be as uniform as possible. In the case of platey material, particles falling on top of each other will act as one particle because of tne stability of the stacking. Thus, the rearrangement phenomenon argues for square or round particles rather than platey ones. Furthermore, bridging is less likely to occur with square or chunky particles than with platey or stringy particles. Once bridging occurs, effectiveness of the sorbent recovery system is comprised and lost rate becomes exhorbant as will be discussed in Section VI, Choking of Sorbent in Channel.

Rectilinear Broadcast System

In the above paragraph it was shown that any rectilinear system would be far more effective than any air carrier broadcast system. The superiority of the rectilinear system is due to the more uniform deposition of sorbent across the channel width, its freedom from turbulence, wind velocity and other manifestations of sea state as well as its much lower loss rate in any operational system.

Below is a brief description of the system. Material is fed into the rectilinear broadcast system from belts. It is transported across the channel for distribution by a

screw conveyor. The sides of the conveyor are sloping a triangle arranged so that the amount of volume of material spilling over the edge of the conveyor is equal at all points. This arrangement means that particle size and shape do not materially affect the volume of material being dropped at a given point in the nozzle.

The material then drops straight down towards the surface of the sea, shrouded from the wind by two skirts of metal parallel to the direction of flow of the conveyor and perpendicular to the surface of the sea. Essentially, these skirts are simply wind shields that allow material to drop vertically.

The system is easy to construct, easy to run, it is rugged and reliable and should work under all but hurricane level winds. The system has the further advantage that foreign body damage is unlikely to occur for a wide variety of particles in both size, hardness and density can be handled. It is, in short, the well known screw conveyor of the chemical engineering field adapted to this use.

Conclusions

In this section we have described and developed a dimensional analysis equation shown earlier in this section under, Broadcast Equation, which fits the experimental data for air carrier broadcast systems. Furthermore, based on these results we have determined an alternate approach. The following conclusions can be drawn.

(1) The above mentioned equation adequately describes air carrier broadcast systems.

(2) Air carrier broadcast systems result in high loss and poor coverage.

(3) Particle shape should be chunky rather than stringy or blocky.

(4) Rectilinear distribution systems will yield lower sorbent loss, uniform dispersion and greater oil pickup.

SECTION VI

SORBENT HERDING

The sorbent recovery system consists of a boom, channel, a recovery conveyor and a broadcast system. The layout, Figure 12, shows a ship and attached to the ship, the herding boom, which is inclined out at 30° from the direction of the ship. This boom compresses 4/1 the slick into a channel four feet wide. The absorbent is broadcast in the area and is also entrained in the channel. The oil sorbent and water move down the channel and are picked up by a sorbent recovery conveyor.

Description of System

The system attached to the ship consists of a boom support arm jotting out at right angles from the ship terminating in the support float which is the lead end of the herding boom. The herding boom is a barrier extending 2.2 feet below the nominal surface of the water. The boom is diamond shaped in cross sectioned with the water level being at the widest point of the diamond. The boom is described in greater detail on Page 125 in Appendix A. The boom itself is articulated and has rapid wave following characteristics and at the design speeds is effective in containing the oil. The boom's function is to compress the slick into the channel.

Sorbent is broadcast in back of the channel mouth where the slick is being compressed. The slick and the absorbent enter the channel. The juncture between the boom and the channel is supported from the ship by the aft boom support arm. The outer barrier to the channel is identical to the herding boom in construction but its orientation is parallel to the center line of the ship. In the channel the slick is four or more times thicker than the ambient slick due to the compression from the herding boom and from the ship's bow. The speed of the slick moving through the channel is significantly less than the free stream speed. This causes further thickening of the slick and increased contact time between sorbent and oil. The reasons for the lower channel speed of the slick are complex but are due in part to drag forces and also the forward motion imparted in the channel from the recovery conveyor belt. The bottom part of the recovery conveyor belt acts as paddles, tending to create a general motion forward in the channel and at ship speeds below half a knot material tends to flow out of the channel rather than back towards the pickup conveyor belt.

The pickup of the sorbent is done by an open mesh belt whose openings are small enough to trap the sorbent particles, but large enough to allow water and smaller debris to flow through. Essentially it is a sieve separating the sorbent from the sea water. As the sorbent rides up the conveyor belt, mechanically entrapped water drains from the system. The pickup conveyor is described in greater detail in Section VII.

Boom Design Problems

Other than durability, suitability and wave following characteristics of the boom, the main problems unique to the oil sorbent recovery system are: design strength, loss of bulk oil and loss of oil by entrainment. Calculations based on area drag show that at 4 knots the strength safety factor for this sytem is tenfold, indicating that mechanically this system may be operated for extended periods of time at 4 knots without mechanical failure.

Loss of bulk oil under the boom when herding is governed by a dimensional number called the densiometric Froude number. This "run-under" the boom or "drainage" is a gravity phenomenon and the point where drainage will occur is at Froude numbers in excess of 1.1.

$$N_{FRD} = \frac{V}{\sqrt{Lg\,\frac{\rho_w-\rho_o}{\rho_o}}} \qquad \text{(Froude Number)} \quad 6.1$$

Where V = Free stream velocity perpendicular to boom

L = Depth of barrier below the slick

g = Gravity constant

ρ_w = Density of water

ρ_o = Density of oil

This equation may be modified to calculate the depth:

$$L = \left(\frac{V}{N_{FRD}}\right)^2 \left(\frac{\rho_w}{\rho_w-\rho_o}\right) \left(\frac{1}{g}\right) \qquad 6.2$$

Where N_{FRD} = 1.1

g = 32.2

$\frac{\rho_w - \rho_o}{\rho_w}$ = .135 (#4 Fuel Oil)

V = 1 knot (1.685 ft/sec)

At the design speed of 2 knots per second the velocity at right angles to the boom inclined at 30° is not 2 knots, but one knot because Sin 30° is 1/2.

$$L = \left(\frac{1.685}{1.1}\right)^2 \left(\frac{1}{.135}\right) \left(\frac{1}{32.2}\right) \qquad 6.3$$

$$L = .55 \text{ feet}$$

At a free stream velocity of 4 knots the perpendicular velocity of the boom is 2 knots and the depth from equation 6.2 to maintain a critical Froude number is 2.2 feet. This is the design depth of the boom and it means that with a nominal #4 oil the system will not suffer oil bulk oil losses. In actual operation, however, when the boom tends to bend or the density of the oil is increased, oil will begin sliding under the boom at lower velocities. However, at the designed operating speed of 2 knots, little or no loss is anticipated.

Sorbent loss under the boom, due to the Froude effect, is expected to take place at even higher Froude numbers due to mechanical properties of the sorbent and the fact that it will consistently have a lower density than the oil.

Another form of oil loss is called entrainment, a phenomenon in which the oil is broken into droplets by turbulence and behaves as does the water column. Thus, since the bulk of the water flows under the boom, entrained oil will also. For a boom of the depth indicated here, entrainment losses begin at approximately 2 knots. Entrainment is the result of the turbulence due to the water in contact with the boom and thus the amount of oil lost is the function of the square of the velocity. At lower speeds, the percent lost is small.

Sorbent losses due to entrainment will be quite small due to the fact that sorbent is not broadcast in the region of

contact with the boom and will in this region have significantly lower densities than the oil, thus remaining on the surface, easily herded.

Hydrodynamics of Slick Flow in Channel

When the slick enters the mouth of the boom it is compressed into the channel. Basically, two effects take place, the slick is thickened and the velocity of the slick in the channel changes. Obviously if the slick velocity remains the same as the free stream velocity, a significant thickening will occur of the slick in the channel. If the width ratio of the mouth to the channel is four to one, then the slick thickness in the channel will be four times the free stream thickness. However, due to drag, forces on the slick and the sorbent recovery belt the slick velocity in the channel is significantly reduced.

Figure 9 is a dimensionless plot of channel width divided by mouth width vs slick velocity divided by free stream velocity. This plot indicates two important phenomenon; first, that (for the oils studied) when the channel width to the mouth width ratio is 0.25 (1-4), the slick velocity is approximately one-half the free stream velocity. Below .25 the slick velocity rapidly decreases with decreasing channel to mouth width ratio. Thus, the design parameter chosen for the system was a channel width to mouth width ratio was .25.

The second important phenomenon is that increasing oil viscosity means decreasing slick channel velocity. For example, the #2 fuel oil has a velocity of approximately 55% of that of the free stream velocity whereas for #4 fuel oil the slick channel velocity decreased to 45%. This means that residence time in the channels for the more viscous, heavier oils increases thereby increasing contact time with the sorbent and also increasing depth of slick in the channel.

Assuming no loss of oil under the boom, the simple compression means an increase in slick thickness. However, there is a further thickening of the slick due to the decrease in slick velocity in relation to the free stream slick velocity. Figure 10 shows the slick velocity as a function of distance along the channel. In Figure 10, the mouth width to channel width is 3/1 and simple compression would dictate that the slick thickness should be three times as great in the channel as in the free stream. But actual measurement shows that it is over six times as thick.

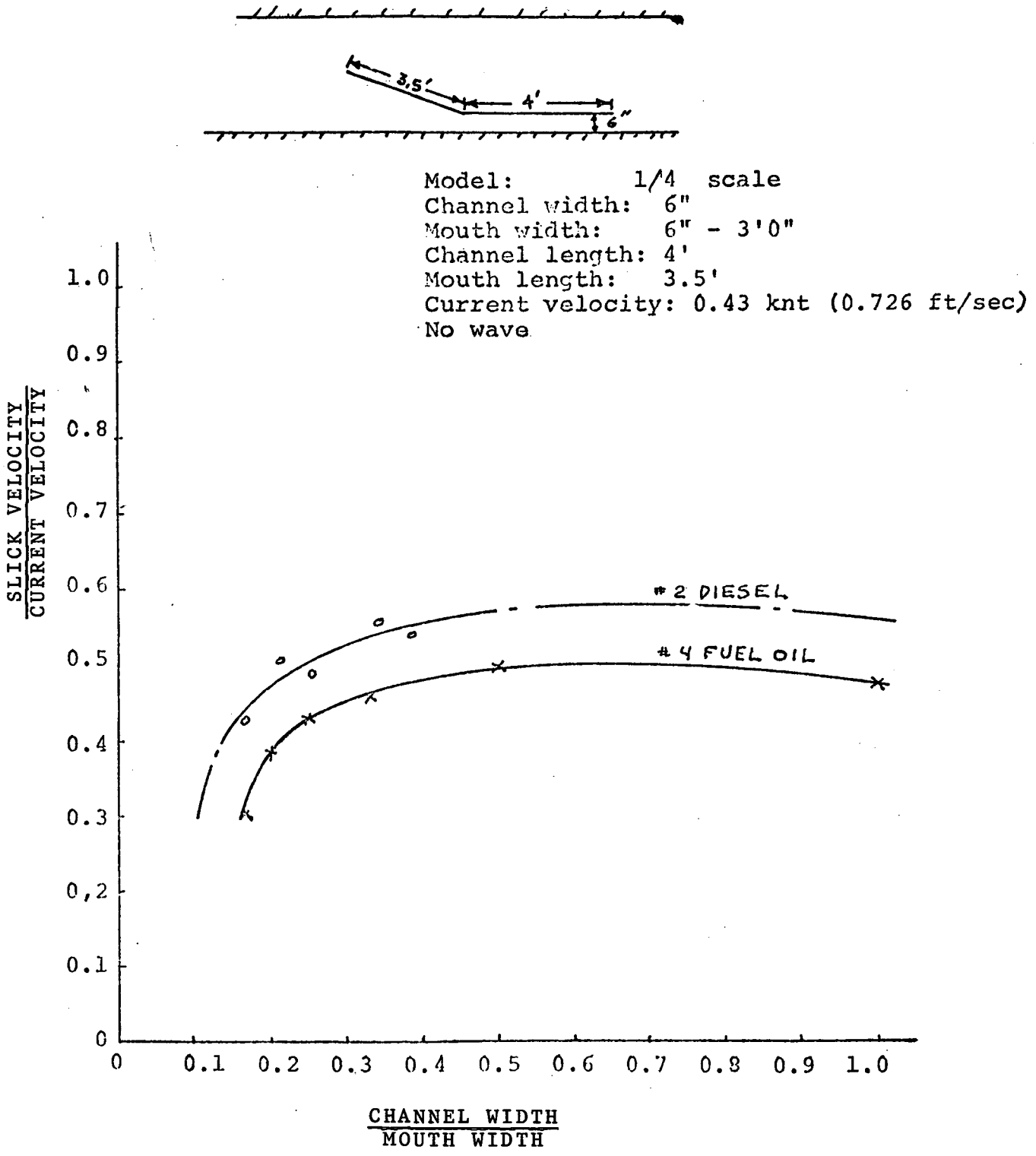

Figure 9. RELATIONSHIP BETWEEN SLICK VELOCITY IN CHANNEL AND BOOM GEOMETRY

Oil type: #4 Fuel Oil

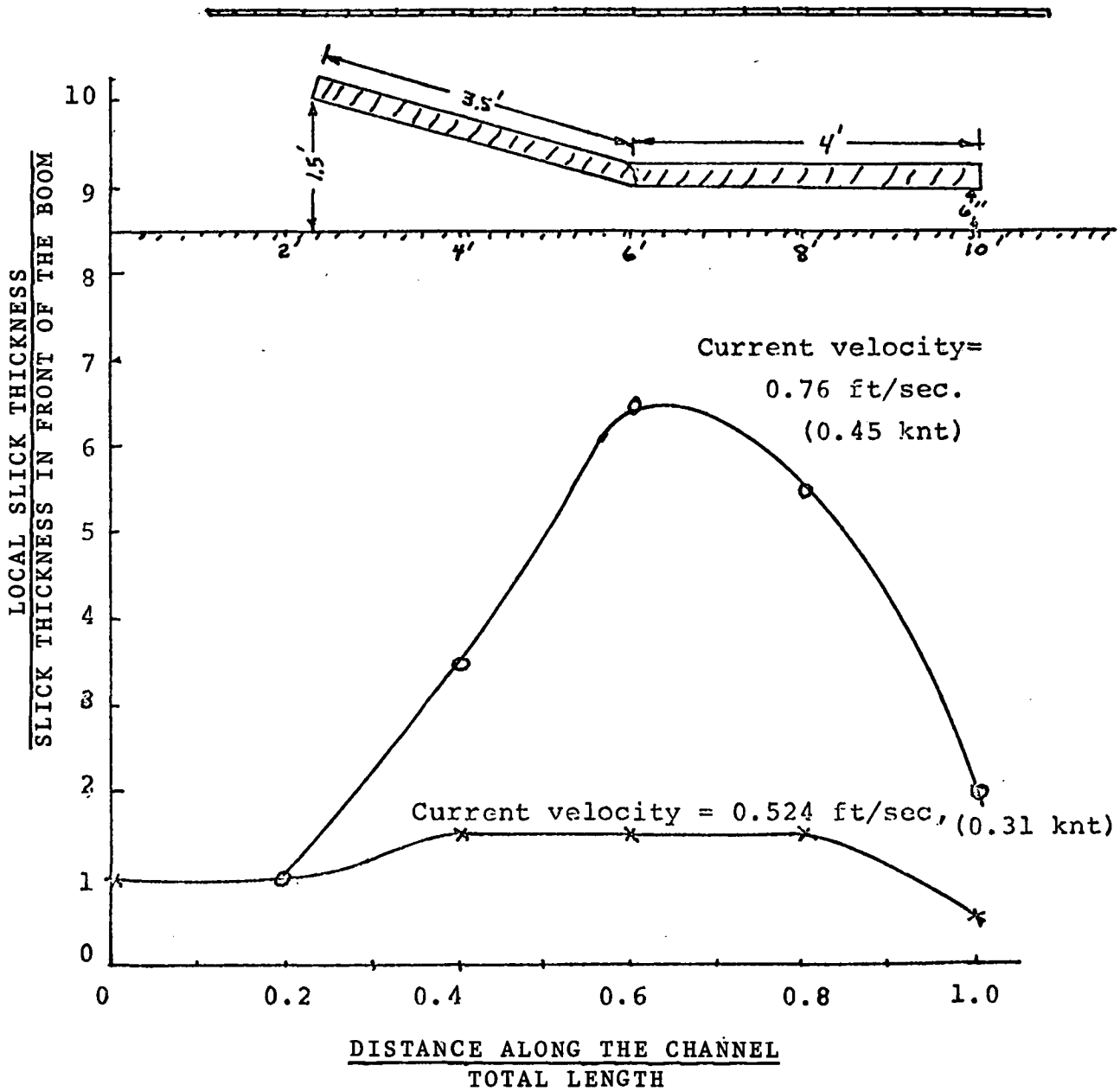

Figure 10. RELATIONSHIP BETWEEN OIL PILE-UP AND CURRENT VELOCITY

This additional doubling of the thickness is due to the channel slick velocity being half the free stream velocity.

Hydrodynamics of Sorbent Flow

In the previous section the behavior of oil in the channel was described without sorbent being present. When a sorbent is added there is a further increase in slick thickness and decreased slick-sorbent velocity. This relationship is linear for a wide variety of conditions and is described by $V_s = 0.57\ V_o$ where V_s is the velocity of the sorbent in the channel and V_o is the velocity of the oil slick in the channel.

Thus, the addition of sorbent of the type used in the system cuts the channel velocity flow in half again ($V_s = .57\ V_o$). Therefore, the ratio of sorbent velocity in the channel to the free stream velocity is approximately one-fourth, half the reduction being due to the presence of the oil - Figure 9 - and the other half being due to the presence of sorbent resulting in the equation in the previous paragraph. From straight mass balance considerations, it follows that if the velocity of the sorbent and slick in the channel is reduced to one-fourth the free stream velocity then the thickness of the slick must be fourfold in order for the same amount of oil to pass a given point in a given time.

There is a further enhancement of the slick thickness at the mouth of the channel due to the fact that the sorbent has not absorbed oil. Thus, the additional thickness of the slick with sorbent will decrease as one moves down the channel and oil absorbs into the sorbent material. This enhanced slick thickness at the mouth of the channel is due to the free space in the sorbent before it becomes saturated with oil.

Waves adversely affect sorbent velocity. Interestingly enough, there is at first a marked decrease in slick channel velocity with increasing wave height and then as wave height further increases, sorbent velocity in the channel climbs back asymptotically to the wave free velocity.

Sorbent size also affected channel velocity. As sorbent size increased, sorbent velocity in the channel decreased.

Choking of Sorbent in Channel

Under a variety of conditions, choking was observed to occur in the channel. Once choking occurs there is a continued build-up in front of the channel and both sorbent and oil are lost. Sorbent build-up in the channel has the typical shape of head waves similar to those formed by an oil slick in front of a barrier. The head wave migrates as does oil slick head wave and it sheds individual sorbent particles similar to the way an oil head wave sheds oil droplets. Choking is dependent on sorbent broadcast rates and size as well as boom geometry and current velocity.

Choking occurs as slick or sorbent channel velocity decreases and a packing of the sorbent occurs where particles not only are touching each other on the surface but also underneath. Literally, bridging occurs which has sufficient physical strength to resist the velocity pressure head. In actual operation, choking can be controlled by vessel speed and sorbent broadcasting rates and the choke channel can be broken up mechanically by agitation supplied from onboard the vessel.

Contact Time

Sorbent particles one inch on an edge will reach operational saturation in under five seconds if the slick thickness is great enough. Thus, the required contact time in the channel is five seconds or longer. At 2 knots, sorbent particles cover 20 feet in 5.88 seconds. Since sorbent velocity in the channel is approximately 1/4 of free stream speed, the residence time in the channel is four times longer than the free stream velocity. Thus, for a free stream velocity of approximately 2 knots the contact time is on the order of 24 seconds and at free stream velocity of 4 knots, contact time is on the order of 12 seconds. Thus, the absorption or contact time for sorbent particles in the oil is more than sufficient. Actually, the channel length could be cut by ten feet and still meet design specifications.

Oil Pickup Rate

A series of scale model tests were run in a wave tank to determine the efficacy of the system. Basically, a 1/4 scale model system was set up, the sorbent was broadcast, picked up, cleaned and rebroadcast. This was done under a variety of conditions to determine the dynamics of the system described earlier in this section. After choosing the final configuration a further series of tests was run and then

based on the data obtained, an equation was set up describing what sorbent flow rates should be and what the oil pickup rate would be. It is as follows:

(1) $Q_F = (C)\ (W)\ (h)\ (k_1)\ (k_2)$

(2) $Q_0 = Q\ (\xi_1)\ (\xi_2)\ (\xi_3)$

Where Q_F = Sorbent flow rate down channel (ft^3/min)

C = Free stream velocity (ft/min)

W = Channel width (ft)

h = Cube height (ft)

k_1 = Area density ratio of cubes in the channel

k_2 = Ratio of sorbent velocity to current velocity

Q_0 = Oil pickup rate (ft^3/min)

ξ_1 = % sorbent retained after each cycle

ξ_2 = % of oil and water recovered by volume

ξ_3 = % of oil recovered by volume

The constants k_1 and k_2 are estimated to be respectively 0.5 and 0.3.

Assuming a free stream velocity of 2 knots, a channel width of 4 feet and sorbent cubes 1 inch on edge, the sorbent flow rate is 10 cubic feet per minute.

It is estimated that ξ_1 the sorbent loss rate will be less than 0.5% or ξ_1 equal to .995. ξ_2 is the percent of the cube volume that is filled with liquid - oil or water. ξ_2 is assumed to be one due to the long contact times in the channel relative to that needed for operational saturation. ξ_3 - the percent of oil by volume recovered from the sorbent cube after it is picked up, is estimated to be 95%.

Substituting the figures in the above equation, number (2):

$Q_0 = Q_F\ (\xi_1)\ (\xi_2)\ (\xi_3)$

with Q_F = 10 ft /min^3(maximum)

ξ_1 = .995

ξ_2 = .95

ξ_3 = 1.0

Q_0 = 9.45 ft^3/min

= 70.5 gal/min

= 4230 gal/hr (maximum)

The results indicate that with the experimental data and the design parameters that the 3000 gal/hr condition can readily be met. The assumptions made include several about slick characteristics. It was assumed that the slick thickness was 1.5 mm, that it was continuous and that the ship was continuously in the slick. If there are variations in slick thickness or patchiness of the slick, but these are of short duration and the overall volume of oil remains constant, then the system performance will still be approximately the same. However, if there are deep slicks in spots with extended patches of clear water between the oil then the system's performance will be seriously degraded.

Sorbent Loss

As designed, sorbent loss is not expected to be a significant problem. Loss of sorbent during the broadcasting process should be minimal. From Froude number considerations and operating at 2 knots, loss under the boom should not occur. Entrainment losses should be a minimum. For an operational system, harvesting losses should be quite small.

Condition of bleeding sorbent under the boom, choking in the channel, degradation of the boom or of the pickup system will lead to rapid massive sorbent loss. Sorbent can also be lost if the system does not shut down during operations involving sharp turns or backing. Degradation of the mechanical pickup system will obviously lead to sorbent loss.

Conclusions

The sorbent herding system will be able to meet design specifications with relative ease and minimal losses. Contact time is sufficient, loss of oil and sorbent in the operational system is minimal.

Operating at the maximum system speed, 4 knots free stream velocity, some oil loss is anticipated but sorbent contact time is more than adequate and sorbent loss should be minimal. However, should choking of the channel occur, rapid degradation of the system's performance will result with massive losses of sorbent. The situation would be exacerbated with the presence of debris.

SECTION VII

SORBENT PICKUP

The oil saturated sorbent is picked up by an inclined open mesh wire belt and then dropped on a horizontal belt transporting the particles to the recovery system. The open mesh screen of the pickup belt allows water to freely flow through the system but the sorbent particles are too large to go through the mesh of the belt and hence are lifted on the deck. During the lifting of the sorbent from the water surface to shipboard, the open mesh allows mechanically entrained water to drain back into the ocean. Drainage is important as water would become entrained in the oil during processing, degrading the oil product with excess water.

The sorbent belt extends two feet below the surface of the water. The belt is permanently attached to the ship and its actual depth in the water will vary with the ships roll. This will not be a serious problem.

As the belt moves through the water it tends to decrease the thickness of the oil-sorbent slick. Material in front of the channel pushes the slick to the rear, towards the belt, and the mechanically absorbed oil absorbent is lifted up by the belt's action. The water passes freely through the mesh of the belt. Losses around the edge of the conveyor are prevented by the use of a flexible skirt sealing the edge of the conveyor to the ship. The conveyor is the full width of the channel and sealed to the outer boom by a mechanical linkage.

The required theoretical power to lift the sorbent is less than 3/10 of a HP but the design specifies a 2 HP motor with a variable speed drive. The added HP is used to overcome belt and the variable speed motor friction and other binds in the system which may result from prolonged operation.

Sorbent and Oil Losses

Operating at the designed condition of 2 knots an hour, little sorbent or oil loss is anticipated. Oil which is not absorbed may pass readily through the screen and hence constitute a loss but it is a system loss not a mechanical one. Sorbent is unlikely to pass under the end of the conveyor unless ships roll becomes a problem. Build-up of sorbent in front of the conveyor to the point where it would pass under the conveyor is not considered a problem

since there is a significant thinning of the slick sorbent area near the conveyor. Debris too large to be picked up by the conveyor can build up and force sorbent underneath the boom resulting in a loss not only of sorbent but also oil.

Mechanical Constraints

The recovery of sorbent from the water is considered a simple straightforward operation and should not produce undue loss of sorbed oil or severe problems of operation. Heavy debris in the system will degrade not only the system's performance but also the belt by mechanically banging into it and widening screen openings. When the sorbent is picked up, particles on the edge may fall or be blown off the belt under certain conditions particles could tumble and gain enough energy so that, if deflected, they may fall off the belt and land outside the barrier area. This is not considered a major deficiency.

When the sorbent is lifted up to the recovery belt it is then dropped on a horizontal belt leading to the processing equipment. Due to variations in ship designs, the material dropping from the recovery belt to the transport belt can be lost. A very simple mechanical shroud will alleviate this situation.

Conclusions

Sorbent pickup is a relatively simple, straightforward problem. Since it is a mechanical system of a certain degree of fragility operating in the sea, operational problems may develop.

SECTION VIII

RECOVERY OF OIL FROM SORBENT

Introduction

Due to the judicious initial selection of sorbent with the overall project goals in mind, sorbent and oil recovery (separation) after sorption proved to be a relatively simple matter. At first, a simple wringer system was used on oil soaked sorbent; operational difficulties (i.e., maintenance of sorbent feed through the rollers, imposition of adequate pressure between the rollers, and excessive power requirements) eventually led to the abandonment of this approach. A converging conveyor belt wringer was then selected as a more desirable alternative. Laboratory tests bore this out, and, therefore, this approach was selected for the preliminary design of the total system.

Sorbent Recycle

Selection of fully reticulated polyurethane (ester-type) foam has several obvious advantages. In this case, "Scottfoam" is being referred to. Not only do such foams have an excellent capability for oil sorption, but they can also be wrung out successfully in that they maintain their sorption efficiency with reuse and do not degrade mechanically. Table 2, shown on the next page, presents a summary of the results of a recycle experiment illustrating just these points.

For these 100 sorption cycles, the average oil carried by the polyurethane sorbent was 30 grams per gram of dry foam whereas the average oil recovered was 28 grams per gram. The data indicates that sorption and recovery actually improve slightly as a function of number of cycles (for up to the 100 cycles considered). This can only be due to conditioning of the foam material. The polyurethane foam selected for use in the system being developed here are very effective, can be recycled efficiently, and stands up well to the mechanical abuse required by such a system. These positive results point to the relative importance of other factors on sorbent effectiveness (e.g., sorbent losses).

Storability is a factor related to the above considerations. Although it was not considered in as great detail, two useful pieces of information were obtained during the course of the development program. First, storage of dry

Table 2.

Urethane Foam Sorbent Recycling

Cycle No.	Oil* Sorbed (gm/gm dry foam)	% Oil Removed By Wringing	% Oil Retained After Wringing
1	30	89	11
2	31	92	8
3	31	93	7
4	32	93	7
5	31	93	7
10	31	93	7
15	30	93	7
20	30	92	8
25	31	96	4
35	31	94	6
50	31	94	6
76	32	93	7
100	32	93	6

*No. 4 fuel oil at ambient temperatures.

sorbent in a compressed state (for the sack of storage volume conservation) leads initially to decreased sorbent effectiveness, but upon recycling the sorbent quickly recovers to nearly full effectiveness. Initially only about 20 grams of oil are sorbed and released by a gram of sorbent; after about 20 cycles recovery is nearly complete such that 27 grams of oil sorbed and released by a gram of sorbent. On the other hand, pre-oiled sorbent which was stored in a compressed state for an extended period (about 4 months) exhibited both relatively poor effectiveness and recovery properties. Sorption was reduced to about 16 grams oil per gram dry sorbent and increased only slightly upon recycling. This effect can be explained quite simply by a permanent structural change in polyurethane upon prolonged exposure to hydrocarbons while in a deformed state. In conclusion, dry polyurethane foam sorbent may be stored in a compressed state prior to use; pre-oiled (used) sorbent can be stored for further use, but such storage should involve sorbent which has been wrung to as dry a state as possible and remains uncompressed while in storage.

It should be noted that the above development holds for oils other than no. 4 fuel oil with only minor variations. For instance, marine diesel fuel and no. 6 fuel oil exhibit sorption of 32 and 29 grams oil per gram dry foam respectively; the minor differences from no. 4 fuel oil can be attributed entirely to differences in the specific gravities of the hydrocarbons involved. Release of oil from the sorbent foam (as opposed to the consistency of the physical sorption) depends much more importantly on the nature of the oil. This is considered in more detail in the following section.

Sorbent/Oil Recovery

Although the wringer roller recovery system worked fairly well during the bench work discussed above, considerable difficulties arose during tank testing. This led to the conceptual development and bench testing of a converging, dual belt wringer system which will be discussed in the paragraphs which follow.

First, however, it is best to highlight the problems encountered with the wringer/roller system during tank testing:

(1) Most important, constant and positive feed through the rollers was almost impossible to maintain under operational conditions.

(2) Sufficient compression between rollers was achieved only intermittently.

(3) Related to (2), power requirements for the wringer/roller were both highly variable and deemed excessive.

(4) Oil recovery efficiency decreased under operational conditions to 75 to 80% which is comparable to converging, dual belt wringer performance with otherwise much more positive performance (see the discussion below).

In light of the observations just mentioned, a 6 inch wide model of a converging, dual belt wringer system was constructed and tested on a bench scale. Sorbent size (all cubes), belt speed, oil type and belt compression were all factors which were studied. In general, the results of these studies were very heartening, and, therefore, the preliminary design of a full scale system was undertaken. Surprisingly, little difficulty was incurred during these studies with gravity drainage of the oil wrung from the sorbent; this bodes well for full scale operation.

Belt speed has a significant effect on system performance although it is not nearly as severe as might be expected.

Table 3 below presents data on belt speed as it affected the recovery of no. 4 fuel oil.

Table 3.

Oil Removal as a Function of Conveyor Belt Speed*

Belt Speed (FPS)	Oil Removed (%)
0.17	83
0.33	82
0.67	78
1.00	76
1.67	74

*No. 4 fuel oil sorbed and 1" polyurethane cubes with a belt compression of 57 lbs. per foot.

Note that a tenfold increase in belt speed results in only about a 10% decrease in removal efficiency.

Table 4 illustrates the effects of both sorbent size and oil type.

Table 4.

Oil Removal as a Function of Sorbent Size for Several Oils*

Sorbent Size Inch	Marine Diesel Fuel	No. 4 Fuel Oil	No. 6 Fuel Oil
0.25	58	59	54
0.50	72	70	53
1.00	80	77	55

*Cubic polyurethane sorbent, 0.67 Fps belt speed and 57 lbs/ft belt compression.

Sorbent size is seen to effect removal of the lighter oils more drastically than the heavier oils. Removal is good for the more nearly full size (one inch) sorbent in all cases: about 80, 75 and 50% removal for marine diesel fuel, no. 4 fuel oil and no. 6 fuel oil respectively. The differences are attributable to the ease of drainage of lighter oils combined with re-sorption after passing through the wringer.

Compression between converging conveyor belts, like belt speed, has only a minimal effect on oil removal; this, of course, applies only to compression within reasonable limits. Table 5 illustrates the phenomena.

Table 5.

Oil Removal as a Function of Wringer Belt Compression*

Belt Compression (lbs/ft)	Oil Removal (%)
10	66
20	69
30	72
57	77
86	79

*Marine diesel fuel, ½" sorbent cubes and a 2" per second belt speed.

A factor of 9 increase in belt compressive loading leads to only about a 20% increase in removal efficiency. Therefore, within reasonable limits, this factor should be designed with an eye on sorbent mechanical degradation and system power requirements as opposed to oil removal efficiency.

Sorbent/oil recovery using a converging, dual belt wringer device has been shown to be both feasible and a remarkably flexible unit operation.

Alternatives

Two obvious alternative approaches to oil/sorbent recovery present themselves:

First, oily sorbent may just be collected and disposed of. Due to the cost of polyurethane foams, however, this is prohibitively expensive. It is, furthermore, limited to small scale, constrained, labor-intensive spill situations. Obviously a cheaper sorbent (e.g., straw) should be used. The main benefit of the foam is its reusability.

Secondly, batchwise (e.g., wringer press) recovery of oil and sorbent could be used. This could be ideal for the small scale operations mentioned in the previous paragraph but would not be suitable for high capacity operations which should <u>not</u> be labor-intensive.

Conclusions

A converging, dual conveyor belt wringer should be used in a full scale oil recovery system.

Such a device has been shown to work well for a range of oils and to be highly adjustable in terms of throughput. That is, compressive loading and belt speed have only minor effect on wringer efficiency. The nature of the oil recovered and sorbent size are the more important "independent" variables.

Capacities will be more than sufficient with such recovery devices. Using the data of the previous section, the following design capacity is indicated for a 2 foot wide conveyor with a 120 pound compression load and operating at 1½ feet per second on 1" sorbent cubes at 50% belt coverage (something approaching 100% is possible), 2" depth, and saturated with no. 4 fuel oil at ambient temperature:

$$Q = 1.5 \text{ ft/sec} \times 3{,}600 \text{ sec/hr} \times 1/6 \text{ ft} \times 2 \text{ ft} \times 0.50 \text{ (coverage)} \times 0.75 \text{ (removal)} \times 7.5 \text{ gal/ft}^3$$

$$= 5{,}000 \text{ gallons/hour.}$$

Similar capacities for marine diesel fuel and no. 6 fuel oil would be 5,300 and 3,300 gallons/hour respectively.

SECTION IX

TOTAL SYSTEM CONCEPT

Introduction

The preceding sections have outlined in detail the principles and unit operations required in the production of a full scale, high capacity oil recovery system. A much more complete understanding of basic sorption phenomena (from an engineering viewpoint) is now possible. Broadcasting of sorbent materials has been elevated from a speculative art to one containing elements of applied engineering. Sorbent herding and pickup have been described and studied quantitatively. Sorbent/oil recovery has been placed in quantitative relation to the necessary independent variables and, from this, preliminary design and capacity estimates have been made. Tied together, all these factors now permit the design of a full scale system. The preliminary design of such a system is presented in this and the following two sections of this report. This preliminary design provides the base for the final design of a full scale system.

The basic system as conceived during the course of the study under consideration was actually tested on a pilot (¼) scale during an extensive series of tank tests. The basic test system is shown in Figure 11 on the following page. Table 6 on the subsequent two pages, summarizes the results of a series of 32 tank tests aimed at the study of sorption under relatively realistic conditions. This data shows a remarkable variation in performance under similar conditions. This is due to the myriad phenomena which were discussed in detail in Section VI on Sorbent Herding. Nevertheless, recovery effectiveness (amount of the swept slick picked up) ranged from about 50 to 100% for relatively thin slicks (maximum thickness of 0.51 mm as compared to a nominal full scale design value of 1.5 mm). Furthermore, 100% effectiveness could be sustained in the tank tests when operating conditions were selected (reached) properly. Unfortunately, the duration of these tests was such that minor adjustment in conditions was all that was possible once a test had started. Since oil was only very infrequently noticed to bypass the sorbent/boom/pickup system, generally a 100% effectiveness should be possible except in the cases where channel overloading of oil (with respect to possible sorbent throughput) occurs.

The three basic test series, ½ inch cubes and no. 4 fuel oil, 1 x 1 x ½ inch blocks and no. 4 fuel oil, and ½ inch

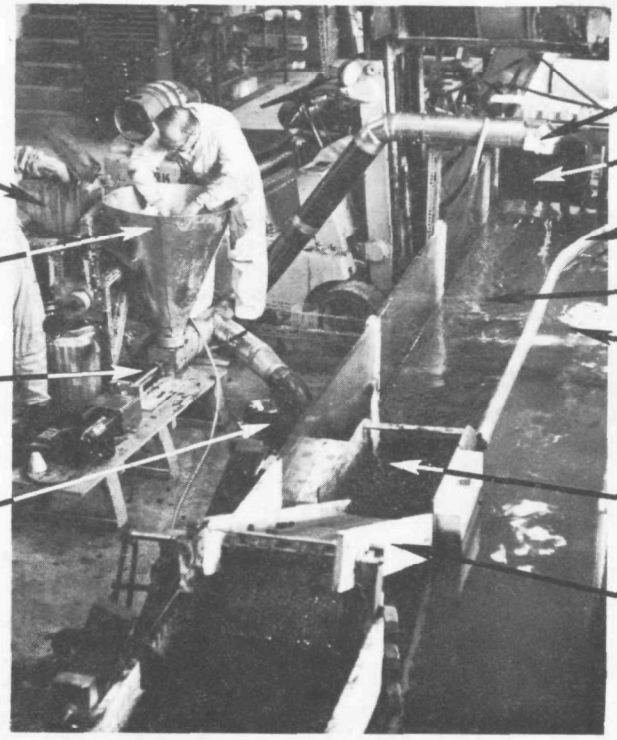

FIGURE 11. PILOT (1/4) SCALE SPILLED OIL RECOVERY SYSTEM

Table 6.

Sorption Wave Tank Test Data

Test No.	Broadcast Rate (ft^3/min)	Slick Thickness (mm)	Surface Current Velocity (knots)	Wave Height (inches)	Contact Time (sec)	Oil Recovery Rate (gpm)	Recovery Effectiveness (%)
			No. 4 Fuel Oil Sorbed with 1/2 inch Polyurethane Foam Cubes				
1	0.67	0.51	0.40	0	61.2	0.805	54
2	0.67	0.34	0.59	0	21.6	0.895	60
3	0.67	0.25	0.79	0	31.0	0.751	50
4	0.67	0.17	0.40	0	63.0	0.265	53
5	0.67	0.08	0.79	0	20.0	0.212	42
6	0.67	0.04	1.58	0	6.2	0.487	97
7	0.67	0.17	0.40	2	81.0	0.527	100
8	0.67	0.08	0.79	2	17.4	0.542	100
9	0.67	0.17	0.40	4	39.0	0.311	62
10	0.67	0.08	0.79	3.5	9.6	0.481	96
11	0.14	0.08	0.79	2	11.9	0.350	70
12	0.33	0.08	0.79	2	11.0	0.525	100
13	0.67	0.08	0.79	2	17.4	0.542	100
14	1.33	0.08	0.79	2	21.2	0.456	91
15	0.67	0.08	0.79	2	17.4	0.542	100
16	0.67	0.17	0.79	2	12.6	0.583	58
17	0.67	0.34	0.79	2	10.1	1.015	51
			No. 4 Fuel Oil Sorbed with 1 x 1 x 1/2 inch Polyurethane Foam Blocks				
18	0.50	0.17	0.40	0	21.9	0.231	46

Table 6.

Sorption Wave Tank Test Data (Cont'd.)

Test No.	Broadcast Rate (ft^3/min)	Slick Thickness (mm)	Surface Current Velocity (knots)	Wave Height (inches)	Contact Time (sec)	Oil Recovery Rate (gpm)	Recovery Effectiveness (%)
19	0.50	0.08	0.79	0	12.4	0.235	47
20	0.67	0.08	0.79	0	10.4	0.239	48
21	0.67	0.17	0.40	0	21.8	0.251	50
22	0.67	0.11	0.59	2	11.9	0.289	58
23	0.50	0.11	0.59	2	4.5	0.343	69
24	0.67	0.11	0.59	4	14.5	0.314	63
25	0.50	0.11	0.59	4	26.1	0.290	58
26	0.50	0.34	0.59	4	18.5	0.550	37
27	0.67	0.34	0.59	4	8.2	1.140	76
SAE 30 Motor Oil Sorbed with 1/2 inch Polyurethane Foam Cubes							
28	0.67	0.08	0.79	0	16.4	0.252	50
29	0.33	0.08	0.79	4	7.9	0.339	68
30	0.33	0.11	0.59	4	15.8	0.404	81
31	0.33	0.23	0.59	0	22.4	0.582	58
32	0.33	0.08	0.79	0	9.6	0.284	57

cubes and SAE motor oil, resulted in average recovery effectivenesses of 76, 55 and 63% respectively. The implications of this are obvious: (1) cubes are more effective than blocks in sorbing and (2) heavier oil are sorbed less effectively. Both these points were also demonstrated on a bench scale as discussed in Section IV of this report. Basic wave tank test data indicates also that waves and apparent contact times do not significantly affect sorption under actual conditions, in fact, waves may enhance sorption slightly. Anyway, the system composed of the basic unit operations as presented in the previous sections works.

Systems Specifications

The following elements must be included in a full scale system:

(1) Broadcasting

(2) Herding

(3) Pickup and transfer

(4) Recovery

(5) Onboard transport

Based on the considerations discussed previously, cut-off screw conveyor broadcasting of sorbent has been selected. See Figure 11.

Sorbent herding will be achieved using existing barrier materials held in place by floats and articulated boom supports.

Sorbent pickup can be effectively achieved using a standard wire mesh conveyor placed in the water at approximately a 30° inclination.

Transfer of sorbent to the deck of the vessel will take place with a similar conveyor.

Sorbent/oil recovery can most positively be achieved using a converging, dual belt conveyor wringing device.

Onboard transport is best done using both a flight conveyor (for high speed, excess lift capability) and a screw conveyor (for basic aft-to-fore transport and connection to the broadcast subsystem).

Figure 12 on the following pages illustrates the total system in plan view. Although all subsystems are constructable using off-the-shelf hardware, some special fabrication will obviously be required. This is especially true for the pickup conveyor and the oil/sorbent recovery device.

Broadcasting

Figure 13 is composed of preliminary drawings of the sorbent feed hopper, aft-to-fore transport conveyor and cut-off screw conveyor broadcaster. The following list identifies the basic elements of this subsystem:

(1) Storage and feed hopper

(2) Leveling screw flights

(3) Tines

(4) "Aft" screw conveyor

(5) U-trough discharges

(6) "Fore" screw conveyor

(7) Cut-off trough discharger

(8) Basic broadcasting screw conveyor

(9) Discharge trough

(10) Screw conveyor sprocket drive

(11) Variable speed drive motor

(12) Right angle transfer drive

(13) Tines and leveling screw device

(14) Structural channel

(15) Remote control panel

(16) Chain guard

(17) Sorbent removal chute

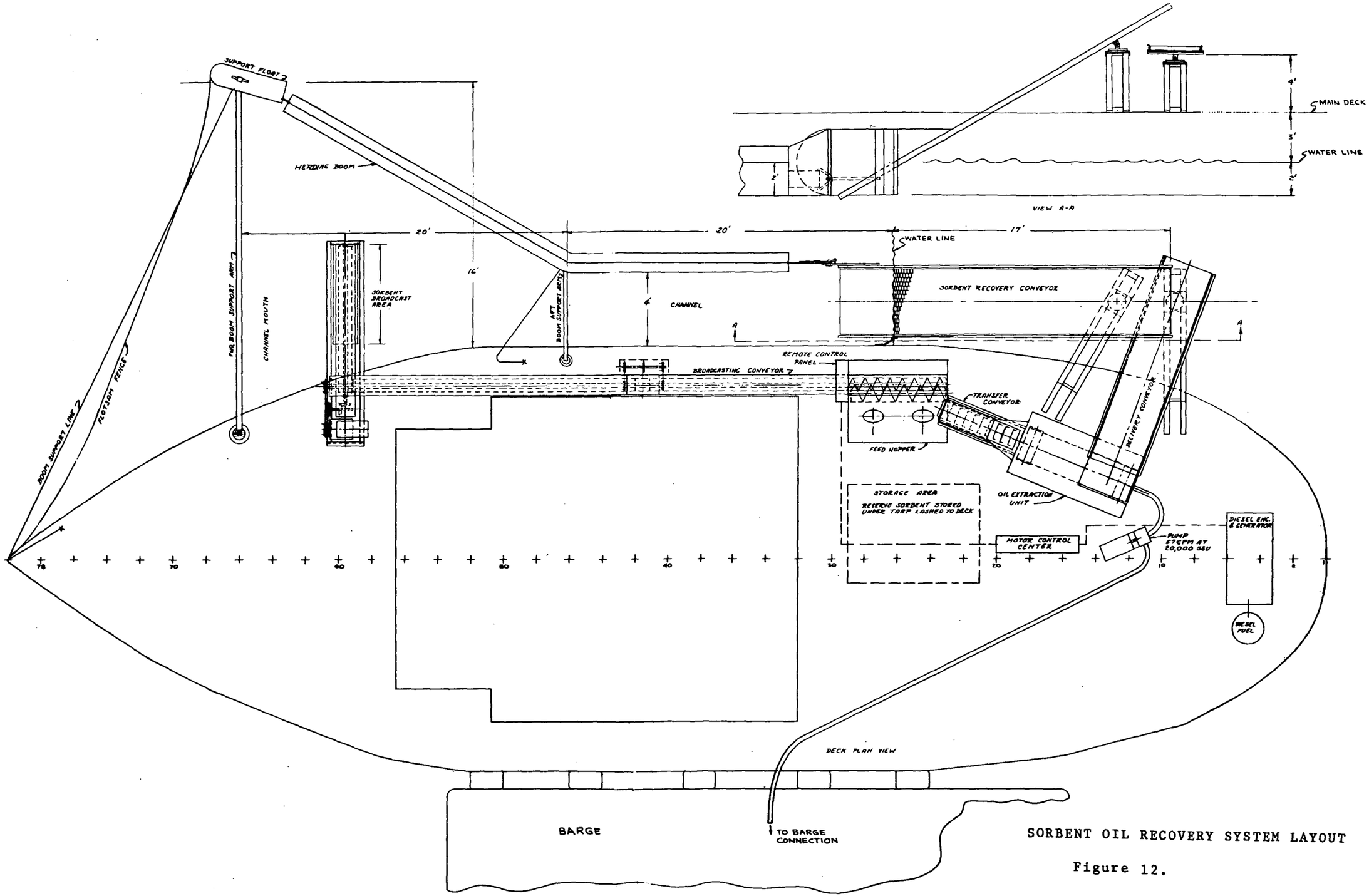

SORBENT OIL RECOVERY SYSTEM LAYOUT

Figure 12.

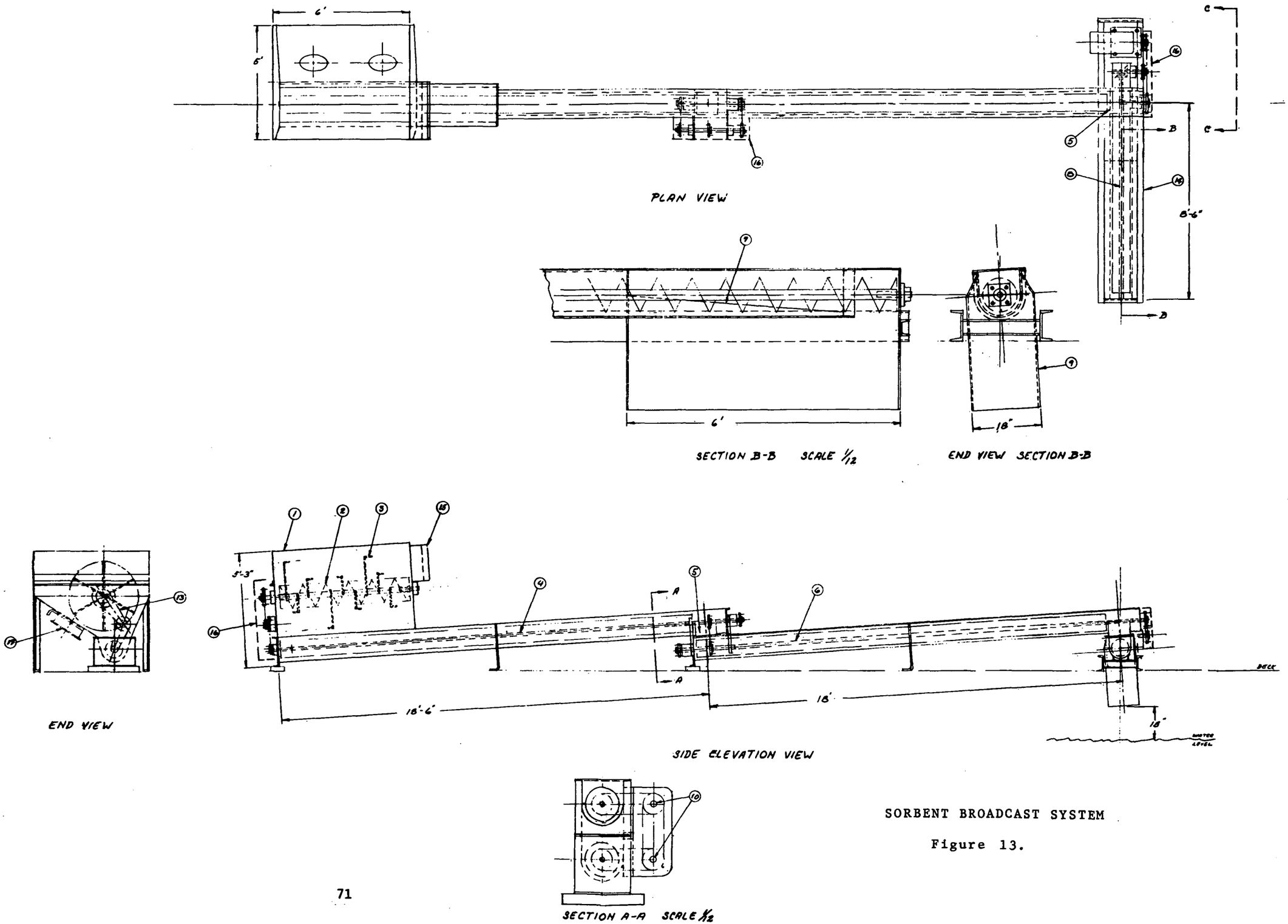

SORBENT BROADCAST SYSTEM

Figure 13.

Herding

The overall barrier subsystem for sorbent herding is adequately presented in the sorbent oil recovery system layout drawing (Figure 12). Some details of this subsystem are not, however, readily apparent from this overall view. These are clarified in the following paragraphs.

Details of the herding boom-support arm interface are presented in Figure 14. The relevant descriptors for this preliminary drawing are:

(1) Float

(2) Shackle

(3) Pin

(4) Herding boom support arm

(5) Post

(6) Belting

(7) D-ring

(8) Herding boom

(9) Cover

The herding boom support arm is detained in Figure 15:

(1) Plate

(2) Pipe

(3) Plate

(4) Plate

(5) Support

(6) Spacer

(7) Bracket

(8) Shaft

(9) Disc

(10) Tube

(11) Eye

(12) Collar

(13) Bolt

HERDING BOOM-SUPPORT ARM INTERFACE

Figure 14.

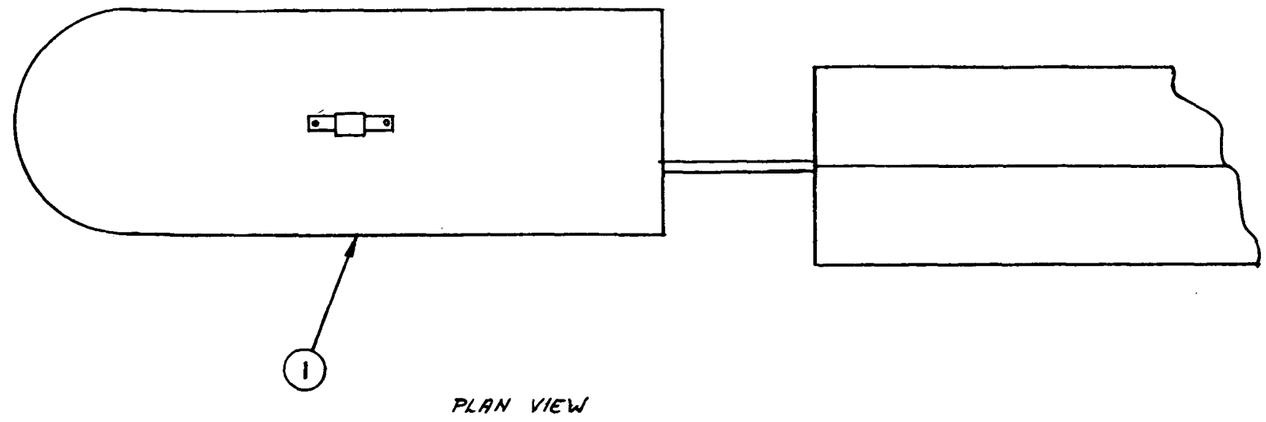

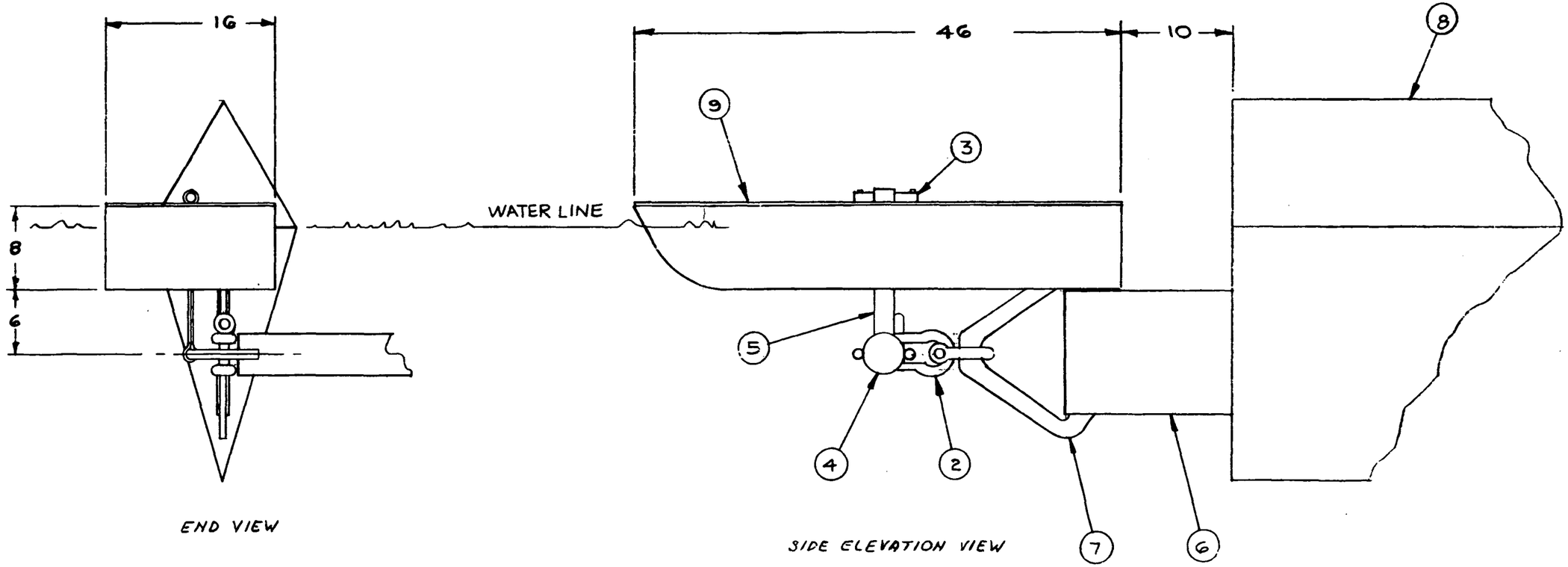

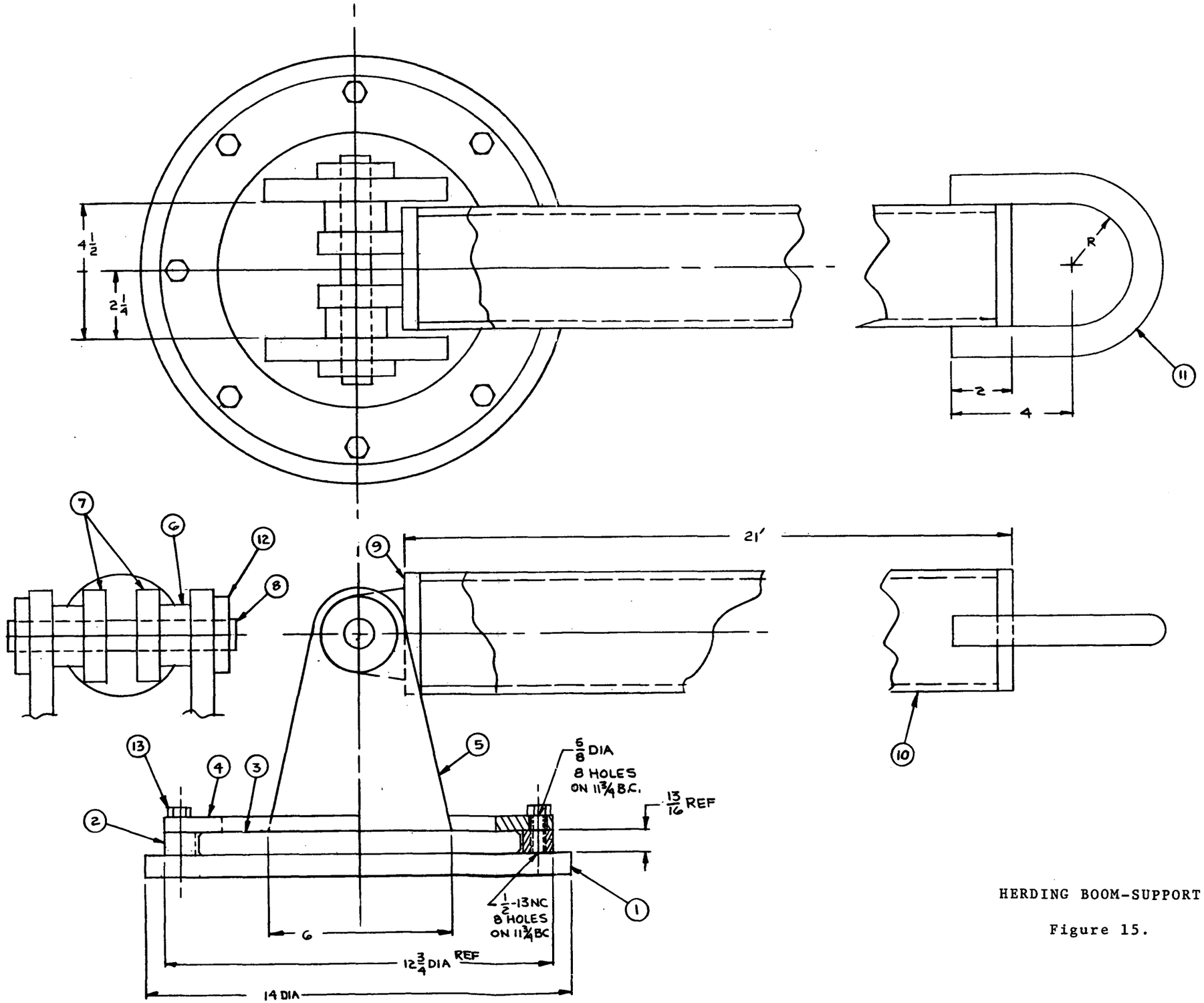

HERDING BOOM-SUPPORT ARM

Figure 15.

The herding boom must also interface with the pickup conveyor in an articulated fashion. Figure 16 details this interface with the following key:

(1)	Bar	(7)	Bolt
(2)	Support	(8)	D-ring
(3)	Wall	(9)	Belting
(4)	Skirt	(10)	Bolt
(5)	Herding Boom	(11)	Flat washer
(6)	Catch	(12)	Hex nut

Pickup and Delivery to Recovery Unit

Figure 17 details the pickup and delivery conveyors which interface to each other and the herding boom and oil/sorbent recovery device respectively. The following items comprise this subsystem:

(1)	Channel	(17)	Plate
(2)	Angle	(18)	Bolt
(3)	Wire Belt	(19)	Bolt
(4)	Wire Belt	(20)	Shaft
(5)	Gear	(21)	Shaft
(6)	Gear blank	(22)	Shaft
(7)	Adjustable speed drive	(23)	Shaft Coupling
(8)	Sprocket	(24)	Motor support
(9)	Chain	(25)	Guard
(10)	Motor	(26)	Small guard
(11)	Rubber pad	(27)	Bottom plate
(12)	Rod	(28)	Scraper
(13)	Shaft	(29)	Cover
(14)	Shaft	(30)	Cover
(15)	Pin	(31)	Pad eye
(16)	Pipe	(32)	Flange bearing

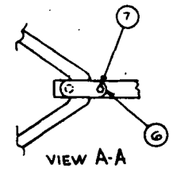

HERDING BOOM-PICKUP CONVEYOR INTERFACE

Figure 16.

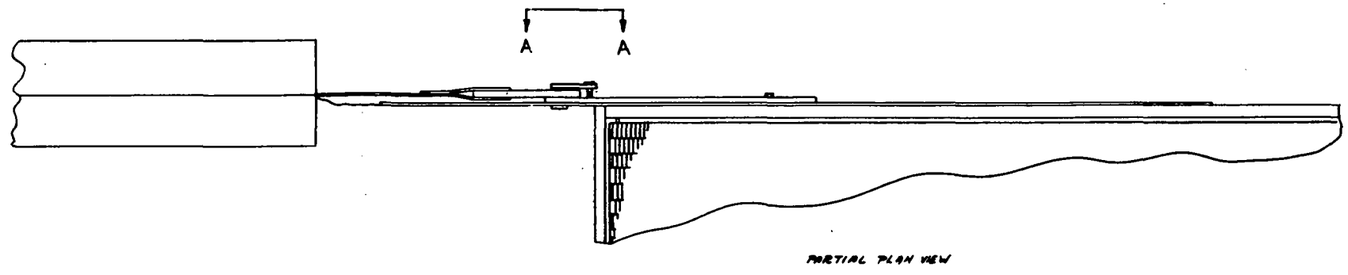

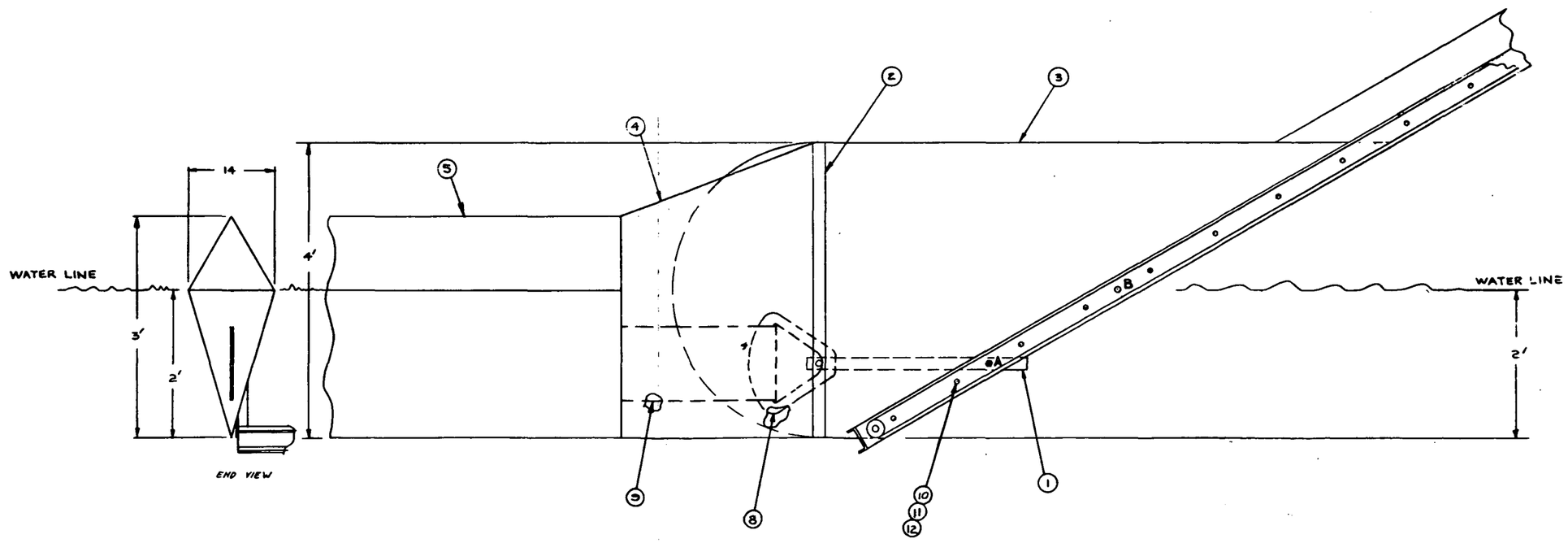

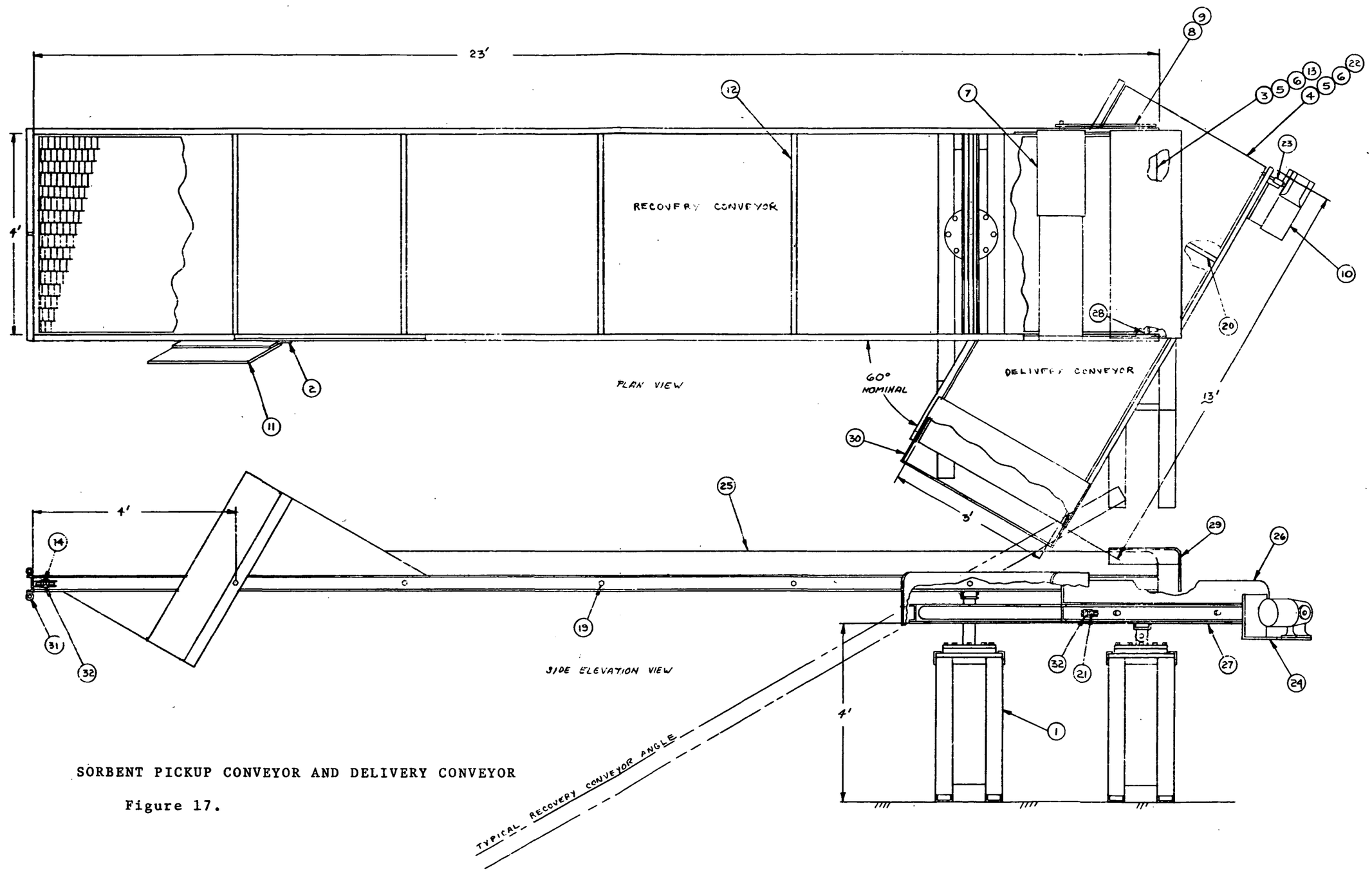

SORBENT PICKUP CONVEYOR AND DELIVERY CONVEYOR

Figure 17.

The pickup conveyor must be supported from onboard the vessel with a type of platform. This is illustrated in Figure 18 on the following pages (the detail items called out refer to the numbers on the above list).

Oil/Sorbent Recovery

The dual converging belt oil/sorbent recovery unit is detailed in Figure 19. The basic, off-the-shelf components which comprise this subsystem are numbered on this preliminary drawing:

(1) Main Conveyor Belt	(15) Idler sprocket
(2) Feed box	(16) Hinge shaft
(3) Head pulley	(17) Belt drive
(4) Tail pulley	(18) Pressure belt
(5) Take-up pulley	(19) Oil sump
(6) Electric Motor	(20) hose coupling & shut-off valve
(7) Tail pulley	(21) Main frame
(8) Brackets	(22) Drive sprockets
(9) Heavy duty shaft	(23) Drive sprocket
(10) Speed reducer	(24) Support angle
(11) Roller Chain	(25) Pillow blocks
(12) Roller Chain	(26) Discharge chute
(13) Idler sprockets	(27) Chain guard
(14) Side plate	(28) Head pulley

Note that a key in the design of this unit is maintenance of equal belt speeds (to minimize sorbent degradation) while still allowing the wringer belts to move apart in the presence of "excess" sorbent or foreign objects.

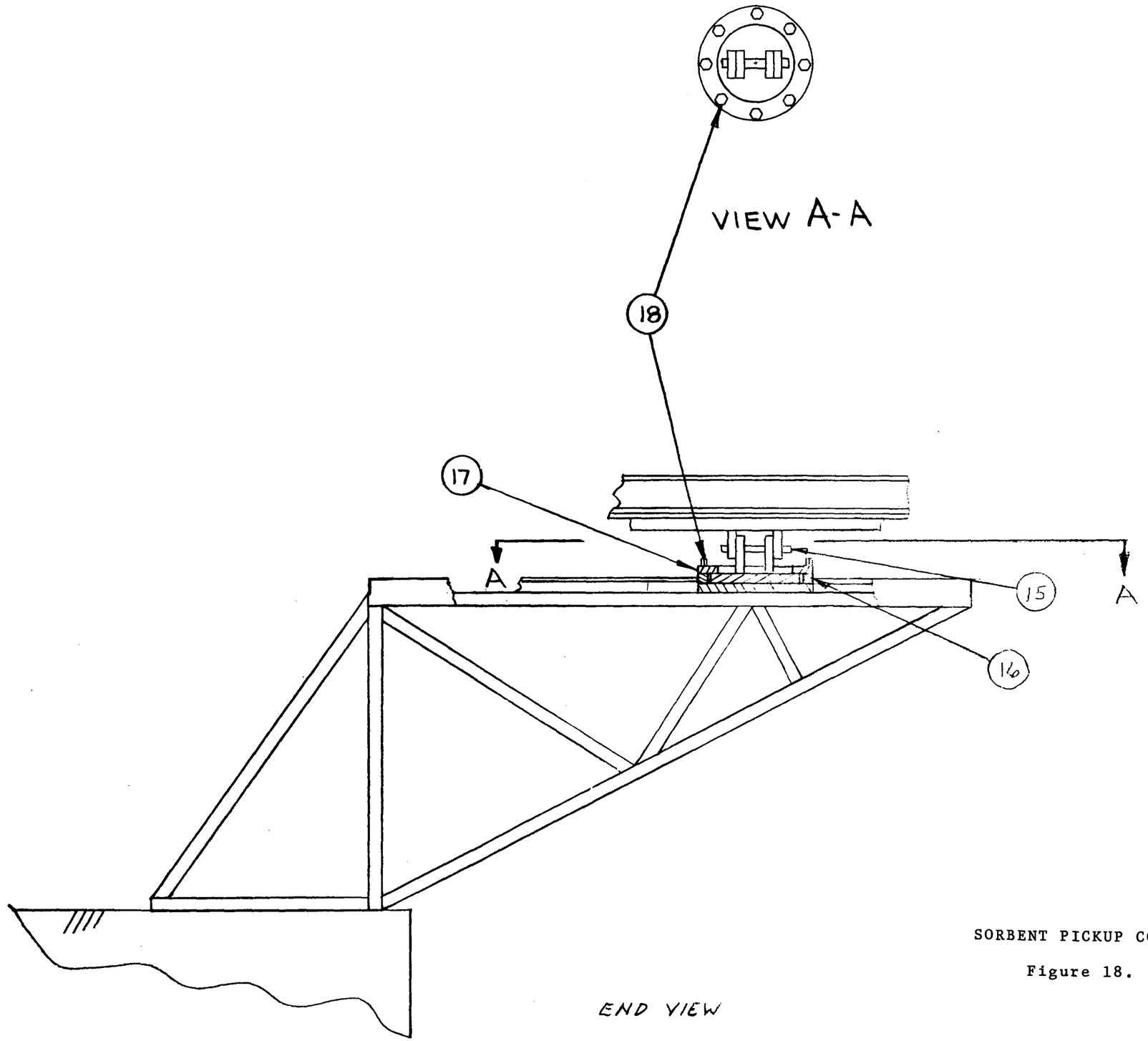

SORBENT PICKUP CONVEYOR SUPPORT

Figure 18.

OIL/SORBENT RECOVERY UNIT

Figure 19.

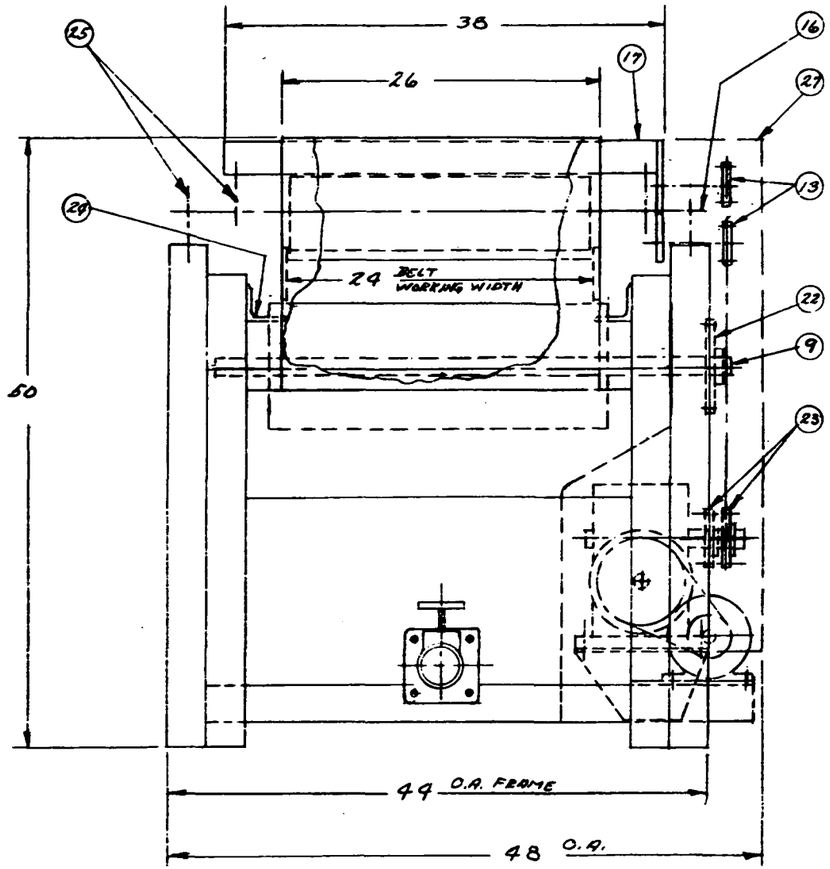

SIDE VIEW

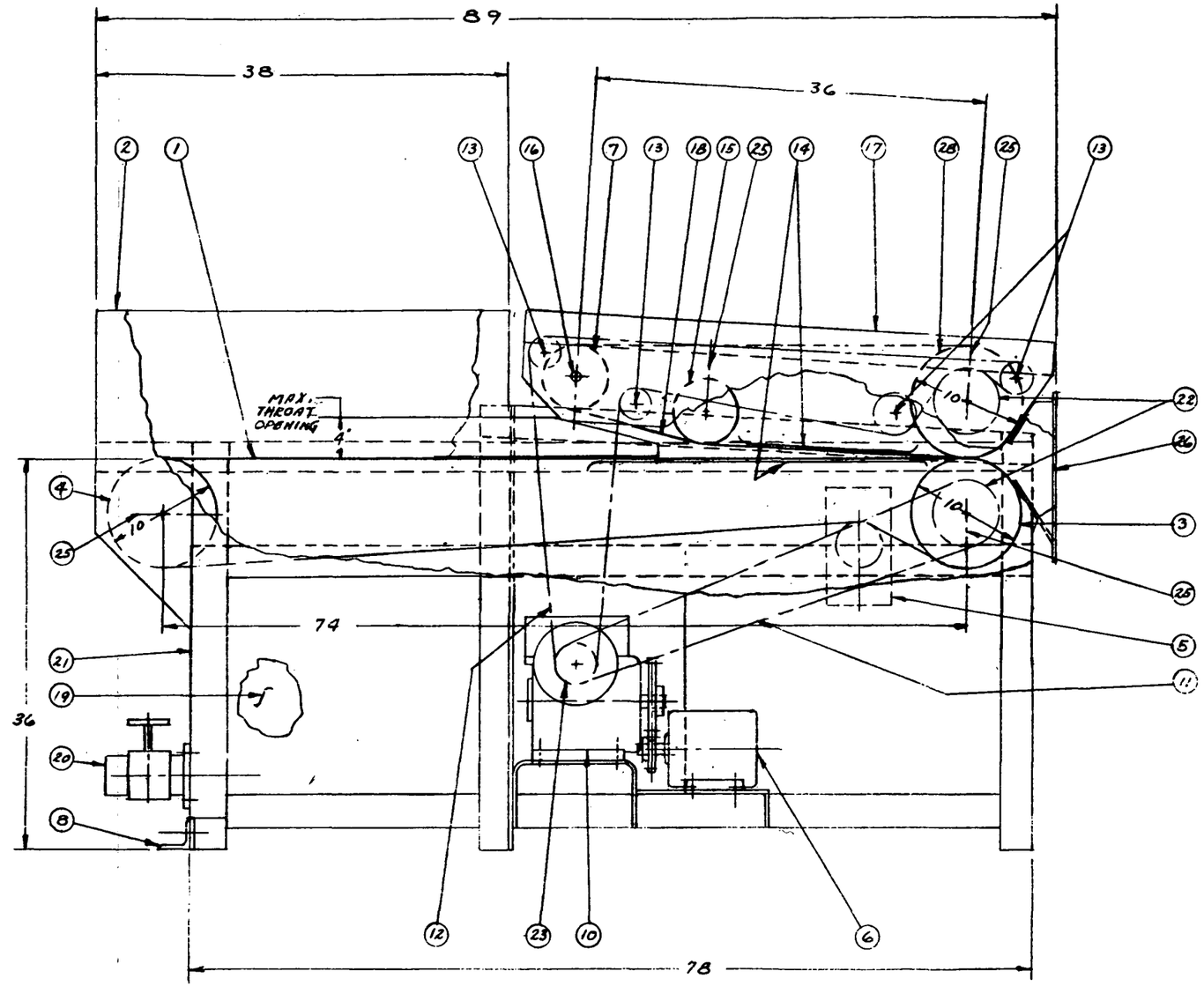

SIDE ELEVATION VIEW

Recovery-to-Broadcast and Aft-to-Fore Transport

Transfer of sorbent from the oil/sorbent recovery subsystem can most readily be achieved using a simple flight conveyor. Figure 20 illustrates such a transfer conveyor. The following detail applies:

(1) Wire belt

(2) Main support frame

(3) Receiving hopper

(4) Canvas cover

(5) Housing

(6) Drive motor

(7) Sprocket drive

(8) Belt head shaft

(9) Discharge chute

(10) Canvas Cover

(11) Upper support bracket

(12) Retaining chain

(13) Lower support bracket

(14) Belt tail shaft

(15) Chain guard

Aft-to-fore sorbent transport is accomplished by screw conveyance as has already been described in this section, under Broadcasting (See Figure 13). This unit operation is essentially integral to the broadcast unit operation.

Sorbent Selection

The sorbent for use in the oil recovery system outlined above has essentially been selected in previous sections of this report. To reiterate:

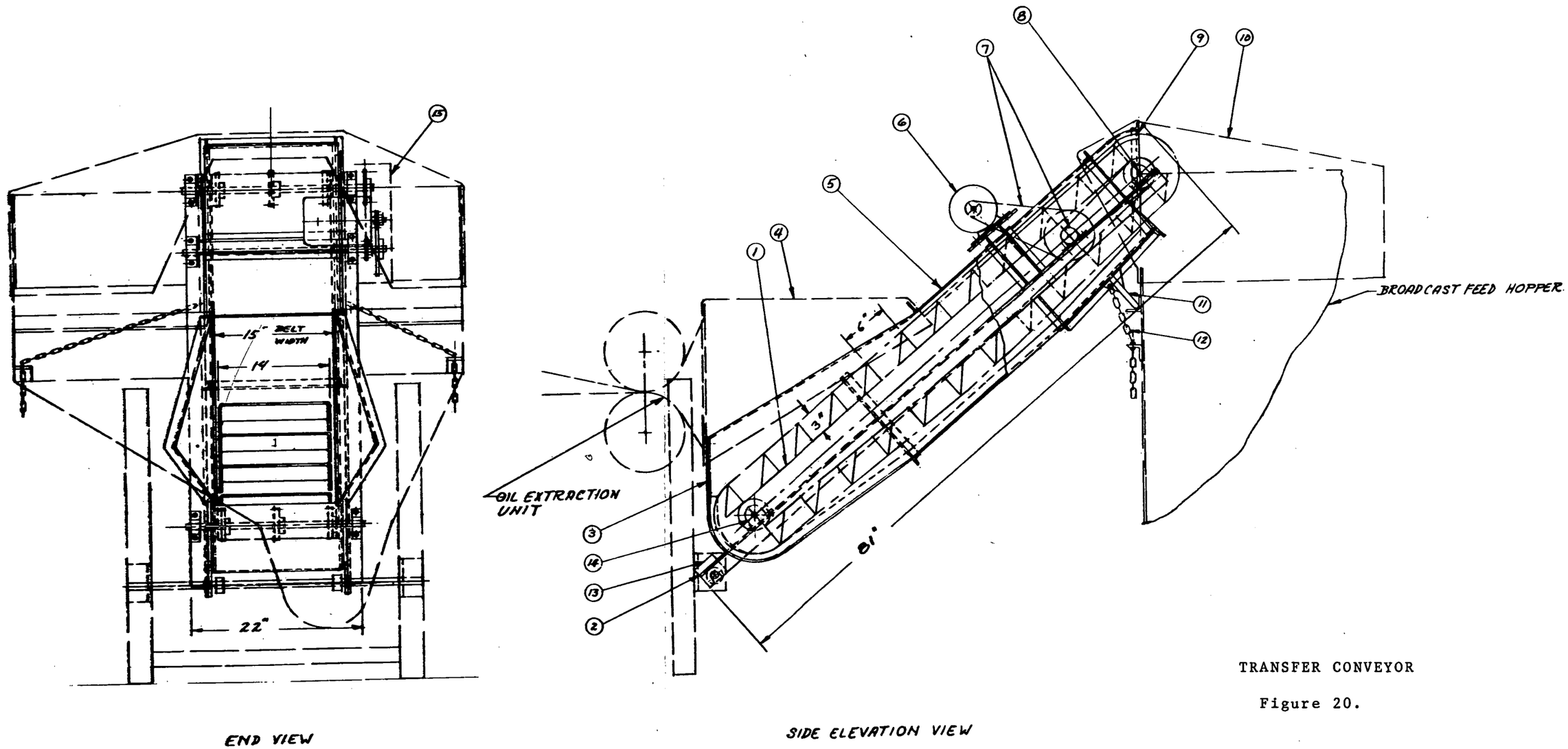

TRANSFER CONVEYOR

Figure 20.

(1) The sorbent must be oleophilic, not degrade upon handling and wringing, and must be capable of extensive reuse (i.e., sorption through 100 to 1000 cycles). Polyurethane foam (ester-type) complies with these requirements in excellent fashion.

(2) Sorbent particles must be sufficiently small to promote rapid oil sorption (with contact times of 15 to 90 seconds) but must be large enough to still be handleable. In isolation, high surface area to volume ratios for sorption make sense. With slick buildup and headwave formation in a herding channel, however, minimum surface area to volume is acceptable. Handleability and movement of sorbent mass are enhanced by using equidimensional particles. Section IV, Particle Size and Shape, demonstrated the adequacy of 1 inch sorbent cubes for a full scale system. This sorbent size and shape promotes maximum sorption efficiency, system effectiveness and sorbent handleability.

(3) Compared to other factors which effect oil recovery using sorbent materials, pore size is of relatively minor importance (see Particle Size and Shape, Section IV). Foam with 100 pores per linear inch is entirely adequate for oils ranging from SAE 30 motor oil to marine diesel fuel. It may be of benefit, however, for very viscous oils or extreme cold weather operations to have coarser foam available: 20 PPI foam is suggested.

Conclusions

A preliminary design for a complete system to recover spilled oil using sorbent materials has been presented. The system includes unit operations for sorbent broadcasting, sorbent/oil mass herding and pickup, oil/sorbent recovery and onboard transport (transfer and aft-to-fore). The proposed system could handle a range of sorbent materials with varying degrees of success. However, based on other considerations, commercial polyurethane (ester-type) foam with 100 pores per linear inch (20 PPI alternate) and cut in 1 inch cubes is included as the system's basic sorbent material.

SECTION X

VESSEL REQUIREMENTS

The ideal boat to meet the requirements for the sorbent oil recovery system is an offshore oil supply boat ranging in length from 125-200 feet. Such boats have the speed, size, maneuverability, depth, deck space, personal accommodations and free board required to meet the specifications outlined in the RFP and generated throughout the study.

Introduction

Boats meeting the following specifications are satisfactory for use with the proposed sorbent oil recovery system:

Length ... 80-200 feet	Width ... 20-40 feet
Draft .... 2-4 feet	Displacement..50-400 ton
Propulsion .. low speed, preferably diesel	Twin screw .. preferably variable pitch
Maneuverability	Single screw .. large rudder ships acceptable
HP 200-2000	Speed ... 12 knots
Endurance...8 hours	Deck Space .. 1000 sq ft
Stability...accept 10,000 lbs of deck weight in combinations	Accommodation .. 8 men
	Free Board .. 2-4 feet
Electrical Power ... preferably 110 or 220 volts, AC and approximately 20 HP.	

A large uninterrupted deck area is ideal for the oil recovery system. A lateral passage on the side of the ship is required for the screw conveyor moving dry sorbent to the broadcast nozzles. In ships not having this free area, it should be possible to cut through deck houses or bulk heads to accommodate the system.

Available Ships

The following ships meet the sorbent recovery systems specifications.

Offshore oil supply boats, 125' to 200'

Powered oil barges 80' or more

Commercial construction tenders 80' or more

Small commercial tugs 100' or more

Fishing boats 80' or more

USCG 100' or larger buoy boats

USCG 100' or larger inland buoy tenders

USCG 115' river buoy tenders

USCG 75' or larger inland construction tenders

Army or Seabee construction or special purpose craft 80' or more

Operations

Not only will the ship operate primarily during daylight hours but it will make long passes to scoop the heart out of an oil slick. Normal procedure will be to stream up or down the current due to the fact that oil slicks orient their long axis parallel to the direction of current flow. Operating at full design efficiency of 3,000 gallons per hour, a maximum of 80 tons of oil would be taken on board per shift. Due to the patchiness and variability of oil slicks thickness during most operations only 10-20 tons of oil may actually be recovered.

Deployment of Recovery System

Once a vessel from which to deploy the recovery system has been chosen, booms and conveyor belts would be mounted on one or preferably both sides of the ship. The other equipment would be installed on the deck and the oil storage capacity for the oil would be maximized. The recovery ship would then move at maximum speed to the slick area where the booms and channels would be deployed followed by system operation.

Since this system is designed to operate at 2 knots where maneuverability is a problem for all ships, twin screws with variable pitch are preferred. The system is designed to operate at up to 4 knots and will be effective in re-

covering lighter oils at these higher speeds.

While wind is expected to be a problem at the low recovery speeds, two foot waves are not. Normal turns should not result in sorbent losses. However, sharp turns or backing will result in sorbent loss. Obviously, sorbent dispersment must be stopped and the sorbent either recovered from the channel before a maneuver is begun or at least all the sorbent must be kept in the channel during the maneuver.

Oil Storage

Oil should be stored, when possible, onboard the ship, in towed tanks or in towed bags rather than in a tanker lashed alongside. This would allow the recovery system to be deployed on both sides of the vessel, thereby doubling the capture area. It would also increase maneuverability and speed of deployment.

The problems of onboard storage are cited in Appendix A, Page 147 and are mainly centered around the fact that 200,000 gallons of 670 tons is difficult to store in the recovery vessel itself. While that is true, it must also be remembered that to recover that much oil would require 100-200 operating hours for a sorbent system. The problem of towed bags not being liftable out of the water can be solved by having barges go to the bags and pump them out until they can be lifted from the water. In an oil recovery project the most important thing is to get the slick contained quickly before it disperses into a relatively unrecoverable state.

Conclusion

The sorbent system recovery requirements can be met by a number of ships in the private and public domain.

SECTION XI

PRELIMINARY PERFORMANCE ESTIMATES

Introduction

The previous sections of this report led from basic considerations of the phenomena and operations involved in sorbent recovery of spilled oil to wave tank testing. Based on the results of these tests and studies, consideration can be given to the preliminary design of a full scale system. The components of this full scale system were specified on the basis of the results of the test program to comply with the overall program goals. At steady-state each of these components must operate in sequence with each of the other components. Their gross performance is, therefore, interdependent. This section recaps the performance estimates of the components and represents their performance in terms of the overall system.

Furthermore, preliminary figures are presented on system capital and operating costs. As will be seen, these figures not only demonstrate a reasonableness for final system development but also provide a possibility of an economic payout for the system based on oil recovered. The latter could prove very helpful in promoting widespread adoption of the proposed approach.

The presentation below does not attempt to preclude more refined estimation of system performance during final design. Rather, feasibility is demonstrated and a brief framework presented within which final design estimates can be made.

Gross Oil Pickup

Oil pickup and recover is limited substantially by the amount of oil which can be swept into and contained by the herding boom of the proposed system as well as by the possible rate of sorbent throughput within the herding channel. Sorbent throughput relates critically to the possible effectiveness of the system in recovering the oil which is swept. The efficiency of the system (i.e., the relative degree to which sorbent is saturated with oil), on the other hand, relates more critically to the other system's parameters.

Oil Throughput

At a design speed of 2 knots with a 16 foot boom mouth and a 1.5 mm slick of no. 4 fuel oil, about 7000 gallons of oil will be swept into the herding channel each hour. The wave tank test data (Section IX, Table 6) indicates that, depending on the exact operation of the system, anywhere from 50 to 100% of this oil will be picked up: 3500 to 7000 gallons per hour. It has been remarked previously that proper system operation (e.g., building up a sorbent/oil "head wave") enhances sorbent efficiency. Therefore, under design conditions the system will be very effective (i.e., will recover the required amounts of oil) whereas sorbent efficiency may vary widely within the range of effectiveness indicated. For preliminary purposes;

System effectiveness:
3500 to 7000 gallons recovered/hour

System efficiency:
50 to 100% of swept oil recovered.

Now, the amount of oil swept by the system is proportional to vessel speed. Recovery, therefore, could almost be double the nominal values called out above since the maximum system speed (based on the hydrodynamic wave tank tests) has been estimated to be about 4 knots. However, the sorption efficiency could be low at higher vessel speeds if little or no sorbent bed can be maintained in the herding channel. This depends on a multitude of factors including (and perhaps most importantly) the competence of the operating crew. Assuming "proper" operation efficiencies could range from 35 to 100% at the maximum vessel speed depending on the presence or absence of waves, nature of the oil, etc.

Oil Type

Both the wave tank tests (Table 6) and benchwork (Section IV, Oil Viscosity and Surface Tension) considered system and sorption with different oil types. For a physical system as that being discussed here, oils can be characterized on the basis of viscosity, density and surface tension. In general,

(1) Higher viscosity oils sorb less readily.

(2) Dense oils sorb less readily.

(3) High surface tension oils sorb more readily.

The results of Sections IV, Oil Viscosity and Surface Tension, and Sorption to Less Than Saturation; and Section IX can be combined during final design work to give estimates of performance as a function of different physical parameters. Note that the interaction of oil and water (e.g., emulsibility) is not covered by the above parameters. In some cases, for instance highly aromatic oils, this could lead to somewhat faulty estimates. Temperature effects are also not included explicitly in the above; in terms of the oil, however, they are included implicitly since the three physical parameters of interest are functions of temperature.

Sorbent Losses and Degradation

A very favorable result of the study under discussion is that, for the proposed system, sorbent losses and degradation are of essentially negligible consequence. Sorbent degradation was not observed during either bench (Section VIII, Sorbent Recycle and Sorbent/Oil Recovery) or wave tank tests (Table 6). Likewise, sorbent losses (given broadcast within the herding channel and not ahead of or in the boom mouth) were negligible except under conditions of very careless system operation - using the non air broadcasting system. A liberal estimate of combined degradation and losses would be an effective 1% loss of sorbent every 100 cycles (5 to 10 hours of operation) through the system. Depending on the relative importance of degradation and actual losses, adjustment for this effective loss could be either just make-up with fresh sorbent or combined sorbent blow-down and make-up. Conservatively, the proposed system would, therefore, be expected to require only about 2 bulk cubic feet of sorbent make-up for every 8 hours of operation.

Preliminary Cost Estimates

The following two sections, Capital Costs and Operating Costs, summarize preliminary estimates of capital and operating cost estimates. Field demonstration of the prototype oil recovery system is not considered although it would be desirable. It should be kept in mind that capital costs for additional systems would be considerably reduced since all engineering design would have been completed on the prototype development. Some elaboration is presented on the operating cost estimate to give an indication of cost effectiveness.

Capital Costs

Labor, material and miscellaneous costs represent the capital necessary to design and construct a full scale prototype oil recovery system.

Labor costs include engineering, construction, supervision, overhead, G & A, fees and major subcontracts.

Material costs include principle equipment items plus minor materials necessary for construction.

Miscellaneous costs include reports, engineering reproduction, travel, per diem, etc.

Subsystem	Element		Estimated Cost
Herding/Pickup	Labor	$42,500	
	Material	16,500	
	Miscellaneous	1,000	
Subtotal			$ 60,000
Broadcast	Labor	$39,500	
	Material	11,300	
	Miscellaneous	500	
Subtotal			$ 51,300
Oil Extraction	Labor	$56,200	
	Material	12,500	
	Miscellaneous	1,500	
Subtotal			$ 70,200
Transfer	Labor	$ 4,000	
	Material	900	
	Miscellaneous	100	
Subtotal			$ 5,000
Sorbent Material	Labor	$ 1,500	
	Material	1,000	
	Miscellaneous	500	
Subtotal			$ 3,000
Power Generator			$ 10,000
Flatbed Trailer			$ 7,000
Shipping and Freight Charges			$ 10,000
TOTAL			$216,500

Operating Costs

Assuming 2 recovery operations each at 10 days (10 hours/day), plus 2 days for start-up and shut-down each year, the following analysis holds assuming a nominal oil recovery rate of 5,000 gallons/hour.

Charge	Yearly Cost
Work boat rental ($300/day x 22 days)	$ 6,600
Work boat crew ($200/day x 22 days)	4,400
Dockside labor (50 hours @ $10/hour)	500
Oil storage barge rental ($200/day x 22 days)	4,400
System transport (4 trips @ $500)	2,000
Sorbent make-up	100
Maintenance (1% of capital cost)	2,200
Burdened recovery system labor (3 men @ $100/day x 22 days)	6,600
Field costs (per diem @ $1,500, travel @ $1,200)	2,700
Miscellaneous field expenses	2,000
Recovery system charge (20 year payout at 8%)	25,000
System management (30 days @ $100/day)	3,000
TOTAL	$59,500

Now, the total oil recovered by this assumed operation is:

$$Q = 5,000 \times 10 \times 20 = 1,000,000 \text{ gallons}$$

The recovery cost is, therefore, about 6¢ per gallon which is very feasible compared to fuel oil costs (about 12 to 20¢/gallon depending on grade) and just about a break even based on crude oil values (ten to fifteen dollars per ton).

Given the assumptions involved, it seems probable that the full scale recovery system as presently conceived could actually pay for itself based on the salvage value of recovered spill oil. This becomes even more likely if service charges are assessed for the use of the system based on avoidance of environmental impact.

Conclusions

In terms of the above discussion, the following have been demonstrated:

(1) In line with the design goals, the proposed system will be highly effective: 3,500 to 14,000 gallons/hour oil recovery.

(2) Depending on operating conditions, the system will be from 35 to 100% efficient.

(3) In addition to the above, the capital and operating costs for the system appear to be reasonable: $216,500 and $59,500 per year respectively.

(4) Also, there appears to be a chance that such a system can be economically self-sufficient based on the value of the oil spilled.

SECTION XII

APPENDICES

A P P E N D I X

A

OCEAN SYSTEMS, INC.

AFFILIATE OF UNION CARBIDE CORPORATION AND THE SINGER COMPANY

11440 ISAAC NEWTON INDUSTRIAL SQUARE NORTH, RESTON, VIRGINIA 22070

TELEPHONE (703) 471-1310
TELEX 899442

May 2, 1972

Meloy Laboratories, Inc.
6631 Iron Place
Springfield, Virginia 22150

Attention: Mr. Garth Gumtz

Subject: Subcontract A3669 under EPA Contract No. 68-01-0068

Enclosure: (1) Preliminary Design of an Oil Recovery System Using Sorbents

Gentlemen:

Ocean Systems, Inc., submits enclosure (1) in accordance with Article III, Reports, of the subject contract. The five (5) drawings called out in the table of contents are not included with this submission as they were delivered previously.

The budgetary price estimate called out in the scope of work will be delivered on May 3, 1972. At that time all work required by the subject contract will have been accomplished.

It has been a pleasure working with you on this program and we look forward to the possibility of working with you in the near future.

Very truly yours,

OCEAN SYSTEMS, INC.

Dale E. Bellovich

Dale E. Bellovich
Contract Administrator

DEB:ds

cc: R. Pasquale

OFFICES: NEW YORK, N.Y. • WASHINGTON, D. C. • TARRYTOWN, N.Y. • RIVIERA BEACH, FLA. • MORGAN CITY, LA.
SANTA BARBARA, CALIF. • SEATTLE, WASH. • LONDON, ENGLAND • HOUSTON, TEXAS • NASSAU, BAHAMAS • STAVANGER, NORWAY

A JOINT MELOY LABORATORIES AND OCEAN SYSTEMS, INC. PRELIMINARY DESIGN OF AN OIL RECOVERY SYSTEM USING SORBENTS

Submitted by

Ocean Systems, Incorporated
11440 Isaac Newton Industrial Square, North
Reston, Virginia 22070

May 2, 1972

In response to Subcontract A 3669 to
Meloy Laboratories Under EPA Contract 68-01-0068

TABLE OF CONTENTS

Section		Page
1	INTRODUCTION	113
2	GENERAL SYSTEM DESCRIPTION	114
3	PRINCIPAL SYSTEM DIMENSIONS AND ASSUMPTIONS	119
4	COMPONENT PRELIMINARY DESIGN DESCRIPTION AND RATIONALE	124
	4.1 Herding Boom	125
	4.2 Recovery and Delivery Conveyor	136
	4.3 Recovery Vessel	141
	4.4 Oil Storage and Sorbent Disposal	147
	4.5 Oil Transfer System	152
	4.6 Flotsam Fence	153

Applicable Original OSI Drawings Delivered Separately

Title	Size	Number
Sorbent Oil Recovery System Layout -	E	001569
Herding Boom-Support Arm Interface -	D	001570
Herding Boom-Support Arm -	D	001571
Herding Boom-Recovery Conveyor Interface -	D	001572
Sorbent Recovery Conveyor and Delivery Conveyor, Sheets 1 and 2 -	D	001573

SECTION 1

INTRODUCTION

Ocean Systems, Inc., in accordance with Subcontract Number A3669 to Meloy Laboratories, under EPA Contract 68-01-0068, was tasked with developing a preliminary system design for harvesting sorbents, and developing the vessel or platform and the storage of 200,000 gallons of oil and the disposal of the sorbents used in the recovery system. In addition, Ocean Systems, Inc. provided technical support to Meloy Laboratories, Inc. in the overall development of a preliminary design of a system for recovering oil from the surface of protected waters using sorbents. The interim report submitted in January 1972 covered the overall progress and results of Tasks 1, 2, 3, and 4 which included model tests in the OSI test tank under various current and sea conditions.

The overall objective of the oil recovery system was to provide a system capable of recovering 1500 gal/hr of oil with 10% or less water content, with the potential to increase this to 3,000 gal/hr. Oil to be recovered will have a viscosity range from that of light diesel oil to near water density of heavy asphalt at 20°C.

The interim report covering Tasks 1, 2, 3, and 4 has been used in completing Task 5, which is the preliminary design of the harvesting sub-system, the deploying vessel, the storage of 200,000 gallons of oil and the disposal of the sorbents used in the recovery system. These elements have been interfaced and integrated with the preliminary design of the sorbent broadcasting, oil sorbent separation and sorbent reuse sub-systems which were developed by Meloy Laboratories.

SECTION 2

GENERAL SYSTEM DESCRIPTION

The complete oil recovery system consists of the herding boom, the sorbent recovery conveyor, the delivery conveyor, the oil extraction unit, the transfer conveyor, the feed hopper, the broadcasting conveyor, the vessel and the oil storage system. These are shown on Drawing 001569.

The general description of the herding boom, the recovery and delivery conveyor, the recovery vessel, the oil storage and sorbent sub-system, the oil transfer system and the flotsam fence will be covered in this section. The detailed description of these components is found elsewhere in this report.

Herding Boom

The herding boom consists of a triangular floating surface section which is one foot above the waterline and a triangular subsurface section which is two feet deep. The latter absorbs the water and acts as a "dynamic keel". The combined action of the two sections causes the herding boom to conform closely to the surface of the water. The herding boom gathers and contains the sorbent cubes which absorb the oil as they travel toward the recovery conveyor. The forward end of the herding boom is attached to a float that is maintained approximately 16 feet from the vessel, by a rigid arm. The after end of the herding boom is attached to the outboard side of the recovery conveyor which is four feet from the side of the vessel. The herding boom gradually converges to a distance of four feet from the ship and continues at this distance until it joins the recovery conveyor.

Recovery and Delivery Conveyors

The recovery conveyor picks up the oil soaked cubes and deposits them to the delivery conveyor which in turn delivers them to the oil extraction unit. The conveyor consists

of a four foot wide stainless steel flexible wire belt driven by a variable speed electric powered unit. It is 23 feet long and pivots on a rotating foundation with two degrees of freedom. The conveyor terminates two feet below the waterline and is secured to the side of the vessel with an adjustable hogging line.

The delivery conveyor is constructed in a similar manner, but is driven with a constant speed electric drive. It is 13 feet long and is mounted on a foundation with two degrees of freedom.

Recovery Vessel

The recovery vessel must be large enough to accommodate the equipment and long enough to permit the recovery system to operate effectively. At the same time the draft must not be excessive so that it can operate in shallow waters. These are conflicting requirements. In addition, the vessel must be capable of operations at low speeds, i.e., about 1.5 to 2 knots.

The oil recovery system is approximately 60 feet long. An additional 10 feet is required at each end for installation and working space. Therefore, the minimum length of the ship is 80 feet. To accommodate the equipment and to provide operating space, the vessel must have at least 1000 square feet of clear deck area. Most of it should be aft since most of the equipment will be located there.

The vessel also must have a clear area inboard to accommodate the broadcasting conveyor. Normally passageways alongside the deck house will be adequate. If there are no passageways, deck compartments can be cut out to accommodate the equipment.

A number of vessels of opportunity can be used to deploy the system. One of the best vessels is the offshore supply ship which has a long uninterrupted deck area and a relatively shallow draft. The characteristics and type of vessels that are suitable to act as deployment vessels are given in Section 4.3.

Oil Storage and Sorbent Disposal

Oil Storage

Oil storage is divided into two parts. The first is oil storage during recovery operations and the second is storage of the oil ashore or afloat after recovery.

The storage of oil during recovery operations aboard the recovery vessel is not feasible except in the case where a powered tanker barge is used. A small oil barge will normally be used to receive the recovered oil. The barge will be moored alongside the vessel during operations. When it is full or if the draft becomes excessive, it would be replaced by another barge. In some cases the barge may be kept alongside until the recovery operations are completed. The storage of 200,000 gallons of recovered oil would require a relatively small barge, i.e., 670 tons.

Storage of the recovered oil after the operation is best accomplished afloat in an oil barge that can be moored near to the scene of operations. In nearly all instances, the storage of the contaminated oil at available shore facilities is not possible because this oil would contaminate the installation. The contamination of an oil barge is acceptable because it can be readily cleaned after the recovered oil is transferred to an appropriate oil processing activity.

A full discussion of oil storage appears in Section 4.4.

Sorbent Disposal

Sorbents will be stored in strong polyethylene bags. These can be utilized for storage of used as well as new cubes. The bags have the advantages of low cost, light weight, resistance to oil, occupy very little space when empty and can be readily stored in irregular spaces.

It is recommended that used cubes be stored and reused unless operational experience proves otherwise.

Oil Transfer System

It will be necessary to pump the recovered oil from the sump of the oil extraction unit to the barge alongside.

The pump selected was a Blackmer Multi-Vane GXS2-1/2 pump driven by a 5 HP electric motor.

The hose that will be used is a Heliflex 2-1/2 inch hose.

Both the pump and the hose are suitable for handling petroleum products.

A full description of the oil transfer system appears in Section 4.5.

Flotsam Fence

A flotsam fence will be required in areas where flotsam can be introduced into the recovery system.

The flotsam fence is made of Flat-Flex wire belt 3/4" mesh x .092 wire. The fence will be 24 inches wide of

which 8 inches will be above the water and 16 inches will be below the water.

A full description of the flotsam fence appears in Section 4.6.

SECTION 3

PRINCIPAL SYSTEM DIMENSIONS AND ASSUMPTIONS

To arrive at a preliminary design for the oil recovery system using sorbents, certain initial base values or assumptions were made. These assumptions were based on data obtained during the earlier phases of the contract. Specifically, the following assumptions were made:

Sorbent size	=	1 inch cubes
Sorbent loss	=	.5% (per cycle)
Slick Thickness	=	1.5 mm (#4 fuel oil @ 20°C)

Initial calculations indicated that a volume flow rate of 20 bulk ft^3/min should satisfy the requirement of a minimum of 1500 gal/hr of oil recovered.

In determining the principal system dimensions the following two equations were used. These equations predict the quantity of oil recovered as a function of several parameters.

[1] $Q_F = (C)(W)(h)(k_1)(k_2)$

[2] $Q_O = Q_F\ (\xi_1)(\xi_2)(\xi_3)$

Where Q_F = Sorbent flow rate down channel (ft^3/min)
C = Current velocity (ft/min)
W = Channel width (ft)
h = Cube height (ft)
k_1 = Area density ratio of cubes in the channel
k_2 = Ratio of sorbent velocity to current velocity
Q_O = Oil pick-up rate (ft^3/min)
ξ_1 = % sorbent retained after each cycle
ξ_2 = % of oil and water recovered by volume
ξ_3 = % of oil recovered by volume

Equation [1] gives the sorbent flow rate down the channel and up the conveyor. Equation [2] gives the oil pick-up rate as a function of the sorbent flow rate. The parameters C, W, and h are fixed with the remaining parameters a function of the operating conditions.

Specifically, the variable parameters k_1, k_2, ξ_1, ξ_2, and ξ_3 are a function of the channel geometry, current speed, sea state, oil properties, sorbent properties, and the contact time.

The hydrodynamic tests conducted by Meloy Labs, Inc. and Ocean Systems, Inc. in Ocean Systems' wave and current tank were accomplished in order to gain an understanding of the functional relationships of the parameters involved. With these relationships known it is possible to determine the physical dimensions of a system which will provide a specified oil recovery rate.

The interim report documented the results of the hydrodynamic tests and these results are used to determine the physical dimensions of the system. Specifically, all the parameters above are determined for a desired oil flow rate using the data contained in the interim report.

In determining the physical dimensions of the sorbent recovery system, some initial basic assumptions were made based on the experience gained during the testing phase. These assumptions fixed specific parameters in order to determine the remaining parameters, i.e.,

$$\left.\begin{aligned} h &= 1 \text{ inch } (.0833 \text{ ft}) \\ Q_F &= 10 \text{ ft}^3/\text{min } (20 \text{ bulk ft}^3/\text{min}) \end{aligned}\right\} \text{(Specified by Meloy}$$

$$\left.\begin{aligned} k_1 &= .5 \\ k_2 &= .3 \end{aligned}\right\} \text{(Estimate from Interim Report)}$$

From Equation [1]

$$(C)(W) = \frac{Q_F}{(h)(k_1)(k_2)} = \frac{10}{.0833 \times .5 \times .3}$$

$$C\ (W) = 780$$

$$C'(W) = 7.9 \quad (C' = \text{current speed in knots})$$

The above relationship indicates that for a channel width of 4 feet, the current velocity must be equal to or greater than 2 knots to provide a foam flow rate of 10 ft^3/min.

In determining the oil flow rate the values of ξ_1, ξ_2 and ξ_3 must be determined. Based on the results of the test program $\xi_1 = .995$ and $\xi_3 = .95$ by assumption. ξ_2, however, is dependent on the slick thickness in the channel, contact time, and the oil's properties. For #4 fuel oil, Figure 2.3.5 of the interim report indicates the slick thickness in the channel is on the order of 5 times the undisturbed slick thickness for a model current speed of approximately 1/2 knot. This represents a prototype current velocity of approximately 1 knot. For a prototype current velocity approaching 2 knots the ratio of the channel slick thickness to the undisturbed slick thickness will be greater than 5. Meloy Labs, Inc. has determined that for slick thickness in the order of 4.5 mm or greater (a ratio of 3) that 100% sorbtion of oil will occur in less than 5 seconds. (#4 fuel oil @ 20°C). Selecting a channel length of 20 feet, the contact time in the channel will be a minimum of 6 seconds with the sorbent particles flowing at the same speed as the current for a maximum current speed of 2 knots. This insures that 100% sorbtion will occur resulting in ξ_2 equaling approximately 1.0. In reality, the sorbent velocity will be less than the current velocity, thus increasing the contact time and further insuring that 100% absorption occurs. Substituting these values back in Equation [2] we have:

$$Q_O = Q_F\ (\xi_1)(\xi_2)(\xi_3)$$

$$\text{with } Q_F = 10 \text{ ft}^3/\text{min (maximum)}$$
$$\xi_1 = .995$$
$$\xi_2 = .95$$
$$\xi_3 = 1.0$$

$$Q_O = 9.45 \text{ ft}^3/\text{min}$$
$$= 70.5 \text{ gal/min}$$
$$= 4230 \text{ gal/hr (maximum)}$$

These calculations indicate that a channel width of 4 feet and a channel length of 20 feet will be more than adequate to provide an oil recovery rate of 3000 gal/hr for #4 fuel oil @ 20°C at a vessel speed of 2 knots.

In the above calculations the values for k_1 and k_2 were based on results contained in the interim report. The value k_1 represents the percentage of water surface area covered by the sorbent particles in the channel and k_2 represents the ratio of the sorbent velocity to the current velocity. Figure 2.3.7 of the interim report indicates that k_2 will equal 0.3 for geometries where the mouth width of the boom is 4 times the channel width. This represents a prototype system with a mouth opening of 16 feet and a channel width of 4 feet for #4 fuel oil. The results of Figure 2.3.7 were obtained from tests where the model current speeds were 1/2 knot or less representing prototype current speeds of 1 knot or less. It was noted, however, that for higher current speeds the value of k_2 increases indicating that the estimated value of k_2 is a minimum and in practice should be greater. The value of k_1 is difficult to predict but on the average it will be equal to or greater than 0.5.

With the values of k_1 and k_2 being minimums, and the oil pick-up rate (Q_0) being larger than required, the ship's speed or current speed required for the desired oil recovery rate will be equal to or less than 2 knots. In addition a mouth width equal to 4 times the channel width is desirable.

In summary, the system with the following characteristics should provide an oil recovery rate greater than 3000 gal/hr with #4 fuel oil at 20°C providing that sufficient oil is available to be recovered.

Channel width	=	4 feet
Channel length	=	20 feet
Mouth width	=	16 feet
Ship's speed range	=	1 to 2 knots

SECTION 4

COMPONENT PRELIMINARY DESIGN DESCRIPTION AND RATIONALE

SECTION 4.1

HERDING BOOM

The most effective means for "herding" both sorbents and oil is through the use of an oil containment barrier. An oil containment barrier designed by Ocean Systems, Inc. is particularly suited to the proposed system and has been chosen as the most viable herding boom.

The barrier concept is based on the use of flexible polyurethane foam, with a "dynamic keel" that imparts high static and dynamic stability. The barrier consists of a non-water-absorbing foam package that provides buoyancy and a surface barrier and a water-absorbing foam package that provides a submerged barrier and serves as a "dynamic keel". The two packages are connected into an integral unit forming the barrier. Figure 1 shows the construction of the barrier.

The unique feature of the barrier is the achievement of stability and buoyancy utilizing readily available seawater. Although the "dynamic keel" is essentially weightless in water, the large displaced volume of the trapped water and the large waterplane area provide excellent sea conformance characteristics.

Both the top and bottom sections have triangular shaped cross sections. The top section is an equilateral triangle with a one foot altitude and the bottom section an isosceles triangle with a two foot altitude. The triangular shape offers a large waterplane area which is essential for good dynamic response. Also, the triangular cross section is an optimum structural shape and is relatively easy to fabricate. The physical dimensions reflect both functional and operational requirements.

The flotation section is constructed of flexible polyether foam to which is applied a flexible urethane elastomer coating. The resultant structure is flexible,

BARRIER SCHEMATIC

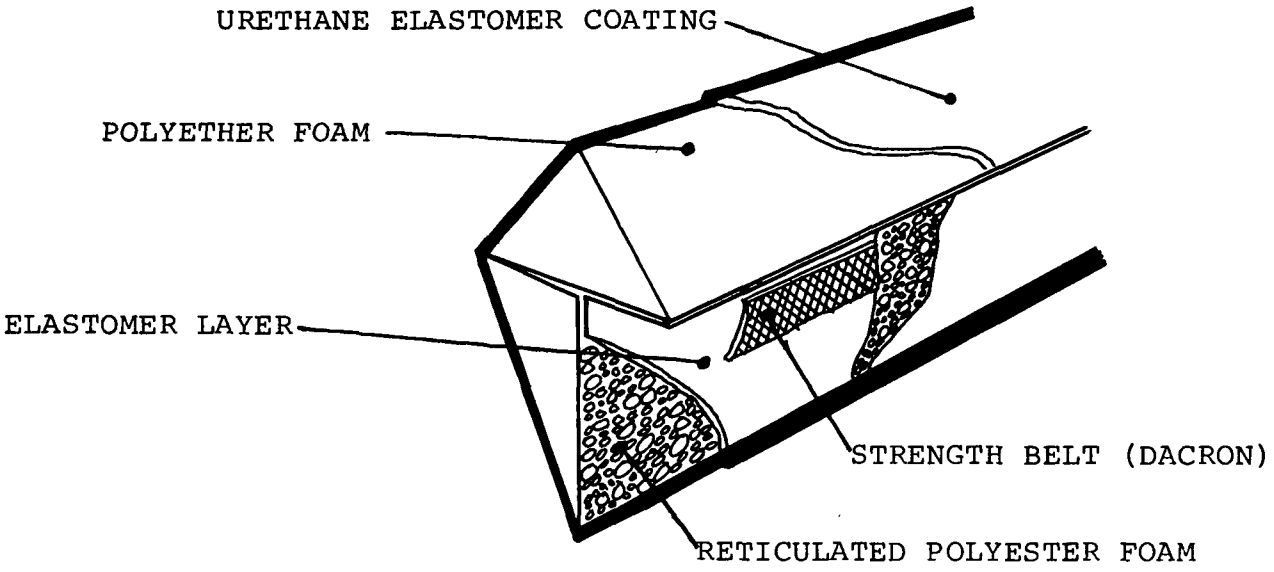

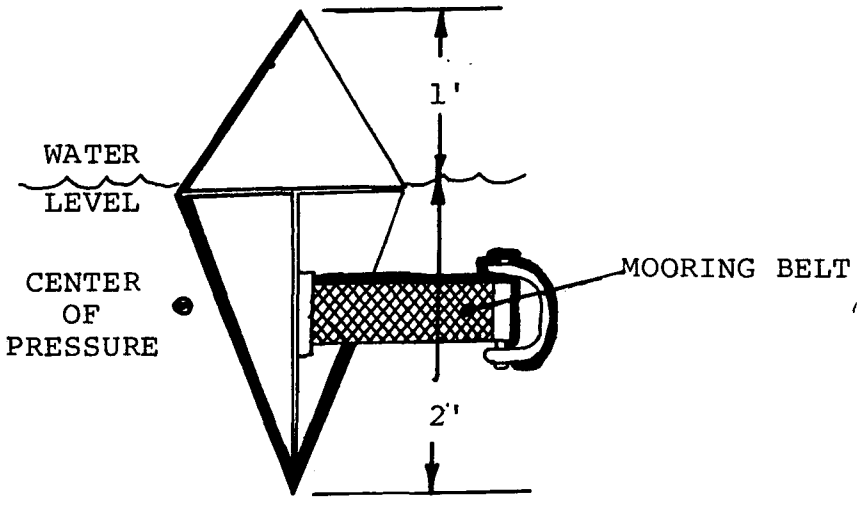

highly buoyant, and has a very high resistance to oils and abrasion.

The bottom section is constructed of a specially treated reticulated polyester foam, which absorbs water and serves as a "dynamic keel". Polyester foam is highly flexible and has very good resistance to oils. The bottom section is joined to the top section with the same type of urethane elastomer used for the top coating.

The structural belt that runs longitudinally in the center of the lower section is made of dacron webbing. Dacron was selected for the belt material because of its high strength and low stretch properties. Low stretch in the belt material is required to reduce the amount of differential elongation between top and bottom sections of the modules when the barrier is under axial load. The structrual belt is joined to the foam bottom sections with urethane elastomer.

The cross sectional properties of the boom are as follows:

Dimensions

L = 12 inches
θ = 30 degrees
t = 40 mil (avg)

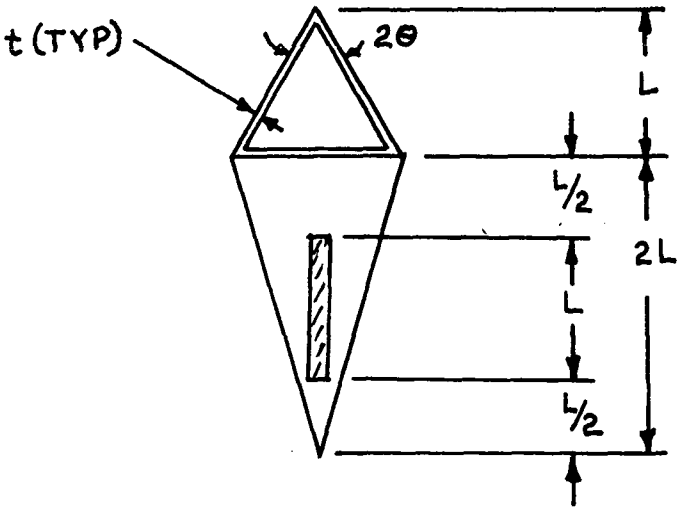

Weight

Dry weight = 14 lbs/ft
Wet weight = 75 lbs/ft
(bottom section fully saturated)

The most important feature of the "dynamic keel" barrier is its ability to conform to the sea surface and thereby channel the sorbents. Figure 2 shows the heave response for full scale wave heights up to 3 feet based on model tests and theoretical calculations. It can be seen in the figure that the heave phase angle is in good agreement with theory while the heave response operator is not. The disagreement in heave response is thought to be primarily due to the assumption of linearity in the theory. The model tests results indicate that the heave response of the barrier is much better (with respect to surface conformance) than predicted by theory.

For protected waters with two foot seas, wave periods lie mostly between 3 and 4 seconds or wave frequencies between 1.5 and 2 radians per second. Near this end of the scale the "dynamic keel" closely follows the sea surface as Figure 2 indicates enabling sorbent "herding" with little or no loss due to sorbents washing over the surface barrier.

The interface between the herding boom and the sorbent recovery conveyor is critical to the system performance as far as sorbent loss is concerned. OSI Drawing # 001572 shows this interface. The herding boom is permitted to pivot around Item 6. Item 4 is a Herculite fabric skirt which provides a flexible seal between the herding boom and the conveyor wall. Herculite fabric was chosen for the seal because of its high resistance to oils. The conveyor is fixed rigidly to the ship

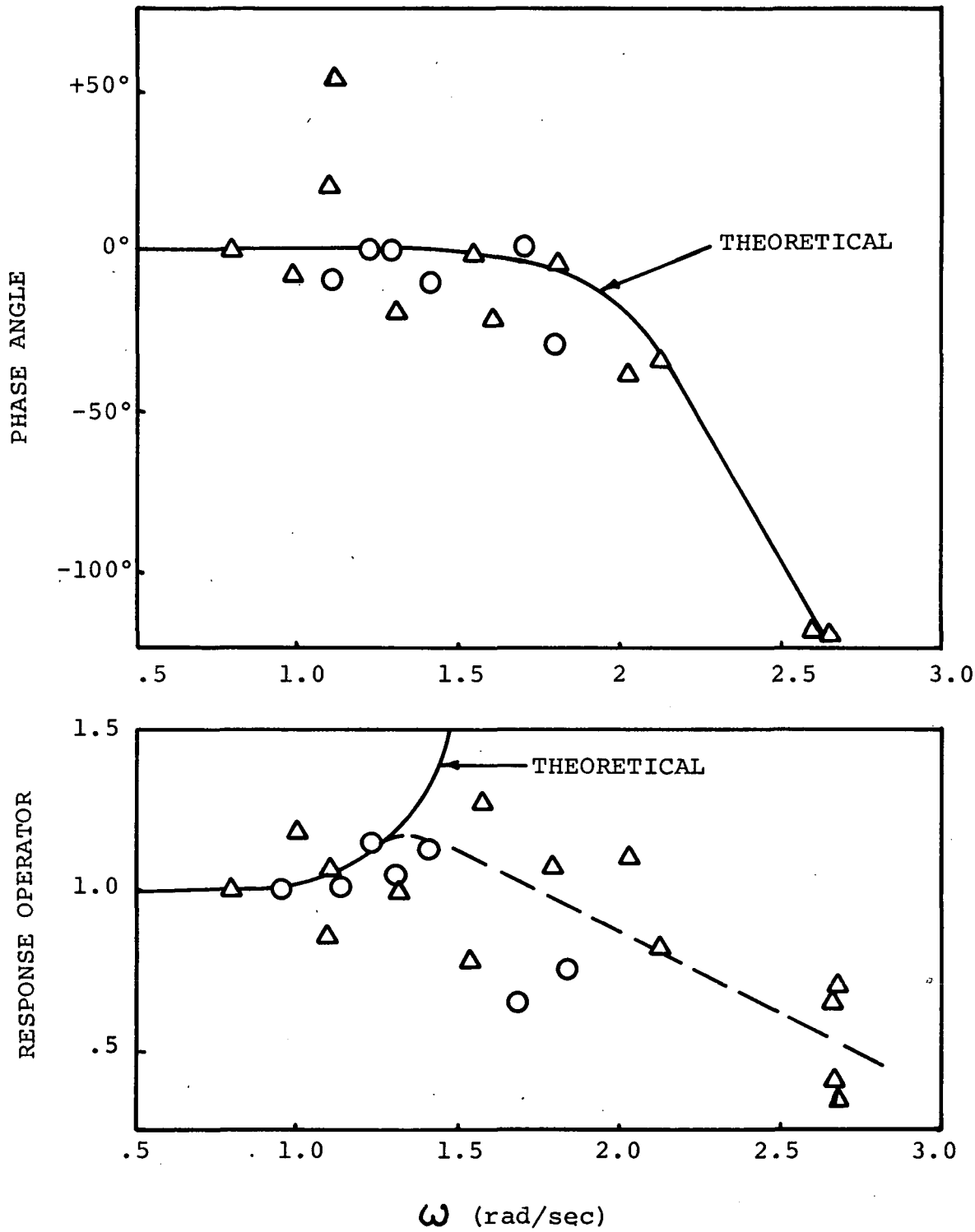

○ 1/4 Scale Model Test

△ 1/2 Scale Model Test

HEAVE RESPONSE OPERATOR & HEAVE PHASE ANGLE

vs.

WAVE FREQUENCY FOR PROTOTYPE

FIGURE 2

with the waterline lying in the middle of the conveyor wall. The conveyor wall is sized to permit a 4 foot high wave to pass by without sorbent loss. The interface allows free movement of the herding boom, yet contains the sorbent in the channel.

The shape of the herding boom is controlled by the boom support arms. The forward boom support arm supports the drag load on the herding boom and controls the mouth width. The aft boom support arm contols the width of the channel.

The forces on the forward boom arm may be calculated using a drag coefficient of 1.5 for the herding boom.

$$\text{Drag} = 1/2\ \rho\ C_D\ AV^2$$

Where ρ = Density of water (1.99 slugs/ft^3)

C_D = Boom's drag coefficient (1.5)

A = Area normal to the current velocity (24 feet^2)

V = Current speed (2 knots)

$$\text{Drag} = 1/2(1.99)(1.5)(12 \times 2)(2 \times 1.689)^2$$
$$= 410 \text{ lbs.}$$

The forces at the end of the forward support arm are as follows:

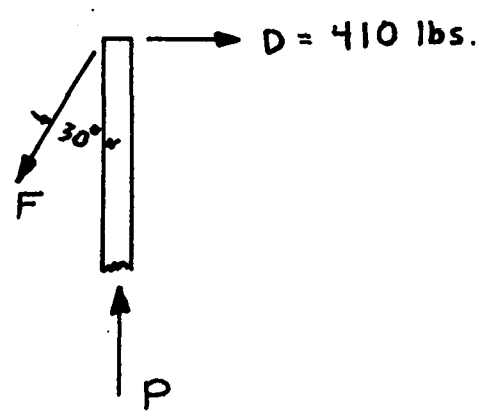

Balancing forces, force F and P are found,

$$F = 810 \text{ lbs.}$$
$$P = 700 \text{ lbs.}$$

Treating the boom as a pinned cantilever beam, the critical buckling load can be found using Euler's formula:

$$P_{cr} = \frac{\pi^2 EI}{\ell^2}$$

Where E = Modulus of elasticity (30×10^6 psi)
I = Moment of inertia (in^4)
ℓ = Length of column (21 feet)

For a 4" steel pipe, 1/4" wall $I = 6.47 \text{ in}^4$

$$P_{cr} = \frac{\pi^2 (30 \times 10^6)(6.47)}{(21 \times 12)^2}$$

$$P_{cr} = 30{,}166 \text{ lbs.}$$

$$\text{Safety factor} = \frac{30{,}166}{700} = 43$$

For a current speed of 4 knots the current drag on the boom is 4 times greater or 1640 lbs. This reduces the safety factor to approximately 10. This gives the capability of running the system at double the predicted maximum operating speed with a sufficient margin of safety.

The interface between the herding boom and the forward support arm is detailed in Drawing # 001570. The float forward of the herding boom provides buoyancy for the added weight of the support arm. The end of the forward support arm provides the means for joining the herding boom, boom support arm, boom support line, and the flotsam fence.

The aft support arm aids in controlling the shape of the mouth and channel of the herding boom. It is similar in design to the forward support arm but lighter. The loads the aft support arm sees will be minimal.

In determining the cross-sectional dimensions of the "herding boom", consideration was given to sorbent loss, oil loss, and cost.

When "herding" the oil with the boom, the oil wants to run under the barrier. This run under or drainage is a gravity phenomenon and the point where drainage will occur can be approximated by a dimensionless number. The dimensionless number that is used in connection with the drainage phenomenon is called the densiometric Froude number given below.

$$N_{FRD} = \frac{V}{\sqrt{Lg\,\frac{\rho_w - \rho_o}{\rho_w}}}$$

Where V = Free stream velocity
L = Depth of barrier below the slick
g = Gravity constant
ρ_w = Density of water
ρ_o = Density of oil

Previous work in this area and model testing done at Ocean Systems, Inc. established this critical Froude number to be 1.1. At values less than this number oil is contained and at values greater than this number oil is lost due to drainage under the barrier.

Given the critical Froude number is 1.1 and a current velocity of 2 knots, the value L may be computed.

$$L = \left(\frac{V}{N_{FRD}}\right)^2 \left(\frac{\rho_w}{\rho_w - \rho_o}\right) \left(\frac{1}{g}\right)$$

Where V = 2 knots (3.4 ft/sec)

N_{FRD} = 1.1

g = 32.2

$\frac{\rho_w - \rho_o}{\rho_w}$ = .135 (#4 Fuel Oil)

$$L = \left(\frac{3.4}{1.1}\right)^2 \left(\frac{1}{.135}\right) \left(\frac{1}{32.2}\right)$$

$$L = 2.2 \text{ feet}$$

The free stream velocity (V) is considered normal to the barrier. Considering the shape of the mouth of the system, (see Figure 3), the boom angle (θ) to the current (mouth angle) can range from 0° to 90°. During the hydrodynamic testing of the "herding" boom the optimum boom angle appeared to be 30°. This angle reduces the normal velocity to the "herding" boom to 1/2 the current velocity resulting in L equaling .55 feet. However, to allow for herding heavier oils whose density can reach as high as .95 (requires L to be 3 times larger than the example) a barrier depth of 2 feet was chosen.

At moderate current speeds oil is also lost under the barrier by the formation of droplets. This phenomenon is known as entrainment. Entrainment begins with a 2 foot deep barrier at velocities roughly equivalent to 2 knots. Further increases in depth produce little benefit.

Consideration was given to providing screens both top and bottom to further protect the system from sorbent loss. This idea was rejected for two reasons.

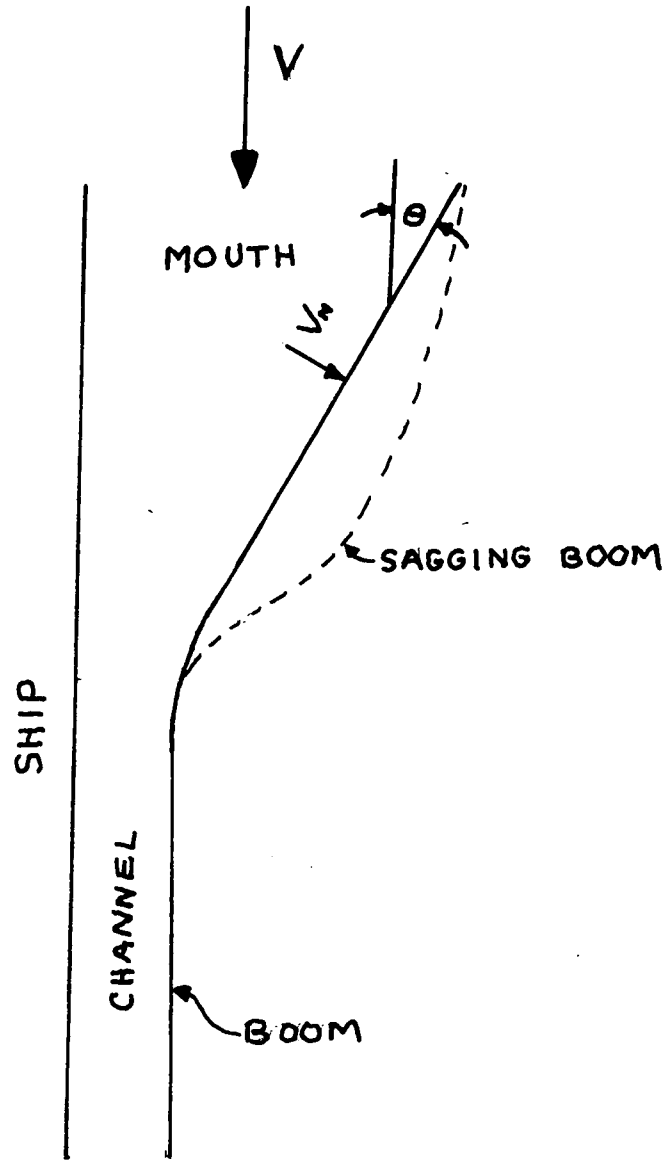

FIGURE 3

1. The screens would have a detrimental effect on the sea conformance characteristics of the "dynamic keel" boom.

2. The sorbent "herding" portion of the boom occurs near the channel with the majority of the sorbents never seeing the portion of the boom which is angled across the current. The major function of the "herding" portion of the boom is to "herd" the oil into the channel, not the sorbent. The channel portion of the boom "herds" both the sorbent and the oil with the normal current velocity equalling approximately 0. Further protection against sorbent loss using screens would be ineffective.

A summary of the characteristics of the herding boom are as follows:

Mouth width	=	16 feet (does not include channeling effect of the ship)
Mouth length	=	20 feet
Mouth angle	=	30° nominal
Channel width	=	4 feet
Channel length	=	20 feet
Herding boom length	=	20 feet
Herding boom weight	=	280 lbs (dry)
	=	1500 lbs (bottom section fully saturated)
Forward support arm weight	=	295 lbs
Aft support arm weight	=	110 lbs

SECTION 4.2

SORBENT RECOVERY SYSTEM

In the design of the sorbent recovery system, the objective was the transfer of sorbents from the channel to the oil extraction unit located on the deck of the ship. In the conceptual stage of the design a conveyor system was chosen which would combine both the trommel concept and the transfer of sorbents to the oil extraction unit.

Drawings # 001569 and 001573 detail the sorbent recovery system. It consists of two (2) conveyors; a sorbent recovery conveyor and a delivery conveyor. The sorbent recovery conveyor's function is to transfer the sorbent from the water surface to the delivery conveyor. The delivery conveyor's function is to transfer the sorbent to the oil extraction unit. A two conveyor system was chosen for its flexibility in positioning on board the recovery vessel.

The width of the sorbent recovery conveyor is determined by the channel width. A conveyor width smaller than the channel would tend to clog, or impede the flow of sorbents from the channel to the conveyor. The overall length of the conveyor is governed by the recovery ship's freeboard, the desired inclination of the conveyor, and the interface requirement with the oil extraction unit. The typical or average freeboard of the recovery vessel is 3 feet. The maximum inclination angle of the conveyor which will permit a smooth transfer of sorbents onto the ship is 40°. The interface requirement with the oil extraction unit required the delivery conveyor to be four feet off the deck of the recovery ship.

Drawing # 001569 shows the sorbent recovery system (which meets the above requirements) mounted on the recovery ship. The conveyors may be positioned in a variety of ways

to accommodate varying ships of opportunity. This versatility is accomplished by the pivot assembly which secures the conveyor to the ship. The pivot assembly (see Drawing # 001573 allows the conveyor to pivot up and down, side to side, and may be moved inboard or outboard on the structural frame connecting the pivot assembly to the ship. This versatility allows use of the system on ships with freeboards up to six feet and with varying shapes. It also allows the conveyor to be stored inboard while enroute to the spill area.

Drawing # 001569 shows a side view of the sorbent recovery conveyor mounted on the recovery ship. The view shows the conveyor extending two (2) feet below the water surface. This is required to allow the system to operate in 2 foot seas with no sorbent loss under the conveyor. At one point during the design a conveyor which floated on the water surface was considered. This proved unsatisfactory due to its large natural period. The floating end of the conveyor could not respond quickly enough to conform to the sea surface. Consequently, the conveyor was rigidly fastened to the recovery ship with allowance made for a maximum of 2 foot seas. For added flexibility, the ability to further extend the conveyor under the water surface was designed into the conveyor, By bolting Item 1 (see Drawing #001572, point A) to the conveyor at point B, the end of the conveyor will lie three feet below the water surface.

The sorbent recovery conveyor is sealed to the side of the ship by a flexible skirt (Item 11, Drawing # 001573). The conveyor is drawn tight against the side of the recovery ship by a hogging line attached to padeyes (Item 31) located on the end of the conveyor. Once the conveyor is positioned on the ship, the pivot assembly is secured in place such that

the recovery conveyor is only free to move up and down.

The delivery conveyor is positioned below the sorbent recovery conveyor and transfers the recovered sorbents to the oil extraction unit. The only requirements for the delivery conveyor are the ability to receive and deliver the sorbents to a bin whose top is located four feet off the deck without loss of sorbents.

The power requirements for the conveyor are small. The system is limited to a process rate of 20 bulk ft^3/min of sorbent. If the sorbents are totally saturated this will be a maximum of 10 ft^3/min of oil recovered or 74.8 gal/min. The maximum expected height required to raise the oil by the sorbent recovery conveyor is 15 feet. The theoretical power required may be calculated as follows assuming 100% efficiency.

$$\begin{aligned} \text{Power} &= \text{Recovery Rate} \times \text{Height of Oil Raised} \\ \text{Power} &= 10\ ft^3/min \times 60\ lbs/ft^3 \times 15\ ft \\ &= 9000\ ft\ lbs/min \\ &= .27\ HP \end{aligned}$$

Assuming at worst an efficiency of 25% the power required equals 1 HP. However, to allow for an increase in the process rate and increased loads due to the system fouling, a 2 HP unit was chosen to drive the sorbent recovery conveyor. This unit is a three-phase variable speed motor which will allow the operator to control the speed of the conveyor. In addition a remote electrical control is provided for remote control of the conveyor at a centrally located control station. The conveyor speeds can vary from 20 ft/min to 200 ft/min. An increase or decrease in these limits, if desired, may be accomplished using gears. The maximum required

speed for the sorbent recovery conveyor is estimated to be 100 ft/min with a current velocity of 2 knots.

The variable speed drive for the sorbent recovery conveyor is an important feature of the system. The overall flow rate of the system is controlled by the belt speed of the recovery conveyor. The velocity of the belt controls the sorbent flow which in turn controls the contact time which governs the percentage of oil absorbed. Consequently, the efficiency of the total system is directly dependent upon the speed of the recovery conveyor.

The delivery conveyor is driven by a constant speed, three-phase, 1 HP motor. The speed of the belt is fixed at 93 ft/min. The speed of the delivery belt need not be variable. The delivery conveyor's only function is to transfer the sorbent from the recovery conveyor to the oil extraction unit, the flow rate being fixed by the recovery conveyor. At the maximum sorbent flow rate of 20 bulk ft^3/min, the belt will be loaded with 1 layer of sorbent cubes.

A summary of the characteristics of the sorbent recovery system are as follows:

Sorbent Recovery Conveyor

Length	=	23 feet
Width	=	4 feet
Weight	=	950 lbs (1280 lbs including support frame)
Power	=	2 HP
Belt Speed	=	20 ft/min to 200 ft/min
Lift Height	=	15 ft maximum

Delivery Conveyor

Length	=	13 feet
Width	=	3 feet
Weight	=	580 lbs (920 lbs including support frame)
Power	=	1 HP
Belt Speed	=	93 ft/min

SECTION 4.3

VESSEL PRELIMINARY DESIGN DESCRIPTION AND RATIONALE

Ship Characteristics

The ship characteristics developed were based on the following oil recovery system technical and operational considerations:

System Considerations

The physical size of the system.
The weight of the system.
The volume of sorbent that is required.
The deck space required for the system.

The principal components of the oil recovery system are the herding boom, the conveyor, the oil extraction device and the sorbent transfer and broadcasting equipment. Other additional components are the sorbent containers, the recovered oil reservoir, the pump and the portable power unit. It is assumed that a portable electric power supply will be required.

Vessel Operational Requirements and Considerations

The vessel operational requirements (for protected waters) of the RFP are as follows:

Vessel Speed	12 knots
Maximum Draft	3 feet
Waves	2 feet
Current	6 knots
Wind	20 mph
Temperature	20°C
Recovery (minimum/desirable)	1500/3000 gal/hr

Other requirements are:

It must have an 8 hour supply of fuel.

It must have adequate deck space and stability.

It must be able to tow (alongside) the oil storage craft during operations.

It must have sufficient maneuverability to operate in restricted areas.

It must be capable of operating the system without assistance from other craft.

It should have relatively low freeboard, i.e., not over four feet.

General Deployment Vessel Principal Characteristics

The following deployment vessel characteristics are given below based on the technical and operational requirements of the oil recovery system using sorbents. These characteristics are not based with a specific vessel in mind, but rather on general requirements. Later, certain vessels are identified which are compatible with these requirements. Some of the characteristics are given in minimum and maximum terms.

Length	80-200 feet
Width	20-40 feet
Draft	2-6 feet
Displacement	50-400 tons
Type of Propulsion	Preferably diesel with low speed capability
Screws	Preferably twin screws with low speed capability such as afforded by controllable pitch screws. Single screw ships with a large rudder are satisfactory.

Horsepower	200-2000
Speed	12 knots
Endurance	8 hours
Maneuverability	Must be good in restricted waters.
Deck Space	1000 feet^2 minimum
Stability	Must be capable of taking the weight of system excluding oil.
Personnel Accommodations	Should have capability to accommodate crew and working party for a total of 8 men.
Freeboard	2-4 feet

NOTE: It should be noted that a range of 2 to 6 feet is given for the draft. The 3 foot maximum draft in the RFP is very difficult to attain. Some vessels can come close to this draft with a reduced fuel load.

Recommended Deployment Vessels and Craft

The vessels and craft listed can meet most of the vessel requirements except for the draft.

USCG 100' or larger buoy boats

USCG 100' or larger inland buoy tenders

USCG 115' river buoy tenders

USCG 75' or larger inland construction tenders

Commercial construction tenders 80' or more

Fishing boats 80' or more

Small commercial tugs 100' or more

Powered oil barges 80' or more

Army or Seabee construction or special purpose craft 80' or more

Offshore oil supply boats, 125' to 200'

It should be recognized that a large uninterrupted deck area is ideal for the oil recovery system. The ship best meeting this requirement is the offshore oil vessel. These are plentiful on the Gulf coast and some around Santa Barbara, California.

Normally most ships have a passage on each side of the deck house that is 2 to 3 feet wide. This is necessary so that the screw conveyor which also acts as the broadcaster can have a clear run. Where this is not possible, deck houses can be cut to accommodate the system. If the ship has solid bulwarks, these can also be cut out. After the operation, the areas cut out can be welded up.

Operational Scenario

The normal operational mode for operations would be with the system deployed to the starboard side and the oil barge tied to the vessel on the port side. It is not feasible for the oil to be stored aboard the vessel except when the vessel is an oil barge. The gain in topside weight which affects stability precludes this. In addition, the unloading of the oil would interfere with oil recovery operations. An alongside barge has the advantages of providing steering symmetry and it can be replaced by another barge when it is full without disrupting operations. Normally the oil recovery system should be installed and removed with the vessel anchored so that both sides are accessible.

The vessel will normally travel at 2 knots during recovery operations. It is recognized that accurate steering is difficult at such low speeds. This can be improved by the

use of engines if the vessel is twin screwed or by using a drogue if it is single screwed.

During normal oil recovery operations, the vessel will operate with or against the current because oil slicks tend to form their long axis parallel to the current. It is not always possible to operate in this manner because of lack of sea space. In addition, currents in excess of 2 knots will cause the ship to move astern relative to land. In such a situation it will often be necessary to operate at an angle to the prevailing current. This in general should not present problems although currents other than those parallel to the longitudinal axis of the vessel may change the configuration of the boom and cause eddies.

The effect of wind on the direction of the vessel is significant at low speeds. This can be compensated for by the rudder and/or engines to keep the vessel parallel to the current where feasible. This is more difficult when heading into the wind and particularly with a high bow. It can be expected that wind and current will not be in the same direction in inland waters.

Normal maneuvers and turns should be done gradually to maintain steady state oil recovery operations. However, sharp turns or backing down should not affect or damage the oil recovery system providing the speed does not exceed 4 knots.

Each vessel will have a different effect on the oil recovery system. A vessel with fine lines will steer better but will probably roll more. Obviously a larger vessel is more desirable from an operational viewpoint, but will have an undesirable larger draft. The single characteristic that has the greatest effect on the system will be the number of screws. A single screw ship will be more difficult to control under adverse conditions than a twin screw type. It may be

necessary to use a small boat on the bow of the single screw ship to enable it to steer effectively.

An important characteristic that affects the oil recovery system is slow speed control. Controllable pitch, screws, or a diesel-electric system are best. If speed is excessive, drogues or holdback craft may be required.

The effect of 2 foot seas on the vessel will be minimal. The roll angle should never exceed 5 degrees. An 80 foot vessel is not greatly affected by two foot seas. In addition, the damping action of the barge alongside as well as the conveyor and herding boom will reduce the roll. The pitching angle will be insignificant.

The weight of the oil recovery system will be approximately 10,000 lbs. Such a deck weight should not degrade the stability of the vessel to any significant degree. However, it should be recognized that such weights will require weight handling as well as industrial facilities for the installation of the system on ships of opportunity.

SECTION 4.4

OIL STORAGE AND DISPOSAL SYSTEM PRELIMINARY DESIGN DESCRIPTION AND RATIONALE

Introduction

To effect support of the oil recovery system, it is necessary to move and store 200,000 gallons of recovered oil. In nearly all cases, the storage capacity of the vessel that is deploying the oil recovery system is limited. The only exception would be if a small powered tanker barge were used. In all other cases the periodic removal of recovered oil is mandatory. It is further assumed that in nearly all cases the use of the vessel fuel tanks are not available for storage of recovered oil. The limited fuel tank capacity as well as the contamination of fuel tanks would preclude such a course of action. In addition, the increase in draft of the vessel and the necessity for unloading would cause operational interruption.

The providing and disposal of the agglomerates used in oil recovery has also been considered.

Oil Storage During Recovery Operations

Topside oil storage on the vessel is not feasible for the following reasons:

As oil is recovered the vessel will increase in draft and the center of gravity of the ship will rise. The latter effect will in general govern the oil storage capacity. The weight of the oil will be added at a point significantly above the center of gravity of the ship. This will raise the center of gravity of the deploying vessel and reduce its stability. The limiting capacity is different for each ship and must be evaluated accordingly. A noticeable reduction in the "stiffness" of the vessel as tested by a person walking from one side to the other is a rough measure of reduced stability. The vessel must then be unloaded. Such a procedure

is not efficient or feasible. Therefore, oil storage during operations is best achieved by the use of an oil barge moored alongside the deployment vessel. The recovered oil will be pumped from the temporary storage tank aboard the deploying vessel to the oil storage barge. When the oil storage barge is full or when the draft becomes excessive, the barge will be replaced by another one or it will be unloaded to ashore or afloat oil storage facilities.

Shore and Afloat Storage for 200,000 Gallons of Recovered Oil

Afloat storage is considered to be the most important in oil recovery operations. The reason for this is that areas subject to spills are normally within range for afloat storage facilities. Fuel oil facilities normally consist of fuel oil barges and small powered tankers as part of the fuel oil distribution system. Such craft transport the oil from the large tanker terminals to the points of use. This method is used where possible since it is the most economical mode of transportation. The oil is then transferred to fuel oil tank storage facilities on shore for further distribution, usually by tank truck.

It is important to recognize that such facilities do not have significant shore storage facilities for polluted oil. In general such facilities are available only at refineries and related oil processing plants. Therefore, polluted oil could not be offloaded at fuel company facilities. Thus the most feasible method of storing polluted oil would be on oil barges or small powered oil barges such as are normally found in most cities that have water transportation available. The recovered oil could then be offloaded at the large tanker terminals for transport to oil processing facilities.

It would take a barge of approximately 665 ton capacity to accept 200,000 gallons of oil. This is feasible since most local oil barges or small powered tankers have a

capacity of 500 to 2000 tons. The great advantage of oil barges or tankers is that they can be brought to the scene of operations. In many cases a single barge moored alongside the oil recovery vessel would provide the requisite oil storage capacity. However, in shallow waters, the draft limitation would require an additional barge before the capacity of the first barge is reached.

Small powered tankers are normally available in coastal areas from companies that are in the oil transport business.

Where barges or water transport are not available, tanker truck transportation to a suitable offloading facility would be required. This would be a slow and disruptive step in oil recovery operations since this would mean that oil storage during recovery could only be provided aboard in small portable tanks or with craft of opportunity.

In view of the above, the use of afloat oil storage facilities is recommended where possible. Such facilities usually have adequate capacity and can be provided at the site of operations.

Sorbent Storage, Transporation and Disposition

The storage, transportation and disposition of the sorbent cubes will be based on the following operational requirements:

Total Volume of Cubes	200 $feet^3$
Working Volume of Cubes	120 $feet^3$
Volume of Feed Hopper	80 $feet^3$
Makeup Volume	80 $feet^3$

Container Selection

Due to the relatively large volume of sorbent, the containers must be light, be capable of being stacked, occupy a minimum of space when empty, be oil resistant and rugged. In addition, the cost must not be excessive.

A number of containers were considered. The most promising two appeared to be the 20 gallon polyethylene garbage can and heavy polyethylene bags.

A comparison of the two containers indicated that the polyethylene bag was superior for the following reasons:

It is less expensive

It can be transported easily

It can be stored very efficiently even in cramped and irregular areas.

When empty they occupy very little space.

After an operation, the sorbent cubes can be bagged directly from the feed hopper.

The sorbent cubes can be stored in the bags or the bags can be placed in a confined container for permanent storage.

Bag Specifications

The bag specifications are as follows:

Material -	Polyethylene, 6 mils thick
Size -	20 to 30 gallons
Number Required - Including Spares	100

Volume Requirements

The approximate space requirements for the 200 feet^3 of all the sorbent is a space 4' x 5' x 10'. For the makeup volume of 80 feet^3, a space of 4' x 5' x 4' will be required. These are relatively small volumes and are particularly advantageous when the limited space aboard the vessel is considered.

Sorbent Disposal After Use

There are two courses of action open concerning the disposition of the sorbents after use. They can be disposed of by burying or burning them, or saving them for the next operation. It is believed that the latter course of action is feasible and especially if they can be used several times a year. It is recommended that the sorbents be stowed after use either in the polyethylene bags or placing the polyethylene bags in a confined container. These can be stored in the weather.

SECTION 4.5

OIL TRANSFER SYSTEM PRELIMINARY DESIGN AND RATIONALE

Previously it has been established that the most feasible method of the storage of oil that is being recovered is by means of a barge that is being towed alongside the recovery vessel. This will require an oil transfer system. This system will take suction from the oil recovery sump, through an oil pump and discharge it into the oil barge.

A number of oil transfer systems were examined. The system best suited is as follows:

Pump - Blackmer Multi-Vane GXS2-1/2 Pump driven by a 5 HP electric motor

This pump is capable of transferring 3400 gallons per hour. It has advantages of high efficiencies at various viscosities of oil, it is designed to handle petroleum products, can handle oils with a wide range of viscosities, can pass debris without damage and is self adjusting.

Hose - Heliflex Blue 2-1/2" Hose for suction (25') and discharge (200').

It is lightweight, flexible and is designed to carry oils, chemicals and acids. Fittings compatible with this hose are available.

The pump selected is a positive displacement vane pump. This type can pump approximately 3400 gallons per hour with an oil viscosity range of 100 to 25,000 SSU. In our range of differential pressure, there is little effect of viscosity on pumping volume. For comparison at 20°C, 100 SSU is the mid-range of No 4 fuel oil and 20,000 SSU is the mid-range of No. 6 fuel oil.

SECTION 4.6

FLOTSAM FENCE PRELIMINARY DESIGN DESCRIPTION

In the course of oil recovery operations, it can be expected to encounter flotsam and debris. This would be inimical to the operation of the oil recovery system. The amount and type of flotsam could vary widely. Large floating debris such as logs and trees can usually be seen and avoided. The danger from these is minimal since they cannot be picked up by the oil recovery system. The greatest danger is from smaller objects such as bottles, cans and small pieces of wood. These can be picked up by the conveyor and introduced into the system.

When operating in areas where flotsam is encountered, a flotsam fence should be used. The fence will be deployed as shown in Drawing # 001569. One end will be attached to the float and the other to the ship. When flotsam is captured, it must be removed. This can be accomplished either by removing the objects physically from a small boat or detaching the fence from the vessel and dumping it by swinging it outboard. This latter operation would also be done with a small boat.

The flotsam fence would normally assume a parabolic configuration and the flotsam would tend to be collected in the apex. For this reason, the flotsam fence normally would not shed the flotsam outboard of the boom.

The flotsam fence is made of 3/4" Flat Flex wire belt mesh which is made of .092" stainless wire. The total width is 24 inches of which 8 inches is above the water and 16 inches below. Floats are attached at the surface and 1 lb. ballast weights are at the bottom. A sketch of the fence is shown on the following page.

It should be recognized that the flotsam fence when filled with debris will act as an oil barrier and will significantly affect oil sorbtion. This is particularly true when the Froude number exceeds 1.1. At this point all the collected oil will be dumped under the fence at once.

SKETCH OF FLOTSAM FENCE

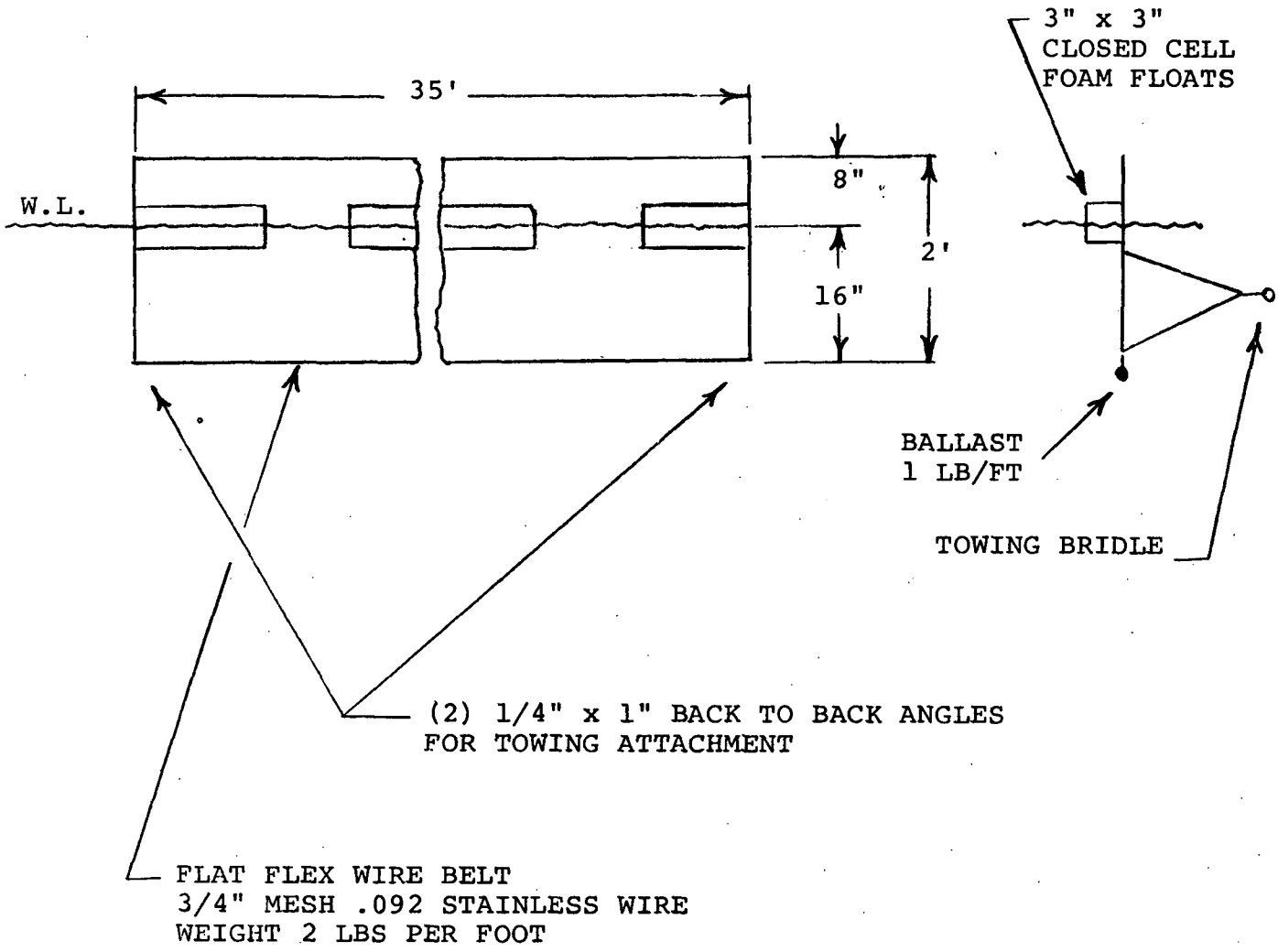

PRINCIPAL CHARACTERISTICS

LENGTH——————35 FEET

DEPTH——————16" IN WATER 8" ABOVE WATER

WEIGHT——————3 LBS PER FOOT INCLUDING BALLAST

VOLUME——————APPROX 5 FT^3 INCLUDING FLOATS

TOTAL WEIGHT————APPROX 125 LBS

DRAG AT 2 KNOTS——130 LBS

FIGURE 4

A P P E N D I X

B

OCEAN SYSTEMS, INC.
AFFILIATE OF UNION CARBIDE CORPORATION AND THE SINGER COMPANY
11440 ISAAC NEWTON INDUSTRIAL SQUARE NORTH, RESTON, VIRGINIA 22070
TELEPHONE (703) 471-1310
TELEX 899442

May 17, 1972

Meloy Laboratories, Inc.
6631 Iron Place
Springfield, Virginia 22150

Attention: Mr. R. Pasquale, Contracting Officer

Subject: Budgetary Estimate to Construct a Prototype Oil Recovery System Using Sorbents

Reference:
(1) OSI letter dated May 3, 1971
(2) Telephone Conversation between R. Pasquale and D. Bellovich on May 11, 1972

Gentlemen:

Ocean Systems, Inc., herein submits the following budgetary figures for the major cost categories in support of our $60,000 budgetary estimate provided in the reference (1) letter.

1.	Direct Labor Costs including Overhead		$42,500
2.	Material		16,500
	a. Flotsam Fence	$ 700	
	b. Transfer Pump & Hoses	3,500	
	c. Herding Boom	7,200	
	d. Recovery & Delivery Conveyor	5,100	
3.	Other Costs		1,000
	Total Budgetary Estimate		$60,000

This estimate includes costs for doing detailed design work necessary for preparing working drawings required for fabrication, fabricating the flotsam fence, forward herding boom, and recovery and delivery conveyors, providing the transfer pump and hoses, and supplying the boom support arm interface. This does not include providing a power supply, oil extractor, or system interface components.

It is hoped that this additional breakdown is sufficient to assist you in preparing your final report for EPA.

Very truly yours,

OCEAN SYSTEMS, INC.

Dale E. Bellovich

Dale E. Bellovich
Contract Administrator

DEB:ds

1 Accession Number	2 Subject Field & Group	SELECTED WATER RESOURCES ABSTRACTS INPUT TRANSACTION FORM
W		

5 Organization

Meloy Laboratories, Inc.
6715 Electronic Drive
Springfield, Virginia 22151

6 Title

Oil Recovery System Using Sorbent Material

10 Author(s)

Garth D. Gumtz
Thomas P. Meloy

16 Project Designation

EPA, Contract No. 68-01-0068

21 Note

22 Citation

Environmental Protection Agency report number, EPA-670/2-73-068, September 1973.

23 Descriptors (Starred First)

*Oil slick Recovery, *Sorbent Oil Recovery, *Shipboard Oil Recovery; sorbent broadcasting, sorbent herding, sorbent pickup, sorbent recycle, vessel requirements.

25 Identifiers (Starred First)

*Oil Recovery by Sorbents

27 Abstract

The feasibility of recovering oil in slicks 1mm & thicker by the use of recycled sorbents has been shown in Laboratory & wave tank tests. Sorbents made of recticulated foam are broadcast on the sea, herded by a boom, picked up by a porous belt and the oil squeezed out of the sorbents by a wringer. The sorbents are then rebroadcast on the sea for further oil recovery.

General equations were developed for basic sorption properties, sorbent broadcasting, sorbent herding, sorbent pickup, recovery of oil from the sorbent & for the total system. Based on the laboratory modeling & general equations, the total system concept was developed. It was concluded that one inch cube sorbent particles distributed in a shrouded rectilinear screw fed system was optimal. A 4/1 compression ratio of the slick by a boom herding the sorbent & oil to the channel would work under virtually any wave condition.

Capital costs for this system are $216,500 & operating costs $59,500 per year. Economic studies made indicating that recovery costs is about 6¢ per gallon, assuming a system is used 22 days per year & a 20 year depreciation. For large spills the salvage cost of the oil could pay for the operation. The system has a nominal capacity of 5,000 gallons per hour.

Abstractor Thomas P. Meloy

Institution Meloy Laboratories, Inc.