DRAFT GUIDELINES

FOR

PERMIT APPLICATIONS AND DEMONSTRATION TEST PLANS

FOR

PCB INCINERATORS

MAY 28, 1986

U.S. Environmental Protection Agency
Office of Toxic Substances
Chemical Regulation Branch
TS-798
Washington, D.C. 20460

TABLE OF CONTENTS

		Page
Preface		ii
List of Figures		v
List of Tables		vi
Abbreviations		vii
Glossary		x
1.0	Introduction	1
2.0	Summary of 40 CFR 761 Regulations and Guidance	2
	2.1 General	2
	2.2 Approval Authority	2
	2.3 §761.70 Incinerators	2
3.0	Office of Toxic Substances (OTS) Permitting Procedures	9
	3.1 Establish Communications with the EPA Permit Writer	9
	3.2 Apply for an R&D Permit (Optional)	9
	3.3 Submit Operating Permit Application and Demonstration Test Plan to DD/EED	13
	3.4 EPA/OTS Review of Permit Application and Demonstration Test Plan	14
	3.5 EPA/OTS Issues Demonstration Test Permit	14
	3.6 Conduct Demonstration Test	14
	3.7 Submit Demonstration Test Report to DD/EED	15
	3.8 EPA/OTS Review of the Demonstration Test Report	15
	3.9 DD/EED Issues an Operating Permit	15
4.0	Permit Application Format	16
	4.1 Permit Application Cover	16
	4.2 Section I - Summary	16
	4.3 Section II - Project Organization	16
	4.4 Section III - Waste Description	19
	4.5 Section IV - Process Engineering Description	19
	4.6 Section V - Monitoring Plan	22
	4.7 Section VI - Monitoring Procedures	25
	4.8 Section VII - Data Reporting/Recordkeeping	25
	4.9 Section VIII - Inspection Procedures	26
	4.10 Section IX - Spill Prevention Control and Countermeasures Plan	27
	4.11 Section X - Safety Plan	27
	4.12 Section XI - Training Plan	27
	4.13 Section XII - Plans for a Demonstration (Trial Burn)	27
	4.14 Section XIII - Test Data or Engineering Performance Calculations	28

TABLE OF CONTENTS (continued)

		Page
	4.15 Section XIV - Other Permits/Approvals	28
	4.16 Section XV - Schedule of Pre-Operation Events	28
	4.17 Section XVI - Quality Assurance Plan	28
	4.18 Section XVII - Standard Operating Procedures	29
	4.19 Section XVIII - Closure Plan	30
5.0	Demonstration Test Plans	31
	5.1 General	31
	5.2 Contents of a Demonstration Test Plan	31
6.0	Conducting and Monitoring a Demonstration Test	44
	6.1 Start-up	44
	6.2 PCB Waste Destruction	45
	6.3 Shutdown	45
7.0	Demonstration Test Report	46
	7.1 Format and Contents	46
	7.2 Review	52
	7.3 Approval	52
8.0	References	53
Appendix A - Checklists for Completeness of Submittal		A-1
Appendix B - Monitoring, Sampling, and Analysis Procedures		B-1
Appendix C - OTS Guidance on Frequently Asked Questions		C-1
Appendix D - Addresses for Headquarters and Regional Offices		D-1
Appendix E - Annotated Bibliography		E-1

List of Figures

Figure	Title	Page
1	Major steps in the OTS operating permit process	10
2	Process to obtain an operating permit from OTS.	11
3	Research permitting process	12
4	Example permit application cover	18
5	Schematic of sampling and monitoring points for an incinerator.	23
6	Cover for the Demonstration Test Plan.	33
7	Demonstration Test Report cover.	48

List of Tables

Table	Title	Page
1	Outline of Major Sections of 40 CFR 761.	3
2	Disposal Options by PCB Waste Categories	4
3	Summary of Permit Approval Authority	5
4	Format for Permit Applications for PCB Incinerators.	17
5	Example Summary of Monitoring Plan for a Mobile Incinerator.	24
6	Format of Demonstration Test Plan for Incinerators	32
7	Example Summary of Anticipated Test Parameters for an Incinerator.	36
8	PCDD and PCDF Reporting Format	38
9	Example: Proposed Schedule for Trial Burn	42
10	Format for the Demonstration Test Report	47
12	Example Demonstration Test Results Summary	49

ABBREVIATIONS

AA: Assistant Administrator for Pesticides and Toxic Substances.

acm: Actual cubic meters.

acfm: Actual cubic feet per minute.

BTU: British thermal unit.

°C: Degrees Celsius.

CE: Combustion efficiency.

CFR: Code of Federal Regulations.

CO: Carbon monoxide.

CO_2: Carbon dioxide.

CWA: Clean Water Act. See 40 CFR 129.

CEMS: Continuous emissions monitoring system.

DD/EED: Division Director, Exposure Evaluation Division.

DRE: Destruction and removal efficiency.

dscf: Dry standard cubic feet.

dscm: Dry standard cubic meters.

DVE: Data variance estimate.

ECD: Electron capture detector.

EIMS: Electron impact mass spectrometry (low resolution).

EPA: U.S. Environmental Protection Agency.

ESP: Electrostatic precipitator.

°F: Degrees Fahrenheit.

FR_s: Flow rate of gas in the stack. Also termed Q_s or ER_s by some authors.

g: Grams.

gal.: Gallons.

GC: Gas chromatography.

GC/ECD: Gas chromatography with electron capture detection.

GC/MS: Gas chromatography/mass spectrometry.

GPC: Gel permeation chromatography.

gpm: Gallons per minute.

gr: Grains

h: Hours.

HCl: Hydrochloric acid.

HECD: Hall electron capture detector.

H_2O: Water.

HRGC: High resolution GC, also termed capillary GC.

in.: Inch(es).

kg: Kilograms.

lb: Pounds.

mg: Milligrams.

min: Minutes.

MS: Mass spectrometry.

NEPA: National Environmental Policy Act.

NO_x: Oxides of nitrogen.

NPDES: National Pollutant Discharge Elimination System.

O_2: Oxygen.

OPTS: Office of Pesticides and Toxic Substances.

OSHA: Occupational Safety and Health Act. See 29 CFR 1910.1.

OTS: Office of Toxic Substances, a suborganization of OPTS.

PCB: Polychlorinated biphenyl(s).

PCDD: Polychlorinated dibenzo-p-dioxin.

PCDF: Polychlorinated dibenzofuran.

PGC: Packed column gas chromatography.

pH: Measure of acidity or alkalinity.

ppm: Parts per million.

psi: Pounds per square inch.

QA: Quality assurance.

QC: Quality control.

RA: Regional Administrator.

RCl: Total chlorinated organics.

RCRA: Resource Conservation and Recovery Act. See 40 CFR 122-124 and 260-265.

sec: Seconds.

TCDD: Tetrachlorodibenzo-p-dioxin.

TCDF: Tetrachlorodibenzofuran.

TSCA: Toxic Substances Control Act, PL 94-469 (1976). See 40 CFR Part 761.

GLOSSARY

Air: Includes ambient air and stack gases unless otherwise specified.

Analyte: Chemical compound or element which is the subject of an analysis.

Aroclor: Commercial mixture of PCBs previously manufactured by Monsanto.

Authorized use: Any PCB use or servicing which can be conducted in accordance with 40 CFR 761.30.

Combustion efficiency (CE): $CE = 100[CO_2] \div [CO_2+CO]$.

Continuous emissions monitoring system (CEMS): An emissions measurement system which is in continuous operation except for system breakdowns, repairs, calibration checks, and zero and span adjustments. See 40 CFR Parts 60.2 and 60.13 and Part 60, Appendix B for additional details.

Data variance estimate (DVE): Either a numerical value such as a standard deviation, or a qualitative evaluation such as "good."

Destruction and removal efficiency (DRE): A measure of an incinerator's performance in removing or destroying PCBs (or another compound). DRE is expressed as percent efficiency:

$$\frac{W_{in} - W_{out}}{W_{in}} \times 100$$

where: W_{in} = Mass feed rate of PCB in the waste stream feeding the incinerator, and

W_{out} = Mass emission rate of PCB present in exhaust emissions prior to release to the atmosphere.

Demonstration Test: A test to demonstrate system performance, commonly called a trial burn.

Electron impact mass spectrometry (EIMS): Low resolution mass spectrometry operated in the electron impact ionization mode.

High resolution gas chromatography (HRGC): Gas-liquid chromatography performed using a capillary column, typically 10-50 m long x 0.2 mm ID, coated on the interior with a liquid phase.

Isomer: Any compound which has the same molecular formula, but different positional substitutions. For example, for PCBs, 2,2'-dichlorobiphenyl and 2,3-dichlorobiphenyl are isomeric; 4-chlorobiphenyl and 2,3,4-trichlorobiphenyl are not.

Liquid: A substance is a liquid if its melting point is less than 20°C and does not pass the structural integrity test (> 15% free liquid content) (Weller 1982).

Method: A series of techniques or procedures which form a specific, well-defined destruction, sampling, chemical analysis, or other procedure for a specified compound(s)/matrix(ces) combination.

Polychlorinated biphenyl (PCB): One of 209 individual compounds having the molecular formula $C_{12}H_nCl_{10-n}$, where n = 0-9. This definition includes monochlorobiphenyls.

Polychlorinated dibenzo-p-dioxin (PCDD): One of 75 individual compounds having the molecular formula $C_{12}H_nCl_{8-n}O_2$, where n = 0-7. This definition includes monochlorodibenzo-p-dioxins.

Polychlorinated dibenzofuran (PCDF): One of 135 individual compounds having the molecular formula $C_{12}H_nCl_{8-n}O$, where n = 0-7. This definition includes monochlorodibenzofurans.

Packed column gas chromatography (PGC): gas-liquid chromatography performed using a column, typically 180 cm long x 2 mm ID, packed with a liquid phase on a granular solid support material.

Part per million (ppm): One part in 10^6. For gaseous mixtures, a volume/volume (v/v) basis is typically used and:

$$ppm = mg/m^3 \times \frac{RT}{MW}$$

where RT = 22.4 liter/g-mole at 0°C and 1 atm
= 24.5 liter/g-mole at 25°C and 1 atm
and MW = molecular weight of compound, i.e., g/g-mole

For low concentration aqueous samples, a weight:volume (w/v) basis is most commonly used and 1 ppm = 1 mg/liter (1 mg/kg for liquids with density 1). For nonaqueous liquids and solid materials, a weight:weight (w/w) basis is most commonly used and 1 ppm = 1 mg/kg.

Quality assurance (QA): The total integrated program for assuring the reliability of monitoring and measurement data. A system for integrating the quality planning, quality assessment, and quality improvement efforts to meet user requirements.

Quality control (QC): The routine application of procedures for obtaining prescribed standards of performance in the monitoring and measurement process.

QC blank: A sample processed and analyzed to obtain background concentrations of the analytes.

QC control: A sample containing a known amount of analyte which is processed with sample batches to monitor recoveries.

Residence time: The time that the flue gas spends in the destruction zone (area of combustion chamber with the temperature equal or above that required by the regulations); calculated by dividing the zone volume by the volumetric flow rate at the exit (actual pressure and temperature conditions).

Semivolatile organics: Organic compounds which are analyzed by an extraction/gas chromatographic procedure. This excludes volatile compounds such as chloroform which would be lost in an evaporation concentration step and non-volatiles such as humic acids which will not elute from a gas chromatograph.

Solid: A substance is a solid if its melting point is greater than 20°C and it passes the structural integrity test (Weller 1982).

Tetrachlorodibenzo-p-dioxin (TCDD): One of 22 isomers with molecular formula $C_{12}H_4Cl_4O_2$. Often colloquially used to refer specifically to 2,3,7,8-TCDD.

Tetrachlorodibenzofuran (TCDF): One of 38 isomers with the molecular formula $C_{12}H_4Cl_4O$.

Technique: Specific destruction, laboratory, or sampling operation usually conducted as part of a method. GC/EIMS and Soxhlet extraction are techniques.

Trial burn: A demonstration of a thermal destruction system's performance ("Demonstration Test").

1.0 INTRODUCTION

The Code of Federal Regulations, Title 40, Part 761 (40 CFR 761) establishes rules on the disposal of PCBs and PCB items. Under these rules, organizations or persons wishing to dispose of PCBs are required to use approved methods and must obtain a permit.

This document provides guidance for persons applying to the Office of Toxic Substances of the U.S. EPA for approval of PCB disposal by incineration (§761.70). This document presents and discusses the format, content, and level of detail required for permit applications, demonstration test plans, and demonstration test reports.

Note that these guidelines address only permit requirements for the disposal of PCBs as regulated under TSCA. Other laws such as RCRA, CWA, and OSHA regulations may apply to PCB disposal methods and may have different or additional permit requirements.

Section 2.0 provides a brief summary of pertinent EPA procedural requirements and guidance as well as a summary of pertinent Part 761 regulations. Section 3.0 describes the EPA Office of Toxic Substances (OTS) permitting procedures. Sections 4.0 and 5.0 provide guidance regarding preparation and submission of permit applications and demonstration test plans, respectively. Section 6.0 briefly discusses conducting a demonstration test. Section 7.0 provides guidance regarding preparation of a demonstration test report. Section 8.0 lists the references for this document. Appendix A provides checklists for the applicant to use in determining if all pertinent areas have been addressed prior to submittal to the Agency. Appendix B is a summary listing of sampling/analytical methods for PCB, PCDD, and PCDF. Appendix C provides guidance to the applicant in the form of answers to some frequently asked questions. Appendix D lists the addresses for OTS Headquarters and for the 10 Regional Offices. Appendix E is an annotated bibliography of sources of related information.

2.0 SUMMARY OF 40 CFR 761 REGULATIONS AND GUIDANCE

This section summarizes pertinent provisions of Title 40 of the Code of Federal Regulations, Part 761, (40 CFR 761) related to the disposal of PCBs. Part 761 establishes prohibitions of and requirements for the manufacture, processing, distribution in commerce, use, disposal, storage, and marking of PCBs and PCB items in the United States. These regulations were promulgated under authority of the Toxic Substances Control Act (TSCA, PL 94-469). 40 CFR 761 was promulgated May 31, 1979 (44 FR 31514). All references in this document refer to the revised 40 CFR 761 as of July 1, 1985.

2.1 General

The major sections of 40 CFR 761 are outlined in Table 1. The storage and disposal of PCBs are addressed in 40 CFR 761, Subpart D. In Subpart D, Section 761.60, disposal requirements are differentiated according to waste type and PCB concentration; Table 2 summarizes the disposal requirements of §761.60.

This guideline document is intended to provide guidance only for approval of PCB incinerators (§761.70) which may require approval by the Division Director of the Exposure Evaluation Division, Office of Toxic Substances (DD/EED). Disposal by chemical waste landfills (§761.75) or high efficiency boilers (§761.60(a)(2),(3)) is not addressed, since their disposal methods are approved by the appropriate Regional Administrator (RA). Also, storage of PCBs for disposal (§761.65) or decontamination (§761.79) is not addressed.

2.2 Approval Authority

Approval authority for PCB disposal facilities is stipulated in Section 761.60(i). Typically, the RA for the EPA region in which the facility will be operated has approval authority. However, in specific situations, the DD/EED has approval authority, in lieu of the RA. Table 3 summarizes EPA approval authority for PCB disposal facilities. Addresses for EPA headquarters and the regional offices are provided in Appendix D.

2.3 §761.70 Incinerators

Performance standards for PCB incinerators are described in §761.70. To be approved, incinerators must meet specific requirements. Requirements for destruction of liquid and nonliquid PCBs are provided in the regulation, §761.70(a) and §761.70(b), respectively. Paragraph 761.70(c) establishes requirements for maintaining records and §761.70(d) establishes requirements for obtaining approval of incinerators. Each of these paragraphs is discussed below.

Table 1. Outline of Major Sections of 40 CFR 761[a]

Subpart A - General
- 761.1 Applicability
- 761.3 Definitions
- 761.19 References

Subpart B - Manufacturing, Processing, Distribution in Commerce, and Use of PCBs and PCB Items
- 761.20 Prohibitions
- 761.30 Authorizations

Subpart C - Marking of PCBs and PCB Items
- 761.4 Marking requirements
- 761.45 Marking formats

Subpart D - Storage and Disposal
- 761.60 Disposal Requirements
  - (a) PCBs
  - (b) PCB Articles
  - (c) PCB Containers
  - (d) Spills
  - (e) Alternative Methods
  - (f) Written Notice
  - (g) Testing Procedures for PCB Concentration
  - (h) Export/Import for Disposal
  - (i) Approval Authority for Disposal Methods
- 761.65 Storage for Disposal
- 761.70 Incineration
  - (a) Liquid PCBs
  - (b) Nonliquid PCBs
  - (c) Maintenance of Data and Records
  - (d) Approval of Incinerators
- 761.75 Chemical Waste Landfills
- 761.79 Decontamination

Subpart E - Exemptions

Subparts F to I - [Reserved]

Subpart J - Records and Reports
- 761.180 Records and Monitoring

---

[a]Note: Some subparts are outlined in greater detail than others.

Table 2. Disposal Options by PCB Waste Categories (USEPA 1985)

PCB waste category	CFR section	PCB concentration (ppm)	Disposal method: Incinerator (§761.70)	Chemical waste landfill (§761.75)	High efficiency boiler (§761.60)	Alternative method (§761.60(e))	Method approved by region	Drain, dispose as solid waste	Decontamination
Mineral oil dielectric fluid	761.60[a][2]	50-500	x	x	x	x			
Other liquids	761.60[a][3]	50-500	x	x	x	x			
Nonliquids (soil, rags, debris)	761.60[a][4]	≥ 50	x	x					
Dredged materials and municipal sewage sludge	761.60[a][5]	≥ 50	x	x			x		
PCB transformers (drained and flushed)	761.60[b][1]	NS[a]	x	x					
PCB capacitors[b]	761.60[b][2]	≥ 500	x						
PCB capacitors	761.60[b][4]	50-500	x	x					
PCB hydraulic machines	761.60[b][3]	≥ 50						x[c,d]	
PCB contaminated electrical equipment (except capacitors)	761.60[b][4]							x[e]	
Other PCB articles	761.60[b][5]	≥ 500[f]	x	x[g]					
Other PCB articles	761.60[b][5]	50-500						x[e]	
PCB containers	761.60[c]	≥ 500[f]	x	x[d]					x[h]
PCB containers	761.60[c]	< 500						x[d]	x[h]
All other PCBs	761.60[a]	≥ 50	x			x			

[a]Not specified.
[b]Exemptions for some small capacitors.
[c]Must also be flushed if hydraulic fluid contains > 1,000 ppm PCBs and flushing solvent disposed of in accordance with §761.60(a).
[d]Drained liquid must be disposed of in accordance with §761.60(a).
[e]Must be drained of all free-flowing liquid. The disposal of the drained electrical equipment and other PCB articles is not regulated by 40 CFR 761. All liquids must be disposed of in accordance with paragraph (a)(2) or (3) of §761.60 [in an incinerator (§761.70), chemical waste landfill (§761.75), high efficiency boiler, or by an alternative method (§761.60(e))].
[f]Due to a typographical error, 40 CFR 761 [July 1, 1985, p. 163] erroneously states this value as 50 ppm; refer to Federal Register, 44, 31514-31568 (May 3, 1979).
[g]Drained of any free-flowing liquid and liquid incinerated in §761.70 incinerator.
[h]Decontaminated in compliance with §761.79.

Table 3. Summary of Permit Approval Authority

Type facility	Approval permit authority
Mobile incinerators or portable or stationary incinerators of identical design to be used in more than one EPA Region	Assistant Administrator for Pesticides and Toxic Substances (AA)*
Research and development methods disposing of > 500 lb PCB-containing material	AA[a]
Research and development methods disposing of ≦ 500 lb PCB-containing material	Regional Administrators (RAs)
Site-specific stationary incinerators to be used in any one EPA Region	RAs
Site-specific high efficiency boilers	RAs

[a]Delegated authority to the Division Director of the Exposure Evaluation Division, Office of Toxic Substances (DD/EED).

2.3.1 Liquid PCBs (§760.70(a))

For destruction of liquid PCBs, the incineration requirements include:

- A 2-sec dwell time at ≧ 1200°C (± 100°C) and ≧ 3% excess oxygen or 1.5-sec dwell time at ≧ 1600°C (± 100°C) and ≧ 2% excess oxygen in the stack gas;

- A system to automatically stop the PCB feed whenever the temperature or excess oxygen drops below the minimum levels specified above;

- A combustion efficiency (CE) of at least 99.9%, where:

$$CE = \frac{[CO_2]}{[CO_2] + [CO]} \times 100$$

  where $[CO_2]$ = concentration of carbon dioxide, and

  $[CO]$ = concentration of carbon monoxide;

  NOTE: This equation is rewritten from the published equation, $CE = [CO_2]/[CO_2] + [CO] \times 100$, which appears to be in error mathematically.

- Measurement and recording (at intervals no longer than 15 min) of the rate and quantity of PCBs fed;

- Continuously measuring and recording the temperature of the incineration process (combustion chamber);

- Monitoring and recording the concentrations of O_2 (continuously), CO (continuously), and CO_2 (periodically at a frequency specified by the OD/OTS or RA) in the stack emissions whenever PCBs are burned;

- A system to automatically stop the PCB feed whenever the monitoring operations specified for O_2, CO_2, and CO fail;

- Monitoring stack emissions for O_2, CO, CO_2, NO_x, HCl, total chlorinated organics (RCl), PCBs, and total particulate matter when the incinerator is first used for the disposal of PCBs or when the incinerator has been modified in a manner which may affect emissions; and

- Using water scrubbers to control HCl. Alternative methods for HCl control may be used if approved by the DD/EED or RA. For approval, EPA/OTS requires that the HCl removal system demonstrate a removal efficiency of 99%.

OTS policy also requires:

- Demonstrating that mass air emissions from the incinerator are no greater than 0.001 g PCB/kg of the PCB introduced to obtain a DRE of at least 99.9999% (six nines);

- Measurement of the stack emissions for chlorinated dibenzodioxins and dibenzofurans;

- Particulate matter emission levels of ≦ 180 mg/dscm (0.08 gr/dscf) when corrected to 7% oxygen; and

- Total PCB concentrations in scrubber water,* fly ash (if applicable), and bottom ash (if applicable) of ≦ 2 ppm.

2.3.2 Nonliquid PCBs (§761.70(b))

For destruction of nonliquid PCBs, the incineration requirements include:

- Demonstrating that mass air emissions from the incinerator are no greater than 0.001 g PCB/kg of the PCB introduced to obtain a DRE of at least 99.9999% (six nines); and

- All requirements for liquid PCB incinerators, except for the dwell time, temperature, and excess oxygen requirements [first bullet in 2.3.1 above] and the automatic feed shutoff requirement for inadequate temperature or oxygen levels [second bullet in 2.3.1 above].

OTS policy also requires:

- Measurement of the stack emissions for chlorinated dibenzodioxins and dibenzofurans;

- Particulate matter emission levels of ≦ 180 mg/dscm (0.08 gr/dscf) when corrected to 7% oxygen; and

- Total PCB concentrations in scrubber water,* fly ash (if applicable), and bottom ash (if applicable) of ≦ 2 ppm.

2.3.3 Maintenance of Data and Records (§761.70(c))

Paragraph 761.70(c) establishes requirements for maintenance of data and records for PCB incinerators. Records must be maintained according to the provisions established in §761.180. The records required are discussed in more detail in Section 4.0 of this report.

---

* Federal NPDES or state or local regulations may require more stringent control of PCBs (i.e., lower concentrations) in water discharged from the facility.

2.3.4 Other Requirements

Paragraph 761.70(d) establishes requirements for obtaining approval of PCB incinerators. These requirements include submitting an application for approval, submitting a trial burn plan (if a trial burn is required by the approving authority), and conducting a trial burn (if required). The required contents of a permit application and of a trial burn plan are presented and discussed in detail in Sections 4.0 and 5.0 of this document, respectively.

3.0 OFFICE OF TOXIC SUBSTANCES (OTS) PERMITTING PROCEDURES

The Code of Federal Regulations, Title 40, Part 761 (40 CFR 761) specifies that the Assistant Administrator (AA) for Pesticides and Toxic Substances has approval authority for certain PCB disposal facilities [approval authority has since been delegated to the Division Director, Exposure Evaluation Division of the Office of Toxic Substances (DD/EED) on January 23, 1984]; Regional Administrators (RAs) have approval authority for other facilities. Facilities for which the DD/EED has approval authority include PCB incinerators that are mobile or of identical design and intended to be used in more than one EPA region. Also included are certain research and development (R&D) methods that dispose of more than a total of 500 lb PCBs or PCB-contaminated material. RAs retain approval authority for site-specific facilities such as landfills, stationary incinerators, high-efficiency boilers, and research and development into PCB methods involving a total of 500 lb or less of PCB materials.

This section describes the process used by EPA/OTS to issue an operating permit and an R&D permit to the PCB incinerator applicant. Figure 1 shows the major steps in the operating permit process. Figure 2 gives a more detailed process diagram which includes the loops at various points in the operating permit process when additional information is required. Figure 3 shows the process for obtaining an R&D permit from OTS.

3.1 Establish Communications With the EPA Permit Writer

The permit applicant can facilitate the permitting process by establishing good communications with the EPA permit writer as early as possible. Good communication will minimize requests for additional information as well as submission of unnecessary information. Early in the process, the applicant and permit writer can discuss any special circumstances and also the necessity for submitting optional information discussed in these guidelines. In addition, advance notice of submissions will allow the permit writer to schedule the review in an orderly fashion.

3.2 Apply for an R&D Permit (Optional)

The purpose of a research and development (R&D) permit is to assist the facility operator in bringing the destruction process from conception to commercial operation. R&D permits can be issued for bench-scale operations, for pilot-scale systems, and for full-scale commercial systems. First-time applicants who do not have experience operating their systems, or who have not yet used their systems to destroy PCBs, are encouraged by EPA to obtain an R&D permit for "shakedown" of the process by conducting studies on a limited quantity of PCBs, prior to the commercial demonstration test.

An R&D permit application should consist of all of the applicable elements described in Table 4 in Section 4.0 (except as noted). The R&D application need not contain the detail required for an operating permit, but must be sufficient to demonstrate that the R&D activity will not present an unreasonable risk of injury to health or the environment. The applicant should also supply information on the specific objectives of the R&D activity.

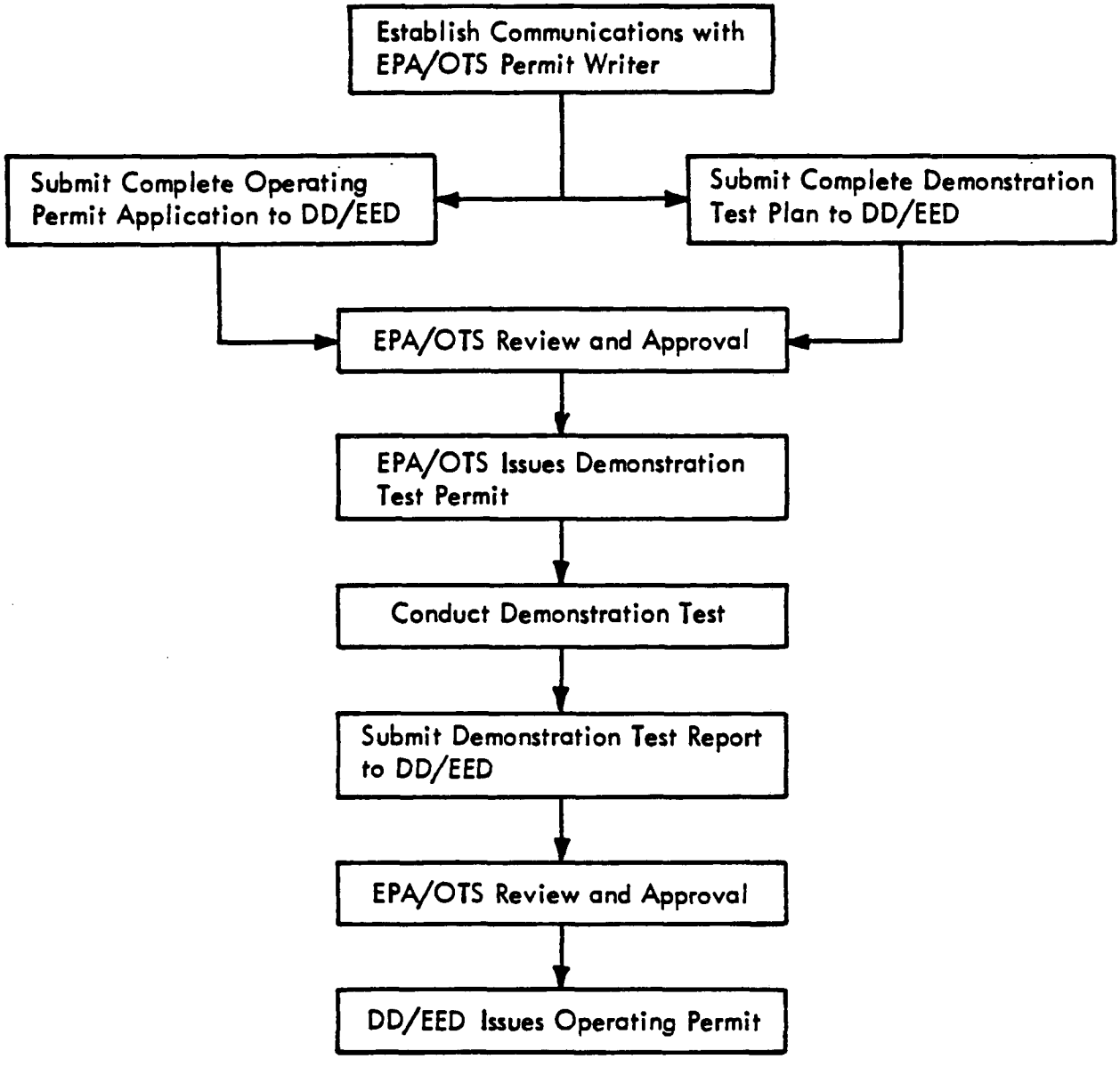

Figure 1. Major steps in the OTS operating permit process.

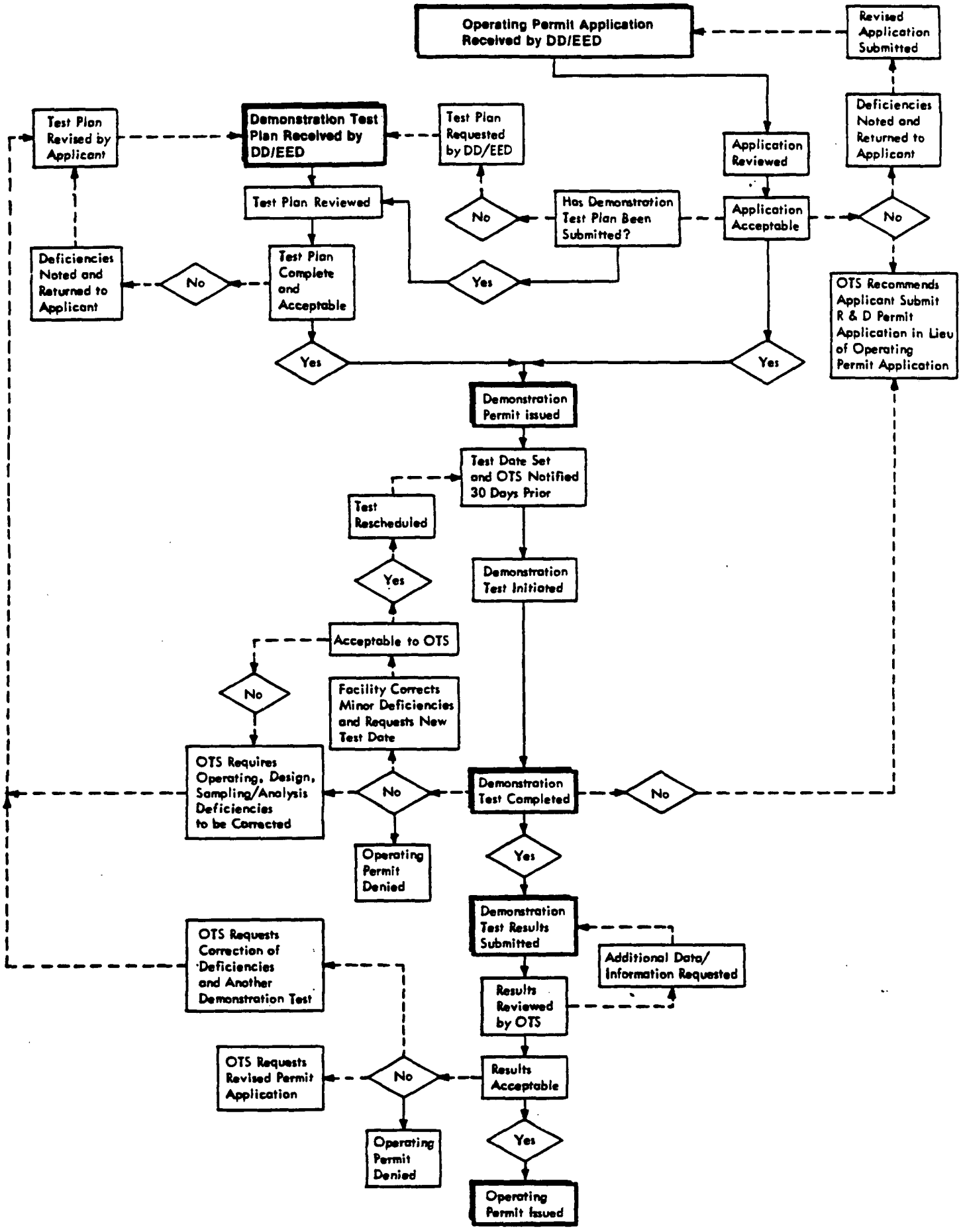

Figure 2. Process to obtain an operating permit from OTS.

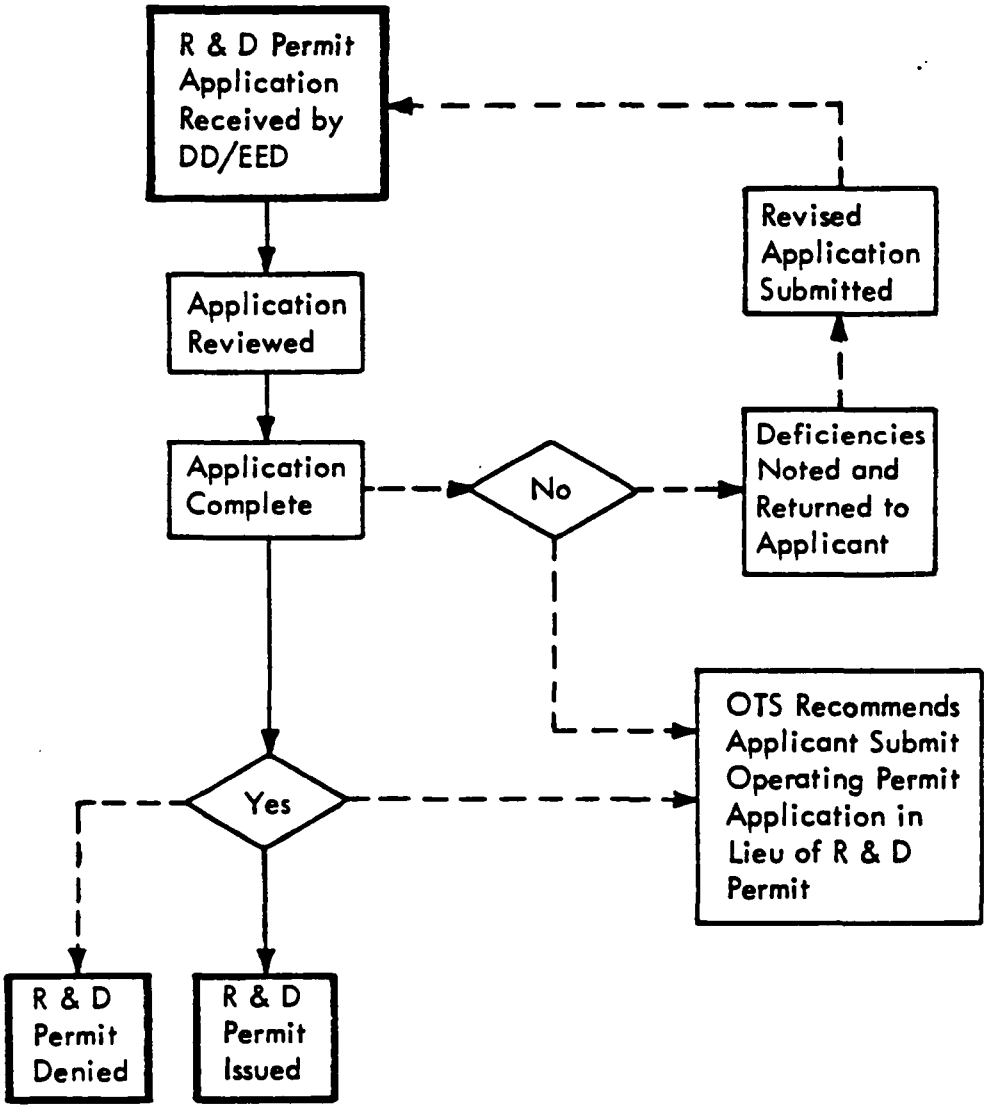

Figure 3. Research permitting process.

The R&D activity should provide process information and operating experience needed for application for an operating permit. The R&D results should be used for planning a full-scale demonstration such that there is a high probability of a successful demonstration. The R&D results may be appropriate for inclusion in the application for the operating permit.

R&D permits can be issued by the appropriate EPA Regional Administrator for the destruction of a total of 500 lb or less of PCB-contaminated material, or by the Division Director, Exposure Evaluation Division, Office of Toxic Substances (DD/EED), for the destruction of more than 500 lb of PCB-contaminated material. R&D permit applications can be submitted at any time, even if an application for a permit to operate commercially has already been submitted.

Upon receipt of an R&D permit application, EPA will review the document. If the application is incomplete or contains deficiencies, a notice of deficiencies will be sent to the applicant, who must then revise and resubmit the application. In some cases, EPA/OTS may recommend that the applicant submit an operating permit application in lieu of the R&D permit application, depending upon the circumstances involved. When a complete R&D permit application is approved by EPA/OTS, an R&D permit is issued.

According to 40 CFR 761.60(f), before commencing R&D work, a 30-day notice must be given to EPA regional, state, and local officials. After completion of the R&D activities, a report giving the results of the activities and test results must be submitted to EPA.

3.3 Submit Operating Permit Application and Demonstration Test Plan to DD/EED

The permit applicant must submit both an operating permit application and a demonstration test plan to DD/EED in order to receive a demonstration permit. Generally, the permit application and demonstration test plan should be separate, complete documents.

The permit application should be submitted as early as possible. Partial submissions are acceptable if the submission clearly indicates the portions of the application to be submitted later, and if the applicant and EPA permit writer agree that a preliminary review of a partial submission will be productive. The demonstration test plan may be submitted with or after the permit application. In any event, both the application and demonstration test plan must be determined by EPA to be complete before a demonstration permit can be issued.

Paragraph 761.70(d)(1) establishes the contents required in an application for a permit to operate a PCB incinerator. The suggested format for an incinerator permit application is presented in Table 4 in Section 4.0 of this document. A complete application must address each topic in the format given in Table 4. As an aid to the applicant in determining if all requirements for an application have been addressed, a checklist is provided in Appendix A.

A Demonstration Test Plan is a document prepared specifically for the demonstration tests and provides details of how the test will be conducted. A complete plan must include all the required information given in Table 6 in Section 5.0 of this document. Appendix A provides a checklist to aid the applicant in determining whether all required items have been addressed.

3.4 EPA/OTS Review of Permit Application and Demonstration Test Plan

EPA/OTS reviews the permit application and demonstration test plan for completeness, accuracy, clarity, and technical viability. If either document is unacceptable to EPA, a notice of deficiencies will be sent to the applicant. The deficiencies must be corrected in a revised application or test plan, and the revised document(s) must be submitted to the DD/EED. In some cases, this process may need to be repeated more than once.

3.5 EPA/OTS Issues Demonstration Test Permit

After the EPA approves the permit application and demonstration test plan, the DD/EED will issue a demonstration permit. A demonstration permit is required prior to destroying any PCBs in a process demonstration. The demonstration permit will specify a limited amount of PCB-containing material which can be destroyed during the demonstration and other conditions based on the applicants permit application and demonstration test plan. The time period for which the demonstration permit is valid also will be limited.

3.6 Conduct Demonstration Test

A demonstration test (trial burn) is scheduled at a date agreeable to both the applicant and EPA/OTS. It is desirable that EPA/OTS have at least 60-days' notice prior to the test; 30 days' notice is required.

If any modifications to the test plan are required prior to the demonstration test, EPA/OTS (permit writer) should be notified in writing at least 14 days prior to the test. Also, if events require that the plan be significantly modified during the test demonstration, then the permit writer should be contacted immediately to discuss the implications of any modifications. As with normal operation, any significant deviations from or alterations in the test plan must be documented in writing to EPA/OTS (permit writer) within 10 days after the event. Throughout the test demonstration, an "event log" should be maintained. This log should be submitted as part of the demonstration test report.

The test should be conducted under conditions simulating normal commercial operations. Operating permit requirements usually reflect the systems' operating conditions during the demonstration test, and conditions used in the tests become conditions allowed in the operating permit. Therefore, the applicant should give very careful consideration to the design and conduct of the demonstration test.

If the demonstration test is initiated, but cannot be completed for some reason, EPA/OTS can exercise several options. The first option is to deny the operating permit without further consideration, which is rarely done.

A second option is to recommend that the applicant submit an R&D permit application in order to have a chance to correct operating deficiencies prior to another demonstration. The third option is to reschedule the test, which is usually done when minor deficiencies in the operating process cause the problem. A fourth option is to require that the application or test plan be revised and resubmitted before issuing another demonstration permit; this option is usually used when major design changes must be made or major operating deficiencies must be corrected before another demonstration test can be performed.

3.7 Submit Demonstration Test Report to DD/EED

After a complete demonstration test has been performed, a report of the results must be made and submitted to the DD/EED. The format and required contents of the report are shown in Table 10 in Section 7.0 of this document. The test report must contain all the information described in Section 7.0 of this document.

3.8 EPA/OTS Review of the Demonstration Test Report

Upon receipt, EPA/OTS will review the demonstration test report submitted by the applicant. If the report is incomplete or unclear, EPA will request that the applicant submit any additional information or data needed. If the results of the test are unacceptable, EPA may deny the operating permit, request that another demonstration test plan be submitted for approval prior to conducting another demonstration test, or require that a revised permit application be submitted for approval. If the test results are acceptable, EPA/OTS can issue an operating permit to the applicant.

3.9 DD/EED Issues an Operating Permit

An operating permit allows the operator to commercially operate. After acceptance of the permit application and demonstration test results, the DD/EED will issue a final operating permit. Generally, the final operating permit will specify the matrix(ces) which can be incinerated, an upper limit on PCB concentration in the feed, and an effective period of up to 3 years from the date of issuance.

For a renewal approval, additional information and/or testing of the process may be required. In order to continue the effectiveness of a permit pending EPA action on reissuance of the permit, the operator must submit a renewal request letter to EPA at least 90 days, but not more than 180 days, prior to the expiration date of the permit.

4.0 PERMIT APPLICATION FORMAT

Paragraph 761.70(d)(1) establishes the contents required in an application for a permit to operate a PCB incinerator. The suggested format for the permit application for incineration or other thermal destruction systems is presented in Table 4. Each major item presented in the permit format is discussed in the following sections. A checklist is provided in Appendix A to aid the applicant in determining, prior to submittal, if all requirements for an application to operate a PCB incinerator have been addressed.

Research and development permit applications should follow the same format as operating permit applications although less detail is generally required.

4.1 Permit Application Cover

Each submission must have a permit application cover. The application cover format is presented in Figure 4. If the application or the appendices must be bound separately (i.e., multiple volumes), number each volume of the submission in order in the upper right hand corner of the cover ("Volume m of n)". The cover of each volume should have the full cover information. The principal manager is the person identified by the applicant as the primary contact for written or verbal communications from the EPA permit writer.

4.2 Section I - Summary

The applicant is encouraged to begin the permit application with a short summary presenting the document organization and any pertinent background information.

4.3 Section II - Project Organization

Briefly describe the organization for operating the facility. Provide an organization chart identifying key individuals (position titles and actual personnel, if known). The organizational chart should primarily address those personnel directly involved in the project. The corporate structure (e.g., relationship of company officers) is only necessary if it impacts on the chain of command for the PCB destruction facility. Personnel who should be identified include:

- Person(s) responsible for obtaining permit;
- Project manager;
- Facility manager;
- Operations supervisor;
- Reviewing engineer;
- Maintenance supervisor;
- Quality assurance officer;
- Safety officer;
- Laboratory personnel;
- Person(s) responsible for training;
- Person(s) responsible for demonstration test;
- Person responsible for operation of monitoring system; and
- Person responsible for record keeping and reporting.

Table 4. Format for Permit Applications for PCB Incinerators

i	Permit Application Cover
ii	Table of Contents
I.	Summary
II.	Project Organization
III.	Waste Description
IV.	Process Engineering Description
V.	Monitoring Plan
VI.	Monitoring Procedures
VII.	Data Reporting/Recordkeeping
VIII.	Inspection Procedures
IX.	Spill Prevention Control and Countermeasures Plan
X.	Safety Plan
XI.	Training Plan
XII.	Plans for a Demonstration (Trial Burn)[a]
XIII.	Test Data or Engineering Performance Calculations
XIV.	Other Permits/Approvals
XV.	Schedule of Pre-operation Events
XVI.	Quality Assurance Plan
XVII.	Standard Operating Procedures
XVIII.	Closure Plan

[a]For a research and development permit, this section would present the planned research activities.

Volume m of n

(PRELIMINARY) PERMIT APPLICATION

PCB DESTRUCTION UNIT
[Type and location]
[Test site for mobile units]
Submission date: _____

Submission number [sequential numbering, beginning with 1]

Submitted by:

[Company name and address]
[Principal manager and phone no.]

Submitted to:

Division Director, Exposure Evaluation Division
c/o Document Control Officer (TS-790)
Office of Toxic Substances
U.S. Environmental Protection Agency
Room E-201
401 M Street S.W.
Washington, DC 20460

Figure 4. Example permit application cover.

4.4 Section III - Waste Description

A description of the waste(s) intended to be destroyed in the unit should be provided. As a minimum provide the following information:

- The type (liquid or solid) of waste to be destroyed;
- The proposed total waste and PCB feed rates; and
- The matrix and composition of the waste, including major and minor constituents, and expected PCB concentration. Heating value, viscosity, Cl, ash, water content, and other characteristics of the waste material should be included, if appropriate.

4.5 Section IV - Process Engineering Description

The agency needs sufficient information about a PCB destruction process to be able to evaluate the permit application. This information will include detailed descriptions of the facility site, PCB and PCB-item handling, process design and operation, pollution control equipment, and anticipated performance. To this end, a list of parameters to be described in the plan is presented below for guidance. The list is not necessarily inclusive. Permit applicants should provide additional information where appropriate.

The following process design information should be provided for thermal destruction systems. If a category is not applicable, so state.

4.5.1 General

- Facility location including site map;
- Layout diagram and description of the plant or mobile unit;
- Detailed engineering drawings;
- Process flow diagram (schematic diagram of the system) and description;
- Intended location of the mobile unit or facility; and
- Intended location of where the unit will be stored when not in use (if mobile unit).

4.5.2 Waste Feed System

- Narrative description of the waste feed system (e.g., equipment and procedures for unloading, storage, and transfer of the PCB materials, etc.). Discussion of provisions to prevent leakage;
- Description of the waste preparation system if applicable (e.g., filtration, blending, crushing, preheating, etc.);
- Waste feed storage capacity and average waste feed stored at this location (in gallons, number of days' supply, etc.);
- Volume of waste expected to be handled at this facility per month or other time period; and
- Description of waste feed rate measurement method [additional information on measurement methods is available in (Beard and Schaum 1978)].

4.5.3 Waste Feed Cutoff System

Describe the automatic cutoff system for PCB feed, including the time-delay system used before shutoff. Discuss the system operation for shutoff when:

- Combustion chamber temperature is less than allowable;
- Excess O_2 value is lower than allowable;
- Retention time is lower than allowable;
- Burner flameout occurs;
- CO and CO_2 concentration in exhaust gases are different from ranges allowed in permit; and
- Other specific process conditions are different from those required by the permit (e.g., scrubber water flow rate is less than allowable).

4.5.4 Destruction System

- Detailed narrative description of the thermal destruction unit including engineering data (such as chamber volume), temperature, flow rates, etc.;
- Engineering diagrams;
- Design capacity of the system;
- Description of how combustion chamber volume is derived;
- Heating values for waste feed and auxiliary fuel;
- Feed rate for waste feed and auxiliary fuel;
- Exit temperature of gases;
- Calculations showing the retention time at a temperature required by the regulation [additional information is available in (Beard and Schaum 1978)];
- Description of how flow rates are regulated so that the specified retention time is maintained;
- Normal operating values and acceptable ranges for the essential operating parameters (e.g., chamber temperature, chamber pressure, volume flow rate, waste feed rate, retention time, O_2, CO, CO_2) being measured; and
- Expected destruction efficiency of this unit, based on design criteria, or pilot tests.

4.5.5 Pollution Control System (PCS)

A complete description of the type of pollution control system should be provided. In addition to providing diagrams of the system, information on the major design parameters also should be included such as:

- Total exhaust gas flow rate (dscm or dscf);
- Pressure drop across the system (Pascal or in. H_2O);
- Exhaust gas temperature (°C or °F) in the stack;
- Type and concentration of pollutants (control system inlet and outlet) if available; and
- Design removal efficiency (provide calculation for basis).

Discuss the fate of associated waste streams (e.g., ESP ash, scrubber liquid). Also provide a description of the warning system, if any, used to signal PCS malfunction.

Provide information on the normal operating values and acceptable ranges for significant operating variables of the scrubber, fabric filter, ESP, or other device as described below. If information is available in the form of vendor performance specifications, it may be substituted.

1. Scrubber

- Scrubber liquid flow rate (gpm);
- Pressure drop across mist eliminator (in. H_2O);
- Makeup liquid flow rate (gpm);
- Nozzle operating pressure (psi);
- pH of scrubbing liquid;
- Liquid discharge rate (gpm);
- Lime or other conditioning agent feed rate;
- Liquid/gas flow rate (gpm/acfm); and
- Any other information on significant operating variables not mentioned here.

2. Fabric Filter

- Differential static pressure (in. H_2O) between clean and dirty side;
- Dew point of gases;
- Description of temperature protection device or fabric filter bypass system;
- Air/cloth ratio;
- Bag material (resistant to chemical and physical properties of the stack gas);
- Description of bag cleaning system;
- System for ash removal; and
- Any other information on significant operating variables not mentioned here.

3. ESP

- No. of fields;
- No. of Transformer-Rectifier (T.R.) sets;
- Total plate area;
- Primary voltage;
- Primary current;
- ESP voltage (secondary);
- ESP current (secondary);
- Spark rate;
- Description of rapper system;
- System for ash removal;
- Dust level in hopper indicator; and
- Any other information on significant operating variables not mentioned here.

4.5.6 Summary of Process Operating Parameters

A summary should be provided which lists target values as well as upper and lower boundaries for all measured operating parameters, instrument settings, and control equipment parameters. All values must be reported in common, consistent units. The application must also describe the action to be taken whenever a parameter deviates outside the boundary value. These actions may include adjusting the operating conditions, stopping the PCB feed, shutting down the process, etc. The time allowable for corrective action before shut-down or other action must also be specified.

4.6 Section V - Monitoring Plan

This section of the application provides an overview of the monitoring to be conducted; specifics of the monitoring equipment and procedures are presented in Section VI of the Permit Application.

The application must include a monitoring plan, i.e., a summary of the strategy to be followed in monitoring the operating and emission parameters. The monitoring objective should be to obtain results which are representative. In cases where representative samples are not obtainable, a worst case result should be obtained. In cases where problems can be anticipated (e.g., instrument failure), contingencies should be included in the plan.

The monitoring plan should include:

- Monitoring locations;
- Parameters to be monitored;
- Monitoring methods; and
- Monitoring frequency.

A schematic diagram can be used to illustrate the monitoring points; Figure 5 is an example. The specific location of the sampling point should be discussed briefly in the narrative; e.g., the liquid waste sample will be taken from the feed line just prior to the injection nozzle. Other important parameters of the monitoring plan can be concisely presented in a tabular format; Table 5 is an example monitoring plan summary.

Thermal destruction of PCBs by incineration must follow the guidelines established in §761.70(a). At a minimum, monitoring and recording of combustion products and incineration operations shall be conducted for the following parameters whenever the incinerator is incinerating PCBs: (i) O_2; (ii) CO; and (iii) CO_2. The O_2 and CO measurements must be continuous. (It is recommended that a measurement value be taken at least every 15 sec and a value recorded at least every minute.) If these minimum requirements cannot be met, then justification should be provided for why less frequent measurement/recording times are acceptable. The CO_2 measurements, defined as periodic, must be made at least every 15 min. Operating parameters that must be monitored include waste feed rates, combustion temperature, and residence time. Acceptable operating ranges for these parameters must be specified in the process engineering information, as described in Section 4.5.6, above.

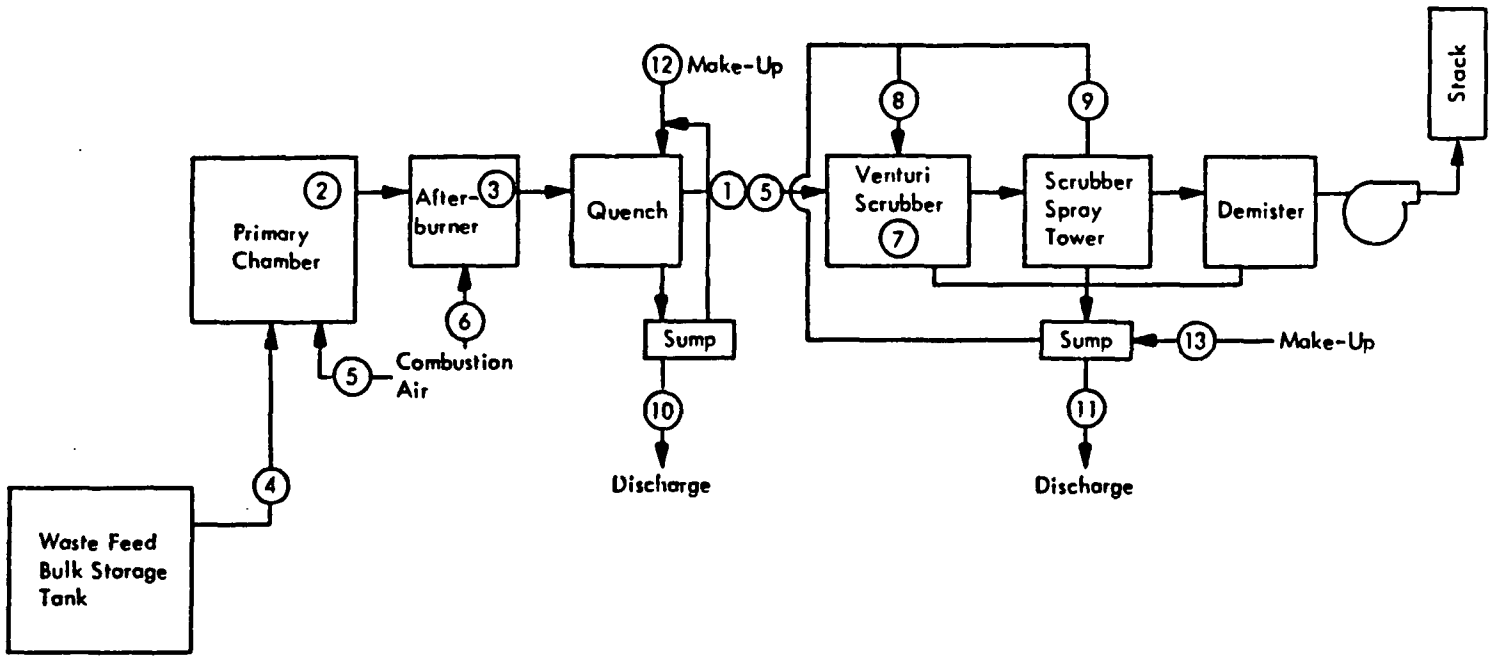

Figure 5. Schematic of sampling and monitoring points for an incinerator.

Table 5. Example Summary of Monitoring Plan for a Mobile Incinerator

Parameter	Method	Frequency	Location[a]	Contingency
A. Oxygen	Extractive Continuous Emissions Monitor (CEM)	Continuously	1	Stop Operations/Repair System (SORS)
B. Carbon monoxide	Extractive CEM	Continuously	1	SORS
C. Carbon dioxide	Extractive CEM	Continuously	1	SORS
D. Combustion temperature	Shielded thermocouple	Continuously	2, 3	Second System
E. Incinerator pressure	Pressure transducer	Continuously	2, 3	SORS
F. Waste feed rate	Volumetric flow meter	Continuously	4	SORS
G. Residence time	Gas Velocity (Annubar®)	Continuously	5, 6	SORS
H. Combustion efficiency	Automated calculation	Continuously	-	Manual calculation
I. Venturi Pressure drop	Pressure transducer	Continuously	7	SORS
J. Venturi scrubber liquid flow	Rotameter	Continuously	8	SORS
K. Spray tower liquid flow	Rotameter	Continuously	9	SORS
L. Quench water discharge	Volumetric flow meter	Continuously	10	SORS
M. Scrubber liquid discharge	Volumetric flow meter	Continuously	11	SORS
N. Quench water makeup	Volumetric flow meter	Continuously	12	SORS
O. Scrubber liquid makeup	Volumetric flow meter	Continuously	13	SORS

[a]Refers to Figure 2.

According to §761.70, when an incinerator is first used to destroy PCBs, sampling of the stack emissions products must be conducted and must include measurement of: O_2, CO, CO_2, NO_x, HCl, RCl, PCBs, and total particulate matter. The measurement of these parameters is discussed in Section 5.0 (Demonstration Test Plans) of this document.

4.7 Section VI - Monitoring Procedures

This section of the permit application should provide a detailed discussion of the monitoring methods which will be used. The discussion for each parameter to be monitored should include:

- Monitor manufacturer;
- Model number;
- Principle of operation;
- Instrument range and accuracy;
- Operating temperature range of monitor, if monitor is *in situ* type;
- Description of the system for removal of the sample if the monitor is extractive, including sample conditioning system;
- Location of the sample point(s) and an explanation of why chosen and why the point(s) is representative;
- Description of the calibration procedure and frequency;
- Description of the maintenance procedures and frequency;
- Description of the data recording and storage system;
- Description of the system for triggering automatic feed shutoff, if applicable;
- Contingency for monitor failure; e.g., install and calibrate second monitor; and
- Description of routine maintenance procedures.
- Evidence that the monitoring method will generate suitable data (e.g., performance data from a non-PCB burn of the system).

4.8 Section VII - Data Reporting/Recordkeeping

The permit application shall explicitly state what data are to be recorded (including units) and how the data records are to be maintained. Include example calculations, units of measurements, and example record reporting forms. Paragraphs 761.180(b), and 761.180(c) establish the minimum

data record requirements for thermal destruction units. Minimum records include a summary report for the previous calendar year which contains:

- Date PCBs and PCB items were received and from whom;
- Date PCBs and PCB items (including process waste which has not been demonstrated to be free of PCB contamination) were disposed of or transferred;
- Summary of the total weight (kg) of PCBs and PCB articles in containers and PCBs in transformers which have been received, transferred to other facilities, and retained at the facility; and
- Summary of the total number of PCB articles or PCB equipment not in containers which have been received, transferred to other facilities, and retained at the facility.

The following information also must be maintained on site:

- For periods when PCBs are being incinerated, the rate and quantity of PCBs fed, the temperature of the combustion process, and the O_2, CO, and CO_2 emission levels;
- The demonstration test (trial burn) results;
- The total weight (kg) of solid residues generated;
- The total weight (kg) of solid residues disposed of in chemical waste landfills;
- The total weight (kg) of solid residues remaining on site; and
- The date, time, and duration of any suspension of incineration operations due to automatic shutoff of feed or any other reason for shutdown other than routine maintenance or moving to another disposal site [pursuant to §761.70(a)(8)], as well as an explanation of the circumstances causing suspension of operation. (Note: This information must be sent to the RA within 30 days of the event.)
- Additional information as specified by the RA or DD/EED.

4.9 Section VIII - Inspection Procedures

The permit application shall identify the routine inspection procedures used to identify problems (e.g., waste feed leak) and malfunctions (e.g., broken bags in the baghouse) associated with the facility. The frequency of inspections also should be addressed. Inspection procedures should be identified for items such as:

- Waste feed system;
- Destruction system;
- Waste feed cutoff system;
- Pollution control system;
- Process alarms; and
- Fire extinguisher system

4.10 Section IX - Spill Prevention Control and Countermeasures Plan

Describe the procedures (including system design) which will be used to prevent spills of PCBs. Also describe the procedures which will be followed should a spill occur. Coast Guard regulations specifying spill prevention control and countermeasure plans (40 CFR 112.7) can be used as an example for the type of information which should be addressed; however, the plan provided in the permit application need not be in the format or detail specified in 40 CFR 112.7.

4.11 Section X - Safety Plan

This section addresses the safety program which will be initiated to protect workers and other humans from PCB exposure or other health hazards. Identify specific items (e.g., protective clothing) of the program for ensuring safe routine operations. Procedures for preventing worker/population exposure in the case of an equipment malfunction also should be addressed; procedures for stopping waste feed, shutting down the process, and controlling emissions in the event of a malfunction should be addressed. Provisions for prevention and control of fires, explosions, electrical outages, etc., also should be addressed.

4.12 Section XI - Training Plan

The permit application should present a description of the training program which will be initiated to assure workers are trained in items appropriate to their jobs including:

- Equipment operation (in accordance with standard operating procedures);
- Emergency shut-down procedures;
- Use of protective clothing;
- Waste handling;
- Spill prevention/control;
- Fire control; and
- Hazards of PCBs.

4.13 Section XII - Plans for a Demonstration (Trial Burn)

This section of the permit should briefly summarize the applicant's plans for conducting a demonstration test; a separate detailed plan is required prior to conducting a demonstration test (see Section 5.0 of this document). However, summary information which should be presented in this section includes:

- Tentative date (month/year) for the test;
- Tentative location for the test;
- Parameters to be tested;
- Type waste to be used; and
- Expected date for submittal of test demonstration plan.

If the applicant feels a test demonstration may not be needed for this facility, the applicant should present a rationale for not conducting a demonstration. (It is rare than a demonstration test will not be required. One of the few reasons for not requiring a trial burn is that an identical unit has been previously tested and permitted.)

4.14 Section XIII - Test Data or Engineering Performance Calculations

The applicant should present a summary of any relevant test data from R&D activities, non-PCB burns, or other sources, or any engineering calculations which support the ability of the thermal destruction system to destroy PCBs. Detailed test results need not be presented in this section, but instead may be provided as an appendix, or referenced if already on file with the Office of Toxic Substances.

4.15 Section XIV - Other Permits/Approvals

List other permits/approvals which have been obtained or are being sought for this unit; identify the permitting agency and the person to contact for additional information (permit writer). Relevant permits include PCB research and development permits, operating permits issued by an RA, state or local permits to operate, RCRA permits, NPDES permits, and DOT permits.

4.16 Section XV - Schedule of Pre-Operation Events

Provide a proposed schedule (month and year) for complying with the regulatory requirements associated with approval of the facility. Scheduled items to be addressed include: beginning construction date, construction completion date, submittal of demonstration test plan, equipment shakedown period, initiation of demonstration test, submittal of demonstration test results, and initial operating date.

4.17 Section XVI - Quality Assurance Plan

Each permit application must include a Quality Assurance (QA) Plan. Note that the QA Plan must address all data-generating activities (e.g., process monitors and controllers, not just chemical laboratory analysis). This plan should conform to the specifications established in "Interim Guidelines and Specifications for Preparing Quality Assurance Project Plans" (USEPA, 1980) and must address all measurement (i.e., monitoring) parameters. Additional guidance in the preparation of QA project plans is available in "Quality Assurance Program Plan for the Office of Toxic Substances" (USEPA 1983b).

The purpose of the Quality Assurance Plan is to establish a specific program to: (a) help assure that the monitoring data meet specific quality objectives, and (b) routinely assess the quality of the monitoring data. Appropriate QA is imperative. If the data (physical or chemical measurement)

are of unknown quality, the data are unacceptable and cannot be used to show a facility is operating within permit requirements. Data of poor quality, as long as the quality is known, may be acceptable depending on whether or not the parameter is critical to PCB destruction.

The Quality Assurance Plan should address the following items:

- Organization and responsibility for QA;
- Quality assurance objectives for each measurement parameter (e.g., CO, CO_2, O_2 combustion temperature in terms of accuracy, precision, completeness, representativeness, and compatibility);
- Monitoring procedures (brief description);
- Specific calibration procedures and frequency;
- Procedures for data reduction, validation, and reporting;
- Specific internal quality control checks and frequency;
- Audit procedures and frequency;
- Preventative maintenance procedures and frequency;
- Specific routine procedures to assess accuracy, precision, and completeness;
- Procedures for corrective action; and
- Quality assurance reports to management.

Each of these items is discussed in "Interim Guidelines and Specifications for Preparing Quality Assurance Plans"; the applicant is advised to follow this document.

4.18 Section XVII - Standard Operating Procedures

A summary of the standard operating procedures (SOP) should be included in this chapter. The SOP should consist of the procedures available to the facility operators for use in plant operations. The complete SOP should be included as an appendix. Applicants may submit a copy of the process operating manual to satisfy this requirement.

Applicants should be required to develop a SOP and submit it to EPA two weeks prior to the demonstration. The SOP:

- Assures that applicants have reviewed the operations in detail;
- Gives EPA opportunity to review and become familiar with the operations prior to the on-site audit; and
- May be used as a tool for training new employees, which gives some assurance that the employees have received a minimum of training.

An SOP should be a step-by-step procedure; however, details of procedures such as the use of equipment (e.g., Modified Method 5) may be omitted but must be referenced. Divergence from the SOP during trials or commercial runs should be documented and significant modifications should be submitted to EPA. For convenience of use, lab procedures should be separate from system operational procedures.

The SOP should be part of the training plan. Each new employee should sign and date a statement indicating that the employee has read and understood the SOP.

4.19 Section XVIII - Closure Plan

The closure plan for the facility should address two situations:

- For mobile units, closure of the facility at each site prior to moving to a new site. Closure must address items such as decontamination of the equipment, placarding any contaminated equipment, and disposal of any wastes generated from decontamination or cleanup activities; and

- For both mobile and stationary facilities, permanent closure (i.e., removal from service).

The closure plan(s) should address:

- Responsible personnel;
- Disposal of by-product wastes on a routine basis;
- Disposal of equipment; and
- Financial responsibility of the company.

5.0 DEMONSTRATION TEST PLANS

This section presents the suggested format for a Demonstration Test (Trial Burn) Plan and briefly discusses the major items of information which must be submitted in the plan.

A Demonstration Test Plan is a document prepared specifically for the demonstration tests and provides details of how the test will be conducted. This includes details of: when and where the demonstration will be conducted and by whom; process/pollution control operating parameters to be maintained during the test; waste feed quantity and type; parameters to be monitored/sampled; sampling/monitoring locations, frequency, and methods; sample analysis methods; equations for calculating results; and quality assurance procedures.

5.1 General

The minimum contents required in the trial burn plan are specified in §761.70(d)(2) as follows:

- Date of trial burn;
- Quantity and type of PCBs and PCB items to be incinerated;
- Parameters to be monitored and location of sampling points;
- Sampling frequency and methods and schedules for sample analyses;
- Date and location of analyses; and
- Name, address, and qualifications of persons who will review analytical results and other pertinent data, and who will perform a technical evaluation of the effectiveness of the trial burn.

5.2 Contents of a Demonstration Test Plan

The Demonstration Test Plan must contain all the required information as described in this document. Table 6 presents the format for a Demonstration Test Plan. Contents of the Demonstration Test Plan, prepared according to the recommended format, are discussed in the following paragraphs. Appendix A provides a checklist to aid the applicant in determining whether all required items have been addressed.

5.2.1 Test Demonstration Plan Cover

A cover must be provided for the Demonstration Test Plan. Figure 6 presents the cover format to be used. If multiple volumes are submitted, provide a cover for each volume and number each volume in the upper right hand corner, "Volume m of n."

5.2.2 Section I - Summary

The applicant should begin the plan with a short summary of the document. The summary should indicate when, where, and by whom the test will be conducted. A brief background discussion on the unit to be tested also is useful (e.g; type of unit, intended use, summary of previous tests or operations).

Table 6. Format of Demonstration Test Plan for Incinerators

i	Test Plan Cover
ii	Table of Contents
I.	Summary
II.	Project Organization
III.	Process Engineering Information (new information to application)
IV.	Process Operation
V.	Sampling and Monitoring Plan
VI.	Sampling and Analysis Procedures
VII.	Monitoring Procedures
VIII.	Data Reporting
IX.	Miscellaneous Tests
X.	Test Schedule
XI.	QA Plan (addenda to Permit QA Plan)
XII.	Standard Operating Procedures (addenda to Permit SOP)

Volume m of n

(PRELIMINARY) DEMONSTRATION TEST PLAN

PCB DESTRUCTION UNIT
[Type and location]
[Test site for mobile units]
Proposed test dates: _____
Submission date: _____

Submission number [in sequence with permit application submissions]

Submitted by:

[Company name and address]
[Principal manager and phone no.]

Submitted to:

Division Director, Exposure
Evaluation Division
c/o Document Control Officer (TS-790)
Office of Toxic Substances
U.S. Environmental Protection Agency
Room E-201
Washington, DC 20460

Figure 6. Cover for the Demonstration Test Plan.

5.2.3 Section II - Project Organization

Provide an organizational chart and narrative description, as necessary, to identify the key personnel for the project. Identify personnel who have overall authority/responsibility for conducting the demonstration test and their relationship to key personnel having overall authority/responsibility for the project. It is not necessary to repeat detailed information on overall project authority/responsibility that has previously been submitted in the permit application. However, a consolidated organizational chart is generally advisable so that lines of authority can be identified. Key areas of responsibility which should be identified include:

- Overall project responsibility;
- Facilities manager;
- Test demonstration coordinator/manager;
- Operations manager;
- Sampling crew chief;
- Monitoring systems operator;
- Analytical manager/key analyst;
- Quality assurance officer;
- Safety officer; and
- Operators and laboratory technicians.

Qualifications of the key individuals who will be operating the system and conducting the sampling, monitoring, and analysis are to be provided with the Demonstration Test Plan.

5.2.4 Section III - Process Engineering Information

This section provides a general overview of the process, including a simplified flow diagram. Detailed information about the process should be in the permit application and may be referenced. However, if modifications have been made to the system since the permit application, these modifications should be addressed. Similarly, if any modifications to the normal process systems will be required during the demonstration, these should be addressed; for example, if waste will be pumped from 55-gal. drums during the demonstration, in lieu of using a bulk feed storage tank which will be used during normal operation, this deviation must be noted and explained.

5.2.5 Section IV - Process Operation Test Parameters

This section presents the operating parameters to be maintained during the Demonstration Test. Information which should be presented includes:

- Operational plan;
- Process operating parameters;
- Anticipated emission levels; and
- PCBs or PCB items to be fed as waste.

A brief operational plan should be provided. This plan may take the form of a detailed schedule of events. In the operational plan explain the operating parameters which will be maintained while bringing the unit on-line, while conducting the demonstration and while taking the unit off-line.

For example, will the unit be brought on line and its operation first be demonstrated using auxiliary fuel? Will a non-PCB "waste feed" first be used to demonstrate safe operation?

The process operating conditions and anticipated emissions can be summarized in a tabular format. Table 7 is an example "test parameter summary" for an incineration system. Note that control limits (i.e. acceptable ranges) are presented for key operating parameters.

Identify the waste feed which will be used during the demonstration test. State the type of feed, physical state, heat content, and composition including anticipated PCB concentration. State the total quantity of feed to be used during the demonstration. Explain how the waste feed used for the demonstration compares to the waste which will normally be processed during routine operation; i.e., the same, worst case condition, mixture of anticipated wastes. Explain the provisions established for storage of the wastes prior to and during the demonstration, if different from normal.

5.2.6 Section V - Sampling and Monitoring Plan

This section presents the sampling and monitoring plan for the demonstration test. The plan should be detailed and specific to the demonstration. The plan should address all sampling and monitoring which will be conducted during the demonstration; i.e., both sampling/monitoring which will be routinely conducted during normal operation and sampling/monitoring which will be conducted only during the demonstration test. A tabular format, with narrative explanation, as necessary, can be used to summarize the sampling and monitoring plan. The sampling/monitoring plan should include the following elements:

- A description of the system or process being sampled or monitored (including sampling location) and breakdown of the process into discrete sampling units (stack emissions, liquid waste, ash, etc.).

- The number of tests to be conducted and the schedule. Generally, three tests are conducted on successive days for incinerators.

- The objective of the sampling or monitoring for each unit (e.g., collect a "representative" sample; follow an EPA test protocol; or collect a "worst case" sample).

- The parameters to be tested: List the compounds, physical measurements and media.

- The sampling or monitoring methods: List the methods to be used. Detailed description of the methods may be presented in this section or an appendix.

- The sample analysis method: List the analytical methods to be used. Detailed description of the methods may be presented in this section or an appendix.

Table 7. Example Summary of Anticipated Test Parameters for an Incinerator

Parameter	Anticipated value	Control limits	Required value
Fuel/Waste Feed			
Waste feed rate (kg/hr)	100	85-115	NA[a]
PCB concentration in feed (g/kg)	350	NA	NA
Total chlorine in feed (g/kg)	250	NA	NA
PCB feed rate (kg/hr)	35	NA	NA
Chlorine feed rate (kg/hr)	250	NA	NA
Auxiliary fuel feed rate (kg/hr)	15	NA	NA
Total thermal duty (10^6 BTU/hr)	4.5	< 5.0	NA
Combustion Conditions			
Combustion air flow rate (acm/min)	60	< 65	< 65
Residence time (sec)	2.2	< 2	2
Destruction temperature (°C)	1,250	1,150-1,350	1,200 ± 100
Combustion gas oxygen (%)	5	< 4	3
Combustion gas carbon dioxide (%)	12	NA	NA
Combustion gas carbon monoxide (ppm)	20	< 100	NA
Combustion efficiency (%)	99.98	> 99.9	99.9
Emissions			
Combustion gas NO_x (ppm)	40	NA	NA
HCl removal (%)	99.95	NA	> 99.9
Particulate concentration (mg/dscm)	< 180	NA	< 180
PCB DRE (%)	> 99.9999	NA	> 99.9999
Pollution Control			
Scrubber water flow (gpm)	100	> 85	NA
Scrubber water (pH)	8.5	8.0-10.0	NA
Venturi water flow (gpm)	75	60-100	NA
Venturi pressure drop (in. H_2O)	25	> 20	NA

[a]NA (not applicable)

- The sampling or monitoring design for each unit. This may require a mathematical sampling design or simply a reference to a standard protocol (e.g., EPA Reference Method 3, 40 CFR 60--Appendix A). The frequency (e.g., every 15 min), size (e.g., 10 m^3), timing (e.g., any time after reaching steady-state), number of replicates (e.g., 10% of the samples or 2 samples, whichever is greater, collected in triplicate), number of surrogate-spiked samples, and total number of samples should be listed for each sample type. The sample size is usually dictated either by the amount of sample required to detect the analyte or by convenience (e.g., 1 liter for water).

- An estimate of sample representativeness. This may be based on data (e.g., historical data on replicates) or scientific/engineering judgment (e.g., a sample from an actively mixed feed tank might be characterized as representative).

- Contingencies for action if samples cannot be collected according to the plan (e.g., alternative sites or times, an entirely new sampling plan, or repeat tests).

The parameters which typically should be included in the sampling/monitoring plan for an incinerator are discussed below.

Paragraph 761.70 states that "monitoring of stack emission products shall be conducted [during a test burn]... for the following parameters: (a) O_2, (b) CO, (c) CO_2, (d) oxides of nitrogen (NO_x), (e) hydrochloric acid (HCl), (f) total chlorinated organics (RCl), (g) PCBs, and (h) total particulate matter [at a minimum]."

Parameters which must be monitored as part of normal operation (hence, also during the demonstration test) include:

- Rate and quantity of waste feed;
- Combustion temperature;
- Oxygen concentration; and
- Combustion efficiency (CO_2 and CO concentration).

In addition to those required by 40 CFR 761.70, and as part of the normal operation, EPA has determined that the following parameters be monitored for certain destruction tests:

- Total PCB content of the waste feed in order to calculate the DRE;
- PCDD and PCDF (tetra- through octachloro homologs, 2,3,7,8-tetrachlorodibenzodioxin, and 2,3,7,8-tetrachlorobidenzofuran) in the stack emissions; and
- PCB, PCDD, and PCDF concentrations (see Table 8) in any solid or liquid wastes generated.

Appropriate operating parameters of the pollution control system also should be monitored and the data recorded during the demonstration test

Table 8. PCDD and PCDF Reporting Format[a]

PCDDs	Concentration[b]	PCDFs	Concentration[b]
2,3,7,8-tetra CDD		2,3,7,8-tetra CDF	
Total tetra CDD		Total tetra CDF	
Total penta CDD		Total penta CDF	
Total hexa CDD		Total hexa CDF	
Total hepta CDD		Total hepta CDF	
Total octa CDD		Total octa CDF	
Total PCDDs		Total PCDFs	

[a]Limit of quantitation must be ≦ 10 ng/m³/congener for air samples and ≦ 1.0 ng/g/congener for solid and liquid wastes.
[b]ng/m³ for air emissions; ng/g for solid and liquid wastes.

(e.g., scrubber water flow rate and pressure drop). The parameters to be monitored should be included in the sampling/monitoring plan.

5.2.7 Section VI - Sampling and Analysis Procedures

Specific details of the sampling and analysis procedures which will be used during the demonstration test must be included in the Demonstration Test Plan. When "standard methods" will be used, they may be referenced and included as an appendix. However, any deviations from standard procedures must be noted. Any modifications to the published procedures or selection from a number of options given in a procedure should be documented. Furthermore, when the standard method allows different procedural variations to be used, the applicant must be specific as to the procedures which will be followed (e.g., for the measurement of O_2 and CO_2 concentrations in the stack gas by EPA Method 3, will multipoint integrated sampling or single point grab sampling be used?).

The discussion of sampling and analysis methods should include:

- Sampling equipment;
- Sampling equipment calibration;
- Sampling procedures;
- Sample recovery, storage, and preservation;
- Sample transport and custody;
- Analytical equipment;
- Reagents;
- Reagents preparation (e.g., XAD resin preparation);
- Calibration standards;
- Calibration procedures; and
- Sample method blanks.

Appendix B to this document provides guidance on sampling and analytical methods.

5.2.8 Section VII - Monitoring Procedures

Specific details of the monitoring procedures to be used during the demonstration test must be included in the Demonstration Test Plan. If these procedures have been completely described in the permit application and have not changed, the permit application may be referenced. The following information must be included:

- Type of instrumentation;
- Manufacturer, model number;
- Sample conditioning system, if applicable;
- Calibration standards; and
- Calibration procedures.

Brief descriptions of some monitoring procedures which typically have been used for PCB destruction systems are presented in Appendix B to this report.

5.2.9 Section VIII - Data Reporting

Present a summary of the data to be obtained during the demonstration test and to be presented in the final test report. Example calculations and reporting units should be presented. Include information for process data, pollution control system operating data, waste feed, effluent waste, product streams, and emissions.

All chemical analytical values must be reported as concentrations, expressed as:

- Percent for O_2 and CO_2;
- Part per million for trace gases in air (e.g., CO);
- Micrograms per cubic meter for organics in air (e.g., PCBs);
- Micrograms per liter for water; and
- Micrograms per gram for nonaqueous liquids or solids.

To calculate destruction efficiency, PCB values in stack gas and waste feed are to be reported as "total PCB" (a sum of all 209 congeners). A breakdown of the total PCB value by homolog or congener may be useful for certain destruction tests. PCB values in product oil, liquid waste, solid waste, and other streams must be reported in micrograms per gram (µg/g) per resolvable chromatographic peak. The analytical results may not be reported in terms of Aroclor (or other mixture) concentrations, even if an Aroclor is used to calibrate the instrument (as in the waste feed) unless EPA gives prior approval.

PCDDs and PCDFs are to be reported by homolog (i.e., total octachlorodibenzofurans, etc.) for the tetra- through octachloro homologs and summed to give total PCDD and PCDF values as a minimum. Separate values should be reported for 2,3,7,8-TCDD and 2,3,7,8-TCDF (see Table 8, p. 38).

Any other compounds detected should be reported as quantitated, but only if the sampling and analytical methods are valid for the subject compound.

5.2.10 Section IX - Miscellaneous Tests

The proper operation of the automatic waste-feed cut-off and other emergency systems must be demonstrated. Describe the procedures to be used during the demonstration test to check operation of alarm and emergency systems, including:

- Waste feed cut-off system;
- Alarm systems (e.g., high temperature); and
- Fire extinguisher system.

These tests must be included on the schedule (see below). They may be conducted at the conclusion of testing to minimize downtime in PCB processing.

5.2.11 Section X - Test Schedule

Provide a detailed schedule of the proposed demonstration test period. The schedule should be of sufficient detail to determine what activities are planned for each day. Table 9 is an example demonstration test schedule. The schedule should be realistic in the sense of including sufficient time to address problems which can be expected to occur in operating a new process.

5.2.12 Section XI--Quality Assurance Plan

Each Demonstration Test Plan must include a Quality Assurance Project Plan. If an adequate Quality Assurance Project Plan has been submitted with the permit application, then only addenda to the QA plan specific to additional sampling, monitoring, and analysis for the test demonstration, need be submitted with the Test Demonstration Plan. Those portions of the QA plan which apply to normal operations and those which apply only to the demonstration test must be clearly identified. In any event, the QA plan, with addenda, must address all measurement parameters (e.g., CO emissions, combustion chamber temperature), not merely PCB sampling and analysis.

The QA plan must conform to the specifications established in "Interim Guideline and Specifications for Preparing Quality Assurance Project Plans" (USEPA, 1980). A QA plan prepared according to these specifications will address the following items:

- Organization and responsibility for QA;
- QA objectives for each measurement parameter (precision, accuracy, completeness, representativeness, and compatibility);
- Sampling and monitoring procedures;
- Sample custody;
- Calibration procedures and frequency;
- Analytical procedures;
- Data reduction, validation, and reporting;
- Internal quality control checks and frequency;
- Performance and system audits and frequency
- Preventive maintenance procedures and schedules
- Specific routine procedures to assess data precision, accuracy, and completeness;
- Corrective action; and
- QA reports to management.

Additional guidance in the preparation of QA project plans is available in "Quality Assurance Program Plan for the Office of Toxic Substances" (USEPA 1983b).

For most sampling and analysis plans, a minimum of 10% or 2, whichever is greater, of the samples must be collected in triplicate; a minimum of 10% or 2 of the samples, whichever is greater, must be QC controls; and a minimum of 10% or 2 of the samples, whichever is greater, must be QC blanks.

Table 9. Example: Proposed Schedule for Trial Burn

Day	Tentative date		Activity
-5	xx/yy/zz	AM	• Inventory waste feed
		AM/PM	• Begin system shakedown using auxiliary fuel
-4		AM/PM	• Continue system shakedown
		AM/PM	• Calibrate continuous emission monitoring system
-3		AM/PM	• Continue system shakedown
		PM	• Check emergency alarm/cut-off systems
-2		AM/PM	• Continue system shakedown
-1		AM/PM	• Continue system shakedown
0		AM/PM	• Continue system shakedown[a]
		AM	• Test crew arrives on site
		PM	• Test equipment set-up
1		AM	• Begin PCB destruction
		PM	• Emission test No. 1[b]
2		AM/PM	• Emission test No. 2[b]
3		AM/PM	• Emission test No. 3[b]
			• Shut unit down at completion of test according to closure plan

[a]System shakedown should continue until system is able to operate without significant downtime (e.g., a minimum 24 h of operating time without significant downtime is recommended).
[b]Unit will be returned to auxiliary feed at end of each emission test; unit will be switched to PCB waste in early AM.

5.2.13 Section XII - Standard Operating Procedures

Provide any addenda to the Standard Operating Procedures submitted with the permit application, if necessary.

6.0 CONDUCTING AND MONITORING A DEMONSTRATION TEST

Once the Agency has determined that the Demonstration Test Plan is complete, a demonstration will be scheduled at a date agreeable to both the applicant and the agency. Before the demonstration can commence, the Agency will issue an approval for a demonstration, i.e., a demonstration permit. The approval will contain certain conditions, including advance 30-day notification of the demonstration to other appropriate authorities (i.e., Regional Administrator, state and local offices), PCB-containing material(s) to be treated, sampling, analysis, waste disposal, QA, site security, recordkeeping, and reporting requirements. A copy of the demonstration permit must be on site and adhered to during the demonstration.

If any modifications to the test plan are required prior to the demonstration test, the Agency (permit writer) should be notified in writing within 14 days prior to the test. Also, if events require that the plan be significantly modified during the test demonstration, then the permit writer should be contacted immediately to discuss the implications of any modifications. As with normal operation, any significant deviations from or alterations in the standard operating procedure must be documented in writing to the Agency (permit writer) within 10 days of the event. Throughout the test demonstration, an "event log" should be maintained. This log should be submitted as part of the demonstration test report.

Provided that other local, state, and federal regulations allow it, one or more pre-tests may be conducted using a non-PCB feed to shake down the facility. For example, if permitted, a test of an HCl scrubber on an incinerator could be conducted using a chloroform-containing feed to simulate the HCl produced by the burning of PCBs. Furthermore, an R&D permit may be advisable to allow the applicant to test the facility with PCBs in the field prior to a full scale process demonstration (see Section 4.1). EPA encourages applicants to thoroughly shake down their processes before the demonstration tests. The EPA may approve shakedown on a limited quantity of PCBs under an R&D permit.

Prior to the test, the facility must be prepared. All instruments, controls, devices, etc., must be in working order and calibrated. Sufficient supplies of PCB waste, fuel, reagents, etc., must be on hand. The facility should be cleaned (remove all waste, purge scrubbers, etc.) to prevent contamination from previous tests or other use.

The test should be conducted under conditions simulating normal commercial operations. Permit requirements usually reflect the systems' operating conditions during the demonstration test, and conditions used in the tests become conditions allowed in the permit. Therefore, the applicant should give very careful consideration to the design and conduct of the demonstration test. Each demonstration usually consists of the following three steps:

6.1 Start-up

The incinerator is brought up to steady state with no PCBs in the system. As soon as steady-state conditions are reached during the start-up phase of the test, conditions should be noted and samples collected to characterize background conditions. When the monitoring equipment is ready for

collecting the next set of samples, the PCB waste should be introduced into the incinerator.

6.2 PCB Waste Destruction

The PCB waste is introduced into the incinerator at expected normal feed rates and expected maximum PCB concentrations. During the test, samples should be collected and records kept of the readings of the continuous monitors. Visual observation of the effluent should also be made, where appropriate. The test should only be as long as necessary to collect samples for analysis. A 3- to 4-hr emission test is normal for incinerators; three test runs are normally conducted on successive days.

For stack emission testing, the probe should usually be inserted into the stack about 30 min after starting the PCB waste feed. This allows sufficient time for volatilization and destruction of PCBs in the combustion chamber(s) and for sampling of representative combustion gas emissions during PCB incineration.

6.3 Shutdown

Waste feed is terminated and the incinerator is then shut down per normal procedures or kept running on non-PCB fuel at the discretion of the operator.

7.0 DEMONSTRATION TEST REPORT

After the demonstration test has been performed, a report of the results must be prepared and submitted to the DD/EED. The format and the required contents of the test report are presented in this section.

7.1 Format and Contents

Table 10 presents the format for the demonstration test report. The following paragraphs briefly describe the report contents. The test report must contain all of the required information as described in this document.

7.1.1 Demonstration Test Report Cover

Figure 7 is the specified format for the report cover.

If the report or the appendices must be bound separately, number each part of the submission in order (Volume m of n). The covers of each volume should have the full cover information as described above.

7.1.2 Certification Letter

This letter, signed by an authorized official, must certify on behalf of the applicant that the test was carried out in accordance with the approved test plan and the results of all determinations are submitted in the report.

7.1.3 Section I - Summary

The report should begin with a short summary. The summary contains table(s) summarizing the pertinent test results. Table 11 is an example summary table for an incinerator demonstration test. A brief narrative should summarize whether or not the facility met all performance requirements. Major problems encountered and major deviations from the test plan should be mentioned.

7.1.4 Section II - Process Operation

7.1.4.1 General

Provide a general overview of the process using simplified flow diagrams and a brief narrative. Detailed information on the process should be in the permit application and may be referenced.

7.1.4.2 Operation During the Test

Summarize the operating parameters of the process during the destruction test. Include physical characteristics of the feed, PCB content of the feed, feed rates, total feed quantity, temperatures, pressures, effluent stream flow rates and volumes, pollution control system operating parameters, and combustion gas composition (CO, CO_2, O_2, excess oxygen). A tabular format with explanatory narrative, as necessary, is preferred. Detailed data such as tables of 15-min temperature readings and the process operator's log should be relegated to an appendix.

Table 10. Format for the Demonstration Test Report

i	Report Cover
ii	Table of Contents
iii	Certification Letter
I.	Summary
II.	Process Operation
III.	Sampling and Monitoring Procedures
IV.	Analytical Procedures
V.	Test Results
VI.	QA Summary
VII.	Visits and Audits
VIII.	Closure
IX.	Waste Disposal Manifests
	Appendices

Volume m of n

DEMONSTRATION TEST REPORT

PCB DESTRUCTION UNIT
[Type and location]
[Test site for mobile units]
Test dates : _____
Submission date: _____

Submission number [in sequence with permit application and test plan submissions]

Submitted by:

[Company name and address]
[Principal manager and phone no.]

Submitted to:

Division Director, Exposure Evaluation Division
c/o Document Control Officer (TS-790)
Office of Toxic Substances
U.S. Environmental Protection Agency
Room E-201
401 M Street, S.W.
Washington, DC 20460

Figure 7. Demonstration Test Report cover.

Table 11. Example Demonstration Test Results Summary

	Test 1	Test 2	Test 3
Date	_____	_____	_____
Time test begun	_____	_____	_____
Time test ended	_____	_____	_____
Operating parameters:			
Waste feed rate (kg/h)	_____	_____	_____
PCB concentration (g/kg)	_____	_____	_____
PCB feed rate (kg/h)	_____	_____	_____
Auxiliary fuel feed rate (kg/h)	_____	_____	_____
Total thermal load (10^6 BTU/h)	_____	_____	_____
Avg. calculated residence time[a] (sec)	_____	_____	_____
Avg. combustion air flow (acm/min)	_____	_____	_____
Avg. oxygen (%)	_____	_____	_____
Avg. carbon dioxide (%)	_____	_____	_____
Avg. carbon monoxide (ppm)	_____	_____	_____
Combustion efficiency (%)	_____	_____	_____
Avg. scrubber water flow (gpm)	_____	_____	_____
Avg. scrubber water (pH)	_____	_____	_____
Avg. venturi water flow (gpm)	_____	_____	_____
Avg. venturi pressure drop (in. H_2O)	_____	_____	_____
	_____	_____	_____
Particulate/HCl emissions:			
Total sample time (min)	_____	_____	_____
Total sample volume (dscm)	_____	_____	_____
Stack gas flow rate (dscm/min)	_____	_____	_____
Particulate concentration (mg/dscm)[b]	_____	_____	_____
Chlorine (g/min)	_____	_____	_____
HCl removal (%)	_____	_____	_____
PCB emissions:			
Total sample time (min)	_____	_____	_____
Total sample volume (dscm)	_____	_____	_____
PCB feed rate (g/min)	_____	_____	_____
PCB output rate (g/min)	_____	_____	_____
PCB DRE (%)	_____	_____	_____
PCDD/PCDF emissions:			
Total sample time (min)	_____	_____	_____
Total sample volume (dscm)	_____	_____	_____
Total PCDD emissions (ng/dscm)	_____	_____	_____
Total PCDF emissions (ng/dscm)	_____	_____	_____

[a]Calculated from stack gas volumetric measurements.
[b]Corrected to 12% CO_2.

7.1.4.3 Deviations from Test Plan

Any events such as upsets, shutdowns, or other deviations from normal operations, along with the corrective actions taken must be described. These deviations should have been previously reported to the permit writer, verbally during the test and as a separate written incident report within 14 days of the incident. These incident reports should be presented in an appendix. This section should summarize the incidents, discuss their effect on the test results, and discuss their effect on the overall ability of the system to routinely operate within permit conditions.

Also describe non-incident-related changes such as site location, amount of PCBs treated, and use of an independent laboratory for analysis. The purpose or reasons for these types of changes should be explained in this section.

7.1.5 Section III - Sampling and Monitoring Procedures

Describe the sampling and monitoring procedures used. Standard procedures may be referenced, but any deviations or modifications from referenced methods must be described. Lengthy method descriptions should be placed in the appendix.

Summarize the type, location, time, volume, and number of samples collected. Any significant deviations from the Demonstration Test Plan must be noted and the potential effects on the results discussed.

Summarize the type, location, and time period of all monitoring. Any significant deviations from the Demonstration Test Plan must be noted and the potential effects on the results discussed.

7.1.6 Section IV - Analytical Procedures

Describe the analytical procedures used for each parameter (e.g., PCBs in water). Standard procedures may be referenced, but any deviations or modifications from referenced methods must be described. Identify deviations from the Demonstration Test Plan. Lengthy descriptions should be placed in an appendix.

7.1.7 Section V - Test Results

Present concise summaries for all pertinent parameters such as:

- Stack emissions (NO_x, HCl, RCl, particulate, PCB, PCDD, PCDF);
- Influent and effluent stream analyses;
- Stack gas monitoring (CO, CO_2, O_2); and
- Performance results (DRE, combustion efficiency).

Discuss the test and QC results and analysis system performance as necessary. All results should be traceable to the original test data. As a minimum, identify how the results were calculated (formulae and data used). Detailed sample calculations should be presented in the appendix and referenced. For

example, for calculation of the DRE, the equation used should be shown or referenced:

$$DRE = \frac{W_{in} - W_{out}}{W_{in}} \times 100$$

The values for W_{in} and W_{out} used in the calculation should be clearly identified (i.e., the table or page number where they appear in the report) along with the calculated result, so that the DRE calculation may be confirmed.

Identify and discuss any anomalies in the system operation, sampling, monitoring, or analyses that may have significant impact on the test results.

Raw data and raw analytical results (e.g., chromatograms, mass measurements) also should be presented in the appendices.

7.1.8 Section VI - Quality Assurance Summary

Summarize the QA results (blanks, replicates, audit results). Identify any serious problems (e.g., unacceptable audit results, failure to calibrate instrumentation) or deviations from QA protocol. A separate QA report must be presented, authored and signed by the QA officer. The QA report should address all the QA objectives, including whether or not precision and accuracy objectives were met, as well as results of quality control samples, performance audit samples, and systems audits.

7.1.9 Section VII - Visits and Audits

This section should contain a list of visitors and auditors and the affiliation, address, and phone number of those who were on site during the demonstration. The list should include all visitors or auditors from state, local, or federal agencies, their contractors, applicant management, QA personnel, and independent consultants. Where possible, the purpose of these visits and any significant results should be summarized. If audit reports, engineering certifications, etc., were issued by any visitors, they should be appended to the demonstration test report.

7.1.10 Section VIII - Closure

The applicant should summarize the facility closure after the demonstration. Any deviations from the closure plan should be discussed. Applicant should provide documentation (copies of manifest) to show that all wastes generated during the process test were properly disposed according to TSCA and RCRA regulations. Applicant should be aware that all the waste generated during the test should be disposed of by incineration and not landfilling, unless compliance with the landfill restrictions can be demonstrated.

7.1.11 Appendices

Supporting information (e.g., detailed procedures, analytical results, sample calculations, QA report) should be presented in the appendices.

Include the chronological demonstration test events log and any incident reports.

7.2 Review

The permit writer will review the report to determine if it contains all necessary elements and if the demonstration has met the objectives of the test.

7.3 Approval

Upon acceptance of the process demonstration test report and a determination that the process operates within all of the pertinent requirements of 40 CFR 761 and the conditions of the demonstration permit, the DD/EED shall issue a final permit to operate commercially. The operating permit will contain certain conditions, including matrices to be treated, maximum PCB concentrations to be treated, waste disposal, site security, recordkeeping, reporting, and closure requirements. A permit will normally be issued for 3 years' operation. A copy of this approval should be on site and adhered to during all operations.

8.0 REFERENCES

Beard, J. H., III, and J. Schaum, "Sampling Methods and Analytical Procedures Manual for PCB Disposal: Interim Report, Revision 0," Office of Solid Waste, U.S. Environmental Protection Agency, Washington, DC (February 10, 1978).

U.S. Environmental Protection Agency, "Polychlorinated Biphenyls (PCBs) Manufacturing, Processing, Distribution in Commerce, and Use Prohibitions," Federal Register, 44, 31514-31568 (May 31, 1979).

U.S. Environmental Protection Agency, "Guidelines and Specifications for Preparing Quality Assurance Project Plans," Office of Monitoring Systems and Quality Assurance, QAMS-005/80, December 27, 1980.

U.S. Environmental Protection Agency, 40 CFR Part 761, "Procedural Amendment of the Approval Authority for PCB Disposal Facilities and Guidance for Obtaining Approval," Federal Register, 48, 13181-13186 (1983a) [has been superseded by USEPA (1985)].

U.S. Environmental Protection Agency, "Quality Assurance Program Plan for the Office of Toxic Substance," Office of Pesticides and Toxic Substances, Washington, D.C., September 30, 1983b.

U.S. Environmental Protection Agency, 1985a, Code of Federal Regulations, Title 40, Part 60 (40 CFR 60) "Standards of Performance for New Stationary Sources, Appendix A -- Reference Methods".

U.S. Environmental Protection Agency, 1985b, Code of Federal Regulations, Title 40, Part 761 (40 CFR 761), "Polychlorinated Biphenyls (PCBs) Manufacturing, Processing, Distribution in Commerce, and Use Prohibitions."

Weller, P. J., J. Andis, and S. Baig, "Preliminary Study Regarding Alternative Definitions of PCB Solid/Liquid Wastes," dated October 1981, Appendix H in R. G. McInnes and R. J. Johnson, "Provision of Technical Assistance to Support Regional Office Implementation of the PCB Regulations--East and West," Draft Project Summary Report by GCA Corporation, New Bedford, MA, and TRW, Inc., Redondo Beach, CA, on EPA Contract No. 68-02-3168, Work Assignment No. 45, and Contract No. 68-02-3174, Work Assignment No. 68, for David C. Sanchez, USEPA, Office of Research and Development, IERL, Research Triangle Park, NC, 1982, 186 pp.

APPENDIX A

CHECKLISTS FOR COMPLETENESS OF SUBMITTAL

APPENDIX A.1

PERMIT APPLICATION CHECKLIST FOR INCINERATORS

	Submitted	To Be Submitted At Later Date[1]	Not Applicable
1. Permit Cover			
2. Summary (Section I)			
3. Project Organization (Section II)			
A. Chart			
B. Text			
4. Waste Description (Section III)			
A. Type			
B. Total Amount/Feed Rate			
C. Physical/Chemical Description			
5. Process Engineering (Section IV)			
A. General Overview			
• Description			
• Flow Diagram			
• Location			
• Site Maps			
B. Waste Feed System			
C. Waste Feed Shut Off System			
D. Destruction System			
E. Pollution Control System			
F. Operating Parameters			
6. Monitoring Plan (Section V)			
A. Parameter List (see attached supplemental checklist)			
B. Monitoring Frequency			
C. Monitoring Plan Design			
D. Methods			
7. Monitoring Procedures (Section VI)			
A. Appropriate Methods			
B. Written Protocols			
C. Apparatus			
D. Data Reduction			
E. Data Storage/Logging			
F. Calibration			
G. Maintenance			

	Submitted	To Be Submitted At Later Date[1]	Not Applicable
8. Data Reporting (Section VII)			
A. Format			
B. Example Calculations			
C. Units			
9. Inspection Procedures (Section VIII)			
A. Waste Feed System			
B. Destruction System			
C. Waste Feed Cut-Off System			
D. Pollution Control System			
E. Alarms			
F. Fire Extinguisher Systems			
10. Spill Prevention Control (Section IX)			
11. Safety Plan (Section X)			
12. Training Plan (Section XI)			
13. Trial Burn Plans (Section XII)			
14. Test Data or Engineering Performance Calculations (Section XIII)			
15. Other Permits or Approvals (Section XIV)			
A. Regional R&D			
B. Regional Full-Scale			
C. RCRA			
D. State or Local			
E. DOT			
16. Schedule (Section XV)			
17. QA Plan (Section XVI)			
A. Format			
B. Organization and Responsibility			
C. QA Objectives			
1. Precision			
2. Accuracy			
3. Completeness			
4. Representativeness			
5. Comparability			

	Submitted	To Be Submitted At Later Date[1]	Not Applicable
D. Monitoring Procedures	_____	_____	_____
E. Calibration Procedures and Frequency	_____	_____	_____
F. Data Reduction, Validation and Reporting	_____	_____	_____
G. Internal Quality Control Checks	_____	_____	_____
H. Audits			
1. Performance	_____	_____	_____
2. System	_____	_____	_____
I. Preventive Maintenance	_____	_____	_____
J. Specific Routine Procedures Used to Assess Data Precision, Accuracy and Completeness	_____	_____	_____
K. Corrective Action	_____	_____	_____
L. Quality Assurance Reports to Management	_____	_____	_____
18. Standard Operating Procedures (Section XVII)	_____	_____	_____
19. Closure Plan (Section XVIII)	_____	_____	_____
A. Site-to-Site	_____	_____	_____
B. Permanent	_____	_____	_____

[1] Section of the permit should be reserved for revised submittal and the deficiency should be noted in the application.

APPENDIX A.2

MONITORING PARAMETER SUPPLEMENT FOR INCINERATORS

	To Be Monitored (Y/N)	Monitoring Frequency	Monitoring Design	Method	Apparatus	Data Reduction/Storage	Calibration	Maintenance	Written Protocol
a. PCBs in Waste Feed	___	___	___	___	___	___	___	___	___
b. Feed Composition	___	___	___	___	___	___	___	___	___
c. Waste Feed Rate	___	___	___	___	___	___	___	___	___
d. O_2	___	___	___	___	___	___	___	___	___
e. CO	___	___	___	___	___	___	___	___	___
f. CO_2	___	___	___	___	___	___	___	___	___
g. NO_x	___	___	___	___	___	___	___	___	___
h. Combustion Efficiency	___	___	___	___	___	___	___	___	___
i. Residence Time	___	___	___	___	___	___	___	___	___
j. Destruction Temperature	___	___	___	___	___	___	___	___	___
k. Other	___	___	___	___	___	___	___	___	___
l. Other	___	___	___	___	___	___	___	___	___
m. Other	___	___	___	___	___	___	___	___	___

APPENDIX A.3

CHECKLIST FOR INCINERATOR DEMONSTRATION TEST PLAN

	Submitted	To Be Submitted At Later Date[1]	Not Applicable
1. Test Plan Cover	_____	_____	_____
2. Summary (Section I)	_____	_____	_____
3. Project Organization (Section II)			
A. Key Personnel Identified	_____	_____	_____
B. Organization Chart	_____	_____	_____
4. Process Engineering Information (Section III; new information from Permit Applications)	_____	_____	_____
5. Process Operation Test Parameters (Section IV)			
A. Operational Plan	_____	_____	_____
B. Process Operating Parameters	_____	_____	_____
C. Anticipated Emission Levels	_____	_____	_____
D. Waste Feed Description/ Quantity	_____	_____	_____
6. Sampling and Monitoring Plan Design (Section V)			
A. Number of Tests	_____	_____	_____
B. Parameters to be Monitored[2]	_____	_____	_____
C. Parameters to be Sampled[2]	_____	_____	_____
D. Sampling/Monitoring Locations	_____	_____	_____
E. Number/Frequency of Samples	_____	_____	_____
F. Sampling Methods	_____	_____	_____
G. Monitoring Methods	_____	_____	_____
H. Analysis Method	_____	_____	_____
7. Sampling/Analysis Procedures[2] (Section VI)			
A. Methods	_____	_____	_____
B. Written Protocol	_____	_____	_____
C. Equipment	_____	_____	_____
D. Calibration	_____	_____	_____

	Submitted	To Be Submitted At Later Date[1]	Not Applicable
8. Monitoring Procedures[2] (Section VII)			
A. Written Protocol	_____	_____	_____
B. Equipment	_____	_____	_____
C. Calibration	_____	_____	_____
9. Data Reporting (Section VIII)			
A. Data to be Reported, Units	_____	_____	_____
B. Example Calculations	_____	_____	_____
10. Miscellaneous Tests (Section IX)			
A. Waste Feed Cut-Off	_____	_____	_____
B. Alarm Systems	_____	_____	_____
C. Fire System	_____	_____	_____
11. Test Schedule (Section X)	_____	_____	_____
12. Addenda to QA Plan (Section XI)	_____	_____	_____
13. Addenda to Standard Operating Procedures (Section XII)	_____	_____	_____

[1] Section of the permit should be reserved for revised submittal and the deficiency should be noted in the application.

[2] See supplemental checklist.

APPENDIX A.4

SAMPLING AND MONITORING PARAMETERS DEMONSTRATION TEST PLAN SUPPLEMENT FOR INCINERATORS

	To Be Sampled (Y/N)	To Be Monitored (Y/N)	Sampling Frequency	Sampling/Monitoring Loc.	Method	Written Protocol	Apparatus/Equipment	Analytical Method	Calibration	Data Reduction	Data Storage	Data Reporting
a. PCBs in Waste Feed	___	___	___	___	___	___	___	___	___	___	___	___
b. Feed Composition	___	___	___	___	___	___	___	___	___	___	___	___
c. Waste Feed Rate	___	___	___	___	___	___	___	___	___	___	___	___
d. O_2	___	___	___	___	___	___	___	___	___	___	___	___
e. CO	___	___	___	___	___	___	___	___	___	___	___	___
f. CO_2	___	___	___	___	___	___	___	___	___	___	___	___
g. NO_x	___	___	___	___	___	___	___	___	___	___	___	___
h. Combustion Efficiency	___	___	___	___	___	___	___	___	___	___	___	___
i. Residence Time	___	___	___	___	___	___	___	___	___	___	___	___
j. Destruction Temperature	___	___	___	___	___	___	___	___	___	___	___	___
k. Excess O_2	___	___	___	___	___	___	___	___	___	___	___	___
l. HCl Removal Efficiency	___	___	___	___	___	___	___	___	___	___	___	___
m. Stack Gas Flow Rate	___	___	___	___	___	___	___	___	___	___	___	___
n. PCB Feed Rate	___	___	___	___	___	___	___	___	___	___	___	___
o. PCB Output Rate	___	___	___	___	___	___	___	___	___	___	___	___
p. DRE	___	___	___	___	___	___	___	___	___	___	___	___
q. Particulate	___	___	___	___	___	___	___	___	___	___	___	___
r. RCl (volatile)	___	___	___	___	___	___	___	___	___	___	___	___
s. RCl (semivolatile)	___	___	___	___	___	___	___	___	___	___	___	___
t. PCDDs/PCDFs	___	___	___	___	___	___	___	___	___	___	___	___
u. Semivolatile Organic Screen	___	___	___	___	___	___	___	___	___	___	___	___
v. Pollution Control System Operation	___	___	___	___	___	___	___	___	___	___	___	___
w. Ash Composition	___	___	___	___	___	___	___	___	___	___	___	___
x. Wastewater	___	___	___	___	___	___	___	___	___	___	___	___
y Other	___	___	___	___	___	___	___	___	___	___	___	___

APPENDIX B

MONITORING, SAMPLING, AND ANALYSIS PROCEDURES

1.0 MONITORING METHODS

Monitoring of gaseous components is specifically required by §761.70 for thermal destruction systems. Carbon dioxide (CO_2) must be monitored periodically at intervals of no longer than 15 min. Oxygen and carbon monoxide must be monitored continuously. "Continuously" is not defined by the regulation; OTS recommends an instrumental system which completes a minimum of one cycle of sampling and analyzing at least once every 15 sec and records data at least once every minute.

Information related to continuous emission monitoring systems, in general, can be found in "Continuous Air Pollution Source Monitoring Systems" (USEPA 1979).

2.0 SAMPLING PLANS

Sampling plans are often slighted in the rush to get a test underway. Poor planning of the sampling can ruin an otherwise acceptable test and is often the weakest portion of an application. The applicant and permit reviewer must work together to develop a detailed sampling plan which will produce the desired information. In some cases, a "typical" sample may be desired, while in others a "worst case" sample may be desired. The objective must be clearly spelled out.

PCB destruction facilities are, unfortunately, not ideal sampling sites. Events do not always occur according to plan, especially during the shake-down periods in which the destruction test is generally held. The sampling plan must reflect the realities of the destruction unit and make every attempt to meet the stated objectives. In cases where a sampling plan is compromised, the demonstration test report should present an explanation.

Several examples of approaches (not full sampling plans) to sampling situations are presented below.

1. Stack testing generally is conducted over the duration of a test burn (e.g., 4 h). In the EPA Method 5 protocol, the probe is traversed across the stack in a prescribed, nonrandom manner to get a sample representative of all of the stack gases.

2. The waste feed must be sampled from a pipe throughout a test burn. Ideally, a pump would be used to continuously draw off a portion of the feed to obtain an integrated sample. If use of a pump is impractical because of the valve design or feed stock viscosity, manual integration may be an alternative. At measured time intervals (e.g., every 15 min) the valve is opened and a measured amount added to the sample. Thus, over the burn, a sample is collected, which is an integration of the feed at 15-min intervals.

3. An ash bin would ideally be sampled in a random fashion, where every part of the bin has a finite, known probability of being sampled. However, access ports are not randomly placed. A plan may specify that the sampling be randomized within the access area available (perhaps similar to the feed sampling).

4. A field of waste drums is to be sampled. The drums could be randomly sampled. If the drums are known to be from several sources and are identifiable, the sampling design should include stratification of the subsets.

5. The plan stipulates that if a bung on a drum is frozen, the sampler is to move to the nearest drum to the north. If more than half of the bungs are frozen or if the bungs on an apparent set of drums (in one area or with similar markings) are all frozen, the representativeness of the sampling may be compromised (these may all contain a corrosive liquid which has frozen the drums shut) and additional efforts at opening the drums should be employed. These would include freeing the frozen bungs or cutting a new hole in the drum.

3.0 EXAMPLES OF SAMPLE COLLECTION TECHNIQUES

Additional guidance on sample collection techniques is available in "Samplers and Sampling Procedures for Hazardous Waste Streams" (USEPA 1980) and in "Sampling and Analysis Methods for Hazardous Waste Combustion" (USEPA 1983).

3.1 Liquids

Liquids may be collected by grab or integrative techniques. Grab sampling may include filling a jar from a spigot or dipper collection of water from a lagoon. Frequency of sampling and amount to be collected during each test must be stated in the sampling plan and recorded when the samples are collected. Integrative sampling requires a pump on an interval timer, a slow flow from a valve, manually timed interval sampling, or other device. Additional guidance is available (Berg 1982).

3.2 Solids

Solid sampling techniques vary with the nature of the solid. Free-flowing powders may behave like a liquid, while other solids may require special equipment to remove a portion. The equipment to be used (trowel, auger, grain thief, etc.) and procedures for its use must be adequately described.

3.3 Mixed Phase Samples

Mixed phase samples represent a challenge to the sample collector. In tanks and other static systems, a phase separation during sampling is preferable, provided that the total volume or weight of each phase is measured. Phases collected separately must be analyzed separately. Proportions of each phase in the system (e.g., a holding tank) shall be measured volumetrically. Examples including skimming solids off liquids and drawing off oil and water layers from a tank. Where phase separation is impractical, such as a suspended solid, the whole must be mixed to assure that the sample is representative. In a flowing pipe, collecting a representative sample of a solid/oil/water mixture may be impossible, since the valve position is fixed. In this situation the oil phase would probably contain more PCBs than the water and would represent a maximum (worst case for waste, best case for feed). The representativeness or lack thereof should be noted.

3.4 Particulate Matter in Stack Gas Emissions

EPA Method 5 (40 CFR 60) is used to collect a particulate matter sample.

3.5 Organic Stack Gas Emissions

The modified Method 5 (MM5) train is generally used for sampling organic emissions from PCB destruction systems. The configuration presented by ASME (1984) or Stanley et al. (1982) should be followed unless an alternate configuration is approved by the EPA. The ASME method is still in draft form, but is available from OTS. The stack gas is withdrawn isokinetically using a sample train. PCBs, PCDDs, PCDFs, and similar compounds are trapped on an adsorbent tube. The sampling time and amount of gas to be sampled must be stated. Other sampling methods may be used if demonstrated to be satisfactory for the objectives of the test and approved by the EPA. Note that separate sampling trains are recommended for collecting the particulate and the organic emissions. The reason for recommending separate sampling trains is that PCBs and other semivolatile organics may be lost during drying and desiccation of the probe wash/filter catch, as required in Method 5.

3.6 HCl Stack Gas Emissions

Modified Method 5 is usually used to quantify HCl emissions; caustic solution is used in one or more of the impingers to collect the clorides.

3.7 NO_x Stack Gas Emissions

Nitrogen oxides (NO_x) in stack gases are determined according to EPA Method 7 (40 CFR 60). Alternate methods, such as instrumental analyzers may be used if approved by the EPA.

3.8 RCl

Total chlorinated organics (RCl) must be sampled during the initial destruction test. No specific method was mandated by the Agency in the rules. As a result, many sampling techniques have been used to measure RCl. Strictly speaking, RCl must measure volatile, semivolatile, and nonvolatile compounds since the collection and analysis techniques for these three categories may differ. It appears that the volatile halocarbons (e.g., methyl chloride) constitute most of the RCl. These compounds can be sampled using the volatile organic sampling train (VOST) (Bergman 1984; Hansen 1984). Semivolatile RCl can be determined from the sample collected in the MM5 train. Analysis is by GC/MS, GC/ECD, or GC/HECD (see Appendix C, Section 4.4.2).

4.0 SAMPLE ANALYSIS METHODS

4.1 Methods for PCBS

OTS does not specify analytical methods for PCBs; however, this section presents certain guidelines on methods which OTS has reason to believe

will provide acceptable data. Methods for feed materials, stack gas, ash, and scrubber water are presented. Methods other than those presented here may be proposed by permit applicants, provided that the proposed methods meet the OTS data quality objectives (e.g., analysis for all PCBs in samples with detection limits adequate to meet permit requirements). Analytical methods for PCBs have been reviewed recently (Erickson 1985; Erickson and Stanley 1982; Erickson et al. 1982, 1985a, 1985b). Applicants should review these guidelines and propose complete, specific methods in their test plan. Many methods, including some of those discussed in this section, present one or more options to the analyst. The applicant must state which option is to be used. If selection of options is dependent on samples, or on other factors which cannot be predicted, the selection criteria must be presented in the test plan.

PCBs are a complex set of 209 individual chemical compounds. The commercial mixtures for commonly found in the feed material generally contain from 20 to 80 of these 209 PCB congeners. In most cases for effluent samples, however, it can be anticipated that the PCB pattern will be qualitatively different from that in the feed, unless the PCBs were transmitted through the system without any chemical alteration by the destruction process. For effluent samples, the analytical method must identify and quantitate all of the PCBs present in each sample, not just the Aroclor present in the feed.

4.1.1 Feed Materials

As long as the feed material contains PCBs which qualitatively resemble one of the commercial mixtures, such as the Aroclors, the traditional analytical methods which use Aroclor mixtures for GC calibration are acceptable. These methods are discussed below.

If the PCB composition in the feed material does not resemble a commercial mixture, the samples should be analyzed using the methods recommended for the effluent samples, as discussed below.

4.1.1.1 Oils

The EPA procedure for analysis of PCBs in transformer oils and waste oils (USEPA 1981, Bellar and Lichtenberg 1981) provides a generalized approach with respect to sample preparation and instrumental analysis. Several cleanup techniques are provided as optional approaches in this procedure. For the instrumental analysis, GC with halogen specific, electron capture, or mass spectrometry detectors are all allowed, provided appropriate limits of detection can be achieved. A strong quality control program including control samples, daily quality control check samples, blanks, standard additions, accuracy and precision records, and instrumental and chromatographic performance criteria is required to support all data generated by the method.

The ASTM (1983) procedure for mineral insulating oils utilizes solvent dilution and a Florisil slurry cleanup prior to PGC/ECD determination. The procedure assumes that the composition of the PCBs present in transformer or capacitor oils closely resembles that of the Aroclor standards. It notes that the sensitivity of the ECD is reduced by mineral oil and instructs the analyst to make the amount of oil in the standard and sample equivalent to minimize the effects of the oil interference on the quantitative results.

4.1.1.2 Soils, Sludges, and Solid Wastes

A variety of standard methods are available for these matrices.

Several EPA methods utilize dichloromethane extraction, followed by cleanup and GC determination with different detectors. Soil and other solid wastes may be analyzed by EPA's SW-846 methods (USEPA 1984a). Method 8080 is the packed column GC/ECD method; 8250 is the packed column GC/EIMS method; and 8270 is the capillary column GC/EIMS method. All three methods have a stated limit of detection of 1 μg/g. Some options are presented in these methods and the quantitation procedure is not well-defined for PCBs; therefore, applicants must supply additional details on the planned analysis.

The sludge method EPA 625-S (Haile and Lopez-Avila 1984) gives optional Florisil, silica gel, and GPC cleanups and stipulates electron impact mass spectrometry as the GC detector. Quantitation is by total areas compared to total areas of Aroclor standards.

ASTM Method D3304-74 (ASTM 1981b) utilizes a hexane/water/acetonitrile extraction for soil samples. Several optional cleanups are presented. Samples are analyzed by packed column GC/ECD and quantitated using the total areas of Aroclor standards.

4.1.1.3 Capacitors and Other Solids

No standard methods exist specifically for these matrices. The sample should be physically prepared by shredding or grinding and then extracted with an appropriate solvent (e.g., benzene or hexane), preferably with a Soxhlet apparatus over multiple cycles. Cleanup and analysis can then follow one of the methods given above.

4.1.2 Stack Gas Samples

Stack gas samples collected by modified Method 5 trains (see Section 3.5) are extracted, cleaned up, and analyzed by gas chromatography. The filter and the sorbent cartridge (e.g., XAD-2) are generally extracted together with a nonpolar solvent such as hexane, benzene, toluene, or petroleum ether. The extraction is generally done in a Soxhlet extractor to give prolonged and repeated contact with clean solvent. The ASME (1984) toluene extraction and the EPA (Erickson 1984a) hexane extraction are acceptable examples.

GC/EIMS is recommended for the instrumental determination. An EPA perchlorination GC/ECD method (Haile and Baladi 1977, Beard and Schaum 1978) is inappropriate for these complex samples, since perchlorination of non-PCB molecules (e.g., biphenyl) can lead to artifacts in the analysis. An EPA GC/EIMS method (Erickson 1984a) provides guidance on the GC/EIMS analysis and also provides a detailed quantitation method.

The EPA procedures for PCB spills and incinerators (Beard and Schaum 1978) are part of a manual for PCB disposal, primarily focusing on incineration methods. Although this interim report is badly flawed and incomplete, it has

been widely used as the guidance document by the EPA Regional Administrators for testing incinerators. These methods have never been updated and are currently superseded by other methods. Therefore, OTS does not recommend their use by permit applicants.

The stack gas is sampled using the modified EPA Method 5 technique developed by Haile and Baladi (1977). PCBs are extracted from the sorbent material in a Soxhlet extractor using both pentane and methanol. The GC/MS analysis is taken from a tentative procedure for PCBs in water (Dudenbostel 1978). Samples may be chromatographed on columns packed with 3% Dexsil 300, OV-1, or OV-101 and may be detected using either electron impact or chemical ionization mass spectrometry.

Part of EPA's manual for PCB disposal, the "Tentative Method for Testing of Polychlorinated Biphenyls (PCBs) in Spilled Material" (Attachment A, Beard and Schaum 1978), directs the analyst to air-dry the sample (matrix is not further specified), grind it, and then extract a 100-g subsample in a Soxhlet extractor with hexane-acetone (1:1). The procedure then patches into an unreferenced industrial effluent method, which first specifies a PGC/ECD screen. If necessary, various cleanup techniques are specified. An acetonitrile partition is used to remove fats and oils. A Florisil column cleanup fractionates out some pesticides by eluting with 6%, 15%, and 50% ethyl ether/petroleum ether. Two alternate silica gel microcolumn cleanups are presented, one of which provides for sulfur removal with mercury. As noted for the stack gas samples, above, this old method has never been updated and is not recommended by OTS for use by permit applicants.

4.1.3 Ash

Ash and other solid effluent samples can be analyzed by EPA's SW-846 methods (USEPA 1984a) only if the Aroclor pattern remains intact after the incineration process. Method 8080 is the packed column GC/ECD method; 8250 is the packed column GC/EIMS method; and 8270 is the capillary column GC/EIMS method. All three methods have a stated limit of detection of 1 μg/g. Some options are presented in these methods and the quantitation is not well-defined for PCBs; therefore, applicants must supply additional details on the planned analysis.

ASTM Method D3304-74 (ASTM 1981b) utilizes a hexane/water/acetonitrile extraction for soil samples and may be adapted for use with ash samples. Several optional cleanups are presented. Samples are analyzed by packed column GC/ECD and quantitated using the total areas of Aroclor standards. Applicants must supply details on the planned analysis.

If the Aroclor pattern is significantly altered by the destruction process, or if other PCBs (e.g., partially dechlorinated homologs) are observed in the samples, then the above methods are not appropriate for the analysis. An EPA method for by-product PCBs in commercial products and product wastes (Erickson 1984c) may be used with GC/MS as the instrumental method. This method presents several options, so permit applicants must stipulate which options are to be used.

If the applicant chooses to use GC/ECD as the instrumental method, a mixture of 10 PCB congeners (one each for the various degrees of chlorination) may be used for the calibration. This mixture was determined by the Dry Color Manufacturers Association (DCMA) to give an average ECD response for each homolog (DCMA 1982). No specific published method is available for analysis of ash samples using the DCMA quantitation mixture. Sample preparation (extraction, cleanup, etc.) can be done according to EPA's SW-846 (USEPA 1984a) or the EPA by-product method (Erickson 1984c). Instrumental analysis can be done according to EPA Method 608 (USEPA 1984b). To quantitate the samples, the following protocol (Midwest Research Institute 1985) may be used:

a. Determine the retention windows. Note: This is an arbitrary demarcation and results in misidentification of some congeners as either a higher or lower homolog. However, since the ECD cannot discriminate by homologs, this is the best approach to partitioning the peaks.

(1) Record the retention time for each congener in the standard on a data sheet.

(2) For the mono-, the window extends from the retention time of the standard, which is the first eluting PCB, to the midpoint between the mono- and di- standards. Start the window sufficiently ahead of the standard elution time (e.g., 0.1 min) to allow for retention time drift.

(3) The windows for di- through nona- are the midpoints between the retention times of the standards.

(4) For the deca-, which has only one isomer, the window is the retention time of the standard, allowing appropriate time (e.g., ± 0.1 min) for retention time drift.

b. Calculate a linear regression curve for each homolog. The minimum correlation coefficient (e.g., 0.99) should be specified in the QA Plan. If this required correlation is not obtained, either rerun the standard curve or perform corrective action as given in the QA Plan.

c. Quantitate the samples. Obtain the concentration in micrograms per milliliter of each peak in the sample (as injected on the gas chromatograph) from the regression equations calculated above. For most samples, only peaks equal to or greater than 1 μg/g need be reported. Those peaks much less than this value do not need to be calculated. Where it appears that the peaks will be below the cutoff, calculate the area counts necessary for 2 μg/g and then visually compare these with the sample data. This shortcut can speed up the data reduction process by eliminating unnecessary calculations.

d. Multiply the concentration obtained by the dilution factor and divide by the original sample weight (or volume) to obtain the concentration in μg/g (or μg/mL) of the original sample. Record this value on the data sheet for each peak greater than or equal to 2 μg/g.

e. Automated quantitation routines incorporating the above principles may be substituted.

4.1.4 Aqueous Samples

Scrubber water and other aqueous samples can be analyzed by EPA Method 608 (USEPA 1984b) or 625 (USEPA 1984d) or ASTM method D3534-80 (ASTM 1981a) only if the Aroclor pattern remains intact after the incineration.

If the Aroclor pattern is significantly altered by the destruction process, or if other PCBs (e.g., partially dechlorinated homologs) are observed in the samples, then the above methods are not appropriate for the analysis. An EPA method for by-product PCBs in water (Erickson 1984b) may be used with GC/MS as the instrumental method. This method presents several options, so permit applicants must stipulate which options are to be used.

If the applicant chooses to use GC/ECD as the instrumental method, the DCMA (1982) quantitation discussed above may be used. No specific published method is available for analysis of ash samples using the DCMA quantitation mixture. Sample preparation (extraction, cleanup, etc.) can be done according to EPA Method 608 (USEPA 1984b) or 625 (USEPA 1984d) or the EPA by-product method (Erickson 1984b). Instrumental analysis can be done according to EPA Method 608 (USEPA 1984b). To quantitate the samples, the protocol presented in Section 4.1.3 may be used.

4.2 Methods for PCDDs and PCDFs

Because of their extreme toxicity, PCDDs and PCDFs are of environmental concern even at very low levels. Applicants must be able to detect PCDDs and PCDFs at levels of $\leq$ 10 ng/m^3/congener as given in Table 8. Therefore, analytical methods must not only be extremely sensitive but also generate highly reliable results. For these reasons, only a few instrumental techiques have been accepted for use in PCDD and PCDF analysis. Probably the most common is high resolution gas chromatography/electron impact mass spectrometry (HRGC/EIMS), operated in the selected ion monitoring mode. More advanced techniques are available and may be used for confirmation. These would include HRGC/high resolution EIMS.

The method used must be capable of quantitating total PCDDs, total PCDFs, total TCDD congeners, and total TCDF congeners, in addition to 2,3,7,8-TCDD and 2,3,7,8-TCDF. While a certain identification is not required, any tentative identifications must be quantitated as PCDD or PCDF compounds. Since a false positive could adversely affect the permit approval process, it is advisable to employ the best possible analytical methods.

The method must employ GC/EIMS with GC/high resolution EIMS confirmation. EPA Priority Pollutant Method 613 (USEPA 1984c) describes analysis of 2,3,7,8-tetrachlorodibenzodioxin (2,3,7,8-TCDD) in wastewater. The analysis of all PCDDs and PCDFs in water and solids (e.g., fly ash and the XAD-2 traps from a Method 5 train), have been described (Stanley et al. 1982). Surrogate [e.g., (^{13}C) 2,3,7,8-TCDD and (^{13}C) octachlorodibenzo-p-dioxin] must be added to the resin cartridge before extraction to measure recoveries.

4.3 Total Organic Chlorine (RCl)

4.3.1 Volatile RCl

Volatile total organic chlorine, collected on a VOST train as described above, is analyzed by thermal desorption/GC/EIMS (Bergman 1984; Hansen 1984).

4.3.2 Semivolatile RCl

Semivolatile total organic chlorine (TOCl or RCl) or total organic halide (TOX) has been monitored using a very short column (2.5 cm long) PGC/HECD method (Stanley et al. 1982; Haile et al. 1983; Nulton et al. 1984) or extraction and GC/EIMS method (Beard and Schaum 1978). Both employ a Soxhlet extraction of the XAD-2 resin from the Modified Method 5 train (EPA 1977; Haile and Baladi 1977). It should be noted that these methods do not in fact measure total chlorinated organics, but rather semivolatile, gas chromatographable, chlorinated organics. The GC/HECD TOX measurement was applied to background air particulate, stack gas particulate, and ash samples from a municipal incinerator and a cofired power plant (Haile et al. 1983a, 1983b; Nulton et al. 1984). Values ranged from 0.9 to 46,000 ng/g. In water samples they ranged from 100 to 1,000 ng/L.

Two techniques for total chlorinated organics in water may be adaptable to RCl in stack gas. Both involve concentration of the organic halides on a sorbent trap and reduction to HCl at 950°C. In one system, the HCl gas is detected by electrolytic conductivity (Model 610 Total Organic Halogen Analyzer, O.I. Corporation, College Station, Texas). In the other system, the HCl gas is detected by micro-coulometry (Model DX-20 Total Organic Halide Analyzer, Dohrmann Xertex, Santa Clara, California). Both techniques have the advantage over previously used methods in that volatile, semivolatile, and nonvolatile organic chlorides can be detected. The extraction/GC methods detect only the semivolatile organic chlorides. Neither technique has been validated for use in stack sampling. The instruments have been designed for water analysis applications. No instrumental modifications appear to be necessary for stack gas application.

5.0 REFERENCES

American Society of Mechanical Engineers, "Test Protocol: Sampling for the Determination of Chlorinated Organic Compounds in Stack Emissions" (1984). Unpublished report from Environmental Standards Workshop.

American Society for Testing and Materials. "Standard Method for Polychlorinated Biphenyls (PCBs) in Water, ANSI/ASTM D 3534-80," in Annual Book of ASTM Standards Part 31, Philadelphia, Pennsylvania (1981a), pp. 816-833.

American Society for Testing and Materials. "Standard Method for Analysis of Environmental Materials for Polychlorinated Biphenyls, ANSI/ASTM D 3304-77," in Annual Book of ASTM Standards Part 31, Philadelphia, Pennsylvania (1981b), pp. 877-885.

American Society for Testing and Materials, "Standard Method for Analysis of Polychlorinated Biphenyls in Mineral Insulating Oils by Gas Chromatography," ANSI/ASTM D 4059-83, in Annual Book of ASTM Standards, Part 40, Philadelphia, Pennsylvania (1983), pp. 542-550.

Beard, J. H., III, and J. Schaum, "Sampling Methods and Analytical Procedures Manual for PCB Disposal: Interim Report, Revision 0,". Office of Solid Waste, U.S. Environmental Protection Agency, Washington, D.C. (February 10, 1978).

Bellar, T. A., and J. J. Lichtenberg, "The Determination of Polychlorinated Biphenyls in Transformer Fluid and Waste Oils," prepared for U.S. Environmental Protection Agency, EPA-600/4-81-045 (1981).

Berg, E. L., "Handbook for Sampling and Sample Preservation of Water and Wastewater," U.S. Environmental Protection Agency, Report No. EPA-600/4-82-029 (September 1982), 416 pp.

Bergman, F. J., "Volatile Organic Sampling Train (VOST) Development at MRI," presented at the 4th Annual National Symposium on Recent Advances in Pollutant Monitoring of Ambient Air and Stationary Sources, EMSL, USEPA, Raleigh, North Carolina, May 1984.

Dry Color Manufacturers Association, "An Analytical Procedure for the Determination of Polychlorinated Biphenyls in Dry Phthalocyanine Blue, Phthalocyanine Green, and Diarylide Yellow Pigments," Arlington, Virginia (1982).

Dudenbostel, B. F. "Tentative Method of Test for Polychlorinated Biphenyls in Water," Attachment B in "Sampling Methods and Analytical Procedures Manual for PCB Disposal: Interim Report," J. H. Beard, III, and J. Schaum, Office of Solid Waste, U.S. Environmental Protection Agency, Washington, DC (February 10, 1978).

Erickson, M. D., "Analytical Method: The Analysis of By-Product Chlorinated Biphenyls in Air, Revision 2," U.S. Environmental Protection Agency, Office of Toxic Substances, Washington, D.C., EPA 560/5-85-011 (1984a).

Erickson, M. D., "Analytical Method: The Analysis of By-Product Chlorinated Biphenyls in Water, Revision 2," U.S. Environmental Protection Agency, Office of Toxic Substances, Washington, D.C., EPA 560/5-85-012 (1984b).

Erickson, M. D., "Analytical Method: The Analysis of By-Product Chlorinated Biphenyls in Commercial Products and Product Wastes, Revision 2," U.S. Environmental Protection Agency, Office of Toxic Substances, Washington, DC, EPA 560/5-85-010 (1984c).

Erickson, M. D., "Analytical Chemistry of PCBs," Boston: Butterworth Publishers (1985).

Erickson, M. D., and J. S. Stanley, "Methods of Analysis for By-Product PCBs--Literature Review and Preliminary Recommendations," Interim Report No. 1, Office of Toxic Substances, U.S. Environmental Protection Agency, Washington, D.C., EPA-560/5-82-005, October 1982, 135 pp.

Erickson, M. D., J. S. Stanley, K. Turman, G. Radolovich, K. Bauer, J. Onstot, D. Rose, and M. Wickham, "Analytical Methods for By-Product PCBs--Preliminary Validation and Interim Methods," Interim Report No. 4, Office of Toxic Substances, U.S. Environmental Protection Agency, Washington, D.C., EPA-560/5-82-006 (1982), 243 pp. [NTIS No. PB 83 127696].

Erickson, M. D., J. S. Stanley, J. K. Turman, and G. Radolovich, "Analytical Method: The Analysis of Chlorinated Biphenyls in Liquids and Solids," U.S. Environmental Protection Agency, Office of Toxic Substances, Washington, D.C., EPA-560/5-85-023 (February 1985a).

Erickson, M. D., J. S. Stanley, J. K. Turman, J. E. Going, D. P. Redford, and D. T. Heggem, "Determination of By-Product PCBs in Commercial Products and Wastes by High Resolution GC/EIMS," Environ. Sci. Technol. (submitted) (1985b).

Haile, C. L. and E. Baladi, "Methods for Determining the Total Polychlorinated Biphenyl Emissions from Incineration and Capacitor and Transformer Filling Plants," U.S. Environmental Protection Agency, EPA-600/4-77-048, NTIS No. PB-276 745/7G1 (November 1977), 90 pp.

Haile, C. L., and V. Lopez-Avila, "Development of Analytical Test Procedures for the Measurement of Organic Priority Pollutants--Project Summary," U.S. Environmental Protection Agency, Environmental Monitoring and Support Laboratory, Cincinnati, Ohio, EPA-600/S4-84-001; (Full Report available as NTIS No. PB 84-129 048) (1984).

Haile, C., J. Stanley, R. M. Lucas, D. Melroy, C. Nulton and W. Yauger, Jr., "Comprehensive Assessment of Specific Compounds Present in Combustion Processes. Vol. 1-Pilot Study of Combustion Emissions Variability," Office of Toxic Substance, U.S. Environmental Protection Agency, Washington, D.C., EPA-560/5-83-004 (June 1983a).

Haile, C.L., J. S. Stanley, T. Walker, G. R. Cobb and B. A. Boomer, "Comprehensive Assessment of the Specific Compounds Present in Combustion Processes, Volume 3, National Survey of Organic Emissions from Coal Fired Utility Boiler Plants," Office of Pesticides and Toxic Substances, U.S. Environmental Protection Agency, Washington, D.C., EPA-560/5-83-006 (1983b).

Hansen, E. M., "Protocol for the Collection and Analysis of Volatile POHCs (Principal Organic Hazardous Constituents) Using VOST (Volatile Organic Sampling Train), U.S. Environmental Protection Agency, EPA-600/8-84-007 (1984).

Midwest Research Institute, "Operating Procedure - Analysis of Samples for PCBs by GC/ECD," EPA Contract No. 68-02-3938, MRI Project No. 8501-A6, December 1985.

Nulton, C. P., C. L. Haile and D. P. Redford, "Determination of Total Organic Halogen in Environmental Extracts by Gas Chromatography with Hall Detection," Anal. Chem. 56:598-599 (1984).

Stanley, J., C. Haile, A. Small, and E. Olson, "Sampling and Analysis Procedures for Assessing Organic Emissions from Stationary Combustion Sources for Exposure Evaluation Division Studies. Methods Manual," U.S. Environmental Protection Agency, EPA-560/5-82-014 (1982).

U.S. Environmental Protection Agency, "40 CFR Part 60 - Standards of Performance for New Stationary Sources," Fed. Regist., 42, 41754-41789 (August 18, 1977).

U.S. Environmental Protection Agency, "Continuous Air Pollution Source Monitoring Systems," EPA-625/6-79-005 (June 1979).

U.S. Environmental Protection Agency, "Samplers and Sampling Procedures for Hazardous Waste Streams," Report No. EPA-600/2-80-018 (January 1980).

U.S. Environmental Protection Agency, "The Analysis of Polychlorinated Biphenyls in Transformer Fluid and Waste Oils," Office of Research and Development, Environmental Monitoring and Support Laboratory, Cincinnati, Ohio (February 1981).

U.S. Environmental Protection Agency, "Sampling and Analysis Methods for Hazardous Waste Combustion (First Edition)," prepared by A. D. Little, Inc. (December 1983).

U.S. Environmental Protection Agency, "Test Methods for Evaluating Solid Waste-Physical/Chemical Methods, SW-846, 2nd Edition, Revised," Office of Solid Waste and Emergency Response, Washington, DC (April 1984a).

U.S. Environmental Protection Agency, "Organochlorine Pesticides and PCBs--Method 608," Fed. Regist., 49(209), 89-104 (October 26, 1984b).

U.S. Environmental Protection Agency, "2,3,7,8-Tetrachlorodibenzo-p-dioxin - Method 613," Fed. Regist., 49, 136-141 (October 26, 1984c).

U.S. Environmental Protection Agency, "Base/Neutrals, Acids, and Pesticides--Method 625," Fed. Regist., 49, 153-174 (October 26, 1984d).

APPENDIX C

OTS GUIDANCE ON FREQUENTLY ASKED QUESTIONS

June 1986

PREFACE

This Appendix presents answers to frequently asked questions related to permitting of incinerator facilities. The answers represent OTS guidance, as of June 1986.

Conditions Which May Be Included in Permits

Question 1: Is "blend-down" of PCB fluids authorized?

Answer: Blending and/or spiking is allowed only for the purpose of achieving a particular treatment concentration during process demonstrations. However, during commercial operation no material which exceeds the concentration level demonstrated and authorized bv the permit, may be diluted or blended.

Demonstration Test Protocol

Question 2: Are applicants required to test stack gases, ash (including bottom ash), and scrubber water for PCBs, dioxins and furans during incinerator demonstrations?

Answer: Demonstration tests of incinerators must include sampling of stack gases and ash, including bottom ash, for PCBs, dioxins and furans. EPA reserves the right to request similar testing of scrubber water, if available information and data indicate that such testing is needed.

Question 3: What are the testing requirements for dioxins and furans during process demonstrations?

Answer: For incineration, OTS requires stack testing for chlorinated dibenzodioxins and chlorinated dibenzofurans. The analytical detection limits should be no greater than 10 ng/resolvable isomer peak. Testing should be conducted for individual 2,3,7,8 tetrachloro isomers for both dibenzodioxins (2,3,7,8-TCDD) and dibenzofurans (2,3,7,8-TCDF), total tetrachloro homologs of both dibenzodioxins (TCDD) and dibenzofurans (TCDF) and total chlorinated dibenzodioxins (PCDD) and chlorinated dibenzofurans (PCDF).

Question 4: How many successful test runs are required during an incineration trial burn?

Answer: For thermal treatment processes, a minimum of three 4-hour test runs are required. However, more than three test runs may be required if the operator desires to demonstrate performance under more than one operating condition. For example, the operator may desire to demonstrate compliance under two distinct operating conditions as follows: (a) multiple waste feed systems (e.g., solids and liquids); and (b) liquid waste feed stream only at a higher feed rate than when solids also are fed.

Question 5: What are the minimum requirements for decontaminating an incinerator following a PCB burn?

Answer: As a minimum, the following decontamination steps should be taken: (1) if applicable, the waste feed tank should be flushed with a non-PCB fluid (e.g., diesel fuel) and the flushing liquid incinerated; and (2) the incinerator should burn a volume of non-PCB fluid equivalent to one-half the total volume of the incinerator combustion chamber(s).

Question 6: What PCB standards are recommended for analytical testing?

Answer: The PCB standard chosen depends on the PCB composition in the samples and the purpose of the data.

a. If a waste feed sample is being assayed for initial PCB concentration, and if it consists of an identifiable Aroclor (or other commercial mixture) or combination of Aroclors, the instrument may be calibrated using the appropriate Aroclor or combination of Aroclors. The standard concentrations must be within the working range of the instrument and must bracket the concentration of the sample dilutions.

b. If the sample does not contain a PCB mixture similar to the Aroclors or other commercial mixtures, the applicant must demonstrate that all PCBs are being measured. The stack gas and other effluent samples from an incinerator are in this category. For the stack gas samples, the required limit of detection to demonstrate 99.9999% destruction efficiency depends on the feed concentration.

   The PCB elution window is defined by the retention times on a gas chromatograph between 2-chlorobiphenyl and decachlorobiphenyl. The calibration mixture is generally a solution containing one each of the 10 PCB homologs (i.e., mono-, di-, tri-, ... decachlorobiphenyl; e.g., the "DCMA" solution available from chromatography supply companies).

   As with the Aroclor calibration, the standard concentrations must be within the working range of the instrument and must bracket the concentration of the samples.

   Any peaks within the PCB retention window must be calculated as PCBs unless the analyst can demonstrate through use of blanks, confirmatory techniques, or other methods that the peak(s) in question is not a PCB.

Preparations for a Demonstration

Question 7: Is an R&D program, or some other demonstration of the ability to operate, required prior to scheduling an official test demonstration?

Answer: For previously unpermitted facilities OTS recommends either a preliminary R&D program with PCBs or use of a PCB substitute for shakedown of the unit. An R&D permit will not be issued for more than three total batches. It should be stressed that once the applicant proceeds with a demonstration test, if the demonstration schedule is not adhered to, OTS will reserve the right to rescind the permit while on-site or leave the demonstration before it is completed. Another demonstration cannot be rescheduled for a minimum period of three months.

Question 8: Will applicant preparedness be screened prior to demonstration?

Answer: OTS will work with applicants to ensure that the process is ready prior to the demonstration. This may include evidence of successful operations under similar conditions. For facilities where immediate on-site analyses of product is required as part of the demonstration, successful analysis of QA samples may be required before the demonstration as a method of screening out unprepared applicants.

Test Demonstrations

Question 9: What criteria will be used to make an on-site determination to discontinue a demonstration?

Answer: For incinerators, a maximum of two interruptions will be allowed during a stack sampling run. Additional interruptions automatically invalidate the run's results. Inability to complete an acceptable run on the first day is cause for departure by EPA representatives.

If the demonstration schedule is not adhered to, OTS will reserve the right to rescind the permit while on-site or leave the demonstration before it is completed. Another demonstration cannot be rescheduled for a minimum period of three months.

APPENDIX D

ADDRESSES FOR HEADQUARTERS AND REGIONAL OFFICES

Addresses follow for U.S. EPA Headquarters and Regions. Headquarters will supply the names of Regional PCB Coordinators upon request.

Headquarters
Director of the Office of Toxic Substances (TS-792)
Environmental Protection Agency
401 M Street, S.W.
Washington, D.C. 20460

Region 1
(Connecticut, Maine, Massachusetts,
New Hampshire, Rhode Island, Vermont)

Regional Administrator
Environmental Protection Agency
John F. Kennedy Federal Building
Boston, Massachusetts 02203

Region 2
(New Jersey, New York)

Regional Administrator
Environmental Protection Agency
26 Federal Plaza
New York, New York 10278

Region 3
(Delaware, District of Columbia,
Maryland, Pennsylvania, Virginia,
West Virginia)

Regional Administrator
Environmental Protection Agency
841 Chestnut Street
Philadelphia, Pennsylvania 19107

Region 4
(Alabama, Florida, Georgia, Kentucky,
Mississippi, North Carolina, South
Carolina, Tennessee)

Regional Administrator
Environmental Protection Agency
345 Courtland Street, N.E.
Atlanta, Georgia 30365

Region 5
(Illinois, Indiana, Michigan, Minnesota
Ohio, Wisconsin)

Regional Administrator
Environmental Protection Agency
230 South Dearborn Street
Chicago, Illinois 60604

Region 6
(Arkansas, Louisiana, New Mexico,
Oklahoma, Texas)

Regional Administrator
Environmental Protection Agency
First International Building
1201 Elm Street
Dallas, Texas 75270

Region 7
(Iowa, Kansas, Missouri, Nebraska)

Regional Administrator
Environmental Protection Agency
726 Minnesota Avenue
Kansas City, Kansas 66101

Region 8
(Colorado, Montana, North Dakota,
South Dakota, Utah, Wyoming)

Regional Administrator
Environmental Protection Agency
One Denver Place
999 18th Street, Suite 1300
Denver, Colorado 80202-2413

Region 9
(Arizona, California, Hawaii, Nevada)

Regional Administrator
Environmental Protection Agency
215 Fremont Street
San Francisco, California 94105

Region 10
(Alaska, Idaho, Oregon, Washington)

Regional Administrator
Environmental Protection Agency
1200 6th Avenue
Seattle, Washington 98101

APPENDIX E

ANNOTATED BIBLIOGRAPHY

D. G. Ackerman, L. L. Scinto, P. S. Bakshi, R. G. Delumyea, R. J. Johnson, G. Richard, and A. M. Takata, "Guidelines for the Disposal of PCBs and PCB Items by Thermal Destruction," Report by TRW, Inc., Redondo Beach, CA, to David C. Sanchez, USEPA, IERL, Research Triangle Park, NC, EPA-600/2-81-022, February 1981, 317 pp.

Guidance - Thermal

This report is a resource and guidelines document intended to aid U.S. Environmental Protection Agency Regional Offices in interpreting and applying the PCB Disposal Regulations to thermal destruction of PCBs.

As background material, this document describes fundamental processes of combustion, thermal destruction systems, sampling and analysis methodology, and flame chemistry relative to PCB incineration. Administrative considerations, including public involvement, are discussed. Detailed guidelines on evaluation of Annex I incinerators, high efficiency boilers, and the several stages of the approval process are presented and discussed. [authors' abstract]

D. G. Ackerman, L. L. Scinto, P. S. Bakshi, R. G. Delumyea, R. J. Johnson, G. Richard, A. M. Takata, and E. M. Sworzyn, "Destruction and Disposal of PCBs by Thermal and Non-Thermal Methods," Noyes Data Corporation, Park Ridge, NJ, 1983, 417 pp.

Guidance - Thermal and Non-Thermal

This is a verbatim combination of two EPA reports:

1. Sworzyn and Ackerman (1982) [EPA-600/2-82-069], and
2. Ackerman et al., (1981) [EPA-600/2-81-022].

American Society of Mechanical Engineers, "Test Protocol: Sampling for the Determination of Chlorinated Organic Compounds in Stack Emissions," 1984, 24 pp. Unpublished report from Environmental Standards Workshop.

Sampling Methods

A sampling train using XAD-2 resin as the adsorbent is designed so that only the total amount of each chlorinated organic compound in the stack gases sampled may be determined; that is, sampling to determine the partitioning of the chlorinated organic compounds between the solid and gaseous phases is not attempted. All of the compounds of interest are assumed to be collected by the resin. Since this assumption has not been validated in the presence of HCl, high organic load, and other components present, appropriate quality control steps are recommended until the method has been validated. The sampling method is intended for use with analysis by gas chromatography/mass spectroscopy.

American Society of Mechanical Engineers, "Analytical Protocol: Analytical Procedures to Assay Stack Effluent Samples and Residual Combustion Products for Polychlorinated Dibenzo-p-dioxins (PCDD) and Polychlorinated Dibenzofurans (PCDF)," 1984, 26 pp. Unpublished report from Environmental Standards Workshop.

Analytical Methods

The title methods, which are also applicable to residual combustion products such as bottom and precipitator ash, entail addition of isotopically labeled internal standards to all samples in known quantities, extraction of the sample with appropriate organic solvents, preliminary fractionation and cleanup of the extracts using a sequence of liquid chromatography columns, and analysis of the extract for PCDD and PCDF using gas chromatography/mass spectrometry. Performance criteria are specified which the analytical data must satisfy for quality assurance purposes. The method is designed to indicate the total concentration of each group of isomers, that is, the total of each group of tetra-, penta-, hexa-, hepta-, and octachlorinated diebenzo-p-dioxins and dibenzofurans. However, the method does allow quantitation of 2,3,7,8-tetrachlorodibenzo-p-dioxin (TCDD) and 2,3,7,8-tetrachlorodibenzofuran (TCDF). The method is intended to be applicable for determining PCDD/PCDF in combustion products at the parts-per-trillion to parts-per-million level. [adapted from the introduction]

Anonymous, "Ocean Incineration of Hazardous Waste--Permit Writer's Manual," undated, 226 pp.

Guidance

The incineration of hazardous and other wastes by ocean-going vessels on the high seas (hereafter "ocean incineration') offers an attractive alternative to land-based disposal, provided that adequate environmental and other safeguards are taken. National and international regulations and guidelines for ocean incineration have been developed and are recognized by most major industrialized countries. Both international and United States regulations require a permit for ocean incineration. This Manual summarizes existing administrative procedures of the U.S. Environmental Protection Agency (hereafter "EPA") for issuance of such permits and provides technical guidance for evaluating permit applications and for drafting permits. Such guidance relies heavily on documents developed by EPA for permitting land-based hazardous waste incineration facilities under its RCRA program. [author's introduction]

J. H. Beard, III, and J. Schaum, "Sampling Methods and Analytical Procedures Manual for PCB Disposal: Interim Report," Draft Report by Office of Solid Waste, U.S. Environmental Protection Agency, Washington, DC, February 10, 1978.

Guidance/Sampling/Analytical Methods

This manual is a compendium of sampling methods and analytical procedures which may be referred to and used by the PCB disposal facility owner/operators to assist them with any sampling and analytical testing which may be required under 40 CFR Part 761, Polychlorinated Biphenyls. However, due to the short time period in which this manual was prepared, the U.S. Environmental Protection Agency is issuing this manual as an interim document. (The U.S. EPA believes that a sampling methods and analytical procedures manual has to be available to PCB disposal facility owner/operators at the time the regulation is finally promulgated to successfully implement the site approval process under 40 CFR Part 761, Polychlorinated Biphenyls.) A final version of this manual is expected to be issued, after undergoing further review within the U.S. EPA, by early spring of 1978. [authors' preface]

Department of Health, Education, and Welfare, Public Health Service, Center for Disease Control, National Institute for Occupational Safety and Health, "Criteria for a Recommended Standard...Occupational Exposure to Polychlorinated Biphenyls (PCBs)," September 1977, 224 pp. (available from U.S. Government Printing Office, Washington, DC).

Worker Safety and Health

The National Institute for Occupational Safety and Health (NIOSH) recommends that employee exposure to polychlorinated biphenyls (PCBs) in the workplace be controlled by adherence to the following sections. The standard is designed to protect the health and provide for the safety of employees for up to a 10-hour workday, 40-hour workweek, over a normal working lifetime. The standard is measurable by techniques that are valid, reproducible, and available to industry and governmental agencies. Compliance with the standard should substantially reduce any risk of reproductive or tumorigenic effects of PCBs and prevent other adverse effects of exposure in the workplace. Employees should regard the recommended workplace environmental limit as the upper boundary for exposure and make every effort to keep exposure as low as possible.

Evidence indicates adverse reproductive and tumorigenic effects in experimental animals exposed to certain commercial PCB preparations. Currently available information is not adequate to demonstrate that other commercial PCB preparations do not have these effects. Should sufficent information become available to indicate that the standard offers greater or lesser protection from some chlorobiphenyl isomers or commercial preparations than is needed, it will be considered for revision. [from Recommendations section of report]

R. L. Durfee, G. Contos, F. D. Whitmore, J. D. Barden, E. E. Hackman, III, and R. A. Westin, "PCBs in the United States - Industrial Use and Environmental Distributions," U.S. Environmental Protection Agency, Office of Toxic Substances, Washington, DC, Report No. EPA 560/676-005 [NTIS No. PB-252012], 1976, 488 pp.

Review of Disposal and Destruction Methods

This document presents the current state of knowledge about the production, usage, and distribution of polychlorinated biphenyls (PCBs) in the United States. The information presented is derived from detailed studies on the production and first tier user industries, the past and present generation and disposition of PCB-containing wastes, environmental transport and cumulative loads, potential alternatives to PCBs usage, inadvertent losses to and potential formation in the environment, and current regulatory authorities for PCBs control. These results indicated that, although PCBs content of industrial wastes can be reduced through various approaches (treatment, substitution, etc.), there exists a potentially severe future hazard in the form of large amounts of PCBs currently contained in land disposal sites. Further definition of this and other aspects of the PCBs problem, and determination of ways to minimize the hazard, are recommended. [author's abstract]

Environmental Protection Agency, "40 CFR Part 761, Polychlorinated Biphenyls (PCBs) Manufacturing, Processing, Distribution in Commerce, and Use Prohibitions," Federal Register, 44, 31514-31568, May 31, 1979.

TSCA Rules

This final rule implements provisions of the Toxic Substances Control Act (TSCA) prohibiting the manufacture, processing, distribution in commerce, and use of polychlorinated biphenyls (PCBs). Specifically, this rule:

(1) Prohibits all manufacturing of PCBs after July 2, 1979, unless specifically exempted by the Environmental Protection Agency (EPA);

(2) Prohibits the processing, distribution in commerce, and use of PCBs except in a totally enclosed manner after July 2, 1979;

(3) Authorizes certain processing, distribution in commerce, and use of PCBs in a non-totally enclosed manner (which would otherwise be subject to the prohibition described above);

(4) Prohibits all processing and distribution in commerce of PCBs after July 1, 1979, unless specifically exempted by EPA. [author's summary]

Environmental Protection Agency, "Region V Strategy for Permitting PCB Disposal Sites," Process Evaluation Unit, Technical, Permits and Compliance Section, Waste Management Branch, Waste Management Division, Region V, U.S. Environmental Protection Agency, Chicago, IL, undated, 68 pp.

Guidance

This document describes the permitting experiments by repeating the applicable CRF Sections and providing examples of approval and consent letters. Participant programs (public hearings) procedures and a checklist for evaluating applications are appended.

Environmental Protection Agency, "40 CFR Part 761, Polychlorinated Biphenyls (PCBs) Manufacturing, Processing, Distribution in Commerce and Use Prohibitions; Recodification," Federal Register, 47, 19526-19527, May 6, 1982.

TSCA Rules

This action recodifies 40 CFR Part 761 which deals with polychlorinated biphenyls (PCBs). The recodification provides for a more orderly organization of the material. No substantive changes are involved. [author's summary]

Environmental Protection Agency, "40 CFR Part 761--Polychlorinated Biphenyls (PCBs)--Procedural Amendment of the Approval Authority for PCB Disposal Facilities and Guidance for Obtaining Approval," Federal Register, 48, 13181-13186 (1983).

TSCA Rules

This procedural rule change gives the Assistant Administrator for Pesticides and Toxic Substances (Assistant Administrator) authority to approve certain PCB disposal facilities which have previously been subject to approval by each Regional Administrator. The Assistant Administrator will be the approval authority for facilities which are operated in more than one region. The Regional Administrators will continue to have the authority to approve all unique, site-specific facilities such as landfills, stationary incinerators, and research and development into PCB disposal methods. This amendment does not change any standards for approving PCB disposal activities and should provide better responsiveness to the needs of the public and industry. In addition, EPA is providing supplemental guidance to assist persons applying for approval of PCB disposal technologies that are alternatives to incinerators and high efficiency boilers. [author's summary]

M. D. Erickson, Analytical Chemistry of PCBs, Butterworth Publishers, Stoneham, Massachusetts, 1985, 528 pp.

Sampling and Analytical Methods

The book defines and discusses sampling, extraction, cleanup, determination by chromatographic and nonchromatographic methods, data reduction, and quality assurance as six discrete steps in the analysis of PCBs. The final chapter provides a discussion on collaborative testing. The comprehensive bibliography includes more than 1200 references. Five appendices detail PCB nomenclature, physical properties, compositions of commercial mixtures, mass spectra characteristics, and PGC/ECD chromatograms. The book includes extensive critical reviews of the primary literature.

M. D. Erickson and J. S. Stanley, "Methods of Analysis for By-Product PCBs--Literature Review and Preliminary Recommendations," Report by Midwest Research Institute, Kansas City, MO, to David P. Redford, U.S. Environmental Protection Agency, Office of Toxic Substances, Field Studies Branch, Washington, DC, EPA-560/5-82-005, 1982, 135 pp.

Sampling and Analytical Methods

A review of the literature on polychlorinated biphenyl (PCB) analysis and recommendations for methods to determine by-product PCBs in commercial products and other matrices are presented. This report was prepared to assist EPA in formulating a rule regulating by-product PCBs. The published literature on PCB analysis is critically reviewed. Several hundred references are cited in a bibliography. The review is subdivided into extraction, cleanup, determination, data reduction, confirmation, screening, quality assurance, and by-product analysis sections. The determination section includes TLC, HPLC, GC (PGC and CGC), GC detectors (ECD, FID, HECD, EIMS, and other MS), and nonchromatographic analytical methods (NMR, IR, electrochemistry, NAA, and RIA). Techniques applicable to analysis of commercial products, air, and water for by-product PCBs are discussed. The final section of this report presents a recommended overall primary analytical scheme. [authors' abstract]

M. D. Erickson, J. S. Stanley, G. Radolovich, K. Turman, K. Bauer, J. Onstot, D. Rose, and M. Wickham, "Analytical Methods for By-Product PCBs--Initial Validation and Interim Protocols," Report by Midwest Research Institute, Kansas City, MO, to David P. Redford, U.S. Environmental Protection Agency, Office of Toxic Substances, Field Studies Branch, Washington, DC, EPA-560/5-82-006, 1982, 243 pp.

Sampling and Analytical Methods

This document presents proposed analytical methods for analysis of by-product PCBs in commercial products, product waste streams, wastewaters, and air. The analytical method for commercial products and product waste streams consists of a flexible approach for extraction and cleanup of particular matrices. The ^{13}C-labeled PCB surrogates are added as part of a strong quality

assurance program to determine levels of recovery. The wastewater method is based on EPA Methods 608 and 625 with revisions to include use of the ^{13}C-labeled PCB surrogates. The air method is a revision of a proposed EPA method for the collection and analysis of PCBs in air and flue gas emissions. Capillary or packed column gas chromatography/electron impact ionization mass spectrometry is proposed as the primary instrumental method. Response factors and retention times of 77 PCB congeners relative to tetrachlorobiphenyl-d_6 are presented in addition to statistical analysis to project validity of the data and extrapolation of relative response factors to all 209 possible congeners. Preliminary studies using the ^{13}C-labeled surrogates to validate specific cleanup procedures and to analyze several commercial products and product wastes indicate that the proposed analytical methods are both feasible and practical. [authors' abstract]

L. Fradkin and S. Barisas, "Technologies for Treatment, Reuse, and Disposal of Polychlorinated Biphenyl Wastes," Report by Argonne National Laboratory for U.S. Department of Energy, ANL/EES-TM-168, 1982, 47 pp. (NTIS No. DE82013715).

Review of Disposal and Destruction Methods

Several technologies being developed by private industry and government to meet U.S. Environmental Protection Agency regulations for PCBs were assessed to assist in the selection of the best process for a particular application. Methods evaluated include a sodium naphthalide system, a sodium-amine method, the NaPEG® process, plasma-arc technology, ultraviolet-ozone treatment, catalyzed wet oxidation, hydrothermal dechlorination, light-activated reduction, and EPAC filters as well as the approved methods of land disposal and incineration.

C. L. Haile and E. Baladi, "Methods for Determining the Polychlorinated Biphenyl Emissions from Incineration and Capacitor and Transformer Filling Plants," Report by Midwest Research Institute, Kansas City, MO, to Environmental Monitoring and Support Laboratory, Office of Research and Development, U.S. Environmental Protection Agency, Research Triangle Park, NC, EPA-600/4-77-048, 1977, 90 pp. (NTIS No. PB-276 745/7G1).

Sampling and Analytical Methods

Described are methods to measure the polychlorinated biphenyl (PCB) emissions from the stacks of municipal waste, industrial waste, and sewage sludge incinerators and from capacitor and transformer filling plants. The PCB emissions from the incineration plants are collected by impingement in water and adsorption on Florisil. The samples are extracted with hexane, concentrated through evaporation of the solvent, perchlorinated, and the polychlorinated biphenyl content measured as the decachlorinated isomer using a gas chromatograph equipped with a flame ionization detector. The PCB emissions from the capacitor and transformer filling plants are collected directly on Florisil, extracted with hexane, and quantified against the appropriate Aroclor using a gas chromatograph.

The methods were developed from laboratory studies and field tested at nine incineration plants and two transformer filling plants. [authors' abstract]

J. C. Harris, D. J. Larsen, C. E. Rechsteiner, and K. E. Thrun, "Sampling and Analysis Methods for Hazardous Waste Incineration (First Edition)," Report by Arthur D. Little, Inc., Cambridge, MA, to Larry D. Johnson, Technical Support Staff, U.S. Environmental Protection Agency, IERL, Research Triangle Park, NC, EPA Contract NO. 68-02-3111, Technical Directive No. 124, February 1982, 400 pp.

Guidance - RCRA

As part of the Resource Conservation and Recovery Act, the U.S. Environmental Protection Agency has proposed regulations for the owners/operators of facilities which treat hazardous wastes by incineration to ensure that these incinerators are operated in an environmentally responsible manner. In support of these regulations, this document has been prepared as a reference document which describes the sampling and analysis methodologies appropriate to the measurement of the principal organic hazardous constituents in both influent and effluent streams at these facilities. The sampling and analysis methods for these principal organic hazardous constituents (POHCs) are described in the text. Also included are concise summary sheets for all of the recommended methods, stating the method name and number, the types of samples and specific analytes to which the method applies, a brief description of the method, instrument and operating conditions, and a reference to a more detailed description of the procedure. Technician-level protocols are thus incorporated by reference rather than reproduced in this document. In addition to specific methods for the sampling and analysis activities at these facilities, information concerning general strategies and guidelines for reporting and documentation are discussed.

Appendix A provides basic information (structure, CAS Registry Number, molecular weight, melting point, boiling point, and heat of combustion, when available) for all compounds listed in Appendix VIII of the May 20, 1981, Federal Register. Additional appendices list specific Appendix VIII compounds with the appropriate sampling and analysis methods. Mass spectral analytical ions for compounds analyzed by GC/MS are tabulated in Appendix E. [authors' abstract] [revision of Rechsteiner et al.]

T. J. Hennings, P. A. Painter, L. L. Scinto, and A. M. Takata, "Preliminary Operations Plan and Guidelines for the At-sea Incineration of Liquid PCB Wastes," Report by TRW, Inc., Redondo Beach, California, for the U.S. Environmental Protection Agency, Office of Research and Development, Industrial Environmental Research Laboratory, Research Triangle Park, EPA-600/2-82-068, 1982, 121 pp. (NTIS No. PB83-181834).

Guidance

The report is a preliminary operations plan and guidelines report for the disposal of PCB wastes by at-sea incineration. An inventory of government-owned PCB wastes suitable for at-sea incineration and operating plans and a schedule for an EPA-coordinated disposal project were developed. Of the approximately 1.3 million gal. of government-owned liquid PCB wastes identified, 425,000 gal. were considered to be immediately available for at-sea incineration. The operations plan addresses both land-based and at-sea operations. Land-based operations include waste collection and preparation, transportation to a processing facility, processing of wastes and containers, interim storage of bulk liquids, transportation to a ship loading site on the Gulf of Mexico, and ship loading. Incineration site selection, permit requirements, incineration procedures, and cargo tank decontamination are addressed for at-sea operations. The preliminary schedule for the disposal project shows 10 months from the decision to proceed with the project to completion of disposal operations. [adapted from authors' project summary]

R. G. McInnes, "Technical Assistance in Support of Permitting Activities for the Thermal Destruction of PCBs," USEPA, Office of Research and Development, IERL, Research Triangle Park, NC, EPA 600/2-81-240, 1982, 70 pp. (NTIS No. PB82 231 325).

Guidance - Thermal

This report describes phased efforts to identify, evaluate, and provide technical permitting assistance to utility boiler owners considering thermally destroying PCB-contaminated mineral oil. Identification initially concentrated on identifying ideal PCB destruction sites using size, age, location, and fuel use criteria to evaluate available boilers. This effort then extended to directly contacting USEPA Regional Offices to identify utility boiler owners who had expressed an interest in the PCB disposal program. Regular bimonthly contacts were initiated with the Regional Offices and the status of all regional PCB activities was tracked. This contact produced three potential PCB burn sites operated by: (1) Consolidated Edison of New York, (2) Northeast Utilities, and (3) Pennsylvania Power and Light. Test plans were received from the first two and were reviewed and found acceptable; these facilities, however, subsequently withdrew their involvement with the PCB destruction verification burn program due to local community opposition. The Pennsylvania Power and Light Company site remains under active consideration. By the end of the technical performance period of this work assignment, a candidate site had not been identified or approved for testing. Appendices to this report detail the utility boiler site selection methodology, the status of PCB

activities in EPA Regional Offices as of May 1, 1981, and the test plan evaluations for the Consolidated Edison and Northeast Utilities facilities.

The project also required that state and local governments be provided information needed to aid permitting of a PCB verification burn. Under this phase of the project a PCB "white paper" was prepared which summarized background technical information used in writing the PCB regulation (40 CFR 761). A second paper was prepared summarizing comments delivered at a public meeting entitled "What Should We Be Doing About PCBs?" Both of these papers are provided as appendices to the report. [author's project summary]

R. G. McInnes and R. J. Johnson, "Provision of Technical Assistance to Support Regional Office Implementation of the PCB Regulations--East and West," Draft Project Summary Report by GCA Corporation, New Bedford, MA, and TRW, Inc., Redondo Beach, CA, on EPA Contract No. 68-02-3168, Work Assignment No. 45, and Contract No. 68-02-3174, Work Assignment No. 68, for David C. Sanchez, USEPA, Office of Research and Development, IERL, Research Triangle Park, NC, 1982, 186 pp.

Guidance - Thermal

To assist EPA headquarters, laboratory and regional office personnel with the implementation of the PCB regulations, GCA/Technology Division and TRW, Inc., Environmental Division, were retained. GCA was assigned to provide technical assistance to the Eastern EPA Regions (I-V), and TRW performed the identical function in the West (Regions VI-X). These contracts had a twofold direction: to establish a regular bimonthly liaison with the EPA regional offices and to provide technical and coordinative assistance to these offices on an as-needed basis. The bimonthly contact resulted in a regular bimonthly newsletter which was mailed to the EPA personnel in all 10 regions who are directly involved with the implementation of the PCB regulations. The technical assistance effort produced a series of individual facility evaluations as well as a separate study regarding alternative definitions of PCB solid/ liquid wastes.

This project report documents the work efforts conducted by GCA/Technology Division and TRW Environmental Division in providing technical assistance to support regional office implementation of the PCB regulations. The salient points of the two project tasks are discussed in the body of the report and a copy of the latest bimonthly report and all facility evaluations is included in the appendices. This report covers the period of April 28 to December 15, 1981, and work was completed as of December 31, 1981. [from authors' introduction]

Navy, "PCB Compliance, Assessment, and Spill Control Guide," Naval Energy and Environmental Support Activity, Fort Hueneme, CA, Report No. NEESA-20.2-028A [NTIS No. AD-A121 329/7] August 1982, 105 pp.

Guidance

Polychlorinated biphenyls (PCB) are toxic belonging to the well-known chlorinated hydrocarbon family. Because of their low flammability and high stability, PCBs have been extensively used as coolants and insulators in electrical equipment. However, due to the known environmental and health problems occurring from improper use and handling, the Environmental Protection Agency has promulgated stringent regulatory controls concerning use, storage, transport and disposal of PCBs leading to a total ban on use of PCBs. This guide was designed to assist Navy activities in complying with these complex and intricate regulations. [author's abstract]

C. Rechsteiner, J. C. Harris, K. E. Thrun, D. J. Sorlin, and V. Grady, "Sampling and Analysis Methods for Hazardous Waste Incineration," Draft Report by Arthur D. Little, Inc., Cambridge, MA, to Larry D. Johnson, Process Measurements Branch, U.S. Environmental Protection Agency, IERL, Research Triangle Park, NC, EPA Contract No. 68-02-3111, Technical Directive No. 124, July 1981, 324 pp.

Guidance - RCRA

As part of the Resource Conservation and Recovery Act, the U.S. Environmental Protection Agency has proposed regulations for the owners/operators of facilities which treat hazardous wastes by incineration to ensure that these incinerators are operated in an environmentally responsible manner. In support of these regulations, this document has been prepared as a reference document which describes the sampling and analysis methodologies appropriate to the measurement of the priority organic hazardous constituents in influent and effluent streams at these facilities. In addition to specific methods for the sampling and analysis activities at these facilities, strategic information concerning such activities and guidelines for reporting and documentation are discussed. [authors' summary] [Revised to Harris et al.]

J. Stanley, C. Haile, A. Small, and E. Olson, "Sampling and Analysis Procedures for Assessing Organic Emissions from Stationary Combustion Sources for EED Studies. Methods Manual," Report by Midwest Research Insitute, Kansas City, MO, to Exposure Evaluation Division, Office of Pesticides and Toxic Substances, Washington, DC, EPA-560/5-82-014, 1981, 34 pp.

Sampling and Analytical Methods

The sampling and analysis methods described in this report were specifically designed for use in an ongoing nationwide survey of emissions of organic pollutants from stationary combustion sources. The primary focus of this

survey is on polynuclear aromatic hydrocarbons (PAHs) and polychlorinated aromatic hydrocarbons including polychlorinated biphenyls (PCBs), polychlorinated dibenzo-p-dioxins (PCDDs), and polychlorinated dibenzofurans (PCDFs). To date, these procedures have been used by Midwest Research Institute (MRI) to survey emissions from coal-fired utility boilers, a co-fired (coal + refuse-derived fuel) utility boiler, and a municipal refuse incinerator. This document was prepared by MRI as a guideline for laboratories who may participate in this study, and for other researchers who wish to use these methods. [authors' abstract]

G. Vogel, K. Brooks, I. Frankel, S. Haus, and W. Jacobsen, "Guidance Manual for Evaluating Permit Applications for the Operation of Incinerator Units," Report by The Mitre Corporation, McLean, VA, to U.S. Environmental Protection Agency, Contract No. 68-01-6092, December 31, 1980, 221 pp.

Guidance - RCRA

An EPA or state permit writer is offered guidance for evaluating permit applications submitted by owners or operators of incinerator facilities as required under mandate of the Resource Conservation and Recovery Act of 1976. The subject areas requiring evaluation are identified and information that should be contained in an application to ensure a thorough evaluation is listed. Data typical of current, acceptable incineration practices and examples of computations are offered to assist the permit writer. [authors' abstract]

J. V. Zbozinek, T. J. Chang, J. R. Marsh, P. K. McCormick, and J. E. McCourt, "PCB Disposal Manual," Report by SCS Engineers, Inc., Long Beach, California, for the Electric Power Research Institute, Palo Alto, California, CS-4098, 1985.

Review of Disposal and Destruction Methods

The objective of this report is to present an update of the information presented in FP-1207, Volume 1, published in 1979. There have been significant changes both to the regulations and the technology in the intervening period. This report emphasizes those areas which were subject to the greatest change, as well as new areas that were not considered when the previous volume was published. Among the various areas of PCB disposal which are addressed in this report are PCB materials and their distribution in the utility industry, regulations, thermal destruction technology, land disposal, treatment technologies, disposal capacity and demand, and a PCB management program. It is intended that this manual provide sufficient detail to be useful in utility decision processes, even with the realization that regulations are once again in a state of change, as are the available processes and disposal capacities. [authors' abstract]