WATER POLLUTION CONTROL RESEARCH SERIES ● 17030 FWH 01/72

Filtration of Municipal Waste with a Moving Bed Contactor

ENVIRONMENTAL PROTECTION AGENCY

WATER POLLUTION CONTROL RESEARCH SERIES

The Water Pollution Control Research Series describes the results and progress in the control and abatement of pollution in our Nation's waters. They provide a central source of information on the research, development, and demonstration activities in the water research program of the Environmental Protection Agency, through inhouse research and grants and contracts with Federal, State, and local agencies, research institutions, and industrial organizations.

Inquiries pertaining to Water Pollution Control Research Reports should be directed to the Chief, Publications Branch (Water), Research Information Division, R&M, Environmental Protection Agency, Washington, D.C. 20460.

FILTRATION OF MUNICIPAL WASTE WITH A MOVING BED CONTACTOR

by

F. O. Mixon

Research Triangle Institute
Environmental Studies Center
Research Triangle Park
North Carolina 27709

for the

Office of Research and Monitoring

ENVIRONMENTAL PROTECTION AGENCY

Project #17030 FWH
Contract #14-12-895

January 1972

For sale by the Superintendent of Documents, U.S. Government Printing Office, Washington, D.C., 20402 - Price 60 cents

EPA Review Notice

This report has been reviewed by the Environmental Protection Agency and approved for publication. Approval does not signify that the contents necessarily reflect the views and policies of the Environmental Protection Agency, nor does mention of trade names or commercial products constitute endorsement or recommendation for use.

ABSTRACT

A novel moving bed contactor has been utilized in filtration studies of municipal waste at various stages within a trickling filter plant.

Granular, buoyant filter medium is slurried with process feed and introduced to the bottom of a column equipped with lateral retaining screens and filter medium harvesting machinery, both positioned toward the top of the column. Within the column, filter medium rises by buoyancy and forms a porous plug that traps suspended solids from the feed stream. Filtered liquid is removed from the lateral screen, and soiled filter medium is continuously removed from the column top, washed, and recycled to the column bottom.

The process operates stably and dependably on all feeds tested--raw wastewater, primary clarifier effluent, and trickling filter effluent. Suspended solids removals of 60 to 80 percent can be achieved at column loadings up to 7.5 gal./min/sq ft. Filtration of alum-coagulated feed is less effective than that of untreated feed.

This report was submitted in fulfillment of Project Number 17030 FWH, Contract Number 14-12-895, under the sponsorship of the Office of Research and Monitoring, Environmental Protection Agency.

CONTENTS

Section		Page
I	Conclusions	1
II	Recommendations	3
III	Introduction	5
IV	Design, Construction, and Fabrication	9
V	Experimental Phase	15
VI	Results	23
VII	Related Studies	29
VIII	Discussion and Cost Estimates	35
IX	Acknowledgments	39
X	References	41
XI	Patent Status	43
XII	Appendix	45

FIGURES

		Page
1	Schematic Diagram--Moving Bed Filtration Process	10
2	Column--Detailed Drawing	11
3	Screen Section--Detailed Drawing	12
4	The Filtration Process	17
5	The Scraper and Bead Washer	18
6	Schematic Diagram--Chapel Hill, N. C., Waste Treatment Plant	21
7	Electrophoretic Mobility of Alum-Treated Polystyrene Particles	30
8	Proposed Combined Filtration-Incineration Process	34

TABLES

		Page
1	Performance Summary, Moving Bed Filter--Suspended Solids Removal	24
2	Performance Summary, Moving Bed Filter--COD Removal	25
3	Performance Summary, Moving Bed Filter--TOC Removal	26
4	Itemized Equipment Cost	35
5	MBC Process Operating Costs	37
6	Cost Comparisons	37

SECTION I

CONCLUSIONS

1. The moving bed process is mechanically stable, reliable, and dependable.

2. With expanded polystyrene as the filter medium, pretreatment of the filter medium with alum is necessary in order to get satisfactory removal of suspended solids.

3. Suspended solids removals of from 50 to 80 percent were achieved when processing trickling filter effluent, primary clarifier effluent, and raw wastewater at rates up to about 7 gal./min/sq ft.

4. Polystyrene has a negative surface charge and would be expected to repel negatively-charged particulate matter.

5. Perlite, strengthened with some suitable coating, could be an attractive filter medium.

SECTION II

RECOMMENDATIONS

1. It is recommended that other filter media be evaluated prior to commercial development.

2. Incineration of sludge directly from the media warrants investigation.

3. Utilization of the moving bed unit for ion exchange or carbon treatment should be studied.

4. Large-scale studies of the applicability of the continuous filter as a replacement for more conventional solids removal techniques should be undertaken.

SECTION III

INTRODUCTION

Background

For a number of years the Environmental Studies Center of the Research Triangle Institute has been actively participating in the development and advancement of technology for the desalting of sea water. An important piece of equipment which has been developed in connention with freezing processes for desalting has been the hydraulic piston wash separator. Within the context of freeze desalting the wash separator is utilized to separate ice crystals from the mother brine liquor and to wash the brine from the surface of the ice crystals so separated.

A wash column as normally used for slurry separation is simply a column whose upper section is equipped with lateral screens of such a mesh as to be freely permeable to the passage of liquid but be impermeable to the passage of ice crystals. A mechanical device for harvesting ice crystals is located at the top of the column. In operation ice brine slurry is pumped to the bottom of the column and brine flows up the column and out through the laterally positioned filter screens. The ice crystals are left behind to form a porous plug which ultimately fills the entire column cross section. Once completely formed, the plug is propelled upward by the pressure drop of the brine flow through its interstices but is simultaneously replenished at its lower surface by crystal deposition from the slurry. At the top of the column the plug is harvested with some suitable device, melted, and a portion of the product water is recycled to the top of the emerging plug as wash water. This wash water drains downward through the plug by gravity and joins the brine discharging at the filter screens.

Although wash columns as used in desalination have been primarily for slurry separation, the concept of a moving bed solid-liquid contactor constitutes an important bit of fallout technology from the desalination program which can be of value in other areas, particularly in the areas of waste treatment and water pollution control. To derive maximum benefits from the technology transfer, it is, however, necessary to recognize that the device should be considered in more general terms as a moving bed solid-liquid contactor rather than simply as a slurry separator or as a wash column.

About four years ago the Research Triangle Institute recognized, among other things, the possibility of utilizing the moving bed contactor as a device for removing suspended solids from industrial or municipal waste streams. As utilized for the filtration function, the moving bed contactor operates as follows: Granular filter medium is slurried with the incoming process feed which is then fed to the bottom of the moving bed contactor. Once inside the column, filter medium rises because of both buoyancy and viscous drag to the bottom of the preformed porous plug of filter medium where it is deposited and thus replenishes the porous plug. The water is forced through the plug and is discharged by

gravity at the lateral retaining screens, simultaneously undergoing filtration and forcing the plug slowly upward by both drag and buoyancy effects. At the top of the column the emerging porous plug is harvested with a mechanical scraper that discharges filter medium into an auxiliary tank from which it is washed and recycled to the process.

The moving bed contactor utilized as a filter for suspended solids in waste treatment should compete with, and perhaps replace, the following techniques currently in practice: (1) clarification in which one is forced to depend solely on gravity for the removal of suspended solids; (2) fixed bed filtration which offers the disadvantage of requiring periodic backwashing as well as provisions for handling the process flow during the backwashing operation; (3) microscreening which appears to be limited by practical considerations to the polishing of streams containing relatively small amounts of suspended solids; and (4), moving bed filters of countercurrent or crosscurrent design that depend primarily on mechanical means for propelling the moving bed.

Compared to these techniques, the moving bed contactor used as a filter offers a number of advantages; among them are the following:

(1) Simplicity. The unit and associated equipment are quite simple. The column itself can be constructed of virtually any material capable of containing wastewater at low pressures, and the only mechanical appurtenance required is the overhead scraper assembly. This innate simplicity means, of course, low initial cost and low maintenance.

(2) Applicability. The filter can handle suspended solids concentrations as high as those of raw municipal wastewater and as low as those of secondary effluents. Plugging is alleviated simply by increasing the flow rate of filter medium through the filter column.

(3) Continuity. The fact that the unit operates continuously without interruption for backwashing simplifies both materials handling and process automation.

(4) Stability. The filtration unit has a type of inherent head-loss stability in response to fluctuations in both feed rate and feed solids concentration. For example, should the amount of liquid to be handled suddenly increase, there will be an accompanying tendency for increase in the pressure drop across the porous plug, with the consequent result that the plug will rise more rapidly and thus compensate for the increased flow. Similar behavior should result from an increase in solids concentration in the feed. In this circumstance the tendency toward higher pressure drop would be caused by the permeability drop due to solids deposition within the filter. Again the plug will rise and be replenished more rapidly.

(5) Analogy to graded filter media. The fact that the moving bed of filter medium moves co-currently with the water stream undergoing filtration causes the filtration process to simulate that achieved in fixed-bed batch filtrations with graded media filters. In the moving bed unit, clean filter medium is deposited at the bottom of the moving plug and accumulates increasing solids deposits as it moves upward through the bed. Thus, there exists, in steady operation, a spatial variation in solids deposition ranging from a minimum at the bottom of the plug to a maximum at the top of the plug. The permeability varies in inverse fashion, being lower at the top of the plug and increasing as one proceeds downward. Achieving this behavior is the rationale behind graded-media filters, since to increase production between backwashes, it is desirable to filter first through coarse, high-permeability material. Filtration in this sequence offers the advantage of more efficient removal of suspended solids than does filtration through a medium of uniform porosity (1).

Purpose

The purpose of the work reported herein has been to conduct an experimental evaluation of the moving bed contactor (MBC) adapted as a filter for removing suspended solids from municipal waste streams.

Scope and Program

The project as planned and conducted has involved the construction and debugging of a moving bed contactor of sufficient size to be representative of municipal-scale waste treatment equipment. The solids removal capabilities of the unit were evaluated over the range of flow rates from 2 to 10 gpm per square foot, utilizing as feed to the unit process streams taken from various points within a typical trickling filter municipal waste treatment plant. In particular, the performance of the unit has been studied when filtering trickling filter effluent, primary clarifier effluent, and raw wastewater.

It was originally intended to study solids removal using a single filter medium, i.e., expanded polystyrene. However, for reasons discussed in subsequent sections of the report, it was found necessary to use a mixture of about equal parts by volume of expanded polystyrene along with low density polyethylene blow molding resin.

Within the limitations of project timing and funding, it was also planned to study the filtration of alum-coagulated trickling filter effluent, primary clarifier effluent, and raw sewage.

Provision was made to vary the depth of the filter medium from about 1 to 6 feet.

SECTION IV

DESIGN, CONSTRUCTION, AND FABRICATION

A schematic diagram of the moving bed contactor (MBC) as adapted for the filtration operation is shown in Figure 1. The integrated process can be broken down into the following sections which will be illustrated and described individually: the column, the screens, the scraper section, the bead washing section, the sludge settling section, and the bead recycle section.

The Column

A detailed drawing of the column is shown in Figure 2. The column is 2 feet in diameter with an 8 foot straight section equipped with a 3-inch flanged section at the top and a conical bottom with a 2-inch standard flanged pipe fitting. Translucent fiberglass, manufactured by Justin Enterprises, Fairfield, Ohio, was chosen as the material of construction for the column with the object of providing for visual observation of the bottom of the bed of porous material. The column had liquid-level strips painted at 90-degree intervals around its circumference for easy measurement of the bed depth.

As it turned out in practice, the lower level of the porous plug could be observed through the column only on certain occasions, i.e., after the addition to the bottom of the plug of clean, white filter medium or during rapid motion of the filter medium associated with draining the column. Thus, the fiberglass was only marginally adequate for viewing events within the column. It proved, however, to be quite satisfactory from the standpoint of its corrosion resistance and mechanical strength.

The Screens

A detailed drawing of the screen section is presented in Figure 3. This piece of equipment was custom fabricated for the moving bed contactor by the Wedgewire Corporation of Wellington, Ohio, from their Wedgewire "Kleenslot" screens. The screen section was constructed from Type 403 stainless steel which proved to be entirely adequate for corrosion resistance. Slot spacing was specified at 0.020 inches. For this design the open area of standard Wedgewire screen is such that the hydraulic resistance of the screen is negligible compared to that of the particles retained by the screen. This piece of equipment proved entirely adequate and caused no difficulty at all throughout the duration of the project.

The Scraper Section

The scraper section was fabricated utilizing the screw flights of two 9-inch diameter by 5-feet long screw conveyors. These screw flights were mounted in parallel within a steel shroud designed to fit on top of the column. The two screw flights were connected with No. 40 chain and 6-inch sprockets so as to run simultaneously and at the same speed.

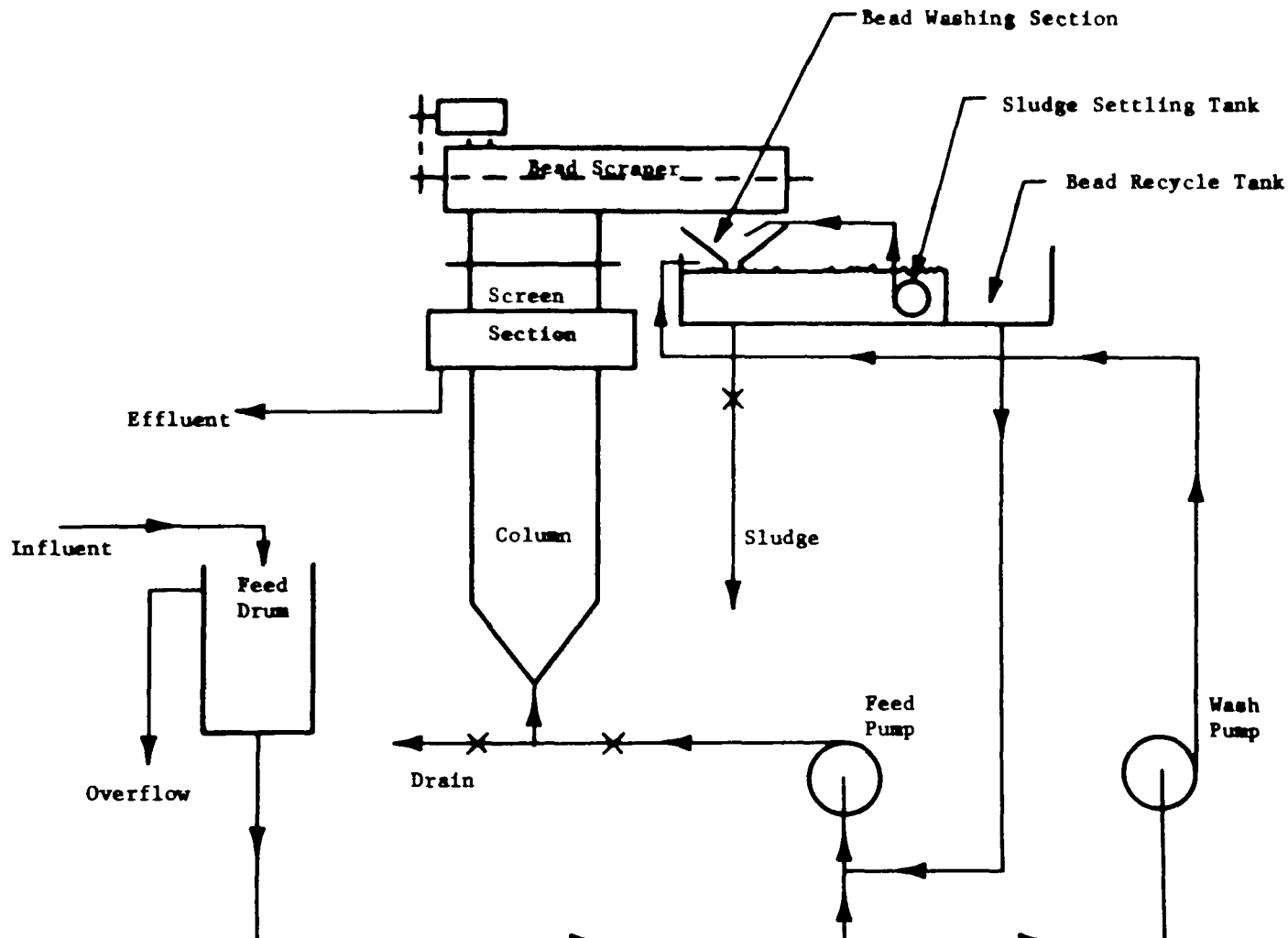

Figure 1. Schematic Diagram--Moving Bed Filtration Process

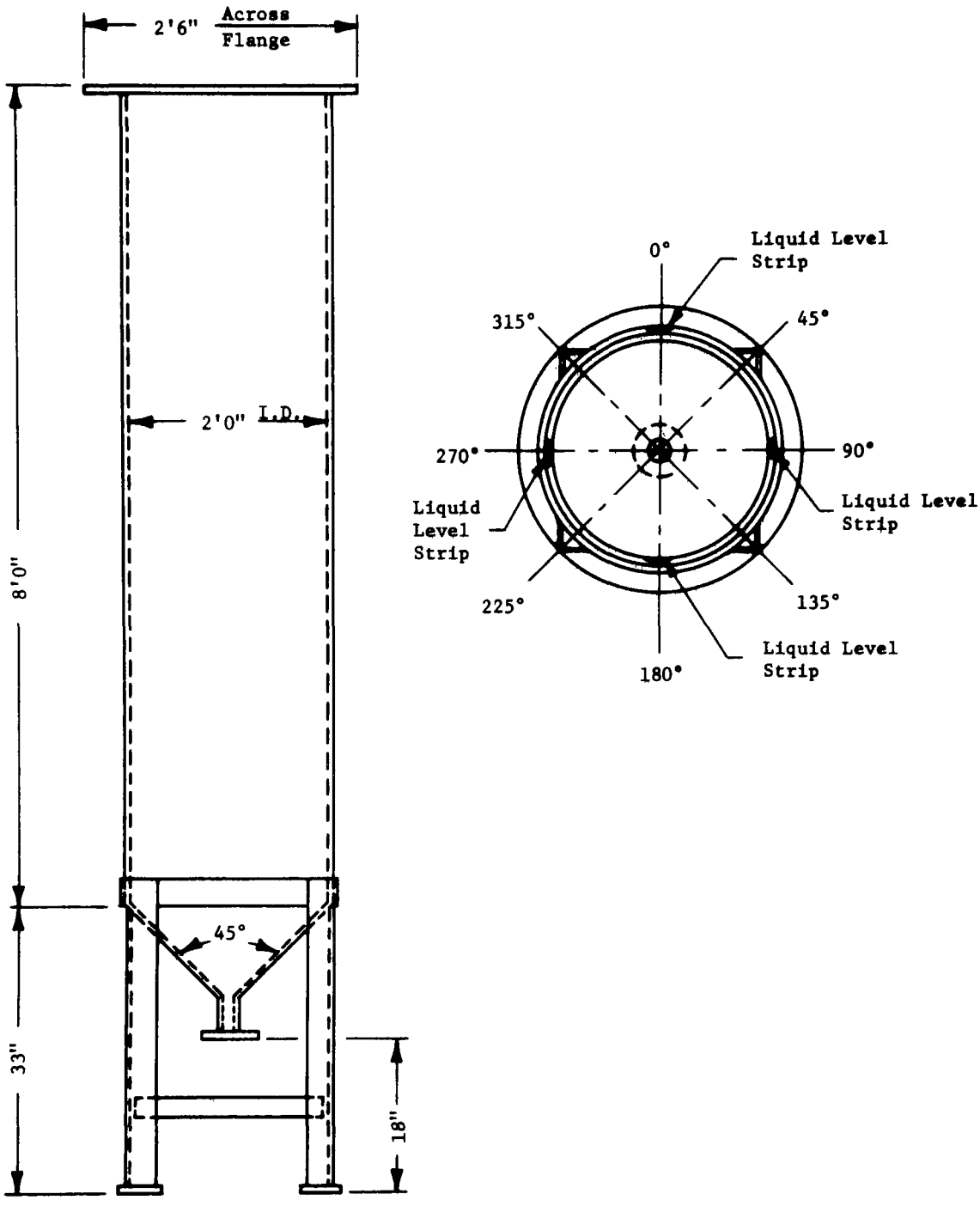

Figure 2. Column--Detailed Drawing

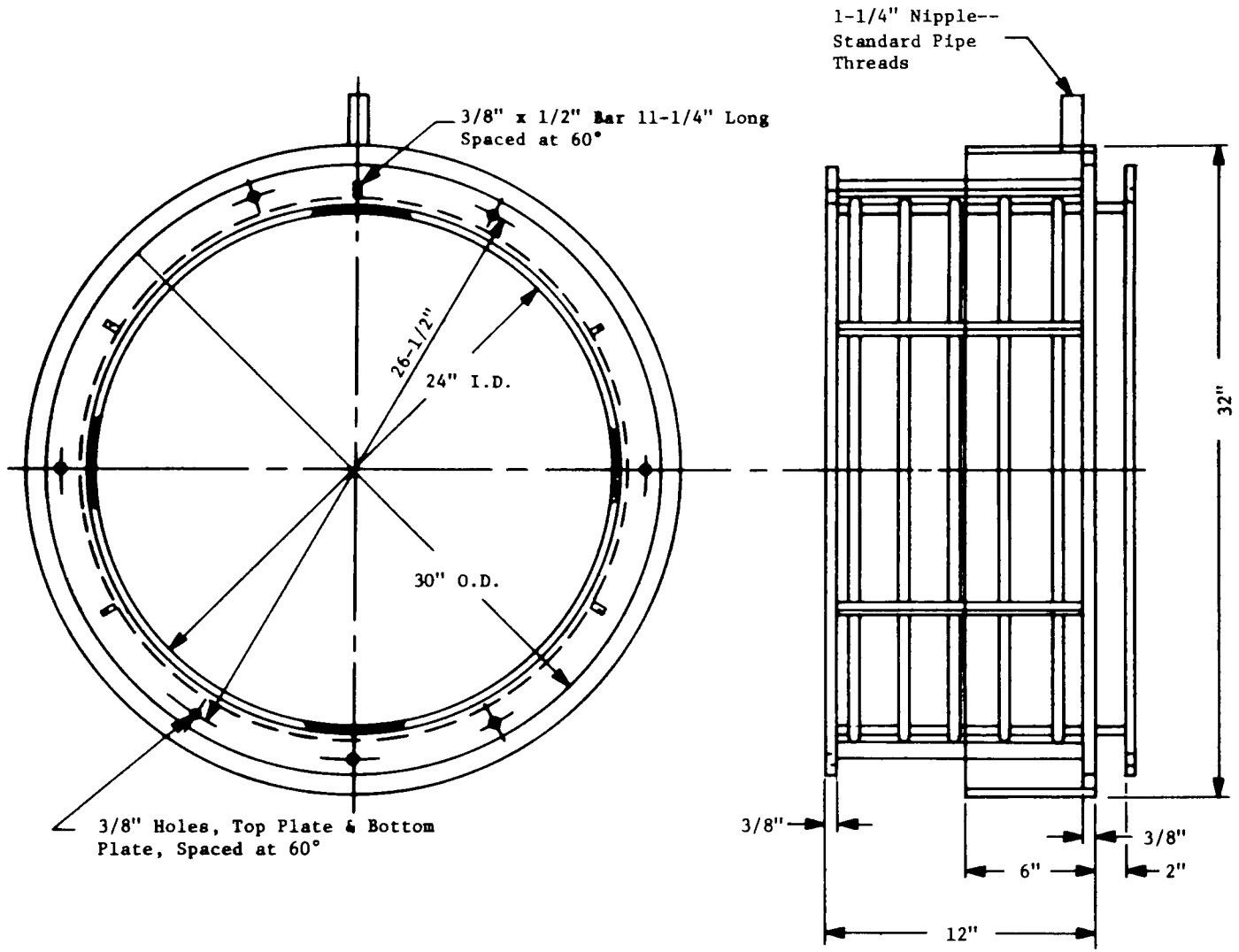

Figure 3. Screen Section--Detailed Drawing

They were driven with a one-quarter horsepower, 6 rpm gear motor arranged to produce a rotational speed of the screw flights of about 2 rpm. This apparatus proved to be satisfactory for removing the solids laden filter medium from the top of the column prior to washing.

The Bead Washing Section

From the scraper section, the filter medium was discharged by gravity into a 2-foot diameter funnel which served as the bead washing section. The underflow of the funnel was directed into a tank used for sludge settling and bead separation. From this tank, the sludge settling tank, liquid was recycled with a small centrifugal pump (about 500 gallons per hour) to the bead washing funnel to serve as wash liquid. This liquid was discharged into the bead washing funnel in a tangential fashion with the washing action being much like that in a dentist's spittoon. Filtered solids were washed from the beads by the liquid turbulence. Throughout the program there was no indication that utilizing dirty water as the bead washing liquid was disadvantageous.

The Sludge Settling Section

From the bead washing funnel the beads, together with the solids-laden wash water, were discharged into the sludge settling tank, a tank 2 feet by 1.5 feet by 3 feet deep having one side cut to serve as an overflow weir maintaining a liquid depth of 2 feet in the tank. The tank was equipped with internal baffles to prevent the turbulence generated by the small centrifugal pump from reaching to the bottom of the tank and to the vicinity of the sludge discharge. During operation sludge would settle to the bottom of the tank and be discharged periodically to waste through a timed solenoid valve, and laundered floating beads would be discharged at the overflow weir for recycling to the column.

As can be seen from the MBC process schematic, Figure 1, two streams flow into the sludge settling tank: beads plus wash water from the bead washing section and a flow coming from the by-pass pump. The purpose of the latter flow is twofold: first, to refill the tank after periodic sludge withdrawal and second, to impinge upon the floating beads and wash them over the weir into the bead recycle tank. This stream was operated continuously at a rate no greater than necessary to perform its function, normally about 3 gpm.

The Bead Recycle Section

The beads being washed over the overflow weir from the sludge settling section were discharged into the bead recycle tank, a tank of dimensions 1 foot by 1.5 feet by 3 feet deep. From this tank the beads were discharged continuously to the suction of the main feed pump supplying influent to the column. The bead-laden discharge of this pump was piped directly to the bottom of the column proper.

Sequence Timing in Normal Operation

The operation of the bead washing and recycling systems was controlled by a set of timing relays designed to produce the following sequence of events:

1. At the beginning of the cycle, open the solenoid valve in the sludge settling tank.

2. At 15 seconds, close the solenoid valve and activate the bead scraper and the centrifugal bead washing pump. The time provided for sludge drainage (15 sec) is sufficient for withdrawal of about 2 gallons of sludge.

3. At 30 seconds, deactivate the bead scraper. At this point in the cycle approximately 1/2 cubic foot of beads have been dropped into the bead washing section and are being gradually cleansed and discharged by the flow from the centrifugal wash pump, which continues to operate for a time.

4. At 2 minutes, deactivate the centrifugal wash pump. At this time in the cycle the recycle flow is washing beads over the outlet weir and the sludge is being allowed to settle in the bottom of the sludge settling tank.

5. At 4 minutes, repeat the cycle, starting with Step 1 above.

SECTION V

EXPERIMENTAL PHASE

Development and Debugging of the Equipment

During the design and construction of the equipment, the usual assortment of difficulties that one normally runs into in an experimental project were encountered. There were numerous leaks to be plugged, and several failures of purchased equipment were experienced. For example, a centrifugal pump proved to be faulty, and a circuit breaker in the main power panel failed. On one occasion an unexpected overnight drop in ambient temperature resulted in freezing and rupture of several plastic pipes.

On several occasions throughout the winter of 1970-1971, moist, solids-laden beads emerging from the water at the screen level in the column froze together during their transit from the screen section to the scraper section. This problem was particularly serious with some of the initial scraper designs that were limited in their ability to recycle beads at a sufficiently rapid rate. In fact, several design modifications of the bead scraping system were attempted before a system was found which proved adequate to transport even partially frozen beads at the required rates.

The bead scraper as originally designed was a circular piece of perforated steel plate with half-inch perforations on 1 inch centers. A spindle was welded to the center of the plate and mounted so that its axis coincided with the axis of the column. In operation the plate was driven with a gear motor at a rate of about 2 rpm. Presumably the beads rising from below would pop through the perforations in the plate and then be directed with a nonrotating baffle into a lateral discharge chute leading from the column to the wash tank. A vapor lift pump was installed to pump wash water from the wash tank into the top of the discharge chute.

The airlift method of pumping was selected at the outset to avoid the plugging of pumps and orifices with sewage-laden beads. This method of transporting wash fluid was soon discovered to be inadequate, and the airlift pump was quickly replaced with a submersible centrifugal pump. Our anticipation of difficulties in pumping bead slurries with the small centrifugal pump proved realistic. Intermittent difficulties were encountered with this particular pump throughout the course of the project.

The rotating-plate bead scraper turned out to be an inadequate design for the handling of wet, solids-laden beads. It simply would not convey enough wet beads to the discharge chute.

To remedy this problem a modified scraper assembly was designed, fabricated, and installed. The new conveyor was a 5 foot section of 9-inch diameter screw conveyor which was mounted on top of the column utilizing an especially constructed adaptor section. The adaptor section was

designed and constructed to give a smooth transition from the 2-foot diameter circular cross-section of the top of the column to the 1 foot by 2 foot rectangular cross-section entrance to the conveyor shroud. This particular arrangement did not function properly because the beads had difficulty moving through the circular to rectangular transition in the adaptor section. Though the screw flights would turn on schedule, they would not pick up and move beads.

The next modification of the scraper section was to remove the adaptor section completely and to mount the conveyor shroud directly atop the column with segmentally-shaped baffle plates covering the open area. This arrangement still seemed to provide too much constriction in the bead path for the beads to be able to move freely from the column into the conveyor.

The next and final arrangement was a double-barreled conveyor. An additional 5-foot section of 9-inch diameter screw flights was procured and was mounted with its axis parallel to the existing conveyor. A new and larger shroud was fabricated which housed both conveyor screw flights and which was large enough to freely admit beads coming from the top of the column. The final configuration for the scraper section is shown in Figures 4 and 5, which are photographs of the equipment taken near the termination of the experimental phase and thus show the arrangement of the equipment as it finally evolved.

In addition to the bead scraping section, it was also necessary to make design modifications to the bead washing section. As originally designed, the beads were discharged into a small chute from the column and were then washed down into the main bead washing tank with the air lift pump. This method of washing was changed when the first scraper arrangement was changed. A subsequent configuration was to let the beads discharge directly from the screw conveyor into the bead washing tank. This arrangement did not provide for efficient washing of the beads. They would drop in bulk from the conveyor to the tank without being cleaned in the process. It appeared that somehow the beads needed to be restrained for more efficient washing between the discharge of the conveyor section and the main bead tank.

To test this idea, a 1 foot by 2 foot by 4-inch deep tank was placed so as to catch the beads being discharged from the conveyor section. Wash water from a submerged centrifugal pump in the main bead washing tank was directed onto the beads in this intermediate tank. It was found that the short holdup of the beads in the intermediate tank, together with the swirling action of the wash water introduced into this tank by the centrifugal pump, provided a washing action better than that heretofore obtained.

The final modification to the bead washing system was to replace the rectangular tank with a circular, funnel-shaped tank functioning in a manner similar to a dental spittoon and providing still more efficient washing action.

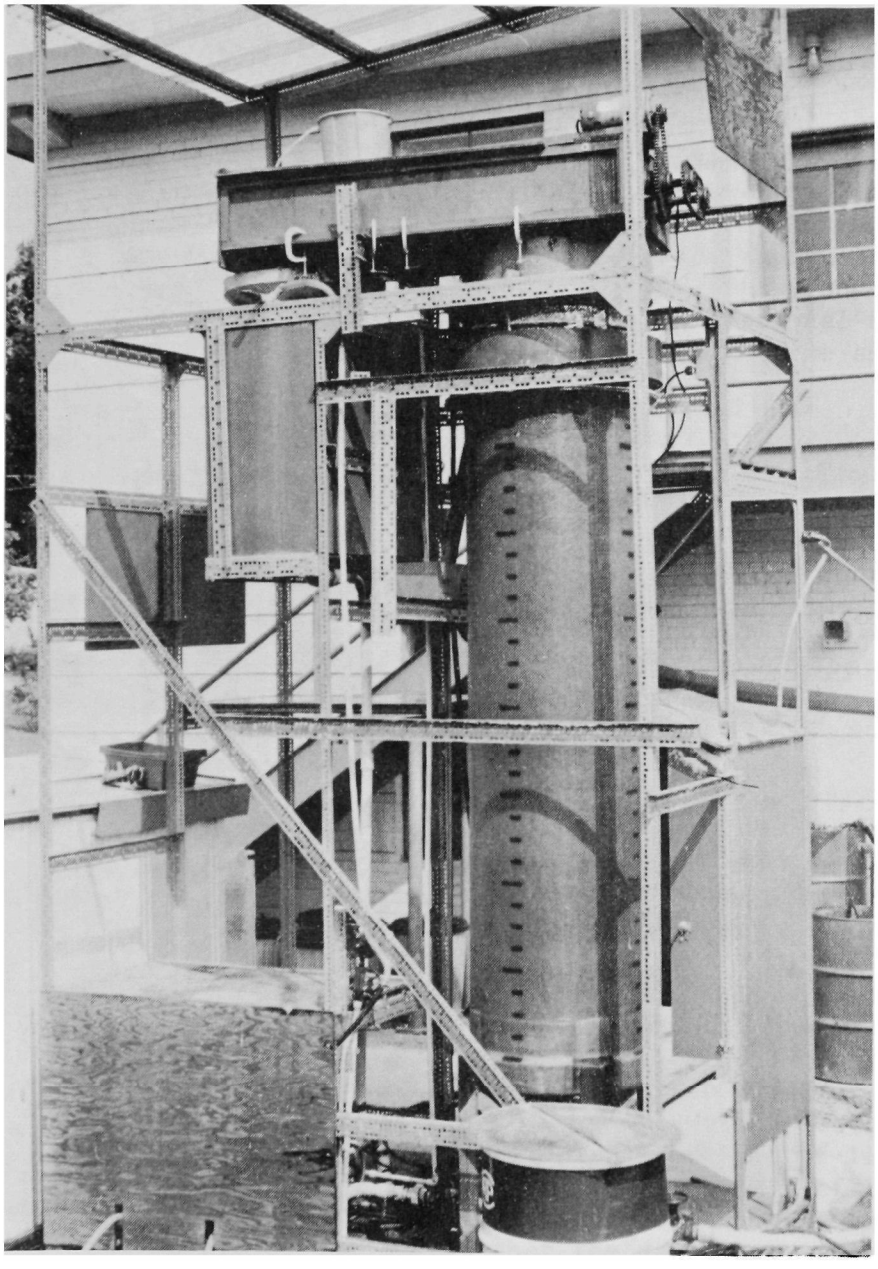

Figure 4. The Filtration Process

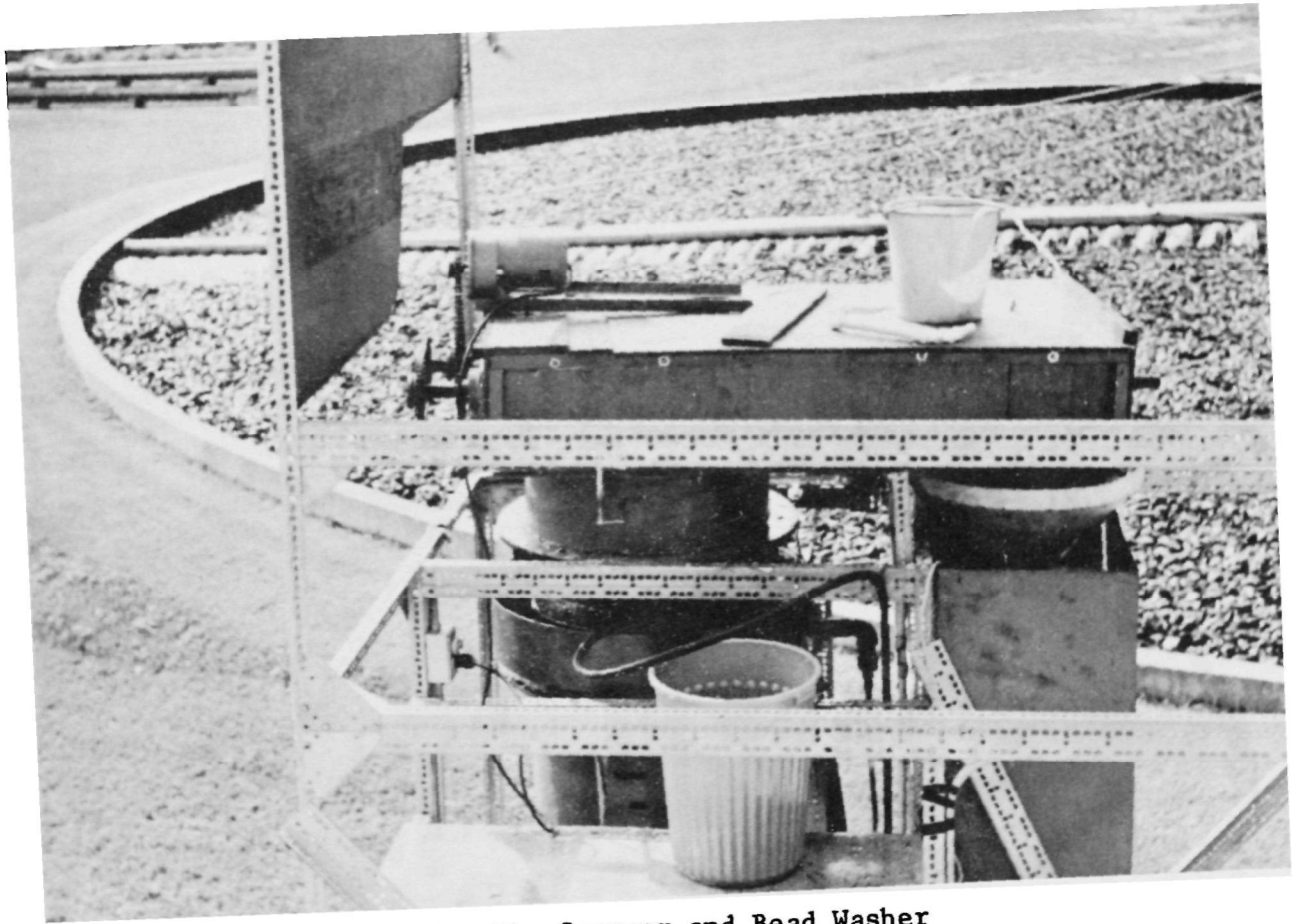

Figure 5. The Scraper and Bead Washer

Period of Successful Operation

During the time of evolution and debugging of the mechanical problems, the filtration performance of the unit was, for reasons to be discussed shortly, somewhat below what one would expect. As a result, the initial phases of the project were concerned not only with ironing out mechanical details but also with attempts to improve the filtration performance. As is often the case, after a preliminary induction period in which everything seemed to go wrong, everything seemed to fall into place, and the unit began to deliver acceptable filtration with good mechanical dependability.

From this time on, the usual procedure was to leave the unit running around the clock and often right through the weekend. Daily samples of influent and effluent were routinely secured and submitted for analysis of total organic carbon, chemical oxygen demand, and suspended solids. At the time of sampling, feed rate, feed temperature, and pressure drop across the bed were noted. On many occasions additional samples were taken for special studies which were undertaken as time and funding permitted.

The overall timing of the experimental work was approximately the following: From the inception of the project, approximately 9 months were required for procurement, construction, and debugging of the equipment, including the modifications previously discussed. Thereafter, about 2-1/2 months were spent investigating the performance of the filter when handling trickling filter effluent. Then about 1/2 month was spent treating primary clarifier effluent. Following this, about 1/2 month was spent processing raw sewage through the moving bed unit. There followed a month in which the unit was not operated at all. The shutdown was caused by a flash flood that completely submerged our pump drivers as well as those associated with the main waste treatment plant. When the plant was again on stream, raw sewage was not available to the moving bed filter because of a pump failure. About 3 weeks were spent collecting additional data on the processing of primary clarifier effluent; thereafter, the balance of the experimental time available, about a month, was spent doing additional studies with raw sewage.

The Chapel Hill Waste Treatment Plant is normally operated with substantial recycling from the final clarifiers to the primary clarifiers. During the period of study of the moving bed filter, the recycle rate, defined as recycle rate divided by feed rate, ranged from about 1.5 to about 4.5 with most of the values exceeding 2. Such recycle ratios are typical of high-rate trickling filter plants but not of low-rate plants (2). With these recycle rates, the primary clarifier effluent is more nearly like trickling filter effluent than would be the case with no recycle. It should be remembered that the data here reported are for a high-rate plant.

Initially in the investigation attempts were made to filter untreated trickling filter effluent utilizing the polystyrene filter media. These efforts proved fruitless. The data indicated that substantially

no solids were being removed during the filtration. The next step was to attempt to filter alum-coagulated trickling filter effluent at column loadings of around 4 to 5 gallons per minute per square foot. Filtration performance when processing alum-treated feed was quite poor. However, we discovered more or less fortuitously that if the alum flow to the column were stopped, filtration performance improved significantly. The conclusion is inescapable that alum treatment modifies the polystyrene beads in some fashion so as to greatly improve their performance as a filter medium. Following discovery and confirmation of this behavior, all subsequent filtration studies were made utilizing alum-treated beads.

The mechanical changes that were necessary to cause the unit to function properly have been discussed in a preceding section. In addition to these changes, it was necessary to make certain modifications to obtain satisfactory filtration performance. It was observed that the polystyrene particles, after having been in service for several months, would, as a result of hydrostatic and hydrodynamic pressures, be deformed from spheres to disc-shaped particles. This squashing of the individual particles was accompanied by reductions both in the total bed volume and in the bed porosity. These changes in the structure of the bed could and did on several occasions lead to malfunctioning of the unit in the sense that the lateral discharge screens became overloaded and the excess liquid overflowed to the top of the column, through the bead scraper, and into the bead washing section. To alleviate this required some means of maintaining the porosity of the bed by inhibiting the bulk deformation of the polystyrene particles. This was done by mixing in with the 0.040-inch diameter polystyrene particles approximately an equal part by volume of a particulate polyethylene blow molding resin with particle size approximating 0.125 inch. The effect of the polyethylene was to provide bed rigidity while, at the same time, permitting the smaller polystyrene particles to accomplish effective filtrations. All but one week's worth of significant data were taken with the mixture of particles. This arrangement seemed to work quite satisfactorily. It was necessary, however, to take steps to prevent the polystyrene particles from entering the suction of the centrifugal bead washing pump. It proved to be quite easy for the rigid polyethylene particles to jam between the impeller and the housing of a centrifugal pump and to thus cause a pump stopage.

In Figure 6 is shown a schematic of the Chapel Hill, North Carolina, Waste Treatment Plant. The locations from which trickling filter effluent, primary clarifier effluent, and degritted sewage were diverted to feed the moving bed contactor are indicated on the schematic.

MBC feed was sampled at the overflow of the feed drum and MBC effluent was taken from the catch trough around the screen section. Routine analyses included COD (chemical oxygen demand) and suspended solids, performed according to "Standard Methods" (3), and TOC (total organic carbon), performed according to "FWPCA Methods" (4). Usual procedure was to perform COD and TOC measurements on samples from which solids had not been removed but which had been homogenized. Thus COD and TOC data include contributions from suspended matter.

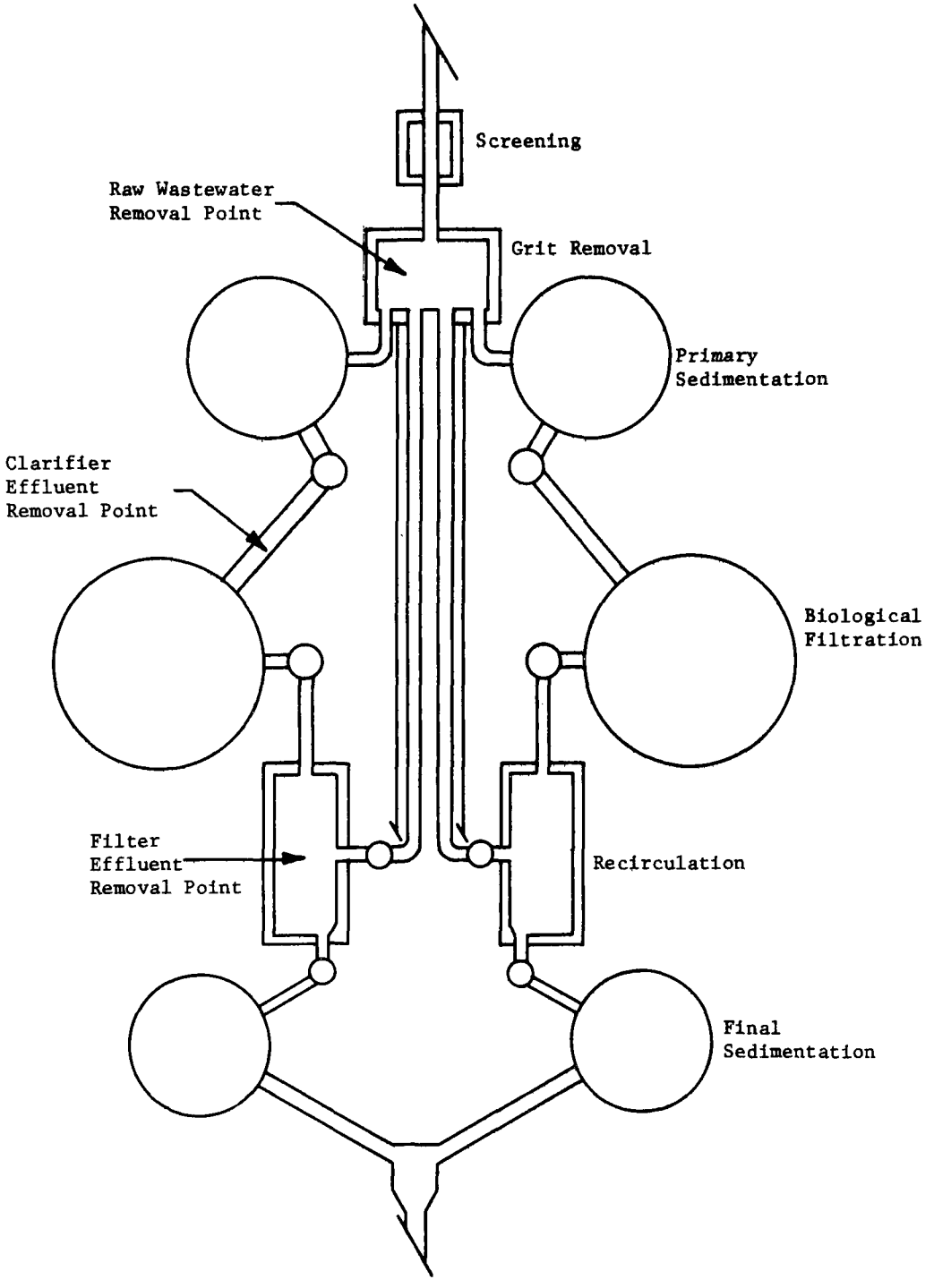

Figure 6. Schematic Diagram--Chapel Hill, N.C., Waste Treatment Plant

SECTION VI

RESULTS

The raw data obtained on the moving bed contactor when utilized as a filter are reproduced in the Appendix. These results are summarized and discussed in this section.

The performance of the unit when removing suspended solids is summarized in Table 1. The data indicate that when processing trickling filter effluent, the removal efficiency decreases as column loading or liquid handling capacity increases. At the lowest flow rate, 3.1 gallons per minute per square foot, the percent of suspended solids removed by the filter seems unusually low, 55.4 percent. These numbers, however, are the result of averaging over 2 days of operation and consequently should be interpreted more as an indication rather than as a statistically significant conclusion.

On one occasion the trickling filter effluent was sampled during a period of unusually high sloughing. The feed concentration of suspended solids to the moving bed unit was 451 mg/l with the moving bed removing all but 56 mg/l. The capability of the filter to remove a higher percentage of a more concentrated feed stream appears to be a generally valid characteristic.

When removing suspended solids from primary clarifier effluent at 5.9 gallons per minute per square foot, the filter removed 53.9 percent of the feed solids. This figure represents a somewhat lower removal level than found for unsettled trickling filter effluent at similar filtration rates.

The unit appears well suited to the removal of suspended solids from raw sewage. As indicated by the data in Table 1, from 62 to 82 percent of the suspended solids in raw sewage was removed by the moving bed unit at flow rates ranging from around 3.5 to 7.5 gallons per minute per square foot. No difficulty was experienced during this phase of the work with filter blinding or with operational instabilities.

The performance of the moving bed unit for COD and TOC removal is summarized in Tables 2 and 3, respectively. Since some of the COD and TOC is dissolved and the balance suspended, the removal of a certain percentage of the suspended impurity results in the removal of a smaller percentage of the total impurity. Since organic removal efficiencies are so strongly dependent on the nature of the suspended solids, the removal of the latter is the primary criterion of process efficiency. The trend toward removal of higher percentages of the impurities in stronger feed streams is evident.

The behavior of the unit was studied with 200 mg/l alum addition to the feed. Under no circumstances did alum addition appear to be helpful. However, as previously noted, in order to achieve satisfactory performance, it was necessary to subject the filter medium to some sort of alum

Table 1
Performance Summary
Moving Bed Filter

Suspended Solids Removal				
Feed	Feed Rate gpm/sq ft	Suspended Solids (mg/l) In	Suspended Solids (mg/l) Out	Percent Removed
Trickling Filter Effluent				
2 day average	3.1	37.0	16.5	55.4
9 day average	4.1	57.8	10.2	82.4
4 day average	5.3	72.0	18.3	74.7
8 day average*	6.9	33.8	12.8	62.2
7 day average	7.9	28.1	12.4	54.3
Primary Clarifier Effluent				
1 day sample	4.3	80	48	40.0
7 day average	5.9	62.9	29.0	53.9
1 day sample	7.2	62	57	8.0
Raw Wastewater				
7 day average	3.4	145.1	34	76.6
2 day average	4.3	189.5	34.5	81.8
5 day average	5.6	156.0	59.4	61.9
1 day sample	7.5	83	20	75.9

*This set of data excludes one anomalous point for which the influent suspended solids level was 451 mg/l. Effluent concentration for this sample was 56 mg/l.

Table 2
Performance Summary
Moving Bed Filter

COD Removal				
Feed	Feed Rate gpm/sq ft	COD (mg/l) In	COD (mg/l) Out	Percent Removed
Trickling Filter Effluent				
2 day average	3.1	118.5	106	10.5
9 day average	4.1	115.3	73.9	35.9
4 day average	5.3	181.8	108.3	40.5
9 day average	6.9	157.1	98.6	37.3
7 day average	7.9	133.2	118.7	10.9
Primary Clarifier Effluent				
1 day sample	4.3	227	173	23.8
7 day average	5.9	162.3	127.2	21.6
1 day sample	7.2	163	154	5.5
Raw Wastewater				
7 day average	3.4	385.1	171.4	55.5
2 day average	4.3	160.0	132.0	17.5
5 day average	5.6	476.0	266.4	44.0
1 day sample	7.5	294	154	47.6

Ambers Lib. of U.S. EPA

Table 3
Performance Summary
Moving Bed Filter

TOC Removal				
Feed	Feed Rate gpm/sq ft	TOC (mg/l) In	Out	Percent Removed
Trickling Filter Effluent				
2 day average	3.1	35.0	31.0	11.4
9 day average	4.1	39.9	24.2	39.2
4 day average	5.3	52.0	36.8	29.3
9 day average	6.9	48.1	41.6	13.6
7 day average	7.9	34.9	30.7	12.0
Primary Clarifier Effluent				
1 day sample	4.3	74	60	18.9
7 day average	5.9	82.7	71.1	14.0
1 day sample	7.2	79	74	6.3
Raw Wastewater				
7 day average	3.4	126.0	53.0	57.9
2 day average	4.3	133.0	64.5	51.5
5 day average	5.6	189.6	127.0	33.0
1 day sample	7.5	99	58	41.4

pretreatment. A continuation of alum addition seemed to have no desirable effect. Also, once accomplished, the alum treatment of the beads seemed permanent. In our experience, a second treatment was not needed for the duration of the project, some 6 months.

A sequence of a half-dozen samples was taken while processing trickling filter effluent and submitted for total phosphate analysis. This was done during the two weeks following alum pretreatment of the beads but without continuing alum addition. The results show little, if any, phosphate removal.

The suspended solids content of sludge as discharged from the sludge settling tank was most often in the range of 300 to 600 mg/l. However, on occasion, values as low as 183 mg/l were observed. A sequence of four runs producing sludge in excess of 1200 mg/l solids showed that the unit was capable of producing a thicker sludge provided more attention was given to the operation of the sludge settling section. On two occasions, values in excess of 2600 mg/l were observed. The solids content in discharge sludge can be raised by adjusting the timing sequence to provide for longer sedimentation periods during the bead harvesting cycle, by more effective baffling in the sludge settling tank, and by more careful placement of the intake of the centrifugal bead washing pump so as to avoid undue sludge dilution.

SECTION VII

RELATED STUDIES

During the course of the investigation several independent studies were undertaken. These studies were aimed in part at explaining the reasons for the observed behavior of the filtration unit and in part to establish the feasibility of ideas for follow-on developmental work.

Electrophoretic Mobility Studies

During the course of the investigation it was observed that polystyrene beads treated with alum produced more effective removal of pollutant materials during filtration of secondary effluent compared to similar beads which had received no alum treatment. It was surmised that this difference in behavior could be attributed to a modification of the surface charge, or zeta potential, of the polystyrene beads resulting from alum treatment. To investigate this hypothesis, experiments were undertaken by Professor Charles R. O'Melia of the Department of Environmental Sciences and Engineering of the University of North Carolina at Chapel Hill to determine the effects of alum treatment on the surface properties of polystyrene under chemical conditions analogous to those in the effluent from the waste treatment plant.

Unexpanded beads were crushed with a hammer, ground with a mortar and pestle, and wet-sieved. Crushed polystyrene which passed a 105μ sieve and was retained on 1.2μ filter paper was thus obtained. This fractionated material was suspended in 5×10^{-3} M $NaHCO_3$ which had been neutralized to pH 7.5 with sulfuric acid. The resulting suspension (pH 7.5, ionic strength about 5×10^{-3}) was similar in these respects to secondary effluent from the Chapel Hill Waste Treatment Plant.

Varying quantities of alum were added to aliquots of this stock suspension accompanied by slow stirring and pH adjustment with $NaHCO_3$. Electrophoretic mobility measurements of the particles in these suspensions were made using a microscope and Briggs cell (5).

The results of these experiments are presented in Figure 7. Particle surface characteristics (electrophoretic mobility, (μ/sec)/(volt/cm), or zeta potential, millivolts) are plotted as functions of applied alum dosage (log scale, moles/l of aluminum sulfate or mg/l of aluminum). The polystyrene particles had an average electrophoretic mobility of -2.9 (μ/sec)/(volt/cm) with addition of alum. This corresponds to a zeta potential in the order of -40 millivolts. While these values are functions of pH and ionic strength, it is probable that this material is negatively charged in the absence of alum or other coagulants under all conditions of interest in water and wastewater.

Increasing addition of alum caused the electrophoretic mobility to become less negative, indicating a reduction in the surface charge of the polystyrene. In no case did the alum neutralize this negative charge, i.e., bring the negative mobility or zeta potential to zero. At high

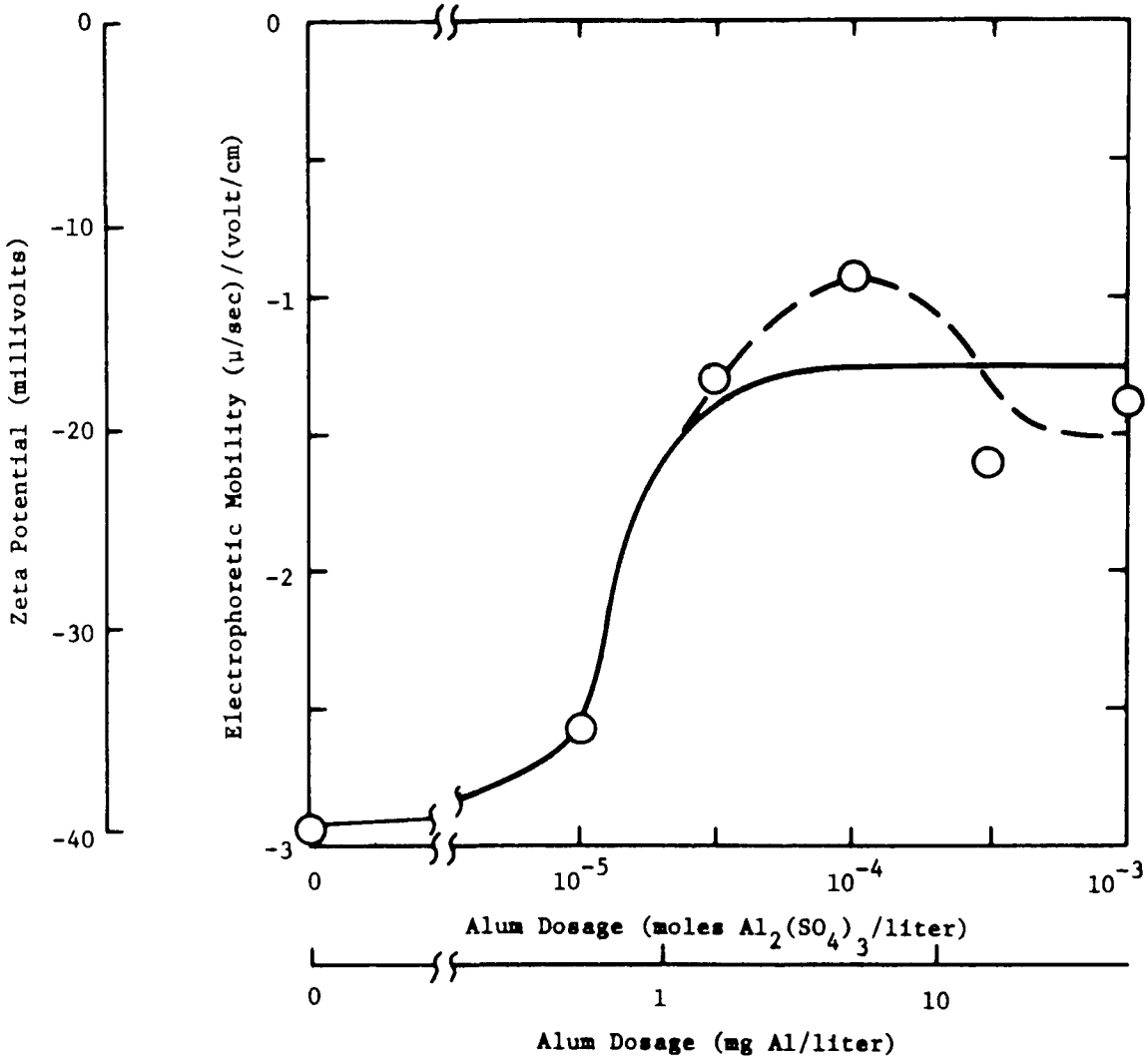

Figure 7. Electrophoretic Mobility of Alum-Treated Polystyrene Particles

alum concentrations ($>10^{-4}$M), it is probable that the particles observed were primarily precipitates of aluminum. The surface properties of aluminum hydroxide should maintain their negative characteristics at all ionic strengths in suspensions at pH 7.5. At lower pH levels, however, these materials could assume a positive charge.

A maximum electrophoretic mobility is observed at an alum dose of about 10^{-4}M. This is difficult to interpret and explain. Possibilities include (a) experimental error, (b) ionic strength effects (the ionic strength of the solution increases with the alum dose due to the alum itself and to the $NaHCO_3$ added), (c) increasing hydrophilicity of the polystyrene particles with increased alum dosage, and (d) the changing character of the particles being observed (polystyrene particles are observed at low alum dosages; some aluminum hydroxide precipitates were probably observed at high alum dosages). Regardless of the cause, however, it is apparent that polystyrene particles remain negatively charged at pH 7.5 at all alum dosages.

The following conclusions can be stated:

1. Polystyrene is negatively charged in water.

2. Polystyrene treated with alum is negatively charged in water at pH 7.5 regardless of the alum dosage.

3. Increased filtration efficiencies of alum-treated polystyrene which are observed in wastewater at pH 7.5 does not appear to be ascribed to charge effects. It is plausible that alum treatment improved filtration in these systems by rendering the surfaces of the polystyrene (a) more hydrophilic, so that materials in suspension were better able to contact the surface of the beads, or (b) more "sticky" or chemically reactive as is the nature of the adsorbed hydroxo-aluminum species.

Perlite Studies

At the beginning of the project polystyrene was selected as the filter medium because of its desirable density and abrasion resistance. Based upon the conclusions of the electrophoretic mobility study, it appears that the hydrophobicity and negative surface charge of polystyrene make it possible that much better filtration performance could be obtained with a filter medium not exhibiting these undesirable characteristics. An attractive alternative filter medium appears to be perlite, which is a naturally occurring siliceous volcanic rock. It is processed to form a foamed, or popcorn-type, particle structure which contains countless tiny air bubbles separated by thin, glassy membranes. Perlite is normally used as a refractory insulation, a concrete or plaster aggregate, or a fertilizer carrier.

Many of the commercially available grades of perlite are fragile and would tend to excessive attrition in the moving bed filter. It is thus necessary to obtain a more robust particle for use as a filter medium.

According to one manufacturer, it may be possible to induce less expansion upon popping the the particles, and thus as an integral part of the manufacturing process, wind up with stronger particles. An alternative method is to coat the particles with silicate.

A jury-rigged fluidized bed assembly was set up to demonstrate the feasibility of a fluidized-bed technique for application of a refractory coating (sodium silicate) to the perlite particles. The technique used was to dilute the sodium silicate with water to reduce its stickiness before gradual addition of the diluted solution to a bed of perlite particles fluidized with heated air. The silicate addition can be done either intermittently or slowly enough to lag the drying so that the particles never become wet enough to hinder the fluidization. By adding a dye to the silicate solution, we were able to confirm that the fluidized bed technique uniformly coated the particles.

To test filtration with perlite, a small, fixed-bed filter was constructed and used in a batch manner to filter effluent alum sludge from a fluidized-bed sludge blanket clarifier. A relatively coarse perlite was used, with size distribution as follows: 50 percent +8 mesh, 45 percent -8 to +16 mesh, and 5 percent -16 mesh. The sludge from the clarifier was filtered at a rate of 12 gallons per minute per square foot. The suspended solids concentration in clarifier sludge was 1,727 mg/l. The filter effluent suspended solids concentration was 121 mg/l after the filtration of 34 gallons of sludge per gallon of beads and 890 mg/l after the filtration of 136 gallons per gallon of beads. This study lends support to the possibility of utilizing the moving bed filter for the dewatering of dilute sludges as well as to the feasibility of perlite as an alternate filter medium.

An advantage of utilizing refractory-coated perlite as the filter medium is the capability of this material to withstand sludge incineration temperatures. This makes possible the direct incineration of sludge from the filter medium without the necessity for washing the filter medium and subsequent dewatering of the wash liquor. An initial demonstration of the feasibility of this idea involved taking a sample of sludge-laden perlite and heating it to incineration temperatures with a propane torch. The sludge burned off evenly and smoothly, and no difficulties were apparent that would interfere with the operation of a continuous process.

In order to evaluate the heat requirements that would be needed for a direct incineration process, several analyses were made of the moisture content and incinerable sludge content of beads as they emerged from the top of the column with the following results:

Percent Solids	Percent Water	$\frac{\text{lb } H_2O}{\text{lb solids}}$
1.3	34	26.2
1.3	31	23.8
1.2	21	17.5
0.7	31	44.3
1.4	23	16.4
1.5	25	16.7
1.4	29	20.7
	Average	23.7

These results indicate that sludge-laden beads, because of their high moisture content, will not sustain combustion without auxiliary heat. In some applications it may be advantageous to supply this heat in order to achieve direct incineration.

An additional application possibility for the moving bed filter is as a contactor for carbon treatment. A method for coating perlite particles with carbon was demonstrated in a small laboratory study by pyrolysis of particles that had been wet with a concentrated sugar solution. The activity of such particles was not studied. Continuing work is needed to establish the conditions under which the char becomes most adsorbent. This would then permit investigation of the performance of the moving bed unit as a carbon contactor.

A projected integrated process utilizing filtration, adsorption, and direct incineration is shown schematically in Figure 8.

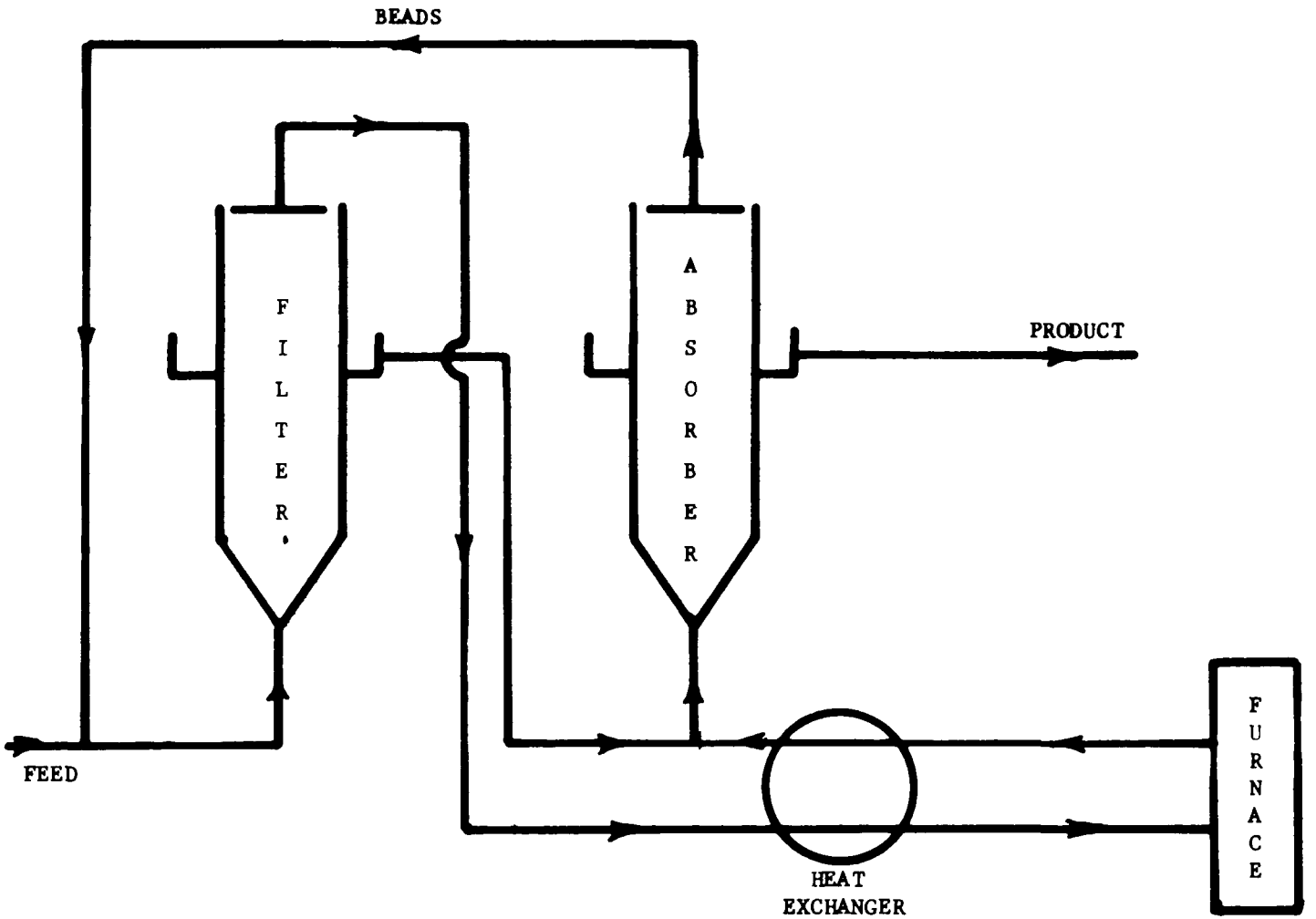

Figure 8. Proposed Combined Filtration-Incineration Process

SECTION VIII

DISCUSSION AND COST ESTIMATES

In this section is presented an estimate of the costs of filtration with the moving bed process and a comparison of these costs with those of other solids removal techniques. The estimate is for a 1 mgd process, assuming 200 mg/l suspended solids removed by Dylite F-40-C polystyrene resin costing $0.25/lb and expanded to a bulk density of 5 lb/ft^3.

Equipment costs were taken from standard reference sources and the filter vessel cost was predicted from the data of Bauman (6) on a price per pound basis for a 13-foot diameter vessel 20 feet tall of 3/8 inch carbon steel (unfired pressure vessel). Cost items were corrected to a 1969 basis by using the PHS Sewage Treatment Cost Index (7) where appropriate.

The following table summarizes the cost of the principal items of equipment (PIE).

TABLE 4

Itemized Equipment Cost

1 MGD Filter Plant

Filter vessel		$ 5,400
Pumps (w/drive)		
(1) Primary feed	$ 900	
(2) Filtrate	150	
(3) Slurry	2,700	
(4) Sludge	180	
		$ 1,380
Tanks		
Filtrate surge	$1,800	
Sludge settling	640	
		$ 2,440
Media scraper		500
Media expander (infrared heated)		2,500
Initial media inventory		3,500
Site preparation and plant connections		2,500
Miscellaneous		1,000
	TOTAL PIE	$19,220

The total capital cost for the principal items of equipment (PIE) was multiplied by a factor which takes into account the following items.

1) As percent of PIE
   a) Plant erection: 30 percent
   b) Instruments: 4 percent
   c) Contingencies: 10 percent
   d) Engineering: 10 percent
   e) Interest on investment during construction: 4 percent
2) As a rate on total investment
   a) Supplies and maintenance materials: 0.5 percent per year
   b) Maintenance labor: 0.5 percent per year
   c) G + A: 30 percent of (a + b)
   d) Payroll extras: 15 percent of (a + b)
   e) Taxes and insurance: 2.0 percent per year
   f) Amortization at 6 percent at 25-year life (7.8 percent per year)

Combination of all the above factors gives a factor of 0.0518 percent on (PIE) in dollars per day as total debt service. (One operating year = 330 days.)

The power requirements for the process have been estimated at 145 kwh/day for the main feed pump and 18 kwh/day each for the bypass pump and the bead scraper for a total requirement of 181 kwh/day. At $0.01/kwh, the total power cost is 0.18¢/1000 gal.

An estimate of 0.5¢/1000 gal. was taken for loss of filter medium. Experience has shown that medium losses can easily be kept within this figure.

Labor costs were found by assuming 3 man-hours per day and 6 man-hours per day for 1 and 5 million gallon plants, respectively, at $3.50 per hour. Thus, labor costs for each plant are 1.1¢ and 0.42¢/1000 gal., respectively. It might be reasonable to suppose, however, that the operating labor for the smaller plant could be absorbed by existing personnel. Labor costs for small plants are usually disproportionately large in comparison to other operating costs on a per gallon basis.

A summary of these cost estimates follows:

TABLE 5

MBC Process Operating Costs

Capacity	1 MGD	5 MGD
Debt service	1.00	0.53
Power cost	0.18	0.18
Medium loss	0.50	0.50
Labor	1.10	0.42
	2.78¢/1000 gal.	1.63¢/1000 gal.

These costs compare quite favorably with estimates for other solids removal processes. The following table compares MBC costs with those for filtration utilizing a mechanically propelled bed (9), with those for microscreening (8), and with those for fixed bed filtration (8).

TABLE 6

Cost Comparisons

	1 MGD	5 MGD
Moving Bed Contactor	2.8¢/1000 gal.	1.6¢/1000 gal.
Mechanically Driven Bed	7.2	
Microscreening	1.2	1.1
Fixed Bed	6.5	3.6

Surface loadings forming the bases for these costs estimates are the following: for the moving bed contactor, 7 gpm/ft^2; for the mechanically driven bed, 2 gpm/ft^2; and for the fixed bed, 4 gpm/ft^2. The cost basis for microscreening is not reported, but typical loadings for such equipment are about 10 to 30 gpm/ft^2.

The moving bed unit should be easily scalable to a diameter of about 10 feet. A unit of this size should handle almost one million gallons per day. For larger requirements, modular construction would probably be desirable.

SECTION IX

ACKNOWLEDGMENTS

We wish to acknowledge the assistance and contributions of the following:

The Environmental Protection Agency and Mr. James F. Kreissl, Project Officer, for financial support and many valuable suggestions.

The University of North Carolina Wastewater Research Center for providing facilities, services, and analytical assistance.

Mr. Bill Sun for day-to-day attendance of the equipment.

Professor Charles O'Melia, UNC School of Public Health, for electrophoretic mobility studies.

Eliza Rucker for secretarial and computational assistance.

Dr. J. C. Orcutt, co-inventor and co-applicant along with F. O. Mixon, for patent coverage of the MBC.

SECTION X

REFERENCES

1. Ives, K. J., "Research on Deep Filters," Trans. Instn. Chem. Engrs., 43, pp. T238-T247 (1965).

2. ASCE Manual of Engineering Practice No. 36 (WPCF Manual of Practice No. 8), Sewage Treatment Plant Design, New York (1959).

3. American Public Health Association, Inc., Standard Methods for the Examination of Water and Wastewater, New York (1965).

4. Federal Water Pollution Control Administration, FWPCA Methods for Chemical Analysis of Water and Wastes, (November, 1969).

5. Black, A. P., and Smith, A. C., "Determination of the Mobility of Colloidal Particles by Microelectrophoresis," Journal, Amer. Wat. Works Assn., 54, pp. 926-934 (1962).

6. Bauman, H. C., paper presented to A.A.C.E., June (1958).

7. Smith, R., PB 182 158, "Cost of Conventional and Advanced Treatment of Wastewaters," July (1968).

8. Smith, R., and McMichael, W. F., "Cost and Performance Estimates for Tertiary Wastewater Treating Processes," Robert A. Taft Water Research Center, Cincinnati, Ohio (June 1969).

9. Bell, G. R., et al, "Phosphorus Removal Using Chemical Coagulation and a Continuous Countercurrent Filtration Process," FWQA Water Pollution Research Series, 19010 EDO 06/70 (June 1970).

SECTION XI

PATENT STATUS

The initial patent application on the Moving Bed Contactor was filed 1 September 1970, Serial No. 68,611. On November 24, 1971, the initial application was disallowed. An amendment was prepared and filed on the patent on February 16, 1972. On March 21 all claims were allowed.

SECTION XII

APPENDIX

Performance Data--Moving Bed Filter

APPENDIX
Performance Data
Moving Bed Filter

Date	Rate (gpm)	Temp °F	COD (mg/l) In	COD (mg/l) Out	TOC (mg/l) In	TOC (mg/l) Out	Suspended Solids (mg/l) In	Suspended Solids (mg/l) Out	Sludge SS (mg/l)	Remarks
1/5				57	21	22	19	11		Bed depth at 1.5 ft. Fresh, untreated filter medium. Processing unsettled trickling filter effluent.
1/6				64	51	20	73	4		
1/7				66	80	24	116	2		
1/8				91		21		1		
1/11				276	59	82	120	34		
1/12				148	47	41	30	16		
1/13				123	69	25	78	3		
1/18	6.8	60	184	244	58	80	41	106		
1/19	7.5	53	154	132	55	49	31	23		
1/20	7.6	59	139	148	52	49	31	22		
1/22	8.3	59	127	139	56	38	30	25		
1/25	8.6	61	95	133	60	58	27	24		
1/26	8.5	61	147	102	41	35	43	16		
1/27	8.2	58	155	120	54	36	29	14		
1/28	8.4	58	137	149	25	23	29	22		
1/29	8.8	58	149	131	38	33	22	18		
2/1	9.1	54	109	94	63	56	50	25		
2/2	8.9	58	194	139	54	43	44	47		
2/3	8.8	50	169	137	55	48	28	21		
2/4	8.9	51	256	237						
2/5	8.6	51	140	110	41	37	28	18		
2/8	16.9	51	85	107	34	31	35	37		
2/9	13.2	57	269	209	70	47	92	48		
2/10	14.1	49	115	105	39	34	31	44		
2/11	14.3	56	165	262	53	45	52	61		
2/12	14.2	51	145	220	73	90	61	66		

Date	Rate (gpm)	Temp °F	COD (mg/1) In	COD (mg/1) Out	TOC (mg/1) In	TOC (mg/1) Out	Suspended Solids (mg/1) In	Suspended Solids (mg/1) Out	Sludge SS (mg/1)	Remarks
2/15	14.5	53	168	163	52	60	68	58		
2/16	16.3	60	162	149	57	56	52	40		At this point the bed depth for filtra-
2/17	11.7	58	147	90	50	36	54	20		tion was increased by adding another box
2/18	12.1	59	160	130	53	45	34	25		of beads. After this addition the fil-
2/22	7.3	61	232	188	75	69	60	27		tration depth was 4 ft. This depth, how-
2/23	7.8	63	146	117	55	43	38	12		ever, showed signs of getting smaller as
2/24	7.4	59								the beads compacted during filtration.
3/22	12.1	61	177	128	73	58	84	79		
3/23	16.3	64	273	232	73	87	69	88		
3/24	9.8	60	210	180	62	46	87	51		Filtration depth increased to about 6 ft
			255	210	78	57	104	88		at this point.
3/25	4.3	61	265	263	75	74	136	156		
3/26	1.8	51	233	208	74	66	125	101		
3/29	.7	59	179	142	66	61	66	22		
3/31	6.4	59	213	238	62	69	111	182		Scraper assembly modified. Screw section
										mounted directly in converging section.
4/1	9.6	63	147	188	67	89	107	82		
4/2	10.3	61	200	202	72	73	90	90		
4/5	8.1	61	139	153	46	44	89	95		
4/6	11.5	59	175	130	53	39	70	22		
4/7	5.3	58	186	121	72	45	146	49		
4/8	10.3	64	111	68	37	33	43	38		
4/9	9.8	61	132	187	51	62	46	133		
4/12	8.7	62								
4/13	6.3	63	133	123	56	53	62	63		
4/14	10.1	62	104	150	46	57	34	100		
4/15	11.3	62	123	113	56	64	18	30		
4/16			132	127	63	63	34	30		
4/19	9	63	88	142	44	64	20	71		
4/20	13.1	73	109	160	48	57	25	64		

Date	Rate (gpm)	Temp °F	COD (mg/l) In	COD (mg/l) Out	TOC (mg/l) In	TOC (mg/l) Out	Suspended Solids (mg/l) In	Suspended Solids (mg/l) Out	Sludge SS (mg/l)	Remarks
4/21	11.3	70	105	127	47	48	22	53		
4/22	11.0	70	115	125	42	48	25	51		
4/23	9.5	63	124	156	41	50	21	49		
4/26	10.5	69	149	179	63	67	69	84		
4/27	10.4	70	123	196	64	77	106	123		
4/28	5.3	69	95	129	52	57	55	67		
4/29	7.9	69								
5/3	10.3	62			43	41	54	24		
5/4			149	182	49	58	50	68		
5/17	10	71	115	73	56	22	29	28		Alum addition to feed started at 200 mg/l.
5/18	9.8	74	115	131	44	56	22	45		
5/19	8.2	80	150	154	89	92	32	125		
5/20			131	356	47	132	212	238		
5/21	10	71	95	71	72	26	59	42		
5/24	8.5	71	142	164	83	67				
5/25	5.6	72	127	221	67	98				
5/26	6.3	73	85	40	50	28	11	20		
5/27	7.2	74	95	139	51	67	147	24		
6/14	10.4	82					29	157		
6/15	10.8	76					68	112		
6/23			99	98	48	41	44	23		Alum addition stopped.
6/24	9.7	79	84	77	37	27	21	9		
6/25	12	79	97	92	39	35	13	5		
6/28	16.3	79	160	83	36	29	43	8		
6/29	16.5	81	222	159	71	52	105	38		
6/30	17.2	80								
7/1	17	78	210	98	57	32	96	15		
7/2	16.5	80	135	93	44	34	44	12		

Date	Rate (gpm)	Temp °F	COD (mg/l) In	COD (mg/l) Out	TOC (mg/l) In	TOC (mg/l) Out	Suspended Solids (mg/l) In	Suspended Solids (mg/l) Out	Sludge SS (mg/l)	Remarks
7/5			88	69	27	21	30	5		Polyethylene added
7/6	13.4	79	265	132	55	40	299	26		
7/9	19	81	125	118	42	35	29	20		
7/12	22.3	73	130	81	34	28	16	12		
7/13	22.5	79	74	71	31	29	19	9		
7/14	21.4	80	102	78	30	28	28	17		
7/15	21.5	79	156	117	47	36	56	18		
7/16	19.8	80	510	185	138	137	451	56		From 7/16 until 8/24 plant recycle was
7/19	22.5	80	88	36	31	25	22	8		introduced after the primary clarifier
7/20	22.5	80	127	94	48	28	81	16		rather than before. No significant dif-
7/21	9.9	80	153	135	33	35	53	24		ference in suspended solids content re-
7/22	11.8	80	77	50	28	19	16	6		sults.
7/23	16.1	78	85	82	26	18	17	7		
7/26	21.7	78	198	70			99	33		
7/27	14.1	78	298	235	111	113	202	165		Started alum addition at 200 mg/l.
7/28	16.1	80	271	216	80	72	123	88		
7/29	13.4	80	184	203	62	59	109	133		
7/30	13.4	80	149	89	47	28				
8/2	16.1	80	95	73	25	22	27	15		
8/3	14.1	80	90	66	28	20	25	66		Stopped alum addition.
8/5	13.1	80	132	93	22	12	22	7		
8/6	13.1	80	80	27	32	24	27	6		
8/9	13.1	80	98	73	92	20	25	5		Total PO_4 (mg/l)
8/10	22.5	80	102	107	26	28	19	13		In / Out
8/11	23.4	80	125	134	39	32	18	11		7.5 / 8.4
8/12	25.6	78	144	120	42	35	25	10		6.8 / 6.5
8/13	23.4	74	182	170	32	38	39	30		8.0 / 8.5
8/16	21.6	78	99	73	26	22	29	13		
8/17	23.4	74			37	24	35	12		6.6 / 6.3
8/18	25.6	75	80	51	24	21	21	2		4.2 / 8.3

Date	Rate (gpm)	Temp °F	COD (mg/l) In	COD (mg/l) Out	TOC (mg/l) In	TOC (mg/l) Out	Suspended Solids (mg/l) In	Suspended Solids (mg/l) Out	Sludge SS (mg/l)	Remarks
8/19	25.6	82	153	127	46	28	33	11		Total PO_4 (mg/l)
8/20	25.6	78	115	110	24	37	26	11		In / Out
8/24	12.0	78	58	63	33	25	25	7		7.1 / 6.4
8/25	12.8	78	101	53	27	21	44	19		
8/26	13.7	78	130	82	31	22	49	11		
8/27	13.1	78	140	93	118	111				
8/30			252	224	61	72	76	34		Transferred to primary clarifier effluent.
9/3	13.4	79	227	173	74	60	80	48		
9/8	18.7	80	185	146	79	64	40	3		
9/9	22.5	80	163	154	79	74	62	57		
9/15			455	226	167	174	202	50		Transferred to raw wastewater.
9/16	18.7	81	453	345	152	120	145	75		
9/17			439	227	87	84	118	37		
9/20	18.7	79	513	248	240	126	193	69		
9/21	18.7	78	520	286	302	131	122	66		
11/3	7.5	76	212	170	62	47	59	13		
11/4	7.3	63	179	133	55	41	51	15		
11/5	10.0	68	235	175	63	51	56	21		
11/8	11.8	69	182	142	95	77	68	33		
11/11	12.5	70					50	14		Increased bed depth to 6 ft and started alum treatment for bed conditioning.
11/16	18.8	71	128	70	88	76	82	38	406	Clarifier effluent.
			218	170	95	85	71	35	198	
11/17	18.2	68	110	115	62	59	42	27	512	
			176	143	92	80	89	39	427	
11/18	18.2	69	157	119	77	62	47	23	638	
					86	72	69	38	471	
11/19	16.6	71	168	80	48	44	101	52	508	Raw wastewater.

Date	Rate (gpm)	Temp °F	COD (mg/l)		TOC (mg/l)		Suspended Solids (mg/l)		Sludge SS (mg/l)	Remarks
			In	Out	In	Out	In	Out		
11/22	13.4	66	160	132	142	54	260	38	334	
					124	75	119	31	679	
11/23	23.5	65	294	154	99	58	83	20	2,601	
11/29	11.0	61	404	133	123	54	174	23	1,177	
			450	278	150	91	178	42	824	
11/30	9.9	64	419	227	142	71	115	20		
12/1	10.8	62	244	115	82	32	131	21	2,956	
			520	120	110	28	153	32	350	
12/2	10.6	61	317	205	172	64	140	73	1,496	
			342	122	103	31	125	27	1,349	Alum added.
12/3			351	137	115	39	144	73	1,236	
12/6	10.4	62	149	130	49	39	50	80	1,237	
12/7	11.0	69	187	158	57	44	49	108		
12/9	9.4	67	194	213	66	57	63	113	293	
12/16	9.4	71	345	162	144	67	196	56	411	
12/17		68	377	64	130	20	133	13	355	
12/20		67	393	63	134	17	169	8	183	

☆ U. S. GOVERNMENT PRINTING OFFICE: 1972—484-486 (276)

SELECTED WATER RESOURCES ABSTRACTS

INPUT TRANSACTION FORM

1. Report No.

2.

3. Accession No.

W

4. Title

FILTRATION OF MUNICIPAL WASTE WITH A MOVING BED CONTACTOR,

5. Report Date

6.

8. Performing Organization Report No.

7. Author(s)

MIXON, F. O.

10. Project No.

17030 FWH

9. Organization

Research Triangle Institute
Environmental Studies Center
Research Triangle Park, North Carolina 27709

11. Contract/Grant No.

14-12-895

13. Type of Report and Period Covered

12. Sponsoring Organization

15. Supplementary Notes

16. Abstract

A novel moving bed contactor has been utilized in filtration studies of municipal waste at various stages within a trickling filter plant.

Granular, buoyant filter medium is slurried with process feed and introduced to the bottom of a column equipped with lateral retaining screens and filter medium harvesting machinery, both positioned toward the top of the column. Within the column, filter medium rises by buoyancy and forms a porous plug that traps suspended solids from the feed stream. Filtered liquid is removed from the lateral screen, and soiled filter medium is continuously removed from the column top, washed, and recycled to the column bottom.

The process operates stably and dependably on all feeds tested--raw wastewater, primary clarifier effluent, and trickling filter effluent. Suspended solids removals of 60 to 80 percent can be achieved at column loadings up to 7.5 gal/min/sq ft. Filtration of alum-coagulated feed is less effective than that of untreated feed.

17a. Descriptors

*Filtration, *Separation techniques, *Sewage treatment,

17b. Identifiers

*Continuous filtration, *Floating media, *Suspended solids, Trickling filter

17c. COWRR Field & Group 05 D

18. Availability

19. Security Class. (Report)

20. Security Class. (Page)

21. No. of Pages

22. Price

Send To:

WATER RESOURCES SCIENTIFIC INFORMATION CENTER
U.S. DEPARTMENT OF THE INTERIOR
WASHINGTON, D. C. 20240

Abstractor James F. Kreissl

Institution EPA-NERC, Cincinnati, Ohio