EPA-460/3-74-009-b
June 1974

FEASIBILITY STUDY OF ALTERNATIVE FUELS FOR AUTOMOTIVE TRANSPORTATION VOLUME II - TECHNICAL SECTION

U.S. ENVIRONMENTAL PROTECTION AGENCY
Office of Air and Waste Management
Office of Mobile Source Air Pollution Control
Alternative Automotive Power Systems Division
Ann Arbor, Michigan 48105

EPA-460/3-74-009-b

FEASIBILITY STUDY OF ALTERNATIVE FUELS FOR AUTOMOTIVE TRANSPORTATION VOLUME II - TECHNICAL SECTION

Prepared by

F. H. Kant, R. P. Cahn, A. R. Cunningham,
M. H. Farmer, W. Herbst, and E. H. Manny

Exxon Research and Engineering Co.
P. O. Box 45
Linden, New Jersey 07036

Contract No. 68-01-2112

EPA Project Officer:

C. E. Pax

Prepared for:

U.S. ENVIRONMENTAL PROTECTION AGENCY
Office of Air and Waste Management
Office of Mobile Source Air Pollution Control
Alternative Automotive Power Systems Division
Ann Arbor, Michigan 48105

June 1974

This report is issued by the Environmental Protection Agency to report technical data of interest to a limited number of readers. Copies are available free of charge to Federal employees, current contractors and grantees, and nonprofit organizations - as supplies permit - from the Air Pollution Technical Information Center, Environmental Protection Agency, Research Triangle Park, North Carolina 27711; or may be obtained, for a fee, from the National Technical Information Service, 5285 Port Royal Road, Springfield, Virginia 22151.

This report was furnished to the U. S. Environmental Protection Agency by Exxon Research and Engineering Co. in fulfillment of Contract No. 68-01-2112 and has been reviewed and approved for publication by the Environmental Protection Agency. Approval does not signify that the contents necessarily reflect the views and policies of the Agency. The material presented in this report may be based on an extrapolation of the "State-of-the-art." Each assumption must be carefully analyzed by the reader to assure that it is acceptable for his purpose. Results and conclusions should be viewed correspondingly. Mention of trade names or commercial products does not constitute endorsement or recommendation for use.

Publication No. EPA-460/3-74-009-b

TABLE OF CONTENTS

		Page
1.	SUMMARY AND HIGHLIGHTS	1
	1.1 Summary	1
	1.2 Highlights	5
2.	OBJECTIVES OF STUDY AND APPROACH	20
	2.1 Objectives	20
	2.2 Approach	21
3.	BACKGROUND AREAS	22
	3.1 Introduction	22
	3.2 Relationship to Energy Supply/Demand in General	22
	3.3 Future Demand for Automotive Fuels	23
	3.4 Domestic Resource Base	24
	3.4.1 U.S. Coal Resources	25
	3.4.2 U.S. Oil Shale Resources	25
	3.4.3 U.S. Petroleum Resources	25
	3.4.4 U.S. Natural Gas Resources	27
	3.4.5 U.S. Nuclear Energy Resources	27
	3.5 Build-up of Synthetic Fuels Capacity	27
	3.6 Criteria for Fuel Selection	28
	3.6.1 Economic Criteria	28
	3.6.2 Technical Criteria	29
	3.6.3 Performance Criteria	30
	3.6.4 Strategic Criteria	31
4.	SELECTION OF FUELS FOR IN-DEPTH ANALYSIS	32
	4.1 Initial List of Fuels	32
	4.2 Physical and Chemical Properties	33
	4.2.1 Combustion Properties	33
	4.2.2 Vehicular Storage Requirements of Fuels	37
	4.2.3 Bulk Handling and Storage of Fuels	40
	4.2.4 Automotive Maintenance	44
	4.2.5 Data Gaps	44
	4.3 Cost of Manufacture and Distribution	47
	4.4 Fuel-Vehicle Compatibility	56
	4.4.1 Modifications Required to Achieve Fuel/Vehicle Compatibility	57

Page

4.5 Environmental Effects - 66
4.5.1 Resource Production - - - - - - - - - - - - - - - - - - - 66
4.5.2 Manufacture and Distribution - - - - - - - - - - - - - - 68
4.5.3 Exhaust Emissions - 69

4.6 Toxicity and Safety - 75
4.6.1 Toxicity - 75
4.6.2 Safety - 80

4.7 Ranking of Fuels - 81

5. COST OF AUTOMOTIVE FUELS BASED ON COAL AND SHALE - - - - - - - - - 86

5.1 Fuels From Oil Shale - 86
5.1.1 Mining - 86
5.1.2 Crushing - 87
5.1.3 Retorting - 87
5.1.4 Shale Oil Upgrading - - - - - - - - - - - - - - - - - - - 94
5.1.5 Water Requirements - - - - - - - - - - - - - - - - - - - 97
5.1.6 Economics of Syncrude Production - - - - - - - - - - - - 97
5.1.7 Shale Syncrude Refining - - - - - - - - - - - - - - - - - 104
5.1.8 Distribution and Marketing - - - - - - - - - - - - - - - 108
5.1.9 Cost Projections: 1982-2000 - - - - - - - - - - - - - - 113

5.2 Hydrocarbon Fuels From Coal - - - - - - - - - - - - - - - - - - 114
5.2.1 Coal Mining - 114
5.2.2 Coal Liquefaction - 117
5.2.2.1 Pyrolysis - 118
5.2.2.2 Hydrogenation - - - - - - - - - - - - - - - - - - 118
5.2.2.3 Fischer/Tropsch - - - - - - - - - - - - - - - - - 122
5.2.3 Economics of Syncrude Manufacture From Coal - - - - - - 123
5.2.3.1 Process Selection and Economic Bases - - - - 123
5.2.3.2 Investments and Operating Costs - - - - - - - 127
5.2.4 Syncrude Refining - 132
5.2.5 Distribution and Marketing - - - - - - - - - - - - - - - 133
5.2.6 Cost Projections: 1982-2000 - - - - - - - - - - - - - - 133

5.3 Methanol From Coal - 134
5.3.1 Process Description - - - - - - - - - - - - - - - - - - - 134
5.3.2 Economic Basis - 140
5.3.3 Cost of Methanol Manufacture - - - - - - - - - - - - - - 149
5.3.4 Economic Sensitivities - - - - - - - - - - - - - - - - - 152
5.3.5 Distribution and Marketing - - - - - - - - - - - - - - - 152
5.3.6 Cost Projections: 1982-2000 - - - - - - - - - - - - - - 157

5.4 Comparison of Costs - 157

5.5 User Economics - 162

Page

6. PERFORMANCE OF FUELS BASED ON COAL AND SHALE - - - - - - - - - - - - 167

6.1 Performance of Gasolines and Distillates From Shale and Coal - - - - - - - - - - - - - - - - - - 167
6.1.1 Coal and Shale Gasolines - - - - - - - - - - - - - - - - - 167
6.1.2 Coal and Shale Distillates - - - - - - - - - - - - - - - - 173

6.2 Performance of Methanol and Methanol/Gasoline Blends - 175
6.2.1 Methanol - 175
6.2.2 Methanol/Gasoline Blends - - - - - - - - - - - - - - - - - 176

7. EVOLUTIONARY CONSIDERATIONS - 189

7.1 The New Engine/New Fuel Dilemma - - - - - - - - - - - - - - - - - 189
7.2 The Compatibility Scenario - - - - - - - - - - - - - - - - - - - 190
7.3 Automotive Fuel Blends - 191
7.4 Automotive Distillate Fuels - - - - - - - - - - - - - - - - - - - 193
7.4.1 Automotive Diesel Fuel - - - - - - - - - - - - - - - - - - 193
7.4.2 Other Automotive Distillate Fuels - - - - - - - - - - - - - 194
7.5 The Fleet Account Stratagem - - - - - - - - - - - - - - - - - - - 195
7.6 Automotive Hydrogen - 196
7.7 Labor Force Requirements and Implications - - - - - - - - - - - 197
7.8 Capital Availability and Investment Implications - - - - - - - 199

8. INFORMATION GAPS - 201

8.1 Research Data Gaps - 201
8.1.1 Fuels From Shale Oil - - - - - - - - - - - - - - - - - - - 201
8.1.1.1 Mining and Retorting - - - - - - - - - - - - - - - 201
8.1.1.2 Upgrading and Refining - - - - - - - - - - - - - - 202
8.1.1.3 Use - 202
8.1.2 Hydrocarbon Fuels From Coal - - - - - - - - - - - - - - - 203
8.1.2.1 Mining - 203
8.1.2.2 Upgrading and Refining - - - - - - - - - - - - - - 203
8.1.2.3 Use - 204
8.1.3 Methanol From Coal - 205
8.1.3.1 Manufacture - 205
8.1.3.2 Distribution and Use - - - - - - - - - - - - - - - - 205
8.2 Other Information Gaps - 206

9. CONCLUSIONS - 207

10. REFERENCES - 211

11. GLOSSARY - 222

FOREWORD

For convenience, the material covered in this report is divided into three volumes. Volume I is an executive summary comprising the report summary, highlights of the various sections and a list of conclusions. Volume II is the technical section, which is a complete description of the work carried out under this contract. It includes the sections bound separately in Volume I. Volume III includes the appendices, which deal with supplementary material for some of the topics discussed in Volume II.

1.1 SUMMARY

This study identifies feasible and practical alternatives to automotive fuels derived from petroleum for the 1975-2000 time period. The alternative fuels are liquids derived from domestic coal and oil shale -- specifically, gasolines, distillates, and methanol. While many uncertainties remain, initial production of the new fuels is likely within the next five to seven years.

The United States has vast resources of coal and oil shale, sufficient to permit large scale production of synthetic fuels. However, other factors such as the availability of skilled manpower and water are expected to constrain the rate at which the resources can be developed. Complete replacement of petroleum with synthetic fuels is therefore improbable until after the turn of the century. Rather, it appears that the alternative fuels will begin to be used in conjunction with petroleum, that usage will expand as availability increases, and that the approach to complete replacement will be evolutionary.

The study shows that there is an excellent chance of developing alternative automotive fuels, or blending components, that can take advantage of the existing distribution and marketing system for automotive fuels. Additionally, the new products may satisfy the fuel requirements of conventional vehicles as well as the anticipated needs of several types of automotive power plants now under development. Not surprisingly, fuels similar to petroleum, derivable from both coal and oil shale, present the least difficulty and uncertainty.

While differing in estimated cost, the individual fuels examined in detail may all be producible at a cost level or range projected for petroleum fuels. Indeed, the shale fuels may be significantly lower in cost. Nevertheless, the estimates of cost are sensitive to more than technological uncertainties. For example, costs are sensitive to assumptions that concern inherently unpredictable matters such as surface mining legislation, leasing policy, and required level of investment return.

Early in 1974 consumption of automotive fuel was just over six million barrels/day (MMB/D) or 12 x 10^{15} BTU/year, and this may be taken as a lower bound of future consumption. Upper limits are estimated to be about 9.5 MMB/D or 19 x 10^{15} BTU/year in 1985 and 12.5 MMB/D or 25 x 10^{15} BTU/year in the year 2000. The total output of synthetic fuels, for all purposes, including automotive fuels, could reach 25 x 10^{15} BTU/year by the year 2000, but will only be about 4 x 10^{15} BTU/year in 1985, which is about a third of the minimum projected automotive fuel demand.

Fuels were screened on the basis of economic, technical, and performance criteria, with consideration given to the way in which each new fuel could be brought into general use. Consideration was also given to the environmental impact of producing and using the fuels. From a fairly comprehensive list of initial candidates, feasible and practical alternative automotive fuels were identified:

- gasoline-type and distillate-type fuels from oil shale

- gasoline-type, distillate-type, and methanol fuels from coal.

Each of these five fuels was then evaluated in detail.

For the shale-derived fuels, the analysis began with mining, crushing and retorting of the oil shale. The raw shale oil was upgraded, and then transported by pipeline to a plant capable of converting the shale syncrude into automotive fuels. The latter were then fed into a distribution and marketing system, ending at a fuel pump in a service station. Investment and operating costs were estimated for the entire system for three points in time: 1982, 1990 and 2000.

The same procedure was applied to the petroleum-type fuels derivable from coal, except that mining was followed by liquefaction rather than retorting. Methanol from coal was made by gasification, followed by methanol synthesis. In this case, the methanol product entered the distribution and marketing system without additional processing steps other than keeping the fuel dry throughout the system.

Based on 1973 constant dollars, the costs per million BTU estimated for the five fuels were*: (including a 10% discounted cash flow return on investment)

		1982		1990	2000
		$/MMBTU	¢/Gal.	— $/MMBTU —	
Shale:	gasoline	2.65	31.5	2.60	2.15
	distillate	2.05	26.5	2.00	1.65
Coal:	gasoline	3.35	39.5	3.15	2.65
	distillate	2.75	36.5	2.50	2.10
	methanol	3.85	22.	3.40	2.95

1973 $, ex tax at pump

Because internally consistent assumptions were used, the cost estimates are more reliable on a relative rather than on an absolute basis. However, the differential between the gasoline-type and distillate-type fuels depends on a "prudent" refining scheme in which the ratio of gasoline

* It must be stressed that these are 1973 costs. As of May 1974, costs for capital projects have escalated substantially in excess of general inflation.

to distillate is not less than about 2:1. The shale-derived fuels are projected to be cheaper than coal-derived fuels over the entire time-frame of the study. However, the quantitative development of shale oil will probably be limited environmentally and by other resources, such as manpower and water, rather than by economics and potential demand.

The ranking of fuels was not changed by consideration of user economics, i.e., the total cost of vehicle operation as opposed to fuel cost alone.

Potential product quality problems, related to the aromaticity of coal-derived fuels on the one hand and the paraffinicity of shale-derived fuels on the other, can most easily be dealt with by blending with petroleum fractions, or with each other. Product quality considerations with methanol depend on whether it will be used alone or in gasoline blends. In the former case, significant efficiency improvements in a spark-ignition engine seem possible if the engine is modified. However, such a modified engine would not be compatible with gasoline fuel.

Methanol appears to be an excellent gas turbine fuel. In particular, it could find growing application in stationary turbines where bulk deliveries minimize the relatively high distribution costs of methanol vs. hydrocarbon fuels. Methanol is also a leading candidate for fuel cells, used either directly or via reforming to hydrogen.

The use of methanol/gasoline blends in spark-ignition engines could lead to performance problems due to water sensitivity, vapor lock, and excessive leaning out of the engine. On the other hand, use of these blends would result in improved octane quality and could lead to significant fuel economy savings, in miles/BTU.

The uncertainties about the performance of methanol have to be resolved before its merits relative to hydrocarbons can be established. On balance, however, the compatibility of shale and coal hydrocarbons with petroleum is a key point in favor of these fuels.

There is a critical need for product quality and performance data on fuels from coal and shale, alone and in blends. This is one of the research data gaps identified in a separate phase of the study. Other data or technology gaps include:

- New or improved technology for:
  - in-situ recovery of shale oil
  - hydrogen production for coal liquefaction
  - selective removal of S, N, and O from coal and shale
  - coal gasification plus methanol synthesis

- Large-scale demonstration of environmentally acceptable disposal of spent shale and reclamation of surface-mined coal areas.

- General studies dealing with:

  - alternative automotive fuels in the context of the entire economy, based on utilizing all resources including petroleum

  - water availability in the Western states

The future availability of capital will have a strong influence on investment priorities. This is an argument in favor of alternative fuels, such as shale and coal gasolines and distillates, which are compatible with the existing petroleum-based system. Major investments are beginning to be made in these synthetic fuels. For example, about $450 million was bid on the first four shale tracts recently leased by the government. Research and development programs on coal liquefaction by industry and government, including construction of various demonstration units, will probably total over one billion dollars in the next five years. Some products of such shale and coal conversion plants will surely find their way into the automotive fuel market. There is therefore beginning to be a commercial underpinning of the technological and economic feasibility conclusions drawn in this study.

1.2 HIGHLIGHTS

The highlights that follow reflect the contractor's judgment of what are the most important points in each of the detailed sections of the report.

Objectives (2.1)

- Identify feasible and practical automotive fuels that are producible from non-petroleum sources.
- Define the alternative automotive fuels in terms of: when? how much? at what cost?
- Consider safety, toxicity, reliability, compatibility with different engines, and convenience of use.
- Identify R&D and other information gaps.

Approach (2.2)

- Select alternative fuels with a reasonable chance of being feasible and practical within the 1982-2000 time-frame which is the most important with regard to potentially new fuels.
- Use preliminary screening to permit concentration of effort on a small number of the most promising fuels to get maximum information on cost, availability, and performance.

Relationship to Energy Supply/Demand in General (3.2)

- Automotive fuel questions should not be divorced from energy matters in general.
- Detailed analysis of "externalities" is beyond the scope of the study, but identification and rough quantification of the most important externalities is possible.
- With some modification, the Department of Interior's energy forecast of December 1972 may be used quantitatively as an energy context for alternative automotive fuels.

Automotive Fuel Demand (3.3)

- The goals of "Project Independence" probably set upper limits on automotive fuel consumption of about 9.5 MM B/D in 1985 and 12.5 MM B/D in the year 2000. Consumption of just over 6 MM B/D, early in 1974, may be taken as a lower limit.

Domestic Resource Base (3.4)

- The principal domestic fossil fuel resources are petroleum, coal and oil shale. Nuclear energy may facilitate the utilization of these resources.

- Other energy resources can lessen the industrial or stationary demand for the principal fossil fuel resources, thereby increasing their potential availability for automotive purposes.

U.S. Coal Resources (3.4.1)

- The domestic coal resource base is very large and, per se, will not be the factor that limits the production of synthetic fuels for several decades.

- Western coal resources, recoverable by surface mining, appear best suited economically to the production of alternative fuels.

- The Federal government controls the mineral rights to much of the Western coal. This important part of the resource base cannot be utilized until the coal lands are leased.

U.S. Oil Shale Resources (3.4.2)

- The oil shale resource is very large and very important. However, environmental considerations and other factors such as water availability are likely to limit the rate at which shale oil can be produced.

- Possible production levels during the next several decades are more important than the ultimate "reserves" of shale oil.

- Government leasing policy will be very important since the government holds the mineral rights to about 80% of the richer oil shale properties.

U.S. Petroleum Resources (3.4.3)

- Conventional petroleum supplies for the production of motor fuel are likely to be available from domestic resources beyond the year 2000.

- Production of domestic petroleum is likely to be higher in the 1980's than it is today. Even so, synthetic fuels from other domestic resources will be needed.

U.S. Natural Gas Resources (3.4.4)

- Production of domestic natural gas is also likely to increase, thereby freeing liquid fuels, such as distillate, from stationary uses.

U.S. Nuclear Resources (3.4.5)

- Nuclear electricity capability is behind schedule, and available capacity will be fully required for satisfaction of conventional demands for electricity until about 1985.

- Eventually, nuclear energy may be applied to the production of synthetic fuels and, possibly, in the long run to the production of hydrogen fuel.

Capacity Build-Up (3.5)

- The rate at which resources can be brought into production must be considered as well as the size of the resource base.

- Various constraints on the building of synthetic fuels plants are expected to limit production in 1985 to products containing the energy equivalent of about 3.7×10^{15} BTU/yr. This estimate is for the total of all types of synthetic fuels including what may be used as automotive fuels. By the year 2000, total output could reach 25×10^{15} BTU/yr. These estimates of synthetic fuel supplied are equivalent to 4.2% and 18% respectively of the total U.S. energy demand by final consuming sectors as forecast by the Department of the Interior in 1972.

Criteria for Fuel Selection (3.6)

- Economic criteria include the ex. tax cost of fuel at the pump, the operating cost of the vehicle that would use a particular fuel, and the implied capital requirements of given fuel/vehicle systems.

- Technical criteria include fuel availability, prudence in resource utilization and associated environmental impacts.

- Performance criteria include compatibility (i.e., the suitability of a given fuel for use in a given vehicle), toxicity and safety, efficiency of fuel use, environmental impact in use, and the convenience and acceptability of a given system as perceived by the user (driver).

- Consideration must also be given to the way in which a new fuel could be brought into general use, to interactions with the existing vehicle population and fuel delivery system, and the impact on availability of resources.

Initial List of Fuels (4.1)

- A list of fuels was prepared containing all candidates which could conceivably become viable automotive fuels by 2000.

- The list included (1) coal-derived fuels: gasoline, middle distillate, methanol, higher oxygenated compounds, and hydrogen; (2) shale-derived fuels: gasoline and middle distillate; (3) ethanol by fermentation; (4) hydrogen from water; (5) ammonia from coal or water-based hydrogen, and (6) hydrazine.

Physical and Chemical Properties (4.2)

- A detailed literature search yielded information on the properties of the above fuel candidates, but indicated that many data gaps exist. These gaps reflect the fact that the fuels either have not been available (coal and shale derived hydrocarbons) or have not been completely evaluated in internal combustion engines (methanol, hydrogen, ammonia).

- The physical property data were analyzed in terms of their relation to combustion, storage and handling, automotive maintenance, and "driveability".

Cost of Manufacture and Distribution (4.3)

- The technology for fuel manufacture was reviewed in order to choose a basis for estimating manufacturing economics.

- Published information allowed such estimates to be made. Distribution costs were based on analyzing similarities to, and differences from, the system presently used for petroleum products.

- The following first generation costs (ex. tax, at the pump) were estimated in terms of 1973 $/MMBTU (including a 10% DCF return):

Fuel	Cost
Gasoline from Shale	2.65
Middle Distillate from Shale	2.05
Gasoline from Coal	3.35
Middle Distillate from Coal	2.75
Methanol from Coal	3.85
Methane from Coal	5.65
Oxygenated Compounds from Coal	4.60
Ethanol by Fermentation	7.10
Hydrogen from Coal	9.90
Hydrogen from Water	10.20
Ammonia	7.65
Hydrazine	20+

Fuel-Vehicle Compatibility (4.4)

- A brief assessment was made of the compatibility of the above fuels with various engine types including the conventional Otto cycle, stratified charge, diesel, gas turbine, Stirling, Rankine, and fuel cell.

- The compatibilities range from high (e.g., for coal and shale hydrocarbons in all of the engines) to moderate (e.g., alcohols and methane in Otto cycle engines) to low (e.g., hydrogen in all engines or ammonia in Otto cycle engines).

Environmental Impact (4.5)

- Coal and shale mining will have substantial environmental impacts. In order to keep these to a manageable level, it will be necessary to (1) permanently revegetate spent shale dispersal areas with a minimum amount of water, (2) reclaim surface-mined Western coal lands, (3) plan effectively for the influx of a large number of people into sparsely populated areas.

- Information is very limited on exhaust emissions for the alternate fuels. Coal and shale-derived hydrocarbons are expected to result in emissions similar to petroleum fuels.

Toxicity and Safety (4.6)

- Hydrazine and ammonia are the most toxic of the fuels examined, considering skin penetration, inhalation, and ingestion. Methane and hydrogen are the least toxic. Shale and coal hydrocarbons and alcohols are intermediate.

- Consideration of safety in manufacture, handling, and use indicate that hydrogen, methane, ammonia, and hydrazine present the most serious problems. Shale and coal gasolines, as well as methanol, are safer to handle. Shale and coal distillates and ethanol are the safest of the fuels considered.

Ranking of Fuels (4.7)

- The fuels were ranked using the criteria described in Section 3.5.

- The following five fuels were judged most promising and were examined in detail:

    (1) gasoline from shale
    (2) distillate from shale (as coproduct with gasoline)
    (3) gasoline from coal
    (4) distillate from coal (as coproduct with gasoline)
    (5) methanol from coal

Cost of Automotive Fuels From Shale Oil (5.1)

- Economic estimates were prepared for manufacturing gasoline and distillates from shale using the following sequence:

  (1) mining and crushing.

  (2) retorting, using the TOSCO design based on recycled hot solids.

  (3) upgrading of raw shale oil to high quality syncrude by hydrogenation and coking at the mining site.

  (4) pipelining of syncrude to a refinery.

  (5) refining of syncrude to gasoline and distillates by conventional processes, such as catalytic cracking and reforming.

  (6) distribution of products the same as for petroleum.

- The economics for steps (1), (2), and (3) were adapted from those prepared by the National Petroleum Council (NPC), adjusted to the bases used in this study.

- The following costs in 1973 $, were estimated for the period 1982/1985 (including a 10% DCF return):

  Shale Syncrude: ca. $5.50/Bbl (includes value of lease bonus payment). The sensitivity of syncrude cost to investment level, rate of return, and oil content of shale was calculated, e.g., with a 15% DCF return the syncrude would cost $7.05/Bbl and would result in proportionate increases in gasoline and distillate costs.

  Shale Gasoline: $2.70/MMBTU ex. tax at pump.

  Shale Distillate: $2.10/MMBTU ex. tax at pump.

- The distillate cost is applicable only to a case where distillate and gasoline are co-products in the ratio of ca. 1:2.

- Cost projections were made for the 1982-2000 period allowing for effects of new technology (see Section 5.4).

Cost of Hydrocarbon Fuels From Coal (5.2)

- The cost of gasoline and distillate from coal was based on the following sequence:

  (1) Surface-mining of Western coal.

(2) Hydrogenation at the mine to syncrude using the HRI "H-Coal" process; other processes were considered but were rejected on the basis of insufficient available information; hydrogen was supplied via gasification (Lurgi process).

(3) Pipelining of syncrude to a refinery.

(4) Refining of syncrude to gasoline and distillate by conventional processes, such as hydrocracking and catalytic reforming.

(5) Distribution of products same as for petroleum.

- The following costs were estimated for the period 1982/1985 (1973 $):

  Coal Syncrude: ca. $8.00/Bbl, based on $3/ton coal. The sensitivity of this cost to changes in coal price, investment, and return level was calculated, e.g., with a 15% DCF return and $5/ton coal the syncrude would cost $11.40/Bbl.

  Coal Gasoline: $3.35/MMBTU ex. tax at pump.

  Coal Distillate: $2.75/MMBTU ex. tax at pump.

- As with the shale fuel economics, the distillate/gasoline ratio was ca. 1:2.

- Cost projections for the 1982-2000 period reflected changes in coal price as well as new technology (see Section 5.4).

Cost of Methanol From Coal (5.3)

- The cost of methanol from coal was based on coal gasification with the Lurgi process followed by methanol-synthesis from CO + H_2. This scheme produces methanol and methane (SNG) as co-products. Other gasification processes seem to be less efficient for this application, but information on these alternates was very limited.

- Methanol distribution is significantly different from distributing petroleum products for two reasons:

  (1) if used in a 10-15% gasoline blend, blended at the pump, methanol must be distributed dry to avoid phase instability.

  (2) methanol has about 50% of the energy content of hydrocarbon fuels, which results in higher distribution costs, on a BTU basis.

- The methanol cost at the pump, for the 1982-1985 period, was estimated at $3.85/MMBTU.

- As with the other fuels, cost projections were made for the 1982-2000 period.

Comparison of Costs (5.4)

- From the cost information developed in Sections 5.1-5.3, the following projections were made:

		1982		1990	2000
		$/MMBTU	¢/Gal.	— $/MMBTU —	
Shale:	gasoline	2.65	31.5	2.60	2.15
	distillate	2.05	26.5	2.00	1.65
Coal:	gasoline	3.35	39.5	3.15	2.65
	distillate	2.75	36.5	2.50	2.10
	methanol	3.85	22.0	3.40	2.95

1973 $, ex tax at pump

Due to the many uncertainties in these estimates, ±10% limits on the costs seem reasonable. Nevertheless, relative costs are felt to be fairly reliable.

- Shale-derived fuels are projected to be cheaper than coal-derived fuels over the entire time-frame of the study. The development of shale fuels, however, will not be governed solely by these economics. It will probably be controlled by environmental, manpower, and resource limitations.

- Methanol is slightly more expensive than coal liquids, reflecting the greater contribution of distribution costs for methanol. Methanol would therefore be more attractive in applications such as transportation fleet accounts, or, more generally, in fuel uses other than transportation.

- Distillates are cheaper than gasolines, as long as a prudent refining scheme is used, in which the two are co-products with roughly 30-40% distillate.

- A comparison among these fuels on the basis of capital intensity gives the following:

	$/Barrel/Day		
	Production of Syncrude	Refining	Total
Shale			
Gasoline	6,700	2,000	8,700
Distillate**	6,500	400	6,900
Coal			
Gasoline	11,600	2,600	14,200
Distillate**	12,200	1,300	12,500
Methanol	5,900 (11,800)*		5,900 (11,800)*

* On equivalent BTU basis.
** As co-product with gasoline.

- The relative capital intensities parallel the relative costs at the plant gate.

- Another comparison was made of the relative efficiencies of manufacturing these fuels:

	Energy in Total Product/Total Input Energy	
Auto. Fuel Product:	Gasoline	Gasoline + Distillate
Shale	0.55	0.65
Coal Hydrocarbons	0.65	0.70
Methanol	0.65 (0.55)*	

* If Lurgi process by-products cannot be used as process fuel.

- Efficiencies for producing shale fuels are a little lower than for coal fuels, reflecting losses in shale retorting. Methanol production is less efficient than coal liquefaction unless the gasification by-products can be used as a source of process heat.

User Economics (5.5)

- An attempt was made to compare the cost of owning and operating a vehicle over its life as a function of fuel type. This was done by estimating the effect on vehicle weight and cost due to fuel-connected factors related to compatibility, environmental effects, toxicity and safety.

- Based on reference data for cost and weight of a 1973 model, 3500 lb. vehicle, the following comparison was made for the relative cost of fuel vs. other operating and fixed costs:

10 Year Life, 100,000 Miles

Engine	Fuel	Relative Cost* Fuel	O,M,R,T†	Fixed**	Total
Otto Cycle	Shale Gasoline	1.0	1.2	2.9	5.1
	Coal Gasoline	1.3	1.2	2.9	5.4
	Methanol	1.5	1.2	2.9	5.6
Diesel	Shale Distillate	1.0	2.6	6.5	10.0
	Coal Distillate	1.3	2.7	6.7	10.7
Gas Turbine	Shale Distillate	1.0	1.7	4.1	6.8
	Coal Distillate	1.3	1.7	4.2	7.2
	Methanol	2.0	1.7	4.2	7.9

* Reference point for each engine designated by 1.0 ; comparison among engines not valid.
† Oil, mainenance, repairs, tires.
** Depreciation, insurance, license, and registration.

- The data indicate that, for a given engine type, changes in relative fuel cost are dampened by other costs unrelated to fuel, so that total vehicle operating cost is not changed much.

- Another comparison of relative fuel cost per mile for the three time periods and engine types indicates that these costs parallel the relative ex. tax pump costs. This reflects the assumption that, for the fuels examined, engine efficiency is not a significant function of fuel.

Performance of Gasolines and Distillates From Shale and Coal (6.1)

- High Research octane gasoline fractions based on catalytically reformed coal and shale syncrude fractions will be quite aromatic but no more so than petroleum fractions reformed to the same Research octane level. Comparable data on Motor octanes are generally not available for these synthetic fuels.

- Due to the aromatic nature of coal vs. shale syncrude, naphtha (unreformed) and distillates based mainly on coal will have a higher aromatics content. If, however, the coal-derived fuels are blended either with shale or petroleum fractions, as is likely to be the case, the aromaticities of the blends will be similar to those in current use.

- If gasolines rich in coal-based fractions are used, consideration must be given to factors such as:

    (1) front-end volatility adjustment.

    (2) maximum safe benzene concentration.

    (3) materials of construction of the fuel system.

- It should be possible to make a good quality diesel fuel from shale syncrude. However, more information is needed on cloud point to determine if it should be reduced -- e.g., by the use of additives.

- There are almost no product quality data on distillates from coal. Based on their composition, however, it is likely that such fractions will be deficient in cetane number. If this is confirmed, the options available for correcting the deficiency are: (1) blending with shale or petroleum fractions (the best alternative), (2) use of cetane improvers, or (3) more severe hydrogenation.

- The suitability of coal distillates as a gas turbine fuel has to be determined. High aromaticity could lead to excessive flame luminosity and smoking.

Performance of Methanol and Methanol/Gasoline Blends (6.2)

- Pure methanol could be an attractive motor fuel for an Otto cycle engine, based on its high octane number (106 Research and 92 Motor unleaded). It should be possible to operate at increased compression ratio, leading to improvements in thermal efficiency. However, the vehicle and engine have to be modified to take account of the low volatility, high heat of vaporization, and low heat of combustion of methanol. Methanol should be a very good fuel for continuous combustion engines.

- The use of methanol/gasoline blends brings up a number of potential problem areas:

    (1) Water sensitivity: Methanol/gasoline blends are susceptible to phase separation in the presence of small amounts of water. Unless a cost-effective solution is demonstrated for this problem, it will be necessary to insure that the customer receives a dry blend. The only realistic chance for doing this depends on distributing dry methanol and gasoline separately, and blending at the pump.

    (2) The non-ideality of methanol/hydrocarbon systems results in excessive gasoline vapor pressure in the presence of

5-10% methanol. Unless the automotive fuel system is modified to handle a more volatile blend, methanol addition requires displacing butanes from gasoline, which is economically undesirable.

(3) The use of methanol/gasoline blends results in leaner operation. It is important to determine if such a change causes any driveability problems.

- The use of methanol/gasoline blends could also lead to some practical benefits:

(1) Very limited data suggest some improvement in fuel economy, measured in miles/BTU, by blending 15% methanol into gasoline. More information is required to define fully the extent of such improvements.

(2) Exhaust emissions can be reduced. The emissions data can be rationalized by considering changes in air/fuel ratio. Whether CO, hydrocarbons, or NO_x in the exhaust increase or decrease depends on whether the initial operation is leaner or richer than stoichiometric.

(3) Methanol is expected to have good octane blending characteristics, but more data are needed on blending octanes as a function of gasoline pool octane level.

Evolutionary Considerations (7)

- It is necessary to see an approach path from the present to a new condition in the future.

- Although a given path may be technically possible, it is not likely to be followed if easier or better paths are available.

New Engine/New Fuel Dilemma (7.1)

- Highway vehicles must be able to obtain suitable fuel wherever they are driven. The general public will not purchase a vehicle for which fuel is not readily available. This poses a special problem in the hypothetical case of introduction of new engine and fuel products that are not compatible with existing engines and fuels.

The Compatibility Scenario (7.2)

- Full compatibility of new fuels with existing fuels and engines has numerous advantages. Nationwide distribution of new fuels can evolve as availability increases, and the transition from 100% petroleum to 100% alternative fuels can be accomplished without any discontinuity.

Automotive Fuel Blends (7.3)

- The most likely way that automotive fuels from coal and oil shale will be marketed will be as blends with petroleum fuels and, perhaps, with each other, until the early part of the 21st century.

Automotive Distillate Fuels (7.4)

- There may be both physical limitations and economic penalties associated with increasing the ratio of distillate-type to gasoline-type automotive fuels. This will be examined in an amendment to the contract, and will be covered in a separate report.

- There will be some difficulty in introducing automotive distillate fuels other than automotive diesel. Although an introductory strategy is available, the incentive for using it will depend on the capacity of the new fuels to improve upon the cost and performance of diesel fuel.

Fleet Account Stratagem (7.5)

- New fuels may be introduced to operators of fleets of commercial vehicles. This builds operating experience and defers the problem of how to introduce a new fuel to the general public. The maximum potential of the fleet market is about 5% of total automotive fuel demand.

Automotive Hydrogen (7.6)

- It is very unlikely that the automotive transportation system will evolve of its own accord in the direction of using hydrogen as a fuel for private vehicles before the year 2000.

Labor Force Requirements and Implications (7.7)

- Through 1985, it seems likely that the manpower needed to design and construct synthetic fuel plants will be a limiting factor.

- Longer range, beyond 1990, the balance of natural resources in the Mountain states may be the limitation. Richness in mineral resources may not be adequately matched by water availability for all of the demands, direct and indirect, of a rapidly growing synthetic fuels industry.

Capital Availability and Investment Implications (7.8)

- Capital availability will set investment priorities; unnecessary investments will be avoided. One implication is that the existing distribution and marketing system will not be duplicated to

permit the introduction of fuels not compatible with the existing system -- since new compatible fuels can accomplish the same objective at lower cost.

Research Data Gaps (8.1)

- Research data gaps were classified according to fuel type.

Fuels From Shale Oil (8.1.1)

- The disposal of spent shale in an environmentally acceptable way has to be demonstrated for a commercial-scale operation.

- In situ retorting of shale is very important to large scale growth of shale oil production beyond the 1985-1990 period. An efficient, environmentally acceptable process has to be developed.

- Alternatives should be developed to severe mine-mouth upgrading of raw shale oil to syncrude. One possibility involves mild treatment with heat and/or hydrogen to make it pumpable to a remote refining site.

- A complete spectrum of product quality and engine/vehicle performance data is required, for shale oil gasoline and distillate fractions alone and in blends with petroleum or coal-derived materials.

Hydrocarbon Fuels From Coal (8.1.2)

- The permanent reclamation of surface-mined land has to be demonstrated on a large scale.

- Long range, there is a need for an underground coal liquefaction process, as an alternate to underground mining.

- More efficient methods are needed to generate hydrogen from coal for use in hydrogenation processes.

- Liquefaction processes must be improved to give more selective molecular weight reduction with the minimum hydrogen consumption -- e.g., by developing better catalysts.

- Coal syncrude refining has to be demonstrated with feedstocks from a variety of different coals to give fuel products with acceptable sulfur, nitrogen, and oxygen content.

- The Fischer/Tropsch process could be an interesting candidate for coal liquids if the selectivity and thermal efficiency of the process were substantially improved.

- Complete product quality and performance data are required for coal gasoline and distillate fractions alone or in blends with petroleum or shale-derived materials.

Methanol From Coal (8.1.3)

- Improved coal gasification technology is needed to produce the $CO + H_2$ for methanol synthesis.

- The methanol synthesis reaction could be improved by a more active catalyst (lower temperature and/or pressure) and by the development of selective techniques for separating methanol from unreacted $CO + H_2$.

- With regard to methanol/gasoline blends, complete information is needed on water sensitivity, volatility, corrosion, exhaust emissions, fuel economy and driveability.

- With pure methanol fuel, data are needed on the maximum efficiency improvement possible with various engines, making use of the desirable combustion properties of methanol.

- Methanol is potentially an important fuel cell fuel. Impurity effects have to be defined both for direct fuel cell use and as a feedstock to a reformer for fuel cell hydrogen.

Other Information Gaps (8.2)

- Automotive fuel alternatives must be considered in the context of the economy as a whole.

- The future availability of water in the coal and shale regions of the West requires a careful study. This study should be part of a broader assessment of the the impact of coal and shale mining and conversion industries in sparsely populated areas.

- On-going studies should address the proper utilization of all domestic resources including petroleum.

2. OBJECTIVES OF STUDY AND APPROACH

2.1 Objectives

Almost all of the nation's highway vehicles use petroleum fuels. However, a substantial and growing fraction of the petroleum is imported, thereby making the nation's highway transportation system subject to constraints that would not apply if all of the fuel needed were to be produced from domestic resources. It is questionable whether domestic petroleum alone can ever satisfy the entire demand for transportation fuels as well as the many other demands filled by petroleum products. Certainly, this is not a possibility now, not for many years, and perhaps never. Therefore, the principal objective of this study is to identify feasible and practical alternative fuels (i.e., non-petroleum fuels) that may be derived from domestic sources other than petroleum.

Feasibility means much more than the technical feasibility of producing enough of an alternative fuel to permit some test vehicles to be driven about. Thus, additional objectives of the study are to identify when?, how much?, and at what cost? for each of the alternative fuel possibilities that were not eliminated during preliminary consideration of these and other parameters. Particular attention is paid to the 1985-2000 time-frame for two reasons:

- a significant amount of synthetic fuel manufacturing capacity cannot be in operation much before 1985.

- uncertainty about the validity of basic assumptions increases with time, e.g., the automotive fuel situation in the year 2020 begs the question of whether there will then be automobiles as we know them today. It is the "system" rather than the fuel that becomes the principal variable in the distant future.

Hence, the 1985-2000 time-frame is the period during which it is most reasonable to assume that there may be both a supply of, and demand for, alternative automotive fuels.

The practicality of an alternative fuel relates to the way it would be used by the general public and to any problems that could occur throughout the entire system of distribution, storage, and actual highway performance. Here, the objective of the study is to assess properties such as safety, toxicity, reliability, compatibility with different prime movers, and convenience of use under a wide variety of operating conditions.

A further objective is to identify technology gaps of two different kinds:

- uncertainties about specific and critical aspects of the

processing or performance of the alternative fuels selected for detailed examination.

- areas offering a scientific challenge, such that a breakthrough with new technology could significantly improve the feasibility or practicality of a particular fuel.

A parallel objective is to identify other gaps in information or other factors of apparent consequence to the development of alternative automotive fuels.

Lastly, an objective is to present the results of the study in a way that will facilitate its use and implementation. This requires conciseness and intelligibility, and the finding of a middle ground between oversimplification and excessive detail.

2.2 Approach

Anything that will burn is potentially an automotive fuel. Indeed, dozens of combustible materials have been suggested as automotive fuels. More often than not such suggestions have been made with little regard for cost or practical feasibility.

The first step in this study was to select alternative fuels with a reasonable chance of being feasible and practical within the key 1985-2000 time-frame from the long list of combustible materials that could be used to power vehicles if practicality were not an issue. Cost, potential availability, compatibility with engines likely to be available in 1985, physical properties, safety and toxicity were among the criteria used for screening as discussed in Section 3.6. An unsatisfactory rating on a relative or an absolute basis was sufficient reason for eliminating a given fuel unless there was reason to believe that the deficiency could be overcome within the foreseeable future.

The detailed criteria for selecting (or rejecting) alternative fuels are given later in the report. However, the preliminary screening approach enabled much more time to be devoted to evaluation of the five candidate fuels that were selected than would have been the case if the same total amount of effort had been spent on evaluating a much larger number of possibilities.

The selective approach permitted concentration on cost, availability, and performance which are the factors that will ultimately determine whether a potential alternative fuel reaches the market place in significant quantities and, hence, will have a real impact on the nation's supply of transportation fuels.

The evaluation of cost, availability, and performance required assessment of technology already available or under development and also assessment of apparent gaps that will have to be filled by research.

3. BACKGROUND CONSIDERATIONS

3.1 Introduction

This brief section is dedicated mainly to a summary of some pertinent background information on energy supply/demand, automotive fuel demand, and extent of the resource base. Its location at this particular point in the report is to provide a simple, general framework before turning to a technical/economic analysis of specific alternative fuel candidates.

Most readers may not want to plough through lengthy discussions of background. In order to accommodate them, the treatment in this section of the report is minimal. Others, however, may be very interested in background considerations and may feel (as the contractor does) that the validity of the conclusions depends in large measure on the way that such matters have been recognized and treated in the study. These readers are referred to the Appendices in Volume 3. The Appendices contain two different types of information:

(a) Detailed calculation and analysis that directly support different sections of the text in Volume 2.

(b) Speculations and incomplete analyses that are intended to flag controversial points or issues that cannot be resolved within the scope of this study but may be investigated subsequently.

After the present study was begun, the Environmental Protection Agency issued a Request for Proposal (CI 74-0142 of 2/26/74) titled "Impact Study on the Use of Alternative Fuels for Automotive Transportation". Thus, it is probable that many of the issues touched on in item (b) above will be analyzed in detail in the impact study. Nevertheless, it is necessary to record what was done in the present study, and also to make it clear that the contractor recognizes the incompleteness of such efforts.

3.2 Relationship to Energy Supply/Demand in General

Automotive fuel needs, supplies, and alternatives cannot be adequately assessed in isolation from energy supplies and demands in general. Quantification of the latter is outside the scope of this study, yet a framework is needed so that the calculations and estimates for alternative automotive fuels may be related to broader energy perspectives. A practical, although imperfect, approach to this problem is built on three postulates:

(1) The technical feasibility of alternative automotive fuels may be studied separately from energy supply/demand in general, but the results of the study must be qualified by recognition that the actual development of such automotive fuels will be influenced greatly by what occurs in the entire area of energy supply and use.

(2) Within the practical scope of the alternative automotive fuels study, it is possible only to indicate relationships between such fuels with what may be controlling "externalities"*; quantification of the interactions is not possible.

(3) Plausible projections of some "externalities" can be made, but it should be understood that the purpose is merely to give the reader one frame of reference within which to consider the specific findings of the automotive fuels study.**

3.3 Future Demand for Automotive Fuels

Early in 1974, constrained by the Arab oil embargo, U.S. automotive fuel consumption approximated 6 MMB/D. Currently, with the embargo removed but with some conservation practices in effect, consumption is at least 10% higher. Part of the increase is due to the normal seasonal increase in demand***. The difficulties experienced earlier in the year have encouraged many ideas or proposals concerning ways in which fuel demand may be reduced while still providing adequate transportation services. It is anticipated that evaluation of possible ways of conserving transportation fuel and, thereby, arriving at different levels of future demand will be undertaken in the impact study referred to above. For the present purpose, it is assumed that demand will be in the range of 6 to 12.5 MMB/D during the 1985-2000 time-frame. A rationalization of this assumption is given in Appendix 1. The present purpose is to provide a semiquantitative indication of the size of the target that alternative automotive fuels should address. The lower bound assumed (6 MMB/D) is consistent with a continuation of the present trend to smaller cars combined with other ways of improving efficiency and conserving fuel. The upper bound (12.5 MMB/D) is a judgment of the approximate maximum automotive fuel consumption that will be possible if the U.S. is to achieve the goals of "Project Independence".

---

* The term "exogenous variables" has been avoided since synthetic fuels are expected both to affect and be affected by many other factors, i.e., most of the variables are interdependent rather than being classifiable as independent or dependent.

** Readers are not asked to accept the projections of "externalities" made in this report. Indeed, it is hoped that the study will elicit or lead to alternative and more precise projections. Nevertheless, it does seem necessary to provide a framework that can be used by those readers who do not wish to extend the study.

*** The peak is usually in August.

3.4 Domestic Resource Base

The quantitative potential for manufacturing synthetic fuels from domestic resources depends on the resource base. Four points may be made by way of introduction:

(1) The resource base is the same whether considered from the standpoint of automotive fuels or of energy supplies in general.

(2) With the partial exception of petroleum, domestic energy resources are limited less by their physical extent than by the time and incentives required to develop them and also by environmental and other constraints to such development.

(3) The principal domestic fossil fuel resources are petroleum, coal, and oil shale. Until the end of the century, the principal other sources of energy are nuclear, hydro, and geothermal. Other resources (tidal power, wind power, wood, agricultural waste, garbage, solar energy) are small in extent, limited geographically or logistically, or many years from commercial development. Each has its merits, but none is likely to become a general source of automotive fuels. It is more likely that utilization of such energy sources will lessen the industrial or stationary demand for one or more of the principal resources thereby increasing the potential availability of the latter for automotive uses.

(4) Domestic, as distinct from Canadian, tar sands do not appear to be a promising source of synthetic fuels (3-1, pp. 225-226).

Hence, this review is confined to coal, oil shale, and petroleum (oil and gas) as fossil fuel resources. In addition, nuclear energy is considered because of its potential for (a) substituting for fossil fuels in power generation, etc., and (b) producing hydrogen for use in the manufacture of synthetic fuels or, per se, as a transportation fuel. These fossil fuel and nuclear resources are discussed in Appendix 3; only the briefest of summaries are given in the following subsections. First, however, it is necessary to interject a comment concerning terminology. There is widespread ambiguity in the use, and misuse, of terms such as "resources" and "reserves". Addressing the Eastern Section of the American Association of Petroleum Geologists in April 1974 (3-2), Dr. Thomas V. Falkie, Director of the Bureau of Mines, said that it had been agreed with the Geological Survey that:

> "Reserves are that portion of the identified resource from which a usable mineral or energy commodity can be economically and legally extracted at the time of determination".
>
> "...The definition aims at making it clear that any reserve figure is a dependent variable--dependent on many things including prices and legal restraints of all kinds. In fact, it is so hard to assign fixed values to those controlling variables that any reserve figure is understood to include a 20% margin of uncertainty".

It will be recognized that the qualification of "at the time of determination" presents a special difficulty with respect to projecting the level of reserves in the future. In effect, it is first necessary to quantify all of the legal and economic factors that will affect the recovery of the particular resource throughout the period of the forecast. To date, no one has performed this task successfully. Additional discussion will be found in Appendix 3.

3.4.1 U.S. Coal Resources

(1) The domestic coal resource base is very large.

(2) The potential for Western coal is much larger than implied by official estimates of "reserves" (which are limited to deposits that have been mapped and measured).

(3) Much of the Western coal is recoverable by surface mining.

(4) Most of the coal synthetic fuel plants will be based on Western coal.

(5) Constraints to the development of Western coal resources are environmental, e.g., water availability, the exact requirements of pending surface mining legislation, and the Government's approach to additional leasing of coal lands. Initially, manpower and equipment limitations are also expected to be important.

3.4.2 U.S. Oil Shale Resources

(1) The shale oil resource appears very important in view of its large size. However, other factors are likely to limit the rate at which shale oil can be produced. Such limitations are certain initially and, while potentially removable by new technology (yet to be developed), may remain as a severe constraint for many years. About 80% of the richer oil shale deposits are under Government jurisdiction, hence leasing policy (guided by environmental considerations) will be important. At present, it seems preferable to discuss shale oil from the standpoint of anticipated or possible production levels at various times in the future rather than in terms of "reserves". For example, this study projects that about 400 MB/D of shale syncrude may be produced in 1985.

(2) The significance of the nation's shale oil resources is misrepresented when (in terms of hundreds of billions of barrels) they are claimed to be larger than the proved reserves of petroleum in the Middle East. Ultimate potential should not be confused with the capability that can be developed during the next few decades.

3.4.3 U.S. Petroleum Resources

Domestic petroleum resources are a combination of (a) what has been discovered, and (b) what is estimated to be discoverable in the future. Proved reserves are estimates of the amount of oil already discovered that is economically and technologically recoverable. For obvious

FIGURE 3-1

PLAUSIBLE PROJECTIONS OF U.S. SYNTHETIC FUELS PRODUCTION

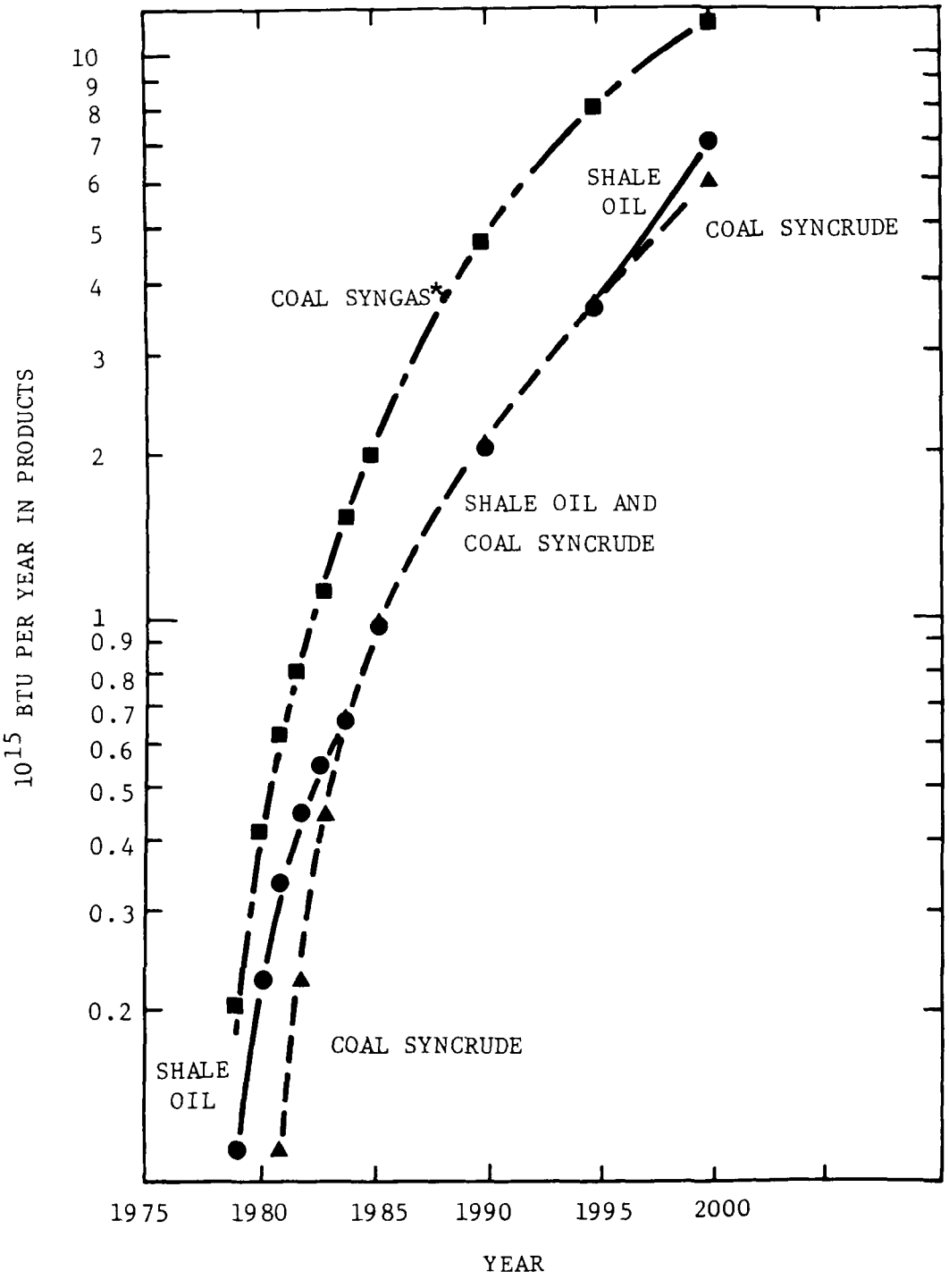

EPA-460/3-74-009

*See p. 28 for methanol equivalent.

reasons, existing proved reserves tend to decline as production continues. Whether production increases, remains the same, or decreases in the future will depend on the rate at which new oil is discovered. In turn, the discovery rate will depend on a combination of technological/geological and other factors of considerable political and economic complexity. The recent trend in domestic production has been downward, but there are reasons for expecting that a reversal will occur soon and that the level of production in the 1980's will be higher than it is today.

From a resource standpoint, domestic petroleum is likely to be available through the first quarter of the 21st century and, hence, potentially available for automotive use during most of this period. Thus a probability of significant, even if declining, availability through the year 2000 is high.

3.4.4 U.S. Natural Gas Resources

Domestic natural gas resources parallel liquid petroleum resources in extent and with respect to the factors that affect leasing of acreage, exploration, discovery, production, etc.

Natural gas can substitute for petroleum liquids in most stationary uses of fuel, thereby affecting the availability of liquid fuels for non-stationary uses. In addition, natural gas is the source of gas liquids (NGL) including natural gasoline.

3.4.5 U.S. Nuclear Energy Resources

Technologically, nuclear energy has the potential for replacing fossil fuel energy in most stationary uses. However, actual replacement will depend on the rate that nuclear capability is developed. The resource base appears adequate to support foreseeable energy demand during the next century and probably beyond. On the other hand, the long lead-time associated with bringing nuclear capability on line makes it unlikely that such capacity will be available for application to the production of synthetic or alternative fuels before the mid-1980's. By the year 2000, the impact may be appreciable and growing fast. However, the complete displacement of fossil fuels by nuclear energy is not a feasible scenario until well into the 21st century.

3.5 Build-up of Synthetic Fuels Capacity

Quantitatively, the manufacture of synthetic fuels is expected to depend far more on the rate at which resources can be brought into production than on the size of the resource base--which is very large.

It is outside the scope of this study to predict the extent to which the synthetic fuels that are produced will be used for automotive purposes. However, the projections in Figure 3-1 may be taken as an indication of the upper limit of such use until the year 2000. The hypothetical upper limit will be set by the total quantity of synthetic fuels

that can be produced. The limit for automotive fuels will be some fraction of this quantity.

The shape of the shale syncrude curve in Figure 3-1 reflects the concept that shale oil development is likely to occur in phases: (a) the prototype leasing program and associated developments on privately held acreage, (b) further leasing of shale lands by the D.O.I. if the prototype program proves to be environmentally acceptable, and (c) commercialization of in situ technology by about 1990. The latter technology is still at a very early stage of development. Hence, there is considerable uncertainty about the projection of the shale oil curve beyond the approximate level of 2×10^{15} BTU/yr.* If shale oil production were to be severely constrained, it is possible that greater effort would be applied to the production of synthetic fuels from coal.

Arithmetically, the 1×10^{15} BTU point on the coal syngas curve corresponds to 900 MB/D or 46 MM tons/yr. of methanol.** However, until the domestic shortage of natural gas is alleviated, it seems likely that gasification plants will emphasize the production of SNG rather than methanol. This does not mean that methanol will not be produced, but rather that the level of production will be much less than the upper limit implied by the syngas curve in Figure 3-1.

The synthetic fuels industry will be only a part of a much larger whole. Hence, any factors that have a major impact on any aspect of energy supply and demand are also likely to have a direct or indirect impact on synthetic fuels and alternative automotive fuels.

3.6 Criteria for Fuel Selection

Criteria for fuel selection were considered at two different stages of the study: first in narrowing down the original list of fuels to the most promising candidates for further analysis and, second, to assess these remaining fuels in more detail. Following is a list of the criteria which were used in the study along with some explanatory comments.

3.6.1 Economic Criteria

(1) Cost, ex. tax at the pump.

This is the most direct criterion for comparison although not easy to calculate. It includes costs of producing the resource, manufacturing the fuel, and distributing it to the customer. As discussed in Sections 4 and 5 of the report, costs estimated in the screening study usually are revised upon more detailed analysis. There is also an obvious effect of time, as new and improved technology becomes available. For the

---

* 2.2×10^{15} BTU/yr. is approximately equivalent to 1 MMB/D of shale syncrude.

** The basis of this conversion is explained in Section 5.3. It assumes maximum conversion of syngas to methanol.

initial screening, a single time period was considered reflecting mature technology for the manufacture of each fuel. In the detailed consideration of selected fuels, an effort was made to project changes in costs through the year 2000.

(2) Operating cost of the vehicle.

It is important to consider the cost of the fuel from the point of view of the consumer. In this study this was dealt with in a very perfunctory manner in the initial screening and in somewhat more detail in the subsequent analysis. In order to do a meaningful comparison of this type, it is necessary to have fairly reliable fuel economics and an appreciation of the fuel/vehicle interactions. The latter is important to make sure that all the significant effects on vehicle weight and cost due to the fuel are considered.

(3) Capital requirements.

The energy sector of the U.S. economy will require tremendously large quantities of capital in the future. The manufacture of alternative transportation fuels is very capital intensive. Different fuels, however, vary in the distribution of capital intensivity in going from the resource in the ground to the fuel at the pump. It was decided in the study to defer comparison of capital requirements until the most promising fuel candidates had been identified.

3.6.2 Technical Criteria

(1) Technological status, fuel availability.

It is critical to determine when various alternative fuels can be made generally available. In order to do this, the technology of manufacturing these fuels has to be assessed. This assessment also leads to a definition of technology gaps. The rate at which these can be filled is important in determining the relative attractiveness of various fuels at a given point in the future.

(2) Efficiency of resource utilization.

Resources must be used prudently in order to prevent undue depletion. The overall efficiency of resource utilization comprises a number of steps including production of the resource, manufacture and distribution of the fuel, and use of the fuel. The last of these is dealt with below as part of another criterion. Resource utilization was considered in the first round screening only if very serious problems were foreseen for certain fuels. Efficiency of utilization was calculated for selected fuels in the second part of the study.

(3) Environmental impact.

Protection of the environment is a paramount consideration for any system of fuel manufacture and use. As in (2) above, environmental considerations come into play in manufacture, distribution, and use. Important potential problems were identified in the first round, with detailed consideration left for the second phase.

3.6.3 Performance Criteria

(1) Compatibility.

The issue of fuel-vehicle compatibility is an extremely complex one and cannot really be dealt with adequately within the scope of this contract. In the initial assessment, a qualitative list was prepared of the modifications required to the engine and the vehicle in order to handle a given alternative fuel. This analysis considered internal combustion engines, diesel engines, as well as gas turbines and external combustion engines. In the second phase of the study, the effect of specific properties of selected fuels on engine and vehicle performance was considered.

(2) Toxicity and safety.

These factors were considered in the initial screening, and in more detail in the subsequent assessment.

(3) Efficiency of use.

An attempt was made to quantify the efficiency of fuel use in various engines to allow some discrimination among the candidate fuels in the initial list. For a given engine, efficiency is measured by fuel economy, which determines the fuel component of vehicle operating cost. As mentioned in (2) under 3.4.1, this analysis was carried out for selected fuels.

(4) Environmental impact in use.

This criterion deals with the problems of exhaust emissions and vehicle noise. For the initial screening, those fuels are identified and debited which are expected to lead to major problems in these areas. In the detailed analysis, potential problem areas were analyzed, including the economic and technical implications of possible solutions.

(5) Driver acceptability and convenience.

This criterion is very important because, in the final analysis, the driver rates the fuel-vehicle system on the basis of its performance. Factors such as stalling, cold starting, acceleration, frequency of maintenance, etc., are related to properties of the fuel and the performance of the engine. As with the above criteria, a simple subjective rating was considered in the initial screening with a more careful analysis in the second phase of the study.

3.6.4 Strategic Criteria

(1) Vehicle shift compatibility and entry strategy.

This criterion considers how a new fuel would be brought into general use. The ease with which this transition can be made depends on the compatibility of the fuel with both existing fuels and engines. A qualitative ranking is given on this basis in the initial screening. A detailed appraisal for the preferred fuels includes estimates of capacity buildup and the feasibility of using blends of the fuel with existing fuels.

(2) Resource availability.

The feasibility of different fuels depends on the availability of the resources required for their production (as indicated in Section 3.4). Various types of constraints were considered: land and water availability; environmental impacts; capital, manpower and materials limitations.

4. SELECTION OF FUELS FOR IN-DEPTH ANALYSIS

4.1 Initial List of Fuels

The following group of fuels was selected for initial consideration:

1. Coal derived fuels:

   - Gasoline
   - Middle Distillate*
   - Methanol
   - Oxygenated Compounds
   - Hydrogen

2. Shale derived fuels:

   - Gasoline
   - Middle Distillate

3. Ethanol via fermentation of plant products
4. Hydrogen from water by electrolysis
5. Ammonia using hydrogen from coal or water electrolysis
6. Hydrazine from ammonia

It would have been possible to make the above list substantially larger by including a variety of materials that could conceivably be burned in present or projected automotive power plants. However, the judgment was made that the initial list be restricted to a manageable number by considering only those fuels whose general properties and potential availability might make them viable candidates to supply a substantial fraction of the automotive fuel demand. By this criterion, hydrazine is a questionable candidate simply because of the lack of a large-scale synthesis process, as will be mentioned later. It was included because of its potential use in fuel cells.

Also, the list avoids duplication of the same fuels from different sources where this does not seem practical. For example, methanol can be made by fermentation, starting from carbohydrates, or by the destructive distillation of wood. However, the most cursory analysis quickly indicates that neither of these methods can reasonably compete with a large-scale production based on coal. Similarly, it is possible to derive either hydrogen or methanol from shale oil. In this case, it would be very wasteful to convert the shale oil to carbon monoxide and hydrogen, the necessary first step in such a process. On the other hand, this concept is compatible with the projected utilization of coal, where gasification to CO and hydrogen, and then to methane, is already being developed.

* The glossary at the end of this volume defines a large number of the specialized terms, abbreviations, etc., used in this report.

Another example involves ethanol from coal via hydration of ethylene made in coal pyrolysis or Fischer/Tropsch synthesis from CO + H_2. Coal conversion processes are best utilized in preparing mixtures of oxygenated compounds, which are already on the list. Fermentation was chosen as the preferred route to reasonably pure ethanol.

In the following discussion, the properties of these fuels, as well as an estimate of their costs, are compared to allow selection of the most promising candidates for detailed consideration.

4.2 Physical and Chemical Properties

Experience has shown that many physical and chemical properties of a fuel influence its performance in the engine, acceptability to the customer, impact on the environment, and methods of handling and distribution.

In the eyes of the driver, the ideal fuel should permit easy engine starting at all ambient temperatures, give rapid warm-up and acceleration, provide quiet trouble-free operation, have good fuel economy and adequate range between refuelings, keep engine and car maintenance to a minimum, not be unduly hazardous and, of course, be inexpensive. Neither the fuel nor the exhaust should have an objectionable odor. As mentioned in Section 3.6, environmental impact involves fuel emissions encountered in handling, storage, and refueling, as well as the nature and composition of the exhaust emissions. Storage and handling considerations also require that large volumes of the fuel be contained without serious deterioration or loss for periods up to six months or longer, to move it through pipes, and/or in tankers, barges and tank trucks, and to dispense and meter it to individual vehicles quickly. This must be done safely, without serious environmental damage and without significant contamination with water, rust, or dirt.

A discussion of the significance of various fuel properties is given in Appendix 6.* It is evident that the properties of the fuel have an impact on all the criteria mentioned in Section 3.6. The interrelationship is summarized in Table 4-1. It served as the general basis for categorizing the property data collected in this study. For example, Tables 4-2 to 4-5 list fuel properties related to combustion behavior, handling and storage, and automotive maintenance. These tables show properties for the fuels listed in Section 4.1, and also give typical values for petroleum gasolines and distillates for comparison. In quite a few instances, where data were not available, estimates were made, identified by parentheses around the value.

4.2.1 Combustion Properties

A number of significant observations can be made regarding the combustion properties of the fuels shown in Table 4-2.

* Appendices are found in Volume III.

TABLE 4-1

RELATION OF FUEL PROPERTIES AND FUNCTIONS

CRITERION OR FUNCTION →	Distribution	Fuel Storage(p)	Automotive Behavior: Fuel Economy				Automotive Behavior: Engine Maintenance & Service				Automotive Behavior: Driveability				Environmental Impact	Safety	Compatibility with Conv. Fuels
Engine Type(a) →	A	A	Otto	Dies.	C.C.	F.C.	Otto	Dies.	C.C.	F.C.	Otto	Dies.	C.C.	F.C.	A	A	A
FUEL PROPERTY ↓																	
Volatility																	
Initial Boil. Pt.											H						
50% Dist @											H	H	M				M
90% Dist @							M	H	M			H	M				
Final Boil. Pt.							H	H	M				M				
Vapor Press.(c)	H	H									H	H	H	H	H	H	H
Density	M	H															M
Heat of Comb., BTU/gal			H	H	H	H						M					
Octane No.(d)			H				H				H						M
Cetane No.(c)												H					M
Viscosity @ 100°F										(n)		H	H				M
Ash							H	H	H	(n)					H		M
Sodium(d)								H	H								
Vanadium(d)								M	H								
Pour Point(d)	M	M									H	H	H	H			M
Carbon Residue							M	M	M	(n)					M		
Flame Speed(i)											M	M	M			M	
Sulfur							M	M		(n)					H		M
Corrosivity(e)	M	M					H	H	H	H						M	H
Effect on Plastics(e)	M	M					H	H	H	H						M	H
Exhaust Emissions(f)															H	H	H
Nitrogen										(n)					H		H
Fuel Odor	M	M													M	M	M
Toxicity(g)	H	H													H	H	H
Flash Point	H	H														H	M
Viscosity @ 0°F	M	M															M
Solubility in Water(h)	M	M	M	M	M	M				(n)				(n)			H
Solubility For Water(h)	M	M					M	M	M	M	M	M	M	M			H
Emulsion Tendency(h)	M	M					M	M	M	M				(n)			M
Storage Stability	M	H					M	M	M	M							M
Sludge Tendency	M	M					H	H		(n)							M
Lubricity(j)	M							M	M	(n)							M
Static Charge	H	M														H	H
Flammability Limits(i)	M	H									M	M	M			H	M
Electrochem. React.						H				H				H			
Heat of Vaporization											M						

Footnotes:

(a) A All engines
C.C. Continuous combustion engine (i.e., gas turbine, Rankine, Stirling)
F.C. Fuel Cell

(b) Code - H Highly important
M - Moderately important

A blank space means property is not important for the particular function.

(c) It is assumed the car fuel system will be designed to handle the fuel, i.e., avoid excessive vapor losses or vapor lock.
(d) Can be improved by additives. However in some cases (e.g., tetraethyl lead) these may contribute to air pollution.
(e) Problems can probably be minimized by judicious selection of fuel system materials.
(f) Includes unburned fuel (e.g., hydrocarbons), CO, NO_x, smoke, particulates, polynuclear aromatics, odor.
(g) Includes vapor, ingestion, skin. Can probably be mitigated by proper design of equipment and suitable precautions.
(h) Problems may be alleviated by proper design of fuel handling, and storage systems.
(i) Fairly wide range can probably be utilized by suitable adjustment and modification of the engine.
(j) Problems can be alleviated by proper selection of pumps, controls, etc. Fuel properties may be adjusted by use of proper additives.
(n) The fuel cell is in such an early state of development, it is not possible to define the fuel requirements with any certainty.
(p) Includes storage on vehicle.

EPA-460/3-74-009

TABLE 4-2

FUEL CHARACTERISTICS RELATED TO COMBUSTION BEHAVIOR[f]

Fuel→ / Property↓	Hydrogen	Methane	Ammonia	Hydrazine	Methanol	Ethanol	High Oxyg.[c]	Coal		Shale		Petroleum	
								Gasol.	Distill.	Gasol.[d]	Distill.[e]	Gasol.	Distill.
Volatility (Boiling Point)													
Initial Boil. Pt. °F	—	--	--	--	--	--	(149)	100	400	148	350	100	375
50% off @ °F	-423	-259	-28	236	149	173		270		285		210	500
90% off @ °F	--	--	--	--	--	--		360		340		330	580
Final Boil. Pt. °F	--	--	--	--	--	--	(300)	400	600	411	550	400	620
Vapor Pressure @ 100°F, psi			212	0.28[a]	4.6	0.28[b]	(1)		(0.01)		(0.01)	8-12	0.01
Heat of Vap. BTU/Lb @ Normal Boil. Pt.	194	219	591	540	474	360	(350)	(150)	(110)	(150)	(110)	(150)	(110)
Heat of Combustion (Net)													
BTU/lb	51,600	21,500	8,060	7,294	8,640	11,550	(11,500)	(18,200)	(17,900)	(18,200)	(18,300)	18,650	18,400
BTU/gal	30,600	80,000	31,000	61,000	57,370	76,000	(76,000)	(114,000)	(133,000)	(114,000)	(129,000)	113,500	129,400
Stoichiometric Mix													
# Air/# Fuel	34.6	17.3	6.1	4.3	6.5	9.0	(9.0)	(13.9)	(13.5)	(14.8)	(14.5)	(14.8)	(14.5)
BTU/ft^3 @ STP	85.2	90.9	83.5	104	95	97	(97)	(105)	(101)	(100)	(102)	100	102
Vol. air/vol.fuel	2.38	9.53	3.57	4.76	7.14	14.3		(50)	(101)	(55)	(105)	57	107
Octane No. (No Antiknock Add.)													
Research		130	130		106	106	(105)	82-98	--	35-91	—	86-93	—
Motor		105			92	89	(90)	(75-86)	--	(?-82)	—	72-84	--
Cetane No.		<0	<0		(10)	(15)	(15)	(0-5)	(40)	(12)	(40-45)	(0-5)	48
Auto Ignition Temp.°F	1085	1004	1204		878	738	(800)			(900)	(500)	800-950	500
Max. Flame Speed, ft/sec	8.7	1.12	0.034		1.6			(1.1)	(1.1)	(1.1)	(1.1)	(1.1)	(1.1)
Flammable Limits, Vol %													
Upper	74	15.4	25	100	37	19		(8)		(8)		8	
Lower	4.1	5.0	16	4.7	6.0	3.5		(1)		(1)		1	
Kinematic Vis.,77°F,cs				0.89	0.64	1.39	(1.5)	(0.5)	(3.0)	(0.5)	(3.0)	0.5	3.0
References (Section 4-)	2,11, 12,17	15,24, 27,29 30,31	1,2,8, 9,12, 14	37,39	11,12, 41,44 45	11,20 42,44		61,62, 122,123, 124,125 126,127 128	122	59,95, 108	60, 108	12,67, 68	12,66

Footnotes:

(a) @ 77°F.

(b) @ 68°F.

(c) Estimated on basis Fischer/Tropsch oxygenated compounds will consist essentially of 50% ethanol, 20% methanol, 20% propanol and 10% C_4 + oxygenates.

(d) From catalytic reforming of hydrogenated naphtha from shale oil.

(e) From hydrogenating crude in situ shale oil.

(f) Blank spaces indicate absence of data.
Dash indicates data inconsequential.
( ) indicates estimated values.

1. The low boiling points of hydrogen, methane and ammonia indicate that special equipment will be required to store and handle these materials. Storage could be either as cryogenic liquids or pressurized gases. In either case, there are serious problems in adapting these fuels to a vehicle. This problem is discussed further below.

2. The relatively low volumetric heat of combustion (BTU/gal.) of the alcohols, hydrazine, ammonia, methane, and hydrogen is a significant disadvantage, in that it will require the storage of relatively large volumes of these fuels to provide an adequate cruising range for the vehicle.

3. The relatively high heat of vaporization of the alcohols, hydrazine, liquid ammonia, liquid methane, and liquid hydrogen, combined with their low heat content, means that with a carburetted engine, special pains must be taken to transfer adequate heat to the intake manifold to vaporize the fuel. For example, it takes eight times as much heat to provide the same amount of combustion energy in the vapor form with ammonia as with a conventional gasoline. This is usually waste heat from the engine (in exhaust or water) and represents no thermal penalty to the engine. This heat exchange problem can be avoided by injecting the liquid fuel directly into the combustion chamber. However, fuel injection involves additional cost.

4. The BTU/ft.^{3} of a stoichiometric fuel/air mixture relates to the amount of energy that can be inducted into the combustion chamber of a carburetted reciprocating piston engine of a given displacement. The higher this figure, the more power can be produced from a given displacement engine at a given engine speed. This assumes that each fuel is being burned with an amount of air theoretically required for complete combustion.

5. The high octane numbers of ammonia, methane, and methanol are noteworthy. With such fuels it should be possible to design an Otto cycle engine (high compression ratio) that would have a higher thermal efficiency than would be possible with the lower octane number fuels. However, this point will have to be demonstrated with ammonia and methanol, in view of the hazards of translating experience based on high octane hydrocarbon fuels to widely different compounds.

6. Apparently the combustion characteristics of hydrogen are such as to make a rating by the accepted anti-knock methods difficult since no octane numbers have been published. Single-cylinder engine combustion studies have indicated (4-17), however, that hydrogen can be burned in an Otto cycle engine without knock over a compression ratio range from 6:1 to 16:1 by careful adjustment of spark advance and air/fuel ratio. At a given compression ratio, say 8:1, combustion behavior varies as the amount of hydrogen in the air is increased. For example, a mixture containing less than 0.73 wt. % hydrogen is too lean to burn and misfire results. Between 0.73 and 1.5 wt. % hydrogen, satisfactory knock-free operation is achieved. As the amount of hydrogen is increased

above 1.5 wt. %, knock is encountered and continues until the hydrogen reaches 16 wt. %. From here to the upper flammability limit (25 wt. %) knock-free operation is again experienced. It should be noted that above a hydrogen concentration of 2.81 wt. % (stoichiometric mixture) hydrogen combustion will be incomplete because of insufficient air. Thus, the feasible knock-free fuel/air operating range at 8:1 compression ratio, according to these data, is in the range of 0.73 to 1.5 wt. %. At 16:1 compression ratio, this knock-free "operating window" ranges from 0.75 to 1.0 wt. % hydrogen. Evidently, it will require closer fuel/air ratio control to operate knock-free with hydrogen at high compression ratios than at low. However, there is some question about the validity of these results since knock-free operation over a wide range of fuel/air ratio has also been reported (4-48,101). Problems of preignition (4-22) and backfire (4-55) with hydrogen have also been reported. Exhaust gas recycle has been used to modify and control the combustion of hydrogen in an Otto cycle engine (4-55).

7. The Cetane Number of all the fuels in Table 4-2, except for the distillates from petroleum, shale, or coal, are too low to make them attractive as fuels for an engine operating on the compression ignition principle. The use of cetane-improving additives, supplementary sources of ignition (e.g., a glow plug, pilot-injection, or spark plug), blends with high-cetane number fractions, or the use of exceptionally high compression ratios (say 22:1) would probably circumvent this problem in some cases.

8. The high flame speed of hydrogen and the low flame speed of ammonia are noteworthy. They imply that the optimum engine operating conditions or design for these fuels will be different than for the more conventional hydrocarbon fuels.

9. The exceptionally wide flammability limits of hydrogen are significant. This is the basis of the "Hydrogen Induction Technique" (4-48,101) method of engine (Otto cycle) operation in which the engine power is varied by varying hydrogen-air ratio and not by throttling the fuel/air mixture. In the Hydrogen Induction Technique the amount of air taken into the combustion chamber on each piston stroke is held constant (no air throttling) while the amount of hydrogen inducted is increased for increased power. Higher efficiency is claimed for this method of operation (4-48). Unfortunately, the wide flammability limits adds to the hazard of using hydrogen as an automotive fuel.

4.2.2 Vehicular Storage Requirements of Fuels

As pointed out above, the low boiling points of ammonia, methane, and hydrogen present a problem with regard to the storage of these fuels in an automobile. The magnitude of this problem is illustrated in Table 4-3 comparing the weight and volume of the tank and fuel required to store 2.27×10^6 BTU combustion energy (equivalent to 20 gallons of gasoline) with the various fuels under consideration.

TABLE 4-3

VEHICULAR STORAGE REQUIREMENTS OF FUELS[a]

Basis: Energy Equivalent of 20 gals. gasoline[d]
(2.27×10^6 BTU)

	Fuel Alone		Fuel + Container	
	lbs.	$ft.^3$	lbs.	$ft.^3$
Gasoline[b]	119	2.59	134	2.76
#2 Diesel Fuel[c]	120	2.28	134	2.50
H_2(g) @ 3000 psi, 80°F	43.9	40.6	2250*	66*
H_2(l) @ 1 atmos.	43.9	10.2	353*	10.2*
H_2 as MgH_2[e]	577	6.6	692*(f)	10.8*(f)
Methane(g) @ 3000 psi, 80°F	105.5	12.40	500	27.6
Methane(l) @ 1 atmos.	105.5	4.06	240	16.1
Ammonia(l) @ 80°F	284	7.16	455	13.4
Hydrazine	338	5.40	367	6.05
Methanol	261	5.26	285	5.70
Ethanol	195	3.95	214	4.78
Higher Oxy. Compounds[g]	200	4	220	5

(a) Based on data from (4-26) except for figures marked (*) which are from (4-70).

(b) This assumed to apply to all gasolines whether from petroleum, coal or shale.

(c) This assumed to apply to all distillate fuels whether from petroleum, coal or shale.

(d) On an equal mileage basis (say 270 miles) the fuel storage requirements must be adjusted for the thermal efficiency of the vehicle. In the case of diesel power the above figures would be reduced by 1/3.

(e) Assumes theoretical yield of H_2, density MgH_2 1.4 gms/ml. (4-58).

(f) Does not include heat exchange means and ancillary equipment to charge and discharge MgH_2.

(g) Estimated on basis that Fischer/Tropsch Oxygenated compounds will consist of about 50% ethanol, 20% methanol, 20% propanol and about 10% C_4 + alcohols (4-53).

In automobiles using gasoline or distillate fuels, the fuel and container will weight 134 lbs. and occupy 2.5-2.8 cubic feet. Oxygenated fuels (i.e., methanol, ethanol, and higher oxy compounds) require heavier and bulkier fuel storage systems, averaging twice as large and heavy as for gasoline, because of their lower heat content.

Storage problems become more severe with the gaseous fuels. Ammonia stored as a liquid will require relatively large and heavy tanks to hold the pressure. With methane and hydrogen, storage as a gas under pressure (e.g., 3000 psi) requires tanks weighing 370 and 2000 lbs. more than current automotive practice. The 2000 lb. increase is prohibitive for automotive use.

Methane and hydrogen may also be stored as cryogenic liquids at atmospheric pressure. This reduces the weight debits (which, however, are still severe, i.e., 100 lbs. and 220 lbs., respectively) but causes other problems, e.g., cost of the cryogenic storage containers, fuel losses due to evaporation, and the requirement for safe venting provisions while the vehicle is in the garage.

The practicability of using hydrogen as an automotive fuel, and to a lesser extent methane, will depend on solving the vehicular fuel storage problem. In this connection the use of metallic hydrides (4-70) is receiving considerable attention. As noted in Table 4-3, storing hydrogen as MgH_2 brings the problem to more manageable proportions. The weight penalty, however, is still 550 lbs. without considering the heat exchange means and ancillary equipment required to discharge the hydrogen from the hydride. Magnesium hydride, however, is probably too stable for automotive applications. Hydrides currently being studied, such as iron titanium hydride, have a lower capacity.

If fuel storage requirements are considered on the basis of equal miles (say 270 miles per tankfull) rather than an equal heat content, the thermal efficiency (fuel economy) of the vehicle must be considered. The following is a comparison of the thermal efficiencies recently reported (4-71) for several power plants over the Federal Driving Cycle. It is important to point out that efficiency and relative fuel consumption comparisons are valid only for vehicles operating under similar power-to-weight ratios. As a first approximation, however, the efficiency data below can be used to estimate relative fuel storage requirements on an equal mileage basis:

Thermal Efficiency Over the Federal Driving Cycle (4-71)

Power Plants	Thermal Efficiency (%)	Thermal Efficiency Relative to I.C.E.**
1973 Internal Combustion Engine (ICE) (Avg.)	9.5	1.00
Wankel (Mazda)	7.0	0.74
Dual-Chamber Stratified Charge (Honda)	8.0	0.85
Stratified Charge (Texaco)	8.7	0.92
Stratified Charge (Ford)	11.2	1.18
Diesel (Mercedes Benz)	16.5	1.72
ICE - Hydrogen Induct. Technique	14 est.*	1.45 est.*

* From data in (4-48).
** Inverse of relative fuel consumption.

4.2.3 Bulk Handling and Storage of Fuels

Table 4-4 lists the characteristics related to the handling and bulk storage of the fuels. Following are some observations regarding this table:

1. The high freezing point of hydrazine (36°F) indicates that special means would be required to keep it liquid in automotive and storage tanks in many areas of the United States at various times of the year. One solution to this problem may be to use it mixed with unsymmetrical dimethyl hydrazines (freezing point ca. -71°F).

2. The water-miscibility of hydrazine, methyl alcohol and ethyl alcohol indicates that the storage and transportation system handling these fuels would have to be kept dry, to avoid problems such as fuel instability, corrosion, etc., which could affect performance.

3. There are water sensitivity problems with handling and storing alcohol-hydrocarbon blends, particularly with methanol. Such blends can separate into two phases when only a few tenths of one percent of water is added. This issue is considered in detail in Section 6.3. Since water can condense in the fuel tank by diurnal "breathing," special venting of the vehicle's storage tanks or the use of adsorbent canisters would be required where gasoline-alcohol blends are used. It will also be necessary to keep water out of the fuel transportation and storage systems.

TABLE 4-4

FUEL PROPERTIES RELATED TO HANDLING AND STORAGE OF FUELS[m]

Property \ Fuel	Hydrogen	Methane	Ammonia	Hydrazine	Methanol	Ethanol	Higher Oxy	Coal Gasol.	Coal Distill.	Shale Gasol.	Shale Distill.	Petroleum Gasol.	Petroleum Distill.
Vapor Press, psi @ 100°F	(i)	(i)	212	0.28[a]	4.6	0.28[b]	(0.3)[b]		(0.01)		(0.01)	8-12	0.01
Density													
Liquid @ 60°F, lbs/ft³	4.43[c]	27.9[c]	48.1[c]	62.6	49.7	49.3	(49.5)	(47)	(55)	(47)	(54-55)	46.0	52.6
Liquid, °API @ 60°F				(1.9)	(45.7)	(47.0)	(46.2)	(57)	(28)	(57)	(30-35)	60	36
Kin. Viscos. cs @ 0°F				1.2[d]				(1.0)	(4.5)	(1.0)	(4.5)	(1.0)	(4.5)
Freezing or Pour Point, °F	-435	-296	-108	35.6[n]	-142	-179	(-170)				20	<-40	-20+5
Flash Point °F (Closed Cup)	--	--	--	126[e]	52[e]	65[e]		(-40)	148	(-40)	(125)	-40	125
Sol. in Water @ 68°F Wt %			33.1	infinite	infinite	infinite						Nil	Nil
Sol. for Water @ 68°F, ppm				infinite	infinite	infinite						0.02	
Emulsion Tendency	(NP)	(NP)	(NP)									NP[f]	NP[f]
Storage Stability	NP	NP		NP								NP[f]	NP[f]
Static Charge				D	(LD)[g]	(LD)[g]	(LD)[g]	(D)	(D)	(D)	(D)	D	D
Toxicity													
Vapor	None[h]	None[h]	Hi	Hi	Mod.	Low	Mod	(Sig)	(Sig)	(Sig)	(Low)	(Sig)	(Low)
Ingestion				Mod	Mod	Mod	Mod	(Sig)	(Sig)	(Low)	(Low)	(Low)	(Low)
Skin				Hi	Low	Low	Low	(Sig)	(Sig)	(Low)	(Low)	(Low)	(Low)
Lubricity		NP						(NP)	(NP)	(NP)	(NP)	NP	NP
Corrosivity			(l)	(k)			(j)					NP	NP
Effect on Plastics	See Table 4-5												
References (Section 4-)	11,15	20	8,9, 10,13, 15	37,40	11,41 45	11,20, 42.						12,67, 68	I2,66

Footnotes to Table 4-3:

(a) at 77°F

(b) at 68°F

(c) at normal boiling point

(d) at 41°F

(e) Open cup

(f) Can be controlled by careful refining and aided by additives.

(g) Specific electric conductivity 10^6 times higher than hydrocarbons.

(h) Asphixiant

(i) Above critical temperature

(j) May contain small amounts of organic acids which may corrode certain materials.

(k) Material to be avoided include cobalt, copper, pure iron, lead, manganese, magnesium, tin and zinc.

(l) Corrodes copper, brass and zinc.

(m) Code: NP - no problem
D - danger
LD - less danger than petroleum hydrocarbons
Blank spaces - data unavailable
( ) - estimated data.
Sig = significant

EPA-460/3-74-009

(n) It might be possible to avoid this high freezing point by using a mixture of hydrazine and unsymetrical dimethyl hydrazine.

4. The danger from explosions or fires set by static electric discharges generated in the handling of hydrogen, methane and ammonia is understood to be low. Static electric generation is a maximum with materials whose conductivities are in the range of 10^{14}-10^{18} ohm centimeters. The conductivities of liquid methane and liquid hydrogen are below this range. The conductivity of liquid ammonia is above this range.

5. It will probably be more hazardous to handle ammonia and hydrazine than petroleum fuels. The primary hazard with ammonia is from inhalation. With hydrazine both inhalation and skin contact must be avoided. With liquefied ammonia, hydrogen, and methane, skin contact with the cold liquids must obviously be avoided.

6. The indications are that the coal liquids will probably contain a high concentration of aromatic hydrocarbons. It appears also that the benzene content may be appreciably higher than gasolines from petroleum sources (1-5 vol. %)*. These points are developed more fully in Section 6.2. In view of the toxic nature of benzene, the unblended coal gasolines may require more careful handling than current petroleum gasolines. Information on toxicity of the fuels being screened is given in Section 4.6.

7. Ammonia and hydrazine are apparently the most corrosive fuels. Ammonia is corrosive to materials containing copper, brass and zinc. Hydrazine is corrosive to cobalt, copper, pure iron, lead, manganese, magnesium, tin and zinc. Corrosion due to the introduction of water into the fuel handling and storage system is also a potential problem. Hydrazine decomposition is also catalyzed by various metal contaminants.

8. Hydrogen can cause metal embrittlement at elevated pressures even at ambient temperatures (4-130). This must be considered in designing systems for distributing and storing hydrogen.

9. Table 4-5 summarizes information on fuel compatibility with various elastomers and plastics which might be used in the vehicle. There is by now a good deal of industrial experience in handling liquid hydrogen, methane, and ammonia. This experience can serve as a suitable starting point for selecting materials of construction for fuel systems to handle these compounds. However, the stringent performance requirements in a vehicle, centered around long-time, safe, and trouble-free operation, may impose new limitations on material selection. For example, the low viscosity and high differsivity of gaseous hydrogen will make it extremely difficult to contain in equipment having any non-metallic parts.

---

* However, the separation of benzene for petrochemical purposes is a possibility.

TABLE 4-5

EFFECT OF POTENTIAL AUTOMOTIVE FUELS ON VARIOUS ELASTOMERS AND PLASTICS[52]

Fuel	Swell, Vol % [a] [c]															
	CST	FVSi	EPM	EPDM	NR	CSM	EU	ECO	SBR	IIR	NBR	ACM	FPM	VSi	CR	PTFE
Hydrogen, (g)																
Hydrogen (l)																
Methane (g)																
Methane (l)																
Ammonia (g)																
Ammonia (l)																
Hydrazine (l)																
Methanol	15	8				0		27	2	-2	18	140	68	0	8	
Ethanol			-1	-4	4	6	75	25		5	21		13	5		
Coal-Gasoline[b]																
Coal-Distillate[b]																
Shale-Gasoline																
Shale-Distillate																
Benzene	113	23		103	190	S		198	180	92	155	214	10	70	168	
Toluene	37		218	150	187	188	138	163	157	87	144		5	83	171	
Hexane			178	93	125	24			53	51	27			108	21	

(a) Suitability criteria:

Not suitable	-	swell above 25%
Borderline	-	swell between 15-25%
Satisfactory	-	swell below 15%
S	-	material softened excessively

(b) Data on benzene and toluene may be taken as a guide to behavior of these highly aromatic hydrocarbon mixtures.

(c) Code:

CST - polysulfide rubber
FVSi - fluorosilicone rubber
EPM - ethylene-propylene rubber
EPDM - ethylene-propylene terpolymer
NR - natural rubber; polyisoprene, hevia
CSM - chlorosulfonated polyethylene
EU - urethane rubber
ECO - epoxychlorohydrin rubber
SBR - styrene-butadiene rubber, GR-S
IIR - isobutene-isoprene rubber; Butyl rubber
NBR - nitrile-butadiene rubber
ACM - polyacrylate-acrylic acid copolymer
FPM - vinylidene fluoride-hexafluoropropylene copolymer (Vitan)
VSi - polydimethyl silicone with vinyl crosslinks
CR - polychloroprene (Neoprene)
PTFE - polytetrafluoroethylene (Teflon)

Blank spaces mean that data were not available.

EPA-460/3-74-009

A number of polymeric materials seem to have good resistance to the alcohols, e.g., chlorosulfonated polyethylene, butyl rubber, polydimethyl silicone with vinyl crosslinks, etc. There are no data on the effect of coal liquids on the various elastomers. A plastic resistant to the aromatic hydrocarbons is vinylidene fluoride-hexafluoro-propylene copolymer (Viton). Fluorosilicone rubber may also be a possibility.

4.2.4 Automotive Maintenance

Table 4-6 lists the fuel properties that relate to automotive maintenance requirements. None of these fuels is expected to contain excessive amounts of ash or vanadium.

The sludge tendency listed in the table refers to crankcase sludging in reciprocating piston engines. This usually arises because of unburned or partially burned high boiling fuel components which reach the crankcase by slipping by the piston rings. Shale and coal liquids would be expected to be quite similar to petroleum-derived fuels in this regard. However, this remains to be confirmed by engine tests. The combustion products of hydrogen and methane would be expected to be rather innocuous as far as crankcase conditions are concerned. However, the fuels rich in nitrogen, i.e., ammonia and hydrazine, might have bad effects because of reactive oxidation products (e.g., NO_x) and incompatibility with the crankcase lubricants (e.g., reaction with lubricant additives).

The question of lubricant compatibility is also of concern with the alcohols. The unburned fuel or oxidation products and the lubricating oil may form two phases in the crankcase, cause precipitation of the lubricant additives, or have other unexpected effects. These questions also can only be answered by engine tests.

4.2.5 Data Gaps

A study of Tables 4-2 through 4-6 shows a large number of estimated data and numerous gaps where an estimate was not felt to be justified. Section 8 of this report considers in detail the research data gaps which should be filled for those fuels selected for in-depth analysis. In addition, the brief tabulation below summarizes the key data gaps in physical and chemical properties of some of the fuels:

- Coal or Shale Gasoline: vapor pressure, Research O.N., Motor O.N., solubility in water, solubility for water, emulsification characteristics, storage stability, effect on elastomers and plastics.

- Coal or Shale Distillate: cetane number, viscosity, freezing point, pour point, solubility in water, solubility for water, emulsification characteristics, storage stability, effect on elastomers and plastics.

TABLE 4-6

FUEL PROPERTIES RELATED TO AUTOMOTIVE MAINTENANCE[g]

Fuel→ / Property↓	Hydrogen	Methane	Ammonia	Hydrazine	MeOH	EtOH	Higher Oxyg.[f]	Coal		Shale		Petroleum	
								Gasol.	Distill.	Gasol.	Distill.	Gasol.	Distill.
Res. Octane No.		133	130		106	106	(105)	82-98		35-91		86-93	--
Motor Octane No.		105			92	89	(90)	(75-86)		(?-82)		77-84	--
Ash, Wt. %	0	0	0		0	0	0	0.02	0			0	0.002
Na, ppm	0	0	0									0	1
V, ppm	0	0	0	0								0	Nil
Carbon Residue, Wt %[a]	0	0	0	0	0	0	0		0.02			Nil	0.1
Sulfur, Wt %										<0.001	<0.0001	0.03	0.2
Corrosivity	(k)	(k)	(b)	(c)			(d)					NP	NP
Effect on Plastics	See Table 4-5												
Sol. for Water @ 68°F ppm				infinite	------infinite-----							0.02	
Emulsion Tendency	(NP)	(NP)	(NP)									NP	NP
Lubricity		NP						(NP)	(NP)	(NP)	(NP)	NP	NP
Storage Stability	NP	NP		NP								NP[e]	NP[e]
Sludge Tendency	NP	NP										NP[e]	NP[e]
References		30	2		44	44						12, 67,68	12,66

Footnotes:

(a) on 10% bottoms

(b) Corrodes copper, brass, zinc.

(c) Materials to be avoided include cobalt, copper, pure iron, lead, manganese, magnesium, tin, zinc.

(d) May contain small amounts of organic acids which may corrode certain materials.

(e) Can be controlled by careful refining and aided by the use of proper additives.

(f) Estimated assuming Fischer-Tropsch oxygenated compounds consist approximately of 20% methanol, 50% ethanol, 20% propanol, 10% higher oxygen compounds.

(g) Code: NP - no problem
( ) - estimated values.
Blank spaces-data currently unavailable.

(k) Cryogenic hydrogen and methane require special materials to avoid embrittlement -- not really corrosion.

BASES OF ESTIMATES

Heat of Combustion of hydrocarbon fuels: (lower heating value)

$$\frac{\text{BTU/gal.}}{1000} = 18.4 + 15.8\left[\text{lbs./gal.} - 0.0034\ (\text{vol. \% aromatics})\right]$$

Cetane No.:

Distillates

Calculated Cetane Index from °API Gravity and Mid Boiling Point via ASTM Standard D 976

Others

Relationship between Octane Number and Cetane Number: from (4-69)

Other Properties of Hydrocarbon Gasolines & Distillates

By analogy from known properties of petroleum fuels and/or field experience in use and marketing of gasolines and diesel fuels.

- Hydrogen: Research O.N., Motor O.N., static electric characteristics.

- Methane: static electric behavior.

- Methanol: lubricity, corrosion, viscosity, emulsification tendency, storage characteristics.

- Ammonia: Motor O.N., lubricity, static electricity characteristics, effect on plastics and elastomers.

4.3 Cost of Manufacture and Distribution

The study calls for a cost comparison of alternative automotive fuels on the basis of the ex. tax cost at the pump. This cost is estimated by considering both the manufacturing and distribution plus marketing steps for the various fuels. However, before estimating the preliminary economics for these operations, it was necessary to specify the process used to manufacture the fuel from the source. Table 4-7 summarizes the various processes for this conversion, estimates the present stage of their development, and also gives an estimate of the earliest date of commercialization.

As regard the dates indicated on the table, they refer to commercialization of one of the alternates in those cases where a number of possible routes exist. The date represents the time at which production from the first one or two plants achieves significant levels. It might in principle be possible to achieve earlier commercialization of any one of the fuels indicated provided a massive national effort is dedicated to that end. However, it quickly becomes apparent that such a technique could not simultaneously be employed to bring along a number of potentially promising fuels. Consequently, the dates indicated on Table 4-7 represent an optimistic but balanced approach in committing capital, people, and natural resources to the production of the alternate fuels.

Turning to the economics, Tables 4-8 through 4-10 summarize the cost of manufacture and distribution. The basis agreed upon with the EPA involves the use of 1973 dollars for all costs. It was also decided to calculate return on investment using the discounted cash flow (DCF) method with a basis of 10% DCF return*. The details of this method are summarized in Appendix 7. In order to facilitate comparison among fuels of different energy content, it was further decided to calculate costs per unit energy content, given by $/MMBTU. The lower heating value of fuels was used in this calculation since the latent heat of water of combustion would usually not be recoverable in an automotive application.

---

* The sensitivity of the economics as a function of DCF return level was estimated for the most promising fuels.

TABLE 4-7

SUMMARY OF TECHNOLOGY FOR MANUFACTURING ALTERNATIVE FUELS FOR AUTOMOTIVE TRANSPORTATION

Fuel	Source	Type of Process	Stage of Development	Earliest Available Date: Year	Earliest Available Date: Comments	References
Gasoline or Middle Distillate	Coal	1. Liquefaction:				
		(a) Direct Hydrogenation:				
		- Hydrocarbon Res. Inc. (H-Coal): 850°F., 3000 psig; catalytic, ebullating bed	• H-Coal: operating 3 ton/day pilot unit proposing 300-600 T/D unit			
		- Bureau of Mines (Synthoil): 4000 psig, fixed bed of catalyst	• Synthoil: operating 10 lb/hr pilot plant; 0.5 T/D pilot plant built			
		- Pittsburg & Midway (PAMCO): non-catalytic, direct hydrogenation at 850°F., 1000 psig, makes low-ash, low-sulfur, solid product (350°F.) can make liquid fuels by further hydrogenation	• PAMCO: constructing 70 T/D pilot plant	1982		
		(b) Donor Solvent:				
		- Consolidation Coal: liquefaction at 800°F., 350 psig; ebullating bed for hydrogenating solvent and product oils	• operated 25 T/D pilot plant but shut down due to problems; Office of Coal Research considering reactivation			
		- Old Ben Coal: same general approach as Consol. Coal to make synthetic crude; could also run to make solvent refined coal	• plans to construct 900 T/D plant			See Section 5.2 for further details
		- Exxon: hydrogen donor solvent, which is catalytically regenerated external to the liquefaction reactor	• operated 0.5 T/D pilot plant; 200-300 T/D pilot plant under design			
		2. Pyrolysis:				
		- A number of processes under development (FMC-COED, TOSCOAL, Garrett) and one in commercial operation (Lurgi-Ruhrgas); these pyrolysis schemes are aimed at maximizing char and heavy fuels and are not good candidates for transportation fuel	• FMC-COED: operated 35 T/D pilot unit • TOSCOAL: operated 25 T/D pilot unit • Garrett: operating 300 lb/hr pilot plant	1979		
		3. Fischer/Tropsch:				
		- gasification of coal followed by catalytic conversion of CO + H_2 to liquid hydrocarbons at 300 psig, 400-600°F.	• commercial operation in South Africa (SASOL) at 6000 barrels/day scale	1979	Larger version of SASOL plant	
		4. Refining:				
		- The above processes yield a crude oil substitute (syncrude) which has to be refined hopefully using conventional technology	• refining of coal syncrude has to be fully demonstrated			

TABLE 4-7 (Cont'd.)

Fuel	Source	Type of Process	Stage of Development	Earliest Available Date: Year	Earliest Available Date: Comments	References
Gasoline or Middle Distillate	Shale	1. Retorting				
		(a) TOSCO Retort: ceramic balls transfer heat to shale; no combustion takes place in retort	• operated 1000 T/D retort			
		(b) Union Oil Retort: countercurrent flow of shale and hot air	• operated 1200 T/D retort			
		(c) Gas Combustion Retort: (Bureau of Mines) recycle gas and air burned in retort; countercurrent flow of gas and shale	• operated 360 T/D retort			
		(d) Paraho: externally heated recycle gas; countercurrent flow	• pilot plant program getting underway (but similar retort operated in Brazil at 2500 T/D)	1979		See Section 5.1 for further details
		2. Upgrading of Raw Shale Oil to Syncrude				
		(a) Pour point and viscosity reduction by "visbreaking"	• technology generally available for petroleum processing, but must be demonstrated on shale			
		(b) Hydrogenation and cracking to removed sulfur and nitrogen				
		3. Refining of Syncrude	• has to be commercially demonstrated			
Methane	Coal	General Scheme: coal and steam gasified, using oxygen to support combustion; CO/H_2 ratio adjusted; sulfur compounds, CO_2, other impurities scrubbed out; catalytic methanation; approximately 30 different processes under study. Some of the leading contenders are:				
		(1) Lurgi: 300 psig gasification	• commercially available up to 700 T/D for gasifier; methanation being demonstrated	1978		
		(2) Winkler: fluid-bed gasification at 1 atm.	• commercially available up to 700 T/D*	1978	based on start of detailed design in 1974	
		(3) Koppers/Totzek: gasification at 3000°F., 1 atm.	• commercially available up to 400 T/D*	1978		(4-102,103) also see Section 5.3 for further details
		(4) Babcock & Wilcox: entrained coal gasifier with char recycle	• commercially available up to 400 T/D*	1978		
		(5) Bituminous Coal Research, Inc. (BI-GAS): 2-stage gasifier at 1000-1500 psig	• 120 T/D pilot plant under construction	1981		
		(6) Institute of Gas Technology (Hygas): 2-stage hydrogasifier at 1000-1500 psig	• 75 T/D pilot plant in operation	1981		
		(7) Bureau of Mines (Synthane): fluid bed gasifier at 1000 psig	• 75 T/D pilot plant completed			
			* required methanation technology not yet commercially demonstrated			

TABLE 4-7 (Cont'd.)

Fuel	Source	Type of Process	Stage of Development	Earliest Available Date: Year	Earliest Available Date: Comments	References
Methane	Coal	(8) Consolidation Coal (CO_2 Acceptor)	• 30 T/D pilot plant in operation	1981		(4-102,103) also see Section 5.3 for further details
		(9) Exxon: char burning to provide heat for fluid-bed gasification	• 500 T/D pilot plant under design	1981		
Methanol	Coal	General Scheme: gasification of coal followed by methanol synthesis; methane made in gasifier is co-product.				
		(1) Gasification: see above	See above	1980	based on commercial gasification process	(4-104) also see Section 5.3 for further details
		(2) Methanol synthesis:				
		(a) Imperial Chem. Indust.: 700-1500 psig	• commercially available up to 1800 T/D			
		(b) Lurgi: 550-750 psig	• commercially available up to 600 T/D	1983	based on newer gasification process	
		(c) Vulcan/DuPont: 2000-2800 psig	• commercially available up to 2500 T/D			
Oxygenated Hydrocarbons	Coal	Fischer/Tropsch: similar to process described above, except conditions are adjusted to maximize production of oxy compounds.	• SASOL operation in South Africa makes oxygenated compounds as minor product along with hydrocarbons	1979	Larger version of SASOL plant	
Ethanol	Carbohydrates	Fermentation: anaerobic process, at ambient temperature and pressure; based on molasses, grain, sulfite waste liquor, and wood wastes; carbohydrates have to be hydrolyzed to sugars first; 50-60% potentially fermentable sugar in wood.	• commercially practiced using molasses, grain • sugar from wood hydrolysis also fermented commercially, but operation is more difficult to control	1978	based on existing fermentation processes	(4-119,121)
Hydrogen	Coal	General Scheme: coal or char is gasified; methane in gasifier effluent is converted to CO + H_2, CO is shifted with H_2O to CO_2, and CO_2, H_2S, CO are removed. Any of the gasification schemes described above could be adapted to make hydrogen.	• emphasis on gasification to methane; hydrogen processes in early pilot plant stage	1981	processes still not fully developed	
Hydrogen	Water	Electrolysis: electricity for cells from nuclear power plant, a longer range from solar converters	• electrolysis cells available up to 300,000 lb. hydrogen/day	1985	based on dedicating nuclear reactor for this use by 1975	(4-105,106)
			• nuclear reactors commercially available			
			• solar converters still in early research stages	>1990	for solar based electrolysis	
Hydrogen	Water	Thermochemical: series of chemical reactions whose net effect is: $H_2O \longrightarrow H_2 + \frac{1}{2} O_2$; many cycles have been proposed and analyzed thermodynamically	• paper studies and a few bench scale experiments	>1990		(4-107)
Ammonia	Coal or Water	Hydrogen either from coal or water combined with nitrogen from air in conventional ammonia synthesis	• ammonia production demonstrated up to 1500 T/D	1981	for H_2 from coal	
			• see above for hydrogen	>1985	for H_2 from water	
Hydrazine	Ammonia or Urea	(1) Raschig process: $NH_3 + NaOCl \longrightarrow NH_2Cl + NaOH$; $NH_2Cl + NH_3 + NaOH \longrightarrow NH_2\text{-}NH_2 + NaCl + H_2O$	• both processes commercial; Raschig better at >2MM lb/yr. • total U.S. production <50MM lb/yr.	1978	based on existing technology	(4-100)
		(2) Urea process: $NH_2CONH_2 + NaOCl + 2NaOH \longrightarrow NH_2NH_2 + NaCl + Na_2CO_3 + H_2O$				

TABLE 4-8

FIRST-ROUND SCREENING ECONOMICS FOR MANUFACTURING ALTERNATIVE AUTOMOTIVE FUELS

Basis: Costs are given in 1973 $ at the plant gate.
Plant sized for output of 6 x 10" BTU/day fuel corresponding to 100,000 barrels/day gasoline.
Costs include a 10% discounted cash flow (DCF) return (see Appendix for more information).

Fuel	Manufacturing Cost $/MMBTU (Lower Heating Value)	Basis of Manufacturing Cost
Gasoline from Coal	1.85; 2.35*	• Coal Syncrude: 7.80$/Bbl from National Petroleum Council (NPC) report (4-108) adjusted to above basis by escalating 1970 to 1973 at 4%/yr; 50¢/Bbl reduction going from 30M B/D to 100M B/D; 3$/ton Western sub-bitum; coal (8500 BTU/lb), hydrogenated via H-coal process; hydrogen made via Lurgi gasification process; 5$/ton coal would increase syncrude cost 13¢/MM BTU. • Refining: adjusted conventional refining costs (from 4-109) to reflect operation with coal syncrude; estimated 2.30 $/Bbl. • Total of 10.10 $/Bbl compares to 1.85 $/MMBTU @ 5.5 MMBTU/Bbl.
Middle Distillate from Coal	1.65; 1.75*	• Coal Syncrude: same as above. • Refining: estimated 1.70 $/Bbl for refining costs; note that gasoline and middle distillates are co-products in refining. The distribution of refining costs among co-products is considered in detail in Section 5.
Gasoline from Shale	1.25; 1.65*	• Shale Syncrude: 4.40 $/Bbl adjusted from NPC report; hydrogen supplied from process. • Refining: estimated 2.30 $/Bbl, same as for Coal Syncrude. • Total of 6.65 $/Bbl corresponds to 1.25 $/MMBTU @ 5.33 MMBTU/Bbl.
Middle Distillate from Shale	1.10; 1.05*	• Shale Syncrude: same as above. • Refining: estimated ca. 1 $/Bbl, which is considerably lower than for coal. This reflects the higher H/C ratio of shale relative to coal syncrude, and requires a detailed explanation as given in Section 5.
Methane from Coal	1.50; 1.65*	• Based on Lurgi gasification of 5 $/ton coal (4-108, 110); methane produced at 1000 psig; expect that improved technology for gasification could lower costs ca. 0.20 $/MMBTU.
Methanol from Coal	1.55; 2.00*	• Based on methanol costs from (4-111) adjusted to 20,000 T/D, 5 $/ton coal.
Oxygenated Hydrocarbon from Coal	3.50-4.00	• Hydrocarbon liquids from Fischer/Tropsch are expected to cost ca. 2.50 $/MMBTU as long as gas is the predominant product. In order to get oxygenated compounds, the best approach probably is to make olefins and hydrate them, which would increase costs about 1.00-1. $/MMBTU; if the synthesis were run to maximize the yield of liquids, the cost would escalate markedly.

* Identified costs that were recalculated using the more detailed procedures discussed in Section 5. All other cost estimates were made by adjusting economics from various literature sources to correspond with a common basis of scale, year, return level, etc., as explained in the last column of the table. In the initial part of the program, no attempt was made to analyze the published numbers in detail.

TABLE 4-8 (Cont'd.)

Fuel	Manufacturing Cost $/MMBTU (Lower Heating Value)	Basis of Manufacturing Cost
Ethanol by Fermentation	6.00	• Based on fermenting corn at 2 $/bushel, estimate 12.50 $/MMBTU (ca. 95¢/gal) (4-111), with adjustment to common economic basis with other fuels. This is a completely unrealistic scheme. • A more realistic prospect would be the fermentation of cellulose (at ca. 1¢/lb) e.g. from wood chips; a very rough estimate indicates that this could result in ethanol at ca. 6 $/MMBTU which corresponds to ca. 45 ¢/gal.
Hydrogen from Coal	2.60	• Based on either Lurgi gasification or partial oxidation with coal at 5 $/ton and hydrogen compressed to 3200 psig; it is anticipated that improved gasification processes would reduce the cost by ca. 0.20 $/MMBTU.
Hydrogen from Water	4.60	• Using an electrolyzer with 76% efficiency and a power cost of 10 mil/KW hr (4-111); there are good indications that 12 mil/KW hr (in 1973 costs) may be more typical of the 1980's, giving a hydrogen cost of 5.40 $/MMBTU.
Ammonia	6.25	• Based on hydrogen from water at 4.60 $/MMBTU and nitrogen at 2.90 $/ton based on (4-112) • Using hydrogen from coal at 2.60 $/MMBTU as above would lead to NH_3 at 3.35 $/MMBTU. Practically, however, it is totally unrealistic to convert coal to hydrogen to make NH_3 for automotive fuel use, when coal can be directly converted to hydrocarbons or methanol.
Hydrazine	ca. 20.	• Projections for Raschig process at 1000 T/D (4-106) indicate 28 $/MMBTU. For very large scale applications, a completely new synthesis would have to be developed, which, conceivably could lead to much lower prices.

TABLE 4-9

FIRST ROUND SCREENING ECONOMICS OF DISTRIBUTING AND MARKETING ALTERNATIVE AUTOMOTIVE FUELS

Fuel	Operation	Cost, 1973 $/MMBtu	Basis for Estimating Costs
Gasoline and Middle Distillate from Coal	(1) Pipeline syncrude from mine mouth	0.05	• 1000 mile Wyoming-Chicago pipeline; petroleum experience.
	(2) Products from refinery to bulk terminal (3) Retailing	0.95	• pipeline or barge plus bulk terminal handling. • tank-truck to service station plus retailing margin. } 11¢/gal. average for petroleum [ca. 3¢/gal. for (2); 8¢/gal. for (3)]
			• neglect differences in heat content between gasoline and middle distillate.
	Total	1.00	
Gasoline and Middle Distillate from Shale	(1), (2), and (3) as above	1.00	• neglect differences in heat content between shale and coal liquids.
Methane from Coal	(1) Pipelining of gas from mine mouth plant to liquefaction plant	0.30	• assumes that methane would be used as liquefied natural gas (LNG); did not consider cylinders of compressed gas a viable possibility for automotive transportation. • pipeline gas average of 1500 miles to liquefaction site; cost of 2¢/MMBTU/100 miles (4-113)
	(2) Liquefaction	1.60	• assume fairly small liquefaction plants (10 MMSCF/D) close to the market, in order to avoid an intermediate storage and distribution which would increase handling of LNG; costs based on (4-120)
	(3) Transportation to service station	0.45	• tank truck delivery over 250 mile radius; based on (4-120)
	(4) Retailing	1.65	• estimate by considering "typical" service station operation (prior to Fall 1973): ca. $150,000 investment, 360,000 gal./yr.; markup ca. 8¢/gal.; assume that LNG operation would involve ca. $100,000 additional investment [based on (4-120)]; assume 40% capital recovery factor for this added investment: $\frac{0.4 \times 100{,}000 \times 100}{360{,}000}$ = 11¢/gal. gasoline equivalent; therefore, total retailing cost is $\frac{8 + 11\ ¢/gal.}{0.113\ MMBTU/gal.}$ = 1.67, call 1.65
	Total	4.00	
Methanol from Coal	(1) Pipeline methanol from mine mouth plant to bulk terminal	0.22	• 1500 mile pipeline; cost prorated from hydrocarbon pipeline on basis of BTU content; if shipped by unit train, would cost $0.65/MMBTU.
	(2) Bulk terminal operations and truck transport to service station (3) Retailing	1.25	• see Section 5.3.6 for further details on costs of methanol distribution, including comparison with gasoline.
	Total	1.47	
		call 1.45	

TABLE 4-9 (Cont'd.)

Fuel	Operation	Cost, 1973 $/MMBTU	Basis for Estimating Costs
Ethanol by Fermentation	(1) Pipeline from plant to bulk terminal	0.10	• 1000 mile pipeline; prorate from hydrocarbon pipeline on basis of BTU content.
	(2) Bulk terminal operations and truck transport to service station	0.30	• intermediate between gasoline and methanol costs for equivalent operation on basis of intermediate BTU content.
	(3) Retailing	0.70	• assume $3,000 extra investment in service station; leads to ca. 70¢/MMBTU. (See sample calcs. on previous page.)
	Total	1.10	• the same total of $1.10/MMBTU can be used as a first approximation to the cost of distributing various mixed oxygenated compounds, as would result from Fischer/Tropsch synthesis.
Hydrogen from Coal	(1) Pipeline gas from mine mouth to liquefaction plant	0.45	• 1500 mile pipeline; cost averaging 3¢/MMBTU/100 miles from (4-111).
	(2) Liquefaction costs	3.50	• assume 100 T/D plant; equivalent BTU's to LNG plant (see above). These costs are substantially higher than those in (4-115) because of the smaller size plant chosen; this choice is dictated by a desire to eliminate a bulk storage transfer facility.
	(3) Transportation to service station	0.75	• based on use of H_2 Dewar trucks at $0.35/MMBTU/100 miles over 250 mile radius.
	(4) Retailing	2.60	• based on $200,000 extra investment in service station (i.e., 2 x investment for LNG); corresponds to extra retailing charge of 2.00 $/MMBTU relative to gasoline.
	Total	7.30	
Hydrogen from Water	(1) Liquefaction at nuclear plant	2.00	• liquefaction plants at nuclear plant, demanding much larger liquefaction plant than for case above; costs therefore much lower.
	(2) Distribution to bulk terminal and bulk terminal operation	1.00	• assume direct delivery of H_2 from plant to service station; requires longer average shipping distance than case above.
	(3) Retailing	2.60	• same as above.
	Total	5.60	
Ammonia, based on	(1) Liquid NH_3 from nuclear plant to bulk terminal and bulk terminal operation	0.50	• Ref. 4-13 for transportation from nuclear plant to bulk terminal.
			• assume 2 x gasoline costs.
	(2) Retailing	0.93	• based on $25,000 extra investment in service station; corresponds to 0.27 $/MMBTU extra retailing charge relative to gasoline.
	Total	1.43	
		call 1.45	

TABLE 4-10

FIRST ROUND SCREENING OF ALTERNATIVE AUTOMOTIVE FUELS

COMPARISON OF EX TAX COSTS AT THE PUMP

Fuel	1973 $/MMBTU		
	Manufacturing (from Table 4-8)	Distribution (from Table 4-9)	At Pump, ex Tax
Gasoline from Shale	1.25; 1.65*	1.00	2.25; 2.65*
Middle Distillate from Shale	1.10; 1.05*	1.00	2.10; 2.05*
Gasoline from Coal	1.85; 2.35*	1.00	2.85; 3.35*
Middle Distillate from Coal	1.65; 1.75*	1.00	2.65; 2.75*
Methanol from Coal	1.55; 2.00*	1.45	2.85; 3.45*†
Methane from Coal	1.50; 1.65*	4.00	4.35; 5.65*
Oxygenated Compounds from Coal	3.50	1.10	4.60
Ethanol	6.00	1.10	7.10
Hydrogen from Coal	2.60	7.30	9.90
Hydrogen from Water	4.60	5.60	10.20
Ammonia	6.25	1.45	7.65
Hydrazine	ca 20	not estim.	> 20

* See footnote on Table 4-8.

† Initially would be $3.85/MMBTU if methanol shipped by unit train rather than by pipeline.

Economics of manufacture are obviously a function of plant size. In these estimates the comparison was made for a plant size roughly corresponding to 100,000 barrels a day of petroleum gasoline production, corrected for differences in energy content. The economics collected from the literature were all corrected to the above bases.

In the subsequent part of the study, a detailed analysis was carried out on shale and coal derived fuels. Not surprisingly, this detailed analysis gave results significantly different from those obtained by a preliminary study of existing literature data. It was decided to take account of this, in Tables 4-8 and 4-9, by showing the original value in parentheses together with the subsequently revised costs.

Finally, the economics shown on Tables 4-8 through 4-10 are not presented for various time frames. They represent costs typical of the first generation technology for each fuel. The detailed analysis of the coal and shale derived fuels in Section 5 considers the effect of new and improved technology as well as other factors which would have an impact on costs through the year 2000.

Turning to distribution costs, a fair degree of approximation was involved, based on reasoning by analogy with the distribution and marketing operations for conventional petroleum derived fuels. No attempt was made to optimize the distribution system for each fuel. It was felt, however, that the results are adequate for initial screening purposes.

4.4 Fuel-Vehicle Compatibility

The compatibility of the fuel with the vehicle involves the interaction between the fuel and the engine as well as a consideration of fuel storage. The spark-ignited Otto cycle engine is by far the most common power plant in the U.S. car population. It is used in more than 99% of the vehicles (cars and trucks) on the road, with about 0.9% of the vehicles using the diesel engine. In terms of fuel consumed, the Otto cycle engine uses 92 vol. % of the total with the diesel engine using 8 vol. %.

However, the emphasis on exhaust emission control has sparked a great deal of work on low emission engines. It is very likely that the engine population will undergo significant changes in the 1974-2000 period covered by this study. Since it is not the purpose of this study to speculate on the prospects of alternative new automotive power plants, fuel compatibility has been considered for all potentially promising engine types. The major characteristics of the various types are shown in Table 4-11. The major distinguishing features are:

- The combustible mixture (i.e., the fuel and air) may be introduced to the combustion chamber either in a homogeneous or heterogeneous state.

- The combustion may be either intermittent, or continuous. If intermittent, some means of ignition must be provided, e.g., by spark, by compression to temperatures and pressures exceeding the autoignition point of the fuel, by glow plug, or by pilot injection*. The latter two are usually used only in conjunction with high compression ratios typical of the diesel engine. With steady-state combustion, ignition occurs only once when the engine is started and is not a critical characteristic.

- The device used to extract the expansion work from the hot gases may consist of reciprocating pistons, rotating pistons (as in the Wankel) or a turbine wheel.

The following shows the types of engines that will fall in the various classes:

Class			
A/F	Combust.	Ignition	Engine Types
Homo.	Intermit.	Spark	Otto Cycle; reciprocating and rotary
Hetero.	Intermit.	Spark, etc.	Stratified charge; recip. and rotary
Hetero.	Intermit.	Compression	Diesel Cycle; recip. and rotary
Hetero.	Continuous	---	Gas Turbine, Stirling, Rankine

Electric cars powered by batteries or fuel cells are considered for the sake of completeness in Table 4-11. However, battery-powered vehicles were not considered further in this study. Fuel-cell powered vehicles were within the scope of the power plants considered, which is the prime reason for including hydrazine in the initial list of fuels.

4.4.1 Modifications Required to Achieve Fuel/Vehicle Compatibility

A detailed engineering study to design a vehicle operating with the various future engine-fuel combinations is much beyond the scope of this report. However, estimates were made of the magnitude of the vehicle changes that might be involved, based on known characteristics of various engines and fuels, and accounts in the literature of actual operations with various engine-fuel combinations.

The estimate is expressed as a numerical compatibility rating defined as follows:

---

* Pilot injection - a relatively small amount of an easily ignited material is injected into a mixture of air and fuel that is more difficult to ignite.

TABLE 4-11

CHARACTERISTICS OF AUTOMOTIVE POWERPLANTS

Engine Name	Distinguishing Characteristics: State of Combust. Mix.	Type of Combust.	Type of Ignition	Type of Expander	Common Fuel
Conv. Current Auto	Homog.	Intermit.	Spark	Recip. Piston	Gasoline
Rotary Comb. (Wankel)	Homog.	Intermit.	Spark	Rot. Piston	Gasoline
Stratified Charge[b]					
Ford PROCO	Hetero.	Intermit.	Spark	Recip. Piston	Gasoline
Texaco TCCS	Hetero.	Intermit.	Spark	Recip. Piston	Gas./Dist.
Honda CVCC	Hetero.	Intermit.	Spark	Recip. Piston	Gasoline
Diesel	Hetero.	Intermit.	Compress.[a]	Recip. Piston	Distillate
Gas Turbine	Hetero.	Continuous	Not Crit.	Turb. Wheel	Gas./Dist.
Rankine	Hetero.	Continuous	Not Crit.	Turb. Wheel or Piston	Gas./Dist.
Stirling	Hetero.	Continuous	Not Crit.	Piston	Gas./Dist.
Electric[d]	←----------Storage batt. and elec. motor----------→				Central Power
Electric	←----------Fuel Cell, electric motor----------→				(c)

(a) Note in some types ignition may also be by glow-plug or pilot injection (small amount of easily ignited fuel injected into mixture of fuel and air).

(b) It is theoretically possible to also use a rotary piston engine.

(c) Technology most advanced with hydrogen, methylalcohol, hydrazine or reformed gases from petroleum stocks.

(d) Not considered in this study.

Compatibility Rating	Description
4	No modifications required
3	Minor modifications required
2	Major modifications required
1	Not practical

The rating is really the result of two separate considerations, i.e., the compatibility of the fuel with the engine and vehicle changes required to use the fuel.

Table 4-12 shows the qualitative compatibility ratings of the various fuel-engine combinations. The following discussion summarizes the assumptions involved and gives some general comments on compatibility:

- General

  - The distillates, regardless of source, are not suitable fuels for the carburetted Otto cycle engine because of inadequate anti-knock quality and volatility.

  - Gasoline fuels, regardless of source, having a Motor octane number above about 50, are poor fuels for a compression ignition engine because of low Cetane number and low viscosity. Increase in engine compression ratio (say from 15 to 22+) would help counter the poor compression ignition characteristics. However, engine operation would probably be harsh, rough and noisy.

  - The electrochemical reactivity of the hydrocarbon fuels is too low to make them directly suitable as fuels for automotive fuel cells. However, they might be reformed to H_2 and CO external to the fuel cell.

- Fuels From Coal and Shale

The critical combustion property of the gasolines is essentially their anti-knock quality. For the distillates Cetane number, flame luminosity and smoking characteristics are critical. All of these properties are related to the concentration of aromatic hydrocarbons in the fuels. As aromaticity increases, octane number increases, Cetane number decreases, flame luminosity increases, and smoking tendency increases.

The aromaticity of the fuels is largely a function of fuel processing and can be controlled by the severity of the hydrogenation conditions employed. High octane number gasolines either from coal or shale will have a high concentration of aromatic hydrocarbons, as do

TABLE 4-12

COMPATIBILITY OF FUEL AND VEHICLE

Engine Class Characteristics	Vehicle Compatibility Rating With Indicated Engine Class[c]				
F/A Conditions →	Homo.	Hetero	Hetero	Hetero	Fuel[a]
Combustion →	Intermit.	Intermit.	Intermit.	Continuous	Cell
Ignition →	Spark	Spark	Comp.	NA	
Fuel ↓					
Pet. Gasoline	4	4	2	4	1
Pet. Distillate	1	3-4	4	4	1
Shale - Gasoline	4	4	2	4	1
Shale - Distillate	1	3-4	3-4	3-4	1
Coal - Gasoline	4	4	2	3-4	1
Coal - Distillate	1	3-4	3-4	3-4	1
Higher Oxygenates(100%)	3	3	2	3-4	2
Higher Oxygenates as blends[b]	4	4	2	4	1
Ethanol(100%)	3	3	2	3-4	3
Ethanol as blend[b]	4	4	2	4	1
Methanol(100%)	3	3	2	3-4	4
Methanol as blend[b]	4	4	2	4	1
Hydrazine	2	2	1	3	4
Ammonia	2	2	1	2	2
Methane	2	2	1	2	1
Hydrogen	2	2	1	2	2

(a) These ratings are for the fuel with the fuel cell. Actually, because of the excessive weight and size of the fuel cell, its vehicle compatibility is probably 2 or less.
(b) With a hydrocarbon fuel of appropriate characteristics; max. conc. ca. 15-20 vol. %.
(c) See previous page for description of rating system.

conventional gasolines. On the other hand, high Cetane number distillates, such as those from shale, will be of relatively low aromaticity. For the purpose of this part of the study, therefore, it was assumed that the processing of the coal and shale fuels can be adjusted to give the fuel quality required by the engine population. Under these conditions, and if the coal fuels are used without blending, the gasoline will probably have somewhat more aromatics than current gasolines and the distillate will tend to be borderline in cetane quality. However, if the coal fuels are blended with petroleum fuels, as is very likely to be the case, the potential problems are greatly reduced. In the case of unblended coal fuels, attention should be given to the following areas:

- Special gasketing, diaphragms and hose materials might be required in the fuel system to resist high aromatic concentrations.

- Difficulties in burning the distillate fuels cleanly may result in smoke-limited diesel and gas turbine engine operation. This limitation can probably be removed by hardware tailored to clean combustion of these fuels.

- Highly luminous flame may require special combustor design (as in the gas turbine) for better combustor wall cooling, cleaner combustion, and for reduction in smoke and particulates.

• Alcohols

- The relatively low heat of combustion will require, for methanol, about double the rate (weight or volume) at which fuel must be supplied to the engine to equal the power produced by a hydrocarbon fuel. This may mean larger fuel lines, pump, filter, carburetor, and jets (4-46).

- The high heat of vaporization combined with a low heating value means a large amount of heat (for methanol, about six times that for hydrocarbon fuel) must be supplied to the intake manifold of a carburetted engine to provide a given number of BTU's as vaporized fuel (4-43,46).

- The water sensitivity of gasoline-alcohol blends (4-44) requires special precautions.

- Alcohols make poor fuels for use in compression ignition engines because of their low Cetane numbers.

- Low flame luminosity suggests a simplified combustor design for a continuous combustion system (e.g., gas turbine).

- The particular solvency characteristics of alcohols may require changes in elastomers and plastics used in the fuel system, e.g., in diaphragms, gasket, lines, etc.

- Methanol is being seriously considered for use in fuel cells. It can be used as a primary fuel or can be reformed external to the cell to a hydrogen-rich gas.

- Ammonia

- The low heat of combustion indicates about two times the weight and three times the volume of ammonia, relative to petroleum fuel, must be introduced into the combustion chamber for equivalent power output.

- The high heat of vaporization coupled with the low heat of combustion indicates eight times as much heat as for petroleum fuel must be provided to generate a given number of BTU's as vaporized fuel. However, the low boiling point suggests that this could readily be supplied by the ambient air or engine exhaust.

- In order to provide performance equal to that obtained in current auto engines, supercharging with or without an increase in compression ratio, will be necessary (4-1).

- Hot spark plugs with wide gaps and high voltage ignition is required. A combustion chamber shape that encourages rapid ignition (4-2) is also desirable.

- The addition of a small amount of hydrogen to the ammonia (4-5 wt. %) is necessary for suitable part-load performance. This might be supplied by partial decomposition of the ammonia. A catalytic dissociator heated by engine exhaust shows promise (4-1).

- The high octane number of ammonia will allow the use of high compression ratios with a resulting improvement in thermal efficiency.

- Ammonia is a poor fuel for a diesel engine because of its low Cetane number. Combustion of ammonia requires high compression ratios (35/1) and high temperatures (300°F air and coolant). The use of alternate ignition sources (glow plug, spark plug, pilot injection) is a possibility (4-14).

- The low flame speed requires long residence time in a combustor for complete combustion. Ammonia requires a combustor volume about three times as large as that necessary for a hydrocarbon fuel. A catalytic combustor is a possibility (4-8).

- Pumping of liquid ammonia requires special attention to pump bearing surfaces because of its low lubricity (4-8).

- The electrochemical reactivity of ammonia is of a relatively low order making a fuel cell operating directly on ammonia of doubtful practicability. However, it is possible to decompose the ammonia to nitrogen and hydrogen for fuel cell use.

- The strong odor of ammonia will require careful attention to the fuel system to avoid leaks.

- The materials of construction of the fuel system must be limited to those not adversely affected by the corrosive nature of ammonia.

• Hydrazine

- The low heat of combustion means that about 2.5 times as much hydrazine as a hydrocarbon fuel must be delivered to the engine for comparable power output.

- The low heat of combustion and high heat of vaporization indicates that nine times as much heat as with a hydrocarbon fuel must be provided in a carburetted car to produce the same energy in the vapor. The relatively high boiling point of hydrazine (236°F) indicates a need to provide special means of supplying this heat.

- In general, with regard to combustion in a heat engine, hydrazine would be expected to behave in a manner analogous to ammonia.

- Hydrazine has a fairly high electrochemical reactivity and is therefore attractive as a fuel for fuel cells. The successful operation of a hydrazine fuel cell has been demonstrated (4-99).

- Corrosion and odor characteristics will require careful attention to the fuel system design.

• Methane

- In many respects methane is an excellent fuel for the Otto cycle engine. It has high octane number and burns cleanly (4-35,36,100).

- Because of its low boiling point (-259°F) it is metered and fed to the engine, in most cases, as a gas. This requires a gas-air carburetor (presently available), plus the necessary valves, pressure regulators and plumbing to handle the high pressure gas.

- A major disadvantage is the need for a bulky and heavy fuel storage system. This will be discussed later.

- The low Cetane number of methane indicates that it is not a suitable fuel for conventional diesel engines (compression ignition) because it is difficult to ignite by heat and pressure. This problem can be overcome by the use of ignition assists such as pilot fuel injection, glow-plugs or spark plugs. Stationary diesel engines burning methane are currently in operation using the pilot injection technique. However, this application involving constant power operation is a simple case compared to a vehicle which requires complete flexibility over a wide range in power.

- Methane is an excellent fuel for engines using steady-state combustion (e.g., gas turbine). It is clean burning with a flame that is relatively non-luminous.

- Methane is not promising as a primary fuel for fuel cells. It is possible, however, to reform methane to give a hydrogen-rich gas which can be reacted in a fuel cell. The combination of a bulky reformer plus a fuel cell makes this type of power plant very unlikely for automotive use.

• Hydrogen

- It has been demonstrated that a spark-ignited Otto cycle engine of the current type can be operated with hydrogen as a fuel without major changes in the basic structure of the engine (4-22,55). Changes involved in converting from a gasoline fuel include: (a) a reduction in compression ratio (to 8/1), (b) the use of a gas metering carburetor, (c) modification of the cam shaft (to change valve overlap characteristics), (d) use of sodium cooled exhaust valves, (e) a capacitive discharge ignition system, and (f) adjustment of spark timing and exhaust gas recirculation (to eliminate knock and backfire and to minimize exhaust emission). Water injection may be used in the place of exhaust recycle (4-24).

- Another approach is to use the Hydrogen Induction Technique (4-48) for which a significant improvement in fuel economy is claimed. In this method some modification of the cylinder head is required and a separate intake manifold for the hydrogen is required.

- It has been reported that a rotary combustion engine (Wankel) runs smoothly on hydrogen-air mixtures over a wide range of composition (4-57). No mechanical changes were required except to improve carburetion and to inject an oil spray into the hydrogen to provide lubrication for the rotor seals.

- The high auto-ignition temperature of hydrogen suggests it will be hard to ignite by compression, probably making it a very poor fuel for conventional diesel engines. The use of auxiliary ignition means such as a glow-plug or pilot injection might provide ignition but does not seem practical for vehicular application where wide and rapid changes in power are required.

- Hydrogen is an excellent fuel for a continuous combustor such as used with a gas turbine, Rankine cycle or Stirling engine. Its high flame speed, wide flammability limits, and non-luminous flame will allow the design of a small combustor capable of a wide range of operation, clean combustion, and long combustor life. The wide flammability range suggests that the hydrogen combustor can be run very lean indicating promise for reduced NO_x emissions by virtue of a low flame temperature. The following comparison illustrates the lowered temperature possible under lean conditions:

	Flame Temperature at Lean Limit, °F
Hydrogen	1500
Jet Fuel	2900

Data from (4-56)

The electrochemical reactivity of hydrogen makes it attractive as a fuel for fuel cells. This has been demonstrated by the successful use of hydrogen-powered fuel cells in the space program and developments for land-based applications.

In addition to engine changes, many of the fuels require substantial changes in the vehicle itself. These are primarily associated with storing enough fuel to provide a reasonable operating range between fuelings. Table 4-3 illustrates the problem by comparing the volume and weight of fuel plus fuel container required to carry the energy equivalent to gasoline-powered cars with a 20 gallon fuel tank. The weight and volume penalties associated with fuel storage, relative to a liquid petroleum fuel, are indicated below:

Fuel	Fuel and Container Debit* Lbs.	Ft.^{3}
H_2(g) @ 3000 psi @ 80°F	2100	63.0
H_2(1) @ 1 atmos.	220	7.4
H_2 as MgH_2	560	8.0
Methane(g) @ 3000 psi @ 80°F	366	25.0
Methane(1) @ 1 atmos.	106	13.0
Ammonia(1) @ 80°F	321	11.0
Hydrazine	233	3.3
Methanol	151	2.9
Ethanol	80	2.0
Higher Oxy Compounds	86	2.2

* Relative to liquid hydrocarbon fuel.

It is evident that normally gaseous fuels are at a considerable disadvantage relative to liquid hydrocarbon fuels with regard to fuel storage requirements.

The foregoing figures are valid if it is assumed all the fuels are used with a thermal efficiency equal to that of 1973 Model

internal combustion gasoline engines (i.e., ca. 9.5% in urban driving). As discussed previously (4-71), other engines have different efficiencies. The fuel storage debit of a given fuel-engine combination for a specified driving range should therefore be modified by an engine efficiency correction. The magnitude of this correction is quite significant for the diesel engine and for the "Hydrogen Induction Technique" in the internal combustion engine.

4.5 Environmental Effects

The use of an alternative automotive fuel involves environmental effects in a number of steps: (1) resource production, (2) manufacture and distribution, and (3) vehicle use. The following discussion highlights some of the issues in this area. A more detailed discussion is given in Section 5 of the report. Nevertheless, it is beyond the scope of this feasibility study to present a detailed assessment of environmental impact, particularly in the area of resource production.

4.5.1 Resource Production

The resources used to manufacture all the fuels being considered in the initial screening are shale, coal, water, and agricultural products. The most serious environmental concerns involve shale and coal mining.

- Shale

Considering shale mining and retorting, the major problem area is the efficient and environmentally acceptable disposal of the spent shale after the mined rock is retorted. The volume of such spent shale is ca. 110% the volume of the mined rock, due to expansion during retorting. It is essential that certain conditions be met in this operation:

(1) Dust formation must be suppressed.

(2) Leaching of minerals from the spent shale by rainwater must be minimized.

(3) The spent shale area must be revegetated in a manner compatible with the local fauna.

The recent environmental impact statement by the Department of the Interior (5-2) concluded that the techniques for accomplishing these

objectives have been successfully demonstrated on a pilot scale*. Full-scale demonstration of spent shale disposal and land reclamation techniques will occur when commercial mining and retorting operations are carried out on the tracts of the prototype leasing program.

In addition to spent shale disposal, good environmental management dictates minimizing the use of water which is scarce in the shale-producing areas of the West. As discussed in Section 5.1, about one third of the water required to mine and upgrade the shale to synthetic crude is used to wet down the spent shale. In principle, spent-shale disposal would be eliminated by a process of in situ retorting. The incentive to develop such a process is certainly great, but it, too, could have potential environmental problems, such as subsidence or ground water contamination.

Other environmental issues relative to shale are:

(1) Land availability: it has been estimated that a one million barrel/day shale industry would require 80,000 acres for 30 years' supply.

(2) Sulfur and nitrogen: provisions must be made to remove the sulfur and nitrogen, originally in the shale oil, which is released during upgrading.

(3) Population changes: the development of a mature shale oil industry will bring large numbers of people to sparsely populated areas of the country. The environmental consequences of such a situation on the local eco-system must be realistically assessed.

Overall, the Department of Interior assessment concludes that the environmental impacts of a one million barrel/day shale industry are serious but can be managed. Longer range, it will be critical to determine the environmental limitations as larger production levels are contemplated.

- Coal

The major environmental problem with coal involves strip-mining. In order to achieve coal production levels required for conversion to synthetic fuels as well as for direct power plant use, it will be necessary to strip-mine about 450 million tons/yr. by 1990. As with shale, it will be necessary to demonstrate that the strip-mined

---

* The conclusions in (5-2) relative to spent shale disposal and land reclamation have not been accepted in some circles. Other studies in these areas, now being completed, may help resolve some of the uncertainties.

land can be restored to an environmentally acceptable level. Water is also of concern in coal mining, and more importantly, in the conversion of coal to a synthetic crude, but overall the operations are less water-intensive than the corresponding shale operation.

As is the case for shale conversion, it is necessary to provide for recovery of sulfur and nitrogen during the syncrude preparation step. Furthermore, the mining and conversion operation will involve about the same number of people as for a shale oil operation of comparable size, bringing up the same ecological issues.

On balance, the environmental problems involved in shale mining and upgrading are felt to be more severe than those for coal, for an equivalent scale of operation (based on recovered energy). This will be dealt with further in Section 5.2.

4.5.2 Manufacture and Distribution

- Coal and Shale: The refining of syncrude from coal and shale and the distribution of the resulting products is very analogous to petroleum refining and distribution. The same environmental considerations apply regarding: (1) air and water effluents from the refinery, (2) prevention of leaks and spills in the distribution network.

- Methanol: As discussed in Section 5.3, the manufacture of methanol from coal involves gasification and methanol synthesis at the mine, giving rise to the environmental concerns mentioned above. In the distribution system, it is important to avoid spills which could pose toxicity problems if the methanol is not rapidly bio-degraded.

- Hydrogen: The major environmental concerns involve the nuclear reactor which will be required to generate the electricity for water electrolysis. This issue is beyond the scope of this study. The use of solar-based water electrolysis would avoid the difficulties associated with nuclear reactors.

- Ammonia: The technology is well-developed including methods of dealing with environmental issues involved in manufacture and distribution.

- Methane: With coal-based methane, the environmental concern is in the gasification step, as mentioned above.

- Hydrazine: Provisions have to be made to handle the aqueous effluents involved in the Raschig process (see Table 4-7). This is not a serious problem.

In summary, coal and shale-based liquid fuels require the most attention to environmental problems during manufacture and distribution.

4.5.3 Exhaust Emissions*

A partial list of the components of automotive exhaust includes nitrogen, oxygen, water, unburned fuel, carbon dioxide, carbon monoxide, oxides of sulfur, organo-sulfo compounds, oxides of nitrogen, various other complex nitrogen compounds, polynuclear aromatic hydrocarbons, various organo-oxy compounds (e.g., aldehydes) and particulates. The focus in this study has been largely on the emissions of unburned hydrocarbons, carbon monoxide and oxides of nitrogen, because these have been of primary concern in automotive combustion of hydrocarbon fuels. Furthermore, the available data are largely in this area. However, some general comments are made below about some of the other exhaust components.

While there is considerable controversy regarding the long-range effects of carbon dioxide in the atmosphere, the evidence is not persuasive that it constitutes a threat to the environment in the time-frame of this study.

There is a strong possibility that small amounts of unburned fuel will be present in the exhaust from each engine. This would be particularly objectionable with toxic and malodorous materials like ammonia and hydrazine. The amount of unburned fuels will probably be less with those power plants employing a steady-state combustion, in contrast to intermittent combustion of reciprocating piston engines. It is claimed that low molecular weight alcohols have the same photochemical reactivity as paraffinic hydrocarbons. There are indications that they tend to produce significant quantities of objectionable aldehydes in the auto exhaust. If catalytic exhaust treatment is used, this potential problem can be avoided (4-129).

The available data on the emissions of unburned hydrocarbons, carbon monoxide and oxides of nitrogen (calculated as NO_2) are shown in Tables 4-13 to 4-15. The units are gms/MMBTU to facilitate comparison among fuels having different heats of combustion. The relationship between gms/mile and gms/MMBTU requires a knowledge of the efficiency of the auto system. In making the conversions, appropriate efficiencies have been used for the various engines types as discussed earlier. However, it has been assumed that all fuels will give the same efficiency in a given engine. This may be open to question in some cases, e.g., with hydrogen which can be burned under very lean conditions (4-48,55). The test basis is the Federal Test procedure or a simulated version thereof except where noted otherwise (e.g., methanol in the Brayton cycle (4-49), ammonia in the Otto cycle (4-3)). In the case of existing

---

* This discussion of exhaust emissions is not intended to be a detailed assessment of the area, but is simply a screening assessment aimed at identifying potential emission problems with some of the alternate fuels.

TABLE 4-13

EXHAUST EMISSIONS - HYDROCARBONS

Cycle State of Comb. Mixture Combustion Ignition[p]	Exhaust Emissions - gms/MMBTU Otto Homo. Intermit. Spark	Str. Ch. Hetero. Intermit. Spark	Diesel Hetero. Intermit. Comp	Brayton Hetero. Continuous Not appl.	Rankine Hetero. Continuous Not appl.	Stirling Hetero. Continuous Not appl.	Fuel Cell
Fed. Requirement	1973 - 309; 1976*- 47						
Pet. Gasol.	298[a]	35[b]	--	(25)	4-36[e]	18-28[f]	--
Pet. Distill.	--		53[c]	26[d]	(5-35)	(20-30)	--
Shale Gasol.			--				--
Shale Distill.	--						--
Coal Gasol.			--				--
Coal Distill.	--						--
Higher Oxys - 100%			--				
Higher Oxys - Blend[g]	(200)	(25)[h]	--	(18)	(4-25)	(15-20)	--
Ethanol - 100%			--				
Ethanol - Blend[g]	(200)	(25)[h]	--	(18)	(4-25)	(15-20)	--
Methanol - 100%	95-165[h]		--	240[i]			
Methanol - Blend[g]	(200)	(25)[h]	--	(18)	(4-25)	(15-20)	--
Hydrazine	(0)	(0)	(0)	(0)	(0)	(0)	(0)
Ammonia	(0)	(0)	(0)	(0)	(0)	(0)	(0)
Methane	210[k]		--				--
Hydrogen	(0)	(0)	--	(0)	(0)	(0)	(0)

Note: See footnotes following Table 4-15.

TABLE 4-14

EXHAUST EMISSIONS - CARBON MONOXIDE

Cycle State of Comb. Mixture Combustion Ignition	Exhaust Emissions - gms/MMBTU Otto Homo. Intermit. Spark	Str. Ch. Hetero. Intermit. Spark	Diesel Hetero. Intermit. Comp.	Brayton Hetero. Continuous Not appl.	Rankine Hetero. Continuous Not appl.	Stirling Hetero. Continuous Not appl.	Fuel Cell
Fed. Requirement	1973 - 4460; 1976* - 390						
Pet. Gasol.	4300[a]	350[b]	--	(300)	19-300[e]	160-166[f]	--
Pet. Distill.	--		206[c]	290[d]	(20-300)	(150-170)	--
Shale Gasol.			--				--
Shale Distill.	--						--
Coal Gasol.			--				--
Coal Distill.	--						--
Higher Oxys - 100%			--				--
Higher Oxys - Blend[g]	(4000)	(350)		(300)	(20-300)	(150-170)	--
Ethanol - 100%			--				--
Ethanol - Blend[g]	(4000)	(350)	--	(300)	(20-300)	(150-170)	--
Methanol - 100%	320-1300[h]		--	372[i]			--
Methanol - Blend[g]	(4000)	(350)	--	(300)	(20-300)	(150-170)	--
Hydrazine	(0)	(0)	(0)	(0)	(0)	(0)	(0)
Ammonia	(0)	(0)	(0)	(0)	(0)	(0)	(0)
Methane	220[k]		--				--
Hydrogen	(0)	(0)	--	(0)	(0)	(0)	(0)

Note: See footnotes following Table 4-15.

TABLE 4-15

EXHAUST EMISSIONS - NO_x

Cycle State of Comb. Mixture Combustion Ignition[p]	Exhaust Emissions - gms/MMBTU Otto Homo. Intermit. Spark	Str. Ch. Hetero. Intermit. Spark	Diesel Hetero. Intermit. Comp.	Brayton Hetero. Continuous Not appl.	Rankine Hetero. Continuous Not appl.	Stirling Hetero. Continuous Not appl.	Fuel Cell
Fed. Requirement	----------1973 - 345; 1976* - 46----------						
Pet. Gasol.	265[a]	140[b]	--	(230)	12-35[e]	19-106[f]	--
Pet. Distill.	--		282[c]	230[d]	(10-40)	(20-105)	--
Shale Gasol.			--				--
Shale Distill.	--		(280)				--
Coal Gasol.			--				--
Coal Distill.	--						--
Higher Oxys - 100%			--				(0)
Higher Oxys - Blend[g]	(270)	(140)	--				
Ethanol - 100%			--				(0)
Ethanol - Blend	(270)	(140)	--	(230)	(10-40)	(20-105)	--
Methanol - 100%	43-45[h]		--	40[i]			(0)
Methanol - Blend[g]	(270)	(140)	--	(230)	(10-40)	(20-105)	--
Hydrazine	(50-2000)						(0)
Ammonia[j]	50-2000						(0)
Methane	230[k]		--				--
Hydrogen	235[m]		--	265-530[n]			(0)

Note: See footnotes following Table 4-15.

Footnotes to Tables 4-13, 14, and 15

a - Avg. 1972 cars. (1972 FTP) (4-83)

b - Honda - 1975 FTP (4-87)

c - Mercedes 220 D modified (4-88)

d - Assumes 11 mpg (4-77)

e - Estimated; LA-4 Driving Cycle (4-89,90,91)

f - Simulated 13 Mode Calif.-Cycle (4-92); CVS Test Simulation (4-93)

g - Estimated for 30% alcohol blend assuming emissions will be same as for gasoline corrected for reduced gasoline concentration in blend.

h - No exhaust cat. or EGR. UHC is mostly methanol. 1972 FTP. (4-82)

i - From combuster rig - exit temp. - 1400°F, 3 atmos. press., air flow 1.6 lbs./sec. (4-49)

j - Several studies are in considerable disagreement (4-3,84)

k - Cold-start, seven mode Federal Test Cycle (5.8 miles/test) (4-81); UHC largely methane

m - With 25% exhaust recycle (4-55)

n - Calculated for jet engine - cruise conditions

p - Code: NA - not applicable

q - NO_x emissions from fuel cell assumed to be nil because of low reaction temperatures

* Original 1976 Federal targets. Note: refer to page 74 for assumptions regarding gms/mi and gms/MMBTU conversions.

engines, the data are from units without exhaust emission treatment or exhaust gas recycle, except for the hydrogen-Otto cycle case which employed 25% exhaust recycle (4-55). The emission performance shown for the Brayton, Rankine and Stirling engines are estimated from data obtained in connection with EPA sponsored research directed at the development of low emission engines (4-77,89,90,91,92,93).

For the purpose of orientation, the relationship between gms/mile in the Federal standards and gms/MMBTU is indicated below assuming a vehicle having a fuel economy of 13 miles/gal.

Standards:	1973		Interim 1975		Original 1976	
	Gms/mi	Gms/MMBTU	Gms/mi	Gms/MMBTU	Gms/mi	Gms/MMBTU
HC	3.4	390	1.5	195	0.41	47
CO	39	4460	15	1720	3.4	390
NO_x	3.0	345	3.0	345	0.4	46

Actual data on emissions from alternative fuels are relatively scarce, which accounts for the many blanks in the tables. However, an attempt was made to estimate (indicated by parentheses) the emission characteristics in the cases where there was felt to be a close similarity with petroleum fuels. For example, methanol/gasoline blends were assumed to have the same emissions as gasoline run at the same equivalence ratio. The expected higher aromatics concentration of coal-derived fuels relative to petroleum was taken as sufficient reason not to assume similar exhaust emissions (4-129). As pointed out in Section 6.1, shale gasolines, if catalytically reformed to 90-100 Research octane number, also have a high concentration of aromatics, as do petroleum reformates of the same octane number. Of course, there is a high probability that the fuels from coal and shale will be used by blending with appropriate materials from petroleum. Such blends will approximate current petroleum gasolines and distillates in properties and behavior and would be expected to have similar exhaust emission characteristics.

The dashed spaces in the table indicate impractical fuel-engine combinations. The following observations are based on the tabulated emissions data of Tables 4-13 to 4-15.

1. Hydrocarbon and Carbon Monoxide Emissions

   - Hydrazine, ammonia and hydrogen will of course emit no hydrocarbons or carbon monoxide directly under any combustion conditions. It is possible, however, that burning lubricating oil can reach the combustion chamber and form these components.

- Hydrocarbon fuels alone and in alcohol blends will probably meet 1977 automotive emission targets if they are burned under proper conditions (e.g., in a stratified charge, diesel, or steady-state combustion system). Exhaust treatment may allow these standards to be met in a conventional Otto cycle engine.

- The emission characteristics of the unblended highly aromatic coal and shale liquids and the 100% alcohol fuels need to be established. There are data (4-82) indicating that 100% methanol emits less hydrocarbons and carbon monoxide than a hydrocarbon gasoline in an Otto cycle engine. A contributing factor is the ability of the methanol to run under leaner conditions than is possible with a conventional gasoline (see Section 6.3).

2. Oxides of Nitrogen

- Meeting the 1976 target for NO_x emissions appears to be difficult for any of the fuels considered. There are data indicating a number of the fuels can probably meet this goal under very carefully controlled combustion conditions. For example:

  - Petroleum or shale source hydrocarbon fuels (including alcohol blends) in highly developed Rankine or Stirling engine type combustors (4-89,90,91,92,93). Data are needed on the behavior of the coal liquids (and highly reformed shale liquids) which contain a high concentration of aromatic hydrocarbons.

  - Hydrogen under some special conditions (4-48,94); however, supporting data have not yet been obtained.

In order to firm up and complete the picture on exhaust emission characteristics of future fuels, it will be necessary to operate a variety of engines under optimum conditions on the various fuels. This need for data is summarized in Section 8 of the report.

4.6 Toxicity and Safety

4.6.1 Toxicity

In judging the feasibility of alternative fuels, matters of toxicity and associated health hazards must be examined by the manufacturer and marketer for the potential impact upon employees, consumers, and the public at large. The following is a brief overview of these considerations for several fuels. In the absence of detailed specifications and composition data, it is assumed that additives or contaminants (trace or otherwise) will not be of toxicological significance. Product types, where this assumption is of critical importance, will be noted. For each fuel there will be a summary of toxicity information and a statement of risk.

1. Gasolines from Coal or Shale. These gasolines would be expected to contain the same range of hydrocarbon types as petroleum derived gasolines. However, the concentration of aromatic hydrocarbons in the coal-derived fuels is expected to be relatively high. Experience has shown that gasolines of considerable difference in composition have the same general toxicological properties.

(a) Toxicity - Gasolines generally act as irritants to skin and mucous membrane and as anesthetics resulting from depression of the central nervous system. Mucous membrane (eye, nose, throat) irritation may be produced by vapor or liquid. Skin contact is irritating. On a prolonged or repeated basis this contact may produce defatting of the skin leading to dermatitis.

The oral toxicity of gasoline is low; however, the aspiration effects are significant. Minute amounts of liquid gasoline which may be drawn into the lungs during ingestion can be rapidly fatal.

The dermal toxicity of gasoline is low. It is doubtful that toxicologically significant amounts can be absorbed through the skin.

The most important route of entry of gasoline is by inhalation. Excessive exposure to gasoline vapors may induce symptoms of alcoholic intoxication including a feeling of fullness in the head, headache, blurred vision, dizziness, unsteadiness, nausea, and allied symptoms. The time of onset and the severity of these signs and symptoms is related to the concentration. The olefin and aromatic content of the gasoline is important as these materials are more potent anesthetics. The irritant properties of the vapor cannot always be relied upon to provide an adequate warning. The question of effects from long-term exposure to low level of petroleum-derived gasolines is controversial.

Vague and ill-defined effects have been suggested, but no well-documented cases exist. The amount of benzene present in any gasoline assumed importance where prolonged or repeated low level exposure is possible. Benzene causes the destruction of the blood forming organs leading to aplastic anemia and has been implicated in certain cases of leukemia. No reports have been made of such effects from benzene-containing gasolines, but the exact exposure levels are not known.

(b) Hazard - oral ingestion - low apart from risk of aspiration
skin penetration - low
inhalation - high, particularly in confined spaces where vapor concentrations can rapidly build up
eye, skin, nose, and throat contact - moderate risk of irritancy

2. Distillates from Coal or Shale. These distillates would be expected to contain the same range of hydrocarbon types as petroleum distillates in the 325°-650°F boiling range.

(a) Toxicity - Distillates generally act as irritants to skin and mucous membranes. Toxicity is low by the oral, dermal, and inhalation routes. However, aspiration, the entry of small amounts of liquid hydrocarbon directly into the lungs, rapidly produces a severe injury to lung tissues which may be fatal. The low volatility of distillates precludes vapor build-up unless the liquid has been heated.

Skin contact may be irritating and on a prolonged basis can remove sufficient fat from the skin to result in a dermatitis. Eye contact results in only slight, transient irritation.

(b) Hazard - oral ingestion - low apart from risk of aspiration which is very hazardous
skin penetration - low
inhalation - low
skin, eye, nose, and throat contact - low risk of irritancy; increasing with increased severity of exposure

3. Methanol. The following comments regarding methanol would also apply to blends containing significant amounts of the alcohol.

(a) Toxicity - Methanol is both an irritant and a central nervous system depressant. The low molecular weight alcohols share these properties although their anesthetic potency is definitely less than the comparable hydrocarbon. Toxic effects include dizziness, stupor, cyanosis, cramps, and gastric disturbances.

Prolonged vapor exposure may also lead to headache, ringing in the ears, tremor, and disturbances in nerve function. Methanol is unique among the alcohols in that it produces degeneration of the optic nerve and retina leading to complete and permanent blindness. There is apparently a wide variation in individual susceptibility to methanol.

Acute toxicity studies in animals indicate that the lethal oral dose is 18 ml/kg vs. 12.5 ml/kg for ethanol. The toxic dose for man may be as low as 10 mg/kg, and the lethal dose as low as 50 mg/kg. Toxic effects, including blindness, have also been reported in man where skin absorption and/or vapor inhalation have been involved. It is not always possible to eliminate ingestion as an additional route of exposure in such cases.

(b) Hazard - oral ingestion - very high
skin penetration - moderate
inhalation - low (industrial exposures should be controlled to meet TLV* of 200 ppm)
skin, eye, nose, and throat contact - slight to moderate

4. Ethanol. The chief difficulty associated with ethanol exposure under industrial circumstances involves willful ingestion.

(a) Toxicity - Ethanol is a local irritant to mucous membrane and a central nervous system depressant. The action first involves inhibition of higher functions and later increasing degrees of anesthetic action. In this respect it is more potent than methanol.

Acute toxicity studies in animals point to a lethal dose of 12.5 ml/kg. The lethal dose for man is estimated to be 3 g/kg body weight (approximately 1/2 pint of absolute alcohol taken all at once). Although it is possible to produce toxic effects by skin absorption, the necessary conditions of exposure are such as to make it most unlikely. Absorption of toxic amounts of ethanol by inhalation is normally not encountered because the odor and mucous membrane irritation become intolerable before anesthetic concentrations are achieved. Repeated or prolonged exposures to ethanol vapor apparently have no chronic effect in man.

(b) Hazard - oral ingestion - moderate
skin penetration - low
inhalation - low (industrial exposures should be controlled to TLV of 1000 ppm)
skin, eye, nose, and throat contact - slight (skin) to moderate (mucous membranes)

5. Higher Oxygenates. Processes such as the Fischer/Tropsch may yield mixtures of aliphatic alcohols, with lesser amounts of aldehydes and ketones. Certain general statements can be made regarding such products. With the lower alcohols, toxicity tends to increase with increasing carbon number up through C_6. Skin penetration and irritancy effects also increase. Although the volatility is less with increasing molecular weight, the toxicity and irritancy are also greater. On balance, the hazard from the higher alcohols would be judged lower than for methanol and ethanol.

---

* TLV - Threshold Limit Value

With respect to ketones, industrial exposure has occurred to a considerable degree without significant health effects. Although the ketones may be toxic, the irritancy of the materials provides fairly effective warning. The vapors are considered narcotic, but concentrations required to produce obvious effects are also irritating to mucous membranes of the eyes, nose, and throat. Lower concentrations, not likely to produce discomfort, may lead to some impairment of judgment. In general, the toxicity irritation, and anesthetic potency increase with increasing molecular weight. Irritancy and toxicity also increase with increasing unsaturation. The liquids are painfully irritating to the eyes, and prolonged and repeated skin contact can irritate as well as lead to dermatitis from the defatting action of the solvent. Skin absorption is not likely to result in toxic effects from the common saturated ketones.

Aldehydes have generally produced only local reactions without severe cumulative effects under occupational exposure conditions. The local reactions consist of irritation of skin and mucous membranes of the eyes, nose, and throat. The response is most characteristically seen with the lower molecular aldehydes, particularly with unsaturation in the aliphatic chain. Aromatic aldehydes tend to be less irritating. Sensitization, a specific form of heightened responsiveness, is well known with formaldehyde and may also occur with other aldehydes. This effect is ordinarily associated with liquid contact and is only rarely reported from vapor inhalation. Some aldehydes (paraldehyde and chloral hydrate among others) have a definite anesthetic action, but this is much weaker with the typical aliphatic aldehyde. In general, the irritating properties of the aldehyde prevent voluntary exposure to toxic or anesthetic concentrations.

6. Methane. This hydrocarbon gas is a simple asphyxiant. The only physiological effects seen are the result of a decrease in the available oxygen due to the presence of methane. It has no warning properties. The limiting factor in exposure is the partial pressure of oxygen which should not go below 135 mm in atmospheres containing no toxic gases or vapors. Compounds such as methane and ethane are explosion hazards, and whatever precautions are taken to avoid this risk are adequate to protect against asphyxia.

7. Ammonia. The physiological effects of ammonia are directly traceable to its ability to produce local severe irritation of tissues.

(a) Toxicity - Ammonia is extremely irritating and highly corrosive to the eyes and respiratory tract. Suffocation and death from pulmonary edema can result from exposure to high concentrations. The irritant properties and pungent odor give adequate warning so that toxic exposures are not voluntarily permitted. Up to 500 ppm in air may be tolerated for an hour. Irritation of mucous membranes of the eyes, nose, and throat have been reported at 400-700 ppm. Exposures of 2500-6500 ppm have been judged dangerous for 0.5 hour, and 5000 ppm and above

is believed to be rapidly fatal. High concentrations of ammonia in addition to the corrosive action on eyes, throat, and respiratory tract may also reflexly affect heart and respiratory action. Moist atmospheres containing 1% or more ammonia may cause increasing amounts of skin irritation including chemical burns with blistering. There is no evidence of cumulative or chronic toxic effects following prolonged or repeated exposures to tolerable atmospheric concentrations.

(b) Hazard - oral ingestion - unlikely for a gas
skin penetration - low
inhalation - moderate (industrial exposures should be controlled to TLV of 25 ppm)
skin, eye, nose, and throat contact - variable, depending upon concentration; can be high where exposure is severe

8. Hydrogen. This odorless, colorless gas acts as a simple asphyxiant. The physiological effects result from a decrease in available oxygen due to the presence of hydrogen. There are no warning properties, and the onset of asphyxia may be insidious. The precautions taken to prevent fire and explosion are more than adequate to protect against oxygen deprivation and consequent asphyxia.

4.6.2 Safety

The major issue in fuel safety involves flammability and danger of accidental detonation. Coal and shale-derived hydrocarbons will require the same degree of caution as do the analogous petroleum products. The lower flammability limits of methanol and ethanol are 3-6% in air, and caution is required. Data on the flash point indicate, however, that the alcohols are safer than petroleum-derived fuels. Ammonia has fairly narrow limits of flammability combined with a high lower limit (16-25%) relative to the other fuels and should be fairly safe if properly handled. Methane must be handled with great care, particularly in the liquefied form. The proper procedures have been worked out in the natural gas industry. Nevertheless, the widespread use of methane, as LNG, in automotive transportation, would present serious safety problems. Similar considerations apply to hydrogen, which has been widely used as a liquid in the space program. The widespread use of this fuel in distribution networks, service stations, and on-board vehicles, is a cause for considerable concern. The question is whether the advantages of a fuel such as hydrogen, or methane, are sufficient to justify the stringent safety program needed to handle the hazards. Hydrazine is another fuel with serious potential safety problems. It has the one mitigating property of being a liquid at room temperature.

The safety aspects of these fuels are considered in Section 4.7, dealing with fuel selection.

4.7 Ranking of Fuels

An attempt was made to rank fuels using a semi-quantitative technique wherever possible. Relative costs were estimated for operating a vehicle using the various fuels. This cost comprised two components: direct fuel costs plus a correction to a common basis of comparison. The data for this comparison are summarized in Table 4-16.

The fuel cost in $/MMBTU, from Table 4-10, was first translated into a cost over the life of the car, taken as 100,000 miles, using as a basis an average of 13 miles per gallon for conventional gasoline in a spark-ignition engine. This value was corrected for relative vehicular efficiency by making the assumptions* that:

(1) the passenger vehicle in the 1985-2000 period will consume 25% less BTUs per mile than the average 1973 vehicle.

(2) this vehicle fuel efficiency is independent of the fuel (as a first approximation).

(3) the future hypothetical engine will be able to burn either gasoline or distillates.

Each of these simple assumptions is of course open to criticism. For the purposes of this simple ranking procedure, it does not matter which power plant is chosen as long as it can handle all the fuels under consideration, and as long as there is no major change in efficiency due to the fuel. As for the constant efficiency assumption, two perturbations were briefly considered involving efficiency debits (as measured by changes in fuel economy) due to (1) exhaust emission control equipment and (2) incremental car weight due to weight changes of the fuel storage system. The first of these reduces fuel economy on the order of 5% (4-16). This was felt to be insignificant in this type of simple analysis. The second was estimated using the data in Table 4-3. The efficiency correction was calculated to be quite small, ranging from zero for coal and shale liquids to 7% for ammonia and hydrogen. This was also factored into this comparison. The second column in Table 4-16 gives the corrected total fuel costs over the life of the vehicle.

The next column deals with fuel-vehicle compatibility as discussed in Section 4.4. In order to quantify this criterion, a cost was estimated for adjusting the vehicle to make it compatible with the fuel. The following costs were used:

---

* A somewhat more detailed analysis of fuel-related cost in operating an automobile is given in Section 5.5 for the more promising fuels.

TABLE 4-16

INITIAL SCREENING OF FUEL CANDIDATES

Criterion:	Cost at Pump $/MMBTU	Efficiency of Use	Compt. with Vehicle	Envir. Impact of Use	Toxicity	Safety	Totals $	Totals Ranking
Fuel		← $ →						
Coal Gasoline	3.35	2,150	0	250	50	50	2,500	4
Coal Distillate	2.75	1,800	0	200	0	0	2,000	3
Shale Gasoline	2.65	1,750	0	250	0	50	2,050	2
Shale Distillate	2.05	1,300	0	200	0	0	1,500	1
Methanol	3.45	2,450	50	100	50	50	2,700	5
Ethanol	7.10	4,850	50	100	0	50	5,050	8
Higher Oxys	4.60	3,250	50	150	0	0	3,450	6
Hydrogen (Liquid)	10.20	7,200	800	0	0	200	8,200	10
Methane (LNG)	5.65	3,900	600	50	0	150	4,550	7
Ammonia	7.65	5,100	400	300	200	150	6,150	9
Hydrazine	20+	14,000	100	350	200	200	14,850	11

Fuel	Vehicle Changes*	Estimated Cost, $
Alcohols	• increased fuel tanks, lines • improved gasketing material	50
Hydrazine	• provide for partial decomposition to yield H_2-rich fuel for best results • special materials of construction in fuel lines	100
Ammonia	• heavy, bulky fuel storage • special plumbing and carburetion or fuel injection • partial decomposition to H_2 for best results	400
Methane	• heavy, bulky fuel storage • special plumbing and carburetion or fuel injection	600
Hydrogen	• same as methane, but more costly due to lower temperature (liquid hydrogen) or complexity (hydride chamber)	800

* From column on stratified charge engine of Table 4-12.

The next column gives estimates of the costs of pollution control equipment. As a reference, an estimate of $250 (4-18) was used for the total cost of emission control equipment with conventional fuels. It was judged that the same cost would apply to gasoline made from coal or shale oil. The cost for using other fuels was estimated by considering the nature of the emissions relative to gasoline-type fuels. Ammonia and hydrazine were assumed to require additional equipment to handle ammonia in the exhaust and any increase in nitrogen oxides.

Finally, changes in the vehicle required to correct safety and toxicity problems with these fuels are indicated in the next two columns of Table 4-16. Ammonia and hydrazine are debited the most for toxicity and hydrogen and hydrazine the most for safety (with ammonia and methane not far behind).

Adding up the cost gives the totals and the ranking shown on the table. It is interesting to note that this relative ranking would be the same if only the direct fuel cost component were considered.

In view of the importance of fuel cost in this ranking, it is necessary to comment on the accuracy of the data. The costs quoted are

rough screening costs, and are probably no better than ±10% for the coal and shale fuels and significantly less accurate in the case of the other fuels. No attempt was made in this part of the study to assess the economic effect of technology improvements. Furthermore, since the costs were obtained by adjusting values from the literature, their accuracy is inherently limited.

As regards the effect of new technology, however, there is no a priori reason to assume that the production costs of one fuel would be reduced more than another. Overall, it is the contractor's judgment that a more detailed economic analysis of the cost of all the alternate fuels would not change the relative ranking of coal and shale derived liquids (gasoline, distillate, methanol, and higher oxy compounds) versus ethanol, hydrogen, methane, ammonia, and hydrazine.

The next step in this simple ranking analysis dealt with those criteria which could not be readily quantified, but which were felt to have an important bearing on selecting fuels for detailed consideration. One of these is earliest date of general availability, defined as approximately five years after a fuel is commercially introduced. Using the introduction dates of Table 4-7, it appears that all of the candidate fuels could be made generally available sometime in the 1985-2000 period. Large-scale hydrogen production via nuclear electricity would come quite late in this period, at the earliest.

Another important qualitative criterion is the ease with which the fuel can be introduced, which is related to its compatibility with existing fuels. On this basis, shale and coal based hydrocarbons would score highest, oxygenated liquids would be intermediate, and compressed or liquified gases would rate lowest. As a result, the following ranking was developed:

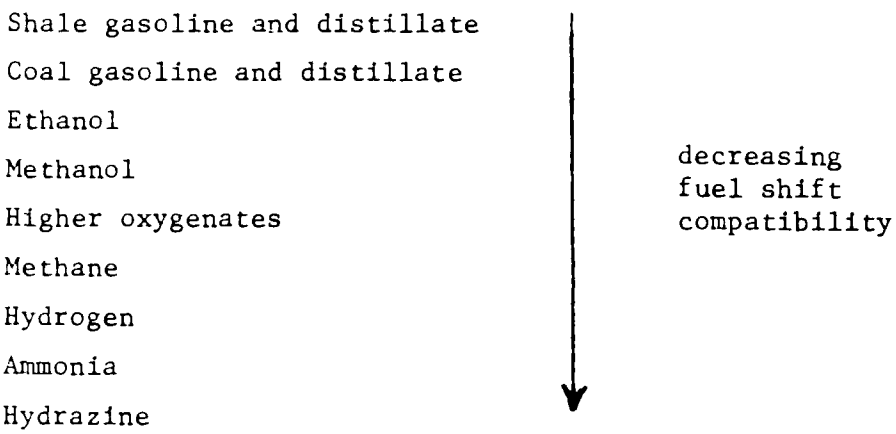

The last criterion considered is quite important, but also the most difficult to assess. It involves consumer acceptability and convenience. On a purely subjective basis, the fuels were rated as follows in this category:

Acceptability	Fuel(s)	Comments
High	Gasoline and distillate from coal and shale	Very much like petroleum
Moderate to High	Alcohols	Possible concern over odor and driveability problems
Low	Methane Hydrogen Ammonia Hydrazine	Concern over toxicity and safety

The overall rankings in Table 4-16 plus the qualitative discussions above were considered and the decision was made to examine five fuels in detail:

Fuel	Source
Gasoline Distillate	Shale oil
Gasoline Distillate Methanol	Coal

It was felt that this was the maximum number of fuel candidates which could be analyzed in detail considering the resources available to carry out the remainder of the study. There may be some question regarding the absence of hydrogen from the above list, in view of the attention which the so-called "hydrogen economy" has received. However, as is discussed in Section 3, coal and oil shale resources are large enough to provide for synthetic fuels capacity well into the next century. There is no foreseeable major driving force for introducing hydrogen into the automotive transportation fuel market in the 1975-2000 time period. Its main advantages of clean combustion and very high energy density per unit weight are not felt to be sufficient, relative to the best available technology for handling other fuels, to warrant the difficult transition.

A reasonable case might be made for including oxygenated compounds from Fischer/Tropsch synthesis as a fuel type for detailed analysis, based on projected costs and other criteria. However, as mentioned in Section 5.2.2, Fischer/Tropsch is a very inefficient process, particularly when geared to make special fractions, such as oxy compounds. The production of an impure methanol, such as "methyl fuel", results in materials which approach F/T oxy compounds in nature. Overall, therefore, oxygenated compounds can be considered as a variant on methanol, which will be covered in detail.

5. COST OF AUTOMOTIVE FUELS BASED ON COAL AND SHALE

In this section of the report, the fuels selected in Section 4 are considered in detail: gasoline and distillate from shale, gasoline and distillate from coal, and methanol from coal. For each fuel, the economics of manufacturing and distribution are developed, beginning with the resource in the ground and ending at the service station pump. The technology involved in these various steps is reviewed in sufficient detail so that the economics can be readily understood. Starting with costs based on technology now being developed, projections are made of potential improvements resulting in cost reductions through the year 2000. These projections are of necessity quite speculative, but they do serve to identify a number of technology gaps which are discussed later in the report, in Section 8.

5.1 Fuels From Oil Shale

5.1.1 Mining

It is possible to mine shale either using surface or underground methods. The major underground mining method involves the room-and-pillar technique, in which underground "rooms" are excavated, leaving pillars of unmined shale to support the structure. In this type of operation 25-40% of the shale is left behind as pillars. For most of the rich shales of ca. 35 gal/ton, which are close to the surface, it is possible to use a horizontal entrance for the room-and-pillar mine. This is called an "adit access" underground mine. A substantial effort has gone into developing technology for room and pillar shale oil mining over the last 20 years and the operation has been demonstrated in prototype mines.

Surface mining is a well-developed technique for a variety of ores. It requires the removal and disposal of whatever overburden is present, followed by a quarry-like mining operation of the underlying oil shale. The technique has not been applied to shale mining so far, but will be explored in the Department of Interior's prototype oil shale leasing programs. Factors determining the optimal mining method include topography, overburden, richness, deposit depth, underground and surface water conditions, surface ownership rights, disposal problems, and other factors.

The reported costs of open pit mining, strip mining, and adit access (horizontal entrance) underground mining, are roughly the same, as estimated by the National Petroleum Council. Development of specific sites may cost more or less than indicated in the NPC study depending upon local factors. It was therefore decided to use the NPC analysis on adit access underground mining as the basis of the economics given later.

Other minerals, nahcolite and dawsonite, are believed to

coexist and may have some future potential for recovery with shale oil. (5-28) Nahcolite is a sodium bicarbonate deposit, while dawsonite is a lean aluminum bearing ore. Definition of the deposits is poor and the extent to which they could be commercially extracted is not known. However, if later developments show that economic recovery is possible along with shale oil, these other minerals could contribute to lower costs on some tracts.

5.1.2 Crushing

Oil shale has resiliency and abrasive properties which lead to difficulties in the crushing operation. The NPC study was based on a process using heat transfer from recycled hot solids to extract shale oil. In this type of operation, shale was reduced to particles less than ½ in. in size.

In a process involving a different retorting system, the crushing equipment may be substantially simpler. For example, the Gas Combustion Retort of the Bureau of Mines (GCR), mentioned below, utilizes shale crushed to about 3 in. and smaller, thereby requiring less energy. However, fines of about 1/2 in. or smaller are produced and are unacceptable to the process. Briquetting is required to utilize these fines in the process. Alternatively, the fines for GCR may be used in an associated recycled hot solid retort.

The estimates of power requirement, maintenance and fines production have been based on experimental work carried out. Nevertheless, crushing technology will have to be demonstrated in commercial operation.

5.1.3 Retorting*

Retorting is the process or recovering oil from the shale-bearing rock. Several retorting techniques have been under development for the last several years. In all probability, a mature industry will include both recycled hot solid retorts and modifications of the Gas Combustion Retort.

- Recycled Hot Solids Retort

The Tosco retort, a form of the recycled hot solids retort, has been developed through semi-works demonstration and appears ready for commercial application. It is similar to the retort used in the NPC study which serves as the basis of this analysis. The Tosco retort is illustrated in Figure 5-1. It used direct contact heating of small sized shale particles with heated ceramic balls to pyrolyze the kerogen

* A brief summary of shale retorting technology was given in Section 4.3 (Table 4-7) as part of the initial fuel screening.

FIGURE 5-1

TOSCO II SHALE OIL RETORT

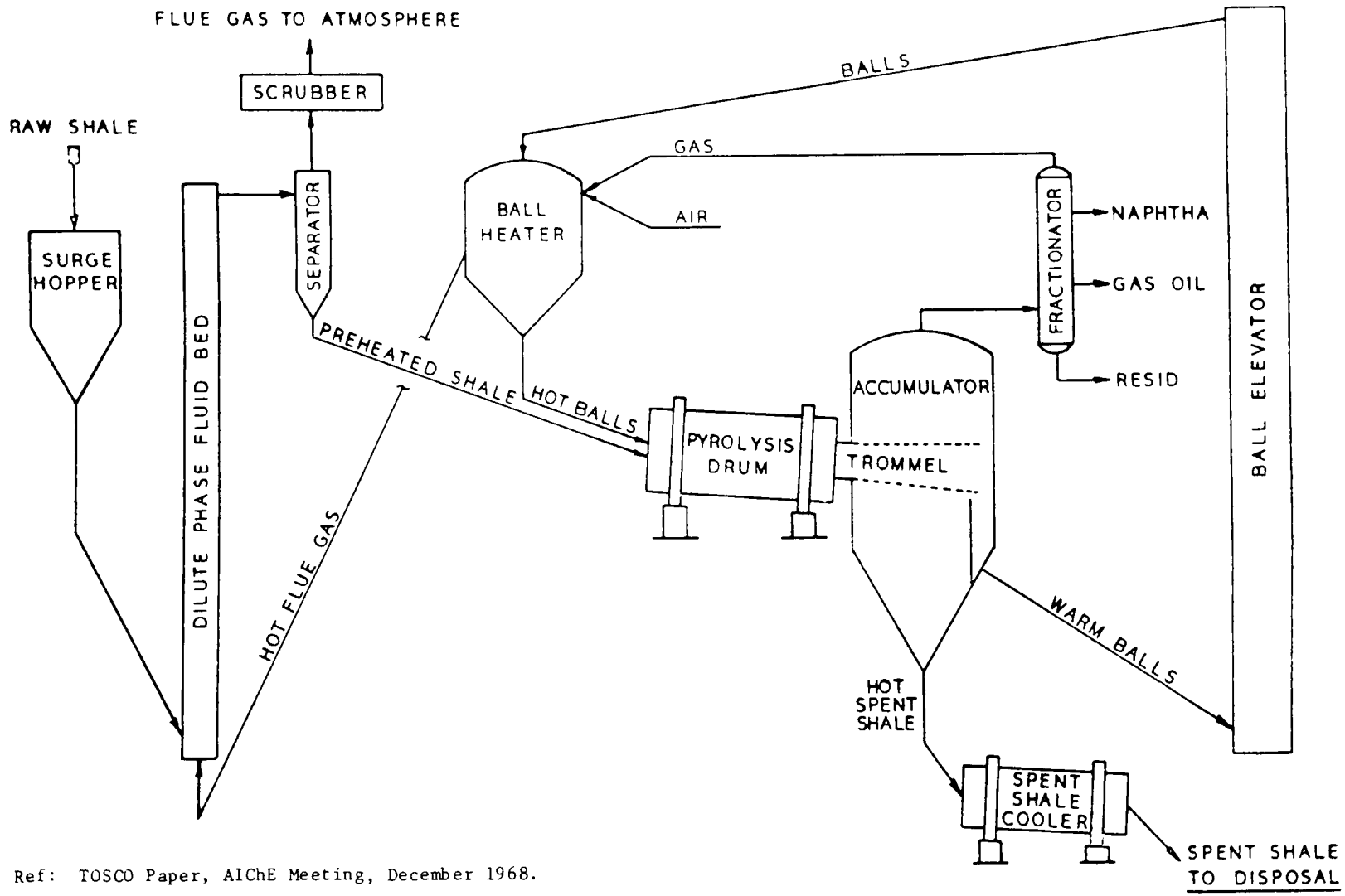

Ref: TOSCO Paper, AIChE Meeting, December 1968.

EPA-460/3-74-009

for recovery of crude shale oil. This retort is best suited for richer shales, containing 35 to 40 gal/ton of oil, on which it can achieve high recovery levels, exceeding 100% of that measured by the Fischer Assay test* for oil content. However, leaner shales may be best recovered using the Gas Combustion Retort, which is expected to have lower equipment and operating costs on a ton basis, but which cannot be used on rich shale.

The retort produces, along with the oil, a gas co-product that has a relatively high heating value of about 600-700 BTU/SCF, which can be used to help satisfy the large heat requirements for the process or for subsequent shale oil upgrading. In the NPC analysis, carbon on spent shale was assumed to be used as fuel for process requirements. The carbon content of spent shale is about 5%, equivalent to roughly 20 MB/D of fuel oil in a 100 MB/D plant. The operation of burning carbon on spent shale has not been demonstrated but has a large economic incentive. Since richer shale (35-40 gal/ton) tends to become friable when burned, burning carbon from spent shale may present special handling and dust problems which will require close attention and possibly new technology and equipment.

- Gas Combustion Retort (GCR)

The Gas Combustion Retort (GCR) has also been developed on pilot plant and semi-works equipment. Technology has been improved over the years and appears ready for commercial application. The oil content of the feed must not be too high, since clinkering and flow problems develop in the 35 gal/ton range. The shale size required for this process is larger than for the TOSCO retort, thereby reducing crushing requirements. However, particles smaller than 1/2 in. cause flow problems in the retort. These fines may be briquetted to an acceptable size or processed in a recycled hot solids type retort which can accept them as is.

In the GCR, illustrated in Figure 5-2, air is introduced into the middle of the retort where a combustion zone is created to generate the heat required for pyrolysis of the kerogen. However, the offgas, diluted with nitrogen from the air and products of combustion, is very low in heating value (about 90 BTU/SCF). As a result, economic use of the gas is limited to the immediate vicinity of the retort because transport of the gas would be costly relative to its value. In the Gas Combustion Retort process there is no requirement for external heat as there is with recycled hot solids. Hence, the gas has potential for use as refining fuel or for utilities generation. However, if refining

* A standard test for measuring oil content of shale. Since the procedure itself is a recovery method, recoveries referenced to it can exceed 100% if it is a more efficient recovery process.

FIGURE 5-2

GAS COMBUSTION RETORT FOR SHALE OIL

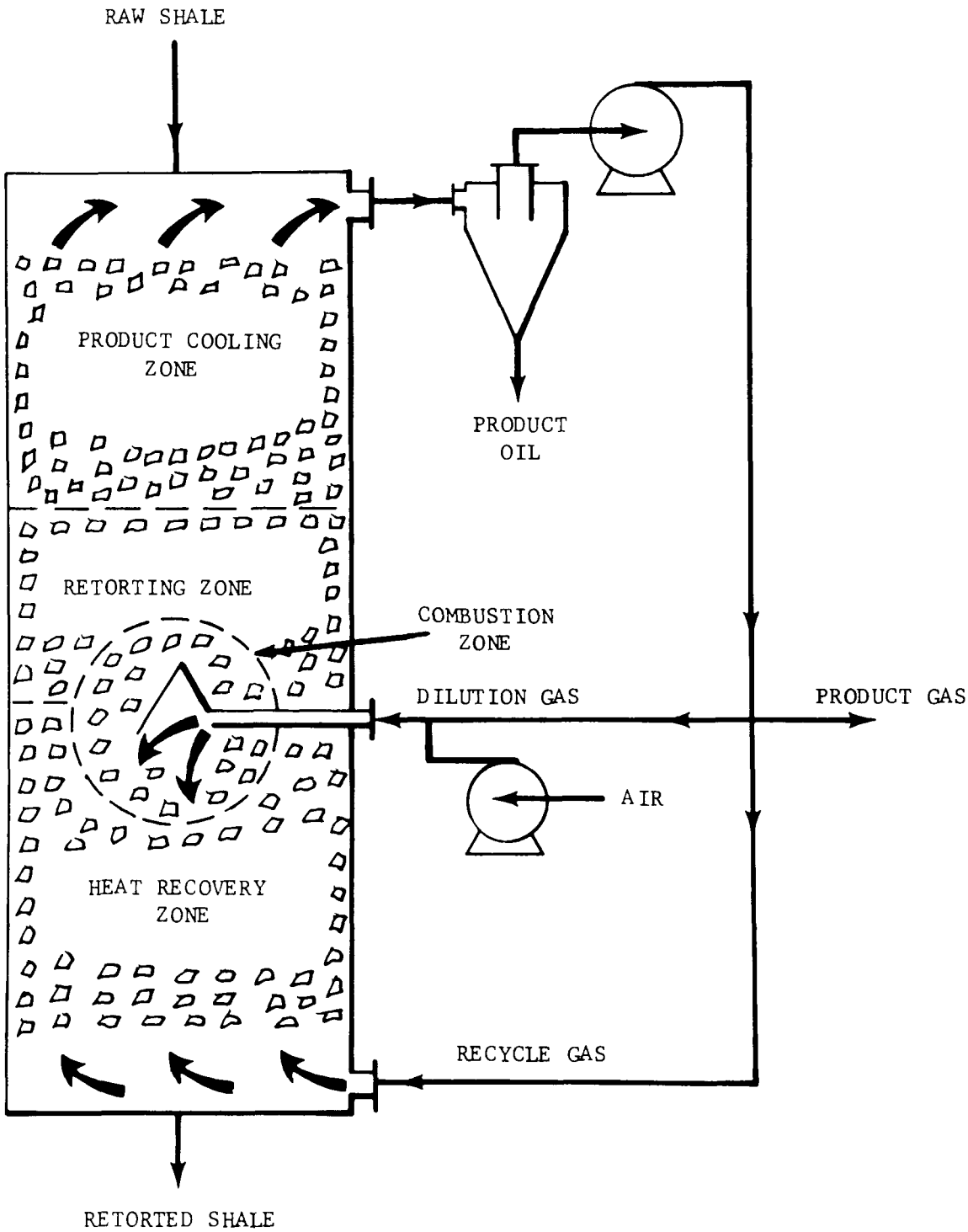

REF: BUREAU OF MINES R.I. 7303, p. 6, Nov. 1969.

of raw shale oil at the mine is kept to a minimum to reduce water consumption, finding a use for surplus low BTU gas could be a problem.

A modification of the GCR under development has potential for upgrading the quality of retort gas. In this modification, shown in Figure 5-3, heat for pyrolysis is provided through externally heating a portion of the offgas stream and reinjecting the hot gas into the retort. By eliminating internal combustion, nitrogen from air and combustion products are eliminated from the offgas. The spent shale in this operation will likely have a carbon content similar to that of the Tosco retort and could possible be used as fuel for the external heater. The richer offgas could be economically transported greater distances offsite and could be used in boilers or power generation not immediately adjacent to the retort. This modification has been incorporated in a semi-works plant soon to begin operation in Brazil.

Spent shale from the conventional GCR operation has only about half the carbon content of recycled hot solids retort spent shale. Since there is no external heating requirement for the GCR, the lower heating content may not be economically recoverable in a commercial operation. Stripped free of hydrocarbon in the retorting operation, this spent shale should pose no unusual disposal or reclamation problems.

- Retort Oil

In both the recycled hot solids and GCR operation, there is likely to be a small amount of entrained dust included in the oil. Although the level in commercial operation is not known, these solids could pose a problem in subsequent refining operations. If the raw shale oil is refined by coking, most of the solids will remain in the coke. In other operations, the solids may contaminate the catalyst unless removed. However, with careful design of equipment or a supplemental clean up operation, solids in the crude shale oil should be controllable to an acceptable level.

- Environmental Concerns

There are a number of environmental issues associated with shale oil retorting, which were mentioned briefly in Sect. 4.5. These mainly have to do with the disposal of the spent shale from the retorting operation.

In mining and crushing, the volume occupied by shale increases due to void space between broken particles. Although retorting causes a loss in weight of 15-20%, the volume of spent shale, even with maximum compaction, will occupy a larger volume than the deposit removed, by at least 10%. In some operations, return of some of the spent shale to mined-out areas may be possible at a later stage in development of the project. But even if such operations are possible, some disposal on the surface will be necessary.

FIGURE 5-3

PETROSIX PROCESS USING THE CAMERON AND JONES KILN

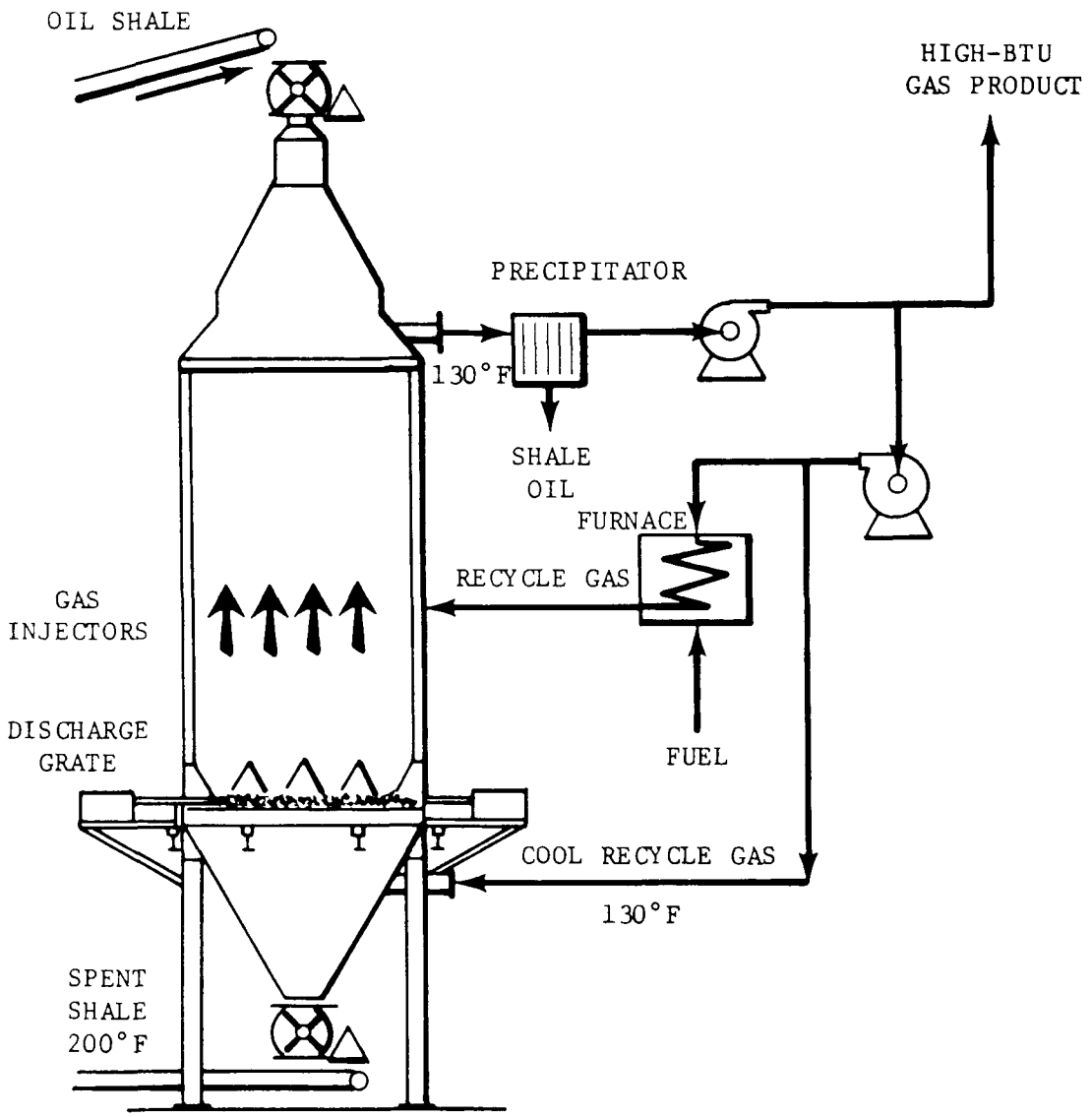

Ref: Proceedings of the First Five Oil Shale Symposia, 1964-1968, p. 319, Colorado School of Mines.

Surface disposal envisions filling box canyons with spent shale and providing facilities to catch and retain drainage from the area. When development of the project starts, the land will of course become unavailable or unusable for grazing and forage until revegetated. Original vegetation in the immediate disposal area will be covered and in nearby areas disturbed. However, the disposal area itself is expected to be stable. Spent shale will compact or set similar to Portland cement in the presence of water. Therefore, if adequately watered during disposal, leaching and erosion should be controllable.

The Department of Interior, in their Environmental Impact Statement, for the prototype leasing program, (5-2) estimated the impact of a 1 MMB/D industry on surface requirements. They foresaw a need for up to 80,000 acres over a 30 year period for mining, processing, spent shale disposal utility corridors, urban needs and all associated facilities. Of this, up to 50,000 acres are required for processing, about 15-20,000 acres for urban development, and about 10,000 acres for utility corridors. Through backfilling of processing land, use may be reduced to about 35,000 acres, of which about 15,000 acres could be used for other purposes.

Restoration of land is an area of major uncertainty. Rainfall in the semi-arid shale oil region is sparse, averaging about 10-16 inch/year. In addition, spent shale salt content is high. Consequently, restoration of the land will require salt-resistant vegetation that will use little water after it is established. Vegetation has been re-established on spent shale disposal areas in tests, but uncertainties over its permanence remain, particularly for a large scale operation, after the initial period of watering and caretaking stops. Additional research and development work must continue in this activity as the shale oil industry grows.

Special procedures and controls will be required to guard against free oil remaining on spent shale. Normally, there should be no oil on spent shale, but during upset conditions, special handling may be needed to remove retained oil. As will be pointed out subsequently, the cost of spent shale disposal is not expected to be excessive, assuming that the techniques so far demonstrated are shown to be valid in large scale operation.

Another area of concern involves the population influx associated with a rapidly growing industry in a sparsely populated area. Estimates made for coal conversion (5-26) indicate that a large mining and upgrading operation might involve 1,500 employees, which increases to ca. 20,000 persons total, including families, support workers, store owners, teachers, etc. This kind of estimate would probably hold for shale operations as well, and points up many potential problems which have to be addressed.

In situ Recovery

In view of the environmental concerns associated with

above-ground retorting, there is increasing interest in developing an underground, in situ, retorting technique. The recent Department of Interior study (5-2) summarizes the studies carried out to date, which indicate that fracturing of the impermeable shale rock was very difficult. It is crucial that an efficient method be developed for generating such permeability, so that the heat for retorting can be introduced and the products withdrawn efficiently. (8-1)

The use of nuclear explosives has recently been proposed (5-3) to fracture the shale. Occidental Petroleum has announced an in situ technique which involves conventional explosives to collapse a partially mined area, followed by in situ retorting (5-4). Another approach involves the use of acid-generating microbes, injected into the shale formation, to leach the dolomite away from the shale oil, making it easy to recover (5-5).

It is too early to tell whether in situ retorting truly provides an effective method for recovering shale oil with minimum environmental effects and at reasonable costs. It is quite conceivable that the in situ technique may lead to other environmental problems, such as subsidence or underground water contamination. This will have to be checked out in test programs. In addition, it will be necessary to demonstrate that good recoveries can be achieved. Much more data are needed to develop meaningful economics for in situ retorting.

5.1.4 Shale Oil Upgrading

As a refinery raw material, shale oil has a high pour point, as well as high nitrogen and sulfur content. The properties of raw shale oil from the Tosco process are shown on Table 5-1. The properties of GCR shale oil are quite similar to those of the Tosco retort. Sulfur and nitrogen must be removed either at the shale oil mining site or in the refinery where the shale oil is to be processed. The NPC study assumed a severe upgrading to remove sulfur and nitrogen, while reducing pour point, according to the scheme illustrated in Figure 5-4. The properties of the synthetic crude produced in such an upgrading operation are shown in Table 5-1.

An alternate to the severe upgrading operation located at the mine is to do a minimum amount of processing at the mine, just enough to make the raw shale oil pumpable via a pipeline to a central refinery location. This minimum processing would consist of simple coking or "visbreaking" to reduce viscosity and pour point. This approach will probably be favored as a large shale mining and retorting industry develops in the Rocky Mountain area. One driving force for such a change is water availability, as discussed below.

The synthetic crude produced by the upgrading scheme in the NPC study is actually superior in quality to the average U.S. petroleum crude. As shown on Table 5-1, the syncrude has only 50 ppm of sulfur and 350 ppm of nitrogen. It contains 28% naphtha, with the balance in

TABLE 5-1

TYPICAL PROPERTIES OF
CRUDE SHALE OIL AND SYNTHETIC CRUDE (Ref 5-1)

	Crude Shale Oil	Syncrude
Gravity, °API	28.0	46.2
Pour Point, °F	75	50
Sulfur, wt %	0.8	0.005
Nitrogen, wt %	1.7	0.035
RVP,(1) psi	-	8
Viscosity, SUS(2) at 100°F	120	40
Analysis of Fractions		
Butanes and Butenes, vol %	4.6	9.0
C_5-350°F Naphtha		
Vol %	19.1	27.5
Gravity, °API	50.0	54.5
Sulfur, wt %	0.70	<0.0001
Nitrogen, wt %	0.75	0.0001
K Factor(3)	11.7	12.0
Aromatics, vol %	-	18
Naphthenes, vol %	-	37
Paraffins, vol %	-	45
350-550°F Distillate		
Vol %	17.3	41.0
Gravity, °API	31.0	38.3
Sulfur, wt %	0.80	0.0008
Nitrogen, wt %	1.35	0.0075
Aromatics, vol %	-	34
Freezing Point, °F	-	-35
550-850°F Distillate		
Vol %	33.0	22.5
Gravity, °API	21.0	33.1
Sulfur, wt %	0.80	<0.01
Nitrogen, wt %	1.90	0.12
Pour Point, °F	-	+80
850°F-Plus Residue		
Vol %	26.0	None
Gravity, °API	12.0	
Sulfur, wt %	1.0	
Nitrogen, wt %	2.4	

(1) Reid vapor pressure

(2) Saybolt Universal Seconds

(3) Empirical characterization factor related to specific gravity and molecular weight.

EPA-460/3-74-009

FIGURE 5-4

FLOW DIAGRAM FOR UPGRADING CRUDE SHALE OIL

(Ref. 5-1)

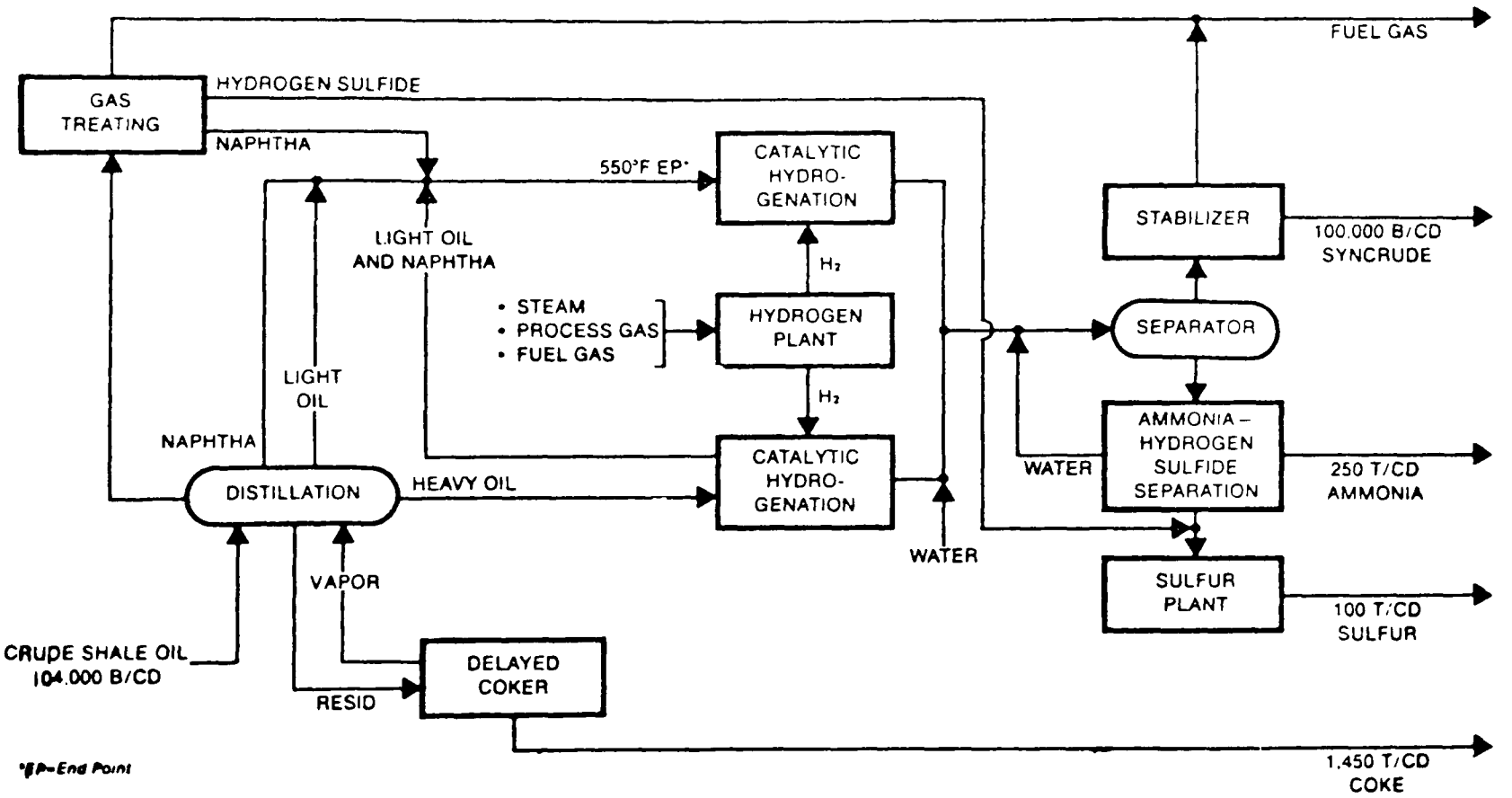

EPA-460/3-74-009

the distillate boiling range. Only 15% of the crude boils above 650°F. As pointed out later, it is an excellent crude for refining to automotive fuels.

5.1.5 Water Requirements

The table below summarizes the water requirements for a 100 MB/D shale syncrude plant.

Water Requirement for 100 MB/D
Synthetic Crude from Oil Shale

	Acre ft / Yr	1000's Gal / Day	%
Mining and Crushing	300	268	1.8
Spent Shale Disposal	3000	2678(1)	18.2
Retorting	6000	5356	36.4
Upgrading	7200	6427	43.6
Total	16,500	14,729	100.0

(1) Not required to be fresh water

The Environmental Impact Statement of the Department of Interior estimates that there is sufficient water available to support a 1 MMB/D industry by 1985. The study did not undertake to define the limits water might impose on the ultimate capacity of a shale oil industry. The table above shows that about half the water requirement is involved in upgrading the raw shale oil at the mine, according to the scheme of Figure 5-4. If this upgrading were moved to a refinery remote from the mine, by simply making the raw shale oil pumpable, the water requirement at the mine site would be substantially lowered. Water availability and its relationship to ultimate shale oil capacity remains a area of uncertainty which requires additional study.

5.1.6 Economics of Syncrude Production

Review and analysis of recent literature on shale oil indicates that the NPC study entitled: "U.S. Energy Outlook: Oil Shale Availability" provides a reasonable basis for determining the steady-state costs of producing shale syncrude. The study looked broadly at various types of mining and three levels of oil content.

In applying the NPC results to this study, some adjustments were made and alternatives considered:

- Project and Process Contingencies

Consideration was given to a possible adjustment to the contingency level of the project cost estimate. For major projects

where the processes are well known, e.g., a refinery project, a project contingency is generally added to allow for omissions, factors overlooked, and other unknowns. In early stages of development, where design details are lacking, the contingency factor may be in the range of 15-25% and in later stages, with well defined projects, only about 10%. Under the generalized circumstances for the shale oil plant described in the NPC study, the 25% project contingency was used.

An additional factor must be considered when the process itself is not well defined, or is under development. This involves uncertainties about process operations and their relationship to equipment and facilities.

During these early stages, experience shows that costs may be substantially underestimated. Usually after additional development work, uncertainties are reduced which reduces the probability of underestimating a project. It is very difficult to choose an appropriate level of process development contingency for shale oil plants. As a result of the experience on similar, large projects at an early stage of development, it is reasonable to expect that the initial cost estimates of this study may be 10-50% low. As more plants are designed, built, and operated, experience will generate technology improvements and begin to reduce costs. The NPC study estimated, for example, that costs might be reduced by about 10% due to the learning curve factor. In the economics discussed below, it was decided to base costs on the NPC investment and operating costs, adjusted to the basis of this study. However, the sensitivity of these results to higher investments is calculated.

- Economic Basis

In examining the NPC study, economics were developed for a 100 MB/D** case using 35 gal/ton shale. In developing this breakdown, the underlying economic factors were also reviewed and some minor changes in the NPC basis were made:

1. Depreciation life was assumed to be 16 yrs. on retorting and refinery instead of 15 years.

2. Sum of years digits depreciation was used instead of combination of double declining balance and straight line.*

3. 50% Income Tax was used instead of 52%.

---

* See Appendix 7 for details and definitions.

** The first commercial shale oil plants on the Dept. of Interior prototype tracts have been announced to be at the 50 MB/D level, but these will doubtless be expanded after commercial operation is successfully demonstrated.

4. Three months start-up with incurred costs but without production was deleted.

5. 2% salvage on all investments was credited at the end of their useful life.

6. Depletion allowance of 15% of upgraded product value was used without the 50% margin limitation for simplicity.

Other bases were not changed, including investment, operating costs, pre start-up investment schedule, project life, and royalty. These bases are shown in Appendix 7.

- Results for Base Case

The economic estimates of this study checked closely with those of the NPC for the same grade of shale, simply because the above changes were minor. The NPC estimate resulted in a syncrude cost of about $4.00/Bbl (1970 dollars) at 10% return and 35 gal/ton shale. The present study estimated $4.64 in 1973 dollars assuming escalation of 7.1%/Yr. from $3.77/Bbl in 1970 dollars.* Following is a breakdown of these costs by processing area.

Syncrude Production from 35 Gal/ton Shale
10% DCF Return, 1973$

	$/Bbl of Syn Crude
Mining	.83
Crushing	.30
Spent Shale Disposal	.20
Retorting	1.44
Royalty	.18
Sub Total	2.95
Upgrading	1.69
Total (excluding bonus bid payment)	4.64

* All the economics developed in Section 5, as well as in other sections of this report, are given in 1973 $ (except where specifically noted otherwise). If these figures were corrected to a 1974 basis, the escalation would be more than the 10% general inflation, reflecting higher escalation in various materials and labor costs.

Water costs and working capital were prorated as required in each of the operations. The mining operation cost of 0.83$/Bbl in this case is based on room and pillar mining with adit access. These costs should be a reasonable basis for a mature industry but some projects may incur higher cost if the mining method and location characteristics differ from the NPC analysis. The cost for room and pillar mining and surface mining costs should be similar. However, open pit mining has higher capital requirements mostly due to pre-startup development, but operating costs are about the same as other mining techniques.

The crushing costs of 0.30$/Bbl were developed for the Tosco type retort. It has greater crushing and briquetting requirements than the Gas Combustion Retort on a ton basis. However, the ability of the process to use richer shales provides an offset on a barrel basis.

Spent shale disposal represents a relative minor cost of about 0.20$/Bbl, of which 0.07-0.08$/Bbl is related to investment and 0.12-0.13$/Bbl to operating cost. At this point in time, however, there are still major uncertainties involved in spent shale disposal, many of which are site dependent. These include availability of a satisfactory disposal area, amount of spent shale that can be returned to the mines, use of conveyors versus trucks, amount of spent shale and compaction for a given operation, water availability for dust control and restoration, dusting problems, and others. As commercial experience develops, these uncertainties could well be resolved at substantially higher costs than those given above.

The retorting cost of $1.44/Bbl is based on Tosco type retorting of 35 gal/ton shale. This retorting process, as was mentioned earlier, has been demonstrated on a semi-commercial scale in Colorado. Because of the nature of the equipment, there are uncertainties as to durability of equipment and service factor. Initially, retorting costs may be higher than indicated, but as trouble spots are eliminated and technological improvements are implemented, costs should be reduced to the level shown.

A royalty payment was assumed at the level set by the Department of Interior prototype leasing program of 12¢/ton for 30 gal/ton shale, ± 1¢/ton for each gallon/ton greater or less than 30. For 35 gal/ton shale, the 17¢/ton royalty is equivalent to about 18¢/Bbl of syncrude after considering depletion allowance. At this level, the royalty is a small portion of the overall cost.

An additional cost which has <u>not</u> been included in the table is the bonus bid lease payment. As shown by recent bids for the first tracts under the U.S. Department of Interior prototype leasing program, the bonus bid payment is likely to be a major cost component of producing shale oil. Time value of money is particularly significant when considering the high bid of $210 million for the first lease in 1974 and projected start-up in 1980. Assuming the bids are payable in five annual payments beginning in 1974, the additional cost per barrel of syncrude at 10% return is about $1.00/Bbl for a 50 MB/D plant with a

20 year life. At 15% return, this cost is increased to $1.64/Bbl. A 30 year project reduces costs only slightly to 90¢/Bbl at 10% and $1.56/Bbl at 15% return, because the additional earnings are so far in the future. Building a second 50 MB/D plant five years after the first reduces the costs to 62¢/Bbl at 10% and $1.10 at 15% return. A third plant of 100 MB/D after 5 more years reduces costs to 42¢/Bbl at 10% and 82¢/Bbl at 15% return.

The upgrading cost of $1.69/Bbl represents the largest cost of producing synthetic crude from rich shale deposits. Processes and operations are reasonably well known and the costs estimates should be reliable for first generation facilities. Longer term potential exist for reducing investment and operating costs through improved catalysts for sulfur and nitrogen reduction. Nitrogen reduction was assumed to be a particularly difficult operation in the NPC study. Research in progress in the petroleum industry on the desulfurization of heavy feedstocks might have application to the catalysis of nitrogen removal from shale oil.

As was mentioned earlier, since shale oil upgrading uses large quantities of water, future shale oil recovery plants may be built with minimum upgrading facilities, relying on refineries in consuming centers for this operation. Under this concept, onsite upgrading would simply consist of a process to reduce pour point in order to make the crude shale oil pumpable by pipeline.

Upgrading produces byproducts such as coke, ammonia, and sulfur. Coke was valued at $4/Ton, ammonia at $30/Ton, and sulfur at $15/Ton. Taken together by-product values reduce the cost of shale oil by about 15¢/Bbl. which is fairly insignificant.

- Economic Sensitivities

(1) Richness of shale

Initial shale oil recovery will be aimed at the richer deposits of 35-40 gal/ton, but some of the shales with lower oil content could be produced as the industry develops, say by 1990. Shale richness, however, has a very significant effect on cost. Mining, crushing, retorting and ash disposal costs increase in inverse proportion to shale richness. The following data compare the cost for a 25 gal/ton shale with those for 35 gal/ton:

Effect of Shale Richness on Syncrude Costs

	$/Bbl of Syncrude	
	25 gal/ton	35 gal/ton
Mining	1.16	0.83
Crushing	.41	0.30
Spent Shale Disposal	.27	0.20
Retorting	2.02	1.44
Royalty	.11	0.18
Sub Total	3.97	2.95
Upgrading	1.69	1.69
Total (ex bonus bid payments)	5.66	4.64

Basis: 10% DCF, 1973$

In this estimate royalty is based on 7¢/ton for 25 gpt. Again, the retorting costs are based on the Tosco retort but for the leaner shales the Gas Combustion Retort, possibly with some modification, is likely to see economic application. The GCR has less complex equipment and operation but lower recovery. The GCR costs have not been developed in detail as have the Tosco retort costs, but work that has been done indicates that costs should be lower for leaner shale.

The costs shown here and in the NPC study represent operations where optimal size units have been achieved, and where leaner shale requires only additional units of similar size. Upgrading costs therefore are not directly proportional to shale oil content.

(2) Return on Investment

The NPC estimated the total investment for a 100 MB/D syncrude shale oil plant (adit access underground mining of 35 gal/ton shale) at $643MM. (1970 costs corrected to 1973 basis). This total includes $393MM for mining, crushing, spent shale disposal, retorting and associated water, and working capital, and $250MM for upgrading.

Because of this large investment, return on investment has a very significant impact on cost. The table below shows the estimated syncrude cost for three return levels and two grades of shale:

Effect of Return Level on Syncrude Cost, $/Bbl

35 gpt Oil Content	Return Level 5%	10%	15%
	Cost, 1973$/Bbl		
Mining, Crushing Ash Disposal, Retorting, Royalty	2.35	2.95	3.65
Total Including Upgrading	3.50	4.65	5.95
25 gpt Oil Content			
Mining, Crushing Ash Disposal, Retorting, Royalty	3.15	3.95	4.95
Total Including Upgrading	4.30	5.65	7.30

Bonus bid payments have not been included in these sensitivities, but were considered in subsequently calculating the gasoline and distillate cost.

(3) Investment Level

As indicated earlier, costs for large projects involving new technology are likely to be underestimated. The costs shown previously have been based on those shown in the NPC report. The following table shows the effect of a 50% investment increase on syncrude cost for two return levels:

Effect of Investment Escalation on Syncrude Costs

35 gpt Oil Content

% DCF return	1973 $/Bbl Syncrude 10		15	
Investment	Base	+50%	Base	+50%
Mining, Crushing, Ash Disposal Retorting, Royalty	2.95	3.70	3.65	4.75
Total, including upgrading	4.65	6.10	5.95	8.00

As expected, the effect of investment escalation is substantial.

(4) Water Costs

It would be possible to bring water by pipeline from the Pacific or the Mississippi to the shale producing areas of the Rocky Mountains. The economics of this scheme have not been examined in detail. However, as a first approximation, if the transportation costs are assumed to be the same as pipelining equivalent volumes of crude oil over the same distance, it could add about 1$/Bbl to the syncrude costs.

(5) Range of Potential Costs

The economic sensitivity calculations carried out above provide a range of expected costs of shale syncrude. The lowest cost in this range would correspond to a case based on 35 gal/ton shale, 10% DCF return, plus a 50¢/Bbl effect of bonus bid, giving a total of $5.15/Bbl. A reasonable upper limit in this range would be a case with a 30 gal/ton shale, 12% DCF, 25% investment escalation, plus a 50¢/Bbl bonus bid, giving a total of $7.15/Bbl.

5.1.7 Shale Syncrude Refining

A separate study was carried out to determine the cost of refining shale syncrude to gasoline and middle distillate. This was combined with a refining study of coal syncrude. This refining study was carried out as a separate unit, and since it involved a fair degree of detail in analyzing refinery operations, it is presented intact as Appendix 8. Relevant parts will be discussed and summarized separately in the coal and the shale section.

Following are some of the key parameters of the shale refining study:

1. Shale syncrude, as indicated by the properties shown on Table 5-1, is quite different from conventional petroleum crude in that it contains no "bottoms", i.e., material boiling above 850°F-975°F. Consequently, the refining sequence employed does not need any bottoms conversion processes.

2. The syncrude contains very little sulfur and nitrogen, which reduces the need for hydrotreating during refining.

3. The study was referenced to a 100 MB/D refinery located on the U.S. Gulf Coast.

4. Two cases were considered: one to make only gasoline, and a second to make both gasoline and distillate in the ratio of 2.4/1. For reasons explained below, this ratio is the maximum prudent distillate production*. This has important implications for distillate cost. The gasoline was refined to 91 Research octane number (unleaded) and the distillate to 50 Cetane Number.

5. The overall processing sequence is summarized schematically in the flow sheet on Figure 5-5. The syncrude is distilled into various fractions which fall into two types: initial/375°F, which goes directly

* The issue of distillates vs gasoline production, as it affects crude utilization, is considered, for petroleum crude, in an amendment to the present contract and is summarized in a separate report.

FIGURE 5-5

SIMPLIFIED SYN CRUDE REFINERY

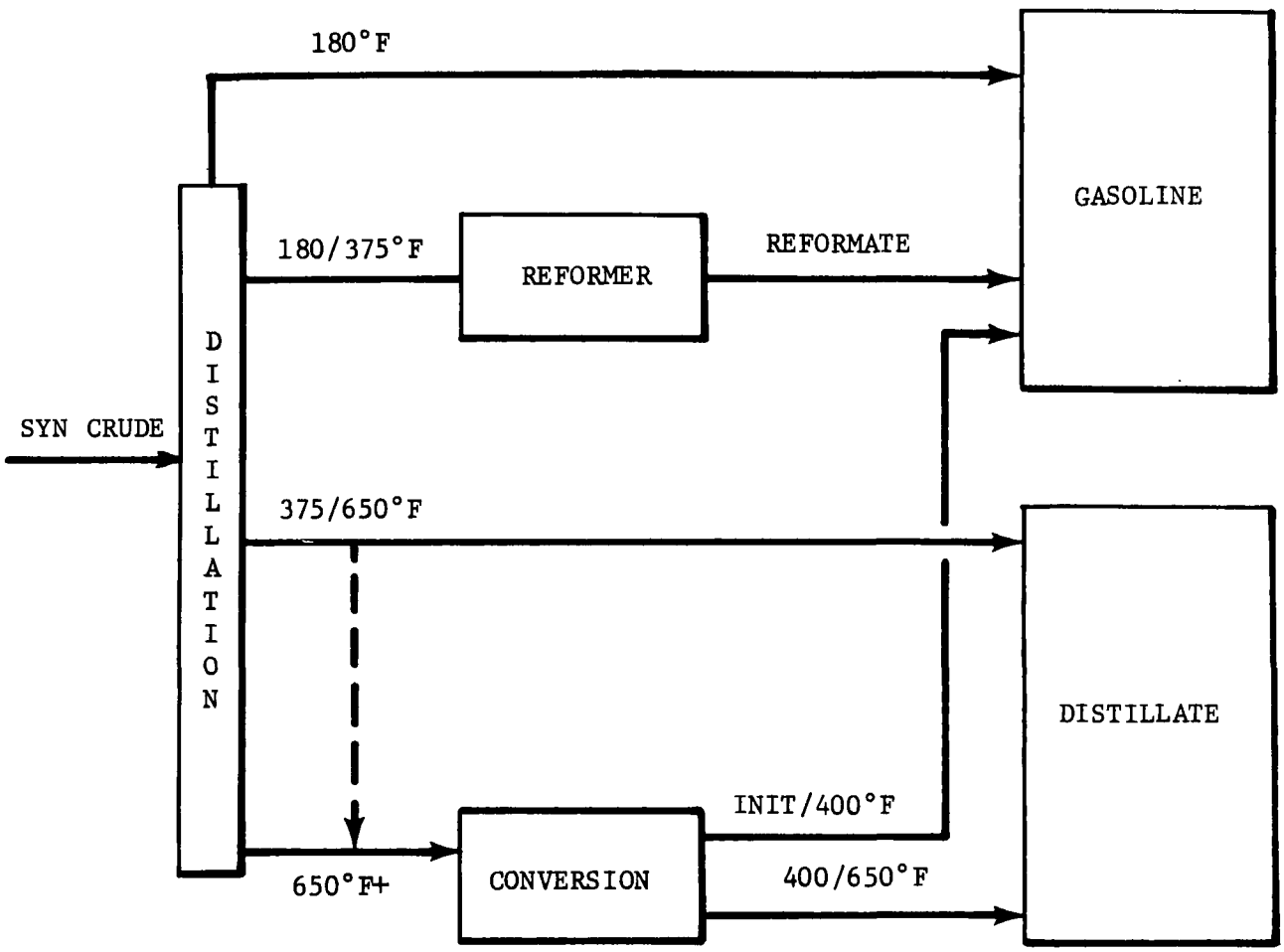

into gasoline production, and 375°/650+°F which is aimed primarily at distillate production. In order to achieve the octane number required for gasolines, the 180/375°F fraction of the syncrude is catalytically reformed. This is a process which primarily converts paraffins to aromatics (typified by the dehydrocyclization of heptane to toluene) along with some dehydrogenation (e.g., cyclohexane to benzene) and isomerization (e.g., normal to lightly branched hexanes).

The other processing step is a conversion of heavier to lighter material. The preferred process is catalytic cracking, which produces some lighter products to be blended into gasoline as well as the primary 400/650°F fraction for distillate.

In the case of maximum gasoline production, two steps are taken:

(a) the conversion process on Figure 5-5 is changed from catalytic cracking to hydrocracking, which is a more severe operation producing much more lighter material.

(b) all the 375+°F material is fed to this process, as shown by the dotted line.

In the case of maximum prudent distillate production, it is necessary to:

(a) back out the 375/650°F fraction from catalytic cracking.

(b) replace hydrocracking with (mild) catalytic cracking.

Even so, as mentioned under point (4) above, the distillate yield is only 35% on syncrude.

6. The economics of refining are presented in terms of the cost of gasoline and distillate made by the above processing schemes. Since these are co-products, there is a question of allocation of costs between them. This was done by calculating total costs for the two cases of maximum gasoline and distillate production, and then solving for the individual cost as two unknowns from two simultaneous equations.

The results of the refining cost analysis are as follows:

Auto. Fuel Product:	Gasoline Only		Distillate**	
	$/Bbl*	$/MMBTU	$/Bbl*	$/MMBTU
Syncrude	5.61	1.13	5.47	1.0
Refining				
ex fuel	2.00	0.40	0.19	0.04
fuel @ 6$/Bbl (ca $1/MMBTU)	0.27	0.05	(0.29)	(0.05)†
Total	7.88	1.58	5.37	1.00
Lower Heating Value MMBTU/Bbl	4.95		5.40	

* Cost is $/Bbl product; corresponds to syncrude at $5.27/Bbl (includes $0.62/Bbl large bonus bid for two 50 MB/D plants).

** Co-product with gasoline.

† This small credit to cost is due to the assumption that by-product fuel at $1/MMBTU is worth slightly more than the syncrude at $5.61/Bbl.

The high quality of the shale syncrude is reflected in the fact that it is possible to produce about 30% distillate by very simple processing. Actually, the table above indicates essentially a zero net cost of refining to distillate. In all refining processes, some gas is produced which has fuel value. Since shale syncrude has a relatively high H/C ratio, significant quantities of gas are produced, which are a credit against the refining costs. However, it is worth stressing again that the distillate costs are valid only for a situation in which the gasoline/distillate ratio is ca 2.4/1. If attempts are made to increase distillate yield at the expense of gasoline, the cost would rapidly escalate to the point where distillate becomes more expensive than gasoline. The analysis of this situation is beyond the scope of this contract.

As mentioned earlier, the gasoline produced by this scheme has a 91 lead-free Research octane number (RON). The emphasis on fuel economy in the future will probably involve a trend to higher octane numbers. This can be achieved by more severe catalytic reforming. The effect of increasing octane number on refining cost is not large, over reasonable increases. For example, based on the data in (5-6), refining cost would increase about 13¢/MMBTU (1.5¢/gal) if the gasoline octane increases from 91 to 96 RON.

Another way to present the economics is on the basis of capital investment required per unit product. This leads to the following result:

Auto. Fuel Product:	$/B/D	
	Gasoline Only	Distillate Plus Gasoline
Syncrude*	6660	6490
Refining	2020	390
Total	8680	6880

* Based on syncrude at $6240/B/D.

These investments will be compared with coal-derived fuels in Section 5.4.

5.1.8 Distribution and Marketing

The distribution and marketing of alternative automotive fuels is expected to have much in common with the current system used for petroleum fuels. Much of the same physical system may well be utilized. The alternate to tying in with the existing system is essentially to duplicate an investment which now has a replacement cost in excess of $15 billion. Table 5-2 gives recent and projected expenditures of the domestic petroleum industry. It indicates that marketing investments alone, which are strongly weighted towards automotive fuels, are expected to average $1.75 billion annually between now and 1985. These expenditures would, of course, be exclusive of any investments for a separate distribution system involving an alternative fuel.

- The Existing Distribution System: In view of the above considerations, it is worth outlining the elements of the existing petroleum distribution system before considering these functions in relation to the alternative fuels. Figure 5-6 is a very simple diagram illustrating the principal steps involved in bringing petroleum from tens of thousands of wells to hundreds of refineries. The diagram also shows the relations between oil and gas distribution and marketing.

Figure 5-7 illustrates how petroleum products move from the refinery to a bulk terminal and from there, in the case of motor gasoline, to the service station. The same system is used for delivery to large consumers except that the latter will have their own storage facilities, and would be able to accept delivery in bulk by barge, railroad tank car, or whatever is the cheapest mode of delivery for the quantity of product involved. The delivery of gasoline or diesel fuel to fleet accounts is analogous to the case of large consumers except that location and quantity will probably favor delivery by tank truck.

TABLE 5-2

RECENT AND PROJECTED EXPENDITURES OF THE DOMESTIC PETROLEUM INDUSTRY

	BILLIONS OF 1970 DOLLARS		
	ACTUAL EXPENDITURES		CUMULATIVE INVESTMENTS
	1970	1971	1970 - 1985
Exploration & Production	4.775	3.900	140
Natural Gas Plants	0.225	0.200	5
*Pipelines	0.450	0.550	13
*Tankers	0.100	0.125	7
Refineries	1.075	1.050	25
*Marketing	1.450	1.350	25
Chemical Plants	0.550	0.500	10
Other	0.265	0.290	15
TOTAL	8.890	7.965	240
*Subtotal for Transportation and Marketing	2.000	2.025	45
Subtotal as % of Total	22.5	25.4	18.8

Source: Chase Manhattan Bank Study, reported by Oil and Gas Journal, March 26, 1973

EPA-460/3-74-009

FIGURE 5-6

MAIN ELEMENTS OF TRANSPORTATION, STORAGE AND DISTRIBUTION

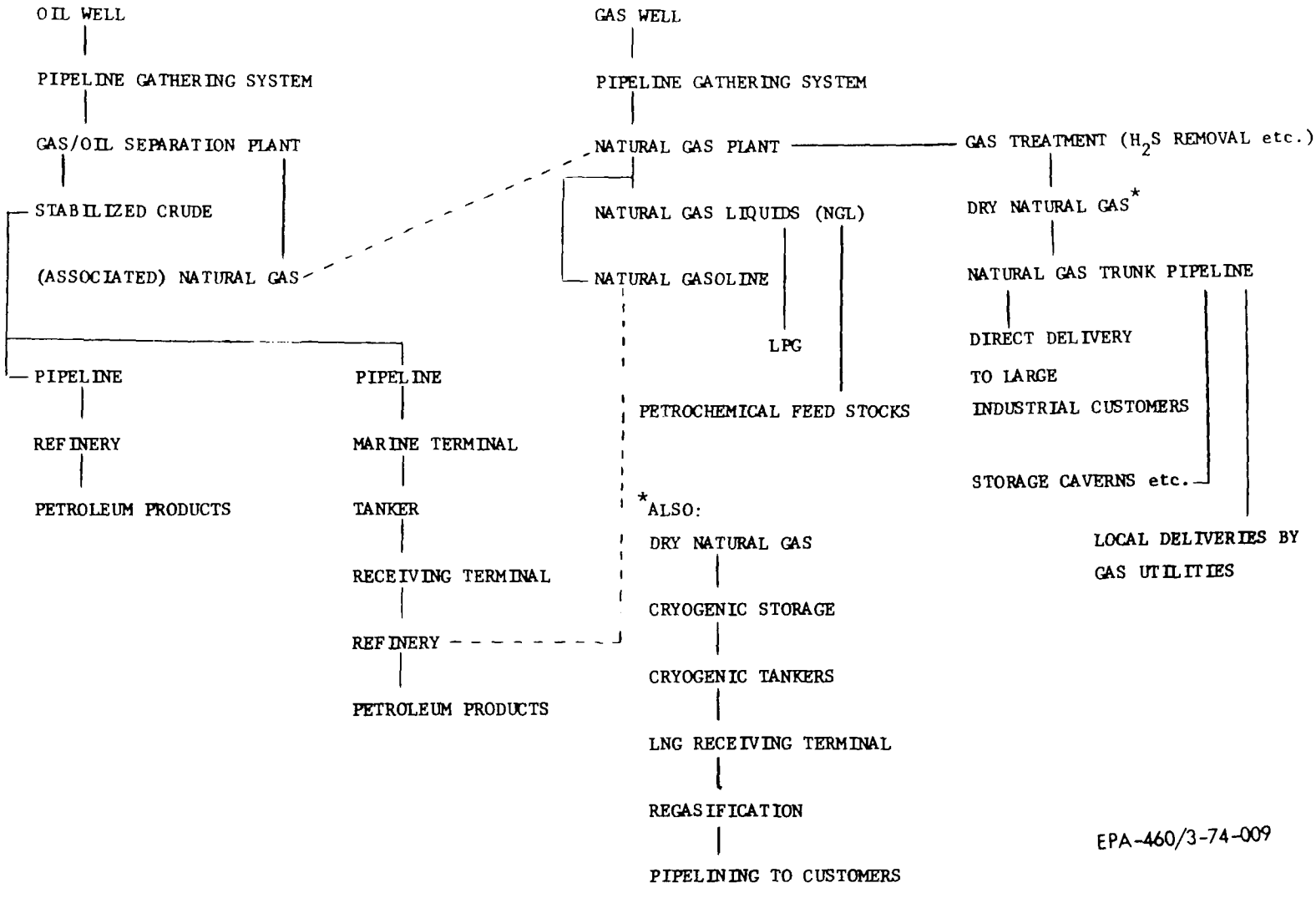

EPA-460/3-74-009

FIGURE 5-7

MAIN ELEMENTS OF PETROLEUM DISTRIBUTION FROM PETROLEUM REFINERIES

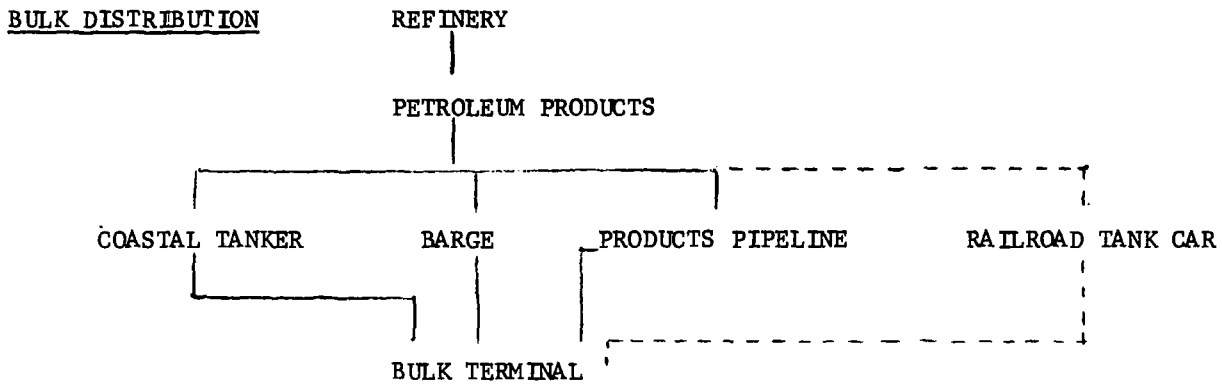

LOCAL DISTRIBUTION

BULK TERMINAL

TANK TRUCK

RETAIL OUTLETS

(SERVICE STATIONS FOR AUTOMOTIVE FUELS AND LUBES)

ALSO: MINOR QUANTITIES OF FUELS DISTRIBUTED IN DRUMS BY TRUCK

The distribution system for automotive fuels has grown over a period of more than 60 years and is in practice much more complex than the outline shown in these two figures. Although all major petroleum companies use the same basic system, the mix of their individual operations may vary greatly.

Another aspect of the marketing and distribution system is related to the seasonality of fuel demand. The peak demand for automotive fuels occurs in the summer while the peak demand for distillate fuel (heating oil) is in the winter. The petroleum industry deals with this seasonality by a combination of inventory buildup, conversion processes, and imports. Entirely new ways of balancing seasonal demand might be required when alternative fuels enter the market. It is most likely, however, that the alternative fuel will be absorbed on an incremental basis without dislocation, but with progressive adaptation of the existing balancing mechanisms. This will only be possible if the alternative fuels are compatible with conventional fuels and their distribution system.

• Shale Fuel Distribution System: For the purposes of this analysis, it is reasonable to assume that the distribution system for shale-derived fuels will be completely analogous to the one described above for petroleum. However, it is extremely difficult to be precise in projecting costs for this operation with a new fuel. The reasons for this lie in the great variations possible in the present system. For example, the distance between various points in the distribution network varies markedly throughout the country. As is pointed out above, the transportation mode between the refinery and the bulk terminal or between the bulk terminal and the service station varies greatly. Finally, the service station itself, which contributes the largest increment to the distribution costs, can be a company-owned station, a company-leased station, or a privately owned station. The economics for the retail operation differ substantially among these alternatives.

In Section 4.3 distribution costs were estimated for all the alternative fuels in the initial list. In view of the above complexities, it is beyond the scope of this study to make a more detailed analysis. Consequently, the distribution costs mentioned in Table 4-9 were used: $0.90-1.00/MMBTU from the refinery gate to the service station pump. This number will be used for both the shale and coal derived hydrocarbon fuels. A different situation exists for methanol as will be discussed in Section 5-3.

These distribution costs are average for the U.S. during the first half of 1973. An analysis based on more recent data would be extremely complicated and misleading, due to two factors: (1) price increases allowed to dealers to maintain their overall profit in the face of reduced volume during shortages and (2) higher foreign oil prices resulting in wide variations of gasoline price, reflecting the percentage of foreign oil content in the gasoline.

5.1.9 Cost Projections: 1982-2000

The economics for shale derived fuels developed in the previous sections can be taken as typical of "steady-state" operation of the first generation of plants. Based on the timetable of the prototype leasing program, 1982 is taken as a reasonable date for these economics. As part of the study, however, an effort was made to predict changes in cost for the period 1982-2000, reflecting such things as new and improved technology. It was decided to choose 1990 and 2000 as the two dates for estimating such changes. The results of this projection are given below:

	$/MMBTU (1973 $)					
	1982		1990		2000	
	Gaso.	Dist.	Gaso.	Dist.	Gaso.	Dist.
At Refinery*	1.70	1.10	1.60	1.00	1.15	0.65
Distrib. and Marketing	0.95	0.95	1.00	1.00	1.00	1.00
At pump, ex tax	2.65	2.05	2.60	2.00	2.15	1.65

* Includes pipeline transportation of raw shale oil or syncrude to a Mid-West refinery.

For the 1982-1990 period, it was assumed that:

(1) The technology of retorting and upgrading would result in a 10% cost reduction. This is in line with the NPC prediction and reflects the fact that this technology is fairly mature. It is very likely that the location of the upgrading operation will move from the shale-mining area to the refining centers of the Mid-West or the Gulf Coast. This will affect water availability in the mining area, but will not significantly affect overall economics.

(2) A new pipeline system would have to be built to transport the syncrude (or mildly treated raw shale oil) to the refining center. This would increase pipelining costs ca. $.05/MMBTU over the cost of $0.10/MMBTU in 1982. This latter figure assumes that spur lines will be built to tie into existing pipelines which have spare capacity.

(3) No significant change would occur either in the refining of shale oil or in the marketing of the gasoline or distillate.

For the 1990-2000 time period, it was assumed that:

(1) The lease bonus payments would have a much smaller effect on project DCF return not only because the absolute payments would necessarily be smaller (leaner ores, more difficult recovery), but because

a growing industry would provide a larger output against which this payment would be debited. A $0.10/Bbl cost was assumed for the lease payment, rather than $0.62/Bbl in the 1982 base period.

(2) In situ retorting would be developed. Based on some very preliminary economics in (5-3), a cost of ca. $2.00/Bbl was taken for in situ retorted oil.

(3) Upgrading of the raw shale oil would be improved 25% over this period.

(4) No significant change would occur either in the refining of the shale oil or in the marketing of the gasoline or distillate.

Similar projections are made for coal-derived fuels in Section 5.2.6. The relative costs for the various fuels can then be assessed over the time frames of interest.

5.2 Hydrocarbon Fuels From Coal

5.2.1 Coal Mining

In 1973, the U.S. produced almost 600 MM tons of coal, divided about equally between production from surface and deep mines. National needs require coal production to expand rapidly. As discussed in Section 3, conversion to synthetic fuels could consume as much as 700 MM tons/yr. of coal by 1995. This will require very rapid development of surface mining in the West.

In surface mining, the overburden (ground cover) is removed to expose the coal seam. Two types of mining can be employed: contour mining and area mining. In contour mining, a series of pits is developed in the form of long, narrow strips, which follow the contour of the land. This method is used for mining hilly or steep terrain. Area mining is used for flat or slightly rolling areas, where coal seams lie relatively parallel to the land. The pits are designed in a strip, such that the overburden from each strip can be cast back into the previous pit. Area mining is employed in the Mid-West and Western states, whereas contour mining is used primarily in Appalachia.

Surface mining has been increasing because it offers better recovery, lower investment and operating costs, and requires less manpower than does underground mining. Surface mining recovers on the average of 85% of the coal, whereas underground mining yields only 50%. Manpower productivity is higher for surface mining than for the mining industry as a whole; i.e., in 1973, strip mining averaged 35 tons/man-day vs. 11.2 tons/man-day for underground mines. Present productivity estimates for new strip mines run as high as 60 tons/man-day.

The feasibility of surface mining depends on the stripping ratio -- i.e., the number of cubic yards of overburden to be removed to recover one ton of coal. In the Mid-West, this ratio ranges from 11:1 to 18:1, whereas the Western states offer a lower, more economical ratio on the

average of 6:1. In some areas, the ratio can be as low as 1:1. Because of the lower stripping ratios, high productivity, and abundance of reserves, the Western states are a promising source for the future supply of coal to the synthetic fuels industry.

Coal produced by underground mining in the Mid-West may increase, primarily for use in power plants, if problems with SO_x emissions can be overcome. It is also possible that some synthetic fuels plants will be built around this source of coal.

Underground mining methods can be classified into three main categories: conventional, continuous, and longwall. Most of the coal is mined by conventional or continuous mining. Both methods involve a room and pillar system as previously described for shale mining. Conventional mining involves a cutter, face drill, loading machine and blaster, whereas continuous mining performs all these operations with one machine. Continuous mining is on the increase as the trend toward automation grows.

In longwall mining, tunnels are driven through the four sides of the block of coal to be mined, thus isolating it. Slices are then made across the width of the block (300-800 ft) by a drum-type shearing machine moved along the coal face. The coal dug from the face drops to the floor where it is removed by a continuous conveyor. This method is becoming more important in the U.S. because it concentrates production in a smaller area, providing better productivity and ventilation.

The NPC has predicted that, in 1975, continuous mining will yield 65% of total underground production, longwall mining will grow to 5%, and conventional mining output will decline by 30%.

The projected growth in coal mining could be limited by various factors:

(1) Manpower: Concern has been expressed by a number of industry spokesmen that a shortage of both technical and non-technical manpower could severely hamper the long term growth of the coal industry. Efforts will have to be made to recruit personnel for the industry and to promote college programs in mining technology.

(2) Transportation: It is expected that the first generation of coal conversion plants will be located near the mines, so that only liquid or gaseous products will have to be transported to consuming areas. However, as the coal conversion industry matures, it may be necessary to consider plant sites away from the coal-mining areas. A likely driving force for such a shift would be the long-range availability of water (see below). Another is the problem of population growth. A large total conversion plant plus mine is expected to employ ca. 1300 people. This implies a total population of up to 20,000 people, including families, support activities, etc. (5-26).

At present, coal can be shipped most economically by unit trains, dedicated solely to coal transport, and capable of carrying up to 7,000 tons of coal. Two of these trains per day would be required to move the output of a large 5 MM ton/yr. surface mine. However, rail costs are escalating rapidly.

The alternative to unit trains involves slurry pipelines, in which a 50/50 coal/water slurry is moved to the conversion site. The economics of slurry pipelines developed to date indicate that this technique could be cheaper than unit trains for distances greater than 600-800 miles. (5-7) Slurry pipelines need water at the slurrying site but only about half as much as a conversion plant at the same location.*

(3) Legislation: A number of measures before Congress in early 1974, if passed, would have a severely inhibiting effect on the development of surface-mined Western coal. Of particular concern are provisions which would: (a) prevent surface mining on land for which the Government holds the mineral rights, (b) require land restoration to its exact original contour, and (c) assess a high levy on mined coal to finance the reclamation of "orphan lands" -- i.e., land mined in the past (primarily in Appalachia) without having been reclaimed according to present standards.

(4) Environmental Concerns: The major issues here are land restoration, water availability, and waste disposal. The Department of Interior estimates that about 35,000 acres of land would be disturbed in the West by 1985 due to the increased surface mining associated with coal conversion projects. Costs of land reclamation have been estimated by NPC to vary between $0.01 and $0.20/ton depending on the yield of coal per acre and the terrain. An average reclamation cost of $0.10 - 0.15/ton seems reasonable. However, as in the case of shale, the economic and technical feasibility of large-scale reclamation operations will have to be demonstrated.

As part of the reclamation system, water will have to be provided to aid in revegetation and to prevent erosion. In general, the availability of water in the coal-mining regions of the West appears to be greater than in the shale-mining regions. However, a detailed assessment of water availability is not yet complete. It is part of on-going planning programs -- such as the "Northern Great Plains Resource Program" (NGPRP) organized by the Federal Government.**

---

* e.g. Early in 1974, the Wyoming legislature passed a bill permitting construction of a slurry pipeline to ship coal from northeast Wyoming to south-central Arkansas, a distance of more than 1,000 miles. The project envisions the use of undrinkable saline water obtained from wells nearby the coal deposit. The pipeline would carry about 25 million tons of coal annually.

** Involving the Depts. of Interior and Agriculture, EPA, and the states of Montana, Nebraska, N. & S. Dakota, and Wyoming.

Waste disposal during surface mining involves management of effluents including slit, acid mine waters and dust. Techniques are available for handling such wastes, but they have to be demonstrated in large commercial operations.

Mining costs and investments are briefly summarized in Appendix 9. As discussed later in the section on coal liquefaction economics, a coal cost of $3/ton was assumed for surface-mined coal to be used in the first generation liquefaction plants. This represents coal reserves already owned by potential producers.

5.2.2 Coal Liquefaction*

Producing a high yield of clean liquid fuel from coal requires several conditions. Severe processing (combination of pressure, temperature, and time) is needed to break down the high molecular weight coal into smaller fragments. Large amounts of hydrogen are required to increase the hydrogen to carbon ratio to levels more typical of liquid fuels, and to react with impurities such as sulfur and nitrogen so they can be removed more easily from the system as gaseous hydrogen compounds (i.e., H_2S and NH_3).

Minerals, in the form of ash, are also present. This mineral matter includes silicon, aluminum, iron, calcium, sodium, titanium, and other elements. This material must also be removed to make a suitable clean liquid fuel.

In general terms, there are three levels of processing severity used to derive liquid fuels from coal. The least severe approach is moderate to high temperature pyrolysis. Heat is used to drive off or "distill" the volatile portions of the coal, but without adding hydrogen.

A second level of severity uses both heat and pressure. The coal is processed under high pressure at moderate temperatures and in the presence of hydrogen. Volatile matter is driven off and portions of the coal molecule are broken down. Hydrogen is added and combines chemically with some of the carbon to form hydrocarbons with molecular weights lower than the original coal molecules. This general approach is usually described as coal liquefaction.

Finally, a third level of severity is to convert the coal molecule into hydrogen and carbon oxides through very high temperature processing and then to catalytically recombine the hydrogen and carbon oxides into hydrocarbon materials. This approach incorporates coal gasification with steam and oxygen followed by the Fischer-Tropsch synthesis reaction to produce the liquid hydrocarbons.

---

* A brief summary of coal liquefaction technology was given in Section 4.3 (Table 4-7) as part of the initial fuel screening.

A brief review follows of some of the processes for producing clean liquid fuels from coal, identifying those which are particularly suitable for making automotive transportation fuels.

5.2.2.1 Pyrolysis

The schematic drawing on Figure 5-8 illustrates the general process steps in coal pyrolysis. Coal is crushed to the particles size needed. Then, in the pyrolysis step, heat is applied to drive off water, gases, and liquid hydrocarbons. The oil is recovered and sent to hydrogenation for upgrading to either fuel oil or synthetic crude. Gas is also recovered, scrubbed of contaminants, and made available for use as plant fuel, hydrogen plant feedstock, or for sale as a by-product. The char remaining after pyrolysis is available for sale as a high-BTU solid fuel.

Several pyrolysis processes are currently under development. These include the FMC Corporation COED process (Char Oil Energy Development), The Oil Shale Corporation (TOSCO) process called TOSCOAL, and the Garrett Research and Development process. Also, there is the Lurgi-Ruhrgas process which has a single small commercial operating plant.

Pyrolysis processes are suited primarily for the production of heavy fuel oils and particularly of chars. The yield of oil is only about 10-20 wt. % on dry coal, and its quality is such that severe upgrading is required in order to make a satisfactory transportation fuel.

5.2.2.2 Hydrogenation

The second level of processing severity to convert coal into liquids involves the chemical reaction with hydrogen at high temperature and high pressure. The broad range of conditions at which liquefaction has been tested runs from 750°F and 300 psig up to 900°F and 10,000 psig. Processes currently under development generally involve operation below 5,000 psig.

The general process scheme for coal liquefaction is shown in Figure 5-9. Prepared coal is mixed with an internally-generated slurry oil and transported to the liquefaction reactor. In the reactor, coal is liquefied in the presence of hydrogen. In the solids separation step, unconverted coal and ash are removed. Gases are recovered, sent to clean-up processing, and then used for sales or plant fuel. Liquids are sent to upgrading for futher removal of contaminants (sulfur, nitrogen) and to increase their hydrogen content. Hydrogen manufacture is another basic step in the overall sequence.

On the bottom part of Figure 5-9 are listed the different methods used in various processes to carry out the basic steps. In liquefaction, the hydrogen can be provided through the use of a hydrogen donor solvent, or by direct hydrogenation, either with or without a catalyst. For solids separation, the methods have included distillation, coking, and the use of hydroclones, filters, and centrifuges. In upgrading, catalytic fixed beds

FIGURE 5-8

GENERAL SCHEME FOR COAL PYROLYSIS

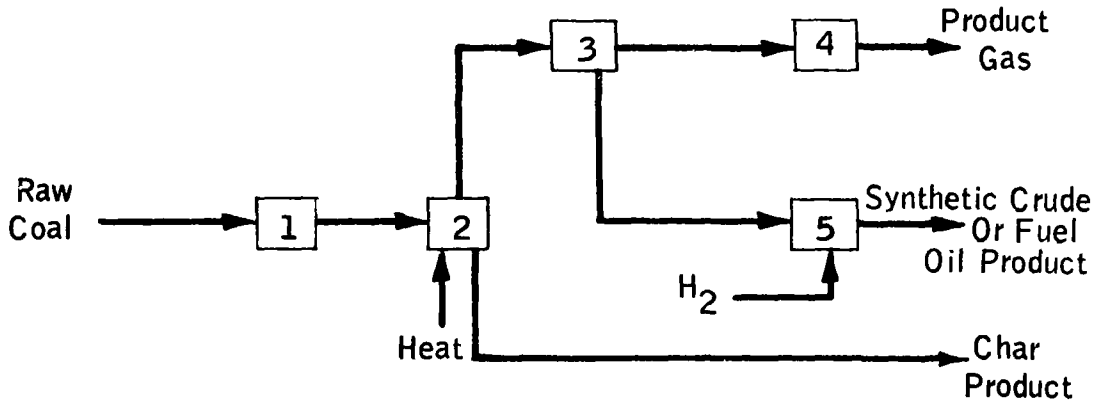

Process Steps

1. Coal Preparation (Crushing)
2. Pyrolysis Step
3. Oil Recovery
4. Gas Scrubbing And Processing
5. Liquid Upgrading

FIGURE 5-9

GENERAL SCHEME FOR COAL LIQUEFACTION BY HYDROGENATION

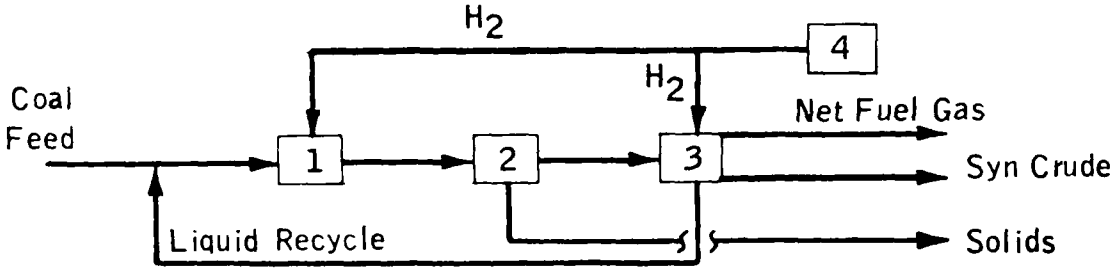

Alternative Processing Steps

1. Liquefaction
   - + H_2 Donor Solvent
   - + Direct Hydrogenation
     - - Catalytic
     - - Non-Catalytic
2. Solids Separation
   - + Distillation
   - + Coking
   - + Hydroclones
   - + Filters
   - + Centrifuges
3. Upgrading
   - + Catalytic Fixed Bed
   - + Catalytic Ebullating Bed
4. Hydrogen Manufacture
   - + Steam Reforming
   - + Partial Oxidation
   - + Steam-Iron
   - + Gasification Of Coal And/Or Char

and catalytic ebullating beds* have both been used. Hydrogen can be manufactured by steam reforming, partial oxidation, the steam-iron process, and the gasification of coal or char.

Several U.S. companies have been doing research work on coal liquefaction processes. The more publicized programs include those by Consolidation Coal Company, Pittsburg and Midway Coal Company, Hydrocarbon Research Incorporated, U.S. Bureau of Mines, and Exxon.

Consolidation Coal Company, under sponsorship of the Office of Coal Research (OCR), has done major work on a donor solvent process (5-8). This process operated mainly at about 350 psig and 800°F in the liquefaction step. Filters, hydroclones, and coking were employed for solids separation and a catalytic ebullating bed system was used for hydrogenating the solvent and product oils. The products include hydrocarbon gases, liquids, and a bottoms product consisting of unconverted coal and ash. The bottoms product could also contain some high boiling liquids, depending on the solids separation technique used.

Recently, Old Ben Coal Company (an affiliate of Standard Oil of Ohio) proposed a $73 MM, 5-year program (5-9) to construct and operate a 816 T/D donor liquefaction plant that could produce either a solvent refined coal (like the Pittsburg and Midway Coal Company process described below) or a distillate synthetic crude. Support of the program by a large group of industrial companies as well as the Electric Power Research Institute and the OCR is being solicited.

The Pittsburg and Midway Coal Company (PAMCO), (an affiliate of The Gulf Oil Corporation), who are also working under OCR sponsorship, have made bench scale studies on a non-catalytic, direct-hydrogenation liquefaction step at about 1,000 psig and 850°F (5-10). Hot, rotary filters are used to separate the residual solids. The main product is a low ash, partially desulfurized, and high-melting-point (350°F) solid fuel which is called "solvent refined coal." In addition, gas and some lighter liquid hydrocarbons boiling in the naphtha range are produced.

Hydrocarbon Research Incorporated (HRI) has worked mainly on a high severity catalytic system which is called H-Coal (5-11). The liquefaction is carried out in an ebullating-bed reactor which contains coal, catalyst, product liquids and gas, and hydrogen in a mixed condition at about 3,000 psig and 850°F. For solids separation, a combination of vacuum distillation plus coking as well as hydroclones, filters, centifuges and a solvent precipitation method were investigated. Since 1971, HRI carried out bench scale and pilot plant work which included operating a 2.7 T/D process development unit. Based on this work, HRI is proposing to build and operate a 226-635 T/D experimental plant.

* A reactor in which the catlyst is dispersed or fluidized in a liquid (as opposed to gas fluidization).

The U.S. Bureau of Mines has been studying a different type of catalytic reactor (5-12). The approach has been to use a fixed bed of catalyst operating at high pressures of up to 4,000 psig. A rapid, turbulent flow of hydrogen is used to force a coal slurry through the catalyst bed. A 5-10 lb/hr pilot plant has been operated to test the feasibility of this process.

Exxon is also studying coal liquefaction, including operation of a 0.5 T/D pilot plant. The Exxon process uses a solvent which donates hydrogen to the coal. It also involves a catalyst external to the liquefaction reactor. The process can produce either a low sulfur fuel oil or a synthetic crude oil that can be processed by conventional refining techniques. Several types of coals have been successfully tested. In late 1973, Exxon announced plans for an accelerated two-phase program to complete the process development work. Phase I consists of additional laboratory and engineering work plus the design of a large 200-300 T/D pilot plant to be completed in 1975.

5.2.2.3 Fischer/Tropsch

The most severe processing approach for making liquid hydrocarbons from coal is the combination of coal gasification to produce a synthesis gas followed by Fischer-Tropsch synthesis to catalytically convert the hydrogen and carbon oxides in the synthesis gas to liquid hydrocarbons. This process sequence has been demonstrated commercially in South Africa by SASOL (5-13, 5-14).

In the SASOL operation, coal gasifiers are used to convert the coal to a raw synthesis gas. This gas is sent to the Fischer-Tropsch reactors where the hydrogen and carbon monoxide are converted into hydrocarbon gases, liquid hydrocarbons and oxygenated hydrocarbons. SASOL uses two types of reactor systems for the hydrocarbon synthesis -- fixed and fluid bed. Their key features are shown in the following table:

	Circulating Fluid Bed Kellogg/SASOL	Fixed Bed Lurgi/SASOL
Pressure, psig	300	360
Temperature, °F	600	450
H_2/CO Ratio in Feed	2-3	1.5-2
Catalyst Type	Fused Iron With Low Surface Area.	Precipitated Iron With High Surface Area.
Major Liquid Product	Light Hydrocarbons (Gasoline)	Heavy Hydrocarbons (Fuel Oil and Wax)

Both employ iron-based catalysts with physical and chemical characteristics tailore to produce the desired products. Gasoline and lighter products are produced in the fluid bed process and heavier products from the fixed bed process. Process conditions and feed H_2/CO ratios are set to meet the desired product distribution.

5.2.3 Economics of Syncrude Manufacture From Coal

5.2.3.1 Process Selection and Economic Bases

It was decided to base this analysis on the HRI "H-Coal" process described briefly above. There are two reasons for this:

(1) Published process and economic data are adequate (5-11, 5-15 through 5-18).

(2) According to the NPC analysis the process was judged to show good promise for ultimate commercial development.

The Fischer/Tropsch process was not considered further because of its low thermal efficiency, the low yield of gasoline and distillate fractions relative to liquefaction, and the lack of detailed published data on investments and economics.*

The H-coal process was based on the use of Western coal, which, as discussed earlier, is found in thick seams close to the surface, making it economically attractive. This analysis further assumed that the coal will be liquefied near the mine and that the syncrude will be pipelined to refineries in fuel consuming areas. As pointed out previously, the transportation advantages of such a system have to be balanced against potential problems with water availability and the settling of unpopulated areas.

The liquefaction and hydrogen manufacturing balances described below are based on Navajo coal as described in documents submitted to the Federal Power Commission on the proposed El Paso Natural Gas SNG plant in the Four Corners area of New Mexico (5-19). The coal has the following properties:

Proximate Analysis	Wt. %
Dry & Ash Free (DAF) Coal	64.50
Ash	19.25
Moisture	16.25
Total	100.00

* As is pointed out in Section 8.1.2, however, Fischer/Tropsch could conceivably become an attractive alternate if a more selective, efficient process were developed (better catalyst?).

Component Analysis (DAF Coal)	Wt. %
Carbon	76.26
Hydrogen	5.58
Nitrogen	1.32
Sulfur	1.07
Oxygen	15.74
Trace Compounds	0.03
Total	100.00

Heat of Combustion	BTU/Lb.
Higher Heating Value	8714
Lower Heating Value	8370

Figure 5-10 describes the H-coal process in fair detail. Coal is crushed, dried, slurried with an oil recycled from the process, and fed to the H-Coal reactor. In the reactor, the slurry and hydrogen pass in upward flow through an ebullating catalyst bed. The coal is converted to liquid and gaseous products. The upward passage of the slurry and hydrogen maintain the catalyst in a fluidized state. Unconverted coal, oil and gas leave as overhead products, while the catalyst, which is coarser than the finely divided coal, is retained in the reactor.

The reaction products are separated by fractionation and absorption into streams of gas, naphtha, atmospheric and vacuum gas oils, and a vacuum bottoms, which contains heavy oil and unreacted coal. The latter stream is fed into a fluid coker which produces gas, gas oil and dry char. The coker gas oil and the H-Coal vacuum gas oil are fed to an H-Oil hydrocracker for conversion to lighter products. Plant gas is processed for removal of hydrogen sulfide and ammonia, and sulfur and aqueous ammonia are recovered. The naphtha, H-Coal atmospheric gas oil, and H-Oil liquids constitute the synthetic crude which is pipelined to refining centers for conversion to automotive fuels. The properties of this blend of fractions which constitutes the coal syncrude, is given in Table 5-3.

Hydrogen requirements (8500 SCF/B of coal liquids) exceed the potential which can be supplied by steam reforming the total gas made in processing. It was assumed that hydrogen would have to be made from coal since natural gas will not be available for that purpose. A Lurgi gasification step was therefore integrated into the scheme to provide all the hydrogen required.

Feed to the gasifier is coal plus char from the liquefaction plant coker. The gasifier operation is modified from conventional SNG production by providing for additional oxygen to increase hydrogen and carbon monoxide production at the expense of methane. The gasifier product undergoes the water gas shift reaction to convert carbon monoxide and

FIGURE 5-10

LIQUEFACTION BASED ON "H-COAL" PROCESS

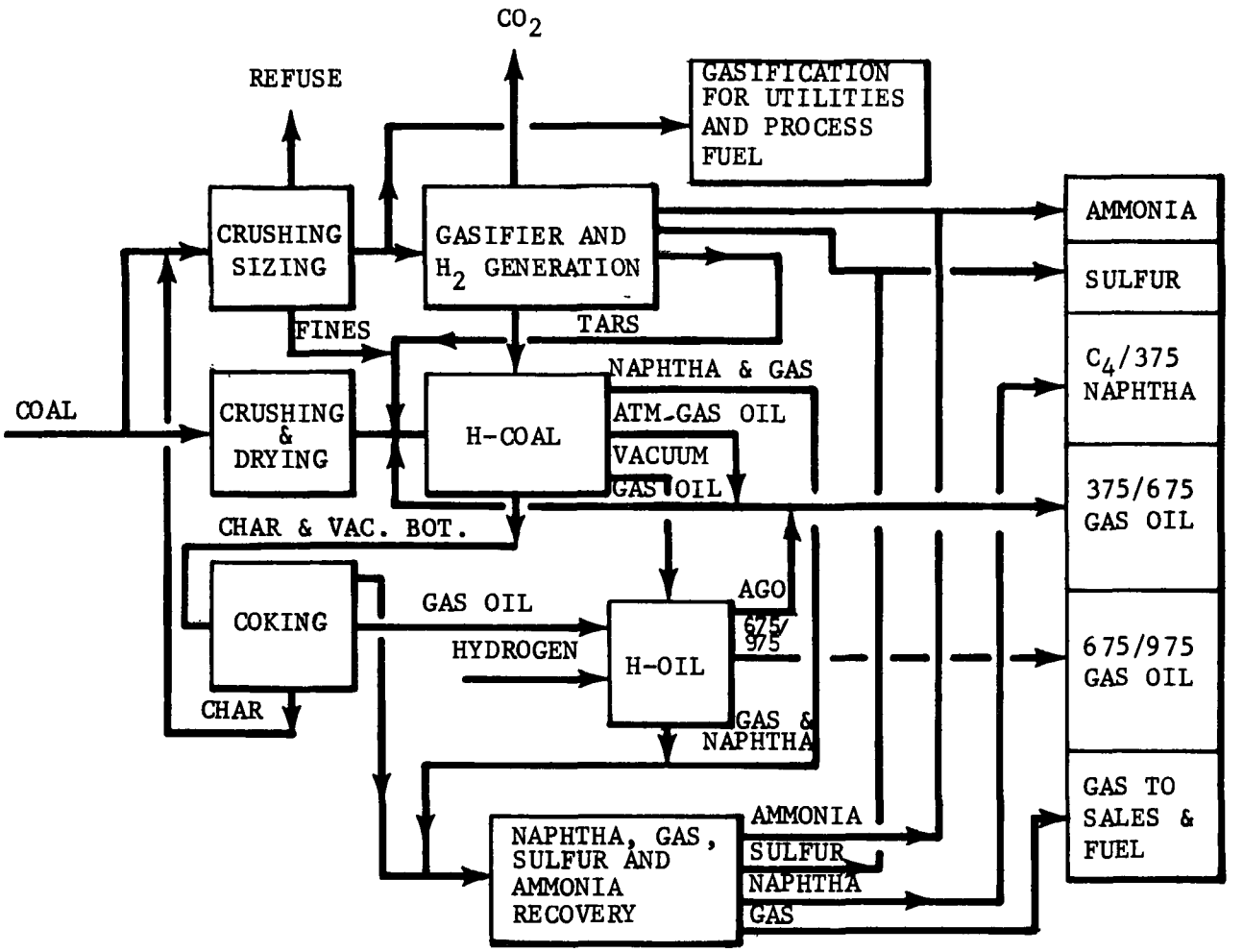

TABLE 5-3

PROPERTIES OF SYNCRUDE FROM H-COAL PROCESS

Boiling Range:	Initial/375°F	375/650°F	650/975°F	Total
Gravity, °API	53.0	23.2	3.5	32.4
Vol.% on Total	40.0	54.2	5.8	100.0
Analysis (Wt.%)				
Carbon	84.5	88.8	89.4	87.3
Hydrogen	13.6	11.0	10.2	11.9
Oxygen	1.7	--	--	0.6
Nitrogen	0.1	0.1	0.1	0.1
Sulfur	0.1	0.1	0.3	0.1

water to hydrogen and carbon dioxide. The gas is then purified by scrubbing out carbon dioxide, hydrogen sulfide and ammonia. Finally, the methanation converts traces of carbon oxides to methane. The product gas contains 95% hydrogen.

The Lurgi gasifier also produces by-product tars, phenols, etc. Anticipating that a very large volume of by-products will accompany future coal-based gas and liquids industries, it was decided that the by-products should be fed to the H-Coal reactor as a portion of the slurry. As a result, the hydrogen and liquefaction areas are well integrated: the char from liquefaction is fed to gasification, and the tar products from gasification are fed to the liquefaction plant, along with coal fines made in preparing feed for gasification.

A separate coal gasification section has been included to generate fuel gas for power and steam production. This avoids environmental problems associated with large-scale coal combustion to provide process heat and power. Coal is fed to a Lurgi gasifier which uses air rather than oxygen. After scrubbing, the fuel gas is burned in gas turbines which drive compressors or electrical generators. Heat in the exhaust gas is used to raise steam for steam turbine drives and power generation. Fuel gas produced in coal liquefaction is used as plant fuel and a small excess is sold.

The operations are summarized in the material balance shown in Table 5-4. The left hand column shows the inputs to and outputs from the coal liquefaction plant. The inputs include coal, coal fines from preparing coal for gasification, and naphtha, tars, and hydrogen from hydrogen production. Output from the liquefaction plant includes synthetic crude, gas, sulfur, ammonia and char which is sent to the Lurgi plant to supplement coal. The second column indicates the inputs and outputs from the hydrogen plant, and indicates that by-products from one operation become feedstock for the other. The last column indicates the net overall inputs and outputs from the complex. Coal is the sole input and synthetic crude the principal product with small volumes of gas, sulfur, and ammonia as by-products.

5.2.3.2 Investments and Operating Costs

Investments for producing synthetic coal liquids are summarized in Table 5-5. Investments for coal liquefaction are based on the numbers published in the NPC report. Adjustments were made for processing Navajo rather than Illinois coal, for scaling the plant from 30 to 100 MB/SD, and for escalation between 1970 and 1973. A 15% process contingency has been applied because the processes employed have not been demonstrated beyond the small pilot plant scale. A complete design for a commercial plant has not yet been undertaken.

The El Paso amended submission to the FPC (5-16) was used in developing investments for making hydrogen from coal. Adjustments were made to reflect changes required for producing a product which is primarily

TABLE 5-4

MATERIAL BALANCE FOR H-COAL
PROCESS AND HYDROGEN PLANT

	Liquefaction Plant	Hydrogen Plant	Total
Inputs			
Coal, (1) T/SD	33,201	26,623	59,824
Coal Fines, T/SD	2,200	(2,200)	--
Naphtha B/SD	2,191	(2,191)	--
Coal Tar, etc B/SD	11,079	(11,079)	--
Hydrogen, MMSCF/SD	855	(855)	--
Outputs			
Syn. Crude B/SD	100,000		100,000
Gas., 10^9 BTU/SD	186.0		186.0
Char, T/SD	10,820	(10,820)	
Sulfur, T/SD	152	203	355
Ammonia, T/SD	345	225	570

(1) Navajo Coal, properties cited previously.

Note: SD = Stream Day;

Output/Stream Day (SD) x Service Factor = Output/Calendar Day (CD or D)

TABLE 5-5

INVESTMENTS FOR PRODUCING 100 MB/SD[1] OF SYNTHETIC CRUDE FROM NAVAJO COAL

	MM $ (1973)	
Coal Liquefaction		
Coal Preparation	30.5	
Coal Hydrogenation	143.2	
Hvy. Gas Oil Hydrocracking	29.7	
Coking Vacuum Bottoms & Char	19.5	
Naphtha, Gas, Sulfur & Ammonia Recovery	27.7	
Offsites, Utilities, and Tankage	69.0	
Subtotal	319.6	
15% process contingency	47.9	
Total Liquefaction Section		367.5
Hydrogen From Coal		
Coal Preparation & Ash Disposal	32.4	
Gasification	83.6	
Water Gas Shift	30.3	
Gas Purification & Methanation	65.6	
Hydrogen Compression	42.3	
Tar Recovery	20.5	
Sulfur and Ammonia Recovery	9.0	
Oxygen Production & Air Compression	75.8	
Fuel Gas Production & Treating	35.1	
Utilities, Offsites, etc.	119.3	
Total Hydrogen Production		513.9
Total, ex contingency		881.4
15% Contingency		132.2
Total		1013.6

(1) 91,000 barrels per calendar day assuming a service factor of 0.91 as per El Paso proposal.

hydrogen, not methane. Among these adjustments were (1) decreasing primary methane yield, (2) increasing the water gas shift and acid gas removal, and (3) decreasing methanation. The El Paso submission was based on Navajo coal, which is also the coal used in this study. No process contingency was applied to the hydrogen production section because most of the processing proposed for the El Paso SNG plant has been commercially tested. A 15% project contingency for the entire project has been added. The total investment of just over 1 billion dollars is equivalent to $11,000 per daily barrel of syncrude.

The cost buildup for this operation is summarized in Table 5-6. A coal cost of $3/ton was assumed, as mentioned earlier. The financial bases are spelled out in Appendix 7.

The sensitivity of these costs to coal price and return level was calculated as follows:

	Syncrude Cost	
Coal Cost, $3/T	$/Bbl	$/MMBTU
5% DCF	6.40	1.16
10% DCF	7.97	1.44
15% DCF	10.70	1.94
Coal Cost, $5/T		
5% DCF	7.10	1.29
10% DCF	8.68	1.57
15% DCF	11.43	2.07

The cost of syncrude is very sensitive to return level, which reflects the large capital investment. The cost of coal has a significant but not a very large effect: a 67% increase in coal cost results in about a 10% increase in the cost of coal liquids.

In the section on shale liquids, the point was made that escalations in investment are likely to occur as more detailed designs are prepared based on an actual plant site, and as better data are obtained in semi-commercial equipment. A good example of this escalation involves the Lurgi gasification plant for the El Paso Burnham I complex, where the equipment is the same as required for the hydrogen production part of the H-Coal process. The total investment for the gasification plant increased over 100%, of which 70% was due to a better definition of the investment particularly the off-sites required. The cost of syncrude via the H-coal process would escalate roughly in direct proportion to the total investment increase, again reflecting the extreme degree of capital intensity of this operation. Since the H-coal process itself is still under development, and since various features of a hydrogen-from-coal process need to be demonstrated, it is likely that the investment will escalate before the first plant is built. With time, it is anticipated that technology will be developed which will lower costs, as projected in Section 5.2.5.

TABLE 5-6

OPERATING COSTS FOR PRODUCING 100 MB/SD
OF SYNTHETIC CRUDE FROM NAVAJO COAL

	MM $/Yr. (1973)
Liquefaction(1)	
Wages and Salaries(2)	11.7
Repair Materials (2% of Investment)	8.5
Supplier Taxes, etc. (3.5% of Investment)	14.8
Catalyst and Chemicals	9.8
Other Costs	2.3
Hydrogen Manufacturing	
Wages and Salaries	15.0
Repair Materials (2.25% on Investment)	13.3
Supplies, Taxes, etc. (3.5% on Investment)	20.7
Chemicals and Catalyst	4.3
Subtotal Manufacturing Costs	100.4
10% DCF return (0.215 annual capital recovery factor)	217.9
Coal at $3/Ton (19.8 x 10^3 tons/yr)	59.4
By-Product Credits	
Sulfur 117 x 10^3 Long Tons/Yr @ $15/LT	(1.8)
Ammonia 184 x 10^6 Tons/Yr @ $50/Ton	(9.5)
Fuel Gas 61.7 x 10^{12} BTU/Yr @ $1.65/$10^6$ BTU	(101.6)
Net Cost for 33.215 x 10^6 Bbl/Yr	264.8, call 265
$/Bbl 7.95	
$/MMBTU 1.45	

(1) Utilities included in hydrogen manufacturing.
(2) Base Wage Rate - $5.57/hr plus 40% benefits.
(3) Contained ammonia in 20% aqueous solution.

5.2.4 Syncrude Refining

Appendix 8 gives details of the refining study for coal and shale syncrude. The key parameters of the coal refining study are very similar to those spelled out for shale refining in Section 5.1.7, with one important difference. Coal syncrude is more aromatic (hydrogen-deficient) than shale syncrude. It therefore requires substantially more hydrogen in refining, based on conversion by hydrocracking rather than simple catalytic cracking. In general, coal syncrude requires more severe processing, which would be more expensive.

Neither coal and shale syncrude, however, contain high boiling fractions (975+°F material), thereby eliminating the need for bottoms conversion processes. The simple processing scheme mentioned earlier with regard to shale oil refining (Fig. 5-5) applies to coal refining as well. In the case of coal, it is possible to achieve a 1:2 split between distillate and gasoline with prudent refining practice. The refining costs for this case, and for the case of converting the crude essentially 100% to gasoline, are as follows:

Auto. Fuel Product:	Gasoline Only		Distillate**	
	$/Bbl*	$/MMBTU	$/Bbl	$/MMBTU
Syncrude	7.85	1.58	8.32	1.49
Refining				
ex. Fuel	2.44	0.49	1.12	0.20
Fuel at $6/B (ca. $1/MMBTU)	1.14	0.23	0.19	0.03
Total	11.43	2.38	9.63	1.79
Lower Heating Value, MMBTU/Bbl.	4.95		5.58	

* Cost is $/Bbl product; corresponds to coal syncrude at $7.95/Bbl.
** Co-product with gasoline.

The gasoline produced by this refining scheme has a 92 Research Octane Number. As was pointed out in the shale refining discussion, an increase to 96 RON would incur about a 13¢/MMBTU (1.5¢/gal.) additional processing cost.

The Cetane Index* of the coal distillate is predicted to be 35-38. This is too low for use as an automotive diesel fuel, assuming that the Cetane Index correlation holds for coal-derived distillates. A simple way

*Cetane Index is based on a correlation of API gravity and mid-boiling point with the measured Cetane Number of many petroleum fractions and distillate diesel fuels.

to circumvent this problem would be to use a blend of coal distillate with shale or petroleum-derived distillates. Alternatively, it is possible to use Cetane Number improvers, such as amyl nitrate, or, perhaps, even to hydrogenate or hydrocrack the coal distillate in an attempt to increase its Cetane Number. This last route is expected to be quite expensive, on the order of $3/Bbl or $0.50/MMBTU. Of course, a more general approach is simply to use the coal distillate in applications other than diesel fuel, where Cetane Number is irrelevant.

The following table summarizes the economics on the basis of capital investment per unit product:

	$/B/D	
Auto. Fuel Product:	Gasoline Only	Distillate Plus Gasoline
Syncrude*	11,000	11,630
Refining	2,550	1,270
Total	13,550	12,900

* Based on syncrude at $11,140/B/D.

5.2.5 Distribution and Marketing

It was assumed that the distribution system for coal-derived gasoline and distillate would be completely analogous to that for petroleum fuels, as described in Section 5.1.8. The costs of distribution were, therefore, taken at $0.90-1.00/MMBTU, which is the equivalent cost for petroleum fuels.

5.2.6 Cost Projections: 1982-2000

The economics for coal-derived hydrocarbon fuels are felt to be optimistic costs for the first round of liquefaction plants which are expected to go on stream in the early 1980's. As was mentioned in Section 5.1.9 on shale fuels, 1982 was taken as the initial time frame for economic comparison. Projections for 1990 and 2000 were made, and are summarized below:

	1973 $/MMBTU					
	1982		1990		2000	
	Gaso.	Dist.	Gaso.	Dist.	Gaso.	Dist.
At Refinery	2.40	1.80	2.15	1.50	1.65	1.10
Distrib. + Marketing	0.95	0.95	1.00	1.00	1.00	1.00
	3.35	2.75	3.15	2.50	2.65	2.10

For the 1982-1990 period, it was assumed that:

(1) The cost of coal would increase from $3 to $5/ton. This reflects the fact that construction of new plants in this period will require the purchase of coal lands from private owners or the leasing of Government land and mineral rights. The value of this land is expected to be substantially higher than present values, leading to higher coal costs. As discussed in Section 5.2.3, the estimated change corresponds to a $0.13/MMBTU increase in syncrude cost.

(2) The cost of coal liquefaction would be 25% lower by 1990, due to improved technology. This corresponds to a $0.40/MMBTU reduction in syncrude cost.

(3) The cost of transporting syncrude from the liquefaction plant to the refinery would increase by $0.05/MMBTU over the $0.10/MMBTU base, due to the need to construct new pipelines. The lower figure assumes that initially spur lines will be built to tie into existing pipelines which have spare capacity.

(4) No significant change would occur in the refining of syncrude or in the marketing of gasoline or distillate.

For the 1990-2000 time period, it was assumed that:

(1) A further 25% reduction in syncrude cost due to improved technology.

(2) No further change in coal costs. This may be an unduly optimistic assumption, but there is no good basis for projecting cost changes beyond 1990.

(3) No change in syncrude refining or in marketing of the fuels.

5.3 Methanol From Coal

5.3.1 Process Description

Methanol can be produced from coal* via coal gasification followed by direct methanol synthesis from carbon monoxide and hydrogen. As

* It was mentioned in Section 3 that natural gas is a potential source of methanol for automotive use. Currently, however, the demand for domestic natural gas greatly exceeds the supply. Hence, there is no immediate likelihood that automotive methanol will be produced from this domestic resource. In the long run, it is conceivable that other forms of energy could displace sufficient gas from some of its present uses to make feasible the use of domestic natural gas as a feedstock for fuel methanol. This study merely notes this as a possibility but does not predict that it will occur. The source of methanol will not affect its performance as an automotive fuel.

summarized in Table 5-6, there are a number of coal gasification processes under development. There are three, however, which have been commercially proven: the Lurgi, the Koppers/Totzek, and the Winkler process.

In the Lurgi process, coal is gasified in a countercurrent moving bed reactor operating at 300-500 psig and at temperatures of about 1,450°F maximum (5-20). A drawing of the Lurgi reactor is given in Figure 5-11. It is mechanically complex due to the pressure operation and the rotating grate plus other internal moving parts. The temperature and pressure of operation favor the maximum direct formation of methane, which also results in the formation of liquids, such as tars and oils. The Lurgi process to date has only operated on so-called "noncaking" coals which, fortunately, include the Western sub-bituminous coals. A program is under way to adapt the Lurgi process to caking coals, such as Midwestern bituminous coals.

In the Koppers/Totzek (K/T) process, pulverized coal is partially oxidized with oxygen and steam at atmospheric pressure and a temperature of ca. 2,700°F (5-21). A drawing of a Koppers/Totzek unit is shown in Figure 5-12. At the high temperature, all gaseous hydrocarbons are decomposed, and the effluent of the reactor is CO, CO_2, and H_2. The K/T process is very versatile with regard to feedstock. It can process coals of any rank, as well as liquids and gases.

The Winkler process (5-22) employs a fluid bed of coal maintained by injection of steam and oxygen (see Figure 5-13). The gasification is in two steps for temperature control to avoid ash fusion. Like the K/T process, the Winkler process produces almost no methane. It can be operated at pressures up to 50 psig.

It was decided to base the economics of methanol production on the Lurgi process, both for the case where SNG and methanol are coproducts and for the case where methanol is the major product. The main reason for this is that considerable published information exists on the Lurgi process. Also it can handle the sub-bituminous coals of main initial interest for methanol production.

The K/T or Winkler processes appear to be suited to methanol production without coproduct SNG. However, not enough published information is available for a detailed economic analysis. From the information that is available, however, it appears that these processes have a low thermal efficiency and use large quantities of oxygen. Furthermore, low pressure operation would be an economic drawback if followed by methanol synthesis at 750-1000 psig.

The process scheme used in this study is summarized in Figure 5-14, which compares two flowsheets, one for the production of SNG only and the other for the production of methanol and coproduct SNG. The first steps are quite similar: coal preparation, coal gasification, adjustment of the H_2/CO ratio by CO shifting, and removal of CO_2 and H_2S. The major differences are in the position of the compression step and in the steps needed for synthesis of methanol and methane respectively.

FIGURE 5-11

LURGI PRESSURE GASIFIER

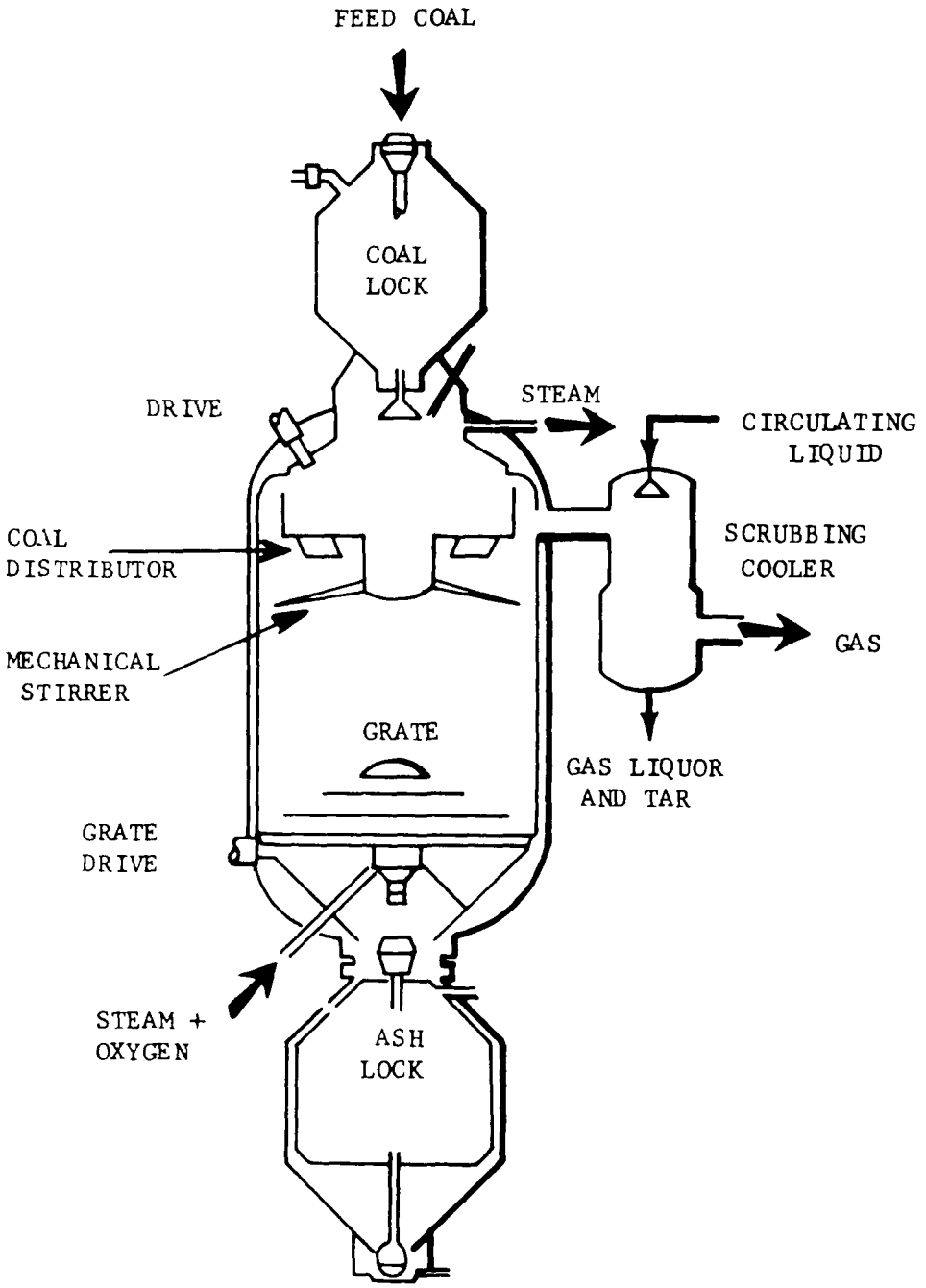

FIGURE 5-12

KOPPERS-TOTZEK GASIFIER

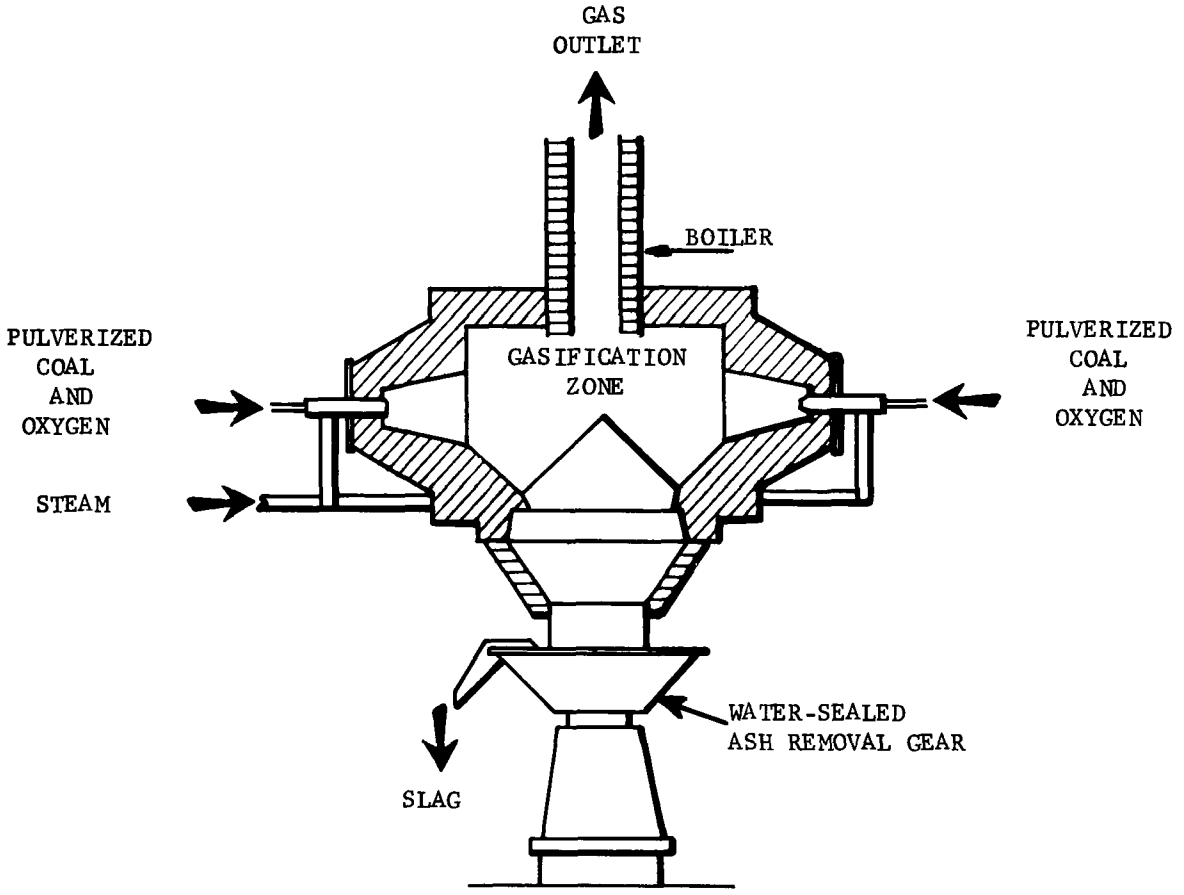

FIGURE 5-13

WINKLER GASIFIER

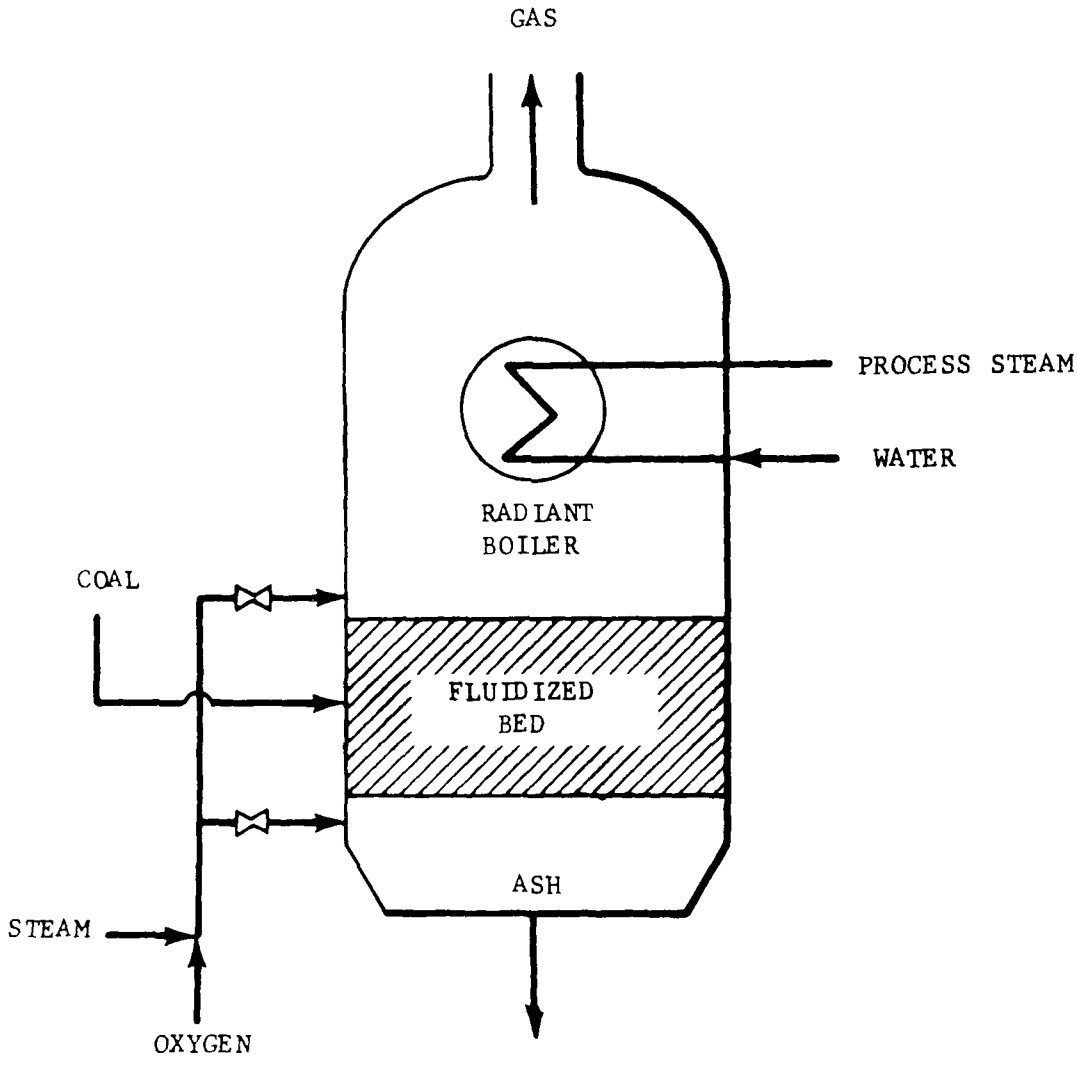

FIGURE 5-14

FLOW PLAN FOR METHANOL AS
A SNG PLANT COPRODUCT FROM COAL

SNG Only

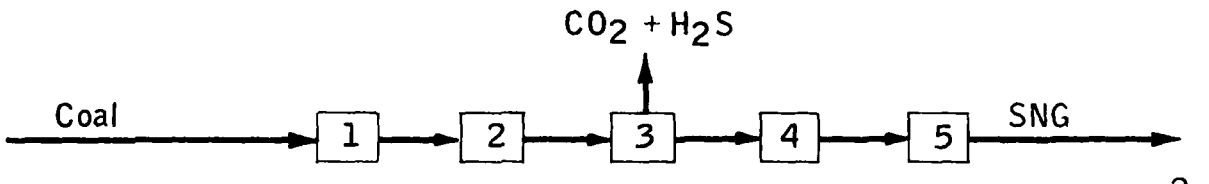

Methanol Plus SNG

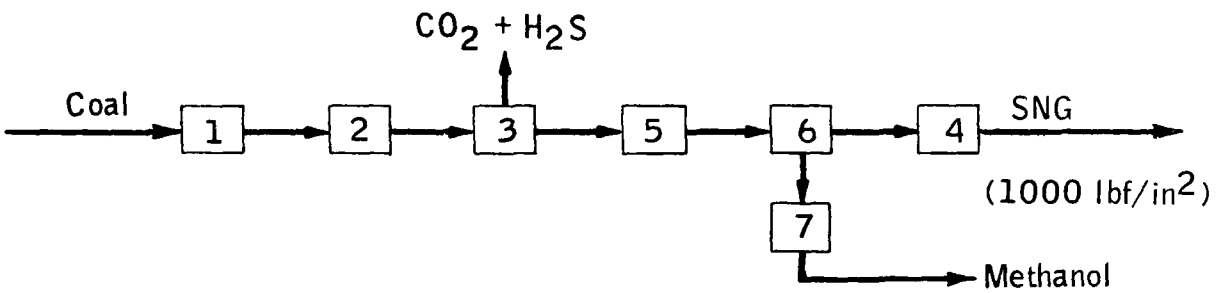

Processing Steps

1. Coal Preparation
2. Gasification
3. Shift And Purification
4. Methanation
5. Compression
6. Methanol Synthesis
7. Methanol Purification

The Lurgi gasifier produces an effluent containing CH_4, H_2, CO, CO_2, and H_2O. Sulfur will leave the reactor predominantly as H_2S. Ungasified coal and ash are drawn off separately from the gas stream, but fines must be recovered from the gaseous effluent after appropriate quenching.

The quenched converter effluent is first passed through a water gas shift catalyst bed where the H_2/CO ratio is adjusted to about 3/1 in order to allow subsequent methanation. Acid gases (H_2S and most of the CO_2) are next scrubbed out in the gas purification section, where heavier hydrocarbons are also removed by a combination of condensation and other physical separation methods.

In the methanator, CO and the small amount of CO_2 are converted over a catalyst to CH_4 and H_2O with the release of large quantities of heat. The product SNG is compressed and dried.

In the methanol flowsheet, the compression step is moved ahead of the methanol converter, since the methanol synthesis is very pressure sensitive. Also, since methanol is made from $CO + 2H_2$, while methane requires $CO + 3H_2$, less shifting and CO_2 scrubbing are needed in a coal gasification plant having methanol as a coproduct compared with a plant directed at a single (SNG) product. When methanol is produced, less methanation is, of course, required for a given size coal gasification unit, and whatever methanation is done entails a somewhat less strenuous heat removal problem than when SNG is produced.

The methanol facility is basically a reactor-condenser-separating unit, without the need for a recycle compressor. Several such units can be put in series to maximize the methanol yield.

The methanol product will be essentially dry, since there is little water in the high-pressure feed gas, and the only water produced in the reactor is derived from CO_2 which can be scrubbed out of the feed to any desired level. Consequently, for fuel purposes, the only product fractionation requirements are flashing to remove dissolved gases and simple distillation to remove small amounts of dimethyl ether which could lead to vapor pressure and safety problems.

By adjusting the type of catalyst and the reactor temperature profile, it is possible to suppress or promote the formation of higher alcohols as by-products. The recently announced "Methyl Fuel" process by Vulcan-Cincinnati (5-23) makes a product containing 10-15% higher alcohols. This technology is aimed primarily at large-scale conversion of foreign natural gas to methanol for importation. It could however be adapted to the coproduct SNG scheme.

5.3.2 Economic Basis

The coal gasification section of the process was analyzed based on the two references cited in Section 5.2 in relation to hydrogen from coal (5-18,19). As mentioned below, the revised El Paso economics which

were published after the study economics were developed* has necessitated a revision.

In order to bracket the range in methanol/gas yield from a given size of gasification unit, two cases were considered:

(1) High Direct Methane Yield

The yield basis, which was assumed to underlie the NPC study design, was arbitrarily taken as follows (based on general coal gasification experience):

Direct yield of CH_4 in gasifier effluent = 40% of ultimate CH_4 product

H_2/CO ratio in gasifier effluent = 2/1

CO/CO_2 ratio in gasifier effluent = 1.2/1

Shift requirements, CO_2 removal load, and methanator duty were estimated based on the above yield assumptions. The achievable methanol yield, after compressing the gas to about 1,300 psig, ahead of the converters, was assumed to be equivalent to commercial levels which allow a build-up of inerts (CH_4) in the recycle gas to a level of 20-35%. Overall, 23.5% of the fuel product effluent of this case was methanol, with 76.5% SNG corresponding roughly to a 1/3 ratio.

The rough material balance is shown in Table 5-7. It is interesting to note that the total energy output from the coproduct scheme is somewhat higher than that from the SNG-only case. The size of the methanol unit is 3,575 T/D (25,700 B/D). Considering that the heating value of methanol is only half that of a light hydrocarbon on a volume basis, this methanol unit is only equivalent to a 12,000 B/D petroleum refinery -- i.e., a relatively small and, hence, uneconomical unit.**

(2) Low Direct Methane Yield

Keeping the total coal feed to gasification unchanged from the NPC basis, the yield pattern was assumed to be changed to a much lower direct methane yield in the gasifier. This change was brought about by: (1) increasing the oxygen requirement (43% increase), (2) operating the unit at higher temperature and (3) making whatever revisions in reactor geometry necessary to undo the very intent of the conventional coal gasifier design (to maximize direct methane production). For purposes of

* Based on data in NPC's: "U.S. Energy Outlook - Coal Availability"; 1973.

** More precisely, the 12,000 B/D applies to the refinery yield of gasoline Typically, this quantity of gasoline would be produced by a refinery charging about 24,000 B/D of crude oil.

TABLE 5-7

SIMPLIFIED MATERIAL BALANCE FOR
METHANOL/SNG COPRODUCT PLANT

(a) High Direct Methane Yield

Basis: Per 100 mols of SNG Product

Component (dry basis)	Gasifier Effluent	No Methanol Coproduct			Methanol Coproduct			
		Shift Effluent	CO_2 Scrubber Effluent	Methanation Product	Shift Effluent	CO_2 Scrubber Effluent	Methanol Effluent	Methanation Effluent
CH_4	40	40	40	100	40	40	40	74
H_2	160	180	180	-	171	171	101	-
CO	80	60	60	-	69	69	34	-
CO_2	66.7	86.7	8	8	77.7	7	7	7
CH_3OH							35	

of the present study, it was assumed that these changes reduce direct methane yield from 40% to 5%. Compared to the yield pattern in the previous, high yield case, the 35 mols of methane/100 mols product not made directly were simply assumed to leave the gasifier in the partially oxidized form of equivalent ($CO + 2H_2$).

With a lower methane concentration in the gas, methanol represents a far greater proportion of the total plant product -- specifically, a split of 90/10 on a BTU basis between methanol and SNG. The methanol facility in this case is sized for 11,338 T/D or 81,400 B/D which is equivalent to a medium-size petroleum refinery. The simplified material balance for this case is shown in Table 5-8.

Originally, the NPC study investments were used as a basis for the gasification and gas treating portions in the present study. This information is shown in Table 5-9. The investments for the different parts of the plant were adjusted from the base case by means of the material balances to reflect the effect of coproduct methanol synthesis. These adjustments are shown in Table 5-10.

The methanol plant investments were prorated from curves in (5-24) and an estimated breakdown of conventional steam reforming/methanol plant investments according to the following:

Section	% of Investment
Feed Preparation and Steam Reforming	40
Process Gas and Recycle Compression	15
Synthesis Loop (ex Compression)	30
Two-Column Finishing	15
	100

Since the investments for the large methanol plants in the above reference have only a one-column finishing section, the numbers were adjusted to reflect this change when distributing the total investment among individual plant sections. Details for the methanol investment in the high and low direct methane cases are shown in Table 5-11.

As was mentioned in Section 5.3, the recent FPC submission by Stearns-Rogers on the El Paso gasification project showed much higher investments than the original costs given in the NPC study. Most of the change was due to a large increase in offsites and utilities and, of course, escalation over the three-year period 1970-1973. Also, the cost of the coal preparation facilities increased nearly four fold. These changes and the new basis, namely the 1973 El Paso FPC application + 15% contingency, are shown in Table 5-12.

TABLE 5-8

SIMPLIFIED MATERIAL BALANCE FOR
METHANOL/SNG COPRODUCT PLANT

(b) Low Direct Methane Yield

Basis: Same coal feed to gasifier as in Table 1

Component (dry basis)	Gasifier Effluent	Shift Effluent	CO_2 Scrubber Effluent	Methanol Effluent	Methanation Effluent
CH_4	5	5	5	5	8
H_2	230	231	231	9	-
CO	115	114	114	3	-
CO_2	66.7	67.7	6.7	6.7	6.7 (or less)
CH_3OH				111	

TABLE 5-9

INVESTMENT FOR 270 MM SCF/D 900 BTU/SCF GAS
COAL GASIFICATION PLANT (LURGI BASIS)

Basis: NPC 1973 Study: U.S. Energy Outlook--Coal Availability
(Noncaking Coal)

Total Investment, including working capital: $209 MM

By Sections	% of Investment	$ MM (1973)
Coal Handling	4	8.4
Oxygen Plant	25	52.2
Gasification	23	48.1
Water Gas Shift	6	12.5
Gas Purification	22	46.0
CO_2 Scrubbing	17.6	36.8
Oil Removal	4.4	9.2
Sulfur Recovery	4	8.4
Methanation Section	16	33.4
Methanation Step	13.8	28.9
Product Compression	2.2	4.5
		209.0

TABLE 5-10

ADJUSTMENTS TO COAL GASIFICATION INVESTMENTS
FOR COPRODUCT METHANOL CASES

(Based on NPC Report Investments)

Section	Proration Basis	Investment, $ MM (1973)		
			Coproduct Cases	
		Base Case	High Direct Methane	Low Direct Methane
Coal Handling	Coal Feed	8.4	8.4	8.4
Oxygen Plant	(Oxygen Rate)$^{0.8}$	52.2	52.2	69.6
Gasification	(Effluent)$^{0.7}$	48.1	48.1	53.3
Water Gas Shift	1/2 of investment constant 1/2 of inv. (shift load)$^{0.4}$	12.5	11.2	6.2
CO_2 Scrubbing	1/5 of investment constant 4/5 of inv. (CO_2 load)$^{0.5}$	36.8	35.3	33.3
Oil Removal	constant	9.2	9.2	9.2
Sulfur Recovery	constant	8.4	8.4	8.4
Methanation Step	(Methanation load)$^{0.5}$	28.9	21.7	6.5
Product Compression	2 units, 0.95 factor; and 0.5 index on H.P.	4.5	10.4	11.6
		209.0	204.9	206.5

TABLE 5-11

ESTIMATED INVESTMENT IN METHANOL FACILITIES

Basis: (5-23)

Case	High Direct Methane Yield	Low Direct Methane Yield
Methanol Rate, T/D	3,575	11,334
Estimate Basis, T/D	1 x 3,575	2 x 5,670
Conventional Plant, Onsite Investment		
$/T/D (1973)	11,000	9,600
$MM	39.3	103.4*
Coproduct Plant, Methanol Section Investment, $MM		
Synthesis Section	12.8	33.5
Finishing Section	3.2	8.4
Offsites, Utilities & Working Cap.	9.3	24.5
Total	25.3	66.4

* Allows for 0.95 factor for 2 identical units built in parallel.

TABLE 5-12

COMPARISON OF FPC AND NPC INVESTMENTS

Basis	NPC 1973 Report			1973 El Paso FPC Application + 15% Contingency		
Size of Plant						
SNG, MMSCF/D	270			288		
BTU/SCF	900			954		
10^9 BTU/D	243			275		
Plant Section	Investment $MM (1973)	% of Total	% of Onsites	Investment $MM (1973)	% of Total	% of Onsites
Onsites						
Coal Preparation	7.2		4	26.2	10	
Gasification	41.0		23	76.3	29	
Water Gas Shift	10.6		6	18.7	7	
Gas Purification	39.2		22	69.9	26	
Sulfur Recovery	7.1		4	9.4	4	
Methanation	28.4		16	30.1	11	
Oxygen Plant	44.5		25	33.3	13	
Total Onsites	178.0	85	100	263.9	100	60
Utilities and Offsites	31.0	15		173.7		40
Total	209.0	100		437.6		100

The "Base Case" investment in Table 5-10 was obtained by applying a 0.95 power to the plant capacity ratio (in 10^9 BTU/D), i.e.,

$$\text{"Base Case" Investment} = 437.6 \times \left(\frac{243}{275}\right)^{0.95} = \underline{\$389 \text{ MM}}$$

This gave the same result as applying an escalation factor of 1.238 for the 1970 to 1973 period to the onsites, adding incremental coal preparation facilities and allowing for the new offsite/onsite ratio of 40/60 vs. 15/85 before.

The high and low direct methane gasification plus corproduct methanol investments were then revised to reflect (a) the escalation from 1970-1973 (23.8% increase), (b) the $14.4 MM increase in coal handling facilities, and (c) the new offsite/onsite split of 40/60 vs. 15/85 in the NPC report. These revisions are shown in Table 5-13.

As mentioned previously in this section, a considerable quantity of by-products is made in the course of the Lurgi coal gasification. Most of these can be used as fuel in the process or as a potential source of liquid products. This material has been credited at $0.75/MMBTU, as shown in Table 5-14. Different fuel values can be assumed to obtain the sensitivity of methanol cost to by-product value.

Other details of the economic basis were the same as discussed for the other fuels -- e.g., financing on a 100% equity basis.

5.3.3 Cost of Methanol Manufacture

The cost of producing methanol from coal in a methanol/SNG coproduct facility was developed using the method in the NPC report as a basis, but revising the investment according to the latest information, as discussed above. The results are presented in Table 5-15 and indicate methanol costs of about 8.5-12¢/gal. (i.e., $1.50-2.15/MMBTU).

The NPC study had shown that with 15¢/MMBTU coal (3$/ton) and 13% capital charges, SNG could be synthesized at 76¢/MMBTU (high heating value). However, this has been adjusted as follows:

(a) The much higher investments discussed previously have been substituted.

(b) Both $3 and $5/ton coal (15-25¢/MMBTU) were used.

(c) A 10% contingency has been added to the coal feed and operating cost.

(d) A by-product credit of $0.75/MMBTU for the liquid products has been taken.

(e) Capital charges have been raised to 21.5% (equivalent to 10% DCF) to conform more closely to industry standards.

(f) Gas value is expressed in $/MMBTU lower heating value.

The "Base Case" in Table 5-15 produces only SNG and is used to price the SNG for all the coproduct cases. Depending on coal cost, SNG costs vary from $1.66-1.88/MMBTU from a 270 MM SCF/D facility.

The methanol costs for the coproduct cases were then derived by (1) estimating the necessary total product value needed to meet the capital charge (return) requirement for that case and (2) substracting the

TABLE 5-13

INVESTMENTS FOR COPRODUCT METHANOL/SNG PLANTS

Case	Investment, $MM		
		Coproduct Cases	
	Base Case	High Direct Methane	Low Direct Methane
Investment, based on NPC Report (see Table 5-9)	209.0	204.9	206.5
Apply 1.238 escalation factor to 1973	258.7	253.7	255.7
Add extra coal handling	14.4	14.4	14.4
Add methanol[1] (from Table 5-10)	-	25.3	66.4
Total, before offsite adjustment	273.1	293.4	336.5
Correct to new offsite basis (see Table 5-11); i.e., 40/60 split vs. 15/85	389	417	475

(1) This is a 1973 investment, and therefore needs no escalation.

TABLE 5-14

BY-PRODUCT CREDITS

(Basis: El Paso FPC Application)

Product	Quantity FPC	Quantity NPC	Assumed Value Per Unit	Assumed Value $M/yr.
Tar	239,250 GPD	211,600 GPD	12.9¢/gal., i.e., $1.50/MMBTU	28.6
Tar Oil	157,370 GPD	139,200 GPD		
Naphtha	74,900 GPD	66,240 GPD		
Crude Phenol	32,470 GPD	28,720 GPD		
Sulfur	167 LTPD	148 LTPD	$5/LT	0.3
20% NH_3 Solution	332,550 GPD	294,100 GPD	$50/ST NH_3	3.8
				32.7

For Low Direct Methane Yield Cases, the same by-product credit was assumed for the base case size plant, and triple this amount for the large unit.

GPD = gal/day
LTPD = long tons/day (The long ton is a standard unit in the sulfur industry; 1.0 LT = 1.12 ST.)

value of the gas coproduct as calculated using the SNG value from the appropriate "Base Case."

The first coproduct case studied, based on high direct methane production in the coal gasifier, can produce about 3600 T/D of methanol at 11-12¢/gal. Gas production is cut back to about three-fourths of the base case output. As mentioned above, the overall economics were evaluated on the assumption that the reduced quantity of SNG would be put into the product gas pipeline at the same price as the SNG from the base case.

When the direct methane production is severely reduced much more of the gasifier output can be diverted to methanol production. Methanol production increases to 11,338 T/D, or more than 90% of the plant's BTU output. The methanol cost is 12-13.5¢/gal. or $2.10-2.35/MMBTU.

It was pointed out before that an 11,300 T/D methanol plant is equivalent to a medium-size petroleum refinery (ca. 40,000 B/D gasoline). Increasing this to 100,000 B/D gasoline equivalent would lower methanol cost between 0.5-2.5¢/gal., depending on the assumed exponent used in scaling to the larger size. However, a methanol cost of 10-13¢/gal. does not appear to be unrealistic from "equivalent 100,000 B/D" units (actually making over 200,000 B/D methanol).

5.3.4 Economic Sensitivities

Table 5-15 demonstrates the effect of changing coal costs from $3-5/ton, which increases methanol costs 10-20%. The value of the liquid by-products from the Lurgi gasification also has a very significant effect on methanol costs. If the by-products are assumed to have a value of $1.50/MM BTU rather than $0.75/MMBTU, the methanol costs would decrease by about $0.20/MMBTU, or about 10%.

The effect of increased investment was also examined. For example, if the investment increases by 20%, the SNG cost in the base case (see Table 5-15) also increases by about 20% (noninvestment related costs tend to cancel each other out). In the coproduct case this means that the methanol cost also increases roughly by this amount. Again, as with the other fuels, the capital intensity of the operation is clearly demonstrated.

5.3.5 Distribution and Marketing

The marketing and distribution system for methanol is different from that previously discussed for petroleum, shale, and coal hydrocarbons in the following respects:

(1) Methanol does not require refining or upgrading, so that the output of the synthesis plant can be distributed directly to the market place.

(2) The low energy density of methanol relative to hydrocarbons means that roughly twice as much methanol (by weight

Table 5-15

ECONOMICS OF METHANOL/SNG COPRODUCT PLANT VIA COAL GASIFICATION

Case	Base Case		Methanol/SNG Coproduct: High Direct Methane Yield		Methanol/SNG Coproduct: Low Direct Methane Yield, Base Case Size		Methanol/SNG Coproduct: Low Direct Methane Yield, Large Size Plants			
SNG, MMSCF/D	270		200		22		65			
Methanol, T/D	-		3,575		11,338		34,000			
LHV, 10^6 MMBTU/yr.										
SNG	73.0		54.0		5.8		17.5			
Methanol	-		20.5		65.0		194.9			
Total	73.0		74.5		70.8		212.4			
Investment, $MM (1973)	389		417		475		1,144 (1)		1349 (2)	
Coal Cost, $/T	3	5	3	5	3	5	3	5	3	5
Manufacturing Cost, $MM/Yr.										
Coal Feed	22.1	36.8	22.1	36.8	22.1	36.8	66.2	110.4	66.2	110.4
Operating Cost	28.8	28.8	30.8	30.8	35.1	35.1	84.5	84.5	99.7	99.7
Conting. @ 10% Fd. + Op.Cost	5.1	6.6	5.3	6.8	5.7	7.2	15.1	19.5	16.6	21.0
By-Product Credit	-18.4	-18.4	-18.4	-18.4	-18.4	-18.4	-55.2	-55.2	-55.2	-55.2
Cap. Charges, @ 21.5% Inv.*	83.7	83.7	89.7	89.7	102.2	102.2	246.0	246.0	290.0	290.0
Total Product Value	121.3	137.5	129.5	145.7	146.7	162.9	356.6	405.2	417.3	465.9
(Gas Value, $/MMBTU)	(1.66)	(1.88)	(1.66)	(1.88)	(1.66)	(1.88)	(1.66)	(1.88)	(1.66)	(1.88)
Total Gas Value	121.3	137.5	89.7	101.7	9.6	10.2	29.1	33.0	29.1	33.0
Total Methanol Value	-	-	39.8	44.0	137.1	152.7	327.5	372.2	388.2	432.9
Methanol Value										
$/MMBTU (LHV)	-	-	1.94	2.15	2.11	2.35	1.68	1.91	1.99	2.22
¢/gal.	-	-	11.1	12.2	12.0	13.4	9.6	10.9	11.4	12.7

(1) Prorated from 11,338 T/D case using 0.8 power.

(2) " " " " " " 0.95 "

* Equivalent to 10% DCF.

FIGURE 5-15

POSSIBLE DISTRIBUTION SYSTEM FOR METHANOL

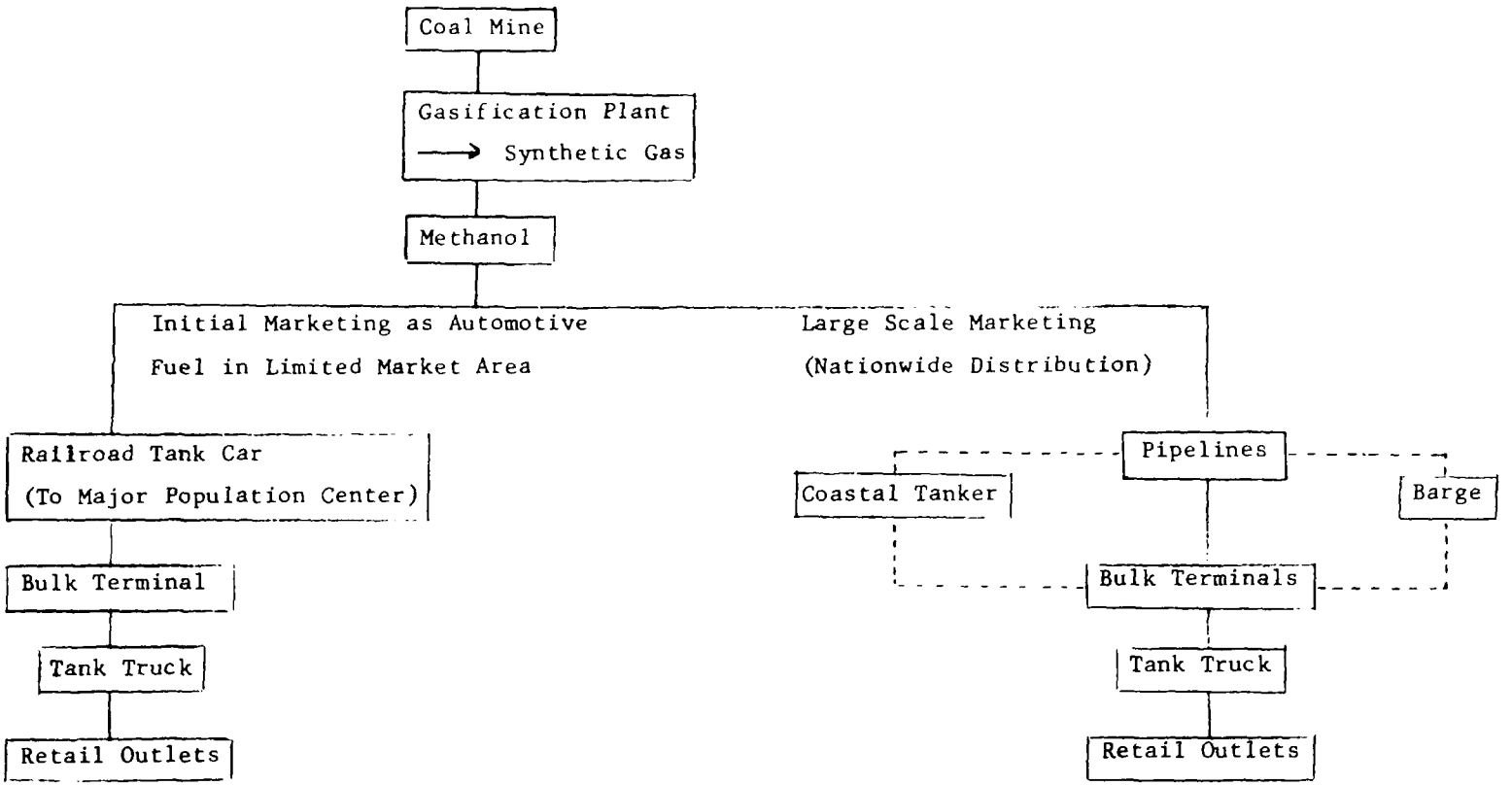

or volume) than hydrocarbon has to be distributed for the same energy output.

(3) Methanol is not very compatible with hydrocarbons, as discussed in Section 6.2, so that separate equipment will be required to move and store methanol.

The diagram on Figure 5-15 shows a potential distribution system for methanol for two time frames. Initially, methanol from the synthesis plant will be shipped by railroad tank car to bulk terminals near major population centers. When the market requirements grow sufficiently, pipelines will be constructed between the synthesis plants and the bulk terminals.

The underlying assumption in postulating this system is that methanol will be distributed separately from hydrocarbon fuels, even if a blend is to be used in the automobile. In such a case the blend will be dispensed at the service station by a mixing pump from separate storage tanks. The reason for choosing this route is that methanol/gasoline blends undergo phase instability and separation in the presence of small amounts of water (see Section 6.2). Unless evidence is obtained that this problem can be avoided, or that it does not lead to performance problems, even if it does occur, it will be necessary to avoid water pickup anywhere in the distribution system.

The modern gasoline distribution network contains many features to assure that water contamination is minimized. This is not a difficult objective to achieve since water is only very slightly soluble in gasoline (ca. 200 ppm at room temperature). This means that entrained water is the major problem in today's system. It can be minimized by proper storage tank design, good housekeeping and, when necessary, by providing for physical separation techniques. However, the greatest opportunity for water contamination occurs at the service station.

In marketing a methanol/gasoline blend, the distribution cost will have to reflect a penalty associated with keeping the system dry. It was assumed that this penalty is 40% on those components of the distribution costs which are concerned with equipment and operating procedures. This figure is not the result of a detailed systems analysis, which is beyond the scope of this study, but is based on experience with aviation fuels. For example, the distribution costs of aviation fuels, which have to be bone-dry*, are approximately 20% higher than the corresponding costs for motor gasoline. This difference was increased to 40% for methanol distribution to account for its much greater water affinity.

Another result of distributing methanol is the requirement for larger bulk storage equipment and more tank trucks compared to distributing the equivalent energy via gasoline. The optimum system has to be calculated

* To avoid the hazard associated with the formation of ice crystals under actual flight conditions.

for a given set of specific market parameters, but it will certainly involve a combination of larger tanks, both bulk and retail, and more frequent service station deliveries. The cost penalty associated with these modifications will be significant but not large -- in the order of 0.5¢/gal. gasoline equivalent, or ca. $0.05/MMBTU.

The next area to consider in marketing methanol in conjunction with gasoline involves the service station operation. As a result of marketing the two fuels the service station operator will have to make investments in tanks and mixing pumps. A simple procedure was outlined in Section 4.3 for estimating the increased retailing cost due to such investment. The added investment was taken at $5,000 for a typical service station, which is equivalent to ca. $0.05/MMBTU at 10% DCF.

There is a further consideration involving dealer margin which is calculated on a per gallon basis. The service station will deliver twice as much methanol as the gasoline it replaces. It is, of course, unrealistic to expect that the dealer would maintain his gasoline margin on the methanol he dispenses, which, in effect, would double his net income. On the other hand, it is unreasonable to set his margin simply on the basis of energy content, which would give him the same total income, even though he now pumps a much greater volume. In the absence of an economic analysis based on dealer attitude surveys, it was assumed that the dealer would require an increased margin, of ca. 10% on a BTU basis, above the capital recovery justified by his increased investment. This extra margin corresponds to $0.50-0.10/MMBTU and would be justified on the basis of the increased complexity of his operation.

The last area to consider is the distribution of methanol from the plant to the bulk terminal. As mentioned above, it is projected that unit trains will be used for this operation in the initial time frame (1982). The cost for this operation was estimated to be $0.60/MMBTU based on the energy equivalent of coal transportation, taken as $10/ton for a 1,000 mile trip.

With this background, it is possible to estimate the total marketing and distribution cost:

	$/MMBTU
1. Unit train to bulk terminal	0.60
2. Distribution and marketing	
• Gasoline equivalent	0.95
• Penalty for keeping system dry	0.20
• Larger tanks, lines; more frequent tank truck delivery	0.05
• Extra service station investment; extra margin	0.10
Total	1.90

5.3.6 Cost Projections: 1982-2000

The table below summarizes the cost projections for methanol for the period 1982-2000:

	1973 $/MMBTU		
	1982	1990	2000
At plant gate	1.95	1.90	1.55
Distrib. and marketing	1.90	1.50	1.40
At pump, ex tax	3.85	3.40	2.95

The following assumptions were made in projecting costs for the 1982-1990 period:

(1) Coal cost would increase from $3 to $5/ton. This is consistent with the assumption made in projecting the cost of coal-derived hydrocarbons.

(2) Methanol would be produced in plants using the low-methane approach -- i.e., maximize methanol production. Larger plants would be built on the order of 35,000 T/D (equivalent to 100,000 B/D gasoline). In order to take new and improved technology into account, the investment for such a plant is scaled up from smaller sizes using a 0.8 exponent, rather than 0.95.

(3) A pipeline from the Western coal regions, either to the Gulf Coast or to the Midwest, will replace the unit train method of shipment assumed for the first time period. The cost for this operation is roughly equivalent to pipelining hydrocarbons on a volume basis.

The following assumptions were made in projecting costs for the 1990-2000 period:

(1) A 25% reduction in the cost of methanol due to improved technology.

(2) Methanol will be used primarily unblended (i.e., "neat") so that extra precautions for keeping it dry can be relaxed. However, some measures will have to be taken to avoid batch-to-batch irreproducibility in the customer's tank due to significant variations in accidental water pickup.

5.4 Comparison of Costs

With the information developed in Sections 5.1-5.3, it is possible to make an economic comparison among the five fuels studied over the 1982-2000 time period. This comparison is given below in tabular form and is shown graphically on Figure 5-16.

FIGURE 5-16

COST PROJECTIONS FOR ALTERNATIVE FUELS

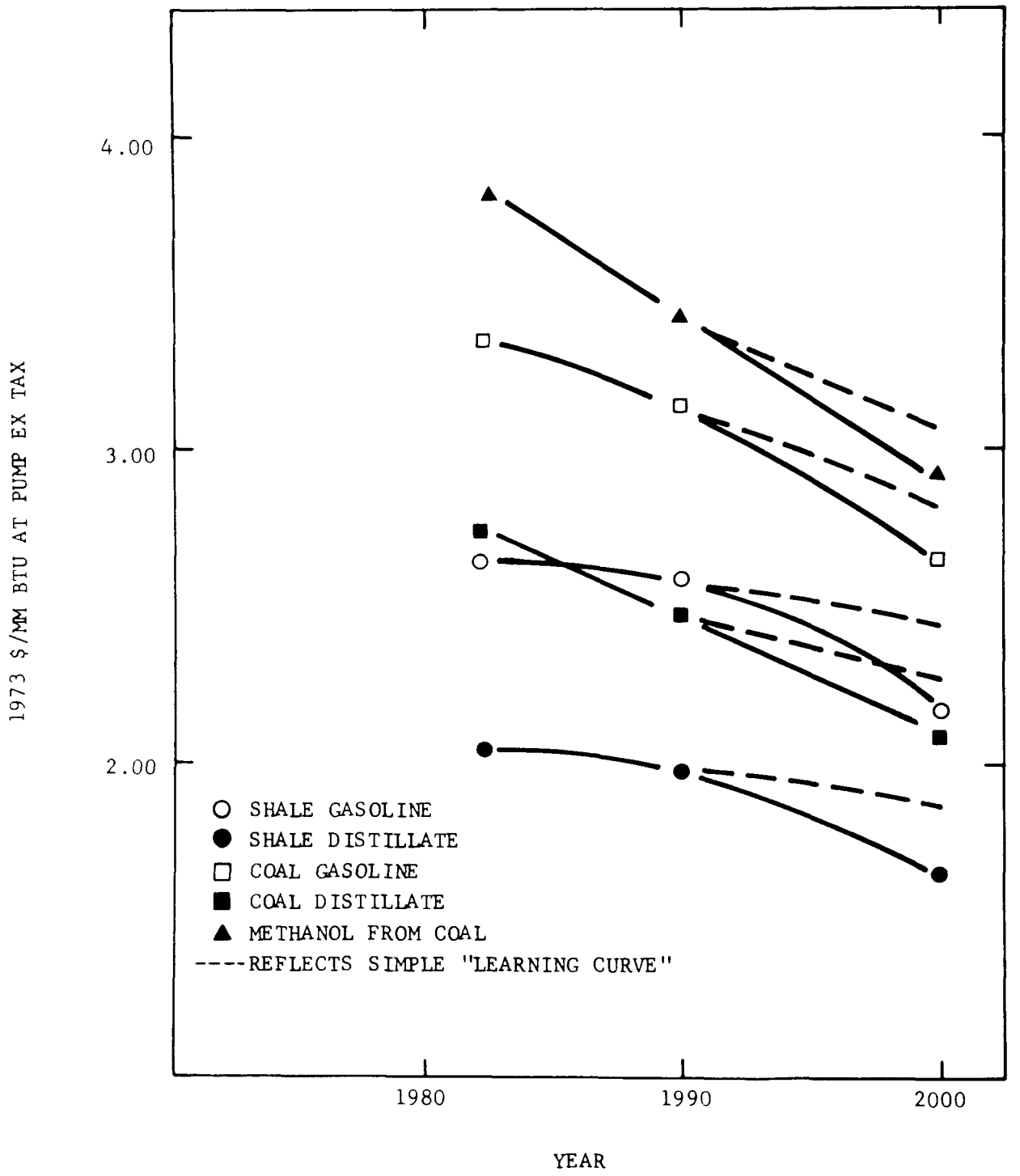

	1982		1990	2000
	$/MMBTU	¢/Gal.	— $/MMBTU —	
Shale				
Gasoline	2.65	31.5	2.60	2.15
Distillate	2.05	26.5	2.00	1.65
Coal				
Gasoline	3.35	39.5	3.15	2.65
Distillate	2.75	36.5	2.50	2.10
Methanol	3.85	22.0	3.40	2.95

Although the costs above 1973 $, ex tax at pump have been calculated to ± 0.05 $/MMBTU, the uncertainties in the numbers are significantly greater. No quantitative attempt was made to evaluate this uncertainty in view of the various approximations which were made in the course of the analysis. Realistically, the limits on these costs are estimated to be on the order of ± 10%.

Furthermore, there are good reasons to believe that all these costs, particularly those for 1982, are much more likely to be low than high. As was pointed out in the discussion, experience with large commercial ventures of a highly technical nature indicates significant cost escalation from early design to commercialization. The effect of such escalations was considered by applying process contingencies and by calculating the economic sensitivity to further escalations. However, since there are no compelling reasons to assume that such escalations are likely to affect one fuel more than another, it was decided to base the comparison on the base costs as calculated.

Another uncertainty involves the effect of new and improved technology. There is no way to assess the likelihood that the new technology will result in the cost reductions indicated. The curves on Figure 5-16 therefore show a band for each fuel in the 1990-2000 period. The upper limits of this band represent cost reduction due to evolutionary improvements -- the so-called "learning curve." The lower limits are due to the major cost reductions that were postulated, e.g., in situ shale retorting.

The comparison indicates that shale-derived fuels are expected to be cheaper than coal-derived fuels over the entire time frame of the study. Nevertheless, the development of shale fuels, as pointed out in Sections 3.3 and 5.1, will not simply be governed by these relative economics. The environmental, manpower, and resource limitations of a multi-million barrel per day shale industry are expected to be controlling. The impact of such a large shale oil industry has to be studied and the economics of production and manufacturing have to be adjusted to reflect various limiting factors.

The difference in cost between hydrocarbons and methanol from coal is of borderline significance. However, in the first time period, methanol is significantly more expensive. This reflects the fact that the methanol was assumed to be shipped to distribution points by train, until the production is large enough to warrant the construction of dedicated pipelines. Distribution costs are relatively more singificant for methanol than for the other fuels. This suggests that it would be more attractive in those applications where distribution costs are lower. In the automotive transportation sector, this implies large fleet accounts, as discussed in Sections 6 and 7. More generally, it implies that methanol should be considered in non-transportation fuel applications, such as in industrial fuels.

The curves on Figure 5-16 also indicate that distillates are cheaper than gasoline from the same source. It is important again to emphasize that this conclusion holds only for the "prudent" refining sequence described in Section 5.1 where distillate and gasoline are co-products. Attempts to increase distillate production at the expense of gasoline would result in much higher distillate costs.

Another criterion for economic comparisons is the capital intensity in the mining and manufacturing. A summary is given below:

Capital Intensity of Alternative Fuels

	Production of Syncrude*	Refining	Total
	1973 $/B/D		
Shale			
Gasoline	6,660	2,020	8,680
Distillate***	6,490	390	6,880
Coal			
Gasoline	11,600	2,550	14,150
Distillate***	12,200	1,270	13,470
Methanol	5,850(11,700)**		5,850(11,700)

* Production of syncrude includes mining investment at 5 $/T/yr.
** Number in ( ) on basis of equivalent BTU's.
*** Produced as co-product with gasoline.

In view of the great difficulty in analyzing typical investments for distribution and marketing, it was decided to eliminate this sector in the overall comparison. The relative capital intensities for the manufacture of the above fuels parallels the relative costs at the "refinery gate" This was expected since investment-related costs are the biggest component of manufacturing cost. Once again, it is necessary to point out that the lower investments for shale-derived fuels do not reflect potential limitations to the development of this resource. Within the limits of accuracy

of this analysis, methanol and coal hydrocarbons are approximately equal in capital intensity, when compared on the basis of equal energy content.

By way of comparison, the average capital intensity for U.S. petroleum production is about 9000 $/B/D, based on data by the Chase Manhattan Bank as reported in (5-25). Adding an average refining cost of ca. $2500/B/D gives a total for U.S. petroleum of about $11,500 $/B/D, which is intermediate between shale and coal.

Finally, a comparison was made of the relative efficiencies of manufacturing the various fuels. Such a comparison is given below in terms of the fraction of the energy in the crude recovered in the total product:

	Energy in Total Product/Total Input Energy	
	Gasoline	Gasoline & Distillate Co-Products
Shale		
Retorting	0.80	
Upgrading & Refining	0.70	0.82
Overall	0.55	0.65
Coal		
Liquefaction	0.75	
Refining	0.85	0.95
Overall	0.65	0.70
Methanol	0.65*	

* Assumes that by-products (tars, oils, etc.) from the Lurgi gasification are used as a source of process heat; if these cannot be utilized, the efficiency drops to 0.55.

The above tabulation does not include the energy efficiency in mining. This reflects a convention, used in all energy statistics developed by the Bureau of Mines, the Department of Interior, etc., by which energy used captively in producing coal, oil, and gas is excluded from primary energy input to the U.S. economy*. However, for completeness, mention should be made of coal and shale mining recoveries.

* It is appropriate to re-examine this convention in the context of increasing concern about energy conservation.

In the case of surface mining of coal, recoveries of 80-90% are reasonable with the higher recoveries probably achievable in thick seams of Western coal. If shale mining is carried out by the room-and-pillar technique, the recovery would be ca. 60%.

The data indicate that the energy efficiency for shale syncrude production is a little lower than for coal, reflecting losses during the retorting step. If the energy utilization in the retorting operation can be increased to 90%, as some industry experts hope, shale and coal syncrude would be equivalent on this basis.

Methanol production is roughly equivalent to coal liquefaction only if the liquid by-products during gasification can be utilized. An energy efficiency of 55% might be more typical of gasification processes which do not make unsable liquid by-products.

The data indicate that the co-production of distillate and gasoline from either coal or shale is more efficient than the production of gasoline alone. This conclusion holds for the case studied, where the ratio of gasoline/distillate is ca. 2/1. A modification to the present contract is now looking into the general question of petroleum distillates vs. gasolines on the basis of energy and crude utilization.

5.5 User Economics

Among the criteria used in the selection of the most promising future fuels (see Section 3.6) are the following:

1. Fuel costs
2. Efficiency of use
3. Compatibility with the vehicle
4. Impact on the environment in use
5. Toxicity and safety
6. Driver acceptability

For each fuel and engine combination, it is possible to quantify the compatibility, environmental impact, toxicity and safety aspects by estimating the cost of modifying both vehicle and engine to meet anticipated future standards. Fuel cost and efficiency of use can also be quantified and are important both to the individual driver and to the national economy. In fact, fuel cost has an impact on driver accepability greater than its relative contribution to total costs because it is a highly visible part of operating expense.

Driver acceptability, however, is a complex criterion that involves not only cost considerations but also various aspects of performance such as ease of starting, warm-up, acceleration, frequency of maintenance, durability, noise, odor, and styling. As mentioned in Section 4, it is difficult to express these aspects numerically but qualitative judgments can be made. In the following paragraphs the impact of the first five criteria mentioned above is quantified in terms of their effect on

the cost of owning and operating a passenger car. By carrying out such an analysis, it is possible to express the effect of all these factors in terms of a single number: the total cost of owning and operating a vehicle over the life of the car. This total cost is made up of two components: (1) the variable or operating cost consisting of fuel, oil, maintenance, repairs and tires, and (2) the fixed costs including depreciation, insurance, and license and registration fees.

This analysis was limited to shale and coal gasoline, shale and coal distillate, and methanol from coal. Although the intent of the analysis is a comparison of fuels and not of engines, three engine types were used in the comparison to explore how the fuel comparison might be influenced by engine types. The engine-fuel combinations used were:

1. an Otto cycle engine using gasoline or methanol.

2. a Diesel engine using distillates.

3. a gas turbine engine using distillates or methanol.

The fuel comparison was calculated for the three time periods mentioned earlier in this section: 1982, 1990 and 2000.

In calculating the total cost of operating an automobile, the variable costs were assumed to be related to the weight of the vehicle whereas the fixed costs are essentially determined by the vehicle retail price. As a basis of calculation, a 10-year life of the car was chosen corresponding to 100,000 miles of operation. By way of orientation, the figures below give an approximate magnitude of these costs for a gasoline powered 1973 automobile of 3500 lb. curb weight retailing at $3400 (5-27).

	$ (1973)
Operating Costs	
Fuel	2,850
Oil, Maintenance, Repairs, Tires	2,750
Fixed Costs	6,270
Total	11,870

As stated earlier, the motorist is very sensitive to increases in fuel costs but such increases are diluted by other operating costs, such that doubling the cost of the fuel increases the total operating cost only by about 25%.*

* The effect of car size, not considered here, is on both operating and fixed costs. In fact, the most obvious way to minimize fuel costs is to buy a small car.

The details of the calculations are given in Appendix 10. Table 5-16 compares life-time vehicle operating costs for the various fuels and engines. Relative rather than absolute costs are used in this comparison to focus on the fuel. For convenience, the relative costs are referenced to shale gasoline and distillate. It is not the intent of this analysis to explore operating costs as a function of engine type, since the vehicle and engine data, as explained in Appendix 10, are not of sufficient quality for this purpose. This comparison confirms first of all that changes in relative fuel cost are dampened by other non-fuel related costs, such that the total vehicle operating cost is not affected very much. The weight and cost changes occasioned by changes in fuel are quite small relative to base case costs. In order for fuel changes to have a really significant effect on total costs beyond one of direct fuel cost, the weight changes directly attributable to the fuel would have to be quite large. This could be the case for compressed or liquefied gases, such as ammonia, hydrogen, or methane.

Table 5-17 shows the relative fuel cost per mile for the various engines for 1982, 1990, and 2000. These relative costs are very close to the relative ex tax pump costs from Section 5, since, in this analysis, vehicle efficiency is determined by the efficiency of the engine, which is assumed not to vary significantly with the fuel.

TABLE 5-16

TOTAL COST OF OPERATING VEHICLE
AS A FUNCTION OF FUEL TYPE

Basis: 10-year, 100,000 mile life,
1982 projected fuel costs

Engine	Fuel	Relative Cost*			
		Fuel	O,M,R,T**	Fixed	Total
Otto Cycle	Shale Gasoline	[1.0]	1.19	2.85	5.047
	Coal Gasoline	1.25	1.19	2.93	5.365
	Methanol	1.52	1.22	2.85	5.59
Diesel	Shale Distillate	[1.0]	2.63	6.47	10.10
	Coal Distillate	1.31	2.65	6.65	10.61
Gas Turbine	Shale Distillate	[1.0]	1.68	4.07	6.75
	Coal Distillate	1.32	1.68	4.17	7.18
	Methanol	2.01	1.72	4.22	7.94

* The reference point for each engine type is indicated by [1.0]. Comparison among different engine types is not valid since the reference point for the various engines differs.

** Oil, maintenance, repairs, tires.

TABLE 5-17

PROJECTIONS OF FUEL COST PER MILE

Basis: 10-year, 100,000 mile life

Engine	Fuel	Relative Fuel Cost Per Mile*		
		1982	1990	2000
Otto Cycle	Shale Gasoline	1.0	0.95	0.78
	Coal Gasoline	1.24	1.16	0.99
	Methanol	1.51	1.37	1.17
Diesel	Shale Distillate	1.0	0.99	0.79
	Coal Distillate	1.27	1.23	1.0
Gas Turbine	Shale Distillate	1.0	0.97	0.78
	Coal Distillate	1.33	1.26	1.01
	Methanol	2.01	1.81	1.56

* The reference point for each engine type is indicated by 1.0
Comparison among different engine types is not valid since the reference point for the various engines differs.

EPA-460/3-74-009

6. PERFORMANCE OF FUELS BASED ON COAL AND SHALE

This section of the report discusses the performance of the shale and coal-derived fuels analyzed in Section 5. The focus is on the key properties and product quality considerations which affect vehicle performance. There are almost no data on the use of these fuels in internal combustion engines. As a result, it is necessary to infer performance characteristics from limited data on physical and chemical properties. This general approach was used in the preliminary analysis of the complete list of fuels in Section 4. It is important to realize, however, that the main value of such an approach is to identify areas where detailed, reliable information is needed.

6.1 Performance of Gasolines and Distillates From Shale and Coal

There are very few data in the literature on the product quality of shale and coal-derived fuels, based on the processes described in Section 5. It must therefore be stressed at the outset that inferences drawn from such limited information are tentative, subject to availability of more data.

6.1.1 Coal and Shale Gasolines

- Octane Number

Available data indicate that high octane gasoline fractions based on coal or shale syncrude will be quite aromatic. The information is presented in Figure 6-1 based on the data of Tables 6-1 and 6-2. The figure also shows a band, representing data for a petroleum naphtha catalytically reformed to various severities.

The limited data indicate that, regardless of source, the octane-aromatics curves tend to converge at octanes above 95. This simply reflects the fact that aromatics are the only compounds which are capable of achieving these (lead-free) octane levels under the processing conditions employed.

The points for shale gasoline represent three catalytically reformed hydrogenated naphthas. The data indicate a very steep octane response as low octane paraffins are converted to high octane aromatics.

The data for coal are not easy to interpret because they represent a mixture of results obtained from pyrolysis as well as hydrogenation processes. The former are highly aromatic due to the nature of the process. Pyrolysis also produces olefins, but these have been selectively hydrogenated as indicated by the data of Table 6-2. Gasolines made by coal hydrogenation are of more interest since this is probably the preferred future route for motor fuels. These products are rich in naphthenes (cycloparaffins) as well as aromatics. The naphthenes still have a

FIGURE 6-1

AROMATICS-OCTANE RELATIONSHIP
FOR SHALE AND COAL GASOLINES

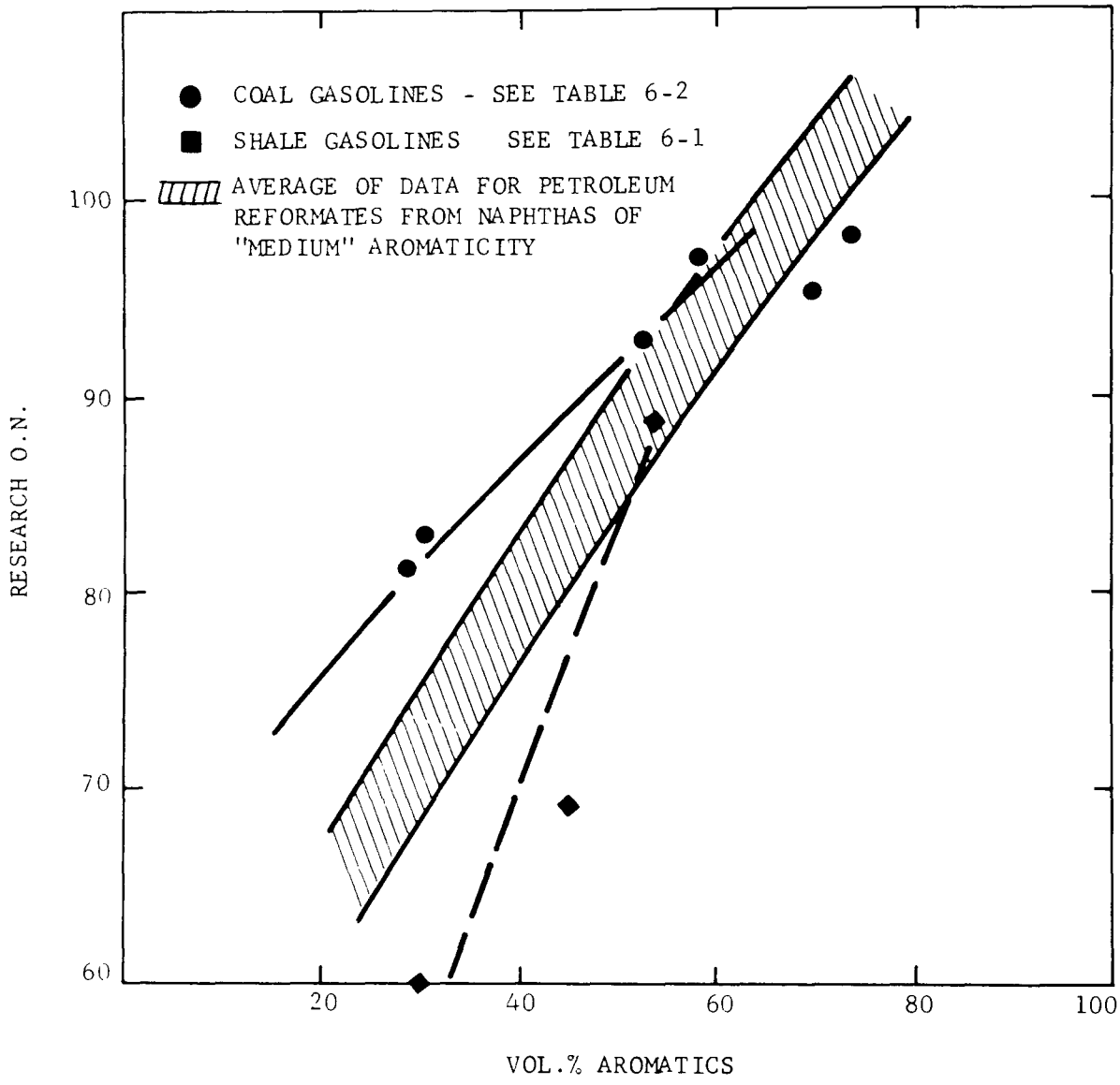

EPA-460/3-74-009

TABLE 6-1

ANTIKNOCK QUALITY OF SHALE GASOLINES

Research Octane No. Clear(a)	Vol. % Aromatic Hydrocarbons	Processing	Reference
55.4	16.6	Hydrog. of 400°F. + oil from in situ shale oil	(4-95)
57.9	26.0	240-408°F. naphtha from in situ crude shale oil	
57.0	23.0	203-400°F. naphtha from in situ crude shale oil	
36.4	5.5	HDN(b) naphtha 175-404°F.	
73.0	----	Reformate of HDN; 140-385°F.	
90.9	----	Cat. cracked 400°F.+; hydrogenated	
40	12.5	Hydrogenated naphtha	(4-59)
59	28.0	Cat. Reformed Hydrog. Shale Oil	
69	45.1	Cat. Reformed Hydrog. Shale Oil	
82	----	Cat. Reformed Hydrog. Shale Oil	
89	51.9	Cat Reformed Hydrog. Shale Oil	

(a) No antiknock agent has been added.

(b) HDN = hydrodenitrogenated.

---- = not reported.

EPA-460/3-74-009

TABLE 6-2

COMPOSITION OF GASOLINES FROM COAL

Process	Hydro. COED(a)	COG SRC(b)		Seacoke	COED(a)	Hydro. Coal	Hydro. Light Tar	Hydro. Pyrolysis Tar	Hydro. Light Oil	Hydro. Light Oil	Hydro. Coal	Hydro. Coal Reformed	Hydro. Coal Reformed
Boil. Range of Fract. °F.	C_5-400	C_5-180	180-375	C_5-420	C_6-435	Gasol.	Gasol.	Gasol.	90-357	90-362	Gasol.	Gasol.	Gasol.
Research O.N. clear						93	95	98			83.7	97.2	81.5
Motor O.N. clear									76.2	76.5	77.3	85.3	75.3
Hydrocarbon Comp. Vol. %													
Saturates	82.9						30	26					
Paraffins		50	20	18.6	18.1	17					41.8	24.5	
Olefins	1.4					2	1.0	1.0	3.0	4.0	2.5	1.0	3.4
Naphthenes		47	65	70.0	64.6	8					26.2	17.0	
Aromatics	15.7	3	15	11.4	17.3	52	69	73	28.6	27.9	29.5	57.5	28-29
Total Cyclics		50	80	81.4	81.9	60					55.7	74.5	
Atomic Comp., Wt. %													
C	86.20			86.4	86.7								
H	13.74			13.4	13.1								
O	0	0.005	0.02	0.14	0.06								
S	0.02	nil	0.001	0.007									
N	0.02	0.01	0.02	0.009	0.01								
Reference	(4-61)	(6-2)	(6-2)	(6-3)	(6-3)	(6-4)	(4-62)	(4-62)	(6-1)	(6-6)	(6-7)	(6-7)	(6-8)

(a) COED - utilizes pyrolysis of coal to give gas, oil and char

(b) COG - "Coal, Oil, Gas" concept
SRC - Solvent Refined Coal process

} See Section 5.2 for process descriptions

Blanks indicate that data were not obtained

fairly good octane number, certainly better than paraffins in shale naphtha, which is reflected in the data in Figure 6-1.

The above discussion has been based on the Research octane number, since it is the most familiar antiknock criterion. Further, in pre-1965 automobiles, it had a stronger influence on road antiknock performance than Motor method octane number. However, in the past several years, the character of the automobile has changed until now the Motor octane number is more important in determining road antiknock performance (6-19, 6-20). Since it is difficult to forecast how future automobiles will respond, it is necessary to view both Research and Motor octane numbers as important properties of future gasolines. Table 6-2 indicates a Motor octane rating of about 6-12 units lower than the Research rating, based on three data points for coal gasolines. A difference of 8-10 units between Research and Motor octane numbers is typical for conventional gasolines. There are no recent published data on the Motor octane of shale gasolines.

The discussion so far has dealt with components of a finished gasoline, i.e., in the petroleum case, reformates are only one component of a finished gasoline. Unleaded petroleum gasolines in the U.S. contain about 20% aromatics at 90 RON and 40% at 95 RON. These aromaticities compare with 50-60% for shale and coal fractions as well as for petroleum reformates of the same octane range. In petroleum, highly aromatic reformates are blended with other fractions rich in paraffins or olefins. It is expected that petroleum fuels will be available throughout the rest of this century. Consequently, coal gasolines could replace petroleum reformates to make finished gasolines of equivalent octane number and aromatics content. Alternatively, such finished gasolines could be prepared by blending coal gasolines with paraffinic shale naphtha components.

However, the contract also requires consideration of a scenario in which petroleum is postulated not to be available and fuels are prepared from the alternative source. Under these conditions, it is necessary to explore the ramifications of formulating coal gasolines with higher aromatics concentrations than presently used.

- Exhaust Emissions

It is expected that highly aromatic gasolines will not have an appreciable effect on exhaust emissions from automobiles equipped with advanced emission control systems. This is indicated by data (6-9) from an engine equipped with a catalytic exhaust treating system, which showed very low sensitivity to changes in fuel aromaticity. Atmospheric reactivity of the exhaust from such systems is very low due to the low mass emission of hydrocarbons. The use of exhaust gas recycle in future cars to control NO_x emissions would also tend to compensate for any effect of fuel composition on NO_x formation.

In an uncontrolled vehicle the emissions of aromatic hydrocarbons in the exhaust increased as the aromaticity of the fuel increased. Total aldehyde emissions, however, decreased slightly (6-9).

• Volatility

Since benzene (boiling point 176°F) is the lowest boiling aromatic hydrocarbon, the portion of the gasoline boiling below 176°F (i.e., the "front-end") probably decreases in concentration as the aromaticity of the gasoline increases. This would tend to cause difficult starting of carburetted engines at low temperatures. The simplest solution to this potential problem is to add some low-boiling non-aromatic fraction.

• Toxicity

The toxicity of highly aromatic coal gasolines is also of considerable concern. An analysis (4-62) of an unleaded 98 Research octane number coal gasoline produced by the hydrogenation of tar from the pyrolysis of coal indicated about 70% aromatic hydrocarbons of which 1/3 (i.e., >20% on fuel) was benzene. There are no comparable data available on coal gasolines made via hydrogenation.

At present, there are no Federal or State restrictions in the U.S. on the amount of benzene in gasoline delivered to an automobile fuel tank. However, there are labeling restrictions (6-14) on products containing more than 5% benzene that may be carried home by a customer. This presumably would cover gasoline delivered to a container provided by a customer for use in an applicance such as a lawn mower.

It is possible that a limitation on benzene in gasoline may be established in the future. The advent of fuels from coal and/or shale may focus attention on this question. It is of interest to note that Switzerland limits benzene in gasoline to a maximum of 5%. Sweden and Germany also have proposed laws providing a limit of 5% or lower.

• Materials of Construction

The materials of construction of the automotive fuel system may require some changes to handle properly fuels containing appreciably more than 50% aromatics. Such high concentrations of aromatics may cause deterioration and swelling of current gaskets, fuel pump diaphragms, etc. This, however, should not be a difficult problem to rectify by the use of different materials.

• Nitrogen and Sulfur Content

Although raw shale oil is high in nitrogen, the upgraded syncrude, as described in Section 5.1, contains only 0.035% nitrogen. Data on petroleum crudes (6-11) indicate a median nitrogen content of 0.05%, with a maximum of ca. 0.6%. It is expected, therefore, that conventional refining processes will produce gasolines and distillates with nitrogen contents as low as that made from petroleum.

It is more difficult to denitrogenate a given material than to desulfurize it. As a result, the denitrogenation of shale oil invariably gives extremely low sulfur levels, e.g., ca. 0.005% sulfur corresponding to 0.035% nitrogen.

The same general picture also applies to coal. There are some data in the literature (6-12) which indicate that the crude product from coal hydrogenation (a 143/510°F fraction) contains 0.23% nitrogen and 0.10% sulfur. After catalytic hydrogenation, the total product contained 0.0057% nitrogen and 0.012% sulfur. These levels compare favorably with analogous petroleum products.

6.1.2 Coal and Shale Distillates

The table below summarizes some properties of shale syncrude fractions which are in the distillate boiling range. The information is abstracted from Table 5-1.

Properties of Shale Syncrude Fractions

Boiling Range, °F	350/550	550/850
Gravity, °API	38.3	33.1
Sulfur, Wt.%	0.0008	<0.01
Nitrogen, Wt.%	0.0075	0.12
Aromatics, Vol.%	34	--
Freezing Point, °F	-35	--
Pour Point, °F	--	+80

The data indicate that it should be possible to make a good quality diesel fuel from shale syncrude. By interpolating the data on the 350-550°F and 550-850°F cuts it is estimated that the syncrude will yield a diesel fuel (350-650°F) with an API gravity in the range of 30-35° and a Cetane Index of about 40-45. While usable in current automotive diesel engines, 40-45 C.I. is low. Hence, blending with petroleum-derived diesel fuel could be advantageous if it is feasible logistically. The sulfur and nitrogen levels are very satisfactory.

The high pour point (80°F) of the 550-850°F fraction suggests that a normal diesel fuel (i.e., 350-600°F) produced from the shale syncrude shown may have a higher pour and cloud point than can be tolerated in truck operation under low temperature conditions. A dewaxing operation may be required, or alternatively, additive should be used, such as those used to improve the low temperature flow properties of petroleum fuels. Dewaxing would be expensive, and the response of shale distillates to low temperature flow improving additives remains to be established.

The 34% aromatic content of the 350-550°F fraction indicates this fuel would not be of premium quality as a gas turbine fuel. Possible problems arising from the high aromaticity includes smoke formation and

high flame luminosity resulting in decreased gas turbine combustor life. More extensive catalytic hydrogenation might correct this deficiency, but at a cost, as mentioned below.

With regard to distillates from coal, there is no body of data from which to infer reliable product quality information. There are indications from a single literature source (6-12) that the H-coal hydrogenation process yields a distillate fraction (390/510°F) which is very low in aromatics, i.e., most of the polynuclear aromatics have at least been partially reduced to cycloparaffins. Such a fraction is expected to have a cetane number of ca. 40. As pointed out in Section 5.2 and in Appendix 9, the refining study of coal syncrude led to a distillate with Cetane Index of 35-38. The indication therefore is that coal distillates are unsatisfactory automotive diesel fuels, which require ca. 40-45 cetane number.

First of all, however, it is necessary to confirm this implication by direct measurement on coal distillates. It is conceivable that the Cetane Index correlation, derived from data on petroleum fractions, should be corrected for coal distillates. If the low cetane number is confirmed, a number of options exist for dealing with the situation:

1. The simplest alternative is to divert the distillate into uses other than diesel fuel--e.g., heating oil, low sulfur fuel oil, etc.

2. As pointed out earlier in this section, it is simple to blend the coal distillate with either shale or petroleum fractions of higher cetane number.

3. Cetane improvers, such as amyl nitrate, can be added to the coal distillate. These, however, increase the cost of the finished fuel and, moreover, would contribute to NO_x in the exhaust emissions.

4. Another alternative is to increase the cetane number by processing, such as severe hydrogenation or hydrocracking. It is not clear how much improvement can be achieved in this fashion, although the cost will certainly be high--on the order of $3/bbl. or $0.50/MMBTU. Moreover, such processing would crack some of the distillate into the naphtha boiling range.

The same literature source cited above (6-12) indicates a smoke point for the 390/510°F fraction which is outside the ASTM specification for Jet A fuel. This is surprising in view of the low aromaticity of this fraction. The jet fuel properties are indicative of fuel performance in automotive gas turbines.

Finally, it appears that both the sulfur and nitrogen levels will be satisfactory, if the distillate is processed according to the refining scheme discussed in Section 5.2.

Overall, it must be stressed that available data on coal and shale distillate are very limited. Much more data are needed.

6.2 Performance of Methanol and Methanol/Gasoline Blends

Methanol can be used as an alternative fuel either unblended ("neat") or as a blend with gasoline hydrocarbons. These two approaches will be discussed separately.

6.2.1 Methanol

In order to use neat methanol in a spark-ignition engine, a number of factors would have to be considered (as mentioned in Section 4.4):

1. The relatively low volatility of the methanol (149°F boiling point) requires special means for starting carburetted engines at low temperatures.

2. The high heat of vaporization requires special heated manifolds for providing suitable air-fuel mixtures for ignition.

3. The low heat of combustion requires a large fuel system (tank, pump, lines, filters) to give satisfactory range and performance.

4. The high octane number of methanol (106 Research and 92 Motor Octane unleaded) should permit operation at increased compression ratio, leading to improvements in thermal efficiency.*

5. The effect of methanol on materials of construction for the fuel system must be considered.

With the modifications needed to take account of the above factors, the vehicle would be essentially inoperable on conventional gasoline. Consequently, a separate fuel distribution network has to be provided in order for such modified vehicles freely to be used. It would be possible, of course, as mentioned in Section 7, to limit methanol for use in vehicle fleets operating within cruising range of specific refueling points, such as current LPG vehicles.

Some of the modifications mentioned above, e.g., involving octane number, cold starting, and manifold heating, apply only to an Otto cycle engine. They are not applicable to a continuous combustion device, such as a gas turbine. In such an engine, the low luminosity of the methanol flame and the low NO_x emissions would be significant advantages.

As mentioned below, water sensitivity is a serious problem with methanol/gasoline blends. This is a much less serious concern with pure methanol. However, water still could cause problems due to:

---

* This point is not firmly established, because the road anti-knock properties of methanol have not yet been fully defined.

1. Possible corrosion in the fuel system, particularly if the water contains an appreciable concentration of minerals.

2. Batch-to-batch variability in water content could affect performance.

3. Potential for intentional adulteration with water, which would penalize the consumer financially.

6.2.2 Methanol/Gasoline Blends

The concept of using a methanol/gasoline blend as a fuel is not new. There are a number of important potential problems with such a system that must be recognized and evaluated:

1. Partial Miscibility and Water Sensitivity

Methanol is completely miscible with some gasoline components but only partially miscible with others. As would be expected, mutual solubility decreases as the temperature is lowered. Methanol and benzene are miscible in all proportions down to 3°C. However, as shown in Figure 6-2 (6-17), only 5 vol.% of methanol can be dissolved in n-hexane at 0°C. Benzene and n-hexane, representing aromatic and paraffin hydrocarbons, respectively, bracket the solvency of commercial gasolines for methanol.

As was pointed out in Section 6.1, aromaticity increases with octane number in lead-free automotive gasolines. Thus, methanol is likely to be more miscible with premium grade than with regular grade gasolines. For example, it has been reported (4-44) that dry methanol was miscible in all proportions with a dry aromatic gasoline at 15.5°C. At the same temperature, only 13% of methanol dissolved in a regular grade fuel while, at -18°C, only 4% of methanol was dissolved.

Solubility may be improved by the use of a mutual solvent, but the available data are not particularly encouraging. For example, the addition of 2.4 vol.% of isobutanol to the blend can increase methanol solubility from 3 vol.% to 10 vol.% in regular grade gasoline at 0°C. Approximately 4 vol.% of isopropanol would accomplish the same improvement, whereas high molecular weight alcohols would be somewhat more effective.

The problem of phase separation is greatly intensified if water is present. As indicated in Figure 6-3 (4-44) the presence of less than 0.5% water causes almost complete phase separation at 76°F. At lower temperatures, the problem is even more severe. There are indications that the presence of mutual solvents, such as higher molecular weight alcohols, increases water tolerance but not enough to avoid phase separation. Conceivably, an emulsifier might also be developed which would stabilize the separated phases, but the cost of this approach would certainly be a problem.

If a methanol/gasoline blend were to be marketed, it would have to be blended at the pump. It simply is not practical to consider a totally dry distribution system from the refinery to the customer's tank.

FIGURE 6-2

BINARY PHASE DIAGRAM FOR HEXANE/METHANOL AND BENZENE/METHANOL

(Ref. 6-17)

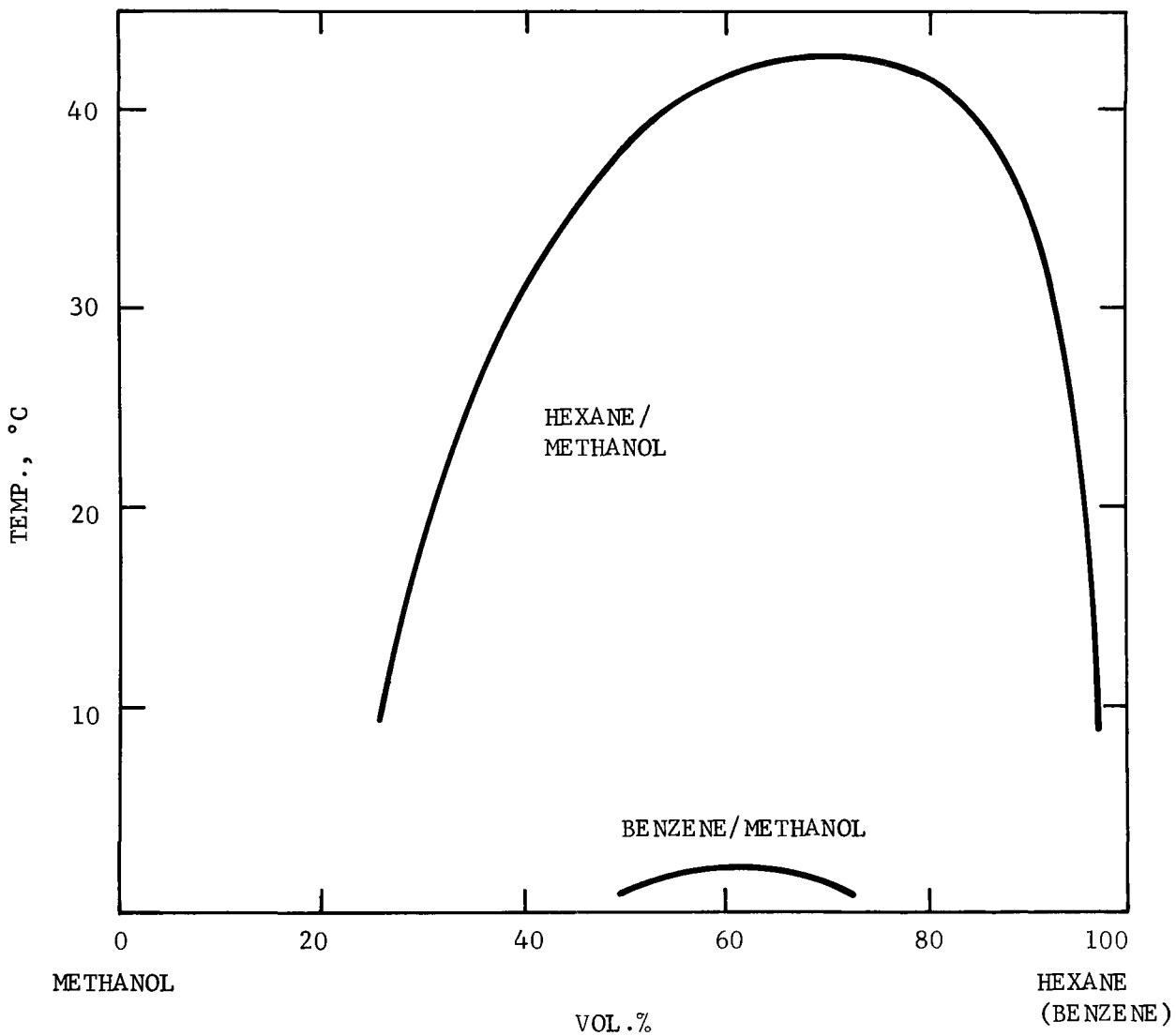

EPA-460/3-74-009

FIGURE 6-3

EQUILIBRIUM PHASE DIAGRAM FOR THE SYSTEM METHANOL, WATER, AND GASOLINE (PREMIUM)

(Ref. 4-44)

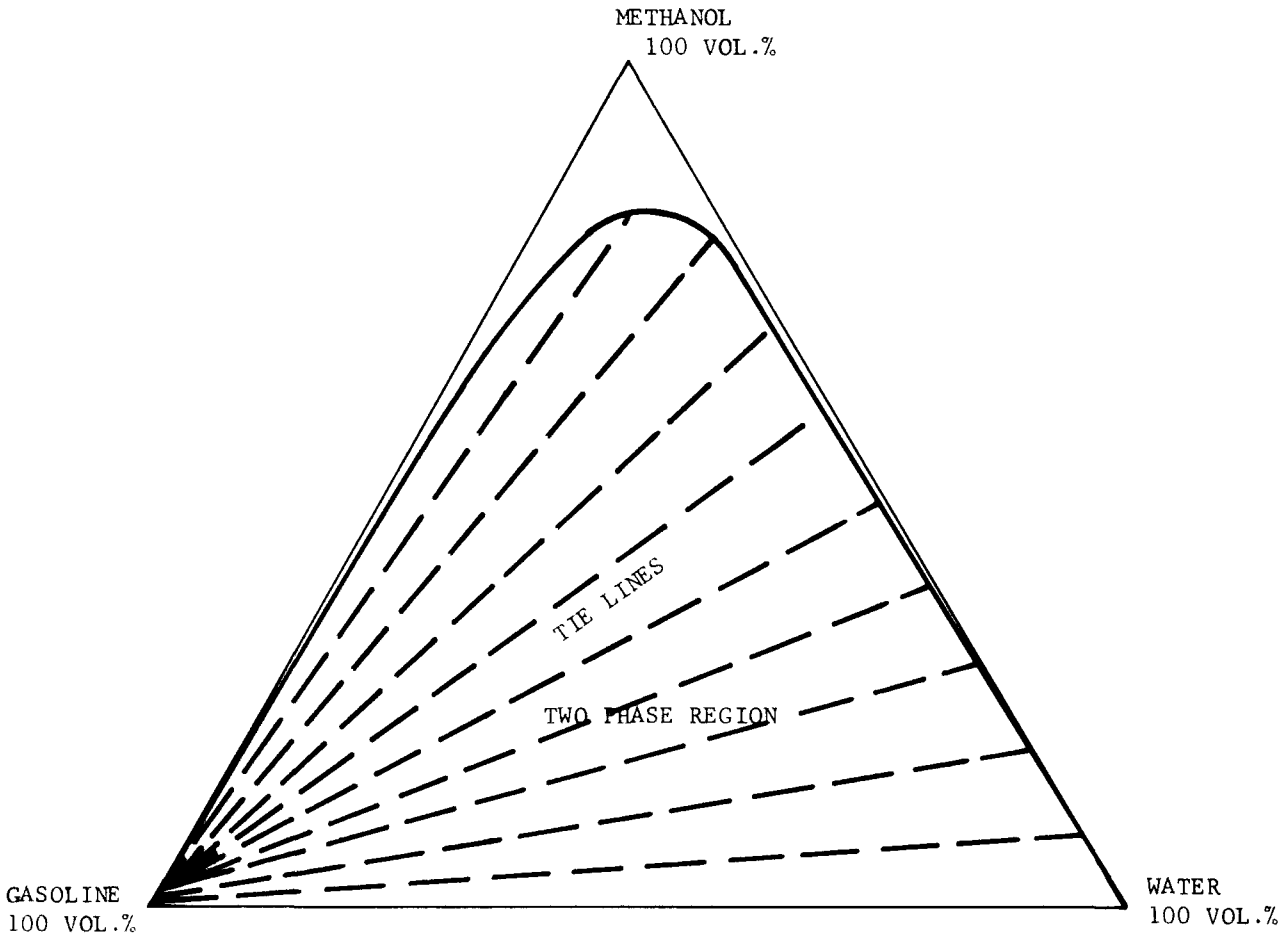

EPA-460/3-74-009

Even if the methanol/gasoline blend could be supplied dry to the customer's tank, the possibility remains of separation in the tank due to "breathing". This might require the use of adsorbent traps on the gas tank.

2. Volatility and Vapor Lock*

Methanol and hydrocarbons form very nonideal solutions, as shown in the vapor pressure composition diagram in Figure 6-4. In dilute hydrocarbon solution, methanol cannot hydrogen-bond to itself, and therefore becomes much more volatile. Translating this effect to a methanol/gasoline mixture, Figure 6-5, data obtained at Exxon Research and Engineering Co.** on the substantial increase in vapor pressure of a gasoline due to the addition of relatively small amounts of methanol. It is predicted that an increase in Reid vapor pressure (RVP) of 3 psig (compared to an average base level of 9 psig in the summer and 12 psig in the winter), due to as little as 2% methanol, would cause significant vapor lock problems in current automobiles.

Presumably the problem could be corrected by backing out volatile hydrocarbons, such as butane and pentanes, from the gasoline. This is illustrated in Table 6-3. It illustrates the adjustments that must be made in a gasoline to avoid undesirably high RVP when 10% methanol is added to a gasoline which has been blended to 10 psi RVP with 6.7 vol.% n-butane. If the methanol is added directly to the 10 psi base fuel, a blend having an RVP of 13 psi would be obtained. This is too high. In order to produce a methanol blend of 10 psi the base gasoline must be debutanized. The net result is that although the 10 psi methanol blend constitutes a 5% larger volume than the n-C_4 blend, there is essentially no change in the BTU's available as automotive fuel (119,890 vs. 119,930). However, the methanol blend will be higher in octane quality than the all-hydrocarbon gasoline. The calculated octane numbers are shown to indicate the trend only. The absolute level is open to question because the octane blending value of methanol is quite variable with concentration and base gasoline type.

---

* Vapor lock is the malfunctioning of a gasoline powered vehicle caused by pockets of fuel vapor formed at critical points in the fuel system. It arises when the vapor pressure of the gasoline is too high for the ambient temperature under which the vehicle is operating. The symptoms are hard starting, poor acceleration, and stalling. They usually develop after operating under conditions causing high under-hood temperatures, e.g., on a hot day in stop-and-go traffic, after sustained high-speed operation, etc.

** These data were obtained totally at the contractor's own expense in a program independent of the work performed under this Government contract.

FIGURE 6-4

VOLATILITY OF METHANOL/BENZENE MIXTURES

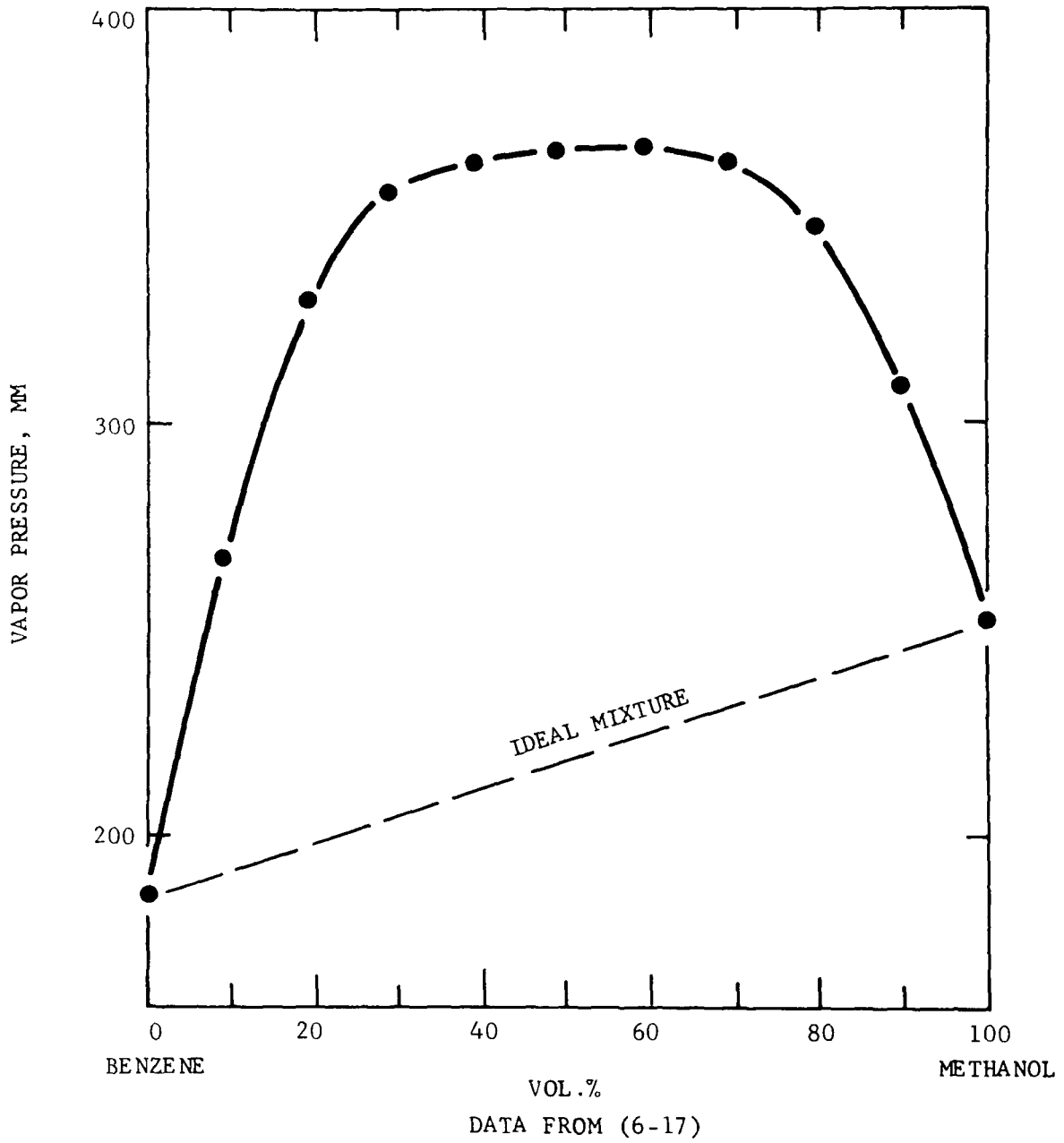

DATA FROM (6-17)

EPA-460/3-74-009

FIGURE 6-5

EFFECT OF METHANOL ON
GASOLINE VAPOR PRESSURE

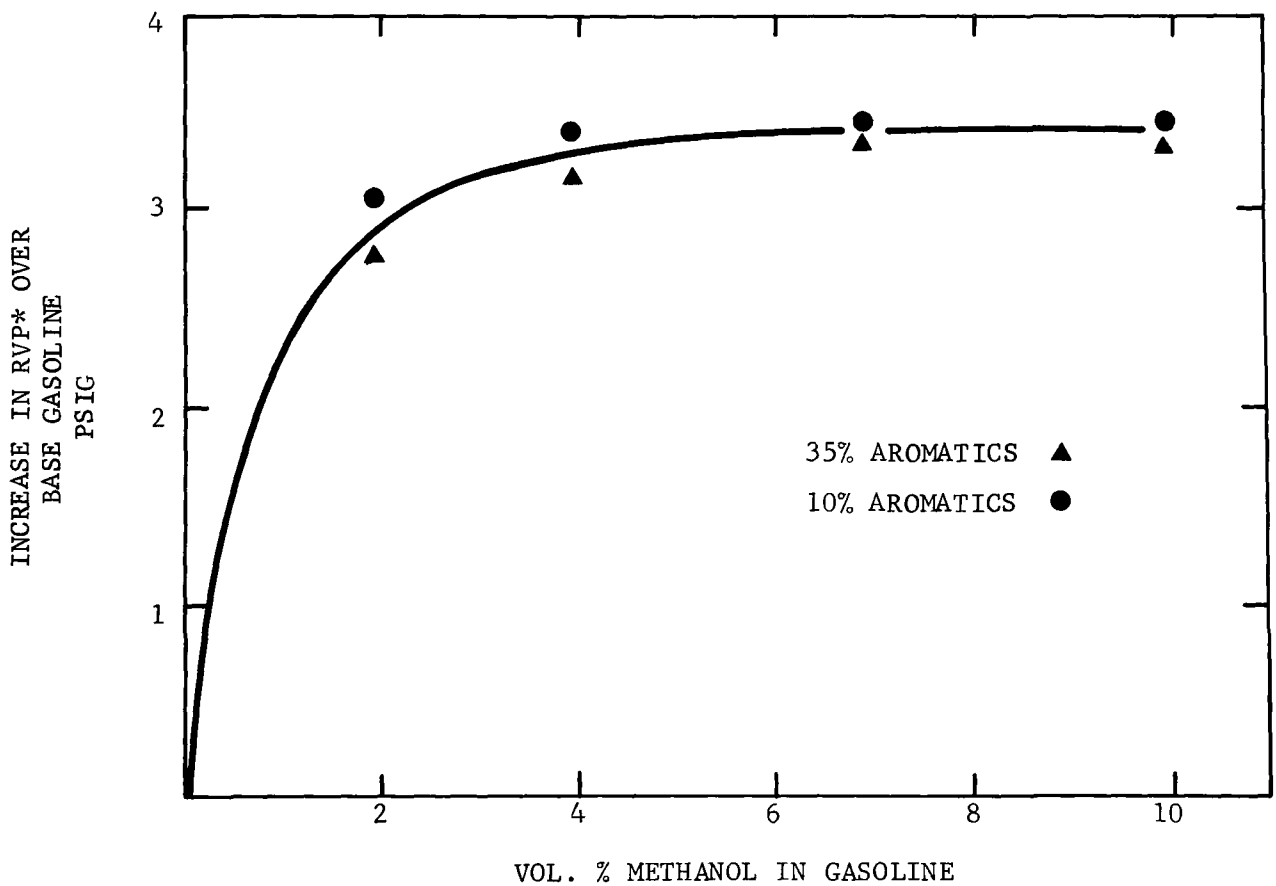

*REID VAPOR PRESSURE (PSIG)

EPA-460/3-74-009

TABLE 6-3

COMPARISON OF METHYL ALCOHOL
AND n-BUTANE AS GASOLINE BLENDING AGENTS

Property	n-C4	MeOH	n-C4 + MeOH
Reid Vapor Press. (Blend Value) psi @ 100°F	59[a]	43[a]	
Research O.N. (clear)	94	106	
Motor O.N. (clear)	90	92	
Heating Value (Net) BTU/gal.	95,710	57,530	
Cal. Properties Of Gasoline Blends (Basis: 1 gal. base gasol.[b])			
Reid Vap. Press. of Blend, psi @ 100°F	10	10	13
Vol. of Blend Agent. added, gals.	0.0612	0.111	0.172
Total Vol. of gasoline blend, gals.	1.0612	1.111	1.172
Total BTU's	119,930	119,890	126,320
Research O.N. (Clear)	92.1	93.4	93.5
Motor O.N. (Clear)	84.6	84.8	85.3

(a) Assumes a linear relationship between volumetric concentration of the agent in a base gasoline and the property of the blend. Since in fact materials frequently do not blend linearly the calculated blending values are reliable only for the concentration and base stock in which the determination was made, i.e., in 10 vol.% concentration for MeOH and 6 vol.% for n-butane.

(b) 7 psi RVP; 113,500 net BTU/gal; 92 Research O.N.; 84 Motor O.N.

This simple analysis shows that the addition of methanol to gasoline would not result in any significant increase in the automotive fuel supply. It is most likely that the displaced butane would be used as an industrial fuel, which begs the obvious question: Why not use methanol as an industrial fuel and avoid all of the complications associated with a gasoline/methanol blend?

On the positive side, methanol seems to have very good octane blending characteristics. However, in the example just described, a debit must be included due to the octane number of the displaced butane. Furthermore, the road performance of late model vehicles correlates best with Motor octane number. A good Research octane blending value is of little value in such cases.

Admittedly, it should be possible to modify the automotive fuel system to handle a more volatile blend, completely avoiding the problem of butane displacement. Such a modification would add complexity and cost which must be justified in terms of performance.

3. Driveability

It is very important to determine the performance of vehicles fueled with methanol/gasoline blends--e.g., with regard to acceleration and stalling. Should such problems arise, the cause must be defined. Poor driveability could result from debutanization of the gasoline to avoid excessive vapor pressure due to methanol. One of the functions of butanes (and pentanes) is to maximize fuel evaporation in the intake manifold. The high boiling point and heat of vaporization of methanol could lead to fuel maldistribution.

Performance problems could also result from the fact that methanol/gasoline blends operate leaner than gasoline alone for a given air/fuel ratio. An engine with a carburetor set to deliver 15/1 A/F will operate at 1% excess air* with gasoline and 12% excess air with a 15% methanol-gasoline blend. With cars adjusted to borderline performance on gasoline (for exhaust emission control purposes) the additional leaning-out with the alcohol blend could be enough to cause misfiring and stalling (see Figure 6-7).

4. Exhaust Emissions and Fuel Economy

The discussion of exhaust emissions data in Section 4.5.3 mentioned a few references in which an attempt was made to analyze the performance of vehicles and engines fueled by methanol or methanol/gasoline blends. A more recent study involved a few vehicles, chosen at

* Over the stoichiometric required amount for complete combustion to carbon dioxide and water.

random from a group of private individuals, which were operated on methanol/gasoline blends (6-18). Nevertheless, there has not been a carefully controlled, side-by-side comparison of the exhaust emissions and fuel economy of vehicles fueled with gasoline vs. gasoline/methanol blends.

Recent data by Exxon Research and Engineering Company* shed some light on this subject. The table below summarizes exhaust emission data on three vehicles:

Exhaust Emissions with Methanol/Gasoline Blends

		Emissions, g/mi, FTP*			
	Equivalence Ratio	Hydrocarbons	CO	NOx	Aldehydes**
1967 Model					
W/O Methanol	0.9	5.2	83	6.4	0.13
+15% Methanol		3.8	41	8.1	0.20
1973 Model					
W/O Methanol	1.05	1.1	21	2.6	0.075
+15% Methanol		1.1	8	1.7	0.10
Advanced Model					
W/O Methanol	ca. 1.0	0.1	0.3	2.6	0.002
+15% Methanol		0.1	0.4	2.3	0.004

* Federal Test Procedure.
** Calculated as Formaldehyde.

In this work a 15% methanol blend was compared with a typical gasoline in three vehicles: a 1967, a 1973, and an "advanced model". The 1967 model was a 289 cu. in. V-8, and the 1973 and advanced models were 351 cu. in. V-8. All cars had automatic transmission. These models represent a wide range in carburetion, i.e., (1) the 1967 car is set rich, (2) the 1973 car is lean, and (3) the advanced model operates at about the stoichiometric A/F ratio, and is equipped with a catalyst for control of exhaust emissions. The two test fuels were matched in Reid vapor pressure which meant backing out all the butane and about half the pentane to make the methanol blend. There were no carburetion changes made when methanol was added.

* These data were obtained totally at the contractor's own expense in a program independent of the work performed under this Government contract. They will be presented as part of a paper on "Methanol as a Gasoline Extender: Fuel Economy, Emissions, and High Temperature Driveability" by E. E. Wigg and R. S. Lunt at the meeting of the Soc. of Automotive Engineers, Toronto, Oct. 21-26, 1974.

The addition of methanol resulted in lower CO and HC and higher NOx in the 1967 model. In the case of the 1973 model, there was a decrease in CO, no change in HC, and a decrease in NOx. The CO and HC emissions with the "advanced" model were too low to establish any effect due to fuel. The NOx emissions showed a slight decrease.

These trends are quite consistent with the basic relationships between exhaust emissions and A/F ratio, as shown on Figure 6-6. The 1967 model operated at A/F less than stoichiometric, and the 1973 model operated on the lean side of the stoichiometric point.

It is not surprising to observe that the aldehyde emissions (mainly formaldehyde) are 30-50% greater for the methanol/gasoline blends. The table below summarizes fuel economy data for the same test:

Fuel Economy Data Using Methanol/Gasoline Blends

	Fuel Economy*	
	Miles/Gallon	Relative mi./BTU, %
1967 Model		
W/O Methanol	14.3	--
+15% Methanol	14.4	+8
1973 Model		
W/O Methanol	11.2	--
+15% Methanol	10.5	+1
"Advanced" Model		
W/O Methanol	11.5	--
+15% Methanol	10.9	+3

* By fuel weight measurement in Federal Test Procedure; 4000 lb. inertial weight setting on dynamometer.

The fuel economy for the methanol/gasoline blend, on a miles per gallon basis, was about the same as gasoline for the 1967 vehicle, but was somewhat poorer for the 1973 and the "advanced" model. These results can most easily be explained by the curves on Figure 6-7. The 1967 car, operating rich, showed essentially no change in miles per gallon fuel economy with the methanol blend because of two compensating effects: the improvement in relative fuel economy due to leaner operation with methanol was nullified by the lower BTU/gal. of the methanol blend. The decrease in fuel economy for the lean 1973 and "advanced" model is due to the lower heat content of the methanol blend and the fact that they are operating on the descending portion of the fuel economy-A/F curve.

The fact that a small increase in miles/BTU is obtained in every case with the methanol blend indicates that the presence of methanol

FIGURE 6-6

EFFECTS OF AIR/FUEL RATIO
ON EXHAUST COMPOSITION

(Ref. 6-16)

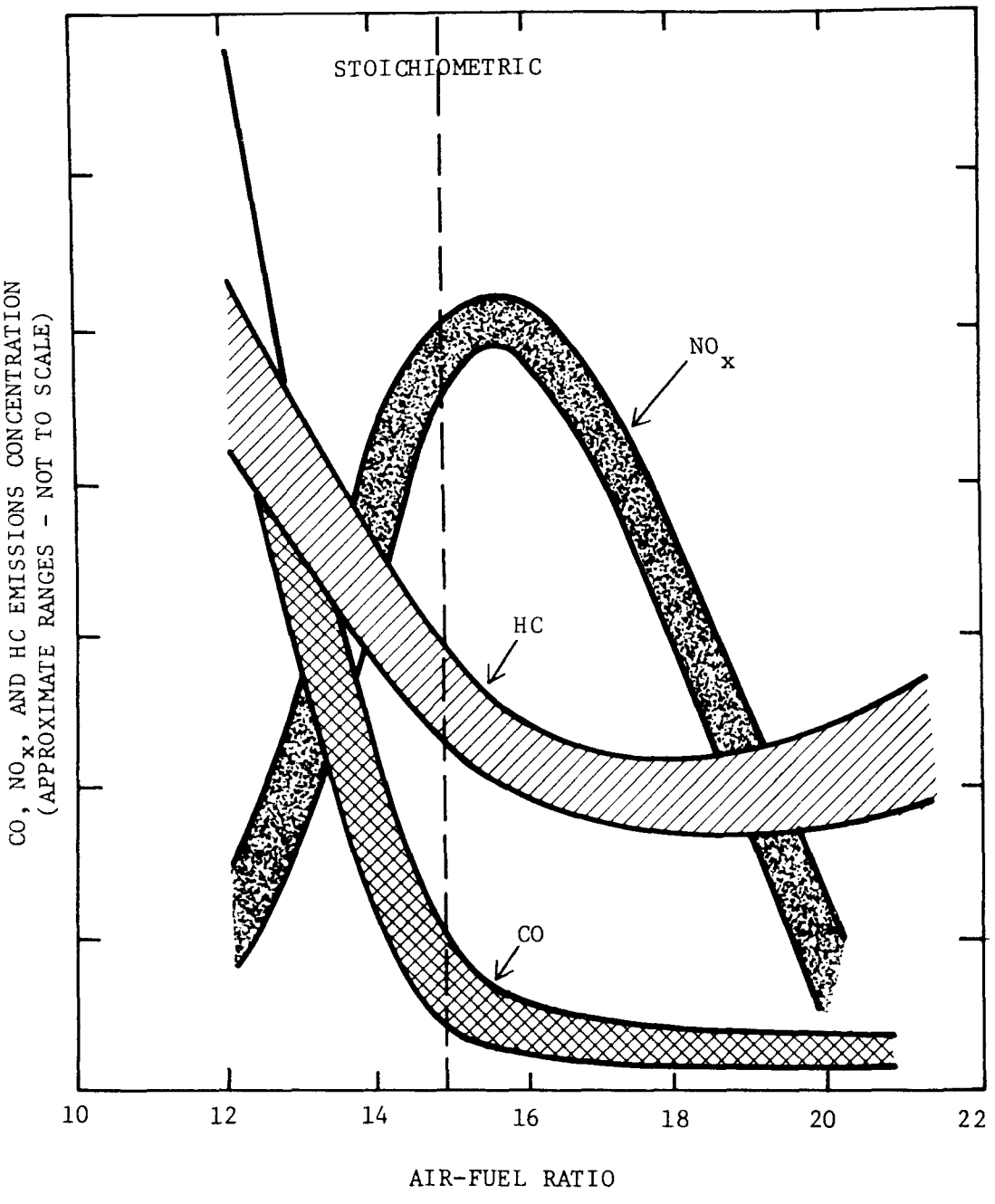

EPA-460/3-74-009

FIGURE 6-7

FUEL ECONOMY AS A FUNCTION OF AIR-FUEL RATIO

OTTO CYCLE ENGINE, CONSTANT SPEED
(Ref. 4-117)

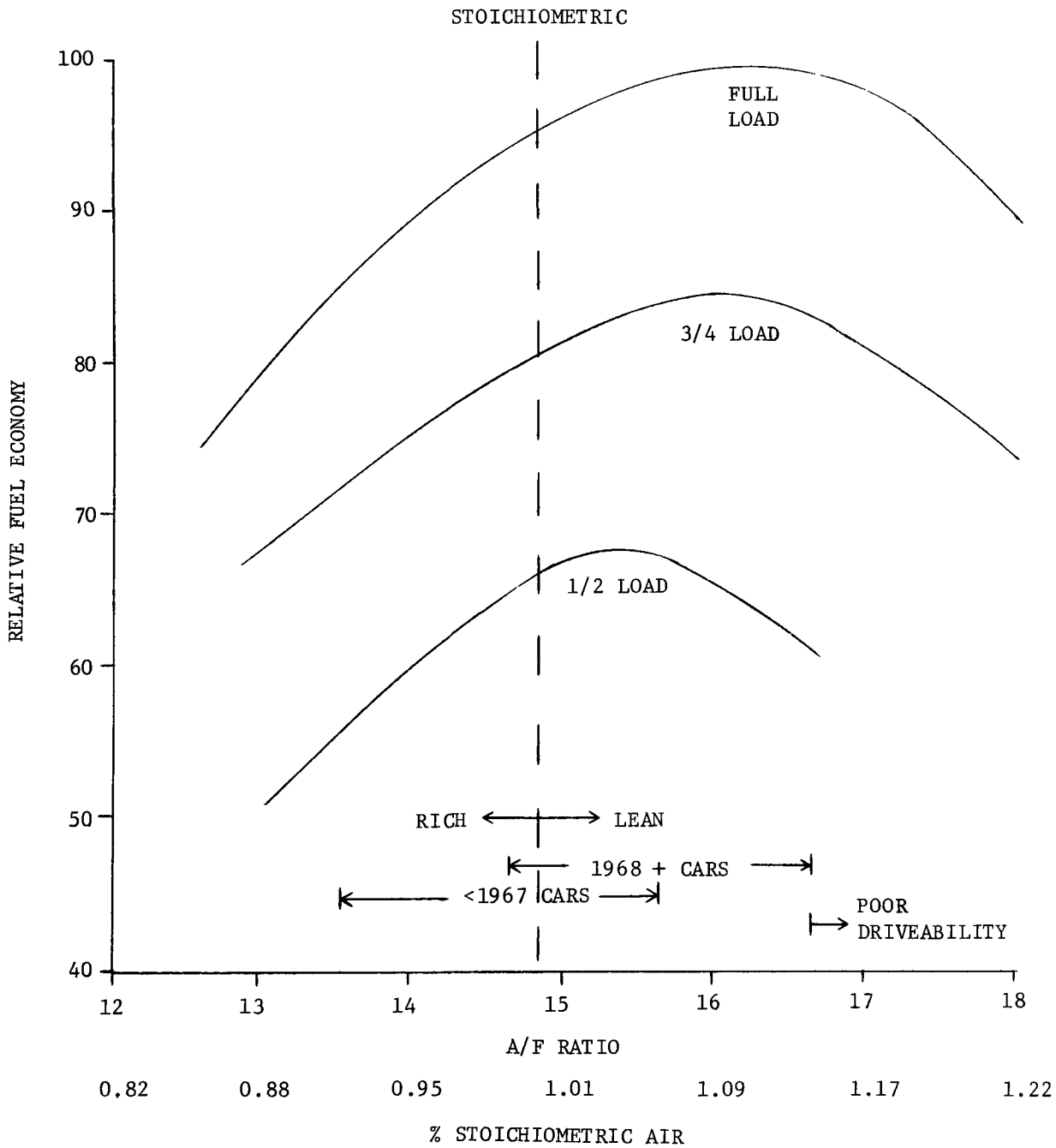

EPA-460/3-74-009

may help the efficiency of combustion in the engine, e.g., because of its wide flammability limits. Furthermore, there is the possibility that optimizing the engine (with regard to spark advance, carburetor adjustment, etc.) for operation on the methanol blend may permit improvements in performance and/or economy and still meet exhaust emission requirements. Obviously, much more data are needed to clarify the picture.

7. EVOLUTIONARY CONSIDERATIONS

If it is postulated that the system of automotive fuel use will be different in the future than it is today, then it is also necessary to conceptualize how the changes can come about. Not only is it necessary to see a possible approach path from the present to a new condition in the future but it is also necessary to:

(a) look at the entire path to see what roadblocks may be along the way.

(b) consider whether other easier or better paths may be available such that the "possible" path is not likely to be followed.

Various types of transition are involved in this study of alternative fuels, and each will be discussed separately. The first example is an extreme case and one of maximum difficulty. The purpose of this example is categorize the various difficulties as a prelude to discussing ways in which some or all of the problems may be overcome.

American industry is adept in the introduction of new products. Resourcefulness and sophistication in this respect may be taken for granted. However, the alternative fuels problem has features that distinguish it from most other types of new product development and introduction. The single most important feature is that highway vehicles, of their very essence, are mobile. This means that they must be able to obtain suitable fuel wherever they are driven. In turn, this poses a special problem in the hypothetical case in which the introduction of a new engine would require the concurrent introduction of a new fuel, i.e., neither the new engine nor the new fuel could be used except with each other. This problem is referred to as the "New Engine/New Fuel Dilemma" in the following section.

7.1 The New Engine/New Fuel Dilemma

This particular version of the old "chicken-or-the-egg" problem has several unique characteristics. Here, it is not a matter of which comes first but rather that a number of conditions must be satisfied simultaneously:

(a) the automotive industry must decide to introduce a new engine.

(b) independently of (a), the fuels industry must decide to introduce a new fuel.

(c) preferably, for competitive reasons, several companies in both industries should independently decide to introduce the respective new products.

(d) the general public must be willing to purchase the new products (otherwise commercial introduction will be a failure);

(e) the new fuel must be widely available (because the general public will not purchase equipment for which fuel is not readily available).

(f) the new system should offer cost or performance advantages over conventional or other alternatives, and should not present any radical disadvantage.

By way of example, the simultaneous introduction of automotive hydrogen and vehicles equipped with engines modified to use hydrogen would seem to require solution of the complex problem created by the above conditions. Steps towards a solution will be discussed later; the immediate purpose is merely to illustrate that the dilemma discussed above is pertinent to the alternative fuels study.

Reference may also be made to electric vehicles, e.g., advanced battery-powered automobiles. The introduction of such vehicles is recognized as being a significant marketing problem, and the matter is already being studied under EPA sponsorship. However, there is one important difference: namely, that battery-powered vehicles do not require a new fuel (since electricity is very widely available). The point here is that the introduction of a new engine (or vehicle) will be much easier if it can use fuels or energy sources that are already available. Similarly, the introduction of new fuels will be much easier if they can be used by existing vehicles. Extension of these concepts leads to the "compatibility scenario" discussed below.

7.2 The Compatibility Scenario

Highway vehicles have an average useful life of about ten years. At the time of introduction of a new power plant, the existing vehicle population, or part of it, will require the continued supply of what are then "conventional fuels" for at least another ten years.

No evolutionary problem on the fuel side will occur if the new prime mover can use conventional fuels. Similarly, no evolutionary problem will be associated with the introduction of a new fuel if it can be used by a large segment of the then existing vehicle population. Moreover, new engines and new fuels may be introduced at the same time if both are compatible with existing vehicles and fuels.

Compatibility is taken a step further if new fuels are new only in the sense of being derived from a non-petroleum source but, in other respects, are equivalent to petroleum fuels. In this case, it will not matter if the new fuels are blended with petroleum fuels before, or after, reaching the tank of the customer's vehicle. Such blending may not be necessary, but it will not be a restriction. For example, one type of

blending would occur if the customer were to purchase conventional fuel at another service station. Thus, full compatibility has numerous advantages such as:

(a) an individual vehicle operator can purchase fuel anywhere in the U.S. without having to concern himself about whether the fuel is "new" or conventional.

(b) nationwide distribution of new fuels can evolve as availability increases.

(c) new fuels will fit into the existing distribution system (thereby avoiding the additional cost that would be associated with a new, separate system).

(d) potential problems with different costs and prices for new and conventional fuels can be avoided if the new fuels are "rolled into" the existing system (via blending with conventional fuels).

(e) the transition from 100% petroleum to 100% alternative fuels can be accomplished without any discontinuity. The rate at which this transition occurs can then depend on normal market factors such as cost and availability.

(f) competition among suppliers of new, conventional, or blended fuels will be maximized and will ensure that the public will have access to automotive fuels at the lowest commercial cost.

7.3 Automotive Fuel Blends

Conventional automotive fuels are blends. For example, motor gasoline may be a blend of butane, natural gasoline, alkylate, catalytically cracked naphtha, and catalytic reformate. Every petroleum refinery will blend regular (and premium grade) gasoline in a slightly different way. Moreover, the proportions of the different components in the blend will be varied throughout the year to adjust volatility to meet changes in ambient temperatures. The individual purchaser of motor gasoline need not concern himself with these matters and may be quite unaware of them. It is the responsibility of petroleum suppliers to deliver fuels of appropriate quality to service stations.

In the full compatibility scenario discussed in the previous section, the responsibility for blending would be with the fuel supplier. He might blend gasoline components derived from shale oil or coal syncrude with other components derived from petroleum.

The individual driver who feels that the quality of the fuel he has purchased is unsatisfactory is likely to switch to another brand. If the deficiency is real and detectable by the user, other users of the same fuel will do the same. Then the fuel supplier, conscious of a loss of sales, will diagnose and correct the problem.

In practice, it would be extremely difficult for a fuel supplier to market a fuel that is incompatible with other fuels on the market. This is because the supplier cannot be sure that the customer will always buy the same product. Compatibility in this context means that sequential purchases of different fuels should not lead to any serious problems. The only major exception involves the difference in octane number between regular and premium grade gasolines. If a car knocks on regular grade, the remedy is both obvious and available.

Several petroleum companies use blending pumps to provide a range of anti-knock quality between regular (or sub-regular O.N.) and premium (or super-premium O.N.). The same approach could be used for blending methanol with gasoline at the service station pump. However, the volume of methanol in the blend would probably be fixed, e.g., at less than 15%. The reasons for using a fixed blend were discussed in Section 6.2. In principle, the blending pump approach would offer the alternatives of:

- 100% gasoline
- a fixed blend, say 10% methanol/90% gasoline
- 100% methanol

However, three potential problems with this approach are apparent.

First, to be sold separately, the "100% gasoline" would have to be satisfactory in both octane number and volatility. The blend with methanol would also have to be satisfactory in these respects. However, blending of methanol with gasoline would produce changes in both octane number and volatility as discussed previously. Hence, it would not be possible for both the "100% gasoline" and the blend with methanol to be optimized for octane number and volatility. A reasonable compromise may be possible, but this will require verification by experimental data.

The second potential problem is that the purchaser of a methanol/gasoline blend might make his next fuel purchase at a different service station where only "100% gasoline" was available. A low level of water in this gasoline might then cause the fuel mixture in the car's tank to separate into two phases. With adequate anticipation this problem, too, may be avoidable. One approach would be to sell the methanol/gasoline blend for a slightly lower price than "100% gasoline". This would tend to discourage customers from refuelling with "100% gasoline" after once using the methanol/gasoline blend. The practicality of this approach is questionable economically.

The third potential problem relates to "100% methanol". The feasibility of using this fuel depends on changes to the induction system and engine beyond a simple adjustment that could be made at a service station. Certainly, such changes would be required in order to take maximum advantage of methanol as an automotive fuel. Therefore, this third potential problem is a special case of the "New Car/New Fuel Dilemma". This is because the purchaser of a car with an engine designed specifically to run on methanol (and which would not operate properly on gasoline) would expect methanol to be available throughout the U.S. A conceptual way around this difficulty is to assume that there would be a period of years during which methanol blends, but not 100% methanol, would be introduced gradually throughout the U.S. Then, once nationwide coverage was achieved, it would be possible for engines designed specifically for 100% methanol to be sold to the general public.

7.4 Automotive Distillate Fuels

Currently, there is only one type of commercial automotive distillate fuel, namely automotive diesel fuel. However, other types of distillate fuel are used by aircraft powered by gas turbines. This engine type is one of the prime movers under development for highway use. Other engines under development could, or would, also use distillate fuel but not necessarily diesel fuel. Hence, the discussion that follows will deal first with automotive diesel fuel and then with automotive distillate fuels in general.

7.4.1 Automotive Diesel Fuel

In the full compatibility scenario, there would not appear to be major problems with product quality. However, there could be two different problems with fuel availability.

Automotive diesel fuel is widely available throughout the U.S., but at a far smaller number of outlets than is the case with gasoline. For obvious reasons, diesel fuel is available along truck routes but not in residential areas. Given both time and the incentive provided by customer demand, it may be assumed that many service stations would be willing to sell diesel fuel (or an equivalent distillate fuel). Some smaller service stations may not have the physical room to be able to sell an additional fuel but, overall, this would not seem to be a serious limitation. Stated another way, an evolutionary solution appears feasible.

A quite different problem of availability will be examined in an amendment of (i.e., addition to) the scope of work. Here, it will merely be stated that there may be both physical limitations and economic penalties associated with increasing the ratio of distillate-type to gasoline-type automotive fuels beyond a certain point.

7.4.2 Other Automotive Distillate Fuels

The first evolutionary factor to be considered is that a given engine may, in principle, be able to burn a wide range of fuels but, as marketed, the engine may require a certain type of fuel in order to give optimum performance in automotive use.* In practice, the matching of an engine to a particular type of fuel occurs while the (new) engine is being developed. For obvious reasons, the design and optimization of the engine will take account of what fuel is expected to be available when the engine is marketed. Historically, this has meant that new engines have been designed to use widely available conventional fuels. For example, automotive gas turbines have been designed to use automotive diesel fuel even though the engines are capable of operation on other fuels (e.g., naphtha, wide-cut, kerosene, etc.). Furthermore, the optimization will include not only the matching of engine and fuel but also the matching of engine and vehicle. The latter consideration is important to commercial vehicles in terms of fuel cost, specific fuel consumption, size of fuel tank, operating range, power output, and the pay-load that can be carried in view of the other factors.

The next evolutionary factor may be considered in the form of a question: despite technically feasible alternatives, what incentives are there for an automotive distillate fuel that is significantly different from automotive diesel fuel? A possible, but hypothetical, answer is that insufficient automotive diesel fuel will be available in the future but that another type of distillate fuel will be available. A supply/demand forecast of great complexity would be needed to resolve the issue.** Another approach is to argue the following:

(a) potential evolutionary problems are avoided by the full compatibility scenario.

(b) there is great flexibility for matching fuels and energy (in the forms in which they can be made available most economically) to end-uses without the need to force-fit any particular fuel into a use for which it is less suited than another fuel.

(c) automotive distillate fuels other than automotive diesel fuel face some problems of introduction. These problems can probably be overcome by the approach discussed in Section 7.5. However, the

---

* In general, stationary applications enjoy a greater flexibility of fuel use because of (a) a narrower range of operating conditions, and (b) less need to be concerned with seasonal variations that impose fuel quality requirements on automotive fuels, e.g., satisfactory flow properties at low ambient temperatures.

** Since it would involve forecasting all forms of energy supply and demand.

incentive for using this approach depends on the capacity of the new fuels to better the cost and performance of diesel fuel. This incentive remains to be established.*

7.5 The Fleet Account Stratagem

To the fuel supplier, a fleet account is the operator of a number of vehicles who purchases fuel in bulk. The vehicles may be buses, trucks, taxi cabs, police cars, etc. The operator may purchase fuel from more than one supplier, and may require the fuel to meet his own specifications. Purchases are often made by annual contracts signed after competitive bidding.

Fleet accounts are often used for test purposes by the developers of improved fuels and lubricants. An important characteristic of the fleet account is that the type of fuel (or lubricants) used may be controlled because it may be dispensed only from the operator's fuel storage. This type of fleet will not re-fuel elsewhere. All maintenance will be performed at the operator's garage, and proper records of fuel consumption, etc., will be kept. Also, the fuel supplier may send his own trained personnel to inspect the vehicles under test and to make appropriate measurements Clearly, a fleet account provides the opportunity for testing under controlled conditions with statistical replication, etc. Thus, the fleet account offers one means by which a new fuel may be introduced while side-stepping most of the difficulties discussed in Section 7.1. Theoretically, 100% methanol fuel or a methanol/gasoline blend could be marketed first to a growing number of fleet accounts before being offered to the general public.

Some limitations must also be considered. As a first approximation, about 10% of all highway fuel may be sold to fleet accounts. However, some of these accounts are too small to be considered as potential customers for new fuels at least in the early stages of introduction. Other accounts will be poorly located with respect to the delivery of a new fuel. Still others will operate vehicles with engines (e.g., diesel) for which the new fuel is unsuited. In total, it is guesstimated that a maximum of about 5% of total automotive fuel demand might be satisfied with a new fuel supplied to fleet accounts. Hence, this introductory strategy:

(a) offers a way of accomplishing initial commercial introduction of a new fuel, and

(b) defers the problem of how to introduce a new fuel to the general public

---

* The matter cannot be decided without detailed consideration of the prime-movers that would use the new fuels. Such consideration is outside the scope of this contract.

Clearly, the approach also offers a way of introducing new prime movers under controlled conditions. A great advantage is that any operating problems could be detected and corrected professionally, thereby avoiding the backlash that might be expected from the general public if exposed to malfunctioning vehicles or fuels. Thus, experience gained from fleet operations is a way of de-bugging automotive equipment and fuels prior to full-scale commercial promotion.

7.6 Automotive Hydrogen

In a paper (7-1) presented at a conference on "The Hydrogen Economy", the conclusion was:

> "it is our present conclusion that it is very unlikely that the transportation system will evolve of its own accord in the direction of using hydrogen as a fuel for private vehicles; moreover, government intervention to alter this state of affairs in favor of the hydrogen system is unlikely to be warranted".

Exactly so. But how could automotive hydrogen be introduced if it were desirable to do so at some future date? The answer to this hypothetical question is predicated by several assumptions. It is taken for granted that vehicles can be powered with hydrogen. It assumes that automotive performance and safety will be satisfactory. It also assumes that the economy will be able to produce hydrogen in the huge quantity needed to satisfy the implied automotive demand.

Automotive hydrogen involves the new engine/new fuel dilemma discussed in Section 7.1. There appear to be at least two ways around the fundamental problem of not being able to sell a new engine to the public unless suitable fuel is widely available. The first way is to use the fleet account stratagem discussed in Section 7.5. The second way involves a scenario whereby hydrogen would be distributed by pipeline throughout the U.S. in place of natural gas. Leaving aside the credibility of this scenario, it is then possible to argue that gaseous hydrogen would be widely available. For hydrogen to be delivered to vehicles as a liquid, it would be necessary for fuel supply points to have storage for cryogenic hydrogen or, perhaps, to be able to liquefy it directly from a gas pipeline. While technically feasible, it would seem that a new fuel distribution system would be needed and that this would add a significant cost relative to automotive fuels that are compatible with the existing distribution system. These costs were discussed in Section 4.3.

In summary, the introduction of automotive hydrogen appears extremely difficult. While evolutionary paths can be hypothesized, commercial incentives are missing at this time.

7.7 Labor Force Requirements and Implications

The mining operations of the domestic synfuel industries are likely to be concentrated in the Mountain states. This is certain for oil shale and highly probable for (Western) coal. Current levels of mining activity in the Mountain states are far below what will be required to support a synthetic fuels industry. Moreover, the prospective mining sites in the West are distant from population centers. Hence, consideration should be given to the size of the mining labor force that may be needed in the future and to any implications that may be drawn.

Some recent statistics for the U.S. coal industry are reported in Table 7-1. Last year, the average productivity of strip mining was 35 ST/man/day and the average number of days worked was 227. Hence, the average strip miner produced about 8000 tons of coal. It is anticipated that large strip mines in the West will enjoy a higher productivity. On the other hand, the rank of coal mined will be lower than the current U.S. average. Thus, future productivity may stay close to 8000 T/man/yr. when corrected to the heat content oi bituminous coal. This was the basis used in Section 3.3 for estimating the raw coal requirements of the coal-based segments of the future synfuel industries. These figures may be converted to a very approximate future requirement for coal miners in the Western states:

Year	Raw Coal Need For Synfuels, MM ST*	Surface Miners Required (1000)
1985	163	21
1990	343	43
1995	692	87
2000	1024	129

* In terms of 11,500 BTU/lb. bituminous coal.

The above figures do not take account of the labor force required to mine coal for other purposes than synthetic fuels. Nor do they consider the requirements of the future oil shale industry. Finally, and perhaps most important, an increase in mining may be expected to have a multiplier effect on jobs and population growth in the Mountain states. Some evidence on this point comes from an article in the 1973 Annual Report of the Wyoming Bancorporation*:

> "Wyoming non-farm wage and salary employment increased from 118,900 in December 1972 to 127,000 in December 1973, up 7.4%. ....Numerically, Wyoming's major employment gains were registered in contract construction (up 3,200 workers); services (up 1,800); trade (up 1,700); mining (up 900); government (up 800); and transportation and public utilities (up 600)...."

---

* "The Wyoming Economy", Dr. Dwight M. Blood, University of Wyoming.

TABLE 7-1

RECENT PRODUCTION AND LABOR STATISTICS FOR U.S. COAL INDUSTRY

	1969	1970	1971	1972	1973
Production (million short tons)					
Strip	197.0	244.1	259.0	275.7	275.3
Auger	16.4	20.0	17.3	15.6	14.2
Underground	347.1	338.8	275.9	304.1	301.5
Total	560.5	602.9	552.2	595.4	591.0
% of Production					
Strip	35.2	40.5	46.9	46.3	46.6
Auger	2.9	3.3	3.1	2.6	2.4
Underground	61.9	56.2	50.0	51.1	51.0
Average Production, ST/Man/Day					
Strip	35.7	36.0	35.7	36.0	34.6
Auger	39.9	34.3	39.0	43.0	41.1
Underground	15.6	13.8	12.0	11.9	11.2
Total	19.9	18.8	18.0	17.7	16.8
Ratio, Strip/Underground	2.3	2.6	3.0	3.0	3.1
Average Number of Days Worked					
Strip	247	236	220	225	227
Underground	224	229	210	227	225
Average Number of Men Working Daily (1000)					
Strip	22.3	28.4	33.0	34.0	35.0
Auger	2.9	3.9	3.4	3.0	2.9
Underground	99.3	107.8	109.3	112.3	119.9
Total	124.5	140.1	145.7	149.3	157.8
% of Labor Force					
Strip	18.0	20.3	22.7	22.8	22.2
Auger	2.3	2.7	2.3	2.0	1.8
Underground	79.7	77.0	75.0	75.2	76.0

Source: Ref. 7-2

The total increase in employment in the categories cited above was 9,000 versus 900 in mining alone. However, much of the impetus was due to the increase in mining activity. Thus, the approximate multiplier for employment was 10.*

The same article reports that, since 1970, the Mountain states have been gaining population at three times the national rate. It also speculates that Wyoming's population will double by the year 2000. One of the consequences of population growth is to place an increased demand on water resources. In low rainfall areas, such as the Mountain states, it seems certain that the competing demands for water by (a) industry, (b) farming and (c) the general public will present very difficult problems to the state governments and to all concerned.

Specialized labor requirements are discussed in Appendix 5. Through 1985, it seems likely that the professional effort needed to design and construct synfuel plants will be a limiting factor. In the longer run, this limitation may be removed only to be replaced by one of a more fundamental nature, namely the balance of natural resources in the Mountain states. Richness in mineral resources may not be adequately matched by water availability for all of the demands, direct and indirect, that are likely to be created by a rapidly growing synthetic fuels industry.

This study does not predict that water availability will limit production of synfuels, but it does recognize this as a possibility that should be taken very seriously.

7.8 Capital Availability and Investment Implications

The capital requirements of the energy industries are discussed in Appendix 5. A major conclusion will be restated, namely that alternative automotive fuels must be considered as a part of a much larger whole. Hence, capital availability for alternative automotive fuels cannot properly be considered in isolation from the availability of capital for energy investments in general. The overall availability of capital would seem to depend on the future profitability of energy investments relative to other investments since it is clear that the energy investments will require capital considerably in excess of what can be generated by the internal cash flow of the energy industries.

At least one general conclusion follows from the postulate that there will be competition for external investment funds by most segments of the economy. The conclusion is that investments will have to be as efficient as possible. The same point stated negatively is that wasteful or unnecessary investments will have to be avoided because such investments

---

* An even higher multiplier was cited in Section 5.1. In fact, the two estimates are mutually compatible because one considers mining while the other involves synthetic fuel production as well.

would subtract capital from projects that are needed. A specific implication is that a duplication of the existing distribution and marketing system will not occur (so as to permit the introduction of fuels not compatible with the existing system) unless there is no alternative. However, this study shows that there is an alternative.

8. INFORMATION GAPS

In the course of assessing the feasibility of coal and shale-derived fuels, it was possible to identify a number of areas where significant information gaps exist. The relative attractiveness of one fuel versus another cannot be discussed with a high degree of confidence until more of these data gaps are filled. The following discussion describes these information gaps, dividing them into research data gaps and other information gaps.

8.1 Research Data Gaps

8.1.1 Fuels From Shale Oil

8.1.1.1 Mining and Retorting

Techniques for underground mining of oil shale are fairly well established, but could certainly stand improvement by the development of equipment which will allow more rapid mining. The room-and-pillar technique should be improved to allow greater recoveries.

The retorting step, although not yet demonstrated commercially, has been checked out in various semi-commercial operations. Improvements can be made in heat transfer, oil recovery, versatility with respect to particle size and oil content of the feed, and, very importantly, in spent shale disposal. The first three areas are under continuing study and improvements will doubtless be demonstrated in the first group of commercial plants (to be constructed on the prototype lease tracts recently made available by the U.S. government).

The question of spent shale disposal is critical to the success of the shale oil industry. It has been possible to stabilize and revegetate spent shale piles in pilot experiments. The key issue is whether large-scale disposal associated with a full-size commercial plant can meet the objectives of:

(1) minimal dust formation

(2) no leaching of minerals by rainfall

(3) reduced water requirement to wet down the shale

(4) effective and permanent revegetation of spent shale

(5) minimal dislocation of local fauna

The development of a shale-oil industry will hinge in great measure on being able to demonstrate these objectives in the first group of plants. If spent shale disposal is accompanied by serious environmental dislocations, the industry cannot grow to the size required by fuel demand.*

* Technology needs for pollution abatement in fossil fuel conversion processes (e.g., coal and shale) are being studied by Exxon Res. & Eng. Co. under a separate E.P.A. contract (8-3).

In view of all of the above concerns, the concept of underground (in situ) retorting is receiving rapidly increasing attention (8-1). It will be necessary to develop an economic, efficient, and environmentally acceptable in situ process if shale oil production is to achieve levels greater than 1-2 MMB/D (see Section 3.5). The important technological issues involve:

(1) use of explosives to create permeability in the formation, allowing effective communication between the combustion front and the rock.

(2) optimum underground "plumbing" for good heat and mass transfer required to achieve acceptable recovery.

It is also essential that the in situ process does not create any new environmental problems, such as subsidence or underground water contamination. A possible compromise between a conventional mining and an in situ technique might involve: (a) partially mining an area, (b) collapsing the excavated area, and then (c) retorting the remaining rock underground. It will probably be necessary to have an in situ technique commercially demonstrated by the early 1980's.

Effort applied to solve environmental problems associated with shale oil has special merit because many other aspects of shale oil production appear favorable even though further experimental confirmation is needed.

8.1.1.2 Upgrading and Refining

The key process in upgrading is nitrogen (and sulfur) removal. Technology for this step exists, but there is an incentive to develop more efficient denitrogenation catalysts, i.e., systems which lead to a lower hydrogen consumption per unit of sulfur and nitrogen removed.

The alternative to severe upgrading at the mine is to treat the raw shale oil mildly with heat and/or hydrogen. More information is needed on this process with respect to the inter-relationships among viscosity reduction, pumpability (in a pipeline), and storage stability.

There is no published information on the response of shale syncrude to current petroleum refining processes. Based on the composition of such a syncrude, there is no reason to expect any anomalous response. Nevertheless, pilot plant data should be obtained on reforming, hydrocracking, isomerizing, etc., shale fractions. These data can be used to confirm or revise the correlations on which detailed refinery economics are based.

8.1.1.3 Use

For all the shale and coal-derived fuels, there is an urgent need to determine product quality and performance data. In the case of

shale fuels, Tables 4-1 to 4-3 indicate that data are required on combustion properties, low temperature properties, toxicity, and trace metal content.

Engine and vehicle tests are needed for both shale gasolines and distillates over a wide range of operating conditions, including various automotive power plants under development. Such tests should be carried out, in particular, with blends of shale fractions with petroleum and coal fractions. Indications are that shale and coal hydrocarbon fuels will be used in blends with petroleum throughout the time period considered in this study.

8.1.2 Hydrocarbon Fuels From Coal

8.1.2.1 Mining

It was pointed out in Section 5.2 that the development of a coal liquids industry will be based in great measure on the rapid growth in the surface-mining of Western coal. Further improvements in large semi-automated surface-mining equipment could have a very significant effect on productivity. The permanent reclamation of mined land has yet to be demonstrated on a large scale. Problems in this area will be as difficult to solve and as critical to the success of the industry as those associated with spent shale disposal.

Suggestions have been made to develop an in situ coal liquefaction process, analogous to solution mining (8-2). Conceptually, a coal-derived solvent would be pumped, hot and under pressure, into a coal seam to dissolve some of the coal. The process would resemble the solvent refining of coal, with the important difference that the ash would be left in the ground. Theoretically, such a scheme is applicable to fairly deep coal, i.e., as an alternative to conventional underground mining or in situations where such mining is not feasible. This could make such coal an attractive resource for liquefaction. As with in situ shale retorting, there are various environmental, as well as technical, questions which have to be answered before such a process can be assessed.

In situ gasification of coal is also being seriously considered. In the context of this study, it is of importance as a source of CO/H_2 for methanol production.

8.1.2.2 Upgrading and Refining

The major cost in coal liquefaction is due to the hydrogen required to alter the C/H ratio of the coal. This suggests a two-pronged attack aimed at lowering the cost and/or the requirements for hydrogen.

Although the technology for hydrogen production from coal is very similar to coal gasification, the optimum process for one is not

the same as for the other. The objective for hydrogen production is to minimize direct methane production and maximize CO + H_2. Partial oxidation processes, particularly at elevated pressure, are of considerable interest in hydrogen production. The char remaining from gasification processes is an important feedstock in hydrogen production.

Liquefaction research should be directed at minimizing hydrogen consumption. This, in turn, is tied to the development of more selective catalysts, which promote the aromatic ring-opening reactions without concomitant cracking. For example, in the H-coal process, 20% of the BTU's appear in gas by-product. Although liquefaction basically is 40-50 years old, the underlying mechanisms have yet to be unravelled. The major stumbling block has been the very limited knowledge of the chemical structure of coal. Recent advances in analytical techniques are now making it possible to get this much-needed information.

Another important research area in coal liquefaction involves improved techniques for separating the unconverted bottoms from the liquefied product, so as to avoid the need for severe treatment such as coking.

The Fischer/Tropsch process potentially could be an attractive alternate for producing liquid hydrocarbon fuels from coal. More selective catalysts are needed to maximize the yield of liquid product in the naphtha + distillate boiling range. Engineering research is required on the F/T process to allow it to be scaled up efficiently to the production levels required -- i.e., from 5-10 MB/D to 50-100 MB/D.

The refining of coal syncrude calls for the same comments as were made for shale syncrude refining. However, various coal hydrogenation processes produce different quality syncrudes, with varying sulfur, nitrogen, and oxygen content. Similar variability will be caused by using raw coal of different composition. This implies a matching of processes to feedstock quality (as is the case in the refining of crude oils of different composition). This will require versatile catalysts to handle hetero-atom removal, taking account of the fact that the relative proportions of S-, N-, and O- compounds will vary from coal to coal.

8.1.2.3 Use

It is necessary to obtain a complete spectrum of inspection and product quality data on coal liquids. However, in regard to engine performance, the stress should be on coal/shale or coal/petroleum blends.

In generating data on coal liquids, it is important to study as wide a range of materials as possible, representing the various syncrude processes under active development.

8.1.3 Methanol From Coal

8.1.3.1 Manufacture

The major need in this area involves coal gasification to produce the CO + H_2 mixture needed for methanol synthesis. In the long run, the co-product SNG scheme will give way to processes which minimize direct methane production, and which maximize the yield of CO + H_2. Specifically, the need is for high pressure coal gasification to avoid subsequent compression for the methanol-synthesis -- e.g., Lurgi gasification with increased oxygen input or a modified Winkler or Koppers/Totzek process capable of operating at pressures greater than about five atmospheres.

Methanol synthesis is commercially practiced. Nevertheless, there is room for improvement. The synthesis reaction is strongly exothermic, which severely limits conversion per pass. It would be very advantageous to develop a more active catalyst, capable of operating at lower temperatures, coupled with a selective technique for separating methanol from unreacted CO + H_2.

8.1.3.2 Distribution and Use

There are many questions associated with the use of methanol/gasoline blends. First of all, it is critical to define completely the extent of phase separation due to water contamination. A detailed assessment is then needed of the specific precautions required to assure that this contamination does not occur.

Information is also needed on the volatility of methanol/gasoline blends as it affects vapor-lock. Complete information is required on emissions, fuel economy, and driver acceptability for vehicles operating on such blends. The EPA is planning to support a program at the Bureau of Mines aimed at answering these questions.

With regard to pure methanol as a fuel, it is most important to define the changes required in the engine and the vehicle to achieve optimum efficiency and performance. A valid comparison of methanol with hydrocarbon fuels must consider potential performance advantages for methanol.

Methanol is potentially an important fuel for fuel cells, either for direct use or via reforming to hydrogen. As a primary fuel for fuel cells, information is needed on the effect of impurities on fuel cell performance. If the methanol is to be reformed, it is necessary to develop active reforming catalysts which do not involve precious metals, and which could lead to systems whose cost and size is compatible with potential automotive use.

8.2 Other Information Gaps

The need for technical information that relates directly to the production and use of alternative automotive fuels is paralleled by the need for other types of information. This was recognized by the Environmental Protection Agency in a recent Request For Proposal, No. CI 74-0142 of February 26, 1974, titled "Impact Study on the Use of Alternative Fuels For Automotive Transportation". Hence, there is no need to make reference to the information gaps perceived during the present study that have already been identified in CI 74-0142. However, three points will be made for the sake of emphasis:

(1) It is essential to consider automotive fuel alternatives in the context of the economy as a whole. The practical implications of the present feasibility study will be uncertain until this has been done. The proposed impact study is therefore essential.

(2) The future availability of water requires sophisticated and detailed study. Just as the consideration of automotive fuels should not be divorced from other fuel needs, so the availability of water for the production of alternative fuels should not be considered in isolation from the availability and demand for water for all purposes. A study of water requirements should, in fact, be part of a bigger study assessing the total impact of coal and shale mining and conversion industries in sparsely populated areas of the West.

(3) On-going studies should address the proper utilization of all domestic resources including petroleum. It is probable that different resources will be used so that they complement each other, offsetting individual weaknesses and utilizing individual strengths to best advantage. In this context, the alternative is not between all petroleum and no petroleum. The alternative is the progressive complementation of petroleum fuels with fuels from other sources, and the blending of fuel components from different sources if this is the most effective approach.

9. CONCLUSIONS

The conclusions of this study can be classified into four types:

(a) Virtual certainty: Where the evidence and logic are so persuasive that it may be concluded that something will happen.

(b) Dependent on assumptions used: The conclusion is valid only if the assumptions are valid, e.g., that surface mining will be permitted or that the cost of automotive fuels may be adequately compared on an ex-tax basis.

(c) Dependent on contractor's judgment: Many factors affecting long range projections are not forecastable in a rigorous way and must be dealt with by judgment.

(d) Information gaps: One objective of the study is to identify uncertainties that can be resolved by additional work. In effect, such conclusions are recommendations that the necessary work be done.

The conclusions that follow are identified by (a), (b), (c), or (d) to indicate the type of uncertainty associated with it. Unless otherwise noted, the conclusions apply to the 1982-2000 time-frame.

(1) It is feasible and practical to make petroleum-type fuels from coal and oil shale. They are the most attractive alternates to petroleum over the time frame of the study. (a),(c)

(2) Initial production of these petroleum-type fuels is likely within the next 5-7 years. (a)

(3) Automotive fuel components from coal and oil-shale will be blended with petroleum fractions. (c)

(4) For practical purposes, if petroleum-type products from coal and oil shale are blended with petroleum, no product quality problems will be experienced by customers. However, at present, there are many data gaps which will have to be filled. (c),(d)

(5) The potential for product quality problems is greater if unblended coal or shale gasoline distillate is marketed: (c)

- early determination of product quality and other performance data would be essential, but - (d)

- the scenario of unblended fuels is unrealistic (c)

(6) Methanol from coal:

- is a feasible automotive fuel for spark-ignition engines, gas turbines, and fuel cells. (a)

- in spark-ignition engines will require engine and vehicle modification for optimum performance. (a)

- is an excellent gas turbine fuel, particularly suited for stationary turbine applications. (c)

- if used widely as an automotive fuel, in the near and mid-term future, would have to enter the market as a blend with gasoline but, eventually, would be used unblended. (c)

- if used in a modified spark-ignition engine could lead to improved efficiency relative to hydrocarbon fuels. (c)

- used in blends with gasoline could lead to driveability problems unless the system is kept dry, the gasoline is debutanized and the fuel system is modified. (c)

- is a sufficiently probable product that vehicle performance data should be obtained using both methanol/gasoline blends and neat methanols. (d)

(7) Synthetic fuel production from coal and oil shale:

- will not be limited by the size of domestic coal and oil shale resources. (a)

- will be limited initially by the availability of skilled manpower and eventually by water availability and environmental/ecological considerations. (c)

- will make only a minor contribution to automotive fuel supplies in 1985, but has the potential for becoming a major factor by the year 2000. Realization of this potential is critically dependent on a satisfactory resolution of the previous item. (c)

(8) Estimates of fuel costs:

- In the 1982/85 time-frame the cost of shale and coal syncrudes, including a 10% DCF return, will be about $5.50/bbl and $8.00/bbl respectively in 1973 constant dollars. (b)

- At the pump, on an ex-tax basis, the potential alternative automotive fuels are estimated to cost:

	1982		1990	2000
	$/MMBTU	¢/gal	-------$/MMBTU-------	
Shale - gasoline	2.65	31.5	2.60	2.15
- distillate	2.05	26.5	2.00	1.65
Coal - gasoline	3.35	39.5	3.15	2.65
- distillate	2.75	36.5	2.50	2.10
- methanol	3.85	22.0	3.40	2.95

1973 $, ex tax at pump

- The absolute values projected are sensitive to the underlying assumptions. (b)

- The lower cost projected for distillate than for gasoline depends on a gasoline/distillate ratio of about 2:1. (c)

- The present average level of Federal plus state gasoline taxes (about $0.90 per MM BTU) is comparable to the cost differences projected above. Therefore, future taxation of automotive fuels, particularly if different fuels are taxed differently, could have a major impact on what the customer decides to purchase. (b),(c)

(9) The total cost of operating a vehicle of a given size and type throughout its useful life depends on fuel cost. However, differential taxation of vehicles and fuels could result in a different ranking than that obtained from cost calculations that exclude this factor. (b),(c)

(10) Trends in fuel costs:

- after an initial period of high cost, synthetic fuels from coal and shale are expected to decline in cost on a constant dollar basis, reflecting new and improved technology. (c)

- eventually, the more economic synthetic fuel resources will be depleted and costs will rise again. (c)

- the long-term trend in the cost of domestic petroleum is upward. (c)

(11) Petroleum from domestic resources will be available at least through the year 2000 and probably, although to a declining extent, through the year 2025. (c)

(12) Other supplies and forms of energy, such as nuclear power, have the potential for displacing liquid fuels from non-transportation uses. (a)

(13) When such displacement occurs, particularly after 1985, liquid fuels will be released for transportation use. (c)

(14) Automotive fuel questions should not be divorced from energy supply/demand in general. the future demand for aviation fuels is particularly pertinent. (c),(d)

(15) On-going studies should address the optimum utilization of all domestic resources, including petroleum. It is impossible to properly evaluate the impact of alternative fuels without considering petroleum as an integral part of domestic energy supplies. (a)

(16) Many research data gaps were identified. The most important of these point up the need for: (d)

- product quality and performance data on shale and coal-derived fuels, alone or in blends with petroleum, in various types of engines and vehicles.

- an improved process for producing hydrogen from coal.

- a more selective coal hydrogenation process.

- an improved coal gasification process, operating at elevated pressure, which maximizes $CO+H_2$.

- commercial demonstration of spent shale disposal.

- longer-range, an underground shale retorting process, which minimizes environmental problems.

(17) The relative overall attractiveness of coal and shale-derived fuels requires more than the technical feasibility analysis presented in this study. However, this issue will be addressed in an EPA sponsored alternate fuels impact study. (a)

10. REFERENCES

Section 3

(3- 1) "U.S. Energy Outlook", National Petroleum Council, Washington, D.C., 1972.

(3- 2) Coal Age, April 19, 1974, page 5.

Section 4

(4- 1) Cornelius, W. et al., SAE Special Publication SP-263 (1964); page 29.

(4- 2) Hodgson, J. W., 1973 Intersociety Conference on Transportation, Denver, Colorado, Sept. 1973.

(4- 3) Sawyer, R. F. et al., SAE Paper 680401 (1968).

(4- 4) Starkman, E. S., et al., SAE Paper 670946 (1967).

(4- 5) Pearsall, T. J., et al., SAE Paper 670947 (1967).

(4- 6) Starkman, E. S., et al., SAE Paper 660155 (1966).

(4- 7) Newhall, H. K., et al., SAE Paper 660769 (1966).

(4- 8) Faehn, D., et al., SAE Paper 660769 (1966).

(4- 9) Snell, F. D., et al., Encyclop. Ind. Chem. Anal. 5, 291; Interscience Publishers, 1967.

(4- 10) Rosenthal, A. B., SAE Special Publication SP-265 (1964); page 6.

(4- 11) Faith, M. L., et al., "Industrial Chemicals", John Wiley & Sons, 3rd Ed. (1965); p. 343-355.

(4- 12) Perry's Chemical Engineers' Handbook, 4th Ed., page 9-33 (1963).

(4- 13) Frear, G. L., et al., Encyclop. Chem. Tech., 2nd Ed. Kirk-Othmer, Editors, Vol. 2, 258-298; Interscience Publishers, 1963.

(4- 14) Gray, J. T., et al., SAE Paper 660156 (1966).

(4- 15) SAE Special Publication SP-383 (1973).

(4- 16) Newkirk, M. S., et al., "The Boston Reformed Fuel Car", SAE New England Section, Nov. 2, 1971.

(4- 17) Karim, G. A., et al., J. Inst. Fuel, March 1966; p. 109.

(4- 18) Anzilotti, W. F., et al., Ind. Eng. Chem. 46 (6), 1314 (1954).

(4- 19) Escher, W. J. D., "The Case for the Hydrogen-Oxygen Car", Escher Technology Assoc. Publ. PM-21 (1972).

(4- 20) Starkman, E. S., et al., J. Air Pollut. Control Assoc. 20 (2), 87 (1970).

(4- 21) "Fuel Economy and Emission Control", U.S., Environ. Prot. Agency, Report, Nov. 1972.

(4- 22) Murray, R. G., et al., SAE Paper 700608 (1970).

(4- 23) University of Calif. School of Engineering 1972 Urban Vehicle Design Competition, cf. Road Test Magazine, Aug. 1973; p. 58.

(4- 24) Karim, G. A., et al., SAE Paper 730089 (1973).

(4- 25) Same as (4-16).

(4- 26) Hoess, J. A., et al., SAE Paper 690231 (1969).

(4- 27) Heichelheim, H. R., Encyclop. Chem. Tech., 2nd Ed., Kirk-Othmer, Editors, Vol. 13, 364-366; Interscience Publishers, 1967.

(4- 28) Amero, R. C., "Fuels for Transportation", Paper No. ASME-NAFTC-3 presented at the North American Fuel Technology Conference, Ottawa, Canada, May 31, 1970.

(4- 29) Chopez, N., Chem. Eng. 73 (20), 66 (1966).

(4- 30) Felt, A. E., Hydrocarbon Process. 43 (4), 157 (1964).

(4- 31) Fire Protection Guide on Hazardous Materials, National Fire Protection Assoc., 3rd Ed. (1969).

(4- 32) Naval Air Eng. Center, "Ground Support Equipment; Low Pollutant Fuels", NAEC-GSED-59, Sept. 1972.

(4- 33) Malte, P. C., et al., SAE Paper 720685 (1972).

(4- 34) "Knocking Characteristics of Pure Hydrocarbons", Published by ASTM, May 1958.

(4- 35) Eccleston, D. G., et al., U.S., Bur. Mines, Tech. Prog. Rep. 48 (1972).

(4- 36) Engler, M. R., ASME Preprint 69-WA/DPG-3, Nov. 1969.

(4- 37) Snell, F. D., et al., Encyclop. Ind. Chem. Anal., Interscience Publishers, Vol. 14, 233 (1971).

(4- 38) Rosenthal, A. B., SAE Special Report 263, p. 3-9 (1964).

(4- 39) Michel, J. W., ACS Div. Pet. Chem. Prepr. 18 (3), 1 (1973).

(4- 40) Raphaelian, L. A., Encyclopedia of Chem. Technology, 2nd Ed., Kirk-Othmer, Editors; Vol. 11, 166-167 (1966).

(4- 41) Bolt, J. A., SAE Special Publication SP-254; p. 1-13 (1964).

(4- 42) Snell, F. D., et al., Encyclop. Ind. Chem. Anal., Interscience Publishers, Vol. 4, 496 (1971).

(4- 43) Adelman, H. G., et al., SAE Paper 720693 (1972).

(4- 44) Keller, J. G., et al., API Publ. 4082 (1971).

(4- 45) Ebersole, G. D., et al., SAE Paper 720692 (1972).

(4- 46) Fitch, R. E., et al., Consolidated Engineering Tech. Corp. Report CETEC 01800-FR; Feb. 1970 to NAPCA (Contract CPA 22-69-70).

(4- 47) Exxon Chemical Co., Brochure, "Properties of Some Oxygenated Solvents".

(4- 48) Swain, M. R., et al., SAE Paper 729217 (1972).

(4- 49) La Pointe, C. W., et al., SAE Paper 730669 (1973).

(4- 50) Gross, G. P., SAE Special Publication SP-254 (1964).

(4- 51) Lawrason, G. C., et al., SAE Special Publication SP-254 (1964).

(4- 52) Beerbower, A., et al., Am. Soc. Lubr. Eng., Trans. 12 1-20 (1969).

(4- 53) Demeter, J. J., et al., Bur. Mines, Rep. Invest. 5456 (1959).

(4- 54) Bienstock, D., et al., Bur. Mines, Rep. Invest. 5603 (1959).

(4- 55) Bush, A. F., et al., "On the UCLA Hydrogen Car", Report of Engineering Systems Dept., School of Engineering and Applied Science, UCLA, Los Angeles, Calif.

(4- 56) Grobman, J., et al., N.A.S.A. Tech. Memo. NASA TMX-68258, Presented at Working Symposium on Liquid-Hydrogen Fueled Aircraft, May 15, 1973.

(4- 57) Wiswall, R. H., et al., SAE Paper 729210, in 7th Intersociety Energy Conversion Engineering Conference - 1972; p. 1342.

(4- 58) Data by Wiswall, R. H., Brookhaven National Laboratory; Personal Communication from U.S., Environ. Prot. Agency, Sept. 18, 1973.

(4- 59) Barker, L. K., et al., ACS Div. Fuel Chem. Prepr. 16 (1), 97-111 (1972).

(4- 60) Personal Communication from Jensen, H. B., Bureau of Mines, Laramie Energy Research Center, Laramie, Wyoming.

(4- 61) Johns, J. J., et al., ACS Div. Fuel Chem. Prepr. 16 (1), 26-35 (1972).

(4- 62) Quader, S. A., et al., ACS Div. Fuel Chem. Prepr. 16 (1), 36-43 (1972).

(4- 63) Chem. Eng. Mar. 3, 1967; p. 163.

(4- 64) Olin Chemicals Brochure, "Product Data Anhydrous Hydrazine Handling and Storage".

(4- 65) Stewart, W. F., ASME Paper 73-ICP-78 (1973).

(4- 66) U.S., Bur. Mines, Survey, Diesel Fuel Oil, Summer 1972 (November 1972).

(4- 67) U.S., Bur. Mines, Survey, Motor Gasolines, Summer 1972 (January 1973).

(4- 68) U.S., Bur. Mines, Survey, Motor Gasoline, Winter 1972-73 (June 1973).

(4- 69) Brewster, B., et al., "Automotive Fuels and Combustion Problems", presented at SAE Natl. West Coast Meeting, August 19, 1963.

(4- 70) Hoffman, K. (Brookhaven National Labs), presented at U.S., Environ. Prot. Agency Symp., October 14-19, 1973.

(4- 71) Brogan, J. J., SAE Paper 730519 in SAE Special Publication SP-383 (1973).

(4- 72) Schlatter, M. J., SAE Paper 670453 (1967).

(4- 73) Corner, E. S., et al., ACS Div. Water, Air & Waste Chem., Vol. 11, (1), 1971; p. 170.

(4- 74) Diesel and Gas Engine Progress, April 1973; p. 84.

(4- 75) Gardiner, A. W., SAE Paper 730617 in SAE Special Publication SP-379, (1973); p. 1.

(4- 76) Davis, S. R., et al., SAE Paper 730620 in SAE Special Publication SP-379, (1973); p. 36.

(4- 77) Fourth Summary Report, Automotive Power Systems Contractors Coordination Meeting, June 1973, Division of Advanced Automotive Power Systems Development, U.S., Environ. Prot. Agency.

(4- 78) Brogan, J. J., et al., SAE Paper 729125, in Proceedings of the 7th Intersociety Energy Conversion Engineering Conference, 1972; p. 806.

(4- 79) "Report by the Committee on Motor Vehicles Emissions," National Academy of Science, Feb. 12, 1973.

(4- 80) Michels, A. P. J., SAE Paper 729133, in Proceedings of the 7th Intersociety Energy Conversion Engineering Conference, 1972; p. 875.

(4- 81) Fleming, R. D., et al., SAE Paper 710833 (1971).

(4- 82) Adelman, H. G., et al., "Reduction of Automobile Exhaust Emissions with Methyl Alcohol as Fuel," Dept. of Aeronautics and Astronautics, Stanford University.

(4- 82a) Pefley, R. K., et al., "Study of Decomposed Methanol as a Low Emission Fuel", Final Report to U.S., Environ. Prot. Agency, April 30, 1971, Contract No. APCO-EHS 70-118; PB-202 732.

(4- 83) Jennings, F. A., et al., SAE Paper 730804 (1973).

(4- 84) Personal Communication from Hodgson, J. W., University of Tennessee, Mechanical and Aerospace Engineering.

(4- 87) Same as (4-77).

(4- 86) Ninomiya, J. S., et al., SAE Paper 690504 (1969).

(4- 87) Plungis, D., Note presented at First Symposium on Low Pollution Power System Development, Sponsored by U.S., Environ. Prot. Agency, October 14-19, 1973.

(4- 88) McFadden, J. J., Note presented at First Symposium on Low Pollution Power System Development, Sponsored by U.S., Environ. Prot. Agency, October 14-19, 1973.

(4- 89) Aerojet Liquid Rocket Co., Paper presented at First Symposium on Low Pollution Power System Development, Sponsored by U.S., Environ. Prot. Agency, October 14-19, 1973.

(4- 90) Thermo Electron Corp., Paper presented at First Symposium on Low Pollution Power System Development, Sponsored by U.S., Environ. Prot. Agency, October 14-19, 1973.

(4- 91) Scientific Energy Systems Corp., Paper presented at First Symposium on Low Pollution Power System Development, Sponsored by U.S., Environ. Prot. Agency, October 14-19, 1973.

(4- 92) Ortegren, L. G., Paper presented at First Symposium on Low Pollution Power System Development, Sponsored by U.S., Environ. Prot. Agency, October 14-19, 1973.

(4- 93) Michels, A. P. J., Paper presented at First Symposium on Low Pollution Power System Development, Sponsored by U.S., Environ. Prot. Agency, October 14-19, 1973.

(4- 94) Murray, R. G., et al., SAE Paper 719009 (1971).

(4- 95) Frost, C. M., ACS Div. Fuel Chem. Prepr. 16 (1), 73-87 (1972).

(4- 96) Same as (4-60).

(4- 97) Coward, H. F., et al., U.S., Bur. Mines, Bull. 50 (1952); p. 130.

(4- 98) Barnett, H. C., et al., N.A.C.A. Rep. 1300.

(4- 99) Clark, M. B., et al., "Hydrazine-Air Fuel Cell Simplification Studies", Union Carbide Corp., Res. & Dev. Technical Report ECOM-0163-F (October 1968) Contract No. DAAB07-68-C-0163; AD 676 873.

Section 4

(4-100) Fleming, R. D., et al., U.S., Bur. Mines, Rep. Invest. 7806 (1973).

(4-101) Adt, R. R., SAE Paper 739092, in the 8th Intersociety Energy Conversion Conference Proceeding, Aug. 13-16, 1973.

(4-102) Chem. Eng., March 4, 1974; p. 70.

(4-103) SNG Symposium I, Collected Papers, Inst. Gas Technol., March, 1973.

(4-104) Mills, G. A. and Harney, B. M., Chemtech., Jan. 1974; p. 26.

(4-105) "A Hydrog Energy Carrier", 2 vols., Systems Design Institute (N.A.S.A./ASEE) 1973.

(4-106) "Hydrogen and Other Synthetic Fuels", Synthetic Fuels Panel, Federal Council On Science & Technology, R & D Goals Study, Sept. 1972.

(4-107) "Thermochemical Hydrogen Production", The Hydrogen Economy, Miami Energy Conference, Conference Proceedings, Session #11, March 1974.

(4-108) Same as (3-1).

(4-109) Oil Gas J., March 2, 1970; p. 63.

(4-110) Coal Gasification Report by the Federal Power Commission, as given at The Conference on Synthetic Natural Gas at Institute of Gas Technology, Sept. 10-14, 1973.

(4-111) Same as (4-39).

(4-112) Fuinerau, J. A., Prepr., 74th AIChE Meeting, March 11, 1973.

(4-113) Johnson, J. E., "Storage and Transportation of Synthetic Fuels", Report to the Synthetic Fuels Panel, ORNL-TM-4307, Oak Ridge National Lab., September 1972.

(4-114) Chem. Week, Nov. 11, 1972; p. 46.

(4-115) Johnson, J. E., "Economics of Liquid Hydrogen Supply for Air Transportation", presented at Cryogenic Engineering Conference, Atlanta, Ga., August 10, 1973.

(4-116) Brogan, J. J., SAE Paper 730519, in SAE Special Publication SP-383 (1973); p. 31.

Section 4

(4-117) Furlong, L. E., et al., "Emission Control and Fuel Economy", paper presented at the Spring ACS National Meeting, Los Angeles, Calif., April 1, 1974.

(4-118) Same as (4-79).

(4-119) Underkofler, L. A. and Hickey, R. J., "Industrial Fermentations", Section I, Chem. Publ. Co., New York (1954).

(4-120) Personal Communication from P. A. Sipple, Air Products & Chemical Co., Allentown, Pa.

(4-121) Work at U.S. Army Natick Laboratories, Science 184, 524 (1974).

(4-122) Hydrocarbon Research, Inc., "Commercial Process Evaluation of H-Coal Hydrogenation Process", Office of Coal Research, Contract: 14-01-0001-477.

(4-123) Frank, M. E., et al., ACS Div. of Fuel Chem. Prepr. 16 (1), 13-25 (1972).

(4-124) Seglin, L., Encyclopedia Chem. Technology, 2nd Ed. Supplement, Kirk-Othmer Editors (1971) pages 177-198.

(4-125) Hill, G. R., Chem. Technology 2 (5), 292 (1972).

(4-126) "Oil from Coal; Synthetic Liquid Fuels Annual Report of the Secretary of the Interior for 1952", U.S. Bur. Mines, Rep. Invest. 4942 (1953).

(4-127) "Oil from Coal; Bur. Mines; Synthetic Liquid Fuels Program 1944-1955: Part I"; U.S. Bur. Mines, Rep. Invest. 5506 (1959).

(4-128) "Oil from Coal; Synthetic Liquid Fuels, Annual Report of the Secretary of the Interior for 1950", U.S., Bur. Mines, Rep. Invest. 4770 (1951).

(4-129) Wigg, E. E., Am. Petr. Inst. Prepr. 62-72; presented at Am. Petr. Inst. Mtg. (Div. of Refining) May 11, 1972.

Section 5

(5- 1) Same as (3-1).

Section 5

(5- 2) "Final Environmental Statement for the Prototype Oil Shale Leasing Program," Vol. I, U.S. Dept. of Interior, 1973.

(5- 3) Lewis, A. E., "Nuclear In Situ Recovery of Oil from Oil Shale," Lawrence Livermore Laboratories, September 14, 1973; Prepared for AEC under Contract No. W-7405-Eng-48.

(5- 4) Oil Gas J., Sept. 24, 1973; p. 94.

(5- 5) Oil Daily, April 16, 1974, p. 3.

(5- 6) Corner, E. S. and Cunningham, A. R., paper at ACS Natl. Meet., Los Angeles, March 1971.

(5- 7) Wasp, E. J., "Importance of Slurry Pipelines for Western Coal Development," Proceedings of Montana Coal Symposium, Billings, Montana, January 1970.

(5- 8) Consolidation Coal Company, "Summary Report on Project Gasoline, Period: September, 1963 through June, 1969," U.S. Off. Coal Res., R & D Report No. 39, Volume I, Interim Report No. 5.

(5- 9) Oil Gas J., Dec. 3, 1973; p. 29.

(5- 10) Pittsburg and Midway Coal Mining Company, "Economic Evaluation of a Process to Produce Ashless, Low Sulfur Fuel from Coal," U.S., Off. Coal Res., R & D Report No. 53, Interim Report No. 1, Issued June, 1970.

(5- 11) Johnson, C. A., et al., "Present Status of the H-Coal Process," Paper 30, IGT 1973 Coal Symposium.

(5- 12) Yavorsky, P. M., "Synthoil Process Converts Coal into Clean Fuel Oil," Paper 29, IGT 1973 Coal Symposium.

(5- 13) Hoogendoorn, J. C., "Experience with Fischer-Tropsch Synthesis at Sasol," Paper 21, IGT 1973 Coal Symposium.

(5- 14) Tramm, H., "25 Years Fischer-Tropsch Synthesis with Fixed-Bed Catalysts, Present Status and Future Possibilities," Section III - Paper 27, Fifth World Petroleum Congress, 1959.

(5- 15) Johnson, C. A., et al., "H-Coal: Conversion of Western Coals," AIME Prepr. 72-40, AIME Annu. Meet. February 20-24, 1972.

(5- 16) American Oil Company, "Evaluation of H-Coal," OCR Contract 14-01-0001-1188.

Section 5

(5- 17) Same as (4-122).

(5- 18) "U.S. Energy Outlook, Coal Availability," National Petroleum Council, Library of Congress Catalog Card Number: 72-172997.

(5- 19) Plant Description and Cost Estimates, El Paso Natural Gas Co., Burnham I Coal Gasification Complex, prepared by Stearns-Roger, Inc., August, 1972; revised October, 1973.

(5- 20) Rudolph, P. F. H., "The Lurgi Process - The Route to S. N. G. from Coal," presented at the Fourth Synthetic Pipeline-Gas Symposium, Chicago, October 30, 31, 1972.

(5- 21) Farnsworth, J. F. et. al., "Production of Gas from Coal by The Koppers-Totzek Process," Paper 9, IGT 1973 Coal Symposium.

(5- 22) Banchik, I. N., "Winkler Process for Production of Low BTU Gas from Coal," Davy-Powergas, Inc., Lakeland, Florida.

(5- 23) Environ. Sci. Technol. 7 (1973); p. 1002.

(5- 24) Pet. Petrochem. Int. 13 (9), 49 (1973).

(5- 25) "The Oil Import Question," Cabinet Task Force on Oil Import Control, February 1970, Washington, D.C.; p. 278.

(5- 26) Speech by Kelly, J. M., to Washington Coal Club, as reported in Coal News, No. 4206, March 29, 1974; p. 4.

(5- 27) "Your Driving Costs - 1973/1974 Edition"; Pamphlet from American Automobile Association.

Section 6

(6- 1) "Project H Coal", Hydrocarbon Research, Inc., U.S., Off. Coal Res., Project No. 14-01-001-477, 1967.

(6- 2) Same as (4-123).

(6- 3) Seglin, L., Encyclop. Chem. Tech., 2nd Ed., Kirk-Othmer, Editors, Supplement. Vol., 177-198 (1971).

(6- 4) Same as (4-125).

Section 6

(6- 5) Wu, W. R. K., et al., U.S., Bur. Mines, Bull. 633 (1968).

(6- 6) Same as (4-126).

(6- 7) Unpublished data from Bureau of Mines Demonstration Plant Louisiana, Missouri; cf. U.S., Bur. Mines, Rep. Invest. 5506 (1959).

(6- 8) Same as (4-128).

(6- 9) Wigg, E. E., API Annu. Meet. Prepr. 62-72, Presented at the American Petroleum Institute Div. of Refining, May 11, 1972.

(6- 10) "U.S. Energy Outlook: Oil Shale Availability", National Petroleum Council, Washington, D.C., 1973.

(6- 11) Smith, H. W., U.S., Bur. Mines, Bull. 642 (1968).

(6- 12) "Project H-Coal Report", U.S., Off. Coal Res. R & D Report 26 by Hydrocarbon Research, Inc.; Contract No. 14-01-001-477.

(6- 13) Frost, C. M., et al., ACS Div. Pet. Chem. Prepr. 18 (1), 119 (1973).

(6- 14) Fed. Regist. 38 (187); Sept. 27, 1973.

(6- 15) Same as (4-34).

(6- 16) Same as (4-117).

(6- 17) International Critical Tables, Vol. III, p. 287, 395.

(6- 18) Reed, T. B. and Lerner, R. M., SCIENCE 182, 1279 (1973).

Section 8

(8- 1) Same as (5-3).

(8- 2) Chem. Eng. News, April 23, 1973; p. 38.

(8- 3) "Technology Needs For Pollution Abatement in Fossil Fuel Conversion Processes", E. M. Magee and H. Shaw; presented at Symp. on Environmental Aspects of Fuel Conversion Technology, St. Louis, Mo., May 1974 (work performed under E.P.A. Contract No: 68-02-0629).

11. GLOSSARY

antiknock quality of motor gasoline refers to the ability of the fuel to resist spontaneous ignition in localized areas of the combustion chamber. An audible "knock" or "ping" may result from such spontaneous ignition. The tendency to knock is affected by engine operating conditions (speed, temperature, etc.), and this is why the antiknock quality of motor gasoline is measured by two different laboratory engine tests: Research Method and Motor Method. The Research octane numbers and Motor octane numbers determined by these procedures are discussed in Appendix 6 in Volume 3. Many other terms relating to fuel properties are also explained in Appendix 6.

associated-dissolved gas - associated gas is free natural gas in immediate contact, but not in solution, with crude oil in the reservoir; dissolved gas is natural gas in solution in crude oil in the reservoir; nonassociated gas is free natural gas neither in contact with, nor dissolved in, crude oil in a petroleum reservoir.

barrel a liquid volume measure equal to 42 U.S. gallons.

breeder reactor - a nuclear reactor that produces more fissionable material than it consumes. This reactor is sometimes called the fast breeder because high energy (fast) neutrons will produce most of the fissions in current designs.

British Thermal Unit amount of heat required to raise the temperature of one pound of water one degree Fahrenheit. The BTU is a very small unit of measurement, and when one adds up large quantities of energy, one must count in large multipes of the BTU. Thus national energy balances are often expressed in quadrillions (10^{15}) of BTU's.

The approximate BTU equivalents of common fuels are as follows:

Fuel	Common Measure	BTU's
Crude Oil	Barrel (Bbl.)	5,750,000
Natural Gas	Cubic Foot (CF)	1,032
Bituminous Coal	Short Ton (2000 lbs.)	23,000,000
Electricity	Kilowatt Hour (KWH)	3,412

Two trillion BTU's per year are approximately equal to 1,000 barrels per day of crude oil.

capital intensity - is a relative term often used when discussing the extractive and energy industries. The intensity may be measured as the amount of capital that must be invested in order to generate a unit of production. For petroleum refining, a commonly used ratio is "thousand dollars"(of refining investment) per daily barrel of crude oil charging capacity, i.e., $M per B/D. Although subject to

economic controversy, it is generally considered that return on invested capital, rather than net profit per dollar of sales, is of controlling importance in capital intensive industries.

cash bonus payment - a cash consideration paid by the lessee for the execution of an oil or gas lease by a landowner. The bonus is usually computed on a per acre basis.

coal gasification - the conversion of coal to a gas suitable for use as a fuel.

coal liquefaction (coal hydrogenation) - the conversion of coal into liquid hydrocarbons and related compounds by hydrogenation.

committed reserves - of coal refer to the quantities of recoverable coal from a specific deposit or deposits that would be committed to an individual coal conversion project (syncrude and/or syn. gas) over the expected life of the project. Such coal reserves, once committed, would not be available for other purposes. Committed coal reserves are analogous to "dedicated" reserves of natural gas.

condensate - liquid hydrocarbons obtained by the condensation of a vapor or gas produced from oil or gas wells and ordinarily separated at a field separator and run together with crude oil in petroleum refineries.

constant dollars - wherever used in this report, the terms "constant dollars" or "1973 dollars" refer to the purchasing power of the U.S. dollar in the year 1973. These terms are used to provide a measure of comparability (or common denominator) to projections of Gross National Product, costs, revenues, capital requirements, and other financial data which might otherwise be distorted by varying estimates of the unpredictable factor of inflation or deflation in future years. Where used, the term "current dollars" refers to the purchasing power of the U.S. dollar in the year specified, including such inflation or deflation as may have existed at that time.

To convert "constant" to "current" dollars for future years, it is necessary to apply such inflation or deflation factors as the reader deems appropriate. For example, assuming an inflation factor of 40% for the 1970-1975 period, the 1975 "current" dollar could be derived by multiplying the 1970 "constant" dollar by 1.4.

conventional gas - natural gas as contrasted with synthetic gas.

conventional oil - crude oil and condensate as contrasted with synthetic oil from shale or coal.

conversion processes - are used extensively in petroleum refining, and are potentially applicable to the refining of synthetic crudes derived from coal or oil shale. A higher yield of desired products is obtained by conversion of less desired fractions. The most widely used class of conversion processes involves "cracking," i.e., the breaking of higher

molecular weight molecules into fragments of lower molecular weight and boiling point. When such cracking is assisted by a catalyst, it is called "catalytic cracking" or "cat. cracking." When the process is carried out in the presence of hydrogen under pressure, it is called "hydrocracking." The pertinent process units are called "cat. crackers" and "hydrocrackers." If the principal purpose of the cracking process is to reduce the viscosity of the product, it is called "visbreaking" (i.e., "viscosity breaking"). In the presence of hydrogen, the process is "hydrovisbreaking." If the principal purpose of the conversion process is to achieve molecular rearrangements, rather than conversion into lower molecular weight fragments, it is called "reforming." In the presence of hydrogen, the process is "catalytic reforming." This latter process is widely applied to naphtha fractions in order to increase octane number so that the catalytically reformed naphtha product may be used as a motor gasoline blending component. Catalytic reforming involves dehydrogenation and other reactions that have the net effects of increasing the concentration of aromatic hydrocarbons in the product at the expense of paraffins and cycloparaffins and of yielding hydrogen as a by-product. It is a common refining practice to utilize the by-product hydrogen from catalytic reforming for desulfurization ("hydrofining," "hydrodesulfurization," etc.) and for other refining processes that consume hydrogen. When applied to fuel oils, desulfurization may also be referred to as an "upgrading" or "bottoms upgrading" process. Visbreaking, too, is an upgrading process since it improves the quality of the product relative to that of the visbreaker feedstock. The majority of, but not all, petroleum refining processes involve some combination of:

(a) Distillation, i.e., separation by boiling point (and molecular weight).

(b) Cracking, i.e., conversion of higher boiling fractions to lower boiling fractions.

(c) Reforming, i.e., molecular rearrangements without substantial change in boiling point.

(d) Upgrading, i.e., improvement in product quality.

cryogenic techniques - techniques involving extremely low temperatures used to keep certain fuels in a liquid form; i.e., liquefied hydrogen, methane, propane, etc.

depletion allowance - a proportion of income derived from mining or oil production that is considered to be a return of capital not subject to income tax.

distillate - as used in this report refers to "middle distillate," i.e., the mid-boiling range fraction of a conventional or a synthetic crude oil. This is the fraction from which automotive distillate fuels, such as automotive diesel fuel, may be derived. While their specifications differ in detail, automotive diesel fuel and A.S.T.M.

No. 2 fuel oil (or heating oil) are very similar distillate fuel products. Under low temperature conditions (e.g., severe winter), the pumpability of automotive diesel fuel and/or No. 2 fuel oil may be unsatisfactory. In such cases the products may be blended with, or replaced by, A.S.T.M. No. 1 fuel oil (or kerosene). Most commercial aviation jet or gas turbine fuel is a specially refined kerosene. Formerly, kerosene was used as lamp oil; this is now an extremely minor use in the U.S. Kerosene is the "lightest" or lowest boiling middle distillate fuel. From the standpoint of petroleum refining, it is a narrow boiling range cut between naphtha (most of which is converted into gasoline) and "distillate fuel" (i.e., A.S.T.M. No. 2 fuel oil and automotive diesel fuel). In refineries that do not produce kerosene, most of the "kerosene boiling range" hydrocarbons would be included with the "distillate fuel" produced by the refinery, while the lowest boiling hydrocarbons in the kerosene boiling range would be included in naphtha.

dry hole - or "duster" refers to a well that did not encounter deposits of either crude oil or natural gas. It may be noted that a well may find hydrocarbons (and, hence, not be "dry") in insufficient quantities to warrant production. Such a discovery would be termed "noncommercial shows of oil and/or gas." When considering future domestic resources, it is important to recognize that coal and oil shale deposits cannot be "dry," i.e., there is a certainty that the resources exist.

fossil fuel - any naturally occurring fuel of an organic nature, such as coal, crude oil, and natural gas.

fuel cell - a cell that continuously changes the chemical energy of a fuel and oxidant to electrical energy.

hopper car - a car for coal, gravel, etc., shaped like a hopper, with an opening to discharge the contents.

hydrocarbon fuels - fuels that contain organic chemical compounds of hydrogen and carbon.

hydrotreating - the removal of sulfur from petroleum feedstocks by replacement with hydrogen.

high-temperature gas reactor - a nuclear reactor in which helium gas is the primary coolant with graphite fuel elements containing coated particles of highly enriched uranium plus fertile thorium.

in situ - in the natural or original position; applied to a rock, soil, or fossil when occurring in the situation in which it was originally formed or deposited.

light-water reactor (LWR) - nuclear reactor in which water (H_2O) is the primary coolant/moderator with slightly enriched uranium fuel. There are two commercial light-water reactor types--the boiling water reactor (BWR) and the pressurized water reactor (PWR).

liquefaction of gases - any process in which gas is converted from the gaseous to the liquid phase.

liquefied natural gas (LNG) - a clear, flammable liquid both tasteless and odorless; almost pure methane.

liquefied petroleum gas (LPG) - a gas containing certain specific hydrocarbons which are gaseous under normal atmospheric conditions, but can be liquefied under moderate pressure at normal temperatures; principal examples are propane and butane.

metallurgical coal - coal with strong or moderately strong coking properties that contains no more than 8.0% ash and 1.25% sulfur, as mined or after conventional cleaning.

methanol/methyl alcohol (CH_3OH) the lowest member of the alcohol series. Also known as wood alcohol, since its principal source used to be destructive distillation of wood.

narrow cut - is a relative term applied in petroleum refining. Kerosene would generally be considered a narrow cut because of its narrow, or limited, boiling range. A blend of naphtha and kerosene would be considered a wide cut because of its wider boiling range. The word "cut" is associated with the technology of separating hydrocarbons of different boiling point by distillation (or fractionation). The separations are made at specific temperatures or "cut points." The various products from such distillations may be referred to as "cuts" or "fractions." The lowest boiling fraction is withdrawn from the top of the distillation column (tower, fractionator, "still") and may be called an overhead product or simply "overhead." The highest boiling material withdrawn from the bottom of the distillation column is called a residuum, distillation residue, or "bottoms." Residual fuel oil used to be the bottoms product from the distillation of crude oil. However, the need for fuel oils of low sulfur content has led to additional processing steps for residual fuels after their initial separation from crude oil by distillation. Such processes, which include hydrodesulfurization, are often referred to as bottoms upgrading processes and are broadly applicable to conventional and synthetic crude oils.

oil equivalent - refers to the energy content of a particular energy resource in terms of the equivalent amount of energy in the form of petroleum. As the term oil equivalent (O.E.) is commonly used, reference may be to "crude oil equivalent" or to "fuel oil equivalent." In general, the former is applied to primary input energy while the latter is applied to the energy content of products. Unfortunately, the energy contents of "crude oil equivalent" and "fuel oil equivalent" (F.O.E.) are not precisely defined as BTU quantities. Approximately, however, one barrel of crude oil equivalent contains 5.75 million BTU's while one barrel of F.O.E. contains 6 million BTU's.

oil-in-place - original oil-in-place less the cumulative production.

oil shale - a convenient expression used to cover a range of materials containing organic matter (kerogen) which can be converted into crude shale oil, gas and carbonaceous residue by heating (compare shale oil).

original oil-in-place - the estimated number of barrels of crude oil in known reservoirs prior to any production, usually expressed as "stock tank" barrels or the volume that goes into a stock tank after the shrinkage in volume that results when dissolved gas is separated from the oil.

overburden - material of any nature, consolidated or unconsolidated, that overlies a deposit of useful materials, ores or coal, especially those deposits that are mined from the surface by open cuts.

particulate matter - any matter, except water, that exists in a finely divided form as a liquid or solid.

primary fuel - fuel consumed in original production of energy as contrasted to a conversion of energy from one form to another. The heat, or BTU, content of the primary fuel may be referred to as primary input energy. In the conversion of coal (or oil shale) to a synthetic crude, the energy (i.e., heat) content of all of the final products plus the energy used in the conversion process must be equal to the input energy. In electricity generation, the heat equivalent of the electricity generated (3,412 BTU per KW) plus the energy consumed in the generation process is equal to the primary energy input to the generator. In the case of nuclear energy, it is important to distinguish between the heat content of the primary (nuclear) energy input and the heat equivalent of the electricity output. For light water reactors the latter is about one-third of the former, i.e., the electrical conversion efficiency is about 33%. Similar considerations apply to the input and output energies associated with the production of hydroelectricity.

rank of coal - is a term that characterizes the degree of "coalification" that has occurred in a particular deposit and, hence, reflects the average BTU content of the deposit. While there is a broad spectrum of coal composition such that the lines dividing one rank of coal from another are blurred, it is convenient to follow the National Petroleum Council's classification of:

(a) bituminous coal (11,500 BTU/lb., or 23 million BTU/short ton)

(b) sub-bituminous coal (8,500 " " 17 " " ")

(c) lignite (6,750 " " 13.5 " " ")

Most of the U.S. resources of sub-bituminous and lignite coals are in the western states.

retort - a vessel used for the distillation of volatile materials, as in the separation of shale oil from oil shale.

royalty bidding - competitive bidding for leases in which the lease is offered to the company offering to pay the landowner the largest share of the proceeds of production, free of expenses of production. A lease bonus sale is a competitive bidding procedure used extensively by the Federal government wherein the lease for a particular tract of land (or offshore acreage) is awarded to the company submitting the highest bonus bid. The high bidder is then entitled to produce hydrocarbons (or coal, or oil shale) from the particular tract. The Department of the Interior's prototype leasing program for six tracts of oil shale land is being conducted by a combination of bonus bid plus production royalty.

seasonality - is a term used to recognize that the demand for different products may vary throughout the year. For example, the demand for gasoline peaks in the summer while heating oil (i.e., distillate fuel) demand peaks in the winter. When the different products are derived from the same source (i.e., petroleum), the refining operations must have the flexibility of adjusting to variations in seasonal demand for each product. This is accomplished partly by balancing domestic demand with imports, partly by seasonal storage, and partly by changing processing conditions to emphasize the production of one product during part of the year and another product during another part of the year. These adjustments to processing conditions are referred to as seasonal changes in yield pattern.

secondary recovery - oil and gas obtained by the augmentation of reservoir energy; often by the injection of air, gas, or water into a production formation.

shale oil - a liquid similar to conventional crude oil but obtained from oil shale by conversion of organic matter (Kerogen) in oil shale.

stack gas desulfurization - treating of stack gases to remove sulfur compounds.

syncrude - synthetic crude oil derived from coal, oil shale, or tar sands.

syngas - synthetic gas or substitute natural gas (SNG).

synthetic fuel - gaseous or liquid hydrocarbon material produced from solid or liquid carbonaceous material other than petroleum.

tar sands - hydrocarbon bearing deposits distinguished from more conventional oil and gas reservoirs by the high viscosity of the hydrocarbon, which is not recoverable in its natural state through a well by ordinary oil production methods.

tertiary recovery - fluid injection method that will recover oil above that attainable by either natural or artificially induced water displacement.

topping - the distillation of crude petroleum to remove the light fractions only.

unit train - a system developed for delivering coal more efficiently in which a string of cars, with distinctive markings, and loaded to "full visible capacity," is operated without service frills or stops along the way for cars to be cut in and out. In this way, the customer receives his coal quickly and the empty car is scheduled back to the coal fields as fast as it came.

LIST OF ABBREVIATIONS

AEC - Atomic Energy Commission

AGA - American Gas Association

API American Petroleum Institute

B or Bbl - barrel (42 U.S. gallons)

BWR - boiling water reactor

CRG - Catalytic Rich Gas (process)

DCF - discounted cash flow

D.O.I. Department of the Interior

D.O.T. - Dept. of Transportation

EPA - Environmental Protection Agency

FBR - fast breeder reactor

FPC - Federal Power Commission

GW - gigawatt (1000 megawatts)

GNP - gross national product

H_2S - hydrogen sulfide

HTGR - high-temperature gas-cooled reactor

KWH - kilowatt hour

LNG - liquefied natural gas

LPG - liquefied petroleum gas

LWR - light-water reactor

MB/D - thousand barrels per day

MCF thousand cubic feet

MMB/D - million barrels per day

MMCF - million cubic feet

MRG - Methane Rich Gas (process)

MTU - metric tons of uranium

MW - megawatt (1000 kilowatts)

MWe - megawatt electrical generating capacity

NGL - natural gas liquids

NOx - nitrogen oxides

OCS - Outer Continental Shelf

OIP - oil-in-place

OPEC - Organization of Petroleum Exporting Countries

PAD - Petroleum Administration for Defense

PGC - Potential Gas Committee

PWR - pressurized water reactor

R/P - reserves/production (ratio)

SNG - substitute natural gas

SO_2 - sulfur dioxide

ST - short ton

TCF - trillion cubic feet

TVA - Tennessee Valley Authority

USGS - U.S. Geological Survey

Notes: (1) The above Glossary and list of abbreviations draw heavily from the NPC's "U.S. Energy Outlook," December 1972.

(2) Depending on context, B/D may imply Barrels per Stream Day (B/SD) or Barrels per Calendar Day (B/CD). The latter may be annualized by multiplication by 365. The former applies to the capability of a plant while it is operating at full capacity. However, all plants are shut down occasionally for routine maintenance and other reasons. Many petroleum units achieve an operating factor of about 90-92%. This is equivalent to 330-335 Stream Days per Calendar Year. Thus, at an operating ratio of 90%, 0.9 B/CD is equivalent to 1 B/SD.

TECHNICAL REPORT DATA
(Please read Instructions on the reverse before completing)

1. REPORT NO.	2.	3. RECIPIENT'S ACCESSION NO.
EPA-460/3-74-009-b		

4. TITLE AND SUBTITLE	5. REPORT DATE
Feasibility Study of Alternative Fuels for Automotive Transportation - Volume II, Technical Section	June 1974
	6. PERFORMING ORGANIZATION CODE
7. AUTHOR(S)	8. PERFORMING ORGANIZATION REPORT NO.
F. H. Kant, R. P. Cahn, A. R. Cunningham, M. H. Farmer, W. Herbst, E. H. Manny	
9. PERFORMING ORGANIZATION NAME AND ADDRESS	10. PROGRAM ELEMENT NO.
Exxon Research and Engineering Co. P.O. Box 45 Linden, New Jersey 07036	1A2017
	11. CONTRACT/GRANT NO.
	68-01-2112
12. SPONSORING AGENCY NAME AND ADDRESS	13. TYPE OF REPORT AND PERIOD COVERED
Environmental Protection Agency Office of Mobile Source Air Pollution Control Alternative Automotive Power Systems Division 2929 Plymouth Road, Ann Arbor, Michigan 48105	Final June 1973-June 1974
	14. SPONSORING AGENCY CODE

15. SUPPLEMENTARY NOTES

16. ABSTRACT

This study identifies feasible and practical alternatives to automotive fuels derived from petroleum for the 1975-2000 time period. The alternative fuels are liquids derived from domestic coal and oil shale -- specifically, gasolines, distillates, and methanol. While many uncertainties remain, initial production of the new fuels is likely within the next five to seven years.

17. KEY WORDS AND DOCUMENT ANALYSIS

a. DESCRIPTORS	b. IDENTIFIERS/OPEN ENDED TERMS	c. COSATI Field/Group
Automotive fuels Substitutes Feasibility Forecasting Oil-shale Methyl alcohol Gasoline	Automotive Fuels Non-petroleum fuels Synthetic gasolines Coal liquids	13 B

18. DISTRIBUTION STATEMENT	19. SECURITY CLASS *(This Report)*	21. NO. OF PAGES
	Unclassified	238
Release Unlimited	20. SECURITY CLASS *(This page)* Unclassified	22. PRICE

EPA Form 2220-1 (9-73)