EPA-460/3-74-009-c

June 1974

FEASIBILITY STUDY OF ALTERNATIVE FUELS FOR AUTOMOTIVE TRANSPORTATION

VOLUME III - APPENDICES

U.S. ENVIRONMENTAL PROTECTION AGENCY
Office of Air and Waste Management
Office of Mobile Source Air Pollution Control
Alternative Automotive Power Systems Division
Ann Arbor, Michigan 48105

EPA-460/3-74-009-c

FEASIBILITY STUDY OF ALTERNATIVE FUELS FOR AUTOMOTIVE TRANSPORTATION

VOLUME III - APPENDICES

Prepared by

F. H. Kant, R. P. Cahn, A. R. Cunningham,
M. H. Farmer, W. Herbst, and E. H. Manny

Exxon Research and Engineering Co.
P. O. Box 45
Linden, New Jersey 07036

Contract No. 68-01-2112

EPA Project Officer:

C. E. Pax

Prepared for:

U.S. ENVIRONMENTAL PROTECTION AGENCY
Office of Air and Waste Management
Office of Mobile Source Air Pollution Control
Alternative Automotive Power Systems Division
Ann Arbor, Michigan 48105

June 1974

This report is issued by the Environmental Protection Agency to report technical data of interest to a limited number of readers. Copies are available free of charge to Federal employees, current contractors and grantees, and nonprofit organizations - as supplies permit - from the Air Pollution Technical Information Center, Environmental Protection Agency, Research Triangle Park, North Carolina 27711; or may be obtained, for a fee, from the National Technical Information Service, 5285 Port Royal Road, Springfield, Virginia 22151.

This report was furnished to the U S. Environmental Protection Agency by Exxon Research and Engineering Co. in fulfillment of Contract No. 68-01-2112 and has been reviewed and approved for publication by the Environmental Protection Agency. Approval does not signify that the contents necessarily reflect the views and policies of the Agency. The material presented in this report may be based on an extrapolation of the "State-of-the-art." Each assumption must be carefully analyzed by the reader to assure that it is acceptable for his purpose. Results and conclusions should be viewed correspondingly. Mention of trade names or commercial products does not constitute endorsement or recommendation for use.

Publication No. EPA-460/3-74-009-c

FOREWORD

For convenience, the material covered in this report is divided into three volumes. Volume I is an executive summary comprising the report summary, highlights of the various sections and a list of conclusions. Volume II is the technical section, which is a complete description of the work carried out under this contract. It includes the sections bound separately in Volume I. Volume III includes the appendices, which deal with supplementary material for some of the topics discussed in Volume II.

APPENDICES

TABLE OF CONTENTS

Number	Title	Page
1	BACKGROUND CONSIDERATIONS	1
2	TRANSPORTATION FUEL DEMAND	10
3	RESOURCE BASE INFORMATION	35
4	POSSIBLE APPROACH OF OTHER COUNTRIES TO ALTERNATIVE TRANSPORTATION FUELS	62
5	BUILD-UP OF SYNTHETIC FUELS MANUFACTURING CAPACITY	63
6	SIGNIFICANCE OF FUEL PROPERTIES	91
7	BASES FOR CAPITAL RECOVERY	97
8	REFINING OF SHALE AND COAL SYNCRUDE	102
9	COAL MINING COSTS AND INVESTMENTS	119
10	COST OF OPERATING AN AUTOMOBILE	126

APPENDIX 1

BACKGROUND CONSIDERATIONS

The material in this appendix supports and elaborates parts of the summary of background considerations in Section 3 of Volume 2. Other parts of this summary are supported by Appendices 2, 3, and 5.

Project Independence

The concept of "Project Independence" is that domestic resources should be developed quickly thereby making oil imports unnecessary. However, in view of the 36% level of dependency on foreign petroleum in 1973, "independence" will not come quickly. Moreover, as pointed out by Dr. Dixy Lee Ray and others, "independence" has not been precisely defined. It does not necessarily mean no imports at all and, in the view of some, including officials of the Federal Energy Administration, it could mean a continuation of significant importation of petroleum from Western Hemisphere countries such as Canada, Venezuela, Trinidad, and Ecuador. Nevertheless, the common objectives are to develop indigenous resources more fully, to use them more efficiently, and to do these things in environmentally acceptable ways.

Although analysis of petroleum imports is outside the scope of the alternative automotive fuels study, such imports are of critical importance in the determination of how synthetic fuels industries will develop in the U.S., i.e., what needs these industries will be designed to meet. For example, the first coal gasification plants will not make any automotive fuels, but rather substitute natural gas (SNG). Additional gasification plants may produce methanol, but the product may be used as an industrial, rather than as an automotive, fuel. Analogously, it is not certain that the initial synthetic liquids plants will produce automotive fuels since low sulfur fuel oils are a plausible alternative.

Thus, "Project Independence" is the "forcing function" or "controlling externality" for the present study*. However, additional work (e.g., in the intended impact study) will be needed to establish quantitative relationships between alternative automotive fuels and the concept of "energy independence".

The Administration has begun work on "Project Blueprint", which will be the action plan for achieving self-sufficiency in energy.

---

* Quoting from the RFP of March 1973 which led to the present study: "... the forcing function ... is the anticipated scarcity of domestic petroleum and the economic penalties and energy-security problems associated with greatly increased petroleum importation ..."

Projections of Automotive Fuel Demand

It is helpful to have order of magnitude projections of the future demand for automotive fuels so as to provide a semiquantitative context for consideration of the rate at which synthetic fuel capacity may be required.

Early in 1974, and constrained by the Arab oil embargo, U.S. automotive fuel consumption approximated 6 MMB/D. This level may be taken as an approximate lower bound of future automotive fuel consumption. Evaluation of the factors that could limit future consumption to this level are beyond the scope of the present study. However, simple arithmetic shows what future consumption would be at different hypothetical growth rates from a base of 6 MMB/D:

	Average Daily Consumption, MMB/D			
Annual Growth Rate	1%	2%	3%	4%
Year				
1985	6.8	7.6	8.6	9.6
1990	7.1	8.4	9.9	11.7
1995	7.5	9.3	11.5	14.2
2000	7.8	10.2	13.3	17.3

The above figures are not predictions of future automotive fuel demand. Their purpose is to provide a numerical "grid" for the discussion that follows:

The usual approach to forecasting future fuel demand is first to project the future vehicle population. One such projection is given in Table 1. The next step is to apply assumptions concerning miles driven and fuel economy for the various segments of the vehicle population. This leads to the projection of fuel demand shown in Table 2. These projections may be characterized as the probable minimum consumption that would have occurred if previous trends* had continued. Although "minimum" in this specific sense, the projections may also be regarded as giving room for economies and efficiencies if such are the Nation's will. In this sense, the projections may be viewed as the maximum consumption of automotive fuels likely to occur if reasonable efforts are made in support of "Project Independence." In this context, the projections set an approximate upper bound on the future need for alternative automotive fuels.

* Prior to the Arab oil embargo and general recognition that the United States is in the middle of an energy problem.

APPENDIX 1

TABLE 1

PROJECTION OF U.S. VEHICLE POPULATION

	Vehicles at End of Year (Millions)				
	Gasoline		Distillate	Gasoline & Distillate	
Year	Passenger Cars (1)	Trucks & Buses (2)	Trucks & Buses (2),(3)	Vehicle Subtotal	Total (4)
1970	89.3	16.7	.784	106.8	108
1971	92.1	17.1	.883	110.1	112
1972	94.6	17.6	.939	113.1	115
1973	97.0	18.1	1.00	116.1	118
1974	99.5	18.6	1.05	119.7	121
1975	102.0	19.2	1.11	122.3	124
1976	104.4	19.8	1.17	125.4	127
1977	106.6	20.5	1.24	128.3	130
1978	108.7	21.0	1.30	131.0	133
1979	110.7	21.5	1.38	133.6	136
1980	112.8	22.1	1.44	136.3	138
1982	116.9	23.1	1.61	141.6	144
1984	121.0	24.0	1.79	146.8	149
1985	123.1	24.5	1.89	149.5	152
1986	125.1	25.0	1.98	152.1	154
1988	129.1	26.2	2.19	157.5	160
1990	132.6	27.4	2.44	162.4	165
1995	140.2	29.5	3.20	172.9	175
2000	149.8	31.5	4.09	185.4	188
2010	164.4	34.4	7.07	205.9	209

(1) 1970-2000 from Figure 7 in Reference (1).

(2) Total trucks and buses extrapolated from historical data 1960-1972, Reference (2).

(3) Diesel trucks and buses calculated from highway diesel fuel consumption assuming the annual fuel consumption per vehicle = 8,000 gals.

(4) Subtotal corrected to allow for public vehicles excluded from other categories.

(5) Projections assume no radically new engines, e.g. the projections for distillate fuel actually refer to diesel fuel.

EPA-460/3-74-009

APPENDIX 1

TABLE 2

PROJECTIONS OF FUEL CONSUMPTION BY U.S. VEHICLE POPULATION

	Billions of Gallons During Year				
	Gasoline		Distillate	Gasoline & Distillate	
Year	Passenger Cars (1)	Trucks & Buses (2)	Trucks & Buses	Vehicle Subtotal	Total (3)
1970	65.5	21.0	6.27	92.8	94
1971	68.3	21.8	7.05	97.2	98
1972	70.7	22.8	7.50	101.0	102
1973	73.1	23.6	8.00	104.7	106
1974	75.6	24.1	8.41	108.1	109
1975	79.0	24.4	8.85	112.3	113
1976	81.4	24.7	9.33	115.4	117
1977	84.0	25.1	9.90	119.0	120
1978	86.1	25.6	10.4	122.1	123
1979	89.2	26.0	11.0	126.2	127
1980	91.4	26.7	11.5	129.6	131
1982	96.1	26.9	12.9	135.9	137
1984	101.5	27.6	14.3	143.4	145
1985	103.8	27.9	15.1	146.8	148
1986	106.1	28.1	15.9	150.1	152
1988	109.8	28.6	17.5	156.9	158
1990	113.2	28.7	19.5	161.4	163
1995	121.9	29.5	25.5	176.9	179
2000	132.5	29.8	32.7	195.0	197
2010	148.8	23.5	56.5	229.8	232

(1) Calculated from Tables XV (total miles driven) and XVII (minimum fuel consumption) of the Mitre Corporation's Report No. MTR-6391, April 1973 (Reference 1).

(2) Calculated by difference from trend projection of total automotive fuel used by trucks and buses and a forecast of automotive diesel fuel demand based on API's "Petroleum Facts and Figures."

(3) Subtotal corrected to allow for public vehicles excluded from other categories.

EPA-460/3-74-009

The figures in Table 2 are summarized below in different units. The implicit growth rates in demand in the lower half of this table may be compared with those in the "grid" above. A possible implication is that any projections of automotive fuel consumption above about 9.5 MMB/D in 1985 or 12.5 MMB/D in the year 2000 would be inconsistent with "Project Independence". These figures are a guide to the size of the effort required first to supplement and later to replace conventional automotive fuels with alternative fuels.

	Total Highway Fuel Consumption				
Year	Billion Gallons	Approx. % Distillate	Billion Barrels	MMB/D	10^{15} BTU
1970	94	7	2.24	6.1	12.0
1975	113	8	2.69	7.3	14.2
1980	131	9	3.12	8.6	16.8
1985	148	10	3.52	9.6	18.8
1990	163	12	3.89	10.6	20.8
1995	179	14	4.27	11.7	22.8
2000	197	17	4.69	12.8	25.0

- A D.O.T. projection discussed in Appendix 2 is 160 billion gallons for highway use. The close agreement of the numbers is not surprising since both projections were made by trend extrapolations.

- Implicit growth rates:

	% per year
1970/1975	4.0
1975/1980	2.9
1980/1985	2.6
1985/1990	2.0
1990/1995	2.0
1995/2000	2.0

Cost Trends for Petroleum-derived Fuels

Despite the familiarity of the words, few subjects are more difficult to deal with than future "costs" and "prices". An elementary concept is that "price" should be equal to "cost" plus a reasonable profit to whomever will provide the article that is sold. Some of the practical difficulties with this concept are that:

(a) There is no way of determining what a "reasonable profit" should be.

(b) Even if "reasonable profit" could be quantified, it is not evident how the appropriate profit margin could be fixed (i.e., no more and no less) in a competitive economy.

(c) It is generally accepted that some undertakings merit (the opportunity of) higher profit margins to compensate them for high risks in their particular line of business. This "risk/reward" concept is important in exploration for petroleum. However, there is no quantitative agreement on what risk/reward ratios should be in one line of business relative to another, e.g., automobile manufacture versus petroleum exploration versus coal production.

(d) In the real world, profit margins vary greatly such that some enterprises are able to expand while others go into bankruptcy. This is an essential part of the competitive system.

(e) All of the above considerations are complicated further in an inflating economy because most investments "pay off" over a period of years long after the pertinent investment has been made. With inflation, the real value of the return in later years must be discounted relative to the value of the money when it is invested. However, investments must be made without precise knowledge of what future inflation will be.

An entirely different set of difficulties relates to the variation in price for a given material depending on what type of sale is made, e.g.:

(a) Whether the sale is "spot" or is made as part of a long-term contract.

(b) The quantity sold, e.g., 100,000 barrels or 10 gallons. Clearly, the marketing cost depends on the amount of effort required to sell a unit of production. This, of course, is why retail prices are usually much higher than wholesale prices.

(c) Price variations in different parts of the country that tend to reflect different logistics and, now in the case of petroleum, different underlying costs for domestic and imported oil.

This brief account of difficulties is needed as background for explanation of ways in which costs are treated in this study. The approach is similar to that used by the National Petroleum Council.

NPC deals with <u>domestic</u> "prices" in terms of "the average unit revenues required to support assumed ranges of activity levels, given an assumed range of investment returns". NPC's "price" projections to 1985, in terms of <u>1970</u> dollars and relative to average prices in 1970 were:

- oil at the wellhead: up 60-125%
- gas at the wellhead: up 80-250%
- coal at the mine: up about 30%
- U_3O_8 at the mine: up about 30%

Regarding foreign oil, the NPC said "there is no assurance that foreign energy will cost less in the future than domestic supplies".

For uniformity in this study, all of the economic calculations for alternative fuels derived from coal or oil shale were based on cost-plus-10% DCF return. This approach gives an indication of a future price level, assuming a high degree of competition in the synthetic fuels industry of the future. The underlying consideration is that the new industry will not attract capital for investment if the opportunity for profit is substantially less than that obtainable for alternative investments. A parallel consideration is that if, at some point, the new industry is significantly more profitable than alternative investments, then additional capital will flow into investments in synthetic fuels thereby increasing competition and lowering the profitability to the average experienced in comparable types of industrial activity.

It is important to recognize that there is no chance of a "dry hole" with either coal or oil shale. The exact extent of a particular coal deposit may not be known when it is leased, but there will be an absolute certainty that the resource exists. This is not the case in wildcatting for petroleum. All that will be known is that a favorable geological structure exists; it will not be known whether the structure contains any petroleum until after expensive drilling has been carried out.

It is also important to recognize that, historically, much of the exploration for petroleum in the U.S. has been by "independents" (as distinct from major companies with "integrated operations", i.e., refining and marketing as well as exploration and production). It is questionable whether a 10% DCF return is sufficient to attract a high degree of exploration activity by independents. All that is possible in this study is to illustrate the effect on the required price for domestic crude oil of making different assumptions concerning DCF return. Additionally, and solely for the purpose of illustrating an effect, it is possible to show how elimination of percentage depletion would affect the price of domestic crude oil at a given DCF return. The following estimates were developed from NPC's Case 1*, and are indicative of costs projected up to 1985:

	Average Wellhead "Price"* of Domestic Crude Oil
With 22% Depletion Allowance	
10% DCF return	$6.00 per bbl. (approx.)
15% " "	$8.00 " " "
Without Percentage Depletion	
10% DCF return	$6.60 per bbl. (approx.)
15% " "	$8.80 " " "

* "Price" = cost plus DCF return (1973 $)

* High drilling rate combined with high finding rate.

The search for domestic crude oil is moving into more hostile and higher cost environments:

- in the Arctic
- farther offshore and in deeper water
- greater drilling depths onshore and offshore.

In general, it is anticipated that the "easier" or lower cost prospects will be explored before the more difficult ones. The consequence of this assumption is that there will be a secular or long-term trend to higher costs. Thus, by 1990 or the year 2000, the cost of domestic petroleum, particularly of new oil, may be significantly higher than the estimates given above for the period up to 1985. This leads to an important implication: namely, that the cost of fuels made from resources such as coal and oil shale may decline (on a constant dollar basis) as pertinent new technology is developed whereas the cost of conventional petroleum will increase.

It is not suggested that the cost of domestic petroleum will follow a smooth upward curve. Indeed, under a competitive system, variations in cost and price are to be expected as Alaskan and offshore resources are exploited to a much greater extent than at present. What may be inferred from the expected secular uptrend in petroleum costs are that:

(a) Other materials or forms of energy will be developed to replace petroleum in many of its current uses.

(b) The way in which petroleum is used will shift progressively to applications in which, despite higher absolute cost, petroleum is still the lowest cost alternative.

APPENDIX 1

REFERENCES

(1) "Energy/Environmental Factors in Transportation 1975/1990", Report MTR-6391, Mitre Corp., April 1973.

(2) Automotive Industries/Statistical Issues, March 1970 and April 1973.

APPENDIX 2

TRANSPORTATION FUEL DEMAND

This appendix discusses parts of three recent reports by (a) the Department of the Interior, (b) the Department of Transportation, and (c) Oak Ridge National Laboratory. In the case of (a), the purpose is to tie the present automotive fuels study to a widely used forecast of energy supply/demand. For (b) and (c) the prupose is to focus attention on areas of controversy and uncertainty. In doing this, it is realized, firstly, that the material discussed is separated from its context in the respective D.O.T. and ORNL reports and, secondly, that the discussion given here is not a balanced critique of the individual reports. It is hoped that the authors of the D.O.T. and ORNL studies will be understanding of the special use to which their studies have been put.

Some of the specific issues covered in this appendix are:

- the approach taken to petroleum imports and domestic based synthetic fuels
- problems associated with extrapolation of past trends into the distant future
- projection of future aviation fuel demand and its implications for automotive fuels
- consideration of the possible changes in definition of a family or "standard" car and the implications for automotive fuels
- concepts regarding the relationship between economic parameters, such as GNP and the transportation sector
- apparently significant errors in published information or in its interpretation.

The overall conclusions are:

(1) the D.O.I.'s energy forecast of December 1972 is a useful quantitative context for the present study.

(2) post-1985, synthetic fuels from domestic resources will have to substitute for much of the nation's energy supply projected by the D.O.I. to be provided by imported foreign petroleum.

(3) a number of questions, discussed but not resolved here, appear important to alternative automotive fuels and, hence, require additional study.

Department of Interior Energy Forecast

In December 1972, the Department of the Interior published a report titled "United States Energy through the year 2000" (1). The information in this report may be modified to provide an overall energy context for the present study. The D.O.I. forecast had been appraised in a report to the Engineering Analysis Branch of the EPA (2). A few points from this appraisal that are particularly pertinent to the present study are recapped below:

- The D.O.I. forecast of total U.S. energy demand falls in between the National Petroleum Council's (NPC) low and intermediate projections (3). For the present purpose, this makes it convenient to turn to the massive NPC study for cost and financial data while using D.O.I.'s easier-to-understand forecasts of supply and demand.

- It is necessary to consider the possibility that only some lower level of supply will be available. Such a shortfall, relative to the D.O.I. forecast, could occur for a variety of reasons. Here, it is useful to distinguish among:

  (a) Shortfall in supply sectors such as petroleum and nuclear power, which would place an additional supply burden on coal and shale.

  (b) Shortfall in coal, which would shift the supply burden to petroleum and nuclear energy.

  (c) Shortfall in all primary energy sources, which would limit consumption.

- The magnitude of the difficulties on the supply side compels the conclusion that a comparable effort will have to be made to improve the efficiency of energy use and discourage wasteful and unnecessary consumption.

As the above considerations apply to the present study, it may be noted that:

- The main purpose is to investigate the feasibility of synthetic or "new" automotive fuels.

- For the time-frame of greatest interest, 1985-2000, and later, it is reasonable to assume that any deficit in petroleum fuels may have to be corrected by alternative fuels derived from other domestic resources (coal, shale, nuclear energy).

Thus, implicit in the study is the concept that conventional petroleum fuels may not be able to supply all of the future transportation needs of the nation. This makes it possible to distinguish between domestic and imported petroleum, and to argue that the former will be used to satisfy transportation and other needs to the extent of its availability. In concept, synthetic and "new" automotive fuels from domestic resources may be substituted for what the D.O.I. has projected to be supplied via petroleum imports. An assumption of no petroleum imports after 1985 is actually a contingency case in which the excess of trend-projected demand over domestic supply (with conventional petroleum fuels) would have to be satisfied by some combination of:

- Efficiencies in the automotive sector, i.e., a demand lower than that obtained by trend-projection.

- Synthetic and "new" fuels from domestic resources.

This assumption is not a prediction of zero petroleum imports after 1985; rather it provides the basis for scoping the dimensions of the problem that would occur without such imports. To the extent that imports are possible, the volumes of synthetic fuels needed would be reduced but the nature of the steps required would not be changed. It is quite clear that greater efficiencies alone will not achieve a supply/demand balance without either synthetic fuels or imports.

The way in which the D.O.I. forecast is structured lends itself to the above approach. This is because the forecast deals in terms of "supplemental supplies," that "may be from imports, shale oil, coal liquefaction, etc." Thus, all that is needed is to redefine "supplemental supplies" to exclude imports and to throw the whole burden on "shale oil, coal liquefaction, etc." for the purposes of this study.

Two pages from D.O.I.'s forecast are reproduced here as Tables 1 and 2*. The text on the first page is straightforward. However, the present study and other work sponsored by the EPA and Department of Transportation shows that definition of research needs and actual research is in progress. This means that the D.O.I. forecast provides a base case and departure points for the present study.

Table 2 (i.e., D.O.I.'s Table 14) lists two items that will be excluded from this study. The first, natural gas, refers primarily to the gas consumed by pipelines for the transportation of the gas itself. This, of course, is not a component of automotive fuel demand. The second item, utility electricity, refers to the electricity consumed by rapid transit systems which, in the trend-projected base case, is at a negligible level. However, the present study does consider the electricity that may be required to produce "new" fuels such as hydrogen.

---

* Also identified as Table 14, which is its number in D.O.I.'s report.

APPENDIX 2

TABLE 1

THE TRANSPORTATION SECTOR FORECAST

The forecast for the transportation sector is shown in table 14, Demand for energy inputs to the transportation sector; 1971 actual, and projections to the year 2000. As shown, total sector energy inputs are expected to increase from 16,989 trillion Btu in 1971 to 42,660 trillion Btu in 2000 for an average annual growth rate of 3.2 percent over the entire period.

Little significant shift in energy inputs is expected. Petroleum's share of this market will show a slight decline from 95 percent in 1971 to 93.8 percent in 2000 while natural gas will increase its share from 4.9 percent to 6.1 percent. Utility electricity is expected to retain approximately .1 percent of the market over the entire period.

The major implication of this forecast is that energy consumption in the transportation sector is expected to continue much as it has in the past. This is particularly true through 1985, for we are locked into our present systems of transportation within that time period. The long lead time required to phase in new transportation equipment precludes any radical shifts in transportation systems.

While major changes can occur after 1985 there is little evidence to indicate that the research to accomplish these major changes is being undertaken. For this time period it is necessary to consider not only the time lag associated with phasing in new equipment but also the time lag associated with the research and development of the new equipment. This does not mean that changes cannot occur. It only means that, barring a major national effort, the changes will be only evolutionary and will not have significant effects in the present century.

In preparing the forecast considerable attention was given to the problem of additional energy consumption due to environmental regulations. For automobiles little doubt exists that the regulations will reduce efficiency of utilization. Offsetting this loss of efficiency will be the movement toward a larger percent of our automobiles being in the compact category. Other factors limiting the rate of growth of energy demand in the automotive section of the sector is the growing saturation rate for automobiles and the declining growth rate of population. For these reasons the environmentally stimulated increase in energy inputs would be partially or wholly offset.

APPENDIX 2

TABLE 2

Table 14. Demand for energy inputs to the Transportation Sector, 1971, actual and projections to the year 2000

	1971 1/	1975	1980	1985	2000
Fossil Fuels					
Petroleum					
Millions of barrels	3,004.9	3,360	3,992	4,739	7,450
Trillions of Btu	16,139	18,050	21,440	25,450	40,010
Percent of total 2/	95.0	94.6	93.8	93.8	93.8
Natural Gas					
Billions of Cubic feet	800	989	1,358	1,591	2,522
Trillions of Btu	825	1,020	1,400	1,640	2,600
Percent of total 2/	4.9	5.3	6.1	6.1	6.1
Total Fossil Fuels					
Trillions of Btu 3/	16,971	19,070	22,840	27,090	42,610
Percent of total 2/	99.9	99.9	99.9	99.9	99.9
Utility Electricity					
Billions of Kwhrs	5.34	6	9	11	15
Trillions of Btu	18	20	30	40	50
Percent of total 2/	.1	.1	.1	.1	.1
Total Energy Inputs					
Trillions of Btu 3/	16,989	19,090	22,870	27,130	42,660

1/ Actual data
2/ Refers to percentage of total energy inputs to sector.
3/ Includes coal: 7 trillion Btu.

Consideration was given to the shifting nature of our transportation system. Evidence indicates a shift from the less energy intensive modes (i.e. railroads and barges) to the more energy intensive modes (such as airlines). This was factored into the forecast.

The footnote to Table 2 raises a question of considerable importance, namely the extent to which shifts in the transportation section will be in the direction of greater energy-intensity.

D.O.T. Report on Improved Transportation Energy Usage

In the Department of Transportation's report, the base case involves "U.S. demand for oil in the period 1970-2020 as extrapolated from present trends without any adjustment for greater efficiency of utilization of transportation and fuel." For example, the projections for the year 1990 are that transportation will continue to require 25% of total energy demand, and that the transportation sector will require 246 billion gallons in that year. This figure is identical with D.O.I.'s projections. This is not surprising since both sets of projections were obtained by trend extrapolation from the same data base. However, the linkage between the D.O.T. base case and the D.O.I. forecast is helpful in that it places the former in a broad energy context. For 1990, the base case (i.e., projection of continuing trends) gave the following breakdown of fuel demand by transportation mode:

	%	10^9 Gallons	MM B/D
Highway	65	160	10.4
Aviation	26	64	4.2
Marine	5-6	13.5	0.85
Other (Pipeline, etc.)	3-4	8.5	0.55
	100	246	16.0

Of the above, only the highway transportation mode is directly pertinent to the present automotive fuels study. However, the other modes, particularly aviation, are indirectly pertinent because they compete for the same resources. Also, if it is conceptualized that conventional supplies may become limited it also becomes important to consider whether "new" fuels will enter highway use, or aviation, or both, and what the relative timing of such events may be.

The D.O.T. study finds that "technological improvements and changes have the potential to significantly reduce the projected energy demand of the Nation's transportation system on petroleum within the next 15 years, and to permit the use of non-petroleum-based energy sources by the end of the century." This establishes the D.O.T. panel's time-frame for "new" fuels. Additional thoughts of this kind are:

- "Battery technology is currently inadequate...15 to 20 years are estimated as necessary before electric propulsion could reach the stage of large scale implementation."

- "...benefits of fuel technology could be realized gradually, but not fully, before 1985."

- "...for new engines and new fuels, the full realization of benefits could not be reached before 1990 to 2000."

The long lead-times required for significant changes to occur suggest that a likely scenario for 1990 could approximate the trend-projections cited above. However, the D.O.T. study also extends the trend-projections another thirty years to 2020. The validity of such extrapolation is questionable, even to produce a "base case", since there are many reasons for believing that changes will occur during the next 45-50 years and no reason to believe that current trends will remain unchanged during this time period. Nevertheless, the D.O.T. panel's "simple projections" for the year 2020 are that:

(a) Highway vehicles will account for most of the energy used by surface transportation.

(b) Aviation will use as much energy as automobiles.

A corollary is that transportation by water, railroad and pipeline will be relatively insignificant. However, the economic implications of this corollary were not examined. For example, what part of the economy is generating the production that can support the consumption implied by the highway/aviation demand? What is the transportation demand associated with the production and distribution of goods, and is it possible for this component of total demand to be insignificant in relation to personal transportation? Moreover, much of the present demand for automotive fuels is attributable to local trips and commuting by automobile. It hardly seems possible that these components of demand would shift to an aviation mode.

There is another problem with the extrapolative assumptions. Economic growth (in terms of GNP, Disposable Personal Income, etc.) cannot occur independently of its energy base. It is incorrect to assume that energy consumption will increase because GNP and DPI will increase. It is better to reason that increases in GNP and DPI will <u>depend</u> on the way in which the Nation deals with energy supply and consumption.

The point may be put in another way. Past trends in energy supply and demand are responsible for increasing difficulties. Hence, a projection that the trends in supply/demand will continue is also a projection that the associated difficulties will continue to increase. As the difficulties are already at a serious level, it is not possible for the trends to continue much longer without difficulty turning into crisis. At this point, corrective action would become essential. Thus, it is apparent that past trends are unstable and that long-term extrapolation of these trends is not a reasonable projection of the future.

The transportation industry's share of national income is reported in Table 3. This share remained approximately constant, at 3.1% of GNP, during the 1968/72 period. This segment of national income is accounted for by commercial transportation (airlines, railroads,

APPENDIX 2

TABLE 3

TRANSPORTATION AND THE NATIONAL ECONOMY

		1968	1969	1971	1972
	Gross National Product, $ Billion	865.0	931.4	1050.4	1151.8
	Personal Consumptions Exp., $ Billion	535.8	577.5	644.9	721.0
	PCE as % of GNP	61.9	62.0	63.3	62.6
	PCE By Type				
	Autos and Parts, $ Billion	37.2	40.3	46.7	52.8
	Gasoline and Oil, $ Billion	19.0	21.1	23.5	25.2
	Subtotal, $ Billion	56.2	61.4	70.2	78.0
	Percentage of GNP				
	Autos and Parts, %	4.30	4.33	4.45	4.58
	Gasoline and Oil, %	2.20	2.27	2.24	2.19
(A)	Subtotal, %	6.50	6.60	6.69	6.77
	National Income by Industry Division - Transportation, $ Billion	27.1	29.2	32.5	35.8
(B)	Division - Transportation, % of GNP	3.13	3.14	3.09	3.11
	(A) + (B), % of GNP	9.63	9.74	9.78	9.88

Source: "Survey of Current Business," U.S. Dept. of Commerce; various issues.

buses, barges, etc.). Implicitly, it includes the cost of equipment and fuels through the prices charged for transportation services. When added to personal automobile expenditures (including parts, fuels and lubes), the total of close to 10% of GNP will approximate the transportation sector's total contribution to GNP. This figure appears to be greatly at variance with the 20% figure cited in the D.O.T. study.

A small part of the discrepancy may be due to the contribution to GNP made by transportation exports (excluded from Table 3), particularly of commercial and military aircraft. In 1972, exports of U.S. transportation equipment accounted for 0.7% of GNP including about 0.3% for aircraft. Additionally, in the unlikely event that all automotive equipment imports were to be supplanted by domestic equipment, there would be an increment to the transportation segment of GNP of about 0.8%. However, the major part of the discrepancy must have another explanation.

The above discussion may be rephrased in terms of several hypotheses:

(a) GNP cannot continue to grow at recent trend rates without correction of the balance between consumption and production expenditures (investments).

(b) Unless a correction occurs, the trend rate in GNP <u>growth</u> will decline. This will affect all factors, e.g., transportation fuel demand, that are correlated with GNP and projected from forecasts of GNP.

(c) It is questionable whether "total U.S. transportation expenditures will continue at 20% of GNP", as postulated by D.O.T. (or are at this level now).

If a higher % of GNP is to be applied to production <u>investments</u>, then a lower % will be available for consumption <u>expenditures</u>. Hence, discretionary transportation expenditures might fall as a % of GNP. Alternatively, as in (b), the transportation % might remain constant but the secular trend in GNP growth would fall. In either case, transportation fuel demand would follow a slower growth pattern than that obtained by extrapolation of recent trends.

The second paragraph on page 21 of D.O.T.'s study says: "while the transport efficiency of the family car is about half that of the transit but, the small car has a transport efficiency which is nearly comparable." This is an exceedingly important point because there is undoubtedly a preference for travel by car. If fuel consumption is effectively the same, the choice is overpowering. The question is whether D.O.T.'s "small car" is, or can become, a "family car" <u>in the U.S</u>.

The need for change is perceived by the D.O.T. study; indeed, "improved usage" is its goal. Implicitly, the concept of "improved usage" extends beyond fuel usage per se to the Nation's energy and capital resources in total. This leads to a major recommendation:

> "The Transportation Energy Panel recommends that substantial emphasis be given to making transportation synthetic fuels with properties close to petroleum derivatives to permit undisturbed, continued use of the presently planned, petroleum-dependent transportation vehicle industry."

This means that, at any given time, the needs of the existing vehicle population must be met. Hence, to the extent that this vehicle population requires conventional-type fuels, such must be produced, regardless of the resources used to produce them.

Summarized, D.O.T.'s projections of transportation energy demand for petroleum or petroleum-type fuels were:

	% of Transportation Energy Demand				
	1969	1977	1985	2000	2020
Automobiles	47	46	40	38	36
Aircraft	14	24	35	37	35
	61	70	75	75	71
Truck	23	22	18	17	16
Bus, rail, ship	11	8	7	8	11
	95	100	100	100	98
Total usage, 10^{15} BTU	14.91	21.54	29.97	38.48	48.36

It is not clear why the percentages for 1969 do not add to 100. Corresponding D.O.I. statistics for 1969 show 15.13 x 10^{15} BTU for petroleum*. Overall, the discrepancy is minor. However, other information tends to confirm the percentages for aircraft, trucks, and bus/rail/ships, and to suggest that automobiles accounted for half of the transportation sector's total petroleum demand in 1969.

Of much greater concern is the projection that aircraft demand may grow so rapidly as to approximately equal automobile demand by about 1990. Considering the long life of commercial aircraft and the importance of common international fuel specifications for aviation fuels, there would seem to be no opportunity for diverting any significant segment of aviation fuel demand away from currently used types of fuel by 1990.** In effect, this places aircraft demand in competition for

---

* And also 0.68 x 10^{15} BTU for natural gas, coal, and purchased utility electricity. Most of the natural gas was consumed by gas pipelines.

** This does not preclude the possibility that current types of aviation fuel may be producible from shale oil or other non-petroleum sources.

essentially the same distillate fraction of the "petroleum barrel" used not only by buses, trucks, etc., but also under consideration for use by "new" automotive power plants. Lightweight diesels, automotive gas turbines, and Rankine cycle or Sterling engines could all operate on distillate fuel. The use of other fuels is possible, but may be neither the most economic choice nor the fuel used for the engine development.

The growth of aviation fuel demand projected on page 72 of D.O.T.'s study is seen as a possibly serious constraint to:

(a) achieving overall adequacy of automotive fuel supplies.

(b) following the most economical path to the development of more efficient ground vehicles.

On the other hand, there are reasons for believing that the projections of aircraft demand are seriously in error. This will be considered further during discussion of the ORNL report.

Note may also be taken of an overall conclusion reached in D.O.T.'s study:

> "Finally all of the fuel diversification measures discussed are of necessity long-term solutions. The technology developments needed, the useful life of most heavy duty vehicles, and the historical cycles for introduction of new vehicles all point to the continued need for conventional kerosene-type fuels through the year 2000, at least. Thus, if reduced dependence on petroleum is deemed desirable, then production of synthetic crude oil from shale or coal is essential."

It is not necessary that synthetic <u>crude oil</u> should be produced. However, it does appear necessary to develop the capability of producing petroleum-type liquids that can augment conventional petroleum supplies in such a way that the overall supply of conventional-type automotive fuels may be significantly increased. This goal might be achieved by:

(a) Having the synthetic fuels substitute for petroleum in non-automotive applications, thereby making a higher % of the petroleum barrel available for automotive use.

(b) Making synthetic fuels directly for automotive use.

(c) Some combination of (a) and (b), including the blending of "synthetics" with conventional petroleum fuels.

The above does not mean that there will not be a need for, or advantage in, entirely "new" types of fuel. Conceptually, however, such

fuels could be developed in parallel with what will be required by a growing population of vehicles that demand conventional fuels.

Oak Ridge Study of
Energy Consumption for Transportation

The ORNL study (5) considers two cases:

(a) current trends persist

(b) shift towards more energy-efficient transportation modes.

The latter case excludes consideration of technological changes. This is unsatisfactory for projections made to the year 2000. The effect of technological change is implicit, but not explicit, in the trend-projection of (a) -- unless it is assumed that no technological changes have occurred in the transportation sector. Both cases assume the same passenger-miles and freight ton-miles.

The demand projections in the Oak Ridge study are based on Bureau of Mines studies published in 1968 and 1971. These studies are antecedents of D.O.I.'s forecast of December 1972 (1). A comparison of the two sets of transportation energy demand projections is given in Table 4. The following explanation is necessary for an understanding of the statistics presented:

- There is a large difference between the total primary energy input and the total of the energy inputs to the final consuming sectors (Industrial, Transportation, Residential/Commercial).

- The main reasons for the difference are the conversion and transmission losses associated with electricity generation and distribution. In round figures, the primary energy input to the electricity sector (which is not a "final consuming sector") is three times as great as the BTU value of the electricity input to the three final consuming sectors.*

- The Bureau of Mines (D.O.I.) keeps separate track of (a) the primary energy (fossil fuel, hydro and nuclear, but not electricity) input to each sector and (b) the total energy (including electricity) input to each of the three final consuming sectors.

---

* Currently, for every 100 BTU's of primary energy input to electricity, about 67.2 are consumed in generation losses and a further 2.9 are consumed in transmission, so that the useful electrical energy delivered is about 29.9 BTU's. Thus, the current ratio is 3.33 to 1.

APPENDIX 2

TABLE 4

COMPARISON OF D.O.I. AND OAK RIDGE PROJECTIONS

Dept. of Interior

Year	Total Primary Energy Input, 10^{15} BTU	Primary Energy Input of Transport. Sector, 10^{15} BTU	% Transportation
1970	67.44	16.34	24.2
1980	96.02	22.84	23.8
2000	191.90	42.61	22.2

	Total Energy Input to Final Consuming Sectors, 10^{15} BTU	Total Energy Input to Transportation Sector, 10^{15} BTU	% Transportation
1970	55.99	16.36	29.2
1980	76.12	22.87	30.0
2000	140.07	42.66	30.5

Oak Ridge

	Total Primary Energy Input, 10^{15} BTU	Total Energy Input to Transp. Sector, 10^{15} BTU	% Transportation
1970	68.81	16.50	24.0
1980	88.08	21.56	24.5
2000	168.60	42.88	25.4

Sources:

(1) "United States Energy through the Year 2000", Dept. of the Interior, Dec. 1972, page 7 and Appendix B Tables 1 and 11.

(2) "Energy Consumption for Transportation in the U.S.", Oak Ridge National Lab., March 1972, page 3, Table I, based on Bureau of Mines' projections published in 1968 and 1971.

EPA-460/3-74-009

- The transportation sector currently obtains 99.9% of its energy in primary form and only 0.1% as purchased electricity. In consequence, the primary energy and total energy inputs of the transportation sector are essentially the same.

- When the energy demand of the transportation sector is expressed as a percentage of total energy demand, there is a significant difference between (a) the % related to total primary energy input and (b) the % related to total energy input to the final consuming sectors.

- These points are of considerable importance in any projections of future demand that apply percentages to total demand.

The top segment of Table 4 reports the statistics on a primary energy input basis. Here, it will be seen that the D.O.I. is projecting that transportation will account for a declining percentage of primary energy input. The middle segment of Table 4 reports the statistics on a final consuming sector basis. Here, it will be seen that transportation is projected to account for an increasing percentage of total energy input to final consuming sectors. It is important to understand that the apparent divergence of trend (declining % versus increasing %) in the transportation sector is due to what is projected to happen in the two other final consuming sectors (industrial, residential/commercial) and not to what is projected for the transportation sector itself. It is the projected increase in electricity use (and, hence, generation and transmission losses) in the industrial/residential/commercial sectors that is causing the superficial anomaly in the transportation sector's percentage figures.

The third segment of Table 4 reports the statistics cited in the ORNL study. Here, the statistics are scrambled such that the total energy input to transportation (a final consuming sector) is related to the primary energy input to the economy.

The absolute quantities of BTU's projected in ORNL and D.O.I. studies are essentially the same, but the associated total primary energy input projections are significantly different. What this means is that when the D.O.I. made its forecast in 1972 it revised the total energy requirements upwards but left the transportation sector unchanged, i.e., all of the increase was in the other two final consuming sectors. Obviously, this had the effect of decreasing the transportation sector's percentage of total energy demand relative to what had been projected in 1971.

The upward revision of total energy demand has important implications. Quantitatively, the projections for the year 2000 were increased from 168.6×10^{15} BTU to 191.9×10^{15} BTU. This increase of 23.3×10^{15} BTU is large in relation to the total demand of the

transportation sector projected for the year 2000, namely, 42.7 x 10^{15} BTU. Over a period of two to three decades, there will be opportunities for fuel shifts (from one type of fuel/energy to another) to occur, particularly in the industrial sector. Hence, a swing in total demand of 23 x 10^{15} BTU's could have a major impact on the availability of (conventional) fuels for the transportation sector.

In its forecast of December 1972, the D.O.I. paid special attention to synthetic fuels. From a statistical viewpoint, there is an analogy with electricity. This is due to the large difference between primary energy input and the energy delivered in useful form. For example, conversion losses are expected to absorb about 30-35% of the primary energy input when coal is converted to synthetic fuels. This is of great practical and statistical importance to studies that involve consideration of the production of synthetic fuels on a large scale. For the same amount of energy deliverable in useful form, there will be a significant difference in the associated primary energy input depending on the extent to which it is supplied: (a) by petroleum imports and (b) by synthetic fuels. For a given amount of useful product, the primary energy input will be higher in case (b). However, the demand of the transportation sector as a percentage of total demand would be lower in case (b).

The factors just discussed are even more important in cases that consider that significant amounts of transportation energy will be supplied as, or derived from electricity. Here, the output energy at best will be about one-third of the primary energy input and could be considerably less if the electricity generated is used in chemical transformations so as to produce a liquid or gaseous transportation fuel. Clearly, for a given quantity of electrically-derived transportation fuel, there would be an increase to total primary energy input. Statistically, this would reduce the percentage of energy input to the transportation sector in relation to total primary energy input.

Reverting to the matter of fuel/energy shifts in the economy, it may be noted that there is a growing possibility of employing nuclear heat in the industrial sector without prior conversion to electricity. This would substantially reduce the primary energy input required, since electricity generation losses would be avoided. From the standpoint of overall efficiency of energy use, one implication is that nuclear energy should be applied in the industrial sector before it is applied to transportation. The underlying concept is that many years will be needed to develop nuclear capability to the point where incremental capability is available on a large scale for purposes other than keeping up with conventional electricity demand.* An elaboration of this thesis is that nuclear process heat may be applicable to synthetic fuels production:

---

* This is discussed further in Appendix 3.

- to substitute nuclear for fossil fuel energy in the conversion processes

- to generate hydrogen needed in synthetic fuels processing (for desulfurization, denitrogenation, and correction of C:H ratio).

The "all nuclear" economy now visualized for the 21st century has been elaborated to include a "Hydrogen-Energy system" (6) for transportation and other purposes.

Six different ways of using hydrogen are foreseen:

(a) in the petrochemical and metallurgical industries

(b) for the production of synthetic fuels

(c) by electric utilities for peak-shaving

(d) as a replacement for natural gas used by industry as a fuel

(e) as a replacement for natural gas used domestically

(f) as a transportation fuel.

The above applications fit different time-frames. The first is happening now. The second will occur soon. The third is in the planning stage by electric utilities, and may occur soon. The other three items are more distant prospects. The first three items promise to be important in the 1985-2000 time frame and may contribute both to augmentation of energy supplies and to more efficient energy usage. No further comment will be made here concerning the second three items, except that they depend commercially on <u>greatly</u> increased nuclear capability.

The substantial digression from ORNL's study has been necessary to show the relationships of transportation energy forecasts to projections of total energy demand and also the importance of understanding the statistical basis of such projections. Some specifics of the study may be discussed now that major statistical difficulties have been explained.

The ORNL study projects trends in inter-city <u>freight</u> traffic by transportation mode. The figures in parentheses are for "shift to greater energy-efficiency", in contrast with continuation of current trends:

	Percent of Ton-Miles				
	R.R.	Trucks	Waterways	Pipelines	Airways
1970	40.1	21.4	15.9	22.4	0.18
1980	37 (41)	21 (18)	16 (16)	25 (25)	0.4 (0.2)
1990	35 (42)	21 (14)	15 (16)	28 (28)	0.7 (0.1)
2000	34 (44)	21 (11)	15 (16)	29 (29)	1.0 (0.1)

Energy consumption by pipelines should be separated from other components of transportation energy demand when long range projections are made. Conceptually, the transportation of fossil fuel energy by pipeline is analogous to the transmission of electrical energy by cable. It is preferable to separate the transportation of energy from other types of transportation.

ORNL also provides projections of inter-city passenger traffic. It is reported that air travel accounted for 2% of such traffic in 1950 and grew to 9.7% in 1970. With "current trends", it is projected that a level of 17% would be reached in the year 2000, but that with a shift to "greater efficiency", the fraction would drop back to 2%. Similar projections are made for urban travel. With inter-city and urban travel combined, air travel in the year 2000 would account for 9.4% and 1.1% of total passenger miles in the two cases examined.

Projections for automobile passenger-miles are that urban trips will account for 49.1% in the year 2000 if current trends continue. With greater efficiency, the figure would be 45.7%. The difference between these cases is small, and it might be inferred that urban driving will account for almost half of the automobile passenger-miles whether efficiency improves or not. However, this need not be the case if mass transportation systems are developed.

The report says, "mass transit typically accounts for about 5% of total urban passenger traffic...we consider only automobiles and buses, since other forms of mass transit account for a very small fraction of total urban passenger traffic". This is true now, and the physical situation cannot change quickly. Nevertheless, changes in attitude may be occurring with respect to the uses to which the Highway Trust Fund may be put, especially after the interstate highway system is completed. Thus, the situation towards the end of the 1985-2000 time-frame could be appreciably different from what it is today.

Some of the statistics quoted in the ORNL study are at variance with those reported elsewhere. Hence, pertinent statistics from Department of Commerce publications will be reviewed. The top part of Table 5 is concerned with passenger-miles by different transportation modes. The lower half summarizes similar data for cargo ton-miles.

APPENDIX 2

TABLE 5

TRANSPORTATION STATISTICS

Passenger-Miles or Revenue-Miles (Public Carriers) x 10^9

	1963	1967	1969	1970	1971	1972	1980E	Growth Rate, %/Yr. 63/69	69/72	72/80
Scheduled Airlines	38.5	98.7	125.4	131.7	135.6	152.4	275.2	22	6.7	7.7
Railroads	18.5	15.2	12.2	10.9	8.9	8.8	10.3	Neg.	Neg.	2.0
Bus	21.9	24.9	24.9	25.3	26.0	27.0	35.0	2.2	2.7	3.3
Automobiles	765.9	889.8	977.0	1026.0	1056.0	1087.0	1294.0	4.1	3.6	2.2
Total	844.8	1028.6	1139.5	1193.9	1226.5	1275.2	1614.5	5.1	3.8	3.0
% Air	4.6	9.6	11.0	11.0	11.1	12.0	17.0			
Air Load-Factor			50.0		48.5	53.0				

Cargo Ton-Miles x 10^9

Scheduled Airlines	1.0	3.4	4.7	5.0	5.1	5.5	11.1	29	5.4	9.1
Railroads	622	719	774	771	746	763	967	3.7	Neg.	3.0
Inland Waterways	234	274	303	318	307	316	401	4.4	1.4	3.0
Motor Freight	336	388	404	412	430	450	537	3.1	3.7	2.2
Sub-Total	1193	1384	1486	1506	1488	1535	1916	3.7	1.1	2.8
% Air	0.08	0.25	0.32	0.33	0.34	0.36	0.58			
Pipelines	253	361	411	431	444	462	614	8.4	4.0	3.6
Total (Incl. Pipelines)	1446	1745	1897	1937	1932	1997	2530	4.6	1.8	3.0
% Pipelines	17.5	20.7	21.7	22.3	23.0	23.1	24.3			
• Constant $ GNP	551.0		725.6			789.5		4.7	2.9	?

Sources: "Survey of Current Business", pages S-23/24, Bureau of Economic Analysis, Dept. of Commerce

"U.S. Industrial Outlook with Projections to 1980", 1971-2-3 Editions, Bureau of Competitive Assessment and Business Policy, Dept. of Commerce.

EPA-460/3-74-009

The years chosen permit a comparison between trends that occurred: (a) in a period of rapid economic expansion from 1963 to 1969, and (b) during the recesion of 1969 to 1972. While many other factors may have been involved, there are qualitative correlations between constant dollar GNP, total passenger-miles, and cargo ton-miles:

	Growth Rate, %/Year		
	1963/69	1969/72	1963/72
Constant dollar GNP	4.7	2.9	4.1
Passenger-miles	5.1	3.8	4.7
Cargo ton-miles, excluding pipelines	3.7	1.1	2.8
Cargo ton-miles, including pipelines	4.6	1.8	3.7
Passenger-miles plus cargo ton-miles	4.8	2.5	4.0

There is no "scientific" or rigorous basis for adding passenger and cargo miles. Yet, when this is done, the hybrid statistic closely tracked constant dollar GNP.

Notable in Table 5 is the pronounced decline in growth rate for both passenger-miles and cargo ton-miles by air during 1969/72 relative to 1963/69. This makes trend-extrapolation extremely difficult. The problem, as it relates to fuel demand, is mainly with projection of air travel, since air cargo is at a low absolute level and as a percentage of other cargo transportation modes. Air travel itself may be divided into business and recreational components. As a hypothesis, it is suggested that advanced telecommunications systems may eventually reduce the need for business travel. This would have a major impact on the airlines, because business travel tends to smooth the seasonal and holiday peaks of recreational travel, and price charged for the latter would have to increase significantly. Current trends may once again be in the direction projected by the Department of Commerce for 1980 (7), but the long range prospects are hard to gauge. The aggregate effects of recent problems with air travel suggest:

(a) a lower increase in passenger-miles than was predicted in 1969

(b) emphasis on how to increase load factors

(c) de-emphasis of further increases in air speed

(d) more moderate increases in total fuel consumption as a result of (a), (b), and (c).

In the past, the fuel consumed by military aircraft has been a large fraction of total aviation fuel consumption in the U.S. (8):

	Aviation Fuel Consumption in 1968	
	Million Barrels	%
Civil aviation	217.79	57.3
Military	162.36	42.7

In 1960, military consumption of aviation fuels accounted for 68.7% of total domestic consumption. By 1970, the fraction had fallen to 33.5%. The way in which military consumption has been factored into trend extrapolations of future aviation fuel demand is not clear in the forecasts reviewed. Certainly, military consumption is included in the historical statistics reported by the Bureau of Mines and the transportation totals projected by the D.O.I.

The impact of military procurement is primarily on aviation fuels (9):

	Military Procurement in 1969*	
	Million Bbls.	%
Aviation fuels	268.4	60.8
Motor gasoline	21.4	5.0
Diesel, distillate, kerosene	45.2	9.8
Fuel oils and other products	107.6	24.4
	441.1	100

In total, it is judged that the future civil and military requirements for aviation fuels may be much lower than projected in the studies reviewed--and will not approach a level of demand equal to that created by automobiles. The plausibility of this judgment may be examined quantitatively using figures quoted for the years 1969 and 1985 on page 72 of D.O.T.'s study:

	1969	1985
Total transportation energy, 10^{15} BTU	14.91	29.97
Aircraft, % of total	14	35
Aircraft, 10^{15} BTU	2.087	10.49

In 1969, military aviation accounted for 35.9% of domestic consumption. A simple projection of the declining percentage of military demand from the 1960/1970 statistics results in zero military usage by 1980. This projection is implausible, and a figure of 10% will be used for illustrative purposes:

---

* The statistics include fuels procured outside the U.S. for overseas operations.

	1969	1985
Total aviation demand, 10^{15} BTU	2.087	10.49
Military demand, %	35.9	10
Military demand, 10^{15} BTU	0.749	1.05
Civil demand, 10^{15} BTU	1.338	9.44
Annual growth rates, %/yr.		
Military demand	2.1	
Civil demand	13	

A principal source of statistics for aviation fuel demand is the "Annual Petroleum Statement" published by the Bureau of Mines. It should be noted that the reporting basis has changed over the years, and that it may lead to difficulties or errors in extrapolation of future demand from the reported historical data.*

The calculated growth rates in the above table are implausible both for military demand (which peaked on a volume basis in 1968, i.e., is now declining on a volumetric basis) and for civil aviation demand that, prior to the Arab oil embargo, was growing at an annual rate of about 7%.

A further calculation may be made to investigate the effect on growth of civil aviation fuel demand of a different assumption concerning total aviation fuel demand. The assumption that military demand will be 10% of total demand is retained.

Total demand assumed to grow at 5%/yr. from 1969 to 1985	
Total demand in 1985, 10^{15} BTU	4.56
Military demand in 1985, 10^{15} BTU	0.46
Civil demand in 1985, 10^{15} BTU	4.10
Military demand, annual growth, %/yr.	-3.1
Civil demand, annual growth, %/yr.	7.3

The result is plausible. Military demand has been declining by more than 10%/yr. since 1968, although this decline rate may taper off appreciably. A demand for civil aviation fuel with annual increases compounded at 7.3% implies a sustained growth of air travel at rates just above those experienced recently. If anything, this projection appears to be on the high side.

---

* For example, "kerosene" included commercial jet fuel beginning in 1960. Starting in 1965, "kerosene" includes kerosene-type jet fuel. However, "jet fuel" included military jet fuel beginning in 1960. From 1965, this inclusion was restricted to naphtha-type jet fuel. Prior to 1964, "motor gasoline" included aviation gasoline. The latter has been reported separately since 1964.

The aviation fuel demand projection of 4.56×10^{15} BTU above amounts to 15% of the total transportation fuel demand projected for 1985 in the D.O.I. study. However, if total demand is adjusted downwardly for lower aviation fuel demand*, the latter would represent 19% of the adjusted total. This compares with the value of 35% projected in D.O.T.'s study. The difference is large, of major consequence to the future availability of automotive fuels, and requires further study.

A footnote on page 4 of the ORNL study says, "Rice's energy-efficiency estimates for aircraft are apparently too low by 30-50%. His values are adjusted upward in Tables 3 and 5 so that the total aircraft energy consumption agrees with the FAA data given in ref. 16" (10,11). Much of the ORNL study is based on direct use of Rice's data. Hence, the resolution of 30-50% discrepancies would seem important.

There is a tabulation in the ORNL report that compares the study's computations of transportation energy requirements, if trends continue, with the historical statistics and projections published by the Bureau of Mines:

Year	ORNL, 10^{15} BTU	B. of M., 10^{15} BTU	% Difference
1950	4.83	8.72	44.6
1960	7.50	10.88	31.1
1970	12.31	16.50	25.4
1980	17.96	21.56	16.7
2000	30.02	42.88	30.0

Several reasons are given for ORNL estimates being lower than the Bureau of Mines statistics. Elements excluded from ORNL's estimates were:

- urban freight traffic
- personal, agricultural, and service use of trucks
- non-bus urban passenger traffic (excluding private cars)
- private boating and passenger traffic carried by boats
- general (i.e., private) aviation

---

* Correction is $(10.49-4.56) \times 10^{15}$ BTU $= 5.93 \times 10^{15}$ BTU

Adjustment to total: $(29.97-5.93) \times 10^{15}$ BTU $= 24.04 \times 10^{15}$ BTU

Adjusted aviation fuel demand $= 4.56 \times 10^{15}$ BTU (A)

Adjusted transportation fuel demand $= 24.04 \times 10^{15}$ BTU (B)

(A) as % of (B) = 19.

It has been suggested (12) that aggregation across sectors may be responsible for the lack of visible, systematic, linear variations between the ORNL and B. of M. statistics, and that it may be important to dig below the surface to uncover the factors responsible for the fluctuating differences between the two sets of transportation energy statistics.

The ORNL study also discusses the total energy consumption attributable to automobiles in terms of the energy equivalents of:

- gasoline consumption
- petroleum refining (to produce the gasoline)
- automobile manufacturing
- retail sales of automobiles
- repairs, maintenance, insurance, replacement parts, accessories, parking, tolls, taxes, etc.

The table implies that the efficiency of automobile usage improved slightly between 1960 and 1970, while efficiency of gasoline usage declined:

	1960	1970
Total energy required (BTU/mile)	19,270	18,600
Gasoline energy required (BTU/mile)	9,524	9,933

The imputed energy requirements were estimated to have been:

	BTU/mile	
	1960	1970
Petroleum refining	1,956	2,042
Automobile manufacture	1,327	788
Retail sales	1,310	910
Repairs, etc.	5,153	4,928
	9.746	8,668

The estimated increase in energy consumption due to petroleum refining is inconsistent with the fact that refinery fuel consumption relative to the energy content of the petroleum processed decreased from 12.3% in 1960 to 11.5% in 1970.

The energy used to manufacture automobiles will have been affected by car imports (which require no expenditure of manufacturing energy in the U.S.). However, this would not account for a 40% reduction, i.e., (1327-788) x 100 ÷ 1327. There is no obvious reason why retail sales of automobiles should have become 30% more energy-efficient.

The final item for repairs, etc. is seriously in error. It was estimated from BTU per dollar of GNP and the percentage of GNP represented by automobile maintenance, etc. The latter is primarily a service activity of low energy-intensity. The error is significant because, in ORNL's estimates, it accounts for 20% of the "total energy required" for automobiles in 1970.

Thus, for 1970, the energy demand imputed to petroleum refining and auto repairs, etc. has been overestimated, while the imputed demand for automobile manufacturing and retailing may have been underestimated. The first two factors outweigh the others quantitatively. ORNL estimated fuel consumption and the imputed energy demands to have approximately equal weight. However, it is judged that a more probable ratio is about 2:1. The difference is important because gasoline consumption is affected by the efficiency of the vehicle that uses it while the other factors are not.

APPENDIX 2

REFERENCES

(1) Dupree, W. O. and West, J. A., "U.S. Energy through the Year 2000," U.S. Dept. of Interior (1972).

(2) "Energy Scenarios - Supply Considerations," Submitted by Esso Res. and Eng. Co. to Tech. Analysis and Evaluation Section, Engin. Analysis Branch, Control Systems Laboratory, EPA, Research Triangle Park, N. Car. (1973).

(3) "U.S. Energy Outlook," National Petroleum Council, Washington, D.C. (1972).

(4) "Research and Development Opportunities for Improved Transportation Energy Usage," summary technical report of the Transportation Energy R&D Goals Panel, Report No. DOT-TSC-OST-73-14, September, 1972.

(5) "Energy Consumption for Transportation in the U.S.," Eric Hirst, Oak Ridge National Laboratory, Report No. ORNL-NSF-EP-15, March 1972.

(6) "A Hydrogen-Energy System," study by Institute of Gas Technology for the American Gas Association, August 1972.

(7) "U.S. Industrial Outlook with Projections to 1980," 1971-2-3 editions, Bureau of Competitive Assessment and Business Policy, Dept. of Commerce.

(8) 1971 Edition of A.P.I.'s "Petroleum Facts and Figures," page 427.

(9) ibid, page 436.

(10) "System Energy as a Factor in Considering Future Transportation," R. A. Rice, A.S.T.M., December 1970.

(11) "Statistical Handbook of Aviation," F.A.A., 1970.

(12) Private communication of 5/28/74 from G. Hinkle, Environmental Protection Agency.

APPENDIX 3

RESOURCE BASE INFORMATION

This appendix is divided into two sections. Part 1 explains the terminology applied to "resources" and "reserves". The definitions are quite complicated and are not uniform for different types of resources. These differences are discussed as a prelude to a quantitative interpretation of the principal domestic energy resources in Part 2.

Part 1

U.S.G.S. Definitions - General Principles

Estimates compiled by specialists of the U.S. Geological Survey are generally based on projections of favorable rocks and on anticipated frequency of the energy resource in the favorable rocks. According to the U.S.G.S. (1), the accuracy of the estimates "probably ranges from 20 to 50 percent for identified-recoverable resources to about an order of magnitude for undiscovered-submarginal resources". Additional points from U.S.G.S. Circular 650 state that:

(1) "Resources...include all rocks and minerals (including their contained heat for geothermal sources) potentially usable by man, including currently known and recoverable reserves, undiscovered resources which are estimated geologically or mathematically and which would be recoverable if found, and energy sources (identified and undiscovered) whose exploitation will require more favorable economic or technologic conditions than those of the present".

(2) Mineral resources may be represented by the conceptual diagram:

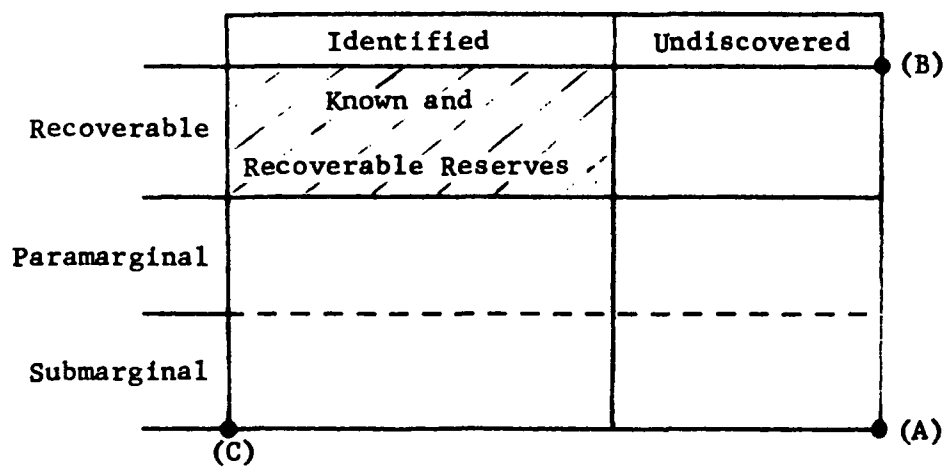

The feasibility of economic recovery increases in the direction of (A) to (B), while the degree of certainty concerning the existence of the resource increases from (A) to (C).

(3) The above diagram is due to McKelvey (2) who defined paramarginal resources as "recoverable at prices as much as 1.5 times those prevailing now".

Recent changes in energy prices must have converted some paramarginal resources into recoverable reserves. However, there has not yet been time for this economic effect to be recognized in published estimates of reserves. Although the concept of distinguishing among recoverable, paramarginal, and submarginal resources is very useful for reviewing the current situation at any given time, it presents difficulties when applied to long range projections. The problem arises because we do not know what price will prevail in the future, hence, we do not know where to draw the line between recoverable reserves and paramarginal resources. In many cases, legal barriers to resource utilization add another dimension to the difficulty of estimating how much of a resource is, or will be, recoverable.

The resource base and the definition of terms that relate to it are discussed in "Energy Research and Development - Problems and Prospects" (3). It is pointed out that "different terms have been used to classify the various kinds of resources for each of the fuels so that it has been difficult to make comparisons among them", and also that the Geological Survey definitions eliminate much of the difficulty. The definition of identified recoverable resources has a number of important qualifications:

> "Identified recoverable resources are the amounts of the resource that can be extracted commercially at current prices and with current technology. Enough detailed geologic information must be available so the quantity of the fuel and its geologic setting are sufficiently well known so that there is a high degree of certainty that it will meet the general parameters that are used to class a given fuel in this resource category. The amount of detailed geologic information that permits different fuels to be classed in the identified recoverable category varies for each fuel, and to use the reported values intelligently requires a thorough understanding of the limitations imposed by the definitions*. The amount of any resource in a given category changes over time. As prices rise, as more efficient technology for extraction is developed, or other factors change...."

---

* Put more bluntly: anyone can add numbers together, but it takes more than arithmetic to know what the numbers mean and whether they should have been added in the first place.

U.S.G.S. Definition of Coal Resources

(1) Identified coal resources include coal beds that have been mapped, with tonnage estimates made on the basis of thickness and general quality. Recoverable coal within this category is defined in terms of seam thickness as:

(a) at least 3-1/2 feet for bituminous coal and anthracite

(b) at least 10 feet for sub-bituminous coal and lignite

(c) 28 inches to 3-1/2 feet for bituminous coal and anthracite

(d) 5 feet to 10 feet for sub-bituminous coal and lignite.

At a recovery factor of 50%, the U.S.G.S. estimates the identified, recoverable coal reserves within 1000 ft. of the surface to be:

(a) + (b) = 200 billion ST

(c) + (d) = 190 billion ST

(2) Identified submarginal coal resources include "the thicker coal left in the ground on first mining and thinner coal beds to a cutoff at 14 inches for bituminous coal and anthracite and 30 inches for sub-bituminous coal and lignite...to a depth of 6000 ft.". These submarginal resources have been estimated at 1.2 trillion tons. No estimated recovery factor has been assigned to these resources.

(3) "Undiscovered coal resources include deposits that have not been mapped or sampled within the known coal fields. The estimates are based on expected volumes of favorable rocks and expected coal frequency within these rocks in unmapped or unexplored areas and in basinward projections from the outcrop". To a depth of 3000 ft., and without applying a recovery factor, the U.S.G.S. places the undiscovered coal resources at 1.3 trillion tons, with a further 340 billion tons at depths between 3000 ft. and 6000 ft.

U.S.G.S. Estimates of Petroleum Resources

S. P. Schweinfurth of the Geological Survey has compiled a number of McKelvey charts that provide estimates of the petroleum liquids (crude oil plus natural gas liquids) and natural gas resources of the U.S. as of 12/31/70 (1). The resources are quoted in billions of barrels and trillions of cubic feet, respectively. The estimates may be summarized:

Petroleum Liquids (10^9 bbls)		Identified	Undiscovered
(a) Conterminous U.S. plus Alaska, including continental margin to 2,500 m.	Recoverable	52	450
	Submarginal	290	2100
(b) Alaska and related cont. margin (incl. in (a))	Recoverable	11	100
	Submarginal	20	450
(c) Conterminous U.S. plus Alaska, offshore to depth of 2,500 m.	Recoverable	6	200
	Submarginal*	17	550
	Submarginal**	----	700
(d) Conterminous U.S. (excl. Alaska, onshore)	Recoverable	36	230
	Submarginal	220	800
Natural Gas (TCF)			
(a) Total (as above)	Recoverable	290	2100
	Submarginal	170	4000
(b) Alaska (as above)	Recoverable	31	480
	Submarginal	8	860
(c) Offshore Total (as above)	Recoverable	40	850
	Sub. 0-200 m.	14	900
	Sub. 200/2,500 m.	----	1600
(d) Onshore (excl. Alaska) (as above)	Recoverable	220	1000
	Submarginal	150	1500

* Continental shelf, 0-200 m. water depth (0-656 ft.)

** Continental slope, 200-2,500 m. water depth (656-8,200 ft.)

The Geological Survey observes "part of the quantities reported of identified submarginal liquids and gas could become recoverable with an increase in wellhead price or equivalent advances in technology and, therefore, could now be called paramarginal. The data to make such a breakdown meaningful, however are not available".

Reconciliation of Information Reported by U.S.G.S. and Others

The following definitions are used by the American Petroleum Institute (API) and American Gas Association (AGA):

(a) Proved reserves of crude oil are the quantities estimated with reasonable certainty to be recoverable from known reservoirs under existing economic and operating conditions. Proved reserves include what can be produced by fluid injection and other (secondary) recovery

techniques. Also included are quantities of crude oil that may be produced when secondary recovery techniques are applied to reservoirs expected to respond to such techniques.

(b) Original oil-in-place is the estimated number of barrels of crude oil prior to any production. In known reservoirs, it includes past production and nonrecoverable oil as well as what may be recovered in the future.

(c) Proved reserves of NGL and natural gas are similarly defined.

The Geological Survey's approach to undiscovered petroleum resources differs from that used by API and AGA (whose approach will be described later). In outline, the U.S.G.S. approach is:

(a) To extrapolate the results of past drilling to the remaining unexplored but geologically favorable rocks in the U.S.

(b) To limit the estimates to a drilling depth of 20,000 ft. and to an offshore water depth of 2,500 meters (approx. 8,250 ft.).

(c) To estimate natural gas by application of a gas/oil ratio to the estimates of total petroleum resources.

(d) To estimate NGL by application of an NGL/gas ratio to the quantities of gas estimated in (c).

(e) To assume that five-eighths of the resource in the ground will (eventually) be discovered.

The U.S.G.S. also attempts to reconcile its own estimates with API's. The latter recognizes total original oil-in-place (crude oil only), from which may be deducted cumulative production, proved reserves, and indicated additional reserves at the end of a given year. The difference is equivalent to McKelvey's known paramarginal and submarginal resources of crude oil.

The API reports proved reserves of NGL, but does not report cumulative production or total original NGL-in-place. The category "indicated additional reserves of NGL" is not applicable because of the general inapplicability of secondary recovery to natural gas reservoirs.

The AGA reports known quantities of gas reserves at the end of a given year as proved reserves. Cumulative past production is reported, but is a somewhat inexact estimate since natural gas produced in conjunction with crude oil was flared for many years, and there are no accurate records of the extent of this flaring. The AGA does not report total original gas-in-place, and does not consider indicated additional reserves because of the general inapplicability of secondary recovery to gas reservoirs. Primary recovery of gas approximates 80%, whereas primary recovery of crude oil now averages just over 30%.

The Potential Gas Committee (Colorado School of Mines) separates this potential into probable, possible, and speculative "reserves" of natural gas. The NPC has made use of PGC's estimates, but has tended to reduce them to two categories: probable/possible and speculative.

Geologic and mathematical methods are both used for estimating petroleum resources. However, different authors or groups use different variants of these methods. For example, the U.S.G.S. considers a larger area of favorable rocks than the PGC. However, the latter includes potential rocks to drilling depths of 30,000 ft. whereas the U.S.G.S. stops at 20,000 ft. On the other hand, the U.S.G.S. considers offshore water depths to 8,250 ft. while the PGC stops at 1,500 ft.*

Referring to an NPC report published in 1970, the U.S.G.S. observes that:

(a) "NPC used a recovery factor of (only) 30% to estimate proved reserves, even though substantially higher recoveries are likely over the lifetime of production of the reserves."

(b) "Some oil in the probable/possible category can be considered to have been already discovered but not cited as proved reserve at the time the NPC report was prepared. This is oil in undeveloped parts of fields and pools that have been discovered but not drilled out...roughly it might be assumed to be an amount equal to the proved reserves reported by the API."

(c) "The NPC report does not cover all potentially favorable areas..."

In self-appraisal of its own approach the Geological Survey says: "This is, therefore, the only geology-based estimating method that is entirely consistent. This method is not necessarily good, however, in estimating potential resources because not all regions are alike in their geology and petroleum potential. On the other hand, if the method is applied to large enough areas, it is felt that errors will average out, and at least a valuable first approximation will be obtained." Others disagree, as is discussed below.

* It may be noted that a number of offshore drilling rigs are now capable of operation in water depths up to 3,000 ft., and a few rigs now under construction will have even a greater capability.

H. R. Warman's* Views on Future Availability of Oil (4)

Mr. Warman observes "there seems to be such confusion and conflict in public utterances on the nature and significance of oil reserves ..." that it is necessary to explain the bases used for compiling the statistics. He says "the only oil with which we need concern ourselves is that which can be produced and used in commerce within the time under review. This is the meaning applied to the term recoverable reserve...it is appalling how little heed is often given to the relevance of time and cost in the understanding of the concept of recoverable reserves". Additional points are reproduced here since they may add greatly to an understanding of published estimates of oil resources and of why such estimates may differ very appreciably.

(1) The only oil ever likely to be produced is that which has accumulated in the pore spaces of porous and permeable sedimentary rocks. The effective pore space varies between 5% and 35% of total rock volume. The oil content of the pore space of a reservoir capable of producing oil varies between 35% and 90%, and below 60% of oil saturation in the reservoir will produce mainly water. The remainder of the pore space is filled with water and gas.

(2) After discovery of an oil field and drilling of a few wells it is possible to make approximate estimates of the total volume of the reservoir and of the oil-in-place. From the collective experience of producing many thousands of oil fields over more than 100 years, it is possible to estimate how much oil will be recoverable.

(3) Sources of error in estimating reserves include:

(a) Ignorance of reservoir behavior. This can be important for an individual reservoir, but not for global estimates.

(b) Misunderstanding and misreporting.

(c) Inability to define the size of fields until they are drilled up.

(d) The "North American factor": "Firstly, companies' declarations of reserves are governed by regulations of the S.E.C. (to safeguard investors) and the IRS (vis-a-vis depreciation allowances). In brief, these regulations stipulate that reserves can only be declared that can be produced by 'existing facilities'. Thus, when a discovery well is drilled into a new field the official 'declared' reserves have historically been limited to what one well can produce or what can be produced from some prescribed area around that well. Thus, as a field has been drilled up

* Chief Geologist, British Petroleum Co., Ltd., and an acknowledged authority in the field.

and as various extra facilities have been installed, including extra recovery systems, the recoverable reserves figures have been increased. In addition, the competitive lease system in America has often put a premium on underquoting new discoveries. Patterns are changing, however, as for example the published figures for the reserves of the Prudhoe field in Alaska where the figures published are those of estimated total yield of recoverable reserves".

(e) A tendency to use minimum figures when estimating the return to be obtained from large capital investment to put a field on production.

(4) It is not possible to produce more than about 50% of the total recoverable oil in a reservoir in less than about 10 years. After this, production will decline exponentially at a rate of about 10% annually. Secondary and tertiary recovery methods may be used to arrest the initial rate of decline but an even sharper decline rate may ensue later. The effective life of an oil field will generally be in the range of 20-30 years.

Mr. Warman's discussion is concerned with world-wide oil resources, and not exclusively with those of the U.S. However, from item (3-d), it may be inferred that U.S. reserves have been conservatively stated in relation to foreign petroleum reserves in general. However, Mr. Warman also discusses the high cost of producing oil in a hostile environment or from under deep water. He argues that only exceptionally large fields with very good reservoir conditions will be economically producible and that this will limit the amount of recoverable reserves from such areas: "Thus, a very large part of the reserves of the U.S. would not under any conceivable climate within the next two or three decades constitute a recoverable reserve in the deeper offshore environment. On these grounds the resource base concept so beloved of some U.S. authors, particularly in the U.S.G.S., who quote reserves per unit volume of sediment from a statistical estimate based on the history of American onshore areas needs very critical analysis..."*

In relation to item (4), an offshore oil field discovered this year might be placed in production in 1977 and might still be producing past the turn of the century. However, only about 3% of U.S. offshore acreage has yet been leased. Hence, the leasing of such acreage may continue for another two decades or longer depending, or course, on the rate at which the leasing occurs. Therefore, petroleum production from this segment of the domestic resource base may continue until the year 2025 or

* Nevertheless, if prevailing price levels continue, there would seem to be good prospects for moving significant quantities of resources into the category of recoverable reserves.

later. The Department of the Interior has been considering an accelerated offshore leasing schedule* such that the present average of two sales per year would be increased to three sales annually through 1978. However, President Nixon's January 23 energy message to Congress recommended a faster schedule.

Part 2

U.S. Coal Resources

Chapter 5 of NPC's "U.S. Energy Outlook" is the basis for the discussion that follows. In general, the statistical information has been taken without significant modification other than rearrangement. However, the interpretation of the data is specifically for the alternative automotive fuels study (which, of course, was not NPC's purpose). Although differing in detail, the statistics are broadly compatible with those of the U.S. Geological Survey estimates. Indeed, the statistical resource base used by the NPC and the U.S.G.S. is essentially the same.

(1) NPC reports the domestic resource base to include 150 billion tons of coal in formations of comparable thickness and depth to those being mined in 1971-72. Of this total, 45 billion tons would be recoverable by surface mining and 105 billion tons by underground mining. However, NPC also observes, "Further mapping and exploration...should result in substantial additions to reserves that can be mined with present-day technology...especially...in the western states where large areas of coal-bearing formations have been only partially explored".

(2) NPC quotes the following U.S.G.S. estimates of the coal resource base that is "unmapped and unexplored":

* The time between the "call for nominations" and the actual lease sale is about one year if the intermediate steps are not delayed. These steps are: (a) "nominations due" (about 2 months after the original call for nominations), (b) "announcement of tracts" (about 2 months later), (c) "draft environmental statement" (2 months later), (d) "public hearing" (1 month later), (e) "final environmental statement" (2 months later), (f) "notice of sale" (1 month later) and, finally, the bonus sale itself in the following month.

State	% Unmapped	Estimate of Unmapped Resources, 10^9 Tons
W. Virginia	Nil	Nil
Pennsylvania	13	10
Ohio	5	2
Indiana	39	22
Illinois	42	100
Wyoming	73	325
N. Dakota	34	180
Montana	41	157
Colorado	64	146
Utah	60	48
New Mexico	31	27

(3) It is important to recognize that a high percentage of the unmapped coal resources in all of the western states except Utah may be recoverable by surface mining. Thus, the potentially strippable coal resources (which appear crucial to the production of synthetic fuels) are much larger than implied by the statistics in items (1) and (4). Also of significance is that most of the unmapped resources are under Federal jurisdiction. In addition, it should be pointed out that the recovery factor with strippable coal is above 80% whereas the NPC and others assume an average recovery factor of only 50% for deep mining (by current technology).

(4) NPC gives the regional breakdown of coal reserves recoverable by surface mining as:

States	10^9 Tons	%
Ky., W. Va., Va., Tenn.	4.2	9
Pa.	0.8	2
Iowa, Ill., Ind., Ohio	5.6	12
Okla., Kans., Mo.	1.6	4
Colo., Mont., N.M., Wyo.	23.8	53
N.D.	2.1	5
Other States	6.9	5
Total	45.0	100

The above are recoverable reserves that have already been identified and mapped.

(5) The comparable breakdown for reserves recoverable by underground mining are:

States	10^9 Tons	%
Pa., W. Va. (excl. 3 counties)	33.5	32
W. Va. (Mercer, McDowell, Wyoming counties)	4.6	4
Ky., Tenn., Va.	12.2	12
Ala.	0.3	<1
Ill., Ind., Ohio	29.7	28
Utah, Colo.	6.7	6
Other States	17.6	17
Total	104.6	100

(6) NPC believes that most synthetic fuels plants will be built in the western states, rather than in the Midwest or Appalachia. After deducting significant quantities of western coals expected to be reserved for direct use by electric utilities, the net (already identified) recoverable reserves in certain western states were estimated to be:

State	Rank of Coal	10^9 Tons	Approx. Number of Syn. Fuels Plants Supportable*	
N.M.	Bituminous	1.7	10	13
Colo.	(23 MM BTU/ST)	0.5	3	
Wyo.	Sub-bituminous	13.0	56	69
Mont.	(17 MM BTU/ST)	2.9	13	
Mont.	Lignite	3.0	10	18
N.D.	(13.5 MM BTU/ST)	1.3	5	
Tex., Ark.		1.0	3	
				100

The quantity of "committed reserves" required for each plant would be:

	Billion Tons		
	Syn. Gas	Syn. Liquids	50:50 Mix**
Bituminous	0.16	0.18	0.17
Sub-bituminous	0.22	0.24	0.23
Lignite	0.27	0.30	0.29

* Syngas: 250 MMCF/D, 67% conversion efficiency, 90% operating factor; coal reserves adequate for 30 years operation at full capacity.
Syn. liquids: 50 MB/D, 72% conversion efficiency, 90% operating factor; coal reserves adequate for 30 years operation at full capacity.

** Used to calculate the number of plants supportable, based on the arbitrary assumption of equal numbers of each type of plant.

(7) The geographical focus of the 100-odd plants estimated to be supportable with identified and recoverable western coal may be summarized:

	Number of Plants*
Wyoming	56
Montana	23
New Mexico	10
N. Dakota	5
Colorado	3
Texas/Arkansas	3

Considering the unmapped resources estimated in item (2) many additional plants may be supportable in all of the above states with the exception of Texas/Arkansas. Although the ultimate potential in New Mexico is not as great as in the other western states, its strippable coal of relatively high rank gives it a compensating advantage. Wyoming appears to have the greatest ultimate potential. However, this state's coal resources may greatly exceed its capability for producing synthetic fuels. Water availability, plant sites, and many other factors are likely to be more limiting than Wyoming's coal resource base.

(8) NPC states that sulfur content data for the coal reserves referred to in item (1) are not available. However, quoting the Bureau of Mines, NPC says that 46% of known coal reserves to a depth of 3000 ft. contain 0.7% or less sulfur, and that 93% of this coal is in states west of the Mississippi River. Other information (4) may be summarized to give a general picture of the average sulfur content of U.S. coal on a state-by-state basis:

State	Av. Wt. % S
Pennsylvania	2.3
W. Virginia	1.5
Virginia	0.9
Illinois	3.5
Indiana	2.8
Ohio	3.4
Kentucky	2.4
Missouri	3.9
Kansas	3.4
Alabama	1.5
Texas	2.3
N. Dakota	0.4
Montana	0.7
Wyoming	0.8
Colorado	0.4
New Mexico	0.7
Utah	1.3

* Based on the arbitrary assumption of equal numbers of 250 MM CF/D syngas and 50 MB/D syn. liquids plants.

(9) Processes used to produce synthetic fuels, whether gases or liquids, will eliminate or substantially reduce sulfur. The disadvantage of high sulfur content may be relatively less in gasification than in liquefaction processes because of the greater ease of sulfur removal from gas streams.

(10) NPC reports that only 11% of the coal reserves east of the Mississippi River have sulfur contents of 0.7% or less. Much of this coal is low volatile or medium volatile, and commands a premium price for metallurgical purposes. In fact, most of this type of coal is produced captively by, or dedicated to, the U.S. and foreign steel industries. Thus, it is questionable whether any synthetic fuels will be produced from low S eastern coals.

U.S. Oil Shale Resources

In 1972, the Geological Survey reported (1) that: "Resources of oil shale are considered submarginal, although the best grade and most accessible deposits would yield oil at a moderate increase in price of oil into the range $4 to $5 per barrel...". Since crude oil prices have risen above this level, it would seem that "submarginal" is no longer applicable to the richer deposits of oil shale.

The following estimates were reported by the Geological Survey (billion barrels):

		Undiscovered Resources	
	Identified Resources	Extension of Known Resources	Undiscovered and Unappraised
Recoverable	Nil	Nil	Nil
Paramarginal	160-600	850	500
Submarginal	1600	2500	20,000

The above figures do not apply directly to the present study because none of the resource is classified as "recoverable", i.e., economically recoverable at the time the estimates were made. However, price increases for conventional crude oil may have converted much of the identified paramarginal resources into the "recoverable" category. The matter may be examined further by review of NPC's findings:

(1) Most of the nation's oil shale resources are underlain by the Green River Formation that extends through parts of Colorado, Utah, and Wyoming. The richest deposits are in the Piceance Basin of Colorado and the Uinta Basin of Utah. Somewhat thinner and generally lower grade deposits are in the Green River Basin and Washakie Basin of Wyoming.

(2) NPC classifies oil shale deposits as follows:

Class	Thickness	Richness (gallons/ton)
1	at least 30 feet	averaging 35
2	at least 30 feet	averaging 30
3	(a) less well-defined (b) less well located	averaging 30
4	poorly defined	15-30

(3) Estimates of resources, based on the above classification, are (billion barrels):

Class	Piceance Basin Colorado	Uinta Basin Utah, Colo.	Wyoming	Total
1	34	---	---	34
2	83	12	---	95
3	167	15	4	186
4	916	294	256	1466
				1781

(4) The shale oil resources in Class 1, and perhaps Class 2 as well, may be regarded as economically recoverable. However, it is questionable whether these resources can be considered as reserves. Only a fraction of the oil shale will be recoverable by current mining methods, and some loss of yield will be experienced in the process that converts the oil that is bound in the shale rock to a synthetic (shale oil) crude. NPC estimates that 54 billion barrels of syn. crude would be recoverable from the Class 1 and 2 deposits in the Piceance and Uinta Basins.

(5) The estimate in item (4) is conservative in some respects but not in others. For example, it is likely that improvements in mining and processing technology will increase the ultimate yield of syn. crude obtainable from the Piceance/Uinta deposits. On the other hand, "reserves" carry the connotation of availability. Approximately 80% of the oil shale deposits are on Federal lands and, hence, are not "available" until leased. For environmental and other reasons*, this is not a limitation that can be changed by a "stroke of the pen". The leasing question is substantially different from that of western coal lands. The richest oil shale deposits, in the Mahogany Zone of the Piceance Basis, are concentrated within an area of about 30 miles by 35 miles. At present there are no reliable estimates of the maximum density of mining and processing that will be tolerable in this small area. Federal leasing, on a large scale, most probably will not take place until the results of a prototype leasing program are known, i.e., not before 1980.

* e.g., disputed mineral rights to much of the acreage.

(6) It appears that, for many years, shale oil will be a resource that is not limited by the oil shale resources but by other resources such as water availability. Thus, it seems impossible to assign any (billion barrel) number to shale oil reserves that will not be misleading if separated from very important qualifications. Shale oil reserves are different in character from petroleum reserves, but measuring both in billions of barrels implies a similarity that invites wrong conclusions to be drawn. One approach to this problem would be to say that the oil shale resource base is enormous but that recoverable reserves of shale oil are currently indeterminate. The size of the reserves that will be recoverable over the next 50 years will depend on the availability of other natural resources and on the technology that is developed to enhance the use of these resources. For example, in situ recovery of shale oil, if feasible, could greatly increase the effective reserves of oil shale by:

(a) Making it economically feasible to produce oil from leaner and deeper deposits.

(b) Extending the area in which shale oil could be produced economically, thereby alleviating the density problem in the Mahogany Zone.

(c) Reducing the amount of water required per barrel of shale oil produced and, by virtue of (b), expanding the area from which water may be drawn (see Section 5.1).

(d) Avoiding or minimizing the environmental problems associated with the disposal of (retorted) spent shale.

U.S. Petroleum Resources

(1) By API definitions, proved reserves of domestic crude oil approximated 35 billion barrels on 1/1/74, including 10 billion barrels estimated for Alaska's North Slope. With the addition of indicated reserves of crude oil and estimated reserves of NGL, the estimated total recoverable reserves of petroleum liquids would approximate 47 billion barrels. This figure is compatible with the 52 billion barrels of identified-recoverable reserves reported by the U.S.G.S. for 12/31/70.

(2) The NPC projections to be cited refer to crude oil, i.e., they exclude NGL. Hence, the estimates of discoverable crude oil should be related to the sum of proved-plus-indicated reserves of about 40 billion barrels on 1/1/74. However, the NPC estimates have a reference date of 1/1/71. At this time, proved-plus-indicated reserves of domestic crude oil totaled about 44 billion barrels.

(3) As of 1/1/71, NPC estimated that about half of the original oil-in-place was yet to be discovered. Thus, the U.S. would have access to its proved and indicated reserves plus whatever could be discovered and converted into recoverable reserves. The estimates that follow refer only to the remaining discoverable oil-in-place. These figures will be significantly greater than the quantitites of oil that can actually be recovered from what may be discovered.

Area	Remaining Discoverable OIP Billion Barrels	% of Original Oil-in-Place
Lower 48 states - onshore	177	32
" " " - offshore	89	87
South Alaska, incl. offshore	23	89
North Slope - onshore	48	67
" " - offshore	48	100
Total	385	48
Onshore subtotal (approx.)	237	37
Offshore " "	148	90

(4) The above estimates show that while more oil may remain to be discovered onshore, it is the offshore areas that are relatively unexplored and, hence, offer the better prospects for discovery of large oil fields. Stated another way, two-thirds of the onshore oil has already been discovered whereas only one-tenth of the offshore oil has been found.

(5) Strictly for illustrative purposes (i.e., not a quantitative prediction or projection), it may be assumed that during the next few decades it would be possible to find about half of the 385 billion barrels still discoverable on 1/1/71 and also that about half of the oil found could be recovered (this assumes significant advances in the technology and application of secondary/tertiary recovery techniques). On this basis, some 96 billion barrels of potentially discoverable oil would become recoverable. This figure may be compared with 44 billion barrels of crude oil reserves as of 1/1/71. Adjusting to 1/1/74, the figures would become 92 and 40 billion barrels, respectively, for a hypothetical total of 132 billion barrels. Including an estimate for NGL would raise the total for conventional petroleum liquids to about 150 billion barrels. If the quantity were to be produced over a span of 50 years, the average annual production rate would be about 3 billion barrels, or 8.2 MMB/D.

(6) Even if oil discovery were to take place as hypothesized in item (5), annual production would not have a flat profile, i.e., 8.2 MMB/D for 50 years. Within the next few years, the current downtrend (from today's level of close to 11 MMB/D of domestic petroleum liquids) would be reversed. Production might peak before the end of the century and would probably be in a steep decline trend a decade later.

The NPC analyzed six cases of domestic crude oil supply. The four cases most commonly referred to are based on the following assumptions:

	Case 1	Case 2	Case 3	Case 4
Finding rate	High	High	Low	Low
Drilling rate	High growth	Medium growth	Medium growth	Current downtrend

Parenthetically, it may be observed that the "current downtrend" of Case 4 has been partially reversed since publication of NPC's study. A medium growth condition exists now, although constrained by shortages of drill-pipe and other oil field equipment. The finding rate in 1973 was higher than in 1972, but the quantity of oil found per "discovery" was less. The current drilling rate is 40% higher than a year ago. Whether "medium growth" will turn into "high growth" would seem to depend on the vector of the large amount of energy legislation now under consideration.

Using the above assumptions, the NPC projected the following wellhead production rates for petroleum liquids from the continental U.S. and Alaska. For Case 4, it was assumed that the Alaska pipeline would not be in operation until 1981. Current production approximates 11 MMB/D (including natural gas liquids) and is declining.

	Case 1	Case 2	Case 3	Case 4
1980 MMB/D	13.6	12.9	11.6	8.9
1985 "	15.5	13.9	11.8	10.4

If the Administration's energy policies are put into effect, the most likely condition in 1985 is intermediate between Cases 1 and 2.

Several inferences may be drawn for automotive fuels:

(1) Conventional petroleum from domestic resources would be adequate to supply the transportation sector with fuels (and the petrochemical industry with feedstocks) for many years if it were possible to shift the demand for all other uses to other energy sources.

(2) The early 1974 level of automotive fuel consumption of approximately 6 MMB/D corresponds to slightly more than half the volume of domestic production of petroleum liquids.

(3) Vigorous efforts to economize in the use of automotive fuels are now in effect*. If corresponding efforts are made to expand petroleum supplies the ratio of automotive fuel demand to domestic petroleum supply may remain at about the current level.

(4) It is not feasible to replace all nontransportation fuel uses of petroleum with other sources of energy, but it should be possible to move in this direction.

(5) Synthetic fuels have the theoretical potential for substituting for petroleum in both transportation and nontransportation uses.

* This was true during the first quarter of 1974.

(6) The national interest may be served best if overall energy usage is optimized*, as distinct from trying to force-fit a given form of energy into a limited number of uses.

(7) Conventional petroleum supplies are likely to be available from domestic resources through the first quarter of the 21st century and, hence, will be potentially available for automotive use during most of this period.

(8) The existing vehicle population requires petroleum (or petroleum-type) fuels. The prospects for supplying it are good provided that the conditions of item (3) are satisfied.

U.S. Natural Gas Resources

On 1/1/71 proved reserves of natural gas totalled 291 trillion cubic feet (TCF), with the North Slope contributing 26 TCF to this total. The estimates that follow refer to the remaining discoverable gas converted to the quantities that would be recoverable.

Area	Remaining Discoverable Gas TCF	% of Original Gas
Lower 48 states - onshore (N)	550	57
" " " - offshore (N)	214	82
Alaska (N)	272	98
(N) = Nonassociated Gas	1036	69
Gas associated with or dissolved in crude oil.	142	40
Total, (N) + assoc./ dissolved	1178	63

The importance of Alaskan and offshore resources of natural gas is very apparent. The Potential Gas Committee (PGC)** estimates that 62% of the above 1178 TCF is in operationally difficult or frontier areas:

(a) 14% is below 15,000 ft. onshore

(b) 20% is offshore

(c) 28% is in Alaska

* In the sense of allowing competition and the marketplace to decide the issue.

** The PGC's estimates are a function of The Potential Gas Agency of The Colorado School of Mines Foundation, Inc.

The estimated total of 1178 TCF is approximately equivalent to 200 billion barrels of crude oil. However, the PGC has already eliminated the recovery factor that has to be applied to crude oil. If the same discovery assumptions were applied to natural gas, then the oil equivalent of the recoverable gas would be 100 billion barrels. Thus, the quantities of domestic crude oil and natural gas that may be recoverable in the future are approximately equal in terms of heat content. The same is true on the basis of currently proved reserves. Which quantity is the larger depends on the way that NGL is treated. Geologically, the gas liquids "belong" to the gas. Statistically, NGL are combined with crude oil to give total petroleum liquids. The approximate parity on the basis of heat content also applies to current production:

Crude oil plus NGL	11 MMB/D oil equivalent
Dry natural gas	10 " " "

The current level of domestic natural gas production is 22 TCF/yr. and has been declining. However, the more optimistic cases considered by NPC envisage an upturn before 1980:

	Case 1	Case 2	Case 3	Case 4
1980 TCF	26.1	24.4	20.5	17.3
1985 "	31.9	27.3	21.2	15.0
1980 MMB/D O.E.	12.2	11.4	9.5	8.1
1985 " "	14.9	12.7	9.9	7.0

NPC's study also notes that nuclear-explosive stimulation of natural gas reservoirs "is regarded as appropriate only in those areas where conventional well completion techniques do not permit commercial operation. Therefore, this technology...could be thought of as increasing the reserve potential". This possible increase has not been considered in the above tabulation.

Natural gas is pertinent to the alternate automotive fuels for three reasons:

(1) Natural gas can substitute for petroleum liquids in most stationary uses of fuel and, hence, impacts on the quantity of liquids available as transportation fuels.

(2) Natural gas is the source of NGL* including natural gasoline.

* By convention, natural gas liquids are included with resources of petroleum liquids (i.e., crude oil plus NGL).

(3) If nuclear energy were to displace natural gas from its electric utility and largest industrial markets, then significant quantities of gas might be available for conversion to methanol (as a potential automotive fuel) or for direct use as automotive LNG.

The time-frame in which item (3) may occur is uncertain, except that it will probably be after 1985.

U.S. Nuclear Energy Resources

Nuclear energy has been utilized commercially almost entirely in the form of electricity. However, ways of using nuclear heat are already under development (5). Nuclear energy itself is not a primary resource since it is obtained from certain fissionable elements that, in turn, are derived from mineral resources. The mining methods and all of the subsequent steps combine to greatly affect the amount of useful energy produced for a given quantity of the original mineral resource. The future availability of nuclear energy is of crucial importance to the corresponding availability of transportation fuels because of its potential for releasing fossil fuels from stationary uses.

It is customary to begin a discussion of the long range availability of nuclear energy with a review of uranium resources. An AEC study cited by NPC estimated the following position as of 1/1/72:

	1000 Tons of U_3O_8 (Cumulative)	
Cost of Production, $lb.	Reasonably Assured (Proved Reserves)	Estimated Additional (Potential Reserves
$8 or less	273	460
$10 " "	423	650
$15 " "	625	1000

There are many problems with translating such figures into nuclear capability. The first concerns mining practice. NPC says "...existing underground mining operations are not recovering low-grade ores which have been adjudged to be capable of yielding U_3O_8 at costs in the range of $8 to $15 per pound. Once these ores have been by-passed during the initial mining operation, the likelihood of recovering the remaining U_3O_8 for $15 per pound or less, in many mines, is very small". Thus, the apparent increment in U_3O_8 availability between $8/lb. and $15/lb. of 625,000-273,000 = 352,000 tons may be illusory.

There is far more uncertainty about how the uranium will be used, how much will be needed, and when other potentially utilizable materials such as thorium will enter the picture. AEC's estimates of thorium resources, at two price levels, are:

Cost of Production	(Resources, 1000 Tons) Identified	Potential
$10/lb. or less	65	325
$30/lb. " "	200	400

Current, light-water reactors (LWR) are either "pressurized water" (PWR) or "boiling water" (BWR). Each of these reactor types achieves about a 1.5% utilization of the uranium "burned". A significant improvement in fuel efficiency is possible with the high temperature gas-cooled reactor (HTGR). However, the efficiency of utilization could jump to 70% or higher with the light metal fast breeder reactor (LMFBR). Both the HTGR and LMFBR can make use of thorium as well as uranium. In the very distant future, nuclear fusion, if proved to be feasible, holds the potential of energy supplies that would not be limited by uranium-type natural resources. NPC provides additional information about these resources:

> "Uranium as it is found in nature contains about 0.7% of the isotope U_{235} with the remainder being the isotope U_{238}....enrichment...in the AEC's gaseous diffusion plants...(increases the percentage of U_{235}) to 2 to 3 percent which is required for the LWR's. The isotope U_{238}, which comprises 97-98% of the enriched uranium fuel, can contribute significantly to power production only after it is transformed into a fissionable isotope of plutonium (Pu) within the reactor....Fissile fuels such as U_{233}, U_{235}, and Pu_{239} are those which undergo fission; fertile fuels such as thorium and U_{238} absorb neutrons to produce a fissile fuel (U_{233} and Pu_{239} respectively)... HTGR's use highly enriched uranium (approx. 93% U_{235}) as the fissile fuel and thorium as the fertile fuel".

NPC's projections of nuclear electricity capacity are summarized below (1000 MWe, i.e., GWe*):

	Case 1	Case 2	Case 3	Case 4
1972	22	22	22	11
1975	64	64	64	28
1980	188	188	150	107
1985	450	375	300	240

In addition, NPC projected the four cases to the year 2000 to "establish the requirements for exploration and the development of forward reserves of natural uranium through 1985 and to analyze the trends in demand for and supply of nuclear energy to the end of the century". The post-1985 projections involve fast breeder reactors as well as current reactor types (PWR, BWR, and HTGR). The first section of the table shows

* Megawatts electric and Gigawatts electric.

the projected totals of electricity generating capacity in terms of 1000 MWe. The lower section shows the percentage of this capacity projected to be in breeder reactors:

	Nuclear Capacity, 1000 MWe			
	Case 1	Case 2	Case 3	Case 4
1990	750	625	500	400
1995	1065	890	710	568
2000	1470	1225	980	785

	% of Total Capacity in Fast Breeder Reactors			
	Case 1	Case 2	Case 3	Case 4
1990	10	10	10	1
1995	25	25	25	18
2000	39	39	39	37

NPC characterizes Case 3 as being "an orderly growth of nuclear power... a 'medium' nuclear energy demand case...closely approximates the AEC's 'most likely case'...current (i.e., 1972) licensing and legal problems are expected to be largely resolved during the next 2 or 3 years. The lead time required from order to plant operation drops to 6 or 7 years ...". Case 2 is similar to Case 3 but also assumes that there will be a marked preference for nuclear plants over fossil-fueled plants because of increasingly stringent air pollution regulations and limited availability of clean fossil fuels. Case 1 assumes that both government and industry join in a maximum effort to increase U.S. nuclear power capacity. Case 4 assumes that "environmental constraints, manufacturing and technical problems of more than a routine nature, and regulatory difficulties all continue to cause planning and construction delays such that only those plants already ordered by 1971 will go into operation by 1980...plant completions pick up after 1980, but the installed capacity by 1985 falls 20% short of Case 3".

A study (6) by the Staff of the Joint Commission on Atomic Energy (JCAE) has observed that "recent indications suggest that our actual nuclear power production will be 15% or so less than what is shown here* ..." and also: "...it will be noticed how our slippage in nuclear power in the year 1980 alone will require well over one-half million barrels per day of oil equivalent**".

---

* Reference is to NPC's "Initial Appraisal".

** Oil equivalent is a quantity of energy. For crude oil of average quality, 1 B.O.E. approximates 5.8 MM BTU. However, there is no implication that the energy has to be supplied in the form of oil. In round figures 500 MB/D O.E. are equivalent to 45 million short tons of coal per year.

It should be explained that NPC's "Initial Appraisal", the Case 3 referred to in the previous section, and projections made by the AEC in 1968, all estimate the same levels of nuclear capacity for 1975, 1980, and 1985. However, the AEC made further estimates in 1972, and it is to these later estimates that the JCAE refers as being "15% or so less..." Quantitatively, the various projections are:

	Nuclear Capacity, (1000 MWe)		
	AEC (1968)	AEC (1972)	NPC Case 3
1980	150	132	150
1985	300	280	300
1990	500	508	500
2000	1000	1200	980

The staff study implies that the recent trajectory has been intermediate between NPC's Case 3 and Case 4, that this slowdown relative to previously estimated "most likely" cases will exert an impact through 1980 but, eventually, an acceleration will occur such that nuclear capacity in the year 2000 will be higher than previously projected. Clearly, AEC's 1968 estimates and NPC's Case 3 are equivalent. However, the differences between the two AEC projections are important. On a percentage basis they are:

	% Difference
	AEC (1972) - (1968)
1980	-12
1985	- 7
1990	+ 2
2000	+20

The staff study also cited an information report made to the JCAE on 3/7/73 by the Atomic Industrial Forum. AIF's estimates, shown below, were developed as "the maximum which would be feasible providing the limitations presently imposed by specific factors such as licensing, development of additional uranium supplies, technical and construction manpower limitations, and so forth are significantly diminished, and a massive national effort is made to develop the nuclear systems". NPC's Cases 1 and 2 are reproduced for comparison:

	Nuclear Capacity, (1000 MWe)		
	AIF (1973)	Case 1	Case 2
1980	146	188	188
1985	365	450	375
1990	700	750	625
2000	---	1470	1225

Here, it must be observed that delays have continued since 1972 such that what may have been attainable in 1980, under "maximum" conditions, from a starting point two years ago is no longer attainable now. With more than a year's slippage, neither NPC's Case 2 nor AIF's estimate for 1985 seems feasible now and, clearly, NPC's Case 1 is not.

A simple way of constructing a new "maximum" case from today's vantage point is to assume that AIF's trajectory is possible but that a slippage of one year will not be recoverable. In this way, a modified AIF projection (indicative of maximum possible nuclear capacity) may be compared with AEC's 1972 projections (indicative of what is more likely assuming that national energy policy is soon able to reduce lead-times and overcome other problems). The difference between these two sets of numbers may be used for various purposes. One application is to calculate the maximum amount of nuclear capacity that might be applicable to synthetic fuels production if a maximum nuclear effort is begun almost immediately. Such a maximum effort is extremely unlikely, hence the implication is that the nuclear capacity available for synthetic fuel production will be at some lower level.

	Nuclear Capacity (1000 MWe)		
	Modified AIF	AEC (1972)	Differential
1980	120	132	-12
1985	300	280	20
1990	608	508	100
2000	1450ø	1200	250

ø extrapolated

The above calculation implies no spare capacity whatever in 1980 but the possibility of some "applicable" capacity by 1985, particularly if electricity demand in general grows more moderately than previously estimated*. At a continuous capacity utilization factor of 77.5%, 100 GWe of capacity would generate about 680 x 10^9 KWH having a thermal equivalency of about 6.5 x 10^{15} BTUs on a heat input basis. In turn, this quantity is equivalent to 3 MM B/D of oil. This does not imply that all of the heat generated by 100 GWe of nuclear capacity would be utilizable. However, it does suggest that by 1990 some combination of the following may be possible:

* NPC projected total electricity generation to increase 7.0%/yr. from 1975 to 1980 and 6.1%/yr. from 1980 to 1985. With forced and voluntary conservation of electricity now in effect, lower rates of future consumption are projectable for current uses of electricity.

(a) A saving of about 2 MM B/D of oil or other fossil fuels that would otherwise be required for process heat*, thereby "releasing" such fossil fuels for other purposes including, in part, automotive uses.

(b) Direct application of the nuclear capacity to the production of synthetic fuels. Using current best technology for producing hydrogen by electrolysis, the hydrogen producible with 680 x 10^9 KWH would be equivalent to 0.6 MM B/D of oil.

(c) Application of the electrical capabilityto ground transportion systems (mass transit and/or electrically powered private vehicles).

By the end of the century, any or all of these possibilities could be operational at a significant level. Nevertheless, this level would be much below the total energy requirements of ground transportation. For example, the 250 GWe "differential" in the above tabulation is regarded as a maximum that is unlikely to be realized. It is even more unlikely that all of this "differential" would be applied to automotive fuels. However, if this were to be done and if the entire product were automotive hydrogen, then the quantity would approximate 1.5 MM B/D of "crude oil equivalent" or a slightly higher volume of "gasoline equivalent" (say 1.7 MM B/D).

Long range, domestic resources of uranium and thorium appear adequate for conceivable levels of energy demand. However, a squeeze could occur by 1985 or shortly thereafter if several events occur in conjunction:

(a) Construction of new capacity to separate uranium (by diffusion or centrifugation) is delayed.

(b) Development of the breeder is delayed, thereby forcing continued reliance on reactors that do not utilize uranium efficiently.

(c) There are further delays, for some time, in bringing existing nuclear plants and those under construction fully on line--but this condition is followed by a rapid acceleration of getting nuclear capability on line, with an accompanying acceleration in the demand for nuclear fuel.

The potential problems are due to long lead-times in the various elements of an industry of high capital intensity that is growing rapidly but unevenly.

* Uses of nuclear heat, other than for generating electricity, are already under development and could double the effective energy output of a nuclear plant. The application of nuclear heat to the manufacture of synthetic fuels, chemicals, and steel is under active consideration (5).

The possibility of a squeeze in uranium supplies around 1985 will be reviewed in the light of the capacity projections discussed above. By 1985 nuclear capacity could approximate NPC's Case 3 projection of 300 GWe. However, the cumulative consumption of uranium concentrate would be somewhat below that projected for Case 3 because of a lower level of nuclear electricity generation during the earlier years of this time period.

Case 3 projects a cumulative requirement of 500,000 short tons (ST) of U_3O_8 through 1985. However, the cumulative requirement would be about 440,000 ST if the Case 4 annual usage were to be approximated until 1980 and Case 3 usage from 1980 to 1985. These quantities may be compared with the estimated domestic reserves of U_3O_8 available at $8/lb.:

	Proved	Potential	Total
1000 ST of U_3O_8	273	460	733

Thus, adequacy of supplies seems likely through 1985. However, the requirements in 1985 would be at an annual level of 70,000 tons and would be increasing at an annual rate of about 11%. Hence, the remaining reserves of "$8" U_3O_8 would be exhausted before 1990 if this rate of consumption were to continue. This is an unrealistic scenario. One possibility, if it becomes apparent that the fast breeder will be seriously delayed, is a slowing down in the ordering of LWRs. Another possibility is the utilization of higher cost uranium resources. A further alternative is the procurement of foreign U_3O_8, and several U.S. electric utilities are exploring this possibility. However, the availability and cost of petroleum in W. Europe and Japan is having a predictable effect on acceleration of the development of nuclear energy. Hence, there is no assurance that the U.S. will have access to all of the foreign U_3O_8 that it might wish to purchase post-1985. Imports from Canada seem feasible*, yet some Canadian production has already been contracted to W. Germany. Fuller analysis of these questions is beyond the scope of the contract, but it is judged that:

(a) Any serious delay to the development and subsequent rapid commercialization of the fast breeder reactor may constrain the rate at which new orders are placed for nuclear capacity. This could occur before 1985.

(b) Scenarios that involve a build-up of nuclear capacity that is significantly more rapid than NPC's Case 3 or AEC's 1972 projections should also resolve item (a).

(c) An "all nuclear" scenario, not involving the use of fossil fuels, is unrealistic until well into the 21st century (i.e., is infeasible by the year 2000).

* When permitted by U.S. law.

APPENDIX 3

REFERENCES

(1) "Energy Resources of the United States," Geological Survey Circular 650, P. K. Theobald, S. P. Schweinfurth, and D. C. Duncan, 1972.

(2) "Mineral Resource Estimates and Public Policy," V. E. McKelvey, American Scientist, Vol. 60, No. 1, 1972.

(3) Prepared by Resources for the Future, Inc., at the request of Senator Henry M. Jackson, Chairman of the Senate Committee on Interior and Insular Affairs; Committee Print Serial No. 93-21, 1973; Chapter 5.

(4) Reported in Appendix 3, Table 13 of "Long Range Sulfur Supply and Demand Model" (prepared under EPA Contract No. EHSD 71-13), and based on data from "The Economy, Energy, and the Environment," Environmental Policy Division, Legislative Reference Service, Library of Congress, September 1970.

(5) Proceedings of Meeting on Nuclear Process Heat by Commission of the European Communities, Brussels, 1973.

(6) "Certain Background Information for Consideration when Evaluating the National Energy Dilemma," staff study prepared at the request of the Chairman of the Joint Committee on Atomic Energy, Joint Committee print, May 1973.

APPENDIX 4

POSSIBLE APPROACH OF OTHER COUNTRIES TO ALTERNATIVE TRANSPORTATION FUELS

Although no supporting statistical evidence will be presented here, it is expected that a shortage of petroleum fuels for transportation will occur in W. Europe and Japan long before it need occur in the U.S.* Prospects for synthetic fuels (other than hydrogen derivable from nuclear energy) are limited or negligible in W. Europe and Japan. Hence, it is anticipated that these countries will be forced to solve the "alternative fuels" problem before the U.S. is forced to do so, and also that the foreign solution to this problem will affect what subsequently occurs in the U.S.

Hydrogen from nuclear energy is a technical, but not a practical, solution for W. Europe and Japan except in the very long range future. This is because a high priority will have to be assigned to the development of nuclear capability fast enough to provide industrial energy to maintain economic development. Therefore, the solution of the problem in W. Europe and Japan is likely to be heavily weighted towards effective ground transportation systems powered by nuclear electricity. Initially, and already in progress, is the development of effective mass transit systems. Eventually, by the time that sufficient nuclear capability is available, electrically powered private vehicles seem likely (on a far larger scale than exists today). At this stage, there would be a theoretical choice between using the incremental nuclear capacity (a) to make hydrogen for automotive purposes or (b) to power electric vehicles. The latter is expected to be the choice because it would be a development that could occur incrementally from a base that already exists.

Once sufficient nuclear capability has been developed in W. Europe and Japan, petroleum is likely to be conserved for applications for which electricity is not suitable. Hydrogen as a fuel will not be feasible until nuclear capability can satisfy essentially all stationary uses of energy as well as an effective ground transportation system. And, when this condition occurs, there would not seem to be any need for fuel hydrogen despite its technical feasibility.

These comments relate to the ways in which the future uses and availability of synthetic fuels and conventional fuels are conceptualized. It is important to place the automotive fuels question in a broad context of energy supply and demand and in relation to what may occur in other countries. What happens abroad may influence what occurs in the U.S.

---

* Excluding the shortage induced by the Arab oil embargo.

APPENDIX 5

BUILD-UP OF SYNTHETIC FUELS MANUFACTURING CAPACITY

The delivered cost of imported petroleum is already at, or above, the cost-plus-return-on-investment level estimated for synthetic fuels from domestic resources. Whether this situation will continue will depend primarily on events outside the U.S., and the outcome is a matter for political rather than technical analysis. However, an assumption that the situation will continue leads immediately to two questions:

(a) how soon can synthetic fuels become available?

(b) what quantities can be available at what times in the future?

Tentative answers are given in this Appendix, together with an explanation of the basis on which the schedule of capacity build-up was constructed. Additionally, it is explained why much of the answer has to be found outside of published projections of synthetic fuel availability. The Appendix is prefaced by an overview that places synthetic fuels in a broader energy context and summarizes the quantitative estimates made subsequently. The Appendix ends with a review of a study sponsored by the Senate Committee on Interior and Insular Affairs.

Overview of Synthetic Fuels Capacity

The quantitative potential for manufacturing synthetic fuels depends not only on the resource base but also on the rate at which the resources can be brought into production. This section considers the quantitative extent to which synthetic fuels from coal and oil shale may contribute to the nation's total energy supply. No attempt is made here to predict the extent to which the synthetic fuels will be used for automotive purposes. However, the projections may be taken as an indication of what the upper limit of such use may be.

A summary of the projections for the different synthetic fuels is given in Table 1. On the basis of product BTU'S, the projections imply the following growth rates for production of synthetic fuels in aggregate:

Period	Growth, %/Year
1980 - 1985	43
1985 - 1990	19
1990 - 1995	12
1995 - 2000	10

The projected schedules for the different types of synthetic fuels:

APPENDIX 5

TABLE 1

PLAUSIBLE SCHEDULE FOR PRODUCTION OF SHALE OIL, COAL LIQUIDS AND COAL SYNGAS

	Shale Oil		Coal Liquids		Coal Syngas		Total	Raw Coal
Year	MB/D	10^{15} BTU	MB/D	10^{15} BTU	TCF	10^{15} BTU	10^{15} BTU	Million ST*
1978	-	-	-	-	0.08	0.08	0.08	5
9	50	0.11	-	-	0.2	0.2	0.3	12
1980	100	0.22	-	-	0.4	0.4	0.6	24
1	150	0.33	50	0.11	0.6	0.6	1.0	43
2	200	0.45	100	0.22	0.8	0.8	1.5	60
3	250	0.55	200	0.45	1.1	1.1	2.1	87
4	300	0.66	300	0.66	1.5	1.5	2.8	127
5	400	0.9	400	0.9	1.9	1.9	3.7	163
1990	900	2.0	900	2.0	4.7	4.7	8.7	343
1995	1600	3.6	1600	3.6	8.3	8.3	15.5	692
2000	3200	7.2	2700	6.0	11.6	11.6	24.8	1024

* In terms of bituminous coal (11,500 BTU/lb.).

Notes:

(1) The above projections are for average production during the year.

(2) The BTU values refer to the heat content of the total annual production.

(3) Arbitrarily, the heat content of 1 barrel of shale oil or of coal liquids is taken as 6 MM BTUs. Actually, the coal liquids may have a slightly higher heat content.

(4) Coal syngas includes both Hi-BTU and Lo-BTU gas. Volumes are corrected to 1000 BTU/CF.

EPA-460/3-74-009

(1) are believed to be realistic in terms of when first commercial production may be expected (in the absence of national priority such as was given to the Manhattan Project).

(2) have been kept comparable in growth rate since insufficient evidence is available for biasing the schedules towards or away from any given synthetic.

(3) in aggregate, are believed to be feasible with respect to construction capabilities, i.e., more emphasis on any one synthetic might force reduced emphasis elsewhere.

Item (3) applies primarily to the first part of the next decade. Beyond 1985, it may be that construction capability could be increased substantially. For this to happen will require the groundwork to be laid quite soon. The impact of construction requirements in the electric utility industry must also be kept in mind.

The total capital investment, in mining and primary conversion facilities, required for the projected 1985 production levels would be about $17 billion*. However, the actual amount of capital invested would be higher than this figure due to investments in additional plants not yet on stream. The total investment would exceed $20 billion and, by 1985, would be at the annual rate of approximately $3.5 billion. These figures may be compared with those for total energy investments in Table 2:

(a) The cumulative capital requirements are shown for the period 1971-1985 for NPC's Cases (1) and (2), with electricity generation and transmission separated from other energy investments.

(b) The estimates in (a) are converted from 1970 to 1973 dollars.

(c) An intermediate case is constructed that is one-third of the way from Case (2) towards Case (1).

(d) An estimate of capital invested from 1971 to 1973 is deducted from the total in (c), and the approximate annual rate of investment in 1985 is estimated.

The comparison suggests that about 4% of total energy investments may go into synthetic fuels between now and 1985, and that synthetics may account for about 5% of the annual total in 1985. These percentages would be about doubled if electricity generation and transmission were to be excluded from the total energy estimates. However, it must be pointed out that the estimates are only rough approximations because:

---

* In 1973 dollars, converted from NPC estimates (for various types of facilities) in 1970 dollars. Costs have escalated more rapidly than general inflation since the NPC study, hence the numbers derived from the NPC study should be considered low.

APPENDIX 5

TABLE 2

NPC PROJECTIONS OF CAPITAL REQUIREMENTS FOR ENERGY INDUSTRIES

Included	Excluded
Resource development	Petroleum marketing
Processing	
Primary distribution	Gas distribution
Power plant construction	
Transmission	Electricity distribution
Water resources	Development of overseas resources

(A) 1971-1985 Capital Requirements

	Billion 1970 $	
	NPC Case (1)	NPC Case (2)
Electricity generation and transmission	235.0	235.0
All other	312.4	272.2
Total	547.4	507.2

(B) 1971-1985 Capital Requirements

	Billion 1973 $	
	Case (1)	Case (2)
Electricity generation and transmission	263	263
All other	350	305
Total	613	568

(C) 1971-1985 Capital Requirements

	Intermediate Case*
Electricity generation and transmission	263
All other	320
Total	583

* 1/3 of the way from Case (2) towards Case (1).

(D) 1974-1985 Capital Requirements

	Billion 1973 $
Total	532
Approx. annual rate in 1985	72

- Based on NPC's "U. S. Energy Outlook," Chapter 14 and Table 180.

EPA-460/3-74-009

(1) The NCP estimates relate to levels of consumption that are no longer likely to occur.

(2) On a unit basis (i.e., investment required to produce a given amount of energy), the NPC estimates are too low because:

(a) Petroleum imports are expected to be lower than projected by NPC (thereby leading to higher levels of domestic investment).

(b) Synthetic fuels and nuclear power investments are more capital intensive than investments associated with conventional petroleum particularly if much of the latter is assumed to be imported*.

(3) Costs have escalated since the NPC study was made.

While it is not known whether the total investments in Table 2 are overstated or understated, the percentage of total energy investments projected for synthetic fuels is probably understated. Whatever scenario is preferred for synthetic fuels, high investments are expected in the aggregate of:

(1) Exploration for domestic petroleum (crude oil and natural gas).

(2) "Conventional" petroleum refining.

(3) Coal mines for the satisfaction of domestic and export requirements for solid coal (i.e., coal other than that used to make synthetic fuels).

(4) Electric utilities.

(5) Nuclear energy.

Published Forecasts of Synthetic Fuels Production

Although there are numerous forecasts that refer to synthetic fuels, few are independent. For example, a recent study (1) projects the following:

	MMB/D of Oil Equivalent		
	1975	1980	1985
Shale oil	---	---	0.1
Coal SNG	0.2	0.5	0.7

* The investments associated with the production of foreign oil are excluded from Table 2.

However, it turns out that the above numbers were taken from a report (2) by the staff of the Joint Committee on Atomic Energy. The first page of this study notes:

"The staff has developed an energy display system...The data displayed are based on past history for the years of 1960 and 1970, and projections for 1980 and 1985, all of which were published approximately two years ago by the Lawrence Livermore Laboratory (3) based primarily on information released by both the Department of the Interior and the National Petroleum Council."

Tracing back further, it is found that the original references cited are:

- "America's Energy Needs and Resources," remarks by the Hon. Hollis M. Dole, Asst. Secretary for Mineral Resources, at Palo Alto on 1/12/71.

- "U.S. Energy Outlook. An Initial Appraisal 1971-1985." National Petroleum Council, 7/15/71.

Subsequently, both the D.O.I. and the NPC have superseded their 1971 studies. In December 1972 the D.O.I. published "United States Energy through the Year 2000," while the NPC published its final report on the "U.S. Energy Outlook" at the same time. While it must be expected that both of these reports will be superseded*, they are the most useful comprehensive energy supply studies presently available. Pertinent elements of both will be reviewed next. Some information discussed in other sections of the report will be repeated. This is unavoidable in the interest of making this Appendix as complete as possible in itself so as to relieve the reader from having to refer to other parts of the report.

The D.O.I. makes separate projections for (a) synthetic gas, (b) synthetic liquids, and (c) a catch-all category called "supplemental supplies." The explanation of the latter is worth quoting in full:

"Between now and 1980, these supplemental supplies must come either in the form of imported oil from foreign sources or incremental production from conventional domestic resources, both onshore and offshore, to the extent that it may be made available through increased discoveries of new reserves. The proportion which each of these sources will contribute is dependent primarily upon governmental policies, environmental restraints, and economic conditions during this period. Beyond 1980, supplemental supplies will come not only from these sources but also from such nonconventional sources as shale oil, tar sands, and coal liquefaction. Development of new technologies will also be a contributing factor to the extent to which these new energy forms are made available."

---

* Probably by up-dating studies by both the D.O.I. and NPC, and also new material from the Federal Energy Administration.

The quantitative D.O.I. projections are reproduced in Table 3. Immediately apparent is that the projected quantities of "synthetic gas" and "synthetic liquids" are small in relation to "supplemental supplies." On an input BTU basis (which makes allowance for consumption of primary energy in synthetic fuels processes), the combination of "synthetic gas" and "synthetic liquids" amounts to 8.5% of "supplemental supplies" in 1980, with the percentage rising to 13.6 in 1985 and 19.3 in the year 2000.

The scenario for the alternative automotive fuels contract is compatible with the Administration's "Project Independence," i.e., much of the "supplemental supplies" will have to be in the form of synthetic fuels rather than imported petroleum. However, the level of "supplemental supplies" projected by D.O.I. is probably unattainable. Indeed, "independence" requires energy conservation far beyond what is projected by D.O.I. Hence, it is not legitimate to use D.O.I.'s projections of "supplemental supplies" as a forecast of synthetic fuels production. At the same time, the level of synthetics production specifically forecast by D.O.I. is clearly inadequate for "independence".

Four different cases of supply were examined in NPC's final report. As noted in Table 4, NPC considered Case (1) hard to attain because of its dependence on rapid removal of a number of constraints--most of which are still in effect a full year after the report was issued. Case (4) assumed that the constraints on development of domestic energy resources would be maintained. There is reason to believe that this situation has begun to change and, hence, that Case (4) is too pessimistic. Cases (2) and (3), which are intermediate between (1) and (4), seem probable for the medium term. However, after a significant near-term time-lag, the conditions for Case (1) may still be achievable and, in the long run, surpassed. It should be noted that NPC's detailed projections extended only to 1985 and, thus, deal with only the very early stages of the synthetic fuels industry.

The D.O.I. and NPC projections are compared in Table 5. When considered on the same basis, the D.O.I. projections fall between NPC's Cases (1) and (2) but are closer to (1) than to (2). The data in Table 5 are for synthetic <u>products</u> (not the primary energy input needed to make these products) and hence, their BTU content may be related to the projected demand of the final consuming sectors (i.e., excluding the energy consumed in conversion processes ahead of the final consuming sectors). On this basis, the synthetics in NPC's Case (1) would supply 5.9% of the total energy demand of the final consuming sectors. All of the other cases would contribute a smaller percentage of final demand. From the standpoint of synthetic fuels, NPC's Case (1) for 1985 may be characterized as follows:

(1) About equal volumes of syncrude from shale and coal.

(2) About 50% more BTUs from coal syngas than from either coal or shale syncrude.

APPENDIX 5

TABLE 3

D.O.I. PROJECTIONS*

	1980	1985	2000
Synthetic Gas (Based on Table 12 of D.O.I. Study)			
Coal - Million Tons	19	86	308
- Trillion BTUs	430	2000	7140
Petroleum - Million Barrels	84	128	105
- Trillion BTUs	440	670	550
Total Inputs - Trillion BTUs	870	2670	7690
Total Output (Gas Produced)			
- Trillion CF	0.7	2.0	5.5
- Trillion BTUs	700	2000	5500
Synthetic Liquids (Based on Table 16)			
- Million Barrels	--	180	365
- Trillion BTUs	--	1000	2010
Supplemental Supplies (Based on Table 16)			
- Million Barrels	3875ø	4885øø	9125øø
- Trillion BTUs	18,420	27,100	50,160

ø = all imports

øø = new (conventional) domestic supplies, imports, shale oil, coal liquids, etc.

* "United States Energy through the Year 2000," Walter G. Dupree, Jr., and James A. West, Department of the Interior, December 1972.

EPA-460/3-74-009

APPENDIX 5

TABLE 4

NPC PROJECTIONS*

		Case 1	Case 2	Case 3	Case 4
1980					
Shale Syncrude	MM B/D	0.15	0.10	0.10	--
Coal "	"	0.08	--	--	--
Coal Syngas	TCF	0.6	0.4	0.4	0.2
1985					
Shale Syncrude	MM B/D	0.75	0.40	0.40	0.10
Coal "	"	0.68	0.08	0.08	--
Coal Syngas	TCF	2.5	1.3	1.3	0.5
1980					
Shale Syncrude	Trillion BTU	296	197	197	--
Coal "	"	175	--	--	--
Coal Syngas	"	512	329	329	165
		983	526	526	165
1985					
Shale Syncrude	"	1478	788	788	197
Coal "	"	1489	175	175	--
Coal Syngas	"	2269	1208	1208	494
		5236	2171	2171	691

Notes: Above statistics do not include the primary energy consumed in the conversion processes.

Case 1 is considered difficult to attain because it requires early resolution of environmental issues, ready availability of government land for energy resource development, adequate economic incentives, etc. Case 4 makes pessimistic assumptions about these factors. Cases 2 and 3 are intermediate, and make relatively optimistic assumptions about the finding rate for conventional petroleum and for the development of nuclear generating capability.

* "U.S. Energy Outlook," National Petroleum Council, December 1972.

EPA-460/3-74-009

APPENDIX 5

TABLE 5

COMPARISON OF D.O.I. AND NPC PROJECTIONS FOR 1985

	D.O.I.	NPC Case (1)	(2)	(3)	(4)
Shale Syncrude - MM B/D	N.S.	0.75	0.40	0.40	0.10
- 10^{12} BTU	--	1478	788	788	197
Coal Syncrude - MM B/D	0.5	0.68	0.08	0.08	--
- 10^{12} BTU	1000	1489	175	175	--
Coal Syngas - TCF	2.0	2.5	1.3	1.3	0.5
- 10^{12} BTU	2000	2269	1208	1208	494
Total Synthetics - 10^{12} BTU	3000	5236	2171	2171	691
ditto excl. shale oil	3000	3758	1383	1383	494

For 1985, D.O.I. estimated a primary energy demand of 116.6 x 10^{15} BTU and a net energy demand in final consuming sectors of 89.7 x 10^{15} BTU.

Total Synthetics as % of:					
- Total Primary Energy	2.6	4.5	1.9	1.9	0.6
- Consuming Sector Demand	3.4	5.9	2.4	2.4	0.8

Note: D.O.I. projections exclude shale oil and other synthetics that are buried in the "supplemental supplies" category.

EPA-460/3-74-009

(3) A significant, but still minor, percentage of total energy demand supplied by synthetics.

(4) An implication that synfuel production could be in a rapid uptrend by 1985, i.e., production in subsequent years could be much higher than the volumes projected for 1985.

Recent Information

Important events since publication of the D.O.I. and NPC forecasts in December 1972 have included the President's energy message of April 1973, the Arab oil embargo, the creation of a Federal Energy Agency, the expansion and more centralized control of government and government-sponsored research on energy, some changes in the controls on energy prices, and a number of Congressional bills whose fate is not yet determined. In total, many changes have occurred while many others are in prospect, although it is not clear what they will be. A plausible scenario is that delays will continue until several controversial issues are settled, that these issues will be substantially settled before the end of 1974, and that an accelerating rate of development will occur subsequently. However, it is already apparent that construction capability and manpower will be rate-limiting factors even if all other obstacles can be overcome.

While the shortages may be temporary, oil field supplies (e.g., steel pipe and drilling rigs) are already limiting drilling activities. Backlogs of work by engineering contractors are increasing. Although construction labor is not tight yet, there are widespread predictions that this will occur, particularly when construction of the Alaska pipeline begins to siphon off manpower from the "lower 48" states. The need to plan the sequential construction of Athabaska tar sands projects in Canada has been recognized. A shortage of roof bolts is delaying the construction of coal mines. A persistent shortage of railroad hopper-cars is restricting the movement of coal and other commodities, and may lead to direct intervention by the Interstate Commerce Commission. The items cited are just a sampling, and are intended to support the conclusion that it will be extremely difficult, or even impossible, to advance the dates at which the first commercial-sized synthetic fuels plants can be on stream even though the earliest possible operation appears to be clearly in the national interest.

Schedules for the production of different types of synthetic fuels will first be discussed separately, and then considered on an aggregate basis.

Shale Oil

In testimony to the House Interior Mining Subcommittee in December 1973, John Hutchins, the manager of the Colony Development oil

shale plant, placed the maximum production of shale oil at 500 MB/D in 1985, "given the best possible conditions." For practical purposes, this estimate corresponds to NPC's Case (2) projection, since something less than "best possible" can be expected.

Announcing that the first lease sale of government shale lands would take place on January 8, 1974, Secretary of the Interior Rogers Morton said that the leasing program "will encourage oil shale development and allow us to learn whether our 600 billion barrel shale oil reserves can be developed at acceptable economic and environmental costs." This suggests that the first six shale oil producing facilities could be in operation by the end of 1981, and would have a combined capacity of about 250 MB/D. Allowing for some slippage in timing and for sustained production somewhat below the nominal capacity, this figure is compatible with Mr. Hutchins' estimate of a maximum of 500 MB/D in 1985. The D.O.I. schedule is about one year more optimistic than the Lawrence Livermore estimates (5) reported below:

Projected Start-Up Dates
of First Synthetic Fuels Plants

Type	Year
Shale Oil	1979
Lo-BTU Coal Gasification	1979
Solvent Refined Coal	1981
Hi-BTU Coal Gasification	1981
Coal Liquefaction	1982

The environmental impact statement (8) by EPA/DOI that preceded the announcement of the oil shale lease sale projected significant production of shale oil from properties already in private hands:

By end of	Leased Lands	Production, MB/D
1981	Private	400
1985	Private and Government	650

The EIS looked at the impact of shale oil production up to a level of 1 MMB/D, but without estimating when this level might be achieved. The EIS appears to be:

(1) conservative, in the sense that it considers the environmental impact of larger volumes of production than are likely until after 1985.

(2) optimistic, in terms of the level of production that is likely by 1985.

The difficulty in developing a schedule for shale oil production, for use in the alternate automotive fuels study, is that a judgment has to be made about the vector of a number of conflicting variables:

Favoring High Level of Production

(1) Extensive resource base

(2) Domestic resource

(3) Cost estimated to be moderate relative to alternatives

(4) Similarity of product to petroleum

Constraints to Production

(1) Environmental (disposal of spent shale, water availability, population/ecological pressures)

(2) Availability of leases

(3) High capital cost

(4) Construction time

(5) In situ technology not proven

Some of the above points have been highlighted as follows (9):

"The leasings announced last week will allow...the Department of the Interior to take stock of the environmental damage that results. After three or four years, the companies should be able to decide whether oil shale development is commercially attractive, and the Federal government will be able to decide whether the environmental costs justify throwing the whole area open to development."

"...production of 1 million barrels of shale oil a day will require the mining, processing, and dumping of 2 million tons of rock, and that would require a mining operation equivalent in size to the entire United States domestic coal industry."

"If it can be perfected, in situ production would have the advantage that little or no rock would have to be brought to the surface and eventually disposed of, so many of the environmental problems would not arise, and it would also use less water."

Similarly, the EIS stated: "It is obvious that considerable further improvements in in situ recovery are still required before industrial scale in situ recovery could become a reality."

Secretary Morton's reference to "600 billion barrel shale oil reserves"* may be used to illustrate problem quantitatively. If production in 1985 were to be 0.4 MMB/D, and were to grow thereafter at an annual rate of 20%, a production rate of 33 MMB/D or 12 billion barrels annually would be reached in nearly 25 years (i.e., around the year 2010). At that time, about one quarter of the 600 billion barrels would have been produced. If the rate stabilized at 33 MMB/D in the year 2010, production at that level might be continued for another 25 years such that in the year 2035 about three-quarters of the reserves would have been consumed. By this time, a decline in production might be assumed so that, after another 25 years (i.e., the year 2060), the entire deposit would be exhausted.

The above example is entirely hypothetical since it is not known whether it will ever be feasible to produce shale oil at the rate of 33 MMB/D. Nor is it known whether a growth rate of 20%/yr. could be sustained for more than two decades. From today's vantage point, both conditions seem most unlikely. The purpose of the example is to argue that:

(1) The existence of a large resource base does not imply that substantial production can be developed quickly.

(2) Factors other than the size of the resource base may set a ceiling on production rate.

(3) Strictly from the standpoint of resources, shale oil production may be feasible throughout the 21st century at production levels set by (2).

---

* The NPC estimates the total of shale oil <u>resources</u> in the Green River formation to be 1,781 billion barrels:

Class	Characteristics	Billion Barrels
1	Most favorably located; at least 35 gals./ton	34
2	" " " " " 30 " "	95
3	Less " " " " 30 " "	186
4	Poorly defined deposits; " " 15 " "	1466

Secretary Morton's figure includes all of the Class 1-3 resources and part of Class 4 deposits. The cut-off point in Class 4 is believed to be at 25 gals./ton. Secretary Morton's figure corresponds to the upper end of the range of "paramarginal" shale oil resources as previously defined by the U.S.G.S. and cited in Appendix 2.

A more moderate growth rate of 15%/yr. would lead to the following approximate schedule:

Year	Av. Production During Year, MMB/D
1979	0.1
1985	0.4
1990	0.9
1995	1.6
2000	3.2

The above schedule is a middle course. On the one hand, it is recognized that much larger volumes could be utilized much sooner. On the other hand, experience drawn from the petrochemical industry suggests that sustained growth rates of 15%/yr. are possible but uncommon for tonnage petrochemicals. A schedule compatible with the above production rates is given in Table 6. It is assumed that commercial production of shale oil by in situ methods will occur in the 1985-1990 timeframe. If suitable technology (to overcome environmental problems and water limitations) is not developed by this time, then it seems improbable that shale oil production could approach 3 MMB/D in the year 2000. Indeed, there is much speculation that the upper level may be about 1 MMB/D.

Coal Gasification

The schedule for coal gasification is pertinent to the alternative automotive fuels study for three reasons:

(1) The possibility that methanol may be made from syngas (CO and H_2, not from synthetic CH_4).

(2) Engineering and construction effort that is applied to coal gasification will tend to restrict the effort that is available for other syn fuel developments.

(3) Coal used for gasification must be subtracted from the coal potentially available for other purposes and, hence, gasification and liquefaction may be seen as being in competition for the same resource.

The D.O.I. and NPC projections for coal syngas have already been compared in Table 5. The D.O.I. forecast is substantially equivalent to NPC's Case (1). However, there has been some slippage in the schedule such that the 1985 "target" for coal syngas no longer appears achievable.

A report (6) by the National Gas Survey task force of the Federal Power Commission believes that five 250 MM CFD Hi-BTU coal gasification plants could be in operation by the end of 1980 and that

APPENDIX 5

TABLE 6

PLAUSIBLE SCHEDULE FOR BUILD-UP OF SHALE OIL CAPACITY AND PRODUCTION

Year	Nominal Capacity, MB/D at Year-End	Average Production, MB/D During Year
1979	100	50
1980	150	100
1981	200	150
1982	300	200
1983	350	250
1984	450	300
1985	500	400
1986	600	500
1987	700	600
1988	800	700
1989	900	800
1990	1000	900
1991	1100	1000
1992	1250	1100
1993	1400	1200
1994	1600	1400
1995	1800	1600
2000	3500	3200

Notes: For above schedule to be achieved, it is assumed that engineering and purchasing would begin 3-1/2 - 4 years before the start-up of each plant, and that construction would begin at least 3 years before plant start-up. For example, if an average of 50 MB/D of shale oil is to be produced from the first plant during 1979 then this plant would have to start up early in 1979. In turn, the construction would have to begin by mid-1975, while engineering and purchasing for the plant would have to start before the end of 1974.

EPA-460/3-74-009

16 such plants could be operating by the end of 1985. Nominally, each plant would have the capacity to produce 250 x 365 MM CF per year. However, the NPC considers that an operating factor of 90% should be applied. In this case, the annual production of each plant would be 0.082 TCF. Thus, using the FPC projection for numbers of plants, the level of Hi-BTU syngas production would be slightly less than 0.4 TCF in 1980 and slightly less than 1.3 TCF in 1985*. Each plant would require the following raw material input, with the volume depending on whether bituminous, sub-bituminous, or lignite coal was used:

	Million ST/yr.
bituminous coal	5.0
(or) sub-bituminous coal	7.2
(or) lignite	9.1

To the above should be added the prospects for considerable quantities of Lo-BTU gas that could be used directly by electric utilities, by certain industries, or for conversion to methanol. Whereas the Hi-BTU gas would have a nominal heat content of 1000 BTU/CF, the Lo-BTU projects may produce gas of various heat contents. Hence, it is convenient to consider the Lo-BTU gas projects on a Hi-BTU equivalency basis, i.e., to express their output as if it were gas of 1000 BTU/CF.

A plausible schedule of the build-up of coal syngas production is given in Table 7. It must be pointed out that the split between Hi-BTU and Lo-BTU gas is a matter of judgment, and that no attempt has yet been made to specify how much Lo-BTU gas may be converted to methanol**. The immediate purpose is to derive the coal production implications of the schedule. The current level of coal production, mostly bituminous coal, and inclusive of metallurgical coal for domestic use and export markets, is approximately 600 million ST annually. Hence, one implication of the projections in Table 7 is that, within the next 25 years, the syngas industry may require an increment in coal production equal to today's level of production. For the period 1982-2000, the growth rates projected for shale oil (Table 6) and for coal used to make syngas (Table 7) are comparable. As projected, Lo-BTU gas has a slightly higher growth rate than shale oil which, in turn, has a nominally higher growth rate than Hi-BTU gas. However, the rates calculated

---

* Actual production would be less than year-end capability since some plants would be brought on stream during the year.

** Interrelationships between syngas and methanol are discussed in Section 5.3. Capacity to produce 1 x 10^{15} BTU/yr. of syngas is approximately equivalent to 900 MB/D of methanol.

APPENDIX 5

TABLE 7

PLAUSIBLE SCHEDULE FOR BUILD-UP OF COAL SYNGAS PRODUCTION

Year	Annual Production, TCF			Coal Required Million ST(2)
	Hi-BTU	Lo-BTU(1)	Total	
1978	0.08	--	0.08	5
1981	0.4	0.2	0.6	37
1982	0.55	0.25	0.8	48
1983	0.7	0.4	1.1	62
1984	0.9	0.6	1.5	91
1985	1.1	0.8	1.9	115
1986	1.3	1.1	2.4	195
1990	2.4	2.3	4.7	235
1995	4.1	4.2	8.3	500
2000	5.6	6.0	11.6	700

(1) Lo-BTU gas reported in terms of Hi-BTU gas equivalency, i.e., corrected to a heat content of 1000 BTU/CF.

(2) In terms of bituminous coal. Corresponding tonnages of sub-bituminous coal or lignite would be higher because of the lower BTU contents of these lower rank coals. Tonnages may be overstated because of the lower amount of process energy required to make Lo-BTU gas, i.e., by not having to use energy for the methanation step required in the production of Hi-BTU gas. On the other hand, the conversion of Lo-BTU gas to methanol does have an energy requirement and, to the extent that the end product is methanol rather than Lo-BTU gas, the coal requirement on the basis of product BTU content would approach that of Hi-BTU gas production.

EPA-460/3-74-009

depend on the base year chosen. In general, the approach has been to estimate the initial year of commercial production and then assume that subsequent development would be about equally rapid for each synthetic*. On a product heat content basis, the projections are:

	10^{15} BTU	
Year	Shale Oil	Coal Syngas
1985	0.9	1.9
2000	7.2	11.6

Coal Liquefaction

The technical feasibility of making petroleum-type liquids from coal has been known for many years. However, it is only recently that the economic feasibility of coal liquefaction in the U.S. has begun to appear assured. The change has occurred because of very large increases in the cost if imported petroleum followed by relatively smaller, but still significant, increases in the average cost of domestic petroleum.

Previously, many forecasts had assumed that crude oil prices would rise, but that the rise would be gradual and, hence, the level at which coal liquids could compete would not be reached until about 1980. Thus, until recently, coal conversion research was concentrated more on gasification than on liquefaction. The present situation requires consideration of three factors:

(1) the marginal barrel of foreign crude oil is being delivered to the U.S. at a price comparable to that estimated to be required for coal liquids in order to provide a reasonable return on investment.

(2) "Project Independence" requires the development of adequate supplies of liquid fuels from domestic resources.

(3) Shale oil is expected to make an important, but insufficient**, contribution to (2), hence, coal liquids will be required also.

---

* Since there is no compelling reason for any other assumption.

** Because of the absolute rate at which this resource can be developed.

Thus, the present situation is giving a higher priority to coal liquefaction. On the other hand, the lead-time for liquefaction* is greater than for gasification. Doubtless, major efforts will be made to improve on the start-up date (1982) for the first coal liquids plant predicted by Livermore. However, it seems unlikely that more than two years could be shaved from the schedule of the first plant of commercial size. Of course, a number of large pilot plants will be in operation long before 1980, and it is the data from these plants that will be used in the design of the first plants of commercial size. The inference is that the first large coal liquids plant cannot come on stream before 1980 or 1981, but that the subsequent build-up of capacity could be quite rapid. This reasoning leads to the schedule proposed in Table 8.

Problems and Prospects

A recent study (7) by Resources for the Future, Inc., contains information about possible construction rates for synthetic fuels plants. The information was obtained as follows:

> "Interviews were conducted with 19 individuals or groups representing a wide range of interests in energy R&D. The research arms of energy trade associations, university professors, research directors in coal, oil, gas, and utility industries, private consultants, and Government personnel engaged in R&D activities were all asked the same questions..."

Direct citations or condensations of salient points in the RFF study are itemized below:

Assumptions

(1) "It was assumed that environmental delays would not occur...that the Government would provide the necessary incentives...that the plants would be standardized so that vendors could gear up to mass produce parts...."

(2) Two conditions were assumed:

(a) "forced draft": with priorities given to equipment for synthetic fuel plants (and other construction delayed, if necessary)

(b) "rolling in": along with other plant construction (oil refineries, petrochemical plants, etc.)

---

* Except for "solvent refined coal" (which will not be suitable as a source of automotive fuels, and is not intended for this purpose).

APPENDIX 5

TABLE 8

PLAUSIBLE SCHEDULE FOR BUILD-UP OF COAL LIQUIDS PRODUCTION

Year	Nominal Capacity, MB/D at Year-End	Average Production, MB/D During Year	Coal Required Million ST*
1980	50	-	-
1981	100	50	6
1982	200	100	12
1983	300	200	24
1984	400	300	36
1985	500	400	48
1990	1000	900	108
1995	1800	1600	192
2000	3000	2700	324

* In terms of bituminous coal. Corresponding tonnages of sub-bituminous coal or lignite would be higher because of the lower BTU contents of these lower rank coals.

EPA-460/3-74-009

(3) The plants are assumed to be:

(a) coal gasification (Lurgi): 250 MM CF/D (capital cost $350-400 million)

(b) shale oil: 100 MB/D (capital cost $500 million). At 90% operating factors, the energy output of these plants would be:

(a) coal gasification: 82 x 10^{12} BTU/yr.

(b) shale oil: 198 " "

i.e., the effective output of each shale oil plant would be 2.4 times the energy output of each high-BTU gas plant. (50 MB/D shale oil plants were also referred to in the questionnaires used for the interviews but, apparently, are translated into 100 MB/D units in the overall statistics reported)

Size of Engineering Design Industry

(4) "In 1971 design firms in the U.S. had billings of nearly $20 billion (including foreign work). The 51 largest contractors had billings of over $17 billion...14 had business of more than $400 million. Therefore, there appear to be about 14 firms able to act as prime contractors".

Manpower Limitations

(5) One firm thought: "The major constraint to the number of plants that could be started immediately, as well as the limitation to the rate of acceleration, was the large number of engineers needed to design the initial plants and the very limited number of engineers available with any skills in these new technologies".

(6) The same firm estimated that 300-400 engineers working for two years would be needed to design each type of synthetic fuel plant (i.e., 500,000-700,000 man-hours per plant).

(7) The same firm also thought that "construction crafts and labor (particularly in remote locations such as where the rich oil shale deposits are found) might also place a limitation on possible rates of construction" both initially and subsequently. A limitation of seven 100 MB/D shale oil plants was seen, with such plants being in operation 6-8 years hence.

Construction Rate

(8) Lastly, the same company could undertake one $400-500 million project now (either coal synthetic gas or shale oil) and could begin another about 1-1/2 years later. From this the study inferred that:

(a) if 14 contractors worked at this rate, there could be 70 plants in 1985

(b) if all of these plants were to make (shale) liquids, their total capacity would be 7 MM B/D.

(9) "The majority of the estimates for either high-BTU gas or oil shale were in the range of 12 to 15 plants in operation by 1985. Some doubt was raised that if both types of plants were to be constructed simultaneously as many as 24 to 30 would be possible."

(10) Other companies variously estimated the 1985 plant capability as:

(a) 40 plants

(b) 35-54 plants

(c) 24-36 plants

(11) With no assignment of engineering manpower to the design of oil refineries, petrochemical plants, LNG facilities, etc., about 29 synthetic fuel plants could be designed simultaneously.

(12) "With a level of construction of 6 plants per year to start and with a new generation of starts being made every 1-1/2 years thereafter, 36 synthetic fuels plants could be in operation by 1985." Apparently, the schedule would be:

Number of Plants	Start	On Stream
6	mid-1973	mid-1977
6	Jan. 1975	Jan. 1979
6	mid-1976	mid-1980
6	Jan. 1978	Jan. 1982
6	mid-1979	mid-1983
6	Jan. 1981	Jan. 1985
36		

(13) Based on an analogy with the construction of electric power plants, 35 synthetic fuel plants could be in operation by 1985. Another estimate was 36 plants.

Other Limitations

(14) Each coal gasification plant requires a 6000 T/D oxygen plant: "The entire U.S. capacity per year for constructing oxygen plants is of about the same order."

(15) "Synthetic fuel plants require a very large number of compressors. There are only 3 or 4 large compressor manufacturers in the U.S. and they are now, or soon will be, at full capacity. Apparently, they have no plans to expand since, if they do, there is not the foundry and forging capacity that could supply them."

Discussion of RFF Study

The assumptions that underlie long range projections are of critical importance. Different assumptions may be made for different purposes. The purpose here* is to assess the reasonableness of the synthetic fuel capacity estimates cited above. Item (1) is the tip-off. No reasonable person should assume that environmental delays will not occur**. Next, the "forced draft" condition in item (2a) is conceptually unsound, since there will be a need for oil refineries, petrochemical plants, etc., as well as for synthetic fuel facilities. The plant size assumptions in item (3) are questionable also. The first commercial shale oil plants will have a nameplate capacity of 50 MB/D. The first coal liquefaction plants are also likely to have capacities of 50 MB/D or perhaps less. Hence, the assumption in item (3) that all shale oil plants (and, by extension or implication, all synthetic liquids plants) will have capacities of 100 MB/D is incorrect. Nor can it be considered that the design and construction effort required for two 50 MB/D plants will be the same as for one plant of twice this size.

Item (4) contemplates that all of the 14 largest engineering design companies would be uniformly engaged in the design of synthetic fuel plants. This level of concentration is unlikely with synthetic fuels, but some specialization*** by the engineering companies is likely while some may not enter the field at all (perhaps concentrating on oil refining or petrochemicals and on foreign business). A high degree of standardization is improbable in the early stages of the industry. In fact, full-scale evaluation of alternative processes may be encouraged by the Government. Moreover, most of the companies for whom the plants are built will want a variety of special features incorporated into their own plants.

---

* RFF's purpose was quite different. Hence, the discussion here is not a criticism of RFF's study but, rather, a reinterpretation of the study's findings based on a critical review of the assumptions.

** Such an assumption is tantamount to assuming either that environmental problems do not exist or that such problems can be ignored.

*** e.g., some concentrating more on coal gasification than on oil shale processing, etc.

Manpower limitations are discussed in items (5)-(7). The last of these items also refers to a maximum shale oil capacity of 700 MB/D. The explanation is:

> "...rich oil shale resources that are found in a limited geographic area will be limited for physical reasons relating to difficulty of plant location, potential environmental pollution problems, and water availability to a possible maximum of seven 100,000 barrels per day plants. Thus the constraint on oil shale will be in total production until these limitations are somehow removed."

Item (8) indulges in the fantasy that 7 MM B/D of synthetic fuel capacity could be in operation in 1985. This "estimate" was picked up by the press, and may have aroused unrealistic expectations in the minds of the public as well as unnecessary apprehension by environmentalists.

Items (9) and (10) are straightforward. Item (11) involves a concept that has been objected to while discussing item (2). Many of the companies who may wish to build synthetic fuel plants are involved with oil refining, petrochemicals, etc. Hence, it is unrealistic to suppose that these companies would abandon all construction except that of synthetic fuel plants.

Regarding item (12), it is apparent that construction of 6 synthetic fuel plants did not start in mid-1973 or even in mid-1974. Hence, there has already been a slippage of over a year in item (12)'s schedule. However, work on 2 coal gasification plants has begun. Hence, the schedule could be revised to a maximum 32 plants in 1985. However, a number of the synthetic liquids plants will be smaller than the 100 MB/D unit considered in the study. Thus, as a first approximation, the 8 "small" plants listed below may be taken as equivalent to 4 x 100 MB/D synthetic liquids plants, such that the 36 actual plants would be roughly equivalent to 32 units as estimated in the study. On this basis, a breakdown of the 1985 capacity might be:

Type	Number of Plants	Unit Capacity	Total Capacity
Hi-BTU coal syn. gas	13	250 MMCF/D	3.25 billion CF/D
Lo-BTU coal syn. gas	10	250 MMCF/D*	2.50 billion CF/D*
Coal liquids	2	50 MB/D	100 MB/D
Coal liquids	2	100 MB/D	200 MB/D
Shale oil	6	50 MB/D	300 MB/D
Shale oil	3	100 MB/D	300 MB/D
	36 (32)		

* In terms of Hi-BTU gas, equivalent to 1000 BTU/CF.

From the above it is possible to estimate the volume of synthetic fuels that might be produced in 1985. This calculation requires several manipulations:

(a) application of an operating factor in order to convert from nameplate capacity to a daily average production rate (NPC suggests a factor of 90%).

(b) consideration that some of the plants would probably be starting up in 1985 and, hence, would not be operating for the full year of 1985.

(c) conversion of all of the estimated production to a common basis (for illustrative purposes taken as 6 MM BTU/bbl.).

Type	No. of Plants	1985 Production	1985 Avg. Production Converted to MB/D
Coal syn. gas	19	19 x 250 x 365 x 0.9 MMCF	710
Coal syn. gas(b)	4	4 x 250 x 365 x 0.45 MMCF	75
Coal liquids	3	4 x 50 x 365 x 0.9 MB	180
Coal liquids(b)	1	1 x 100 x 365 x 0.45 MB	45
Shale oil	8	10 x 50 x 365 x 0.9 MB	450
Shale oil(b)	1	1 x 100 x 365 x 0.45 MB	45
	36		1505

Thus, on the above basis, aggregate synthetic fuel production in 1985 would average 1.5 MM B/D O.E. If all of the plants denoted (b) in the above tabulation were fully operational throughout 1985, instead of some being assumed to come on stream during 1985, aggregate production would increase to 1.65 MM B/D O.E.*. If one year could be cut from the plant construction schedules between now and 1985, total production in that year could be about 30% higher, i.e., in the range of 2.0 - 2.1 MM B/D O.E. This level may be regarded as a maximum.

Item (13) is consistent with the estimates given above, i.e., a reasonable chance of producing an average of 1.5 - 1.6 MM B/D O.E. in 1985 and a slight possibility of reaching 2.0 - 2.1 MM B/D O.E. These levels, however, depend on assumptions that environmental and institutional barriers to synthetic fuels production are progressively removed. This is not the same as assuming that no environmental delays will occur, but rather that the delays will be reduced and no absolute roadblocks will be experienced. Without a generally favorable climate, maintained without interruption during the next decade, synthetic fuel production in 1985 will be substantially less than an aggregate of 1.5 MM B/D O.E.

* This figure exactly matches the projected total of synthetic fuels production given earlier in Table 1, although the "mix" of the various synthetic fuel plants is slightly different.

Finally, items (14) and (15) are noted as examples of obstacles that still have to be overcome. Doubtless, these difficulties will be surmounted if the business climate is favorable and remains so. Without this condition, it is clear that equipment as well as manpower could bottleneck the build-up of synthetic fuel capacity. A favorable business climate will also be essential to attract enough capital into a new industry that is extremely capital-intensive as well as being "high risk." The potential reward may be enough for the initial investments, but there will have to be a reasonable level of actual reward if the investment momentum is to be sustained.

APPENDIX 5

REFERENCES

(1) "The Challenge of Resolving the Energy Shortage," K. M. Elliott, Mobil Research and Development Corporation; presented at the Oil Daily Forum on 9/25/73.

(2) "Certain Background Information for Consideration when Evaluating the National Energy Dilemma," by staff of JCAE, 5/4/73.

(3) "Energy: Uses, Sources, and Issues," Lawrence Livermore Laboratory, UCRL-51221, 5/30/72.

(4) Private communication of 10/16/73 from H. R. Warman to L. G. Cook (Exxon Research and Engineering Co.) transmitting published paper on the future avilability of oil. See also Geophysical Journal, Vol. 138, Part 3, 1972, pp. 287-297.

(5) Lawrence Livermore Laboratory estimates cited in Business Week, 12/1/73.

(6) Cited by Electrical World, 11/15/73, page 47.

(7) "Energy Research and Development - Problems and Prospects," prepared at the request of Senator Henry Jackson (Chairman, Senate Committee on Interior and Insular Affairs) as a contracted study by Resources for the Future under the direction of Harry Perry; published as Senate Document No. 93-21.

(8) "Final Environmental Impact Statement for the Prototype Oil Shale Leasing Program," Vol. 1, U.S. Dept. of Interior, 1973.

(9) Nature, Vol. 246, 12/7/73, pp. 323-324.

APPENDIX 6

SIGNIFICANCE OF FUEL PROPERTIES

Volatility

- Determines the ease with which a fuel can be vaporized. In carburetted engines, it controls ease of starting, warm-up, and acceleration. A final boiling point above about 400°F. may result in excessive crankcase dilution and/or engine deposits. Excessively high volatility can give rise to vapor lock problems and/or carburetor icing.

- In fuel-injected engines (e.g., diesel, gas turbine) appreciably lower volatility (i.e., higher boiling point) can be tolerated. However, final boiling points above about 650°F. may not burn cleanly, particularly in high speed reciprocating piston engines where burning time is short. The time available for burning is a function of engine speed in reciprocating piston engines and of combustor size and air rate in engines using steady state combustion (e.g., gas turbine).

Vapor Pressure

- Another measure of fuel volatility. With carburetted engines, increasing vapor pressure improves ease of starting, but enhances dangers of vapor lock and carburetor icing.

Heat of Vaporization

- A measure of the energy required to convert a unit weight of fuel from a liquid to a vapor.

  In carburetted engines, the higher the heat of vaporization, the lower will be the temperature of the fuel-air mixture in the intake manifold, the greater weight of fuel (and air) inducted into the combustion chamber, resulting in more power per cycle. However, if the fuel-air mixture temperature becomes too low, a heterogeneous fuel-air mixture may result, causing poor engine operation. In this case, heat must be added to the intake manifold to vaporize the fuel.

  In the case of cryogenic liquids, it also represents the amount of heat that must be added to fuel storage to provide fuel vapor for the engine.

Heat of Combustion (Net)

- The amount of heat produced by burning a unit amount of fuel in air under stoichiometric conditions to gaseous products. The

lower the heat of combustion, the more fuel that must be carried aboard a vehicle to provide a given level of energy storage.

BTU/ft^3

- The amount of heat that will be generated by burning 1 cubic foot of a stoichiometric mixture of air and fuel. Everything else being equal, the higher this figure, the more power will be generated by a carburetted reciprocating engine of given displacement.

Octane Number

- Measures the resistance of the fuel to detonation in an Otto cycle engine. As octane number of a fuel is increased, the allowable engine compression ratio increases. Thus, high octane fuels are capable of increased miles/gal., since engine thermal efficiency increases with an increase in compression ratio.

  Research octane number measures knock resistance under less severe conditions than the Motor Octane Number. Heretofore, the road anti-knock performance of a gasoline could be correlated best with an average of the Research and Motor Octane Numbers. 1973 model U.S. cars now correlate best with Motor Octane Number.

  Octane Number has no significance with regard to fuel performance in an engine using steady-state combustion (e.g., gas turbine). There is a rough inverse relationship between Octane Number and Cetane Number, which makes high octane fuels miserable fuels for compression ignition engines.

Cetane Number

- The higher the Cetane Number, the less the ignition delay in a compression ignition engine. Currently, #2 diesel fuels in the U.S. average 48 Cetane Number. A minimum Cetane Number of 40 is allowed by some diesel engine manufacturers. Lower Cetane Numbers may be used in heavy, slow-speed engines, particularly if auxiliary means of ignition is employed (e.g., spark or glow plug, or pilot fuel injection). It will be noted that spontaneous ignition temperature tends to decrease as Cetane Number increases.

  Cetane Number has no significance regarding fuel performance in a continuous combustion engine.

Flame Speed

- Current engines have been optimized to operate best with a hydrocarbon fuel (flame speed 1.1 ft/sec). Wide variations in flame speed from this level would probably require that engine operation be modified for best results. For example, the high flame speed of hydrogen and the slow speed of ammonia suggest that expedients

must probably be used with these fuels for best operation in reciprocating engines. In continuous combustion engines, combustor residence time (e.g., combustor size) for the fuel air mixture must be increased as flame speed decreases to ensure complete combustion.

Flammability Limits

- Represent the range in fuel-air mixtures that will support a flame. In general, wide limits are an advantage in engine operation, since the probability of misfire due to engine variability and heterogeneity of the fuel-air mixture is reduced. It will also allow greater flexibility in design of continuous combustors.

Kinematic Viscosity @ 77°F

- This property is primarily of concern where fuel injection and atomization is used to introduce the fuel into the combustion space. For pressure injection, the degree of atomization becomes poorer as viscosity increases. It is of particular concern in diesel engines where the degree of spray penetration is important.

Kinematic Viscosity at 0°F

- This property is important in giving guidance as to low temperature handling properties. Pumping difficulties increase as viscosity increases.

Density

- The density of the liquid is of concern with regard to the size of storage vessels and lines in terminals, service stations, and vehicles. In general, the less dense fuel will require a greater storage volume for a given energy supply, unless the heat content (BTU/lb) compensates for the density difference.

  Density is also of importance in fuel systems where the fuel is metered by volume (e.g., in diesel fuel injectors). In such a system, the more dense fuel will be supplied at a higher mass rate, which will influence fuel/air ratios, and power at a given injector setting.

Freezing Point (Pour Point)

- Represents the temperature below which the fuel becomes solid and cannot be pumped. This limits the minimum temperature at which the oil can be handled either at the terminal or aboard a vehicle.

Flash Point

- The temperature at which the bulk liquid can be ignited by an open flame. Fire hazard increases as flash point decreases.

Solubility in Water

- All current petroleum fuels are exposed to contact with considerable water in storage and handling, unless special, expensive precautions are taken. Fuel losses to the water phase are thus possible if fuel solubility in water is appreciable.

Solubility for Water

- In view of the fact that it is difficult to avoid contact of fuel with water in the normal commercial storage and handling system, commercial fuels have ample opportunity to pick up water. The water can be precipitated when the fuel is cooled. Thus, water can be deposited in sensitive areas of the fuel system (filters, nozzles, controls). This problem would be expected to become more severe as the solubility of water in the fuel increases.

Emulsion Tendency

- This is the tendency for a fuel to form an emulsion when agitated with water. The greater this tendency, the greater the probability that emulsified water picked up in the fuel transportation and storage system will be carried from the storage tanks, through the fuel system, and, eventually, to the engine where it can cause engine malfunction by interfering with the smooth flow of fuel to the engine. The trouble in the engine may be caused by the poor flow characteristics of the emulsion itself, by deposit of water when the emulsion breaks, by corrosive salts dissolved in the water (e.g., sea water) or by dirt and rust suspended in the emulsion. Thus, a fuel with low tendency to emulsify or in which the emulsion breaks and settles rapidly is much easier to deliver clean to the engine than a fuel that emulsifies easily.

Storage Stability

- In the present fuel distribution system it is possible that six months or more may elapse between the time a fuel is produced at a refinery until it is burned in an engine. Thus, it is important that a fuel have the ability to retain its desirable characteristics and not degrade in storage over this period. Storage instability may take a number of forms, e.g., loss of volatile fuel components, formation of gum or sediment, change in color, etc.

Static Charge

- A static electric charge can be accumulated on a liquid of low electric conductivity (e.g., a petroleum fuel) when it is moved at high velocity through pipes, filters, etc. Under proper conditions the electric charge will discharge to a conductor of lower potential (e.g., a grounded tank wall) in the form of a spark capable of igniting a combustible mixture of fuel vapor and air. Thus the tendency to develop a static charge (which is roughly an inverse function of its electrical conductivity) is of interest as one source of fire hazard in the handling of fuels.

Toxicity

- The toxicity of a fuel is of great concern and determines the precautions that must be taken in its safe handling and use. Three main types of toxicity are of interest: vapor inhalation, ingestion and skin contact. Vapor toxicity determines the care that must be taken to avoid breathing the fumes. Ingestion indicates the hazard in case of accidental swallowing of the vapor or liquid. Skin toxicity represents the hazard connected with fuel coming in contact with skin.

Lubricity

- Lubricity is the ability of a fuel to lubricate the equipment through which it flows. It is proportional to viscosity. The lubricity of the fuel can have an important effect on the type of pump used in handling. With some pumps a fuel of poor lubricity can cause excessive wear (e.g., using a diesel fuel having an undesirably low viscosity). Accordingly, care must be used in correctly matching fuel and pump. In some cases, poor lubricity may be corrected by means of a fuel additive.

Corrosivity

- A reaction (chemical, dissolution, etc.) between a fuel and the materials of the fuel system in which it is used is, of course, undesirable. It may cause engine malfunction due to formation of fuel leaks, distortion of fuel system components, development of undesirable deposits in sensitive areas, staining and coating of finely finished surfaces in controls, pumps, etc. Thus it is important that a fuel be compatible with the fuel system in which it is used. The degree of compatibility must be high since the expected service life is long (10+ yrs.) and relative small changes in sensitive parts (e.g., in metering devices) can be very troublesome.

Effect on Plastics

- In most engine fuel systems, plastic parts may be found perhaps as lines, diaphrams, gaskets, control parts, etc. It is important that the fuel be compatible with such materials and not cause them to lose strength, swell or otherwise deteriorate.

APPENDIX 7

BASES FOR CAPITAL RECOVERY

20 year project life

16 year depreciation

Investment Schedule

Year-2	15%
Year-1	45%
Year 0	30%
Year 1	10%

Working capital - 45 days product inventory, 30 days raw materials

Startup expense 5% on investment

Working capital expensed in year 0 and recovered in year 20

Startup expense as follows: 2% in year -1, 90% in year 0, 8% in year 1

Production Schedule

Year 1	50%
Year 2	87.5%
Years 3-20	100%

Income tax rate - 50%

Definition of Investors Rate of Return (Discounted Cash Flow Return)

Investors rate of return is the maximum interest rate which can be paid on money borrowed to finance a project when the project is the only source of income to the investor.

APPENDIX 7

TABLE 1

SAMPLE DCF CALCULATION(1) - 100 MM$ INVESTMENT, 10% NET RETURN

Year End	(A) Revenue Minus Cost	(B) Depreciation	(C) Taxable Income (A)-(B)	(D) Net A/T Income (A)-50%(C)	(E) Investment	(F) Working Capital	(G) Cash Flow (D)-(E)-(F)	(H) Discount Factor	(I) Discounted Cash Flow (G)x(H)
-2		-			15,000		(15,000)	1.21	(18,150)
-1	(100) (2)	-	(100)	(50)	45,000		(45,000)	1.10	(49,500)
0	(4,500) (2)	-	(4,500)	(2,250)	30,000	7,400	(39,600)	1.0	(39,600)
1	10,350 (2)	11,800	(1,450)	11,100	10,000		1,100	0.909	1,000
2	18,800	11,000	7,800	14,900			14,900	0.826	12,300
3	21,500	10,300	11,200	15,900			15,900	0.751	11,900
4	21,500	9,600	11,900	15,500			15,500	0.683	10,600
5	21,500	8,800	12,700	15,100			15,100	0.621	9,400
6	21,500	8,100	13,400	14,800			14,800	0.564	8,300
7	21,500	7,400	14,100	14,500			14,500	0.513	7,440
8	21,500	6,600	14,900	14,100			14,100	0.467	6,600
9	21,500	5,900	15,600	13,700			13,700	0.424	5,810
10	21,500	5,100	16,400	13,300			13,300	0.386	5,130
11	21,500	4,400	17,100	12,900			12,900	0.350	4,520
12	21,500	3,700	17,800	12,600			12,600	0.319	4,020
13	21,500	2,900	18,600	12,200			12,200	0.290	3,540
14	21,500	2,200	19,300	11,800			11,800	0.263	3,100
15	21,500	1,500	20,000	11,500			11,500	0.239	2,750
16	21,500	700	20,800	11,100			11,100	0.218	2,420
17	21,500	0	21,500	10,800			10,800	0.198	2,140
18	21,500	0	21,500	10,700			10,700	0.180	1,930
19	21,500	0	21,500	10,800			10,800	0.164	1,770
20	21,500	0	21,500	10,700		(7,400)	18,100	0.149	2,700
Totals		100,000			100,000	0			120

Notes:

(1) Units - thousand dollars/year.

(2) Includes startup costs:

Year 1	100 M$	
0	4500	
+1	400	
Total	5000	

(3) Assumed to be 7.4% of investment.

EPA-460/3-74-009

APPENDIX 7

TABLE 2

EFFECT OF VARIOUS FACTORS ON CAPITAL RECOVERY

Case	A	B	C	D	E	F
Project Life, Years	16	16	20	20	20	20
Depreciation Period, Years	16	16	16	16	16	16
Depreciation Type*	SL	SYD	SYD	SYD	SYD	SYD
Working Capital, % on Inv.	0	0	0	0	7.5	7.5
Startup Cost, % on Inv.	0	0	0	0	0	5
Production Rate, %						
Year 1	100	100	100	100	100	50
Year 2	100	100	100	100	100	87.5
Year 3 to End	100	100	100	100	100	100
Investment Schedule % in Year						
-2	0	0	0	15	15	15
-1	0	0	0	45	45	45
0	100	100	100	30	30	30
+1	0	0	0	10	10	10
Capital Recovery Factor	0.193	0.179	0.164	0.181	0.196	0.215

* Code: SL - Straight Line Depreciation
SYD - Sum of Yearly Digits

SL: $$\text{Annual Cost} = \frac{1}{\text{Depreciation Life}}$$

SYD: $$\text{Annual Cost} = \frac{n}{1 + 2 + 3 + \ldots n} \quad \text{for Year 1}$$

$$\frac{n - 1}{1 + 2 + 3 + \ldots n} \quad \text{for Year 2}$$

to $$\frac{1}{1 + 2 + 3 + \ldots n} \quad \text{for Year n}$$

EPA-460/3-74-009

Investment Buildup

(1) Direct M&L (Materials & Labor)

Onsites
Offsites

(2) Field Labor Overhead and Burden

(3) Engineers and Contractors Fees

(4) Project Contingency - 15% of (1-3) + process contingency when processing not well defined

(5) Escalation: Cost increase due to inflation: not considered when economics are calculated on basis of constant dollars

TOTAL INVESTMENT: 1-5

Operating Costs

(1) Capital Charges (see information on Capital Recovery)

(2) Repair Material - 2-5% of investment

(3) Supplies, Taxes, etc. - 4% of investment

(4) Manning @ $ X /men/yr.

(5) Utilities
(6) Fuels
(7) Catalyst
(8) Chemicals
(9) Licenses

} other items included in operating costs

TOTAL OPERATING COSTS: 1-9

Bases for Economic Calculations
for Shale Syncrude

3 Year Construction Period
20 Year Operating Period
10 Year Life on Mining Investment - Initial and Deferred
10 Year Life on Crushing Investment - Initial and Deferred
10 Year Life on Ash Disposal Investment - Initial and Deferred
20 Year Life on Retort Investment - 16 Yr. Depreciation
20 Year Life on Water Investment - 16 Yr. Depreciation

Initial Capital Distribution (percentages)

Yr.	-2	-1	0	+1
Mining	20	30	50	
Water Supply	50	50		
Retorting	10	45	45	
Refining	10	45	45	
Working			50	50
Preproduction Expense				
Start-up			65	35
Mine Development		50	50	
Management	33	33	34	

2% Salvage Value on Investment
Working Capital Recovered in
20th Year

Royalty on 35 gpt shale 17¢/ton included in mining operating cost

No tax on preferences included

APPENDIX 8

REFINING OF SHALE AND COAL SYNCRUDE

A study was carried out on the economics of refining shale and coal syncrude to give gasoline and distillate products. The properties of the syncrude are given in the attached Table 1, which recaps information given in Sections 5.1 and 5.2. A number of comments should be made about the properties of these syncrudes, which affect the refining sequence:

1. Neither syncrude contains any "bottoms" (material boiling above 850-950°F) so that there is no need to provide for bottoms conversion processes.

2. Both syncrudes are very low in sulfur and nitrogen, which reduces the requirements for subsequent hydrotreating.

3. Shale syncrude has a higher H/C ratio than coal syncrude. Therefore, it requires less hydrogen in the refining step. The higher H/C ratio also is reflected in the lighter yield structure of shale syncrude.

4. The higher aromatics content of coal vs. shale syncrude suggest the use of hydrocracking rather than catalytic cracking in the conversion step.

Study Bases

The following bases were used:

1. 100 MB/SD refinery, located on the U.S. Gulf Coast.

2. Refinery produces automotive gasoline (mogas) and distillate.

3. Where no other information was available, it was assumed that the syncrudes can be processed similarly to petroleum crudes.

4. Information on coal syncrude refining was based on the study done by Hydrocarbon Research, Inc. for the office of Coal Research. (1)(2)

5. Information on shale syncrude refining was based both on the literature (3) and on the contractor's experience in petroleum refining.

6. All other bases were the same as those used throughout the study, e.g., 10% DCF, 1973 $, etc.

Description of Cases

The processing scheme for refining coal syncrude to gasoline and distillate is shown on Figure 1 (Case 1). The syncrude is received via pipeline into crude storage. It is then fractionated in an atmospheric pipestall (APS) and crude light ends unit. The light naphtha is blended directly into the mogas pool without further treatment. The heavy naphtha is hydrotreated and fed to the reformer.

The middle distillate sidestream is hydrotreated at severe conditions. Part of the hydrotreated distillate is taken off as distillate product. The remaining portion is hydrocracked to naphtha. This naphtha is then reformed along with the heavy naphtha from the naphtha hydrotreater and the entire reformate stream is blended into mogas. The butanes and light naphtha made in the hydrocracking and reforming processes are blended directly into the mogas pool.

A small stream of bottoms taken off the pipestill is referred to as furnace oil. For the purposes of this study, this furnace oil is assumed to be a product. However, it can also be used as refinery fuel, as can the refinery gases which are made in the processes. Both refinery gases and furnace oil are assumed as products in order to keep the refinery fuel basis consistent from case to case. The basis used was to purchase all the refinery fuel required at the cost of syncrude. This is dealt with in more detail in the discussion of operating costs.

The hydrogen for the hydrotreating and hydrocracking is supplied by the reformer and from the steam reforming of naphtha. Both sulfur and ammonia are recovered as byproducts in this process scheme.

The case for making all mogas from coal syncrude is shown on Figure 2 (Case 2). In this case, all of the middle distillate is hydrocracked to naphtha and reformed. Aside from unit size differences, there are no basic process differences between Cases 1 and 2.

The processing scheme for the base case for refining shale syncrude to mogas and distillate is shown on Figure 3 (Case 3). As in the coal refinery, the syncrude is received via pipeline into crude storage. It is then fractionated in an APS and light ends unit. The shale syncrude, unlike the coal syncrude, contains butanes. These are blended directly into the mogas pool, with the excess being sent to refinery gases. The amount of butanes in the mogas pool is set by the Reid Vapor Pressure specification. The light naphtha from the pipestill

is blended directly into the mogas pool. The heavy naphtha is hydrotreated and reformed to increase its octane. The 375/430°F cut is blended directly into the mogas pool.

The 430/550°F cut taken off the APS is sent directly to distillate product storage. The 550+°F stream from the pipestill is hydrocracked to naphtha. The heavy naphtha made in the hydrocracker is reformed along with the heavy naphtha from the hydrotreater in a cyclic reformer. The reformate is blended into the mogas pool. The butanes and light naphtha made in the hydrocracking and reforming steps are sent to refinery gases and blended into the mogas pool respectively.

The hydrogen for the hydrotreating and hydrocracking is supplied from the reformer. To achieve the necessary hydrogen purity, a cryogenic hydrogen recovery unit is needed.

The shale case making all mogas is shown on Figure 4 (Case 4). In this case, all of the 430+°F material is hydrocracked to naphtha and reformed to make mogas. Since more high octane reformate is being blended into mogas, a semi-regenerative reformer can be used rather than a cyclic unit as in Case 3. However, the hydrogen requirements are not met by the reformer gases, so a hydrogen plant is needed. As with the coal cases, the hydrogen is produced by the steam reforming of naphtha.

An alternative to Case 4 replaces the hydrocracker with a catalytic cracker. This is shown in Figure 5 (Case 5). To meet octane specs, a cyclic reformer is needed, as well as an alkylation plant and a polymerization plant. The effects of these changes relative to the base case are discussed below.

Product Yields and Qualities

The product slates for the four base cases mentioned above are shown below.

	Coal		Shale	
Case	1	2	3	4
Mogas				
MB/SD	66.1	101.3	66.9	93.7
RON Clear	—— 92 ——		—— 91 ——	
RVP, psi	—— 9.5 ——		—— 10.5 ——	
Distillate				
MB/SD	33.3	--	27.5	--
Cetane Index*	35-38	--	49	--

* Cetane Index: calculated from a correlation of °API gravity and mid-boiling point, based on many petroleum fractions; correlates well with cetane number as determined in single-cylinder engines.

Since the shale syncrude has a lighter yield structure, and includes butanes, it tends to produce less liquid product per barrel of syncrude than coal. Therefore, while more gaseous products are made, the lighter yield structure requires less conversion to make the mogas product. In addition, since the butanes require no additional processing to be blended into mogas, the average cost of refining per barrel is lowered.

The gasoline octane and Reid vapor pressure specification were set at a minimum of 91 RON Clear and a maximum of 10.5 psi, respectively. Actual performance characteristics of these gasolines would have to be established to set product quality requirements.

The Cetane Index of the coal distillate is too low for use as an automotive diesel fuel, whereas the shale distillate has an acceptable Cetane Index. As discussed in Section 6, there are a number of options for dealing with this situation (assuming that engine tests on coal distillates confirm the Cetane Index prediction):

(1) hydrogenation (or hydrocracking) to increase cetane number: this is fairly expensive (ca. $3/Bbl or $0.50/MMBTU) and results in a loss of distillate yield. It is the least desirable alternative.

(2) use of cetane improvers such as amyl nitrate: a question of economics.

(3) blending of coal distillate with shale or petroleum fractions to achieve higher cetane number: the most desirable alternative.

More generally, the coal distillate is expected to be quite satisfactory for uses other than diesel fuel.

Investments

As mentioned previously, all investments presented in this study are for a 1973, U.S. Gulf Coast location. The refineries were sized for 100 MB/SD of syncrude feed.

The investments for the four base cases are shown as follows:

Case:	MM$ (1973) Coal 1	Coal 2	Shale 3	Shale 4
Onsites				
APS + Light Ends	11.0	11.1	11.7	11.7
Hydrocracker	32.3	47.0	19.2	33.6
Naphtha Treating & Reforming	22.3	29.2	22.9	22.3
Hydrogen Plant	42.0	52.1	6.0	22.1
Sulfur + Ammonia Recovery	2.0	2.0	-----	-----
• Onsites Total	109.6	141.4	59.8	89.7
Offsites				
Utilities	30.1	37.9	23.5	29.4
Tankage	14.7	15.1	14.7	15.2
Offsites	37.7	41.0	34.5	37.7
• Offsites Total	82.5	94.0	72.7	82.3
• Total Investment	192.1	235.4	132.5	172.0

A complete breakdown of the investments is given in Table 2.

The utilities were based on information from the previously mentioned reference studies. The unit investments were developed using historical data and Company experience in this area. Contingencies and allowances have been added as is usual in estimates of this type for petroleum refineries. The utilities investments cover steam generation, power distribution, cooling water system, and the miscellaneous utilities associated with a refinery.

The offsites facilities were developed based on historical experience with petroleum refining. The offsites were based on a pipeline refinery where the syncrude is fed to the refinery via pipeline and the products are removed from the refinery via pipeline. Therefore, no marine or truck facilities are needed for crude or product loading. Included in the offsites is the site preparation needed based on a flat, dry site. Difficult sites that require extensive preparation would cost significantly more. Also, this cost does not include the cost of the land for the refinery.

The waste treatment facilities are for a refinery located in a "restrictive area" typical of the U.S., Japan and most of Europe. Areas with more stringent requirements will also add to the investments shown. The general offsites include safety facilities, fire protection, chemicals handling, buildings, and other miscellaneous facilities typical of a petroleum refinery. The tankage investment includes the cost of ten days crude tankage, any necessary intermediate tankage, and thirty-five days product tankage.

Annual Costs

The annual costs for the four base cases are shown below and are given in detail in Table 3.

	MM$/Yr. (1973)			
	Coal		Shale	
Case:	1	2	3	4
Catalyst + Chemicals	4.0	6.4	3.7	6.4
Electric Power (Fixed costs @ 0.7 ¢/KWH)	4.1	4.8	2.9	4.1
Investment Related	16.5	20.2	11.3	14.8
Return on Investment	41.3	50.6	28.3	37.0
• Cost of Refining, ex Fuel				
MM$/Yr.	65.9	82.0	46.2	62.3
$/Bbl Syncrude	2.0	2.5	1.4	1.9
Refinery Fuel	20.6	30.6	16.4	24.0
Fuel for Electric Power (@ 10^4 BTU/KWH elec.)	7.8	9.0	5.6	7.7
H_2 Plant Feed & Fuel	20.6	29.6	--	10.8
MM$/Yr.	49.0	69.2	22.0	42.5
$/Bbl Syncrude	1.5	2.1	0.7	1.3
• Total Cost of Refining				
MM$/Yr.	114.9	151.2	68.2	104.8
$/Bbl Syncrude	3.5	4.6	2.1	3.2

The catalyst and chemicals costs were estimated from the studies mentioned, and adjusted to reflect 1973 costs. The annual cost for purchased electric power was split into fixed costs, at 0.7¢/KWH, and fuel costs, at 10,000 BTU/KWH. The electric loads were estimated from the studies. Investment related costs, which include supplies, manning, taxes and repair material, were estimated as 8.6% of investment per year based on historical experience. Return on investment is based on a 10% DCF return assuming a project life of 20 years with 16 years sum of the years' digits depreciation schedule. A 50% combined federal and state tax rate was also assumed. A sensitivity to rate of return is discussed in a subsequent section.

Refinery fuel includes fuels for process use as well as that required for steam generation. The process fuel requirement was determined from the original studies. Fuel for steam generation was estimated from the steam load using 0.2 FOEB* per thousand pounds of steam

---

* Fuel oil equivalent barrels: 6.05 MMBTU lower heating value.

generated as the conversion factor. The fuel cost for purchased electric power was separated from the fixed costs because electric power is a major cost, which is extremely sensitive to fuel value. The feed and fuel for the hydrogen plant is purchased.

The cost of fuel for the above requirements was assumed to be 8$/Bbl for all of the cases. This is the approximate value for coal syncrude. A sensitivity to fuel value was also developed since fuel is a major component in the overall refining cost. This sensitivity is discussed in the following section. In addition, no premium over refinery fuel was assumed for the cost of the naphtha feed and fuel to the hydrogen plant. Any premium would substantially increase the cost of refining coal syncrude relative to the cost of refining shale syncrude.

For consistency, no fuel credit was taken for refinery gases or furnace oil produced in any of the cases. All refinery fuel was purchased and refinery gas and furnace oil considered product. While these streams might be burned as refinery fuel in actual operation, the decrease in product volume would have to be compensated for by an increase in syncrude throughput. By tying the refinery fuel cost to syncrude cost, this interaction is accounted for without any undue bias for any one case.

Sensitivities

In order to reflect the possibility of bases different than those used in this study, sensitivities were developed on critical items. The first sensitivity reflects the utilization of catalytic cracking instead of hydrocracking when refining shale syncrude. The running plan for this process sequence is shown on Figure 5. The cost of refining for this case is 2.50$/Bbl, which is 0.70$/Bbl less than the cost of the comparable hydrocracking case making all mogas (Case 4).

The primary area of economy of catalytic cracking versus hydrocracking is in fuel requirements. The refinery fuel requirement is substantially lower because the catalytic cracker requires little imported fuel, exports steam from the CO boiler, and requires a smaller catalytic reformer. In addition, the catalytic cracking case doesn't require hydrogen. This results in the complete savings of the cost of purchased naphtha. There is also a slight savings in overall investment, in part due to the elimination of the hydrogen plant.

One offsetting debit for catalytic cracking is the need to purchase butanes to meet the RVP specification in the mogas pool. Another debit, which is not really reflected in an analysis of this type, is the yield loss associated with catalytic cracking. Although catalytic cracking does require less "imported" fuel, the heat required in the cracker is supplied by burning carbon deposited on the catalyst. This results in less product make as can be seen from Figures 4 and 5. The absolute delta for catalytic cracking would depend on the product

pricing structure as well as the value of refinery fuel. Since, for the purposes of this study, the syncrude feed was held constant, the effect of the yield differences was not accounted for. It should be noted, however, that this yield loss could possibly offset the processing cost advantage that is shown for catalytic cracking.

A cat cracking alternative was not developed for coal syncrude since it seems that the high polyaromatic content would necessitate the use of hydrocracking as the conversion process.

A second sensitivity was developed to reflect the possible variation in fuel price. It was assumed that fuel price would be directly related to syncrude price. This is realistic in that any product being burned as refinery fuel is in effect being purchased at syncrude prices. Therefore, to reflect the uncertainty in syncrude prices, and thus the uncertainty in fuel price, a change in fuel price of 2$/Bbl was examined. The effect of this change on overall costs ranges from 20-40 ¢/Bbl for shale to 40-60 ¢/Bbl for coal.

The third sensitivity reflects the possible differences in financial criteria expressed as rate of return on investment. The cost of refining was developed for 5, 10, and 15% DCF rates of return, with 10% being the base case.

The detailed breakdown of the investments and annual costs for the base cases and the sensitivities to the base cases can be found in Tables 2 and 3.

APPENDIX 8

TABLE 1

	Coal Syncrude	Shale Syncrude
• Whole Crude		
Gravity, °API	32.4	34
Sulfur, Wt. %	0.1	0.005
Nitrogen, Wt. %	0.1	0.035
C/H Ratio, Wt. %	~7.3-8.5	~6.2-6.4
• Butanes, LV %	--	9.0
• Naphtha, Cut °FVT	C_5/375	C_5/350
Yield, LV %	40.0	27.5
Gravity, °API	53.0	54.5
Sulfur, Wt. %	0.1	<0.0001
Nitrogen, Wt. %	0.1	0.0001
Aromatics, LV %	--	18
Naphthenes, LV %	--	37
Paraffins, LV %	--	45
• Middle Distillate, Cut °FVT	375/650	350/550
Yield, LV %	54.2	41.0
Gravity, °API	23.2	38.3
Sulfur, Wt. %	0.1	0.0008
Nitrogen, Wt. %	0.1	0.0075
• Heavy Distillate, Cut °FVT	650/975	550/850
Yield, LV %	5.8	22.5
Gravity, °API	3.5	33.1
Sulfur, Wt. %	0.3	<0.01
Nitrogen, Wt. %	0.1	0.12
• Resid, °FVT	975+	850+
Yield, LV %	--	--
Sulfur, Wt. %	--	--
Nitrogen, Wt. %	--	--

-- means data not applicable.

Data previously cited in Section 5.1.

EPA-460/3-74-009

APPENDIX 8

TABLE 2

ALTERNATIVE FUELS STUDY
REFINING SYNCRUDE
INVESTMENT SUMMARY (1973$, BAYTOWN)

	Coal				Shale					
	Case 1 (Mogas/Dist)		Case 2 (All Mogas)		Case 3 (Mogas/Dist)		Case 4 (All Mogas)		Case 5 - Cat Cracking (All Mogas)	
• ONSITES	(/SD)	MM$	(/SD)	MM$	(/SD)	MM$	(/SD)	MM$	(/SD)	MM$
+ APS + Light Ends	100 MB	11.0	100 MB	11.1	100 MB	11.7	100 MB	11.7	100 MB	12.3
+ Hydrocracker (R1+R2)	(53 + 28) MB	32.3	61 MB	47.0	22.5 MB	19.2	50 MB	33.6	-	-
+ Cat Cracker										
Polymerization	-	-	-	-	-	-	-	-	50 MB	55.0
Alkylation										
+ Naphtha Treat + Reforming	51 MB(1)	22.3	76 MB(1)	29.2	37 MB(2)	22.9	59 MB(1)	22.3	19 MB(2)	12.2
+ H_2 Manufacture	100 MMSCF(3)(5)	42.0	144 MMSCF(3)(5)	52.1	46 MMSCF(4)	6.0	53 MMSCF(3)	22.1	-	-
+ Sulfur + Ammonia Recovery	31 LT	2.0	31 LT	2.0	-	-	-	-	-	-
• ONSITES TOTAL, MM$		109.6		141.4		59.8		89.7		79.5
• OFFSITES										
+ Utilities(6)										
Steam (10.9 $/Mlb/hr)	(640 Mlb/hr)	4.6	(930 Mlb/hr)	6.7	(555 Mlb/hr)	4.2	(675 Mlb/hr)	4.9	(435 Mlb/hr)	3.2
Power (204 $/KW)	(79 MKW)	16.1	(93 MKW)	19.0	(66 MKW)	13.5	(78 MKW)	15.8	(82 MKW)	16.7
Cooling Water (54.4 $/GPM)	(80 MGPM)	4.4	(110 MGPM)	5.9	(37 MGPM)	2.2	(69 MGPM)	3.8	(46 MGPM)	2.6
Other (20% of above)		5.0		6.3		3.7		4.9		4.5
Total Utilities		30.1		37.9		23.5		29.4		27.0
+ Tankage		14.7		15.1		14.7		15.2		17.2
+ General Offsites										
- Waste Treatment		11.9		12.5		11.3		11.9		12.2
- Site Prep		5.8		6.4		5.2		5.8		6.2
- Blending + Loading		14.0		15.7		11.9		14.0		14.9
- Gen'l Offsites		6.0		6.4		6.1		6.0		6.2
		37.7		41.0		34.5		37.7		39.5
• OFFSITES TOTAL, MM$		82.5		94.0		72.7		82.3		83.7
• TOTAL INVESTMENT, MM$		192.1		235.4		132.5		172.0		163.2

Notes:

(1) Semi-regen Reformer
(2) Cyclic Reformer
(3) Steam Reforming H_2 Manufacture
(4) Cryogenic H_2 Recovery
(5) Two Trains @ 50% each
(6) Invested capacities

EPA-460/3-74-009

APPENDIX 8

TABLE 3

ALTERNATIVE FUELS STUDY
REFINING SYNCRUDE
ANNUAL COST SUMMARY

1973 MM$/Year

	Coal												Shale																	
	Case 1 (Mogas/Dist)						Case 2 (All Mogas)						Case 3 (Mogas/Dist) (Hydrocracking)						Case 4 (All Mogas) (Hydrocracking)						Case 5 (All Mogas) (Catalytic Cracking)					
• Annual Costs, MM$/Year																														
+ Catalyst + Chemicals			4.0						6.4						3.7						6.4						4.2			
+ Electric Power (0.7 c/KWH ex Fuel)			4.1						4.8						3.4						4.1						4.2			
+ Investment Related			16.5						20.2						11.4						14.8						14.0			
+ Return on Investment, % DCF	5		10		15		5		10		15		5		10		15		5		10		15		5		10		15	
	23.4		41.3		63.7		28.7		50.6		78.1		16.2		28.5		44.0		21.0		37.0		57.1		19.9		35.1		54.2	
• Cost of Refining (ex Fuel)																														
MM$/Year	48.0		65.9		88.3		60.1		82.0		109.5		34.7		47.0		62.5		46.3		62.3		82.4		42.3		57.5		76.6	
$/Bbl Syncrude	1.5		2.0		2.7		1.8		2.5		3.3		1.1		1.4		1.9		1.4		1.9		2.5		1.3		1.8		2.3	
• Refinery Fuel Costs,(1) MM$/Yr	6$/Bbl	8/$B	6$/B	8$/B	6$/B	8$/B	6$/B	8$/B	6$/B	8$/B	6$/B	8$/B	6$/B	8$/B	6$/B	8$/B	6$/B	8$/B	6$/B	8$/B	6$/B	8$/B	6$/B	8$/B	6$/B	8$/B	6$/B	8$/B	6$/B	8$/B
+ Refinery Fuel(2)	15.4	20.6	15.4	20.6	15.4	20.6	22.7	30.6	22.7	30.6	22.7	30.6	12.3	16.4	12.3	16.4	12.3	16.4	18.0	24.0	18.0	24.0	18.0	24.0	7.9	10.6	7.9	10.6	7.9	10.6
+ Electric Power Fuel $\left(.00165 \frac{FOE}{KWH}\right)$	5.9	7.8	5.9	7.8	5.9	7.8	6.8	9.0	6.8	9.0	6.8	9.0	4.2	5.6	4.2	5.6	4.2	5.6	5.8	7.7	5.8	7.7	5.8	7.7	6.0	8.0	6.0	8.0	6.0	8.0
+ H_2 Plant Feed Fuel	15.4	20.6	15.4	20.6	15.4	20.6	22.2	29.6	22.2	29.6	22.2	29.6	-	-	-	-	-	-	8.1	10.8	8.1	10.8	8.1	10.8	-	-	-	-	-	-
+ Purchased Butanes(3)	-	-	-	-	-	-	-	-	-	-	-	-	-	-	-	-	-	-	-	-	-	-	-	-	5.0	6.7	5.0	6.7	5.0	6.7
• Annual Cost of Fuel																														
MM$/Yr	36.7	49.0	36.7	49.0	36.7	49.0	51.7	69.2	51.7	69.2	51.7	69.2	16.5	22.0	16.5	22.0	16.5	22.0	31.9	42.5	31.9	42.5	31.9	42.5	18.9	25.3	18.9	25.3	18.9	25.3
$/Bbl Syncrude	1.1	1.5	1.1	1.5	1.1	1.5	1.6	2.1	1.6	2.1	1.6	2.1	0.5	0.7	0.5	0.7	0.5	0.7	1.0	1.3	1.0	1.3	1.0	1.3	0.6	0.8	0.6	0.8	0.6	0.8
• Total Cost of Refining																														
MM$/Yr	84.7	97.0	102.6	114.9	125.0	137.3	111.8	129.3	133.7	151.2	161.2	178.7	50.4	55.9	62.7	68.2	78.0	84.5	78.2	88.8	94.2	104.8	114.3	124.9	61.2	67.6	76.4	82.8	95.5	101.9
$/Bbl Syncrude	2.6	2.9	3.1	3.5	3.8	4.2	3.4	3.9	4.1	4.6	4.9	5.4	1.5	1.7	1.9	2.1	2.4	2.6	2.4	2.7	2.9	3.2	3.5	3.8	1.9	2.0	2.3	2.5	2.9	3.1

Notes:

(1) Assumes BBL = FOEB
(2) No credit for refinery gases
(3) Butane at $\frac{6\$/B}{.664}$ = 9$/FOEB and $\frac{8\$/B}{.664}$ = 12$/FOEB

EPA-460/3-74-009

APPENDIX 8

FIGURE I

ALTERNATE FUELS STUDY
REFINING SYNCRUDE
COAL - CASE 1 - MOGAS/DIST

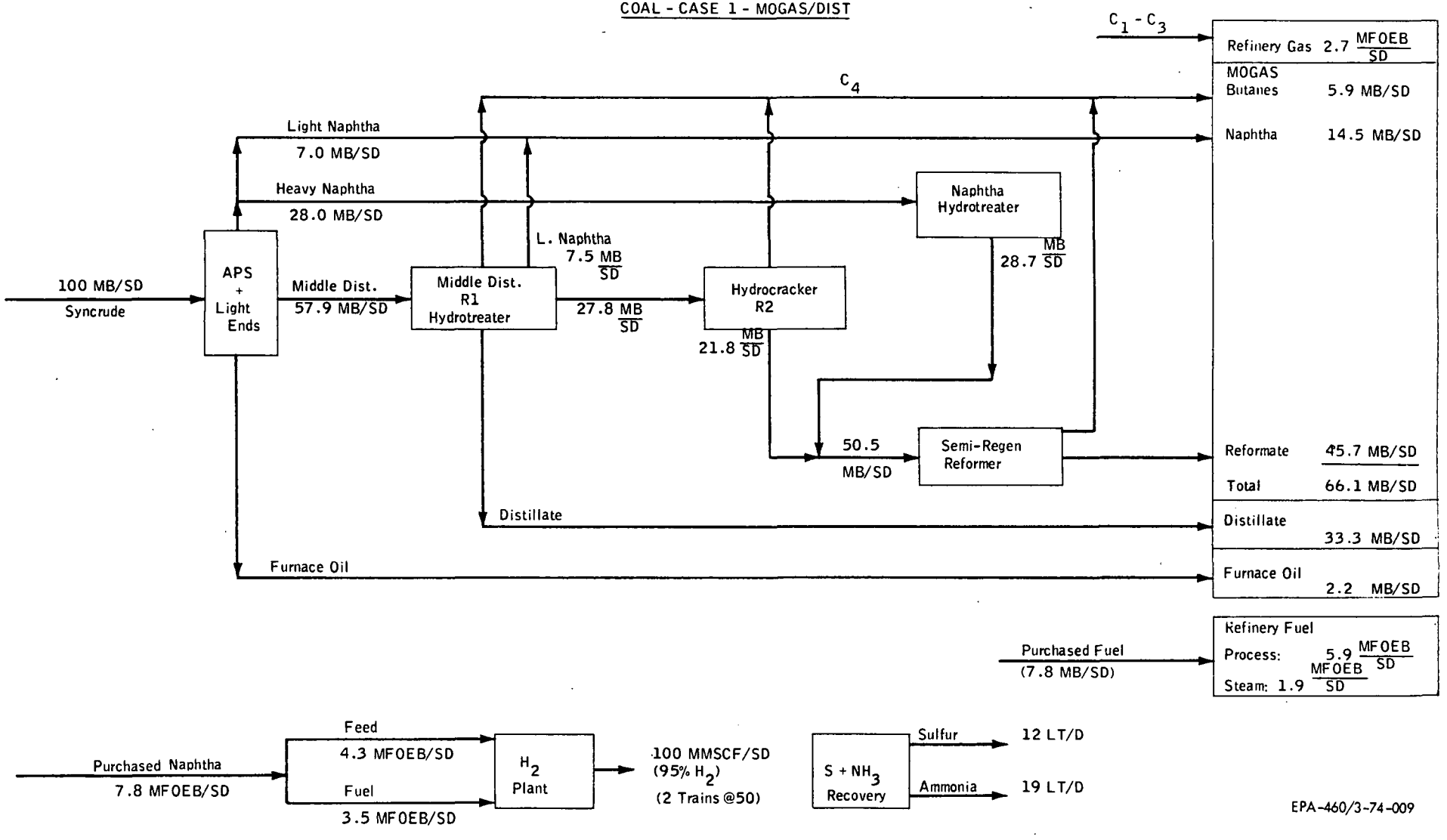

EPA-460/3-74-009

APPENDIX 8

FIGURE 2

ALTERNATE FUELS STUDY
REFINING SYNCRUDE
COAL - CASE 2 - ALL MOGAS

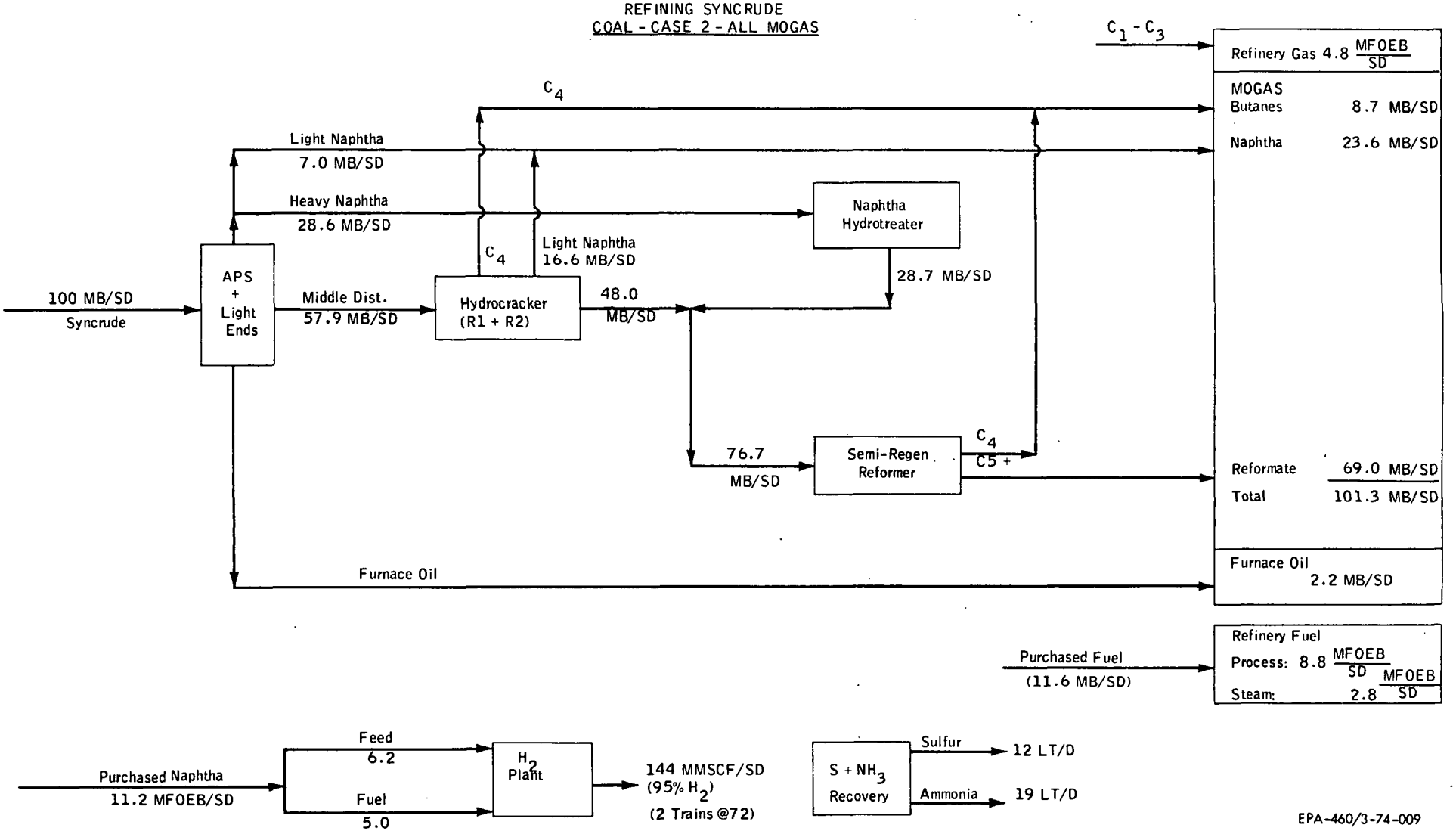

EPA-460/3-74-009

APPENDIX 8

FIGURE 3

ALTERNATE FUELS STUDY
REFINING SYNCRUDE
SHALE - CASE 3 - MOGAS/DISTILLATE

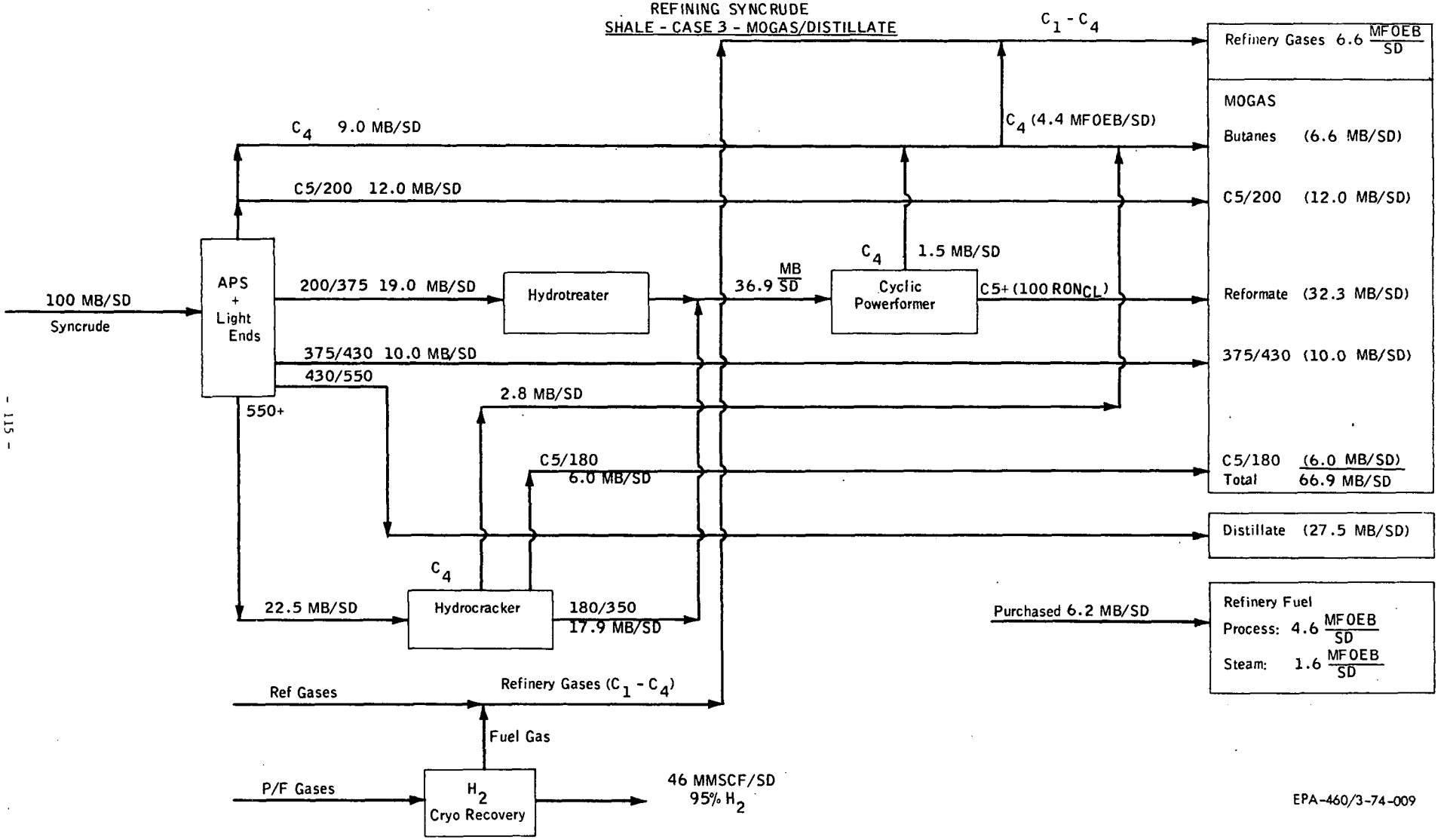

EPA-460/3-74-009

APPENDIX 8

FIGURE 4

ALTERNATE FUELS STUDY
REFINING SYNCRUDE
SHALE - CASE 4 - ALL MOGAS

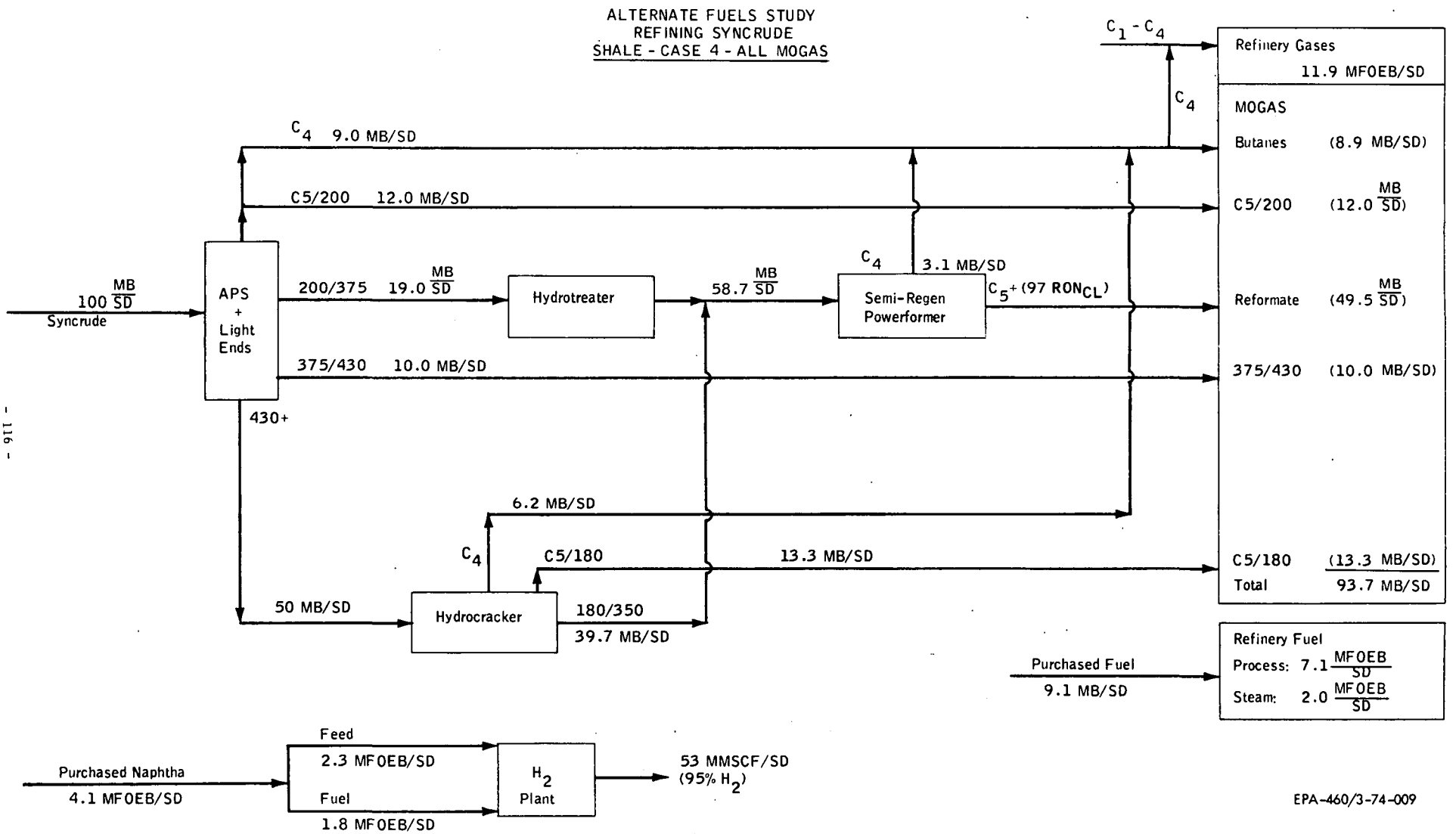

EPA-460/3-74-009

APPENDIX 8

FIGURE 5

ALTERNATE FUELS STUDY
REFINING SYNCRUDE
SHALE - CASE 5 - CAT CRACKING

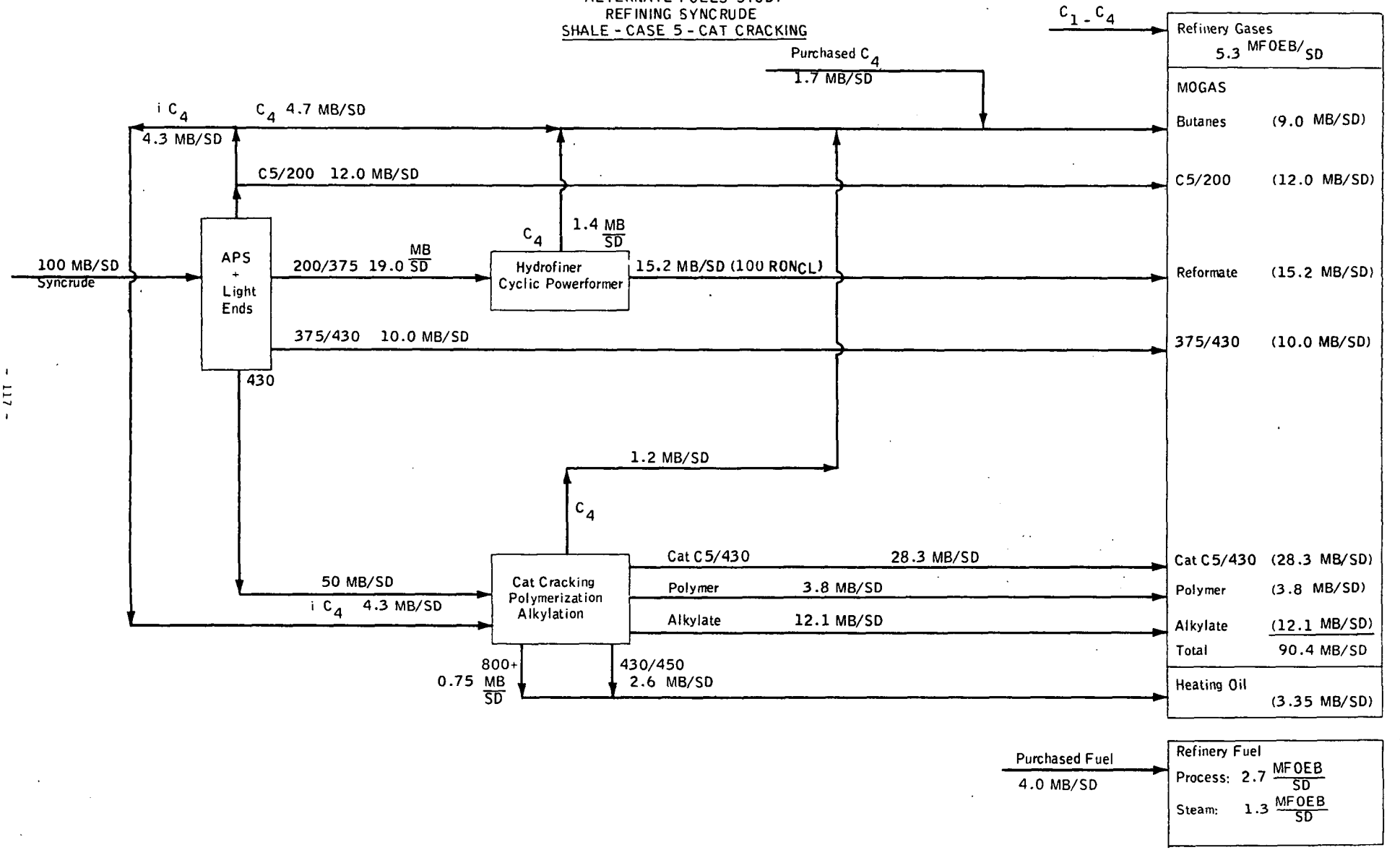

EPA-460/3-74-009

APPENDIX 8

REFERENCES

(1) "Project H-Coal", Hydrocarbon Research, Inc., 1967; Office of Coal Research Contract #14-01-0001-477.

(2) "Evaluation of Project H-Coal"; American Oil Co., Research and Development Department; 12/8/67; OCR Contract #14-01-0001-1188 American Oil Project #6120.

(3) Montgomery, D. P., "Refining of Pyrolytic Shale Oil"; IEC Product Research & Development, Vol. 7, Issue 4, 12/68 (Phillips Petroleum Co.).

APPENDIX 9

COAL MINING COSTS AND INVESTMENTS

The principal sources of the information discussed in this Appendix are:

(a) "Cost Analysis of Model Mines for Strip Mining of Coal in the United States", Bureau of Mines Information Circular No. 8535, 1972.

(b) "U.S. Energy Outlook -- Coal Availability", National Petroleum Council, 1971.

The purposes of this review are to identify the most important factors that affect coal cost, to illustrate the relative importance of the different factors, and to permit reasonable estimates of the future average cost of coal that may be used to produce synthetic fuels. The cost data have been converted from the numbers actually reported in the above references to 1973 dollars in order to be consistent with other cost estimates in this study.

General conclusions for surface mining (unless otherwise noted) are:

(1) operating costs and initial investments vary widely for different ranks of coal.

(2) costs vary with seam thickness and overburden and, hence, with stripping ratio. In general, seam thickness is the more important variable. Tripling of seam thickness may reduce operating and investment costs by 50%.

(3) production costs decrease as capacity increases.

(4) mining productivity may increase 20% by 1985*.

---

* It may be noted that the average productivity of underground mines decreased by 28% from 1969 to 1973 (from 15.61 tons per man-day to 11.20 tons per man-day). Corresponding averages for strip mines were 35.71 and 34.60 tons per man-day.

(5) in 1973, initial investment in a surface mine will have averaged about $9 per ton of annual production. For Western strip mines, the investment will have been lower than the national average, e.g., $6-7/annual ton for an annual capacity of 1 million tons and $2.60-5.60/annual ton for a capacity of 5 million tons. Costs for Midwest and Appalachian surface mines run about 85% higher at the same capacity level.

(6) costs plus 12% DCF return for sub-bituminous coal from the Great Plains area were estimated by the Bureau of Mines to be:

Scale of Operation MM tons/yr.	Average Seam Thickness, ft.	Stripping Ratio	Cost 1973$/Ton F.O.B. Mine, 12% DCF
1	8	7.5	3.98
1	25	3	2.16
5	8	8.8	3.15
5	25	3	1.71

(7) comparable estimates made by the NPC were:

Location	Stripping Ratio	Cost 1973 $/Ton F.O.B. Mine, 12% DCF
Western	6	3.37
"	7	3.60
"	10	4.16
"	15	5.06
Pennsylvania	6	5.30
"	underground mine	9.30

(8) the effect of the DCF return assumed may be illustrated at a constant stripping ratio of 8:1 for Western coal:

% DCF Return	Cost 1973 $/Ton F.O.B. Mine, 12% DCF
10	3.20
15	3.60
20	4.00

(9) other factors affecting the production cost of coal include labor productivity, reclamation costs, and percentage depletion. The high labor intensity of underground mines makes productivity an important factor in total production costs. Labor productivity, at the levels commonly experienced in surface mines, has a relatively smaller

effect on total costs. Estimates of reclamation costs range from 2 cents to 20 cents per ton depending on seam thickness*. If the depletion allowance (currently 10% for coal) were to be eliminated, the effective cost of coal would increase by at least $1/ton.

Several tables will now be presented to illustrate the breakdown of costs for a "model" mine. This mine has a nominal production capacity of 5 million tons/year and is typical of a mine of this size located in Arizona, Colorado, New Mexico or Utah. Summarized characteristics of the model mine are:

- Production: 5 million tons/year.
- Capital investment: $28.7 million[∓].
- Life of mine average operating cost**: $12 MM/year or $2.40/ton.
- Selling price: $3.03/ton*** in 1973 dollars.
- The breakdown of estimated capital requirements is given in Table 1.
- The depreciation schedule is given in Table 2.
- Estimated working capital is reported in Table 3.
- Annual production costs are estimated in Table 4.
- Calculation of the coal selling price is shown in Table 5.

---

* These estimates were made prior to proposed legislation now under consideration by Congress. If enacted, certain of the proposals could increase reclamation costs almost ten-fold from the estimates above.

** Operating costs increase with time because the thicker seams are exploited first.

*** Note that this estimate is consistent with the assumed cost of $3/ton for Western sub-bituminous coal used for the first time-frame (1982) of the present study.

∓ All subsequent financial statistics in Appendix 9 are reported in 1972 dollars, which may be escalated to 1973 dollars by multiplying by 1.04.

APPENDIX 9

TABLE 1

TOTAL ESTIMATED CAPITAL REQUIREMENTS (1972 $)

Exploration, roads, and buildings	$ 2,200,000
Unit-train loading facilities	750,000
Mining equipment	18,311,300
Total direct	21,261,300
Field indirect	425,200
Total construction	21,686,500
Engineering	433,700
Subtotal	22,120,200
Overhead and administration	1,106,000
Subtotal	23,336,200
Contingency	2,322,600
Subtotal	25,548,800
Fee	511,000
Total plant cost (insurance-tax base)	26,059,800
Interest during construction	651,500
Subtotal	26,711,300
Working capital	1,945,400
Total capital requirements	28,656,700

1973 $ = 1.04 x 1972 $

EPA-460/3-74-009

APPENDIX 9

TABLE 2

DEPRECIATION SCHEDULE

Items	Straight-line Depreciation, Yrs.
Exploration, coal lease	20
Buildings, shops	20
Train loading facilities	20
Dragline, cable handers	20
Powerline, substations	20
Loaders, bulldozers	10
Pumps	10
Trucks	6-10
Engineering, overhead, administration contingency, fee, and IDC*	20

* Interest-During-Construction

EPA-460/3-74-009

APPENDIX 9

TABLE 3

ESTIMATED WORKING CAPITAL (1972 $)

Direct labor, 3 months	$ 306,900
Payroll overhead, 3 months	107,400
Operating supplies, 3 months	824,500
Indirect cost, 4 months	226,300
Fixed cost, 0.5 percent of insurance base	130,300
Spare parts	300,000
Miscellaneous expense	50,000
Total	1,945,400

1973 $ = 1.04 x 1972 $

EPA-460/3-74-009

APPENDIX 9

TABLE 4

ESTIMATED ANNUAL PRODUCTION COST (1972 $)

	Total Annual Cost	Cost Per Ton
Direct Cost:		
Production:		
Labor	$ 783,900	$0.15
Supervision	183,000	.04
Subtotal	966,900	.19
Maintenance:		
Labor	233,700	.04
Supervision	27,000	.01
Subtotal	260,700	.05
Total direct labor	1,227,600	.24
Operating supplies		
Spare parts	2,000,000	.40
Explosives	678,000	.14
Lubrication	70,000	.01
Diesel Fuel	125,000	.02
Tires	175,000	.04
Miscellaneous	250,000	.05
Total operating supplies	3,298,000	.66
Power	800,000	.16
Union Welfare	2,000,000	.40
Royalty	875,000	.18
Payroll overhead	429,700	.08
Subtotal	4,104,700	.82
Total direct cost	8,630,300	1.72
Indirect cost: 15 percent of labor, maintenance, & supplies	678,800	.14
Fixed cost:		
Taxes & insurance (2% of plant cost)	521,200	.10
Depreciation	1,484,100	.30
Deferred expenses	716,400	.14
Total fixed cost	2,721,700	.54
Total annual production cost	12,030,800	2.40

1973 $ = 1.04 x 1972 $

EPA-460/3-74-009

APPENDIX 9

TABLE 5

CALCULATION OF COAL-SELLING PRICE

12 percent -- 20 years

R = $28,656,700/7.469 = $3,836,900

less depreciation -1,484,100
$2,352,800 = depletion + net profit

Depletion + net profit = 3/4 gross profit

Gross profit = 1.333 x $2,352,800 = $3,136,300

Sales = production cost + gross profit
= $12,030,800 + $3,136,300 = $15,167,100

Selling price/ton -- $15,167,100/5,000,000 = $3.03 = "cost" of coal, F.O.B. mine

Depletion = 50 percent of taxable income*

Gross profit	$3,136,300
Depletion	1,568,150
Taxable Income	1,568,150
Federal income tax (F.I.T.)	784,100
Net profit	784,050

Annual cash flow = net profit + depreciation + depletion
= $784,100 + $1,484,100 + $1,568,200 = $3,836,400

* Although the depletion allowance applicable to coal is 10% of the "gross income from property" (i.e., essentially 10% of the annual F.O.B. mine value of the coal produced and sold), it is also limited to 50% of the taxable income from the property as computed without application of the allowance.

EPA-460/3-74-009

APPENDIX 10

COST OF OPERATING AN AUTOMOBILE

The major components of the cost of operating an automobile include the following categories: variable or operating costs (which depend on the miles driven) consisting of fuel, oil, maintenance repairs and tires; and fixed costs (independent of miles driven) made up of depreciation, insurance, registration and license fees. In general, the former are related to the miles driven and the weight of the car, while the latter are related to its first cost. From published information (1,2), a breakdown of the various cost categories (in 1973 dollars) has been estimated for three car sizes:

1. Standard size car, curb weight 4000-4300 lbs. equipped with standard accessories and automatic transmission, power steering, power brakes, radio and air conditioning; estimated retail cost $3900.

2. Intermediate size car, curb weight 3500-3800 lbs., equipped with standard accessories and radio, automatic transmission, power steering and air conditioning; estimated retail price $3400.

3. Compact size car, curb weight 2800-3400 lbs., equipped with standard accessories and radio, automatic transmission and air conditioning; estimated retail price $3000.

The following assumptions were made:

- average cost of gasoline in the U.S. in early 1973 was 38¢/gal. including 11.2¢ taxes.
- the ratio of labor costs to material costs for maintenance is 2/1.
- material costs on maintenance is proportional to car weight.
- gasoline/oil costs are in the ratio of 95/5.
- fire and theft insurance costs in first year are proportional to retail price and decrease with the value of the car as the car ages.
- collision insurance is carried for the first five years of the car's life.
- the cost of collision insurance (during the 5 years carried) is proportional to the retail price of the automobile.

The results of these estimates are presented in Table 1 and in Figures 1 and 2.

The next step was to estimate the effect of fuel changes on vehicle operating costs. This involved estimating separately the fuel-related changes in car weight and cost. These estimates were made in terms of incremental weight and cost compared to a 1973 gasoline powered automobile, weight 3500 lb., range 260 miles, retail price $3400.

The following factors were considered separately for this analysis:

- the fuel and fuel storage requirements. In this study, the fuel storage capacity required was assumed to be that necessary to provide the same operating range (i.e., about 260 miles) as is currently possible with 20 gallons of petroleum gasoline (2.25×10^6 BTUs used in an engine of 9.5% thermal efficiency*). The weights were calculated as follows:

$$\text{Incremental Wt.} = \left[134 \times \frac{9.5}{\mathcal{E}} \times \frac{18650}{H}\right] - 134$$

where 134 is the wt. of gasoline and fuel tank for the Otto cycle engine

$\mathcal{E}$ is the thermal efficiency of other engines

H is the net heating value of other fuels, BTU/lb.

18650 is net heating value of gasoline, BTU/lb.

- the engine.

- the need for modifications to meet future exhaust emission requirements, i.e., to meet U.S. post-1976 emission standards: 0.41, 3.4, 0.4 gms./mile for HC, CO, and NO_x, respectively (5).

- the need for modification of the fuel system to handle potentially toxic or hazardous fuels safely, i.e., to avoid loss of toxic fuel vapors and/or contact with harmful liquid by spills, tank rupture or deliberate removal.

---

* Typical of 1973 ICE on Federal Emissions Driving cycle; see Sect. 4, Vol. II.

- the change in support members of the vehicle occasioned by the increase or decrease in weight due to the foregoing factors. By support members are meant the frame, front suspension, rear suspension, brakes, wheels and tires. It is assumed that a three pound increase in the weight of non-load bearing members (e.g., propulsion system, fuel, tank, etc.) will require an increase of one lb. in the load-support members (estimated from data in Ref. 3).

Following is a list of the specific assumptions and approximations used in the analysis:

- an automotive diesel engine weighs 142 lbs. more than a conventional gasoline engine of the same horsepower (116 H.P.). This was estimated from data in (4). The incremental cost is calculated on the assumption that the incremental diesel weight costs $1.70/lb. The estimated differentials include the cost of the fuel injector. However, it is not possible to establish from these generalizations the specific cost of the injector. This point is not critical to the relative fuel comparisons.

- a gas turbine engine is assumed to weigh 100 lbs. less than the Otto cycle engine of the same performance. Its cost is assumed to be equal to that of a diesel engine of same performance.

- the distillate fuels derived from coal will be highly aromatic in nature. They will thus be difficult to burn without smoking. For this reason, diesel engine burning 100% coal distillate is assumed to be derated by 10%. Likewise, the gas turbine engine burning the coal distillate has been derated by 5% to compensate for the expected high luminosity of the coal distillate flame. These penalties of course can be avoided by blending the coal fuel with suitable petroleum fractions to provide mixtures approximating currently available distillates in combustion characteristics.

- the future Otto cycle engine will be equipped with a catalytic exhaust gas treatment device.

- the diesel engine will require modification or devices to meet future exhaust emission levels including restrictions on exhaust odor and particulate emissions.

- the low front-end volatility of 100% coal gasoline will require the use of fuel injection for good engine performance. By blending with suitable low boiling petroleum fractions, a gasoline suitable for use in current carburetted engines could be obtained.

- an Otto cycle engine burning methanol will require bigger fuel pump, lines, filter, manifold heater and carburetor than a gasoline fuel engine.

- a gas turbine burning methanol will require large fuel pump, lines, filter and controls. However, the weight debit associated with these items is assumed to be compensated by the low luminosity of its flame which will allow savings in combustor cooling requirements.

- the fuel cost for the various cases was calculated as follows:

$$\text{Fuel Cost} = (\text{BFC}) \left(\frac{C_{FX}}{3.35} \right) \left(\frac{9.5}{\mathcal{E}} \right)$$

where: BFC is the base fuel cost (gasoline) read from Figure 1 for the appropriate car weight

C_{FX} - cost of the new fuel, $\$/10^6$ BTU ex tax

$\mathcal{E}$ - thermal efficiency of the various engines, i.e., 9.5% for the Otto cycle, 16.5% for the diesel and 10% for the gas turbine (on the Federal Emissions Driving Cycle).

3.35 = cost of petroleum gasoline in $\$/10^6$ net BTU based on 38.1 ¢/gal.*

- the various fuels will have no unusual effect on vehicle maintenance requirements. This assumption is required by lack of data on which to base a sounder estimate.

- while there may be differences in maintenance and lubrication requirements between engine types, it is felt this will not nullify the comparison among the fuels in a given engine.

The total fixed costs were read from Figure 2 for the appropriate retail price (i.e., total cost) of the automobile.

Tables 3 and 4 present the estimates for the various engine and future fuel combinations using the following fuel costs:

---

* Since the cost alternate fuels is on an ex tax basis in this study, the reference gasoline cost has to be on the same basis. Purely fortuitously, the ex tax cost in early 1974 is about the same as the cost with tax in early 1973, so that Figure 1 can be used in making corrections.

	$/10^6 BTU ex tax (1973 $)
Petroleum gasoline (1974) @ 38¢/gal. ex tax	3.35
Petroleum distillate (1974) @ 37¢/gal. ex tax	2.80
Shale gasoline (1982)*	2.70
Shale distillate (1982)	2.10
Coal gasoline (1982)	3.35
Coal distillate (1982)	2.70
Methanol from coal (1982)	3.85

Table 4 shows the total costs of car ownership. It should be emphasized that the primary purpose of this exercise was the comparison of the various fuels. The comparisons among engines are of very questionable validity because of the paucity of reliable information on the efficiency of the diesel and gas turbine engines under average U.S. automotive driving conditions in vehicles of comparable performance characteristics.

---

* As mentioned in the body of the report, these costs, although for 1982, are in 1973 dollars.

APPENDIX 10

TABLE 1

ESTIMATED LIFE TIME COST OF OPERATING AN AUTOMOBILE (1973 DATA)

(Car Life 10 years, Total Mileage - 100,000)

Type of Car	Standard	Intermediate	Compact
Curb Wt., lbs.	4000-4300	3500-3800	2800-3400
Retail Price, $	3900	3400	3000
Variable or Operating Lifetime Costs, $*			
Gasoline	3180	3000	2540
Oil	168	158	134
Maintenance and Repairs			
Labor	1430	1430	1430
Materials	720	635	540
Total	2150	2065	1970
Tires	620	590	500
Total Lifetime Operating Costs	6118	5813	5144
Fixed Costs**			
Depreciation	3900	3400	3000
License & Registration	280	218	186
Collision Insurance	715	630	536
Property Damage & Liability	1790	1790	1790
Total Fixed Costs	6933	6284	5722
GRAND TOTAL COSTS	13,051	12,097	10,866

* From Figure 1.

** From Figure 2; does not include interest cost on capital required for the purchase of the car.

EPA-460/3-74-009

APPENDIX 10

TABLE 2

ESTIMATE OF OPERATING COST OF POST 1976 AUTOMOBILES

(10 years, 100,000 miles)

Fuel Source	Petroleum			Shale			Coal				
Fuel Type	Gasol.	Distill.	Distill.	Gasol.	Distill.	Distill.	Gasol.	Distill.	Distill.	MeOH	MeOH
Engine Type	Otto	Diesel	G.T.	Otto	Diesel	G.T.	Otto	Diesel	G.T.	Otto	G.T.
Incremental Wt. (lbs)* (Due to Following Factors)											
Fuel & Fuel Storage	0	-56	-7	0	-56	-7	0	-56	-7	156	154
Engine	0	142	-100	0	142	-100	0	196	-80	30	-100
Emission Correct.	30	10	0	30	10	0	30	10	0	15	0
Toxicity & Safety	0	0	0	0	0	0	20	10	10	20	20
Support Members	10	32	-36	10	32	-36	17	53	-25	68	16
Total Δ Wt., lbs.	40	128	-143	40	128	-143	67	213	-102	279	90
Total Car Weight	3540	3628	3357	3540	3628	3357	3567	3713	3398	3779	3590
Lifetime Operating Cost, 1973 $											
Fuel	2890	1415	2195	2330	1060	1610	2900	1390	2130	3540	3230
O,M,R,T**	2770	2790	2710	2770	2790	2710	2780	2810	2710	2840	2770
Total Operating Cost	5660	4205	4905	5100	3850	4320	5680	4200	4840	6380	6000
Fuel Cost ¢/Mile (ex tax)	2.9	1.4	2.2	2.3	1.1	1.6	2.9	1.4	2.1	3.5	3.2

* Reference vehicle 1973 gasoline, Otto cycle car, 3500 lbs. curb weight.

** Oil, Maintenance, Repairs and Tires.

EPA-460/3-74-009

APPENDIX 10

TABLE 3

ESTIMATE OF FIXED COSTS OF POST 1976 AUTOMOBILES

(10 years, 100,000 miles)

Fuel Source	Petroleum			Shale			Coal				
Fuel Type	Gasol.	Distill.	Distill.	Gasol.	Distill.	Distill.	Gasol.	Distill.	Distill.	MeOH	MeOH
Engine Type	Otto	Diesel	G.T.	Otto	Diesel	G.T.	Otto	Diesel	G.T.	Otto	G.T.
Incremental Cost* $ because of Following Factors											
Fuel Storage	0	-10	0	0	-10	0	0	-10	0	15	15
Engine	0	245	245	0	245	245	100	335	345	50	295
Emission Correct.	300	200	0	300	200	0	300	200	0	100	0
Toxicity & Safety	0	0	0	0	0	0	60	10	10	60	60
Support Members	8	24	-27	8	24	-27	13	40	-17	51	12
Total Δ Cost $	308	459	218	308	459	218	423	575	338	276	382
Total Purchase Cost $	3708	3859	3618	3708	3859	3618	3823	3975	3738	3676	3782
Total Fixed Costs (10 yrs.)**	6660	6860	6550	6660	6860	6550	6820	7050	6720	6650	6790

* Reference vehicle 1973, gasoline, Otto cycle car, cost $3400.

** From Figure 2.

EPA-460/3-74-009

APPENDIX 10

TABLE 4

ESTIMATED COSTS OF OWNING AND OPERATING A POST 1976 AUTOMOBILE*

(Lifetime, 10 yrs., 100,000 miles)

Raw Material	Fuel	Engine	Lifetime Costs $ (1973) Operating	Fixed Charges	Total
Petroleum	Gasol.	Otto	5660	6660	12,320
Petroleum	Distill.	Diesel	4205	6860	11,060
Petroleum	Distill.	G.T.	4905	6550	11,460
Shale	Gasol.	Otto	5100	6660	11,760
Shale	Distill.	Diesel	3850	6860	10,710
Shale	Distill.	G.T.	4320	6550	10,870
Coal	Gasol.	Otto	5680	6820	12,500
Coal	Distill.	Diesel	4200	7050	11,250
Coal	Distill.	G.T.	4840	6720	11,560
Coal	Methanol	Otto	6380	6650	13,030
Coal	Methanol	G.T.	6000	6790	12,790

* Intermediate size - reference vehicle, 3500 lbs., cost $3400.

EPA-460/3-74-009

APPENDIX 10

FIGURE 1

OPERATING COSTS OF AN AUTOMOBILE
(CAR LIFE 10 YRS., 100,000 MILES)

VARIABLE COSTS - 1973 $

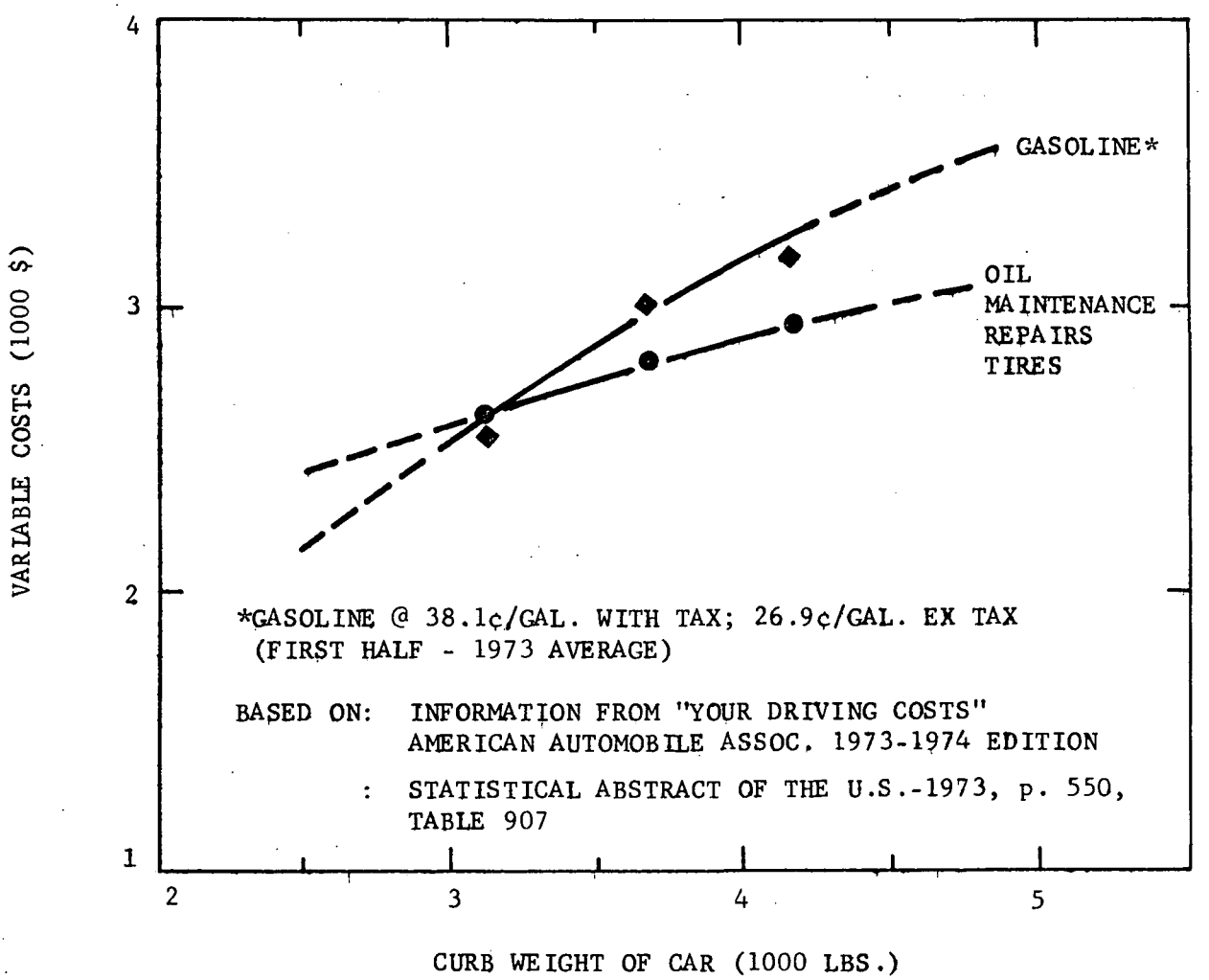

EPA-460/3-74-009

APPENDIX 10

FIGURE 2

OPERATING COSTS OF AN AUTOMOBILE
(CAR LIFE, 10 YRS.; 100,000 MILES)

FIXED COSTS - 1973 $

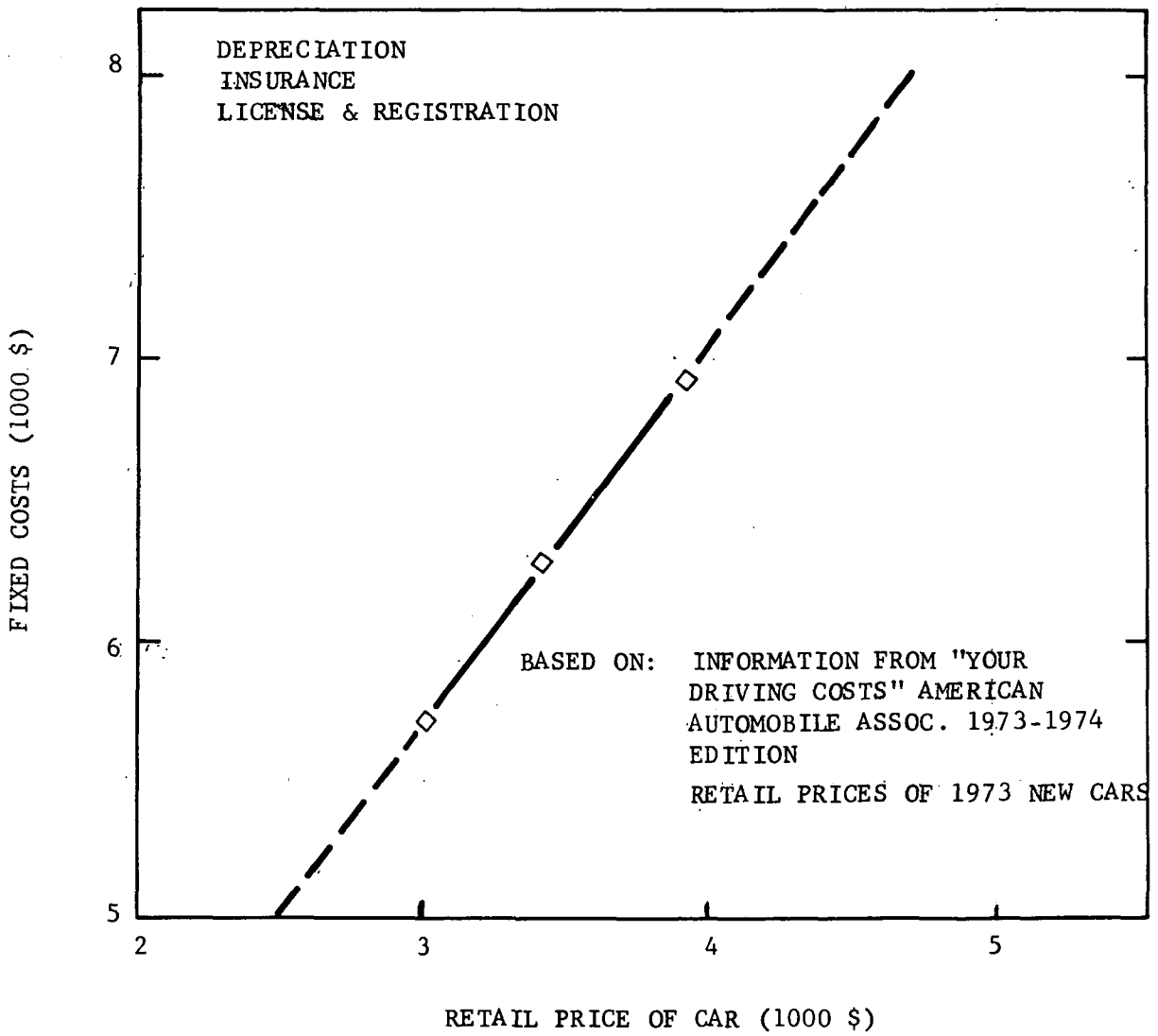

EPA-460/3-74-009

APPENDIX 10

REFERENCES

(1) "Your Driving Costs - 1973-1974 Edition," Pamphlet from American Automobile Association.

(2) Statistical Abstract of the United States, 1973, page 550, Table 907.

(3) Hangen, K., et al., "The Chevrolet Corvair," SAE Preprint 140C, January 1960.

(4) Springer, K. J., et al., SAE Preprint 739133, Table 1.

(5) Report by the Committee on Motor Vehicle Emissions, February 12, 1973, National Academy of Sciences.

TECHNICAL REPORT DATA
(Please read Instructions on the reverse before completing)

1. REPORT NO. EPA-460/3-74-009-c	2.	3. RECIPIENT'S ACCESSION NO.
4. TITLE AND SUBTITLE Feasibility Study of Alternative Fuels for Automotive Transportation - Volume III, Appendices		5. REPORT DATE June 1974
		6. PERFORMING ORGANIZATION CODE
7. AUTHOR(S) F. H. Kant, R. P. Cahn, A. R. Cunningham, M. H. Farmer, W. Herbst, E. H. Manny		8. PERFORMING ORGANIZATION REPORT NO.
9. PERFORMING ORGANIZATION NAME AND ADDRESS Exxon Research and Engineering Co. P.O. Box 45 Linden, New Jersey 07036		10. PROGRAM ELEMENT NO. 1A2017
		11. CONTRACT/GRANT NO. 68-01-2112
12. SPONSORING AGENCY NAME AND ADDRESS Environmental Protection Agency Office of Mobile Source Air Pollution Control Alternative Automotive Power Systems Division 2929 Plymouth Road, Ann Arbor, Michigan 48105		13. TYPE OF REPORT AND PERIOD COVERED Final June 1973-June 1974
		14. SPONSORING AGENCY CODE
15. SUPPLEMENTARY NOTES		

16. ABSTRACT

This study identifies feasible and practical alternatives to automotive fuels derived from petroleum for the 1975-2000 time period. The alternative fuels are liquids derived from domestic coal and oil shale -- specifically, gasolines, distillates, and methanol. While many uncertainties remain, initial production of the new fuels is likely within the next five to seven years.

17. KEY WORDS AND DOCUMENT ANALYSIS

a. DESCRIPTORS	b. IDENTIFIERS/OPEN ENDED TERMS	c. COSATI Field/Group
Automotive fuels Substitutes Feasibility Forecasting Oil-Shale Methyl alcohol Gasoline	Automotive fuels Non-petroleum fuels Synthetic gasolines Coal liquids	13 B

18. DISTRIBUTION STATEMENT Release unlimited	19. SECURITY CLASS *(This Report)* Unclassified	21. NO. OF PAGES 144
	20. SECURITY CLASS *(This page)* Unclassified	22. PRICE

EPA Form 2220-1 (9-73)