EPA-AA-TEB-511-81-12

EPA Evaluation of the V-70 Vapor Injector Device Under Section 511 of the Motor Vehicle Information and Cost Savings Act

This document contains several pages which may not reproduce well. Any questions concerning the legibility of these pages should be directed to: Merrill W. Korth, Environmental Protection Agency, Office of Mobile Source Air Pollution Control, Emission Control Technology Division, 2565 Plymouth Road, Ann Arbor, MI 48105, (313) 668-4299 or FTS 374-8299.

by

Thomas J. Penninga

May 1981

Test and Evaluation Branch
Emission Control Technology Division
Office of Mobile Source Air Pollution Control
U.S. Environmental Protection Agency

EPA-AA-TEB-511-81-12

6560-26

ENVIRONMENTAL PROTECTION AGENCY

[40 CFR Part 610]

[FRL _____]

FUEL ECONOMY RETROFIT DEVICES

Announcement of Fuel Economy Retrofit Device Evaluation for "V-70 Vapor Injector"

AGENCY: Environmental Protection Agency (EPA).

ACTION: Notice of Fuel Economy Retrofit Device Evaluation.

SUMMARY: This document announces the conclusions of the EPA evaluation of the "V-70 Vapor Injector" device under provisions of Section 511 of the Motor Vehicle Information and Cost Savings Act.

BACKGROUND INFORMATION: Section 511(b)(1) and Section 511(c) of the Motor Vehicle Information and Cost Savings Act (15 U.S.C. 2011(b)) requires that:

(b)(1) "Upon application of any manufacturer of a retrofit device (or prototype thereof), upon the request of the Federal Trade Commission pursuant to subsection (a), or upon his own motion, the EPA Administrator shall evaluate, in accordance with rules prescribed under subsection (d), any retrofit device to determine whether the retrofit device increases fuel economy and to determine whether the representations (if any) made with respect to such retrofit devices are accurate."

(c) "The EPA Administrator shall publish in the Federal Register a summary of the results of all tests conducted under this section, together with the EPA Administrator's conclusions as to -

(1) the effect of any retrofit device on fuel economy;

(2) the effect of any such device on emissions of air pollutants; and

(3) any other information which the Administrator determines to be relevant in evaluating such device."

EPA published final regulations establishing procedures for conducting fuel economy retrofit device evaluations on March 23, 1979 [44 FR 17946].

ORIGIN OF REQUEST FOR EVALUATION: On September 20, 1980, the EPA received a request from Mr. Richard Ploch for evaluation of a fuel saving device termed "V-70 Vapor Injector". This Device is claimed to "give a minimum of 10% savings in gasoline." The device consists of an aerator which supplies a vaporized liquid fuel additive to the carburetor PCV inlet line.

Availability of Evaluation Report: An evaluation has been made and the results are described completely in a report entitled: "EPA Evaluation of the V-70 Vapor Injector Device Under Section 511 of the Motor Vehicle Information and Cost Savings Act," report number EPA-AA-TEB-511-81-12 consisting of 85 pages including all attachments.

Copies of these reports may be obtained from the National Technical Information Service by using the above report numbers. Address requests to:

National Technical Information Service
U.S. Department of Commerce
Springfield, VA 22161
Phone: Federal Telecommunications System (FTS) 737-4650
Commercial 703-487-4650

Summary of Evaluation

EPA fully considered all of the information submitted by the device manufacturer in the application. The evaluation of the "V-70 Vapor Injector" was based on that information. The Applicant was sent two

letters requesting additional information and test data. EPA did not receive a response to either letter from the Applicant. The EPA is still required to complete the evaluation based on the available information and publish the results of this evaluation.

The Applicant submitted insufficient test data to demonstrate that the "V-70 Vapor Injector" would improve fuel economy. EPA testing of similar devices failed to show a fuel economy benefit. The explanations in the application of how the device improves fuel economy were incomplete. Additional information concerning the device and the "V-70 Vapor Fuel Additive" were repeatedly requested but to no avail. Without this information, no conclusions as to the safety of the device or its effect on unregulated emissions, could be made. Based on the information provided by the Applicant, there was no technical basis to support any claims for a fuel economy improvement or emissions reduction with the "V-70 Vapor Injector".

FOR FURTHER INFORMATION CONTACT: Merrill W. Korth, Emission Control Technology Division, Office of Mobile Source Air Pollution Control, Environmental Protection Agency, 2565 Plymouth Road, Ann Arbor, Michigan 48105, 313-668-4299.

Date

Edward F. Tuerk
Acting Assistant Administrator
for Air, Noise, and Radiation

EPA Evaluation of the V-70 Vapor Injector Device under Section 511 of the Motor Vehicle Information and Cost Savings Act

The following is a summary of the information on the device as submitted by the Applicant and the resulting EPA analysis and conclusions. The Applicant has failed to respond to two letters requesting additional information and test data. Therefore, the results of this preliminary evaluation are based on information supplied in the initial application and will be published according to Federal Register 610.30(c).

1. Marketing Identification of the Device:

"V-70 Vapor Injector. (If a new marketing company is organized, the device will be marketed under the name V-80.)"

2. Inventor of the Device and Patents:

A. Inventor

Ivey Herpin

B. Patent

Patent Number 3537434 issued 11-3-70
Patent Number 3716040 issued 2-15-73

3. Manufacturer of the Device:

"Device is currently manufactured by:

Herule Research and Manufacturing, Inc.
P.O. Box 489
Ennis, Texas

4. Manufacturing Organization Principals:

Gene T. Rohl - President
Ivey Herpin - Vice President

5. Marketing Organization in U.S. making Application:

Company not yet organized.

6. Applying Organization Principals:

Elwood Ross
Jay Rodgers
Richard L. Ploch
Ivey Herpin

7. Description of Device:

A. Purpose of the Device (as supplied by Applicant):

"Attached is a copy of patent #3716040 which outlines the purpose, theory of operation, and gives a detailed description of the construction and operation." See Attachment A.

8. Applicability of the Device (as supplied by Applicant):

"The V-70 will operate on any gasoline operated automobile."

9. Device Installation - Tools and Expertise Required (as supplied by Applicant):

"The device is connected to the automobile by a "T" connector to the vacuum line between the PCV valve and the carburetor. Also, it could be connected through a spacer plate under the carburetor. The unit is held in place by four screws on the base of the unit. Tools required - drill, screw driver, and knife to cut vacuum line." Also included in the application was a page of installation instructions (see attachment B).

10. Device Operation (as supplied by Applicant):

"Instructions are furnished with each unit pertaining to the installation and operation. Copy is enclosed." See Attachment B.

11. Maintenance (claimed):

"When the liquid level reaches the "add" line, one quart of additive and one quart of distilled water is added to bring the liquid level to the "full" mark."

12. Effects on Vehicle Emissions (non-regulated) (claimed):

"We have a copy of a test requested by a company associated with Warule Research & Manufacturing, Inc. which was completed by Dr. James C. Cox, Jr. at Wayland Baptist College. This test was done in 1972. We had a preliminary test made by Scott Environmental Technology, Inc. This test was done in April 1979."

13. Effects on Vehicle Safety (claimed):

"The device would not result in any unsafe conditions endangering the automobile or its occupants or persons or property in close proximity of the automobile."

14. Test Results (Regulated Emissions and Fuel Economy) (submitted by Applicant):

"Enclosed are test results from Dr. Cox's 1972 test and the 1979 preliminary test by Scott Environmental Technology, Inc. Other preliminary tests made by individuals and potential corporate

customers used the gallons to miles evaluation, and according to the information furnished to us, is not valid."

15. Analysis

A. Description of Device:

The device is basically a controlled air bleed device where the air is bubbled through a mixture of water and an additive supplied by the Applicant. The device contains an inlet air filter and a baffle to prevent flow of liquid into the engine. The device installs into the PCV - carburetor vacuum line.

B. Applicability of the Device:

The applicability of the device to "operate on any gasoline operated automobile" is judged valid for all gasoline fuel vehicles presently being produced.

C. Device Installation - Tools and Expertise Required:

The device installation appears to be straight forward, well explained, and could be easily carried out by any "mechanically inclined" person.

D. Device Operation:

The Applicant supplied additional installation instructions, but never explained the theory of operation of the device. The patent states that "inducting an additive into the fuel system of a motor vehicle to enhance the combustibility of the fuel by lowering the flashpoint thereof, and to reduce waste due to incomplete combustion." The patent also claims the device "insures a proper ratio between the carbureted fuel and additive vapors."

These explanations do not indicate why the device improves fuel economy. The flash point is the lowest temperature of the fluid that allows inflammable vapors to be formed. It is found by heating the fuel slowly and then sweeping a flame across the surface of the liquid, a distinct flash is obtained at the flash point. The flash points of most gasolines are below 0°F. Lowering the flash point does not necessarily correlate with increased vehicle fuel economy. The reduction of waste due to incomplete combustion is not explained. The application therefore does not explain the true operation of the device. The Applicant was questioned about the actual theory of his device in a December 26, 1979 letter from Charles Gray, Jr. This letter also asked for clarification of several other points in the application and is included as Attachment C. The applicant never responded to this letter.

The second major question about the operation of the device was the make-up of the V-70 Vapor Fuel Additive. The additive was not described in application other than that it was a "specially

prepared formula of oxygen-bearing petroleum distillates". The December 26, 1979 letter also requested information on this additive.

The analysis of the operation of this device is incomplete due to a lack of information. The device appears to be able to introduce air which has been bubbled through a mixture of water and an unknown additive into the PCV-carburetor vacuum line. The effect of this introduction is not known. There appears to be no theoretical reason to believe that "increased fuel combustion", "elimination of vicious carbon build-up", "smoother, longer engine life", "increased gas mileage", or "reduced harmful hydrocarbon emissions (pollutants)" would occur. Similar vapor air bleed devices tested by EPA showed no significant improvement in fuel economy (see Attachment D).

E. Device Maintenance

Applicant claims that the only maintenance required is to refill the water-additive reservoir when it reaches the "add" indicator. This appears to be the only maintenance required.

F. Effects on Vehicle Emissions (non-regulated):

The Applicant makes no statements about the effect of the device on non-regulated emissions. An analysis cannot be made without the knowledge of the chemical composition of the V-70 Vapor Fuel Additive. As noted above, the required information was requested in the December 26, 1979 letter.

G. Effects on Vehicle Safety:

The Applicant claims the chemical would not result in any unsafe condition. The only safety problem apparent from the application is the V-70 Vapor Fuel Additive. Until the chemical composition is known, an accurate analysis of the device-additive impact on vehicle operation safety cannot be made.

H. Test Results Supplied by Applicant

The Applicant supplied data came from two sources; Wayland Baptist College and Scott Environmental Technology, Inc. There are several problems with the data which do not allow a proper evaluation of the V-70 Vapor Injector. The December 26, 1979 letter (Attachment C) requested additional information. No answer was received. A review of the data is given below:

1. The Scott Environmental Technology, Inc. test data (see Attachment E). A table of the test results is given below:

Test No.	Test Type	HC gms/mile	CO gms/mile	NOx gms/mile	Fuel Economy MPG
1	Baseline-HFET	.55	12.62	1.17	24.11
2	V-70 Vapor Power - HFET	.57	15.50	1.11	25.99
% Change		(+)3.6%	(+)22.8	(-)5.1	(+)7.8

There are several problems with this data. They are:

a. The test data was run at a laboratory which is not on the EPA list of recognized laboratories. Scott Environmental Technology, Inc. is not on our list because the laboratory has not yet been checked out by EPA personnel in the formal laboratory recognition process.

b. Only Highway Fuel Economy Tests (HFET) were run. The Federal emission standards are based on the Federal Test Procedure (FTP). The HFET emission data is not correlatable to the actual FTP regulated emission standards.

c. Only one HFET was run in each condition. With unknown test repeatability, the validity of the 7.8% increase in fuel economy is questionable.

d. Only one vehicle was tested. Due to the differences in engine/vehicle characteristics it is not possible to extrapolate the tests on one vehicle to all gasoline fuel vehicles.

e. Test laboratories normally maintain about 70 grains water/lb. dry air so as to minimize the humidity correction factor for NOx emissions. We do not understand why Scott Labs would permit the testing when the humidity level was 24 grains/lb. dry air. The amount of water which would vaporize in the V-70 injector would depend on the moisture content of the air coming into the device. Higher moisture content in the inlet air could reduce the effectiveness of the device.

f. The FTP and HFET test procedures require the measurement of HC, CO, CO_2, and NOx background levels and these levels are to be substracted from the bag results. The Scott data indicates only HC background levels were measured.

g. The testing indicates a 22.8% increase in CO which would put many test vehicles over the emission standard.

These problems were noted in the EPA December 26, 1979 letter to the Applicant.

2. The Wayland Baptist College test data (see Attachment F). The testing data is given below: Units are microgram per cubic meter

Test No.	Test Type	CO	Particulate	HC	NOx	CO_2
23	1500 RPM Baseline	120	100	120	60	80
25	1500 RPM V-70	40	50	60	30	30
24	1000 RPM Baseline	140	80	80	70	90
26	1000 RPM V-70	50	50	40	40	40

There are several problems with this data.

a. This office has never heard of that laboratory before. To the best of our knowledge, Wayland Baptist College is not a qualified independent laboratory for automotive emission testing.

b. The test procedures used in collecting the data are not described. The units of measurement indicate that conventional equipment and techniques were not used. The units of microgram/cubic meter do not compensate for varying exhaust volume.

c. Only two states of operation (1) 1500 RPM in neutral and (2) 1000 RPM in drive, were tested. This data indicates nothing about transient cycles.

d. The data conflicts with the Scott data which showed an increase in HC and CO.

e. The data does not include any fuel consumption measurements.

f. The test vehicle and test equipment were not described.

The two sets of data do not demonstrate the effect of the V-70 Vapor Injector on gasoline powered vehicles. Further testing would be required to make such a documentation. A test plan was developed for the applicant and transmitted in the EPA December 26, 1979 letter. No response was received.

J. EPA Testing V-70 Vapor Injector:

Because the Applicant submitted insufficient test data, a test plan was developed which when completed would demonstrate the results of installing a V-70 Vapor Injector. The Applicant never responded. A second letter was sent December 22, 1980 (see Attachment G). The Applicant did not respond. Therefore, lacking any data to substantiate the applicant's claims, no EPA testing of the V-70 Vapor Injector was performed. Several other devices tested by EPA have introduced water or water alcohol mixtures into

the combustion chambers. In sufficient quantity such additive can extend the detonation limits of the engine which in turn allows modifications which can improve fuel economy. The amount of additive added by the V-70 Vapor Injector is stated to be about 1.89 ml per mile. At 3785 ml per gallon, a 20 mile per gallon vehicle would use 189.25 ml per mile. The V-70 Injector mixture to mixture plus fuel ratio is about one percent. This value will depend on relative humidity of inlet air. The EPA testing on other devices noticed no change in fuel economy for this small amount of additive. Therefore, it is unlikely that the 1% additive addition from the V-70 Vapor Injector will impact vehicle emissions or fuel economy.

16. Conclusions

The Applicant submitted insufficient test data to prove that the "V-70 Vapor Injector" would improve fuel economy. EPA testing of similar devices failed to show a fuel economy benefit. Therefore, it is unlikely that testing of the device would show a fuel economy benefit.

List of Attachments

Attachment A	Patent #3761040
Attachment B	Installation Instructions
Attachment C	December 26, 1979 letter from C. Gray to Richard C. Ploch.
Attachemnt D	Evaluation of the SCATPAC Device
Attachment E	Emission Results from an Automobile using the Frantz Vapor Injector
Attachment F	An Evaluation of the Econo-Mist Device
Attachment G	Evaluation of the Turbo Vapor Injector
Attachment H	The Mark II Vapor Injector: An Air-Vapor Bleed Device Evaluated
Attachment I	Scott Environmental Technology, Inc.
Attachment J	Wayland Baptist College Data.
Attachment K	December 22, 1980 letter from M. Korth

United States Patent [19]
Herpin

[11] 3,716,040
[45] Feb. 13, 1973

[54] FUEL ADDITIVE INDUCTOR FOR INTERNAL COMBUSTION ENGINE

[76] Inventor: Ivey Herpin, 110 No. Ira Ave., Dallas, Tex. 75211

[22] Filed: Aug. 21, 1970

[21] Appl. No.: 63,766

[52] U.S. Cl. .....123/198 A, 123/25 R, 123/25 C, 123/25 E, 123/134, 55/434, 261/124

[51] Int. Cl. F02b 47/02, F02m 17/22

[58] Field of Search .....123/198 A, 25 C, 25 E, 25, 123/134; 137/592; 222/564, 464, 382, 195; 261/124, 122; 55/434, 257, 256, 255, 337; 248/65

[56] References Cited

UNITED STATES PATENTS

3,537,434	11/1970	Herpin	123/134
3,450,116	6/1969	Knight et al.	123/198 A
1,391,899	9/1921	Lynch	261/124
3,038,454	6/1962	Hunders	123/198 A X
3,081,239	3/1963	Claus et al.	261/124 X
1,977,360	10/1934	Talbot	222/382
2,058,752	10/1936	Wray	248/65
1,685,598	9/1928	Davis	123/198 A
1,899,476	2/1933	Paine	123/25.4
3,535,853	10/1970	Brown et al.	55/337
1,708,587	4/1929	Patterson	123/25.4

FOREIGN PATENTS OR APPLICATIONS

672,332	12/1929	France	55/434

Primary Examiner—Wendell E. Burns
Attorney—Cecil L. Wood

[57] ABSTRACT

A device for containing a liquid fuel additive, such as a water-alcohol solution, which is vaporized and induced by vacuum into the fuel system of the internal combustion engine. The device includes a container for the liquid additive composition, having an adjustable vacuum controlled air intake valve for controlling the flow of air from a manifold within the liquid to produce the vapor carried to the engine. The air is filtered before entering the container, and a baffle device prevents the flow of liquid from the container outlet.

6 Claims, 10 Drawing Figures

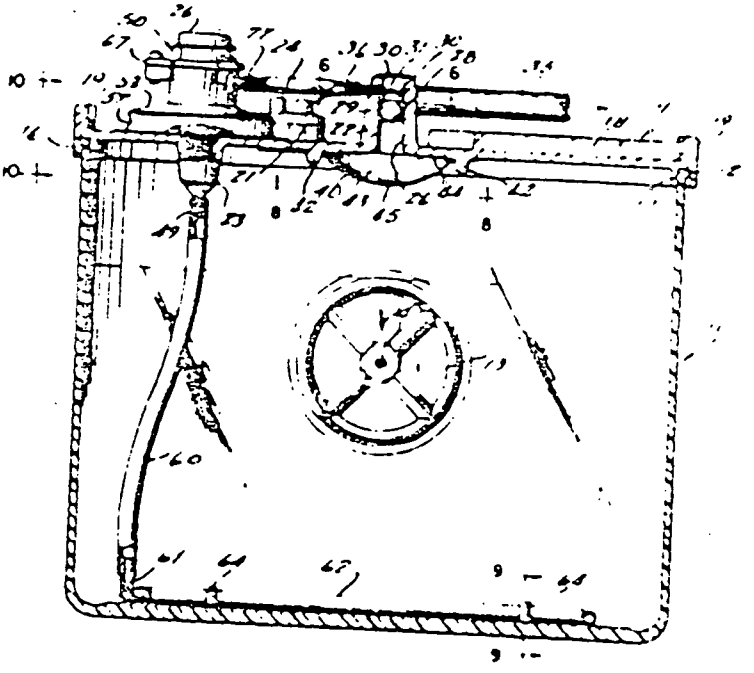

FUEL ADDITIVE INDUCTOR FOR INTERNAL COMBUSTION ENGINE

SUMMARY OF THE INVENTION

The invention relates to apparatus for inducting, by vacuum, a vaporized additive into the fuel system of an internal combustion engine, and has particular reference to automotive installations.

A prime object of the invention resides in the provision of apparatus which consists of a container for a fuel additive, such as a water-alcohol solution, having a closure in which an adjustable vacuum controlled air intake valve is installed through which atmospheric air is admitted to an aerator in the container by which the contents are agitated to a vaporous state to be withdrawn by vacuum and inducted into the fuel system.

A further object of the invention is that of providing a simple and effective means of inducting an additive into the fuel system of a motor whereby to enhance the combustibility of the fuel, by lowering the flash point thereof, and to reduce waste due to incomplete combustion.

Still another object of the invention is that of providing a device by which water vapors, or any combination of water with soluble combustibles, can be inducted into the fuel system more effectively than conventional devices designed for such purpose which generally are lacking in effective vaporization of the additive elements and the most efficient control thereof whereby to insure a proper ratio between the carbureted fuel and additive vapors.

Broadly, the invention contemplates the provision of apparatus by which an additive can be vaporized and inducted into a fuel system by a vacuum, while controlling the volume thereof and preventing the flow of liquid additive to the engine.

The novel features of the invention, as well as additional objects and the advantages thereof, will be understood more fully from the following description when read in connection with the accompanying drawings, in which:

FIG. 1 is a side elevational view of a preferred form of inductor device according to the invention.

FIG. 2 is a top view of the device in FIG. 1.

FIG. 3 is a vertical sectional view, taken on line 3—3 of FIG. 2, showing details of the inlet manifold and of the outlet passage and valve.

FIG. 4 is a transverse sectional view, taken on line 4—4 of FIG. 1, showing details of the inlet manifold and of the container wall brace.

FIG. 5 is a fragmentary enlarged sectional view similar to that taken on line 3—3 of FIG. 2, showing details of the inlet valve assembly and including the inlet air filter.

FIG. 6 is a fragmentary sectional view, taken on line 6—6 of FIG. 3, showing details of the outlet passage and valve.

FIG. 7 is a fragmentary sectional view, taken on line 7—7 of FIG. 2, showing details of the filler plug.

FIG. 8 is a fragmentary view of the baffle for the outlet passage as viewed along the line 8—8 of FIG. 3.

FIG. 9 is a fragmentary sectional view, taken on line 9—9 of FIG. 3, showing the retaining bosses for the manifold tubing, and

FIG. 10 is a fragmentary view of the container mounting rib as viewed along the line 10—10 of FIG. 3.

The inductor device illustrated in FIGS. 1 through 9 of the drawing is an improved form of the device disclosed in applicant's co-pending application under Ser. No. 787,938, filed Dec. 30, 1968, and entitled Vacuum Fuel Additive Inductor for Internal Combustion Engines.

Referring particularly to FIGS. 1 through 4 of the drawings, the improved device includes a container 10 having a closure or cover 11 defining a closed chamber for a liquid additive to be vaporized and inducted into the carburetor of the engine. The device would be suitably mounted, by means to be described, within the engine compartment of an automotive vehicle.

The container 10 is preferably fabricated of a plastic material, which is transparent for the purpose of observing the liquid level therein, but may be fabricated of glass or any other suitable material. As seen in the drawings, the container is laterally elongated including a flat-bottom wall, parallel side walls and rounded end walls. The upper edge of the container wall is formed with an outwardly extending lip 12 to define an upwardly facing edge surface wider than the thickness of the container wall.

Since the laterally elongated container is fabricated of plastic, as shown in the drawings, and since the container is to be subjected to a vacuum for negative pressure, it may be desirable to provide a brace to prevent the inward deflection of the confronting side walls of the container. A bracing assembly for this purpose includes two circular disc-like pads 13, which may be metal stampings and provided with suitable reinforcing ribs, and a transverse rod 14 seated in suitable central openings or recesses in the pads. The pads 13 are preferably cemented to the side walls to maintain the brace assembly at the appropriate locations on the confronting side walls.

As best seen in FIGS. 2 and 3, the cover or closure 11 is generally flat and is fabricated of a suitable metal. The edge wall of the cover includes a depending peripheral lip 16 which, with a depending rib 17, spaced inwardly therefrom, defines a peripheral groove dimensioned to receive the lip 12 of the container and in assembled relation, the lip 12 of the latter is preferably sealed within the cover groove with an epoxy resin, for example, to provide a closed sealed unit.

The upper surface of the cover 11 is formed with strengthening ribs 18 on its upper surface, and is further provided with arcuate mounting ribs 19 at either end thereof for the purpose of mounting the container-closure assembly within the vehicle by means of suitable brackets.

A boss 21 is formed about a filler opening in the cover 11 and providing a seat for a threaded filler plug 24 fabricated of a suitable plastic material. A substantially conical boss 22 provides an outlet opening for the additive vapor and a housing for a relief valve, and a boss 23 depends from the cover 11 and provides an inlet opening to the container 10 and houses the inlet valve assembly as will be presently described.

The container outlet opening defined by the boss 22 and associated structure is best seen in FIGS. 2, 3, 6

and 3 The boss 22 extends upwardly from the cover and includes a vertical passage 26 therethrough, which is sealed at the top by means of a suitable cap 27. Intermediate the ends of the passage 26 is provided an inwardly extending radial rib 28 defining a seat for a ball valve 29 which is normally seated by gravity to prevent fluid flow through the passage 26 in a downward direction. Above the seat 28, the wall of the passage 26 is provided with two angularly spaced longitudinal ribs 30 for the purpose of preventing the ball valve 29 from closing the outlet opening 31

Above the valve seat 28 within the passage 26 are provided two right-angularly disposed threaded ports to receive fittings 33 and 34 for attaching external conduits for communication with the passage 26 As best seen in FIG. 6, a flexible tube 35 is connected at one end to the fitting 33 secured in the outlet opening 21, the opposite end of which is connected to suction fitting of the engine carburetor. Another flexible conduit 36 is connected at one end to the fitting 34, and the other end is arranged for attachment to the inlet valve assembly which will be presently described.

As best seen in FIGS. 3 and 8, a baffle 40 covers and protects the lower opening of the outlet passage 26 from the ingress of liquid additive during movement of the vehicle on which the inductor unit is mounted. The baffle 40 is a shallow dish-like member, fabricated of a suitable metal for example, including a peripheral radial flange 41 which is provided with suitable openings to receive, with a friction fit, a plurality of depending bosses 42 on the cover 11 for securing the baffle to the under surface thereof. In assembled relation, the flange 41 lies contiguous to the under surface of the cover, and the baffle and cover defines a baffle chamber 43 immediately below the outlet passage 26.

The flange 41 is formed with radial corrugations 44 which may extend partially or completely around the periphery of the baffle and which define, with the under surface of the cover, radial passages providing communication between the baffle chamber 43 and the main chamber of the container It is through these radial passages that the additive vapors flow from the upper portion of the main container chamber into the baffle chamber 43 and the passage 26 Openings or slots 45 are provided in the lowermost portion of the concavo-convex baffle, to permit the draining back into the container 10 of any liquid which may accumulate within the baffle chamber 43 due to condensation or for any other reason The openings 45 are formed to minimize any direct flow opening between the main container chamber and the passage 26 and to deflect any liquid which may tend to enter the baffle chamber through these openings away from the opening of the passage 26

The boss 23 depends from the cover 11 defining an inlet passage 48 through the cover with the upper portion of the passage defining a threaded recess for securing the inlet valve assembly The lower portion of the boss defines a hollow stem 49 to which is connected a manifold assembly to be described

An inlet valve assembly 50, shown in detail in FIG 5, includes a cylindrical housing 51 having a depending hollow stem 52 which is externally threaded to be coupled within the internally threaded recess of the inlet passage 48 When the valve assembly is coupled to the cover 11, a cup-shaped housing 53, having a central opening to accommodate the hollow stem 52, is clamped in inverted relation between the cylindrical housing 51 and the upper surface of the cover 11 In assembled relation, the housing 53 is clamped in sealed relation with the surface of the cover 11 and with the surface of the cylindrical housing 51 to define a sealed chamber enclosing a suitable air filtering material 54 surrounding the hollow stem 52

The stem 52 is provided with one or more radial passages 55 providing communication between the passage 56 of the stem 52 and the filter housing 53 the latter having at least one peripheral inlet port 57 As a result of the vacuum created within the container 10 the air flows thereinto through the inlet port 57, the filter material 54, the radial passages 55 and central passagen 56 of the stem 52, and the inlet passage 48

In FIGS. 3, 4 and 5, is shown a manifold assembly which includes a flexible tube 60 attached to the lower end of the hollow boss stem 49, and connected at its lower end through a T-fitting 61 to an oval shaped manifold 62 which is secured contiguous to the bottom wall of the container 10 The manifold 62 is preferably formed of a flexible tubing, which is provided with a series of orifices 63 through which the air entering through the valve assembly 50 is discharged upwardly through the liquid contents in the container 10 and emerges as a vapor in the upper portion of the container. The manifold is retained on the container bottom by pairs of contiguous upwardly extending bosses 64 which are spaced apart relative to the external dimensions of the manifold tubing to frictionally engage and retain the latter

To control the flow of air entering the container chamber, a valve needle 66 is supported within the stem passage 56 to regulate the amount of air entering the passage from the radial passages 55. The cylindrical housing 51 of the valve assembly 50 is closed by a cap 67 secured in place by a plurality of screws arranged through ears formed on the cap 67 and the upper perimeter of the housing 51, as best shown in FIGS 2 and 5 The needle 66 is arranged concentrically of the housing 51 through a diaphragm 68 which is clamped between the housing 51 and the cap 67 The needle has a threaded portion 69 at its upper end which is threaded through a flanged collar 70 and secured by a nut 71 therebeneath threaded onto the collar 70

A coil spring 72, compressed between the bottom wall of the cylindrical housing 51 and the nut 71 urges the diaphragm 68 into an upper limiting position against the cap 67 The upper end of the needle is provided with a screwdriver slot whereby the needle may be adjusted vertically relative to the collar 70 to position the lower end of the needle relative to the seat defined in the stem passage 56 adjacent to the passages 55, the needle being secured in adjusted positions by a lock nut 73 A close fitting gasket 74 is seated in an annular recess in the upper portion of the stem 52 and embraces the needle 66 to seal the valve assembly vacuum chamber from the remainder of the stem passage 56

Vertical movement of the valve needle 66 is effected by the coaction of the negative or vacuum pressure within the valve assembly vacuum chamber and atmospheric pressure acting on the upper surface

diaphragm 63 and the upward force exerted on the diaphragm by the spring 72. The valve assembly cap 67 is open at the top to expose the upper surface of the diaphragm to atmospheric air, and to permit access to the top of the valve needle 66 for manual adjustment. The cap may be closed by a suitable plastic cover 76 provided with volcanic pores for maintaining atmospheric pressure at the upper surface of the diaphragm.

To produce vacuum within the valve assembly vacuum chamber the wall of the cylindrical housing 51 is provided with a threaded opening for receiving a fitting 77 to which the flexible tubing 36 is attached.

OPERATION

In operation, atmospheric air is drawn into the container chamber by the suction created in the engine carburetor upon the downstroke of the pistons of the vehicle engine. A vacuum is thereby created in the tube 35 which is connected to the carburetor and a vacuum is in turn created within the container chamber as a result of air flowing past the ball valve 29, which lifts from its seat 28 and a vacuum is created within the valve assembly vacuum chamber through the tube 36.

The valve needle 66 is normally urged to its uppermost position within the valve assembly 50 to permit maximum flow of air through the filter housing 53 and through the manifold 62 to effect the vaporization of the additive liquid within the container 10. The additive vapor collects at the upper portion of the chamber to be drawn into the baffle chamber 43 principally through the radial passages defined by the corrugation 44 and the vapor is drawn through the passage 26 past the ball valve 29 which is lifted from its seat 28 by the vapor flow. The vapor is then drawn into the carburetor through the tube 35 for mixture with the fuel-air mixture within the carburetor.

As the vacuum within the valve assembly vacuum chamber increases, the diaphragm 63 is caused to move downward thereby restricting the flow area between the valve needle 66 and the associated valve seat and reducing the flow of air into the container. When the vacuum is reduced, due to acceleration for example, the valve needle 66 lifts to increase the flow of air into the container and thereby increases the production of additive vapor available to the engine.

The ball valve 29 acts as a check valve to prevent excessive pressure build-up within the container chamber. An excessive pressure build-up, such as might be caused by a backfire for example, may rupture the container or break the seal between the container lip 12 and the cover 11. Other less drastic pressure build-ups, but for the check valve 29, would reduce or neutralize the vacuum pressure within the container resulting in inefficiency of the unit.

A feature of the invention is the provision of the baffle means for preventing the additive liquid in the container from flowing into the passage 26 and thereby choking the passage and reducing the effectiveness of the vapor inductor.

Another feature of the invention is the improved inlet valve and filter assembly whereby the filter housing is essentially an integral part of the valve assembly providing for efficient operation of the unit.

Another feature of the invention is the provision of retaining means integral with the container bottom wall for maintaining the vaporizing manifold in the desired relation contiguous to the container bottom wall.

Although the invention has been described with reference to a particular preferred embodiment, changes and modifications will become apparent to those skilled in the art in view of the foregoing description which is intended to be illustrative and not limiting of the invention defined in the claims.

What is claimed is:

1. An inductor for vaporous fuel additives for internal combustion engines having a fuel reservoir and a carburetor, the combination comprising:

a container for a liquid fuel additive and a cover for sealing the container;

a valve assembly including a vacuum chamber means, and including a hollow stem arranged to be secured in an opening in said cover for communication with the interior of said container, a ported seat in said stem, below said vacuum chamber, open to atmosphere,

a manifold disposed adjacent to the bottom of said container to be submerged in the liquid contained therein, and connected to said hollow stem, said manifold having a series of outlet orifices therein whereby to vaporize the liquid in said container by the passage of air therethrough,

a needle in said vacuum chamber extending into said hollow stem and operable with respect to said ported seat, a spring biased diaphragm carrying said needle in said vacuum chamber for actuating said needle with respect to said ported seat,

a vapor outlet passage in said cover opening to the inner wall surface thereof; baffle means on said cover inner wall surface overlying said passage opening, shielding said vapor outlet passage opening from the ingress of the liquid contained in said container; said baffle means comprising a dish shaped member having a peripheral radial flange disposed contiguous to the cover wall surface surrounding said passage, said cover and said dish shaped member having coacting means for readily attaching said member to said cover, said member and said cover defining a chamber directly beneath said outlet passage, said peripheral flange being corrugated to define radial passages communicating said baffle chamber with the container, said dish-shaped member having an opening for draining liquid back to the container,

and a suction tube for connecting said vapor outlet passage and said vacuum chamber to the engine carburetor whereby to conduct vapor to said carburetor and to actuate said diaphragm and said needle.

2. An inductor device as set forth in claim 1,

including an annular housing member coacting with said cover and said valve assembly to define an annular chamber surrounding said stem, said ported seat opening to said annular chamber, inlet port means in a wall of said annular chamber housing member, and filter means disposed in said annular chamber between said inlet port means and the ports of said ported seat.

3. An inductor device as set forth in claim 2

wherein said hollow stem is provided with external threads for threaded engagement with an internally threaded opening in said cover; and wherein said annular housing member is defined by a cup-shaped member clamped between said valve assembly and said cover to define said annular chamber.

4. An inductor device as set forth in claim 1 wherein said manifold is formed of flexible tubing and wherein the bottom wall of said container includes integral bosses extending upwardly therefrom in spaced relation to frictionally engage and retain said tubing.

5. An inductor device as set forth in claim 3 wherein said housing member is fabricated of a thin walled resilient material, and wherein said valve assembly includes a shoulder confronting the adjacent cover surface for engaging the upper periphery of said housing member.

6. An inductor device as set forth in claim 1 including check valve means in said outlet passage for preventing reverse flow into said container.

• • • • •

INSTALLATION INSTRUCTIONS FOR V-70 SUPER VAPOR SYSTEM

EXAMPLE A

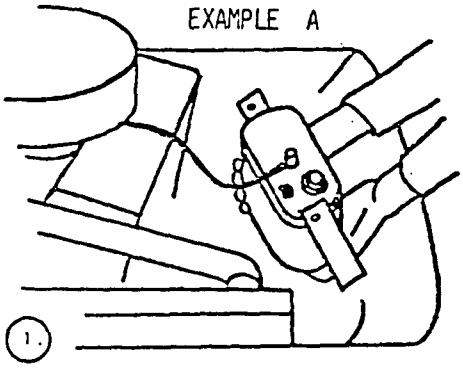

EXAMPLE B

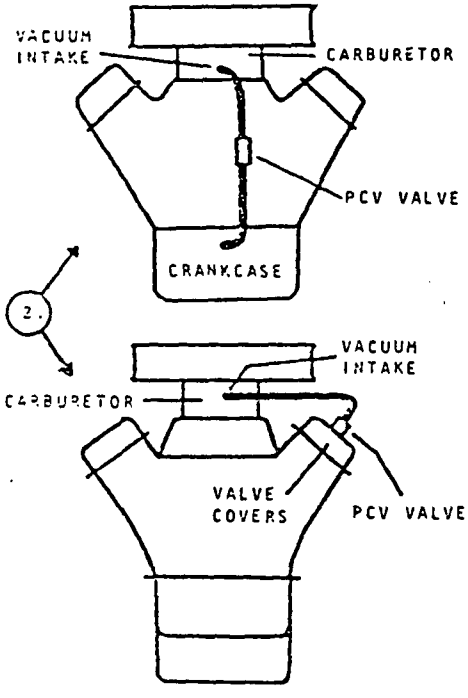

EXAMPLE C

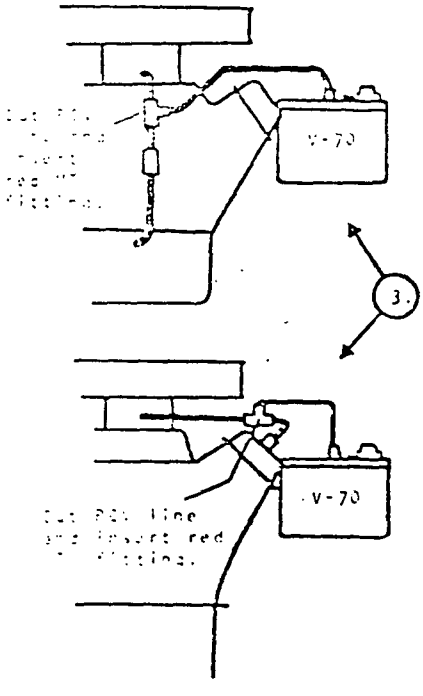

1. It is recommended that the V-70 Unit be installed within the engine compartment (using the universal mounting brackets supplied) where it will not interfere with or come in contact with the engine or any accessory already mounted inside the engine compartment. Install only in a LEVEL position with easy access to the black "Fill" cap and the Automatic Metering Valve. (Example A)

2. The V-70 Unit should be connected to a primary source of vacuum at the base of the automobile carburetor. Most automobiles less than 5 years old are equipped with some type of positive crankcase ventilation system (PCV). This system provides an easy access to a primary vacuum source. All PCV systems have a valve as a component part of these systems. (Example B)

3. Insert red plastic "T" fitting supplied into cut ends of PCV line. This red "T" fitting MUST be inserted between the PCV valve and the carburetor. Insert third outlet of fitting into V-70 hose. Now connect the V-70 hose to V-70 Unit, cutting off any surplus hose not needed. (Example C)

On some new cars the PCV valve is attached to the carburetor or carburetor base and the PCV line attached to this valve. When this occurs, a competent mechanic can supply a threaded "T" which can be inserted between the PCV valve and the carburetor tap, so that the V-70 connecting hose may be attached to the third leg of the "T".

On older cars, because of the wide variations, it is recommended that you have a competent mechanic attach the unit to one of the primary vacuum sources at the base of the carburetor.

Fill the V-70 Unit with FUEL ADDITIVE and water according to directions on side of V-70 Fuel Additive container. Under normal conditions your V-70 SUPER VAPOR POWER UNIT is ready to give you super service.

(Use distilled water, [redacted])

Check PCV hose ends. If aged suggest use of clamps to assure tight, firm connection.

TEST V-70 TO MAKE SURE METERING VALVE IS SET TO GIVE BEST PERFORMANCE

The Automatic Metering Valve is set at the factory; however, it is possible that a small final adjustment may have to be made to compensate for the variation of different engines.

With the engine idling smoothly in neutral there should be a steady stream of air bubbles from the inside of the aerator over almost 90% of its entire length.

To determine that the unit is properly adjusted, first make sure the PCV valve is operating properly. With a warm engine and the Unit connected, induce a load on the engine (set brakes and put the drive selector into 'drive', accelerate the engine slowly, holding the brake to make certain the car remains stationary). As the engine is accelerated the automatic metering valve will open and you will get increased aeration within the Unit. When you stop accelerating the engine (take foot off accelerator), the aeration should drop immediately to the level of aeration obtained with the engine in 'idle'. If this does not happen, have the PCV valve changed or adjusted by a qualified person.

When a vacuum gauge is available, the operation of the PCV valve can be checked, in that the engine should have a vacuum reading of approximately twenty inches of mercury when idling in neutral. If the vacuum is below twenty inches of mercury and the PCV valve is operating properly, check the timing of the automobile. It may need advancing.

With the PCV valve operating properly and the engine idling, loosen the lock nut under the red cap on top of the Automatic Metering Valve while holding the brass needle stationary. Screw the needle down until the aeration from the inside of the aeration tube slows and is not aerating its entire length. Then screw the brass needle out very slowly (without exerting any down pressure on the needle) to the point where you first get aeration over 90% of the length of the aerator. Hold the screw and set the lock nut and replace the red cap.

Manufactured by

[illegible] RESEARCH AND MANUFACTURING COMPANY, INC.
P.O. BOX 435, ENNIS, TEXAS 75119

December 26, 1979

Mr. Richard L. Floch
12900 Preston Road
Suite 715, L.B. 4
Dallas, Texas 75230

Dear Mr. Floch:

This is in response to your September 20, 1979 letter which requested EPA to test the "V-70" vaporizer.

As was explained in the Policy Paper previously sent to you, the EPA does not certify or approve retrofit fuel economy devices. When requested by the the Federal Trade Commission, the EPA Administrator, or the manufacturer of a device, the EPA will evaluate a device. In the case of the manufacturer making the request, we are required to limit EPA testing to a confirmatory role, i.e. testing by the EPA to confirm results obtained by an independent laboratory. Due to the number of such requests and the limitations of our testing facilities, this confirmatory policy is the only practical solution.

A preliminary review of your testing request has been made. While there are several areas that require clarification, the supplied testing data is not sufficient to justify confirmatory testing by the EPA. This letter is written to request more information where required and to [illegible] a test plan which will ascertain the validity of the claims made [illegible] "V-70" fuel economy retrofit device.

A. Areas requiring additional information.

Description of the Device

1. a. Please submit information on the additive you put into the water/additive reservoir. Please indicate the chemical makeup of any hydrocarbon constituents.

2. Please indicate amount of fluid injected per amount of fuel consumed i.e. lb. fluid/ lb. fuel.

3. Please indicate why you believe addition of water vapor to the inlet air will reduce fuel consumption. The actual theory of operation of your device is not explained in your application for evaluation.

4. There are several problems with the test data supplied. These problems, given below, do not allow a proper evaluation of "V-70" Vapor Injector.

   a. The Scott Laboratory Data

      1. This test data was run at a laboratory which is not on our list of recommended laboratories. Scott Labs is not on our list because the laboratory has never been checked out by EPA personnel.

      2. Only HFET cycle tests were run. The Federal emission standards are based on the Federal Test Procedure (FTP). The HFET emission data is not correlatable to the actual FTP regulated emission standards.

      3. Only one HFET was run in each condition. With a 5% test repeatability, the test validity of the 7.8% increase in fuel economy is questionable.

      4. Only one vehicle was tested. Due to the differences in engine/vehicle characteristics it is not possible to extrapolate the tests on one vehicle to all gasoline fueled vehicles.

      5. Test laboratories normally maintain about 70 grains water/lb dry in so as to minimize the humidity correction factor for NOx emissions. We do not understand why Scott Labs would permit testing when the humidity level was 24 grains/lb. dry air.

      6. The FTP and HFET test procedures require the measurement of HC, CO, CO_2 and NOx background levels and these levels are to be subtracted from the bag results. The Scott data indicates only HC background levels were measured.

      7. While a 7.8% increase in fuel economy was noted in the tests, a 22.8% increase in CO was also noted. Such an increase in CO, if realistic, would put many cars over the emission standards.

b. Wayland Baptist College Test Data

1. This office has not heard of that laboratory before. The Wayland Baptist College is not, therefore, to the best of our knowledge, a qualified independent testing laboratory for automotive emission testing.

2. The test procedures used in collecting the data are not described. The units of measurement indicate that conventional equipment and methods were not used.

3. Only two states of operation (1) 1500 RPM in neutral and (2) 1000 RPM in Drive, were tested. This data indicates nothing about transient cycles.

4. This data conflicts with the Scott data which showed an increase in HC and CO.

2. Recommended Test Program to Define Fuel Economy and Emission Effects of "V-70" Vapor Injector.

1. Test Vehicle Selection

Three domestic vehicles with accumulated mileage between 4,000 and 70,000 miles should be chosen. Care should be taken in selecting the vehicles to cover the range of claimed device applicability. (Example; one 8-cylinder, one 6-cylinder and one 4-cylinder).

2. Test Vehicle Inspection and Adjustment Prior to Baseline Testing

a. The vehicles should be set to all manufacturers specifications.
b. Check engine for any malfunctions including a scope checkout. Correct any malfunctions noted.
c. Be sure to check the automatic choke and EGR valve for proper operation. Repair if necessary.
d. Replace spark plugs with vehicle manufacturers recommended parts.
e. Replace air filter and PCV valve with vehicle manufacturers recommended parts.
f. Change engine oil and filter. Use appropriate manufacturer recommended products.
g. Record all settings, adjustments, readings, maintenance and vehicle data. Include this data in the test reports supplied to EPA.
h. Close control must be kept of these vehicles during the test program. All maintenance, adjustments, mileage accumulation, modifications, and testing must be described, dated, and initialed by the testing laboratory personnel.

3. Baseline Testing

a. Two (2) 1975 Federal Test Procedures (FTP) and two (2) Highway Fuel Economy Tests (HFET) should be performed on each vehicle.

b. Documentation of all tests, including void tests must be supplied by the testing laboratory.

c. No vehicle modifications, or adjustments should be made after baseline testing is begun.

4. Device Installation

The "V-70" Vapor Injector should be installed on all three vehicles per the installation instructions supplied to the EPA with the application for evaluation (see enclosure) with the following item modification to avoid confusing the test results:

a. Part 3, Paragraph 6-Do the optimization routine on all 3 vehicles.

b. Part 3 Paragraph 7- Do not replace the PCV valve (this was done previously)

c. Part 3 Paragraph 8- Do not advance the timing.

5. Device Testing; With Parameters Adjusted

Upon completion of device installation, each vehicle should be tested twice using the 1975 Federal Test Procedure and twice using the Highway Fuel Economy Test. These tests give the effects of the device with fluid.

6. Device Testing; without fluid

Remove all of the fluid from the "V-70" Vapor Injector System reservoir. Make no other vehicle modifications. Test the vehicle in this "dry" condition two (2) times on the 1975 Federal Test Procedure and two (2) times using the Highway Fuel Economy Test. These tests give the effects of the device when operated dry.

7. Data Reporting

The results of the vehicle inspections, maintenance, and tests should be tabulated and sent to Mr. F. Peter Hutchins, 2565 Plymouth Road, Ann Arbor, Michigan 48105.

8. Notification of Intent

Please notify Mr. Hutchins (313-668-4340) as to which independent laboratory will be doing the testing and the expected beginning and completion dates of the testing program prior to initiation of the testing.

The results of this testing program should clearly define the benefits or penalties of the "V-70 Vapor Injector" for both emissions and fuel economy. The data would provide EPA the opportunity to make a clear evaluation of the device. A list of laboratories which should be capable of performing these tests was included in the "EPA Policy Paper on Testing of Retrofit Devices" previously sent to you.

The tests run on the Mark II device were run at the request of the Administrator. The V-70 Vapor Injector does not appear to be very dissimilar from the Mark II. Therefore, testing of the V-70 Vapor Injector as a "new technology" device is, unfortunately, not indicated. Upon completion of the suggested test program, confirmatory testing at the EPA laboratory in Ann Arbor will be performed if so indicated by the data.

If you have any questions concerning this testing program, please contact Mr. F. Peter Hutchins of my staff at 313-668-4340.

Sincerely,

Charles L. Gray, Director
Emission Control Technology Division

ECTD:TALB:GRAY:mc:X325:2565PlymouthRd:12/26/79

Evaluation of the SCATPAC Device

July 1973

Emission Control Technology Division
Office of Air and Water Programs
Environmental Protection Agency

Background

The ECT Division was contacted by a representative of Cedar Rapids Engineering Company, of Cedar Rapids, Iowa, concerning their retrofit device for automobiles called SCATPAC. After being shown test results performed by Olson Laboratories which showed significant reductions of CO, HC, and NOx on a vehicle with the device installed (as compared to baseline), the ECTD agreed to perform testing of the device on an EPA owned vehicle.

Device Tested

SCATPAC is a vacuum vapor induction system which is attached to the PCV line. Manifold vacuum draws air through a liquid solution of undisclosed chemicals into the base of the carburetor. Vapors from the solution are thus introduced into the manifold. The device comes with all necessary components for the retrofitting to any vehicle with a PCV line and installation time takes less than fifteen minutes.

Test Program

A 1970 Plymouth Valiant 225 CID from the EPA fleet was used for the test program. Four emission tests* were conducted, two without the device and two with the device installed. Before any testing, the vehicle was tuned to the manufacturer's specifications for timing and idle rpm. Idle CO, 1.75%, was not changed. Two tests were then conducted in this stock configuration to be used as the baseline results. The SCATPAC device was then installed and idle CO was adjusted to 1.75% so that the enleanment effect from bleeding the vapors into the PCV line did not influence the emissions (it had dropped to about 1.50%). The vehicle was then tested twice more.

Test Results

The test results are presented in the Appendix of this report, and are summarized below. In addition to emission results, fuel economy was calculated for each test using a carbon balance technique.

*All testing was performed according to the 1975 Federal Test Procedure as outlined in the November 15, 1972, Federal Register for light duty vehicles.

APPENDIX

	Test No.	HC gpm	CO gpm	CO_2 gpm	NOx gpm	Fuel Economy mpg
Baseline	16-530	2.07	29.12	357.5	5.44	21.3
	16-531	2.12	29.16	354.1	5.74	21.4
	Avg.	2.10	29.14	355.8	5.59	21.3
SCATPAC	16-542	2.17	33.98	352.1	5.31	21.2
	16-547	1.94	30.17	341.3	4.73	21.8
	Avg.	2.05	32.07	346.7	5.02	21.5

☆ U.S. GOVERNMENT PRINTING OFFICE: 1979- 651-112/0107

Emission Results From An Automobile Using the Frantz Vapor Injector

September 1971

John C. Thomson
Office of Air Programs
ENVIRONMENTAL PROTECTION AGENCY

Background

As part of a continuing evaluation of retrofit devices for used cars, emission tests on the Frantz Vapor Injector system was run. Emission reductions for hydrocarbon (HC) of up to 37%, carbon monoxide (CO) of up to 44%, and nitrogen oxide of up to 35% were claimed. The device was installed on a vehicle supplied by a Louisville, Kentucky newspaper at the newspaper's request. The installer was not told of the purpose of the installation and it is assumed that this was a typical conversion.

Device

The device tested was a vapor injector system produced by the Sky Corporation, Stockton, California. This system added a mixture of air and a vaporized chemical to the positive crankcase ventilation line with the amount of vapor-air mixture dependent on the manifold vacuum.

Test Program

The device was tested on a 1968 Ford Falcon equipped with a 200 cubic-inch six cylinder engine and manual transmission. This engine was also equipped with the original air injection pump. Two different test procedures were used in evaluating the emissions from this device and the vehicle was tested under three differing conditions. The first four tests were with the vapor injector as installed by Frantz and the recommended fluid used. Two of these used the 1972 Federal emission test procedure (LA4) which is a non-repetative self-weighting test using the constand volume sampling system. This procedure required the collection of a representative sample of the total exhaust from the vehicle. The second two tests used the 1971 Federal emission test procedure (7-mode) which is a continuous tailpipe monitoring test using a repetative driving cycle. In this test certain portions of the exhaust are measured and weighted according to the amount of driving typical under these conditions. For both sets of tests, carbon monoxide (CO) and carbon dioxide (CO_2) were measured using nondispersive infrared (NDIR). For the 7-mode tests hydrocarbon (HC) and oxides of nitrogen (NOx) were analyzed using NDIR also. In the LA4 tests HC was measured using flame ionization detector (FID) and NOx using chemiluminesence. The amount of fuel used for each test was measured and reported in kilograms. A single 7-mode test using the injector with the fluid removed was run to determine the effect of the fluid.

One 7-mode and one LA4 were run after removing the vapor injector and returning the vehicle to baseline condition.

Table I

Emission Results from a 1968 Ford Falcon

	HC gpm	CO gpm	NOx gpm	Fuel used (total kg)
		(with vapor injector installed)		
LA4	2.9	27	4.0	1.4
LA4	2.3	28	2.0	1.3
7-mode	2.5	25	4.0	1.1
7-mode	3.1	27	3.9	1.1
		(with vapor injector-fluid removed)		
7-mode	2.3	24	2.7	1.1
		(with vapor injector removed - baseline)		
LA4	3.5	38	4.0	1.6
7-mode	2.7	28	3.7	1.1

Background

The Emission Control Technology Division (ECTD) was contacted by the General Services Administration (GSA) concerning a vapor injection device for use with automobile engines. The device is called the Econo-Mist and is a product of the FAP Corporation of Albuquerque, New Mexico. GSA had received information that the Econo-Mist reduced hydrocarbon and carbon monoxide emissions and increased fuel economy. At the request of GSA, ECTD agreed to test the device. A sample of the device was brought to the EPA laboratory in Ann Arbor, Michigan by FAP Corporation personnel on January 13, 1975.

The Environmental Protection Agency receives information about many devices for which emission reduction or fuel economy improvement claims are made. In some cases, both claims are made for a single device. In most cases, these devices are being recommended or promoted for retrofit to existing vehicles although some represent advanced systems for meeting future standards.

The EPA is interested in evaluating the validity of the claims for all such devices, because of the obvious benefits to the Nation of identifying devices that live up to their claims. For that reason the EPA invites proponents of such devices to provide to the EPA complete technical data on the device's principle of operation, together with test data on the device made by independent laboratories. In those cases in which review by EPA technical staff suggests that the data submitted holds promise of confirming the claims made for the device, confirmatory tests of the device are scheduled at the EPA Emissions Laboratory at Ann Arbor, Michigan. The results of all such confirmatory test projects are set forth in a series of Technology Assessment and Evaluation Reports, of which this report is one.

The conclusions drawn from the EPA confirmatory tests are necessarily of limited applicability. A complete evaluation of the effectiveness of an emission control system in achieving its claimed performance improvements on the many different types of vehicles that are in actual use requires a much larger sample of test vehicles than is economically feasible in the confirmatory test projects conducted by EPA. 1/ For promising devices it is necessary that more extensive test programs be carried out.

1/ See Federal Register 38 FR 11334, 3/27/74, for a description of the test protocols proposed for definitive evaluations of the effectiveness of retrofit devices.

EPA-AA-TAEB 75-19

An Evaluation of the Econo-Mist Device

March 1975

Technology Assessment and Evaluation Branch
Emission Control Technology Division
Office of Mobile Source Air Pollution Control
Environmental Protection Agency

ECONO-MIST

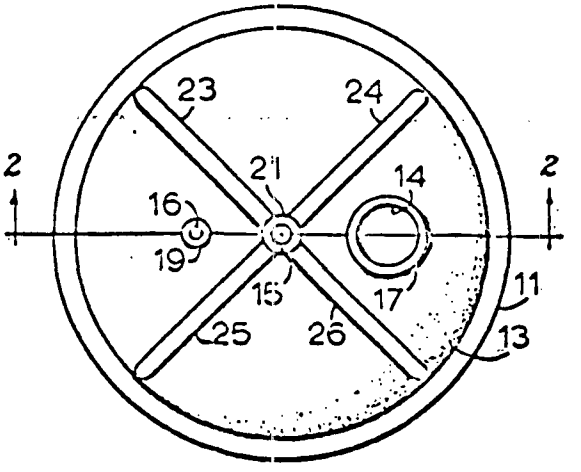

Fig. 1

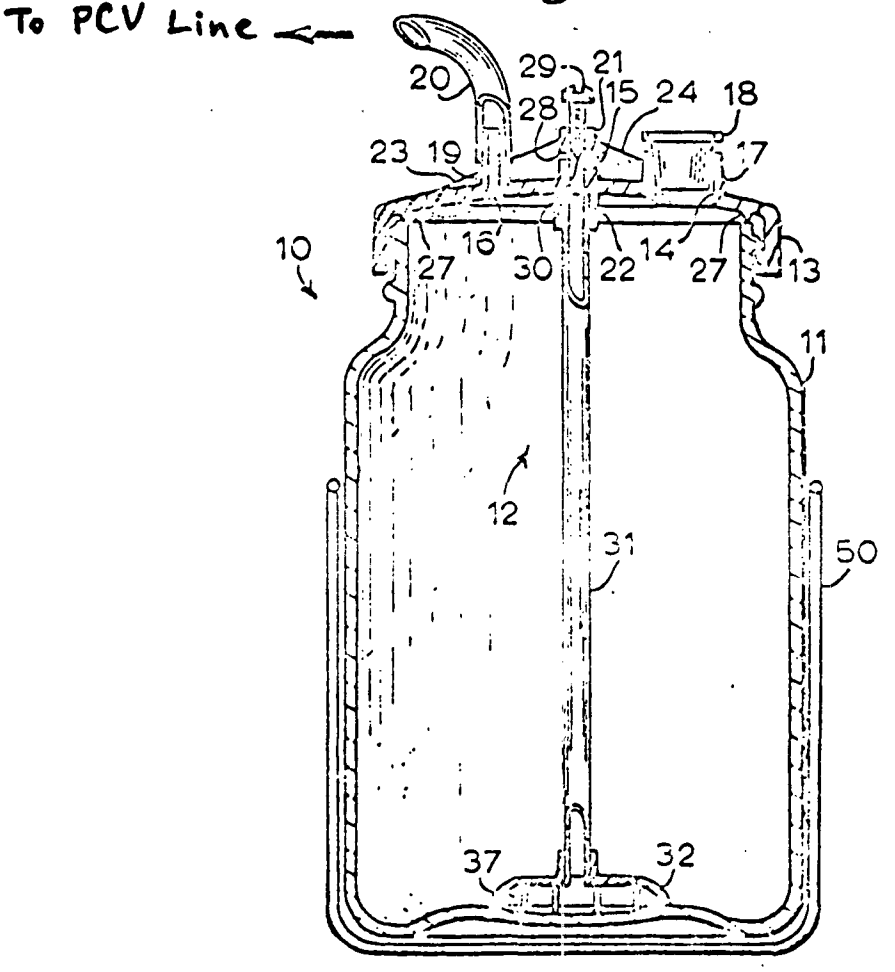

Fig. 2

TEST VEHICLE DESCRIPTION

Chassis model year/make - 1970 Plymouth Valiant
Emission control system - Engine Modification

Engine

type	4 stroke Otto Cycle, OHV, in-line 6 cyl.
bore x stroke	3.40 x 4.12 in./86.36 x 104.78 mm
displacement	225 CID/3688
compression ratio	8.4:1
maximum power @ rpm	145 hp/108 kW @ 4000 rpm
fuel metering	1-V carburetor
fuel requirement	94 RON gasoline

Drive Train

transmission type	3 speed automatic
final drive ratio	2.76:1

Chassis

type	unitized construction, front engine, rear wheel drive
tire size	FR 78-14
curb weight	2920 lbs/1325 kg
inertia weight	3000 lbs
passenger capacity	5

Emission Control System

basic type	positive crankcase ventilation, engine modification

mileage on vehicle at start of test program: 17,850

Conclusions

The changes in emission and fuel economy which were noted on the test vehicle are attributed to the enleanment effect of the Econo-Mist device and might be matched by bleeding more air to the carburetor. This could be accomplished by leaning out the idle mixture and/or the primary jets, or increasing the flow through the PCV line.

Accumulating over 300 miles on the device did not yield any improvements compared to the results when the device was initially installed.

Appendix

Table I

'75 FTP Composite Results
Mass Emissions, grams per mile
Fuel Economy, miles per gallon

Test Type	HC	CO	CO_2	NOx	Fuel Economy
Baselines (no device)	1.89	13.5	422	5.54	19.8
	1.76	10.4	419	6.32	20.1
Device Baselines	1.61	9.33	397	6.54	21.3
	1.52	9.72	389	5.49	21.7
Device with 300 miles	1.64	9.57	396	5.54	21.3
	1.50	6.82	410	6.08	20.8
	1.67	11.0	398	6.41	21.1
Device with no fluid	1.55	8.45	404	5.33	21.0
	1.65	10.4	411	6.58	20.5

Table III

EPA Highway Cycle
Emissions Results and Fuel Economy
Mass Emissions, grams per mile
Fuel Economy, miles per gallon

Test Type	HC	CO	CO_2	NOx	mpg
Baselines (no device)	.94	2.28	312.4	7.01	27.8
	.92	2.34	313.0	6.74	27.8
Device Baselines	.89	2.01	296.3	7.09	29.4
	.84	2.17	305.5	6.17	28.5
Device with 300 miles	.90	1.86	305.8	6.23	28.5
	.92	1.87	309.6	7.10	28.1
Device with no fluid	.95	2.05	309.5	6.72	28.1
	.98	2.27	305.5	7.75	28.4

73-22 RBM

Evaluation of the Turbo Vapor Injector

March 1973

Test and Evaluation Branch
Emission Control Technology Division
Environmental Protection Agency

Background

TVI Marketing Inc. of Lexington, Michigan, requested that EPA test their Turbo Vapor Injector device. Results of testing at Olsen Laboratories showed substantial reductions in carbon monoxide (CO) and hydrocarbon (HC) emissions. The Test and Evaluation Branch scheduled testing of the device.

Device

The Turbo Vapor Injector is a vacuum vapor induction system which is attached to the PCV line. Air is drawn through an alcohol-and-water based solution into the base of the carburetor. The device comes with instructions so that it can be retrofitted to any car including older vehicles without PCV lines.

Test Program

A 1970 Plymouth Valiant, 225 CID, from the EPA fleet was used for the program. Seven tests were conducted, two without the device (baseline), three with the device properly attached, and then two more with the fluid bottle empty so that only air was drawn into the PCV line. These last two tests were conducted at the request of the sales representative who delivered the device to the EPA laboratory.

Prior to the testing, the Valiant's carburetor was set at 2% CO and 650 rpm at idle, and was not adjusted again throughout the testing. All testing was performed in accordance with the 1975 Federal Test Procedure (FTP). Full details of this procedure are found in the November 15, 1972 Federal Register, Volume 37, Number 221, Part II.

All tests were conducted using the standard dynamometer inertia loading for the Valiant which is 3,000 pounds. Test fuel was Indolene Clear (lead-free standard test fuel).

Test Results

The test results are presented in the Appendix of this report. In addition to emission results, fuel economy was determined using a carbon balance method. Emission and fuel consumption results are summarized as follows:

APPENDIX

TVI Test Program - 1975 Federal Test Procedure

Baseline

Test No.	HC gpm	CO gpm	CO_2 gpm	NOx gpm	Fuel Consumption mpg
16-330	2.27	33.55	352.7	4.36	20.97
16-333	2.19	31.19	406.2	5.78	18.9
AVERAGE	2.23	32.37	379.4	5.07	19.9

TVI Device

Test No.	HC gpm	CO gpm	CO_2 gpm	NOx gpm	Fuel Consumption mpg
16-338	2.23	28.01	417.5	6.30	18.6
16-341	1.99	25.82	420.2	6.44	18.81
16-344	2.17	26.59	411.1	6.50	18.93
AVERAGE	2.13	26.81	416.2	6.41	18.82

TVI Device (Bottle Empty)

Test No.	HC gpm	CO gpm	CO_2 gpm	NOx gpm	Fuel Consumption mpg
16-347	2.15	29.48	397.5	5.79	19.4
16-350	1.97	26.86	413.3	6.45	19.0
AVERAGE	2.06	28.17	405.4	6.12	19.2

☆ U.S. GOVERNMENT PRINTING OFFICE: 1979- 651-112/0096

The Mark II Vapor Injector:
An Air-Vapor Bleed Device Evaluated

January 1976

Technology Assessment and Evaluation Branch
Emission Control Technology Division
Office of Mobile Source Air Pollution Control
Environmental Protection Agency

Background

The APO Mark II Vapor Injector marketed in the United States by APO of America, Inc., Dallas, Texas is essentially an induction system air-vapor bleed device. It is the fifth device of this basic type to be tested by TAEB in the past five years.[1,2,3,4] The general conclusions of the four previous air-vapor bleed device tests were that fuel economy improvements if any, were small and were attributed to enleanment of the air fuel mixture as opposed to the effects of the added vapors. Similarly exhaust emissions changes were minor and were typical of the results of enleanment of air-fuel ratios near stoichiometry. The Mark II contains several variations on the basic vapor bleed device theme which could alter its performance relative to other devices of this type. In light of these variations and an interest in the Mark II exhibited by the public and some sectors of the government, EPA evaluated the device.

The Environmental Protection Agency receives information about many devices for which emission reduction or fuel economy improvement claims are made. In some cases, both claims are made for a single device. In most cases, these devices are being recommended or promoted for retrofit to existing vehicles although some represent advanced systems for meeting future standards.

The EPA is interested in evaluating the validity of the claims for all such devices, because of the obvious benefits to the Nation of identifying devices that live up to their claims. For that reason the EPA invites proponents of such devices to provide to the EPA complete technical data on the device's principle of operation, together with test data on the device made by independent laboratories. In those cases in which review by EPA technical staff suggests that the data submitted hold promise of confirming the claims made for the device, confirmatory tests of the device are scheduled at the EPA Emissions Laboratory at Ann Arbor, Michigan. The results of all such confirmatory test projects are set forth in a series of Technology Assessment and Evaluation Reports, of which this report is one.

The conclusions drawn from the EPA confirmatory tests are necessarily of limited applicability. A complete evaluation of the effectiveness of an emission control system in achieving its claimed performance improvements on the many different types of vehicles that are in actual use requires a much larger sample of test vehicles than is economically feasible in the confirmatory test projects conducted by EPA.[5] For promising devices it is necessary that more extensive test programs be carried out.

The conclusions from the EPA confirmatory tests can be considered to be quantitatively valid only for the specific type of vehicle used in the EPA confirmatory test program. Although it is reasonable to extrapolate the results from the EPA confirmatory test to other types of

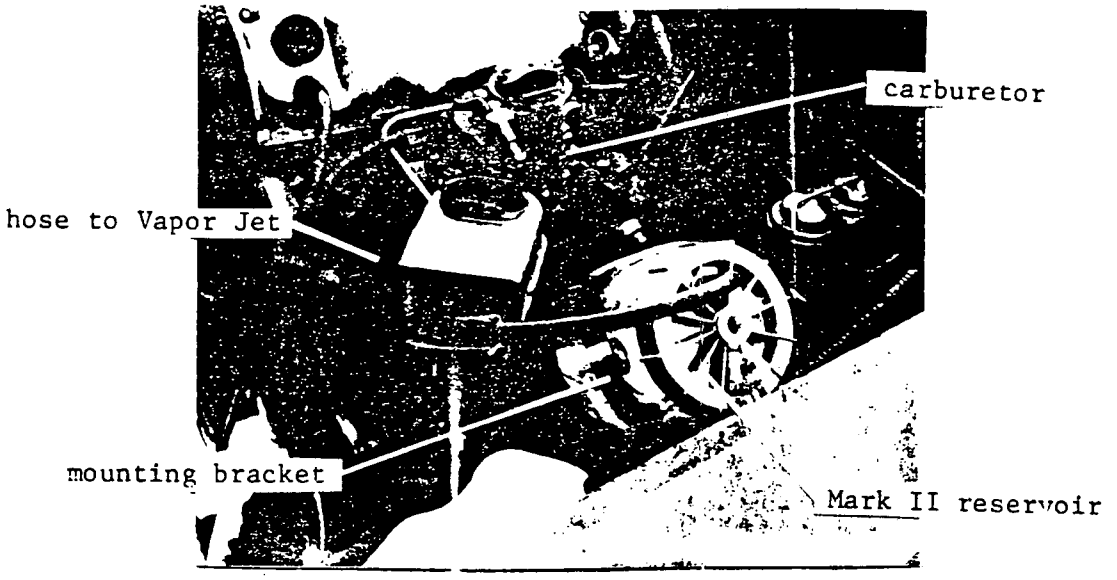

Figure 1 Mark II installation on 1971 Vega (air cleaner removed).

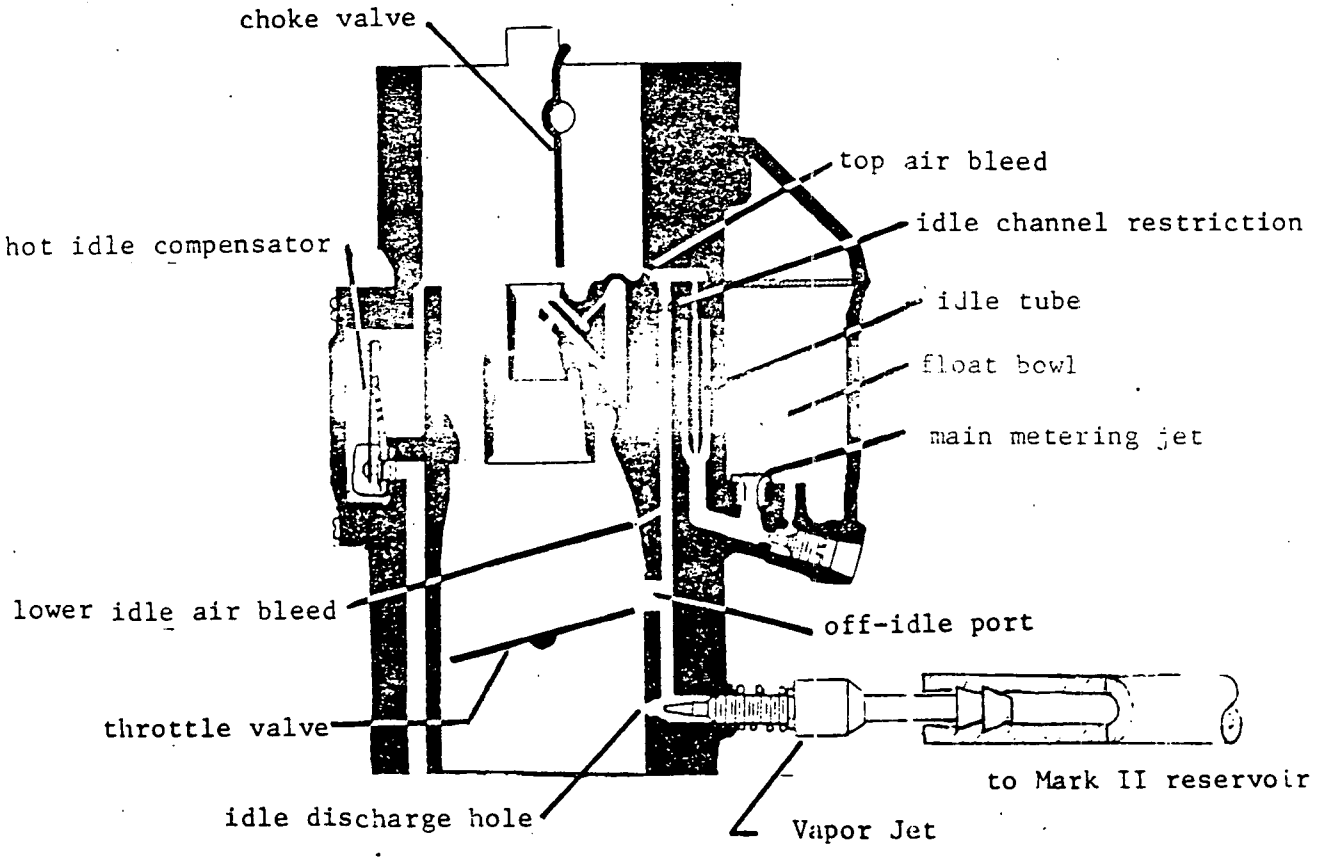

Figure 2 Schematic of Vega carburetor showing idle circuitry with Mark II Vapor Jet installed.

According to Mr. Allen Best, the technical advisor of APO, the composition of the Econo Mix by volume is 65% methanol, 34% acetone, and 1% propylene glycol. The benefits of the vapors of Econo Mix-water mixture claimed in the Mark II owner's manual are a decrease in required octane number of the gasoline used, increased fuel economy, increased power, elimination of carbon deposits, extension of engine life, and reduction of exhaust emissions. EPA evaluates devices in terms of their effects on vehicle emissions, fuel economy, and occasionally performance. Additions of methanol and water to gasoline are known to increase the octane number of fuel and additions of methanol under certain conditions to increase power. Therefore, it was felt desirable to conduct a preliminary evaluation of the possible benefits of the APO device based on information available in the technical literature concerning the various constituents of the APO fluid and measurements of the operating variables of the device. This evaluation is presented in Appendix I.

Test Procedure

Exhaust emissions tests were conducted according to the 1975 Federal Test Procedure ('75 FTP), described in the Federal Register of November 15, 1972, and the EPA Highway Fuel Economy Test (HFET), described in the Federal Register, Volume 39, Number 200, October 15, 1974. Both of these tests are conducted on a chassis dynamometer and employ the Constant Volume Sampling (CVS) procedure, which gives exhaust emissions of HC, CO, NO_x and CO_2 in grams per mile. Fuel economy is calculated by the carbon balance method. The fuel used was Indolene unleaded 96 RON gasoline.

The vehicle was tested in three different configurations: baseline, with the Mark II installed but without any fluid in the jar, and with the Mark II functioning with fluid. The second configuration was tested in order to separate the effect of the fluid vapors from the effect of the air bleed.

Before the baseline testing, the vehicle was tuned to manufacturer's specifications. The carburetor idle mixture adjustment was adjusted to lean best idle, which for this vehicle resulted in a 0.2% idle CO. The idle mixture was adjusted to lean best idle after the installation of the Mark II in each configuration tested. In both cases the idle CO was again 0.2%.

The test schedule plan was two '75 FTP's and two HFET's for each of the following test conditions:

1. Baseline
2. Mark II installed but without fluid
3. Mark II with fluid
4. Mark II with fluid after 1500 miles of operation on the durability driving schedule described in the Federal Register Vol. 37, No. 221, November 15, 1972
5. Mark II without fluid after mileage accumulation
6. Baseline after mileage accumulation

Figure 3
'75 FTP Composite Fuel Economies
by individual test

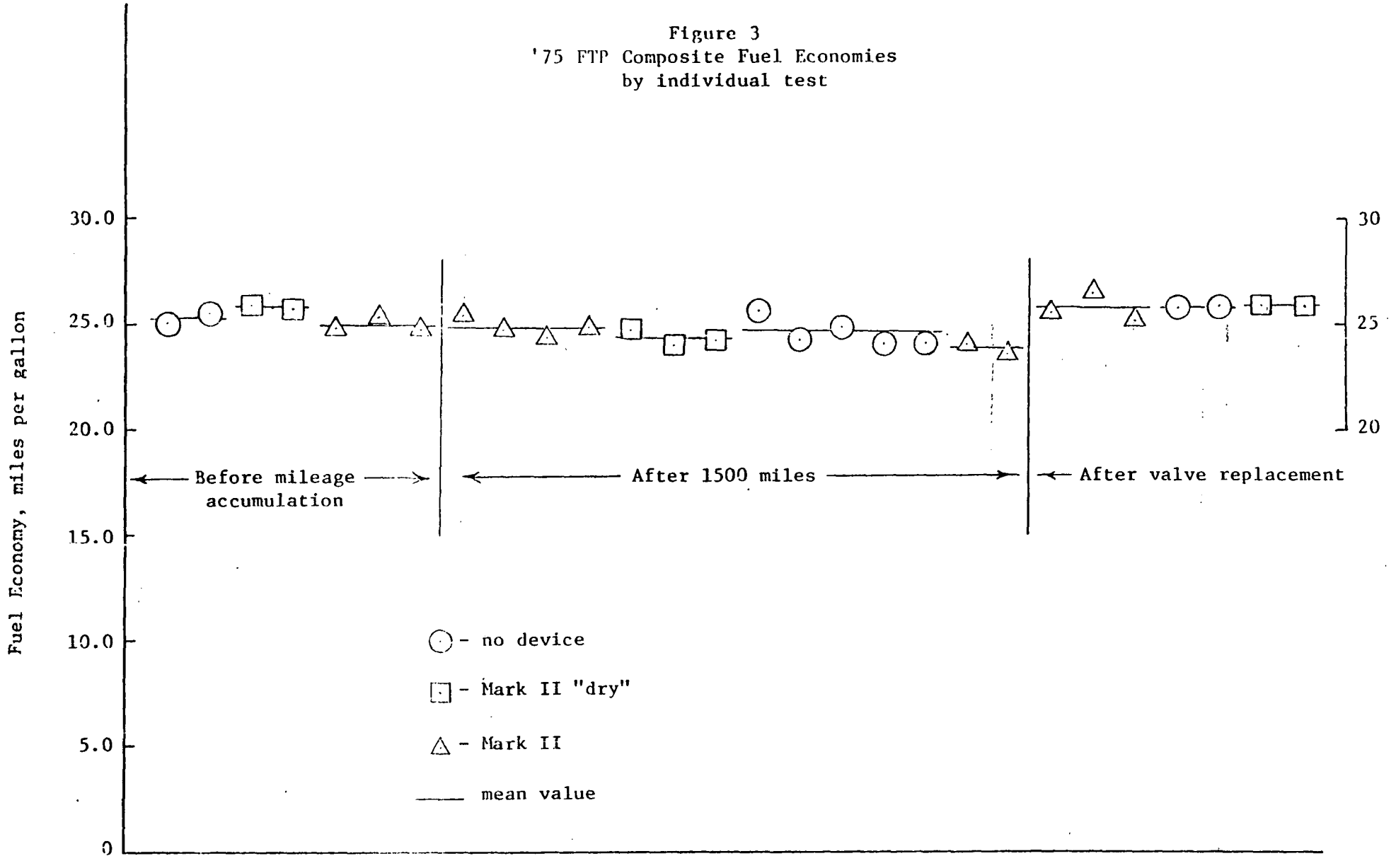

Figure 5
'75 FTP Composite Emission
by individual test

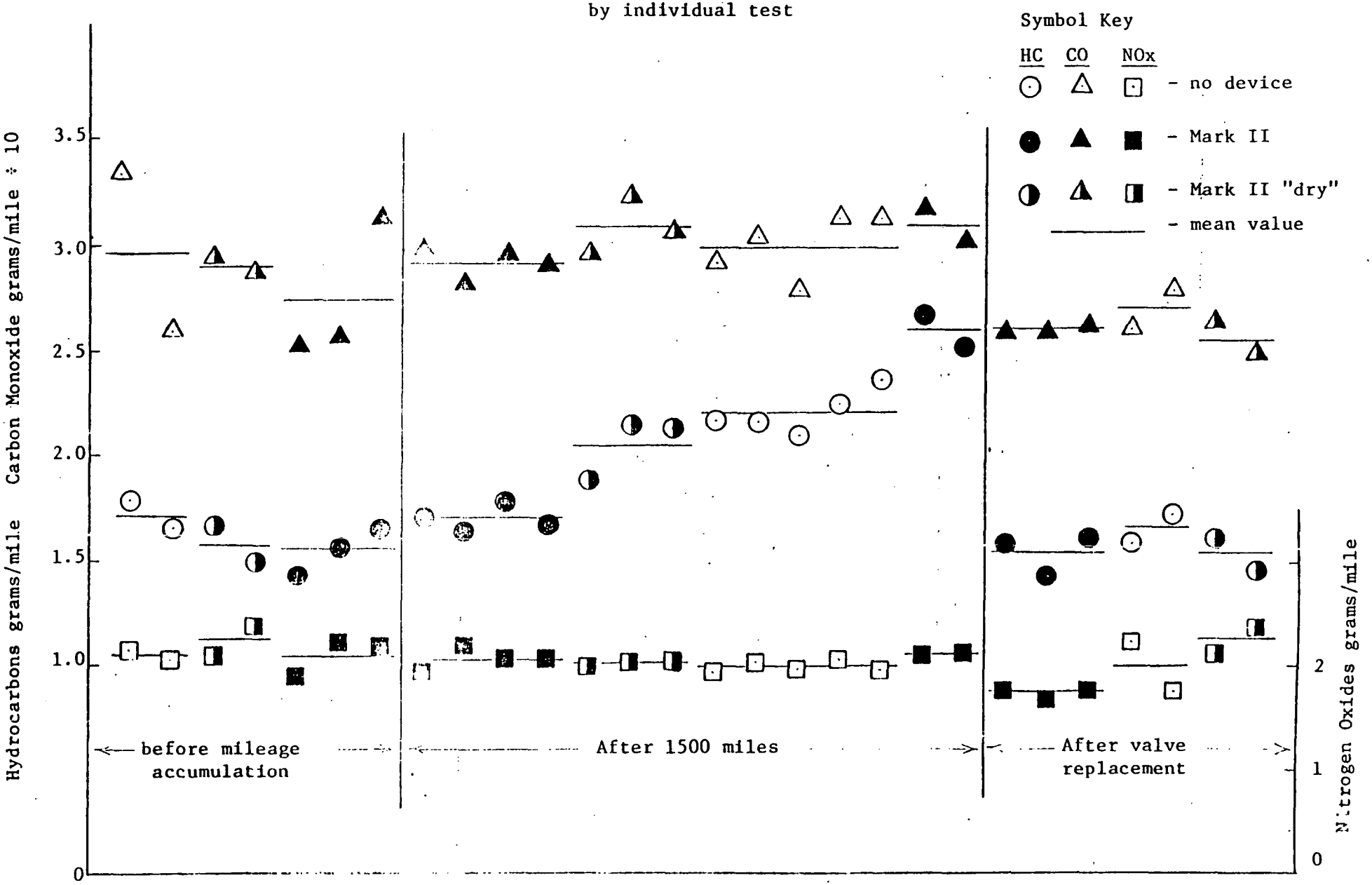

Table 3

Highway Cycle Results
Mass emissions, grams per mile (gram per kilometer)
Fuel economy, miles per gallon (liters per 100 kilometer)

Test configuration	HC		CO		CO_2		NOx		Fuel economy		Temp. °F	Rel. hum. %	Baro. P. " Hg
Before mileage accumulation													
Mark II	0.91	(0.57)	8.97	(5.57)	207	(129)	3.55	(2.21)	39.6	(5.94)	68.0	76	28.57
"	0.88	(0.55)	8.40	(5.22)	205	(127)	3.32	(2.06)	40.1	(5.87)	68.0	61	28.50
"	0.88	(0.55)	9.16	(5.69)	210	(131)	3.37	(2.09)	39.1	(6.02)	68.0	61	28.48
Mark II "dry"	0.90	(0.56)	8.10	(5.03)	211	(131)	3.33	(2.07)	39.2	(6.00)	65.5	64	28.46
"	0.91	(0.57)	8.12	(5.05)	210	(131)	3.32	(2.06)	39.3	(5.99)	66.0	52	28.47
"	0.90	(0.56)	8.46	(5.26)	210	(131)	3.40	(2.11)	39.2	(6.00)	66.0	58	28.46
no device	0.88	(0.55)	8.30	(5.16)	210	(131)	3.41	(2.12)	39.3	(5.99)	68.0	55	28.48
"	0.88	(0.55)	8.31	(5.16)	206	(128)	3.36	(2.09)	39.9	(5.90)	65.0	52	28.48
"	0.88	(0.55)	8.02	(4.98)	206	(128)	3.38	(2.10)	40.0	(5.88)	66.0	58	28.44
Mark II	0.75	(0.47)	5.84	(3.63)	222	(138)	3.86)	(2.40)	37.9	(6.21)	65.5	45	[illegible].34
"	0.86	(0.53)	7.55	(4.69)	221	(137)	3.77	(2.34)	37.7	(6.24)	69.0	55	[illegible].83
After 1500 miles													
Mark II	0.89	(0.55)	9.66	(6.00)	213	(132)	3.32	(2.06)	38.4	(6.13)	70.5	42	[illegible].91
"	0.87	(0.54)	7.88	(4.90)	223	(139)	3.66	(2.27)	37.2	(6.33)	72.0	44	29.09
"	0.92	(0.57)	8.60	(5.34)	227	(141)	3.64	(2.26)	36.5	(6.45)	66.5	51	29.01
"	0.91	(0.57)	8.75	(5.44)	217	(135)	3.32	(2.06)	38.0	(6.19)	65.0	52	28.84
Mark II "dry"	0.89	(0.55)	7.78	(4.84)	222	(138)	3.44	(2.14)	37.4	(6.29)	70.5	47	29.16
"	0.96	(0.60)	9.62	(5.98)	222	(138)	3.46	(2.15)	37.0	(6.36)	68.0	53	28.98
"	1.00	(0.62)	10.10	(6.28)	222	(138)	3.25	(2.02)	36.8	(6.39)	71.0	53	28.99
no device	0.93	(0.58)	7.15	(4.44)	204	(127)	3.06	(1.90)	40.6	(5.80)	69.0	47	29.18
"	1.00	(0.62)	8.30	(5.16)	224	(139)	3.38	(2.10)	36.9	(6.38)	71.0	46	28.95
"	1.02	(0.63)	8.66	(5.38)	216	(134)	3.04	(1.89)	38.2	(6.16)	72.5	43	28.70
"	1.03	(0.64)	10.18	(6.33)	225	(140)	3.55	(2.21)	36.4	(6.46)	70.0	46	28.75
"	1.13	(0.70)	8.55	(5.31)	222	(138)	3.55	(2.21)	37.2	(6.35)	70.0	45	28.93
"	1.01	(0.63)	6.92	(4.30)	220	(137)	3.55	(2.21)	37.9	(6.21)	73.0	44	28.23
After valve replacement													
Mark II	0.81	(0.50)	9.10	(5.66)	236	(147)	3.07	(1.91)	35.1	(6.70)	77.0	56	29.12
"	0.88	(0.55)	8.01	(4.98)	211	(131)	3.04	(1.89)	39.2	(6.00)	71.0	49	29.07
"	0.36	(0.22)	7.31	(4.54)	185	(115)	2.45	(1.52)	44.8	(5.25)	71.0	46	29.04
"	0.75	(0.47)	7.70	(4.79)	226	(140)	3.40	(2.11)	36.9	(6.38)	70.0	46	29.21
"	0.83	(0.52)	7.92	(4.92)	205	(127)	2.94	(1.83)	40.3	(5.84)	69.0	51	29.13
"	0.90	(0.56)	8.89	(5.53)	208	(129)	2.93	(1.82)	39.4	(5.97)	67.5	55	29.03
no device	0.89	(0.55)	7.97	(4.95)	207	(129)	3.55	(2.21)	39.9	(5.90)	70.0	76	29.08
"	0.93	(0.58)	9.57	(5.95)	207	(129)	2.85	(1.77)	39.4	(5.97)	67.5	48	28.87
Mark II "dry"	0.88	(0.55)	8.31	(5.16)	216	(134)	3.51	(2.18)	38.2	(6.16)	74.0	33	29.05
"	0.88	(0.55)	7.90	(4.91)	215	(134)	3.56	(2.21)	38.5	(6.11)	74.0	31	29.05

Table 4

'75 FTP Fuel Economy Statistics

Test configuration	Sample size	Mean mpg	Standard dev. mpg	Standard dev. %	Percent improvement*	t*	Significantly different at 90% confidence
Before mileage accumulation							
no device	2	25.3	±0.3	±1.1	-	-	-
Mark II	3	24.9	±0.3	±1.3	-1.6	+1.21	No
Mark II "dry"	2	25.8	±0.1	±0.3	+2.0	-1.38	No
After 2000 miles							
no device	2	25.8	±0.1	±0.3	+2.0	-1.38	No
Mark II	3	25.8	±0.7	±2.6	+2.0	-1.52	No
Mark II "dry"	2	25.9	±0.0	±0.0	+2.4	-1.66	No

* All percent improvement and t tests conducted with no device before mileage accumulation used as the base sample. The t tests were calculated using an overall standard deviation of ±0.36 mpg for the '75 FTP fuel economy.

Table 5

Highway Cycle Fuel Economy Statistics

Test configuration	Sample size	Mean mpg	Standard dev. mpg	Standard dev. %	Percent improvement*	t*	Significantly different at 90% confidence
Before mileage accumulation							
no device	3	39.7	±0.4	±1.0	-	-	-
Mark II	5	38.9	±1.0	±2.7	-2.1	+1.72	No
Mark II "dry"	3	39.2	±0.1	±0.1	-1.3	+0.96	No
After 2000 miles							
no device	2	39.6	±0.4	±0.9	-0.3	+0.17	No
Mark II	3	39.6	±0.6	±1.5	-0.3	+0.19	No
Mark II "dry"	2	38.4	±0.2	±0.6	-3.3	+2.23	No

* All percent improvement and t tests conducted with no device before mileage accumulation used as the base sample. The t tests were calculated using an overall standard deviation of ±0.64 mpg for the Highway Cycle fuel economy.

Table 7 gives the levels of change that were necessary to be considered significantly different at 90% confidence with the observed test variability and different sample sizes. This shows that a sample size of 7 is required to be able to detect with 90% confidence a difference equal to the standard deviation. Sample sizes of this order can be obtained in this analysis if all the before mileage accumulation tests are grouped and compared to all the after 2000 miles tests. This grouping should reveal any overall shifts in emissions or fuel economy with mileage accumulation and thus reveal any long term benefit of the Mark II. Table 8 shows the results of this grouping for the emissions over the '75 FTP and for the fuel economies over the '75 FTP and HFET. Under the column titled "Comparative Statistics" are given the percent change in the group means, the t test score and the resolution of the same t test null hypothesis as used in Tables 4, 5, and 6.

The CO and NOx emissions showed reductions of 7% and 8% respectively but just missed being significantly different from test-to-test variability. The '75 FTP fuel economy improvement of 2% was found significantly different. From this there appeared to be a slight but real improvement in the 75 FTP fuel economy after mileage accumulation with the Mark II. There was no corresponding improvement in the HFET fuel economy.

Any fuel economy benefits that would result from the alteration of the combustion chamber deposit, would be expected to be reflected in both the 75 FTP and HFET. Thus it was difficult to envision a long term effect of the Mark II that would tend to improve only the low speed stop-and-go type driving fuel economy.

Table 9 shows the combined city/highway fuel economy of the test vehicle in the different configurations tested. Also shown is the fuel consumed and its cost over a period of one year of average driving, assuming the annual mileage of 10,000 miles and gasoline cost of $.60/gallon. The Mark II after mileage accumulation showed a savings of $2.58 over the no-device configuration before mileage accumulation. The price of the Mark II with Vapor Jet is listed at $47.90. The owner's manual recommends refilling the Mark II with Econo Mix ($1.95 for a 15 oz. can) every 90 days, yielding an annual operating expense of $7.80. Thus, at least for the test vehicle the Mark II does not appear economically justifiable.

Table 9

Configuration	Composite* fuel economy mpg	Gasoline used** per year gallons	Gasoline*** cost per year
Before mileage accumulation			
no device	30.2	331.1	$198.66
Mark II	29.7	336.7	$202.02
Mark II "dry"	30.4	328.9	$194.34
After 2000 miles			
no device	30.6	326.8	$196.08
Mark II	30.6	326.8	$196.08
Mark II "dry"	30.3	330.0	$198.00

Performance of the vehicle was not specifically examined, but the vehicle was unable to maintain the hard acceleration occurring from 180 to 200 seconds into the transient cycle of the '75 FTP. Figure 6 shows this section of the driving cycle, with the cross hatched area representing the difference between the prescribed speed time trace (upper curve) and the vehicle's actual speed time trace. The "WOT" on the trace was written by the driver indicating that the throttle was wide open. Had any power improvements occurred, the vehicle would have been better able to follow the prescribed trace and the cross hatched area would have been smaller. Since no noticeable changes in this area were produced by any of the configurations tested, it was concluded that no noticeable changes in vehicle performance occurred.

* Composite fuel economy $= \dfrac{1}{\dfrac{.55}{\text{'75 FTP F.E.}} + \dfrac{.45}{\text{Highway F.E.}}}$

** Annual mileage 10,000 miles

*** Gasoline cost of $.60/gallon

The test results show that all configurations tested yielded the same emissions and fuel economy within test-to-test variability. By combining all tests before mileage accumulation and comparing them to all the after-2000 mile tests, a significant 2% increase in '75 FTP fuel economy was observed with mileage accumulation. There was not a corresponding increase in HFET fuel economy. Throughout the testing sequence no improvements in vehicle performance were observed.

Based on the results from the test car, the operating expenses of the Mark II exceeded the savings in fuel by a factor of three. It is the conclusion of the analysis that the purchase price and operating expenses of the Mark II do not appear to be justified by the insignificant changes in emission levels and minor fuel economy improvement produced by the Mark II.

Appendix I

Preliminary analysis of Mark II Vapor Injector

The purpose of this preliminary analysis is to determine the approximate concentration of the various vapors in the carbureted air fuel mixture, and to compare them to concentrations, reported in the literature, known to produce measurable effects.

Mark II Econo Mix fluid is 65% methanol, 34% acetone and 1% propylene glycol by volume. This is mixed one part to two parts water by volume. As only the vapors of this mixture are used and the vapor pressure of propylene glycol is low (less than 1 mm of Hg at 100°F), we will not include it in our analysis.

Water vapor is normally added to air-fuel mixtures because it is present in the air. The effects of increasing humidity are fairly well known. It lowers the octane requirement of the engine, i.e. it acts as a knock suppressor. Potter et al[7] found that at 70°F a change in relative humidity from 30 to 60 percent decreased the required motor octane number (MON) of the fuel for an automobile engine from 88 to 86. Ingamello, Stone, Gerber and Ungelman[7] found studying eight automobiles that the effects of humidity changes on required octane number was linear with the equation:

$$\Delta \text{ O.N.} = - K \, \Delta H \text{ (grains/lb absolute humidity)}$$

K was observed to vary from 0.04 to 0.09 for the cars tested with an average of 0.045. This is in good agreement with Potter, yielding a 1.4 O.N. decrease versus the 2 from Potter for the 30% change in relative humidity at 70°F.

As a diluent, water vapor also decreases the charge density and indicated thermal efficiency. Slight power improvement is possible with increasing humidity if the engine was previously spark limited and can take advantage of the increased octane number by increasing spark advance and/or increasing charge density (opening the throttle more for a normally aspirated engine).

Nichols, El-Messiri and Newhall[9] investigated the effects of inlet manifold water injection on oxides of nitrogen emissions. They found that at air-fuel ratios near stoichiometry, 30 to 50 percent reduction of nitric oxide emissions were observed with a water to fuel weight ratio (W/F) of 0.50. The effects of water injection on percent reduction of NOx appeared linear in the range of W/F = 0 - 0.5. The effectiveness of water in this regard was attributed primarily to its high latent heat of vaporization resulting in lower peak combustion temperatures.

Obert[10] investigated injections of liquid water and water-alcohol mixtures into the intake manifold as a means of knock suppression. While effective, it required large amounts of water, around 50% of the fuel volume. This technique has been used for airplane engines during take-off. Much of the effectiveness of this method has been attributed by Obert to the high latent heat of vaporization of the liquids.

we will use an air flow of 1.4 cubic feet per hour, reservoir temperature of 100°F and an absolute pressure in the bottle of 20 in. Hg in our calculations below.

Calculation of weight of air, water, methanol and acetone delivered per hour by the Mark II:

Assumptions

1. Air entering bottle is at 80°F and at 50% relative humidity.

2. Fluid mixture obeys Raoult's Law, i.e. each component's equilibrium vapor pressure above the liquid is equal to the vapor pressure of the pure component's equilibrium vapor pressure at that temperature times the mole fraction of that component in the liquid mixture.

3. The vapor-liquid concentrations are in equilibrium after bubbling.

Given the Econo Mix composition of 65% methanol, 34% acetone and 1% propylene glycol, mixed with 2 parts water; the resulting mixture per litre is:

water	667 ml
methanol	217 ml
acetone	113 ml
propylene glycol	3 ml
	1000 ml

Component	Density g/litre	Molec. Wt.	Moles/litre pure component	Mole fraction in mixture
water	1.00	18.0	55.6	.842
methanol	0.79	32.0	24.7	.122
acetone	0.79	58.1	13.6	.035
propylene glycol	1.04	76.1	13.7	.001

Absolute pressure in bottle is 20 in. Hg or 510 mm Hg.

Component	Mole fraction in liquid	Vapor pressure of pure component at 100°F in mm Hg	Partial pressure above mixture	Mole fraction in air vapor mixture
water	.842	49	43.3	.085
methanol	.122	230	28.1	.055
acetone	.035	380	13.5	.026
propylene glycol	.001	1	0.0	.000
air	---	---	425.	.834
Total			510	1.000

Thus we see that considering the vapor components contributed by the Mark II as part of the fuel, they represent a very small fraction: only 0.30% on the Highway test, 0.37% on the '75 FTP and 0.80% at idle. This checks well with the observed consumption of 550 ml of reservoir fluid during the accumulation of 1600 miles. With a composite fuel economy of 30.4 mpg, 52 gallons or 200 litres of gasoline were used yielding a 0.28% by volume addition of the reservoir fluid.

Water addition due to the Mark II amounted to at most 0.22% and of that, slightly over 50% was the original humidity of the air entering the Mark II. Assuming an overall stoichiometric air fuel ratio, this amounts to a 1.4* grains of water addition per pound of incoming air. This is equivalent to a humidity change of a little less than one relative humidity point at 80°F. Using Ingamells et al[7] equation for the effect of humidity on octane requirement we can expect a decrease of 0.06 O.N. due to the water contributed by the Mark II. This small change in O.N. is not measurable. Using the linear relationship of water addition to percent reduction of NOx observed by Nichols et al[9], we would expect a 0.2 to 0.3 percent reduction in NOx emissions due to the water additions of the Mark II if this water were in a liquid state when it entered the intake manifold. Since the Mark II adds only water vapor the benefits of the high latent heat of vaporization are lost. Thus the actual effect would be smaller than the 0.2 to 0.3 percent reduction above, which is already way below our test-to-test variability. Most important of all however is the fact that normal day-to-day weather variations produce humidity changes that dwarf those produced by the Mark II.

The maximum methanol addition of 0.32 volume percent is an order of magnitude smaller than reported additions of 5% that produced a .1 to 1.5 octane number change. Assuming that the effects of methanol addition to gasoline are linear with the percentage of volume addition, we can estimate the emissions changes over the '75 FTP from the Wigg and Lunt[12] data. That is a 15% by volume addition of methanol to gasoline resulted in a 36% increase in HC, a 50% decrease in CO, and a 24% decrease in NOx. Thus we might expect a 0.8% increase in HC, a 1.1% decrease in CO, and a 0.5% decrease in NOx. Again with the Mark II the effect of the high latent heat of vaporization of methanol is lost so the effect on NOx would be less. These small changes are not measurable on the '75 FTP because of the test-to-test variability. Methanol additions of 0.25% are routinely added to production winter gasolines by some oil companies[14] to prevent ice crystal formation in the fuel. This small addition is not known to have any measurable effect on any engine variable.

---

* $.0022 \text{ vol. fraction } H_2O \times \frac{1.00 \text{ density } H_2O}{.739 \text{ density of gasoline}} \times \frac{1\text{b. gasoline}}{15 \text{ lb. air}} \times$ 7000 grains/lb. = 1.4 grains H_2O/lb. air.

Since the fuel economies of this report are calculated by the carbon balance method the carbon added by the Mark II is counted. In the calculation, a carbon-to-hydrogen ratio and a density typical of gasoline are used. This creates an error if a gasoline is used that is not typical.

For the '75 FTP we can determine the error in the calculated fuel economy which resulted when 0.28% of the fuel was not typical gasoline but was acetone and methanol.

Fuel	1 Density grams/gallon	2 (Grams of Carbon) (Gram molec. wt. of fuel)	1 x 2	3 Volume fraction	1 x 2 x 3
Gasoline	2798	.866	2423	.9972	2416
Methanol	2990	.375	1120	.0015	1.7
Acetone	2990	.620	1850	.0013	2.4
			Total		2420

$$\text{Percent error} = \left(1 - \frac{2420}{2423}\right) \times 100 = 0.12\%$$

That is the calculated fuel economy is 0.12% higher than actuality. At 25.0 mpg this error amounts to .030 mpg, or beyond the significance to which we report fuel economy.

If the methanol and acetone were not considered as fuel during the '75 FTP, the calculated fuel economy would be $\left(1 - \frac{2416}{2423}\right) \times 100 = 0.29\%$ higher than actuality.

For 25.0 mpg this amounts to .072 mpg. This then is the magnitude of change we would expect by ignoring the fuel content of the Mark II vapors, measuring only the volume of gasoline consumed and dividing it into the miles traveled, as the typical motorist might do. Even though this is technically incorrect it still represents a very minor change in fuel economy.

Not discussed above is the possible long term effects of the device such as altered combustion chamber deposit quality or quantity. In evaluating aftermarket devices, TAEB is not particularly concerned with these changes unless they affect the emissions, fuel economy, or performance of the vehicle.

SET 1808 01 0579

TECHNICAL REPORT
ON
FUEL ECONOMY TEST
FOR
V-70 SUPER VAPOR POWER DEVICE

Prepared For:

Mr. Elwood Ross
Product Promotions Inc.
Route 3, P. O. Box 516
Roanoke, Texas 76262

May 3, 1979

SCOTT ENVIRONMENTAL TECHNOLOGY, INC.
Plumsteadville, Pennsylvania 18949

Scott Environmental Technology Inc.

SET 1808 01 0579

1.0 INTRODUCTION

On April 18, 1979, Scott Environmental Technology, Inc. performed two preliminary highway fuel economy tests under contract to Product Promotions Inc. (Sponsor). The tests were performed on a late model automobile to determine the fuel saving and pollutant reducing capabilities of "The V-70 Super Vapor Power" device. These preliminary tests were also performed to determine the feasibility of further testing.

The test procedure used was that developed by the Environmental Protection Agency (EPA) which simulates non-urban (open highway) driving conditions. The vehicle was tested first in the stock condition to provide "baseline" exhaust emission and fuel economy data. The vehicle was then retested for exhaust emissions and fuel economy after the device was installed for a direct comparison between the results of the two tests. The remaining sections of this report describe the test vehicle, device, test procedures and the results obtained.

2.0 TEST VEHICLE DESCRIPTION

The fuel economy tests were performed on a 1978 Chevrolet Monte Carlo (VIN: 1Z3748B451044) equipped with a 305 cubic inch V-8 engine and 2 barrel carburetor, automatic transmission and air conditioning. It was also equipped with the standard General Motors emission control equipment. Mileage of the vehicle prior to the baseline test was 28772.6.

3.0 DESCRIPTION OF DEVICE

The Sponsor's device, called "The V-70 Super Vapor Power" consists of a "Lexan Plastic Reservoir" on which is mounted a metal plate cover. This cover has incorporated in it, a "hose and check valve connection", a "metering device" and a "two stage aerator". Also included with this device are two one-quart containers of a liquid containing methanol (percentage of methanol unknown by Scott), one of which is poured into the reservoir along with two quarts of distilled water.

SET 1808 01 0579

A vacuum source is required for the operation of this device. The source of vacuum recommended by the manufacturer is the primary intake manifold vacuum port that is normally connected to the positive crankcase ventilation (PCV) valve with a flexible hose. This hose was severed at its midpoint and two of the three connection points of the plastic tee (supplied with the device) was connected to each of the severed ends of the hose. Using this vacuum source, air is drawn in through the "metering device", creating a bubbling or aeration action in the liquid solution contained in the reservoir by the "two-stage aerator".

The fluid mixture in the reservoir, called "V-70 Vapor Fuel Additive, is a specially prepared formula of oxygen-bearing petroleum distillates which when added with water produces the vapor" for this system of vapor injection.

4.0 DESCRIPTION OF TEST PROCEDURES

The procedure utilized for the fuel economy tests was the 1976 Federal "Highway Fuel Economy Test" (HFET). This test procedure (Figure 1.0) was developed by the EPA specifically to assess fuel economy of a vehicle during non-urban driving. The HFET was constructed from actual speed-versus-time traces generated by an instrumented test vehicle driven over, and averaged from, a variety of non-urban roads which preserves the non-steady-state characteristics of real-world driving. The average speed during the test is 48.2 mph and the test length is 10.2 miles approximating average non-urban trip length. The testing was performed on Scotts chassis dynamometer where, through the use of flywheels and a water brake, the loads that the vehicle would actually encounter on the road are reproduced. The vehicle's exhaust is collected, diluted and thoroughly mixed with filtered background air, and a known constant volume flow is obtained by the use of a positive displacement pump. This procedure is known as Constant Volume Sampling (CVS). The constant volume sampler is used to collect the exhaust emissions during the test. A portion of the exhaust gas mixture is collected in Tedlar bags for

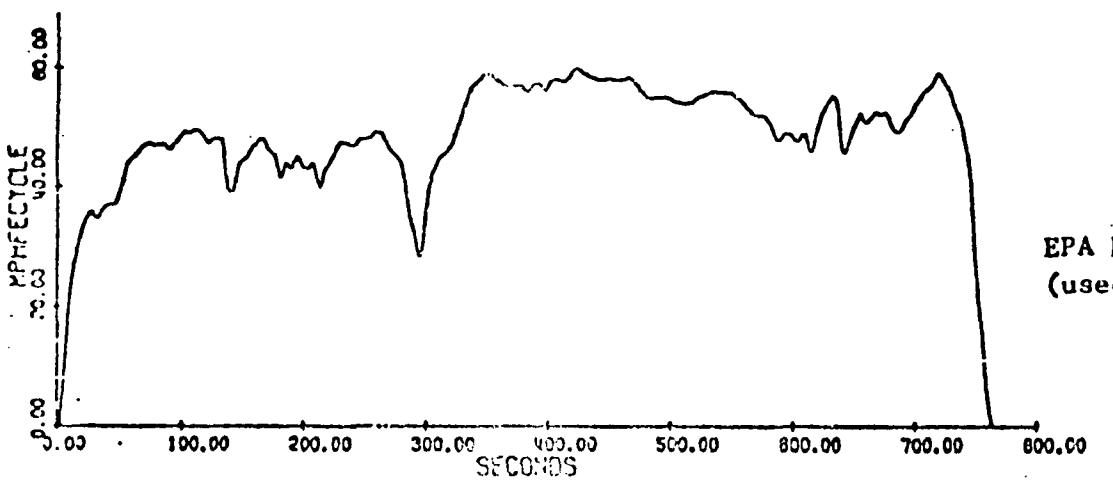

EPA Highway Cycle
(used in Highway Fuel Economy Test)

FIGURE 1 OFFICIAL FEDERAL TEST CYCLE

subsequent analysis. After the sample has been collected, it is transferred to analyzers where the concentrations of hydrocarbons (HC), carbon monoxide (CO), carbon dioxide (CO_2) and oxides of nitrogen (NO_x) in the sample bag are determined. The analyzers provided for the determination of HC concentrations by flame ionization detector (FID), CO and CO_2 concentrations by non-dispersive infrared (NDIR) analysis, and NO_x concentrations by chemiluminescence (CL) analysis.

The initial or baseline test was performed with the vehicle in its normal, or stock configuration. An inertia weight of 3500 pounds was selected on the chassis dynamometer, the vehicle accelerated up to, and stabilized at, 50 mph and the road load adjusted to the EPA specified setting of 12.3. The vehicle was decelerated to 0 mph (idle) and the HFET was performed. The vehicle was operated over two (2) complete cycles. The first cycle being only a warm-up for the second cycle which is used for the exhaust measurements.

After completion of the baseline test, Scott personnel installed the Sponsor's device following the instructions supplied with it. No adjustments were made to the engine or emission control systems other than installing the tee fitting in the PCV valve vacuum line.

The vehicle was tested the second time with the device installed following the same procedures as during the baseline test.

5.0 CALCULATIONS

The concentrations of HC, CO, CO_2 and NO_x are obtained by subtracting the background levels of the gases from those measured in the sample bags. The resultant values are referred to as corrected concentrations. The grams per mile figures are obtained from calculations using the corrected concentrations and the total volume flow during each of the three test phases to arrive at a mass value for each pollutant (HC, CO, CO_2 and NO_x). Once the mass emissions for each test phase are known, the emissions in grams per mile are calculated using the following formula:

SET 1808 01 0579

$$Y_{wm} = (0.43\ Y_{ct} + 0.57Y_{ht} + Y_s) \div 7.5$$

where

Y_{wm} = weighted mass emissions of each pollutant, i.e. HC, CO or NO_x in grams per vehicle mile.

Y_{ct} = mass emissions as calculated from the "transient" phase of the cold start test, in grams per test phase.

Y_{ht} = mass emissions as calculated from the "transient" phase of the hot start test, in grams per test phase.

Y_s = mass emissions as calculated from the "stabilized" phase of the cold start test, in grams per test phase.

The cold start and hot start bags are weighted 0.43 and 0.57 respectively.

Detailed explanations of the calculations can be found in the Federal Register.

6.0 SUMMARY

Exhaust emission concentrations as collected in the integrated bag samples, were calculated using appropriate instrument calibration factors. This "raw" concentration data was then converted to grams of pollutant per test mile (based on a 10.242 mile test). This data, including all measured parameters used in the mass emission computations for the HFET, is included in Tables 1.0 and 2.0.

Fuel economy for each test was calculated using the procedure outlined earlier in Federal Register Volume 41, Number 218, Part 600 "Fuel Economy of Motor Vehicles", November 10, 1976. The urban fuel consumption rates for each test are included at the bottom of Tables 1.0 and 2.0.

The data presented in Table 3.0 summarizes the vehicle exhaust emission and fuel economy tests performed. The exhaust emissions are presented in grams per mile (GPM) for total hydrocarbon (HC), carbon monoxide (CO) and oxides of nitrogen (NO_x). Fuel economy measurements are shown in miles per gallon (MPG).

SET 1808 01 0579

7.0 DISCUSSION

The data in Summary Table 3.0 show that the Sponsor's "V-70 Super Power" device improved the fuel economy of the vehicle for the highway economy test by 7.8% but it also increased the hydrocarbons and carbon monoxide emissions by 3.6% and 22.8% respectively as compared to the baseline test.

The tests described in this report indicate that the device produced improved fuel economy from the test vehicle. However, great care must be taken in interpreting results obtained from any tests involving a single vehicle. The data cannot be extrapolated to estimate the effects of the device on other vehicles or on the overall vehicle population. Valid conclusions regarding the general effectiveness of this device cannot be rendered until additional tests on representative vehicles are performed.

To fully determine the efficiency of this device, Scott recommends further tests consisting of at least:

1. Five FTP's and HFET's before and after device installation on the same automobile.

or 2. Accumulate mileage on original test car to determine if device shows improvement with time.

or 3. Item number 2 of the SET Proposal No. 0112-03-2179-15 of April 6, 1979.

or 4. All of the above.

Scott Environmental Technology Inc.
PLUMSTEADVILLE, PA. 18949 PHONE: 215-766-8861 TWX: 510-665-9344

TABLE 1.0

HIGHWAY FUEL ECONOMY

EXHAUST EMISSION DATA SHEET

Vehicle	1978 Monte Carlo	Odometer:		Date	4/18/79
VIN	1Z3748B451044	Finish	28795.9	Project	1808-01
License	PA 3H0-400	Start	28777.3	Run	1
Trans.	Automatic	Miles	--	Device	Baseline
Carb.	1 bbls. 2	Idle rpm	500 (D)	Dyn. Load	12.3 RHP @ 50 MPH
Engine	V-8 CID 305	BIT	4°BTDC	Dyn. Inertia	3500#
Analyst	D. Gulick	Driver	S. Stranick	Calculator	D. Gulick

Dry Bulb Temp., F	73	Barometric Press., mm Hg	748.07
Wet Bulb Temp., F	52	CVS Pump Press., mm Hg	15.24
Gr. Water/Lb. Dry Air	24	(P) Sample Press., mm Hg	732.83
(K) Factor	0.8066	(V) CVS Pump Disp., CFR	0.3107
(T) Sample Temp., R	576	(N) CVS Pump Revolutions	13769

DILUTE EXHAUST MEASUREMENTS

COMPONENT		PVN/TM	FACTOR	GRAMS/MILE	
ppm HC dil.	96.33				
ppm HC Air	4.98				
ppm HC exh.	91.35	531.42211	11.348×10^{-6}	0.55	HC
ppm CO exh.	1037	531.42211	22.905×10^{-6}	12.62	CO
% CO_2 exh.	1.81	531.42211	36.022×10^{-2}	346.49	CO_2
ppm NO	--				
ppm NO_2	--				
ppm NO_x	72.65				
(ppm NO_x) (K)	58.60	531.42211	37.628×10^{-6}	1.17	NO_x
MPG	24.114				

Scott Environmental Technology Inc.
PLUMSTEADVILLE, PA. 18949 PHONE: 215-766-8861 TWX: 510-665-9344

TABLE 2.0

HIGHWAY FUEL ECONOMY

EXHAUST EMISSION DATA SHEET

Vehicle	1978 Chevrolet Monte Carlo	Odometer:		Date	4/18/79
VIN	1Z3748B451044	Finish	28816.4	Project	1808-01
License	PA 3H0-400	Start	28797.9	Run	2
Trans.	Automatic	Miles	--	Device	V-70 Vaporizer
Carb.	1 bbls. 2	Idle rpm	500 (D)	Dyn. Load	12.3 RHP @ 50 MPH
Engine	V-8 CID 305	BIT	4° BTDC	Dyn. Inertia	3500#
Analyst	D. Gulick	Driver	S. Stranick	Calculator	D. Gulick

Dry Bulb Temp., F	73	Barometric Press., mm Hg	748.07
Wet Bulb Temp., F	52	CVS Pump Press., mm Hg	15.24
Gr. Water/Lb. Dry Air	24	(P) Sample Press., mm Hg	732.83
(K) Factor	0.8066	(V) CVS Pump Disp., CFR	0.3107
(T) Sample Temp., R	578	(N) CVS Pump Revolutions	13791

DILUTE EXHAUST MEASUREMENTS

COMPONENT		PVN/TM	FACTOR	GRAMS/MILE	
ppm HC dil.	99.98				
ppm HC Air	5.67				
ppm HC exh.	94.31	530.42944	11.349×10^{-6}	0.57	HC
ppm CO exh.	1276	530.42944	22.905×10^{-6}	15.50	CO
CO_2 exh.	1.65	530.42944	36.022×10^{-2}	315.27	CO_2
ppm NO	--				
ppm NO_2	--				
ppm NO_x	68.69				
(ppm NO_x) (K)	55.41	530.42944	37.628×10^{-6}	1.11	NO_x
PG	25.99				

SET 1808 01 0579

TABLE 3.0

SUMMARY OF PRELIMINARY FUEL ECONOMY TEST RESULTS

Test No.	Test Type	Fuel Economy (MPG)	HC (GPM)	CO (GPM)	NO_x (GPM)
1	No device (Baseline)	24.11	0.55	12.62	1.17
2	Device (V-70 Vapor Power)	25.99	0.57	15.50	1.11
Percent Change		+7.8%	+3.6%	+22.8%	-5.1%

WAYLAND BAPTIST COLLEGE

Plainview, Texas 79072

Department of Chemistry

March 24, 1972

Mr. Virgil A. Archer, President
General Magnum, Inc.
265 Garden Mall, Exchange Park
P. O. Box 45440
Dallas, Texas 75245

Dear Mr. Archer:

Accompanying this letter you will please find the results, given in summary form, of my chemical analysis of the two Exhaust Emission Samples which were taken March 22. These samples were taken after the V-70 had been installed on the vehicle and represent the effect of such installation.

You will also find, by way of comparison, the results of samples, taken on February 20, prior to the installation of the V-70. I believe that these results will show a considerable decrease in pollutants has been achieved as a result of the installation of the V-70.

I certify that all work was done by me.

Thanking you for this opportunity to be of service, I am,

Yours very truly,

James C. Cox, Jr.

James C. Cox, Jr., Ph.D., LL.B.
Professor of Chemistry

Dr. James C. Cox, Jr., Head, Department of Chemistry, Wayland Baptist College

Education: B. S. summa cum laude (Chem., Math), W. Va. Wesleyan College, 1940
M. S. (organic chemistry), University of Delaware, 1947
Ph.D. (physical organic chemistry), University of Delaware, 1949
LL.B. (honors), University of Maryland, 1955
Advanced Study: Washington College of Law, American University, George Washington University

Research Fellowships: DuPont Fellow, 1948-1949
Carnegie Fellow, 1949-1951
Texas Fellow, 1959-1964

Consultant: DuPont, Texaco, Continental Oil, Cities Service, Gulf States Utilities, Anderson Chemical Co.

Lectureships: Texas Academy of Science Visiting Lecturer, 1961-1963
National Science Foundation Lecturer, 1961, 1963

Professorships: University of Delaware, 1946-1949
Wesleyan, 1949-1951 (Dept. Head)
Middle Tennessee State University, summer, 1950 (Visiting Professor)
U. S. Naval Academy, 1951-1955
Lamar University, 1955-1965 (and Research Director)
University of Baghdad, IRAQ, 1966-1967 (Visiting Professor)
Oral Roberts University, 1965-1968 (Dept. Head and Division Director
Wayland Baptist College, 1968-present (Dept. Head)

Research Experience: DuPont, 1940-1943 (nylon synthesis, acids synthesis, analysis)
Anderson Chemical C., summer 1949 (water purification)
DuPont, summer 1946), (dyes)
DuPont, summer 1961 (elastomers)
Texaco, summer 1962 (fuel additives)

Ph.D. dissertation topic: Oxidation (combustion)

Publications: more than 100 in field Books: six

Abstractor, CHEM. ABSTRACTS, 1948-present, more than 10,000 published abstracts
Abstractor, ACTA CHEMICA SCANDINAVICA, 1952-1962

Editor, THE CONDENSER, 1957-1965

Director, Gulf States Project (water pollution), 1957-1965

Honors: Outstanding Professor Award, 1962
Piper Professor Award, nominee 1970, 1971

Listed (Biography): WHO'S WHO IN SOUTH AND SOUTHWEST, LEADERS OF AMERICAN SCIENCE, AMERICAN MEN OF SCIENCE, DICTIONARY OF INTERNATIONAL BIOGRAPHY, WORLD WHO'S WHO IN SCIENCE AND COMMERCE, WORLD WHO'S WHO IN FINANCE AND INDUSTRY, WHO'S WHO IN AMERICAN EDUCATION, WHO'S WHO IN AMERICAN COLLEGES AND UNIVERSITIES, COMMUNITY LEADERS OF AMERICA, WHO'S WHO IN METHODISM, OUTSTANDING EDUCATORS OF AMERICA, others.

EXHAUST EMISSION TESTS

COMPARED WITH SAMPLE 23 (1500) RPM, IN NEUTRAL) WITHOUT V-70

Particulates	100	Micrograms per cubic meter
Hydrocarbons	120	" " ", "
Oxides of Nitrogen	60	" " " "
Sulfur Dioxide	80	" " " "
Carbon Monoxide	120	" " " "

SAMPLE 25 (1500 RPM, IN NEUTRAL) WITH V-70

Particulates	50	Micrograms per cubic meter
Hydrocarbons	60	" " " "
Oxides of Nitrogen	30	" " " "
Sulfur Dioxide	30	" " " "
Carbon Monoxide	40	" " " "

COMPARED WITH SAMPLE 24 (1000 RPM, IN DRIVE AND BRAKINGWITHOUT V-7

Particulates	80	Micrograms per cubic meter
Hydrocarbons	80	" " " "
Oxides of Nitrogen	70	" " " "
Sulfur Dioxide	90	" " " "
Carbon Monoxide	140	" " " "

SAMPLE 26 (1000 RPM, IN DRIVE AND BRAKING) WITH V-70

Particulates	50	Micrograms per cubic meter
Hydrocarbons	40	" " " "
Oxides of Nitrogen	40	" " " "
Sulfur Dioxide	40	" " " "
Carbon Monoxide	50	" " " "

UNITED STATES ENVIRONMENTAL PROTECTION AGENCY
ANN ARBOR, MICHIGAN 48105

December 22, 1980

OFFICE OF
AIR, NOISE AND RADIATION

Mr. Richard L. Plock
12900 Preston Road
Suite 715, L. B. 4
Dallas, TX 75230

Dear Mr. Plock:

On December 26, 1979 we sent you a suggested test plan for obtaining data from an independent laboratory on your device, the "V-70 Vapor Injector". Since we have not heard from you, we have assumed that you are withdrawing your request for an evaluation at the EPA laboratory.

Recently EPA reevaluated their policy on the amount of data required from an independent laboratory before an EPA evaluation would be considered. Instead of duplicate cold-start tests on three vehicles as required in the past we now require duplicate hot-start tests on only two vehicles. I am enclosing a description of the new test policy along with an application format in case you may wish to reapply for an EPA evaluation of your device.

We would appreciate a response from you informing us of the action you plan to take on this matter. If you do not plan to apply for EPA testing we would like to close out our file on your device.

Sincerely,

Merrill W. Korth

Merrill W. Korth, Device Evaluation Coordinator
Test and Evaluation Branch

Enclosure