EPA-AA-TEB-511-83-7

EPA Evaluation of the POWERFUeL Extender System Under Section 511 of the Motor Vehicle Information and Cost Savings Act

by

Stanley L. Syria

August 1983

Test and Evaluation Branch
Emission Control Technology Divison
Office of Mobile Sources
U.S. Environmental Protection Agency

EPA Evaluation of the POWERFUeL Extender System Under Section 511 of the Motor Vehicle Information and Cost Savings Act

The Motor Vehicle Information and Cost Savings Act requires that EPA evaluate fuel economy retrofit devices and publish a summary of each evaluation in the Federal Register.

EPA evaluations are originated upon the application of any manufacturer of a retrofit device, upon the request of the Federal Trade Commission, or upon the motion of the EPA Administrator. These studies are designed to determine whether the retrofit device increases fuel economy and to determine whether the representations made with respect to the device are accurate. The results of such studies are set forth in a series of reports, of which this is one.

The evaluation of the "POWERFUeL Extender System" was conducted upon the application of the manufacturer. The device is claimed to improve fuel economy and driveability and to reduce exhaust emissions and required engine maintenance. The device is classified by EPA as a vapor-air bleed device.

1. Title:

   Application for Evaluation of POWERFUeL Extender System Under Section 511 of the Motor Vehicle Information and Cost Savings Act

---

The information contained in sections two through five which follow was supplied by the applicant.

---

2. Identification Information:

   a. Marketing Identification of the Product:

      POWERFUeL Extender System

   b. Inventor and Patent Protection:

      (1) Inventor

      Myron Stein
      79 Robert Pitt Drive
      Monsey, NY 10952
      (914) 352-2240

      (2) Patent

      "Attached is [a] copy of the patent application" [Attachment A]

c. Applicant:

(1) Name and address

Myron Stein
79 Robert Pitt Drive
Monsey, NY 10952

(2) Principals

Myron Stein

(3) Myron Stein [is authorized to represent Auto Economy Venture, Inc. in communication with EPA.]

d. Manufacturer of the Product:

(1) Name and address

Auto Economy Venture Inc.
79 Robert Pitt Drive
Monsey, NY 10952

(2) Principals

Myron Stein

3. Description of Product:

a. Purpose:

"Purpose [is] to supply a high octane cleaning fuel on demand."

b. Theory of Operation:

"An EPA approved gasoline additive[1] in diluted form is induced into the combustion chamber when the engine requires a power boost. This is accomplished through a patent pending vacuum modulated valve.

(1) vacuum valve closes when engine starts
(2) valve remains closed at idle
(3) Idle vacuum is about 15-20 inches
(4) on acceleration, the vacuum drops to about 3" when the valve opens and high octane cleaning fuel is induced into the combustion chamber.

---

[1]Although EPA does register fuel additives, such registration does not constitute an approval.

(5) the amount of POWERFUeL used is in direct proportion to the need of the engine; when engine vacuum increases above 3", the valve closes."

c. Construction and Operation:

"Attached is a copy of the detailed patent pending drawings." [Figures 1 through 4 of Attachment A]

d. Specific Claims for the Product:

"(1) significantly lowered undesirable emissions
(2) engine power boost on demand
(3) longer engine maintenance interval
(4) less engine wear
(5) cleaner burning engine
(6) allows the use of lower octane gasoline
(7) reduced or eliminated pinging and engine knocking
(8) improved acceleration
(9) all above combined to increase gas mileage or engine efficiency"

e. Cost And Marketing Information:

"(1) suggested retail price-$39.95
(2) to be sold to automotive aftermarket (manufacturers/marketers/warehouse distributors."

4. Product Applicability Installation, Operation, Safety and Maintenance:

a. Applicability:

(1) "The POWERFUeL Extender System will work on all gasoline operated engines when ported to the vacuum port center of the manifold.

(2) this system is advantageous in all areas investigated and have found no area where it is not advantageous"

b. Installation - Instructions, Equipment, and Skills Required:

"no tools or any adjustments to engine required"

c. Operation:

"is automatic, needs no servicing"

d. Effects on Vehicle Safety:

"no safety hazard to persons or vehicle, same category as windshield washer fluid"

e. Maintenance:

"none for the valve but replenishment of the POWERFUeL fluid [is] necessary when used up in order to maintain benefits of the system; in the absence of replenishment, the engine reverts to operation of a newly tuned and cleaned engine with normal deteriorations to be expected."

5. Effects on Emissions and Fuel Economy:

a. Unregulated Emissions:

[Information regarding unregulated pollutants was not submitted by the applicant.]

b. Regulated Emissions and Fuel Economy:

"Effects on Emissions and Fuel Economy: as outlined in 3.d." [Although not referred to by the applicant, the test data in Attachment B were submitted with the application to support some of the claims made for the device.]

The following sections are EPA's analysis of this device.

---

6. Analysis

a. Identification Information:

(1) Marketing, Inventor, Applicant, and Manufacturer Identification:

EPA's only comment with respect to these areas is that subsequent to submission of the initial application, Mr. Joe Farkas of Auto Economy Venture, Incorporated was designated the representative to EPA.

(2) Patent Protection:

There are two areas of the patent application (Attachment A) which were not clarified. First, Figure 2A shows a flow restrictor (item 46) which differs in design from that depicted in the installation instructions (Attachments C and D). Second, Figures 1 and 4 show that two different installation configurations are possible.

EPA asked the applicant whether his application applied to more than one design and installation configuration (Attachment E). The applicant responded (Attachment F) that only one design is currently available. He also stated the application applied only to the single valve installation configuration shown in Figure 1 of the patent application.

b. Description:

(1) The purpose of the device is to reduce exhaust emissions and operating cost and to improve vehicle performance. The claim for a reduction in operating cost is due to reduced required engine maintenance, improved fuel economy, and to the savings realized by enabling the engine to run on lower octane fuel.

(2) Based on the information submitted, the theory of operation was judged to be adequate in that it enabled EPA to develop an understanding of how the device is designed and is supposed to function. It appears the device is a vapor-air bleed device which meters an additive (composed mostly of alcohol and water) into the engine's induction system only during periods of hard accelerations. Thus, this device differs from injection systems which pump water as a liquid into the engine during all modes of operation. The inducted additive is said to cause a) a change in combustion temperatures (and thereby reducing detonation and dieseling problems and thus allowing the use of lower octane fuel), b) an increase in power output, and c) a cleansing of the combustion chamber.

In EPA's judgment there is considerable question that this device will produce all the benefits claimed by the applicant. The amount of water/alcohol vapor introduced by this device is very small (one pint per 1500 miles); too small to likely produce a significant effect on the combustion process. Some other devices that introduce larger amounts of "liquid" water in conjunction with adjustments in engine parameters have produced modest improvements in fuel economy. In that situation the larger amount of water lessens the engine's tendency to detonate and permits operation at a more advanced ignition timing setting, which results in improved fuel economy. Water injection at these higher rates lowers oxides of nitrogen emissions but when ignition timing is advanced to improve fuel economy, a major portion of the oxides of nitrogen reduction may be lost.

There are two generally accepted concepts as to why water injection reduces oxides of nitrogen and lowers the fuel octane requirement of the engine. One theory maintains that in the combustion process, the inert water molecules intersperse among the molecules of fuel and oxygen and make it more difficult for the fuel and oxygen to get together for combustion. The speed of the reaction is thereby decreased lowering the peak combustion temperature and lessening the tendency to detonate or form oxides of nitrogen. The second theory maintains that as the water vaporizes in the combustion chamber the fuel/air mixture is cooled which ultimately results in a lower peak combustion temperature. In any case, the end result is less detonation and lower oxides of nitrogen.

In a recent study, it was found that the addition of significant amounts of water as liquid caused essentially no change in fuel economy.[1] If the water is vaporized prior to entry into the combustion chamber, there will be even less benefit for two reasons. First, the vapor displaces some of the oxygen which decreases the volumetric efficiency. Second, because the water is already vaporized, there is little evaporative cooling of the fuel/air charge and there is little benefit from the cooling phenomenon discussed above. During World War II liquid water injection was used on aircraft to improve takeoff performance. In this situation a large amount of water lowered cylinder head temperatures, and thus permitted takeoffs at higher intake manifold boost pressures. The increased takeoff power was due to an increased quantity of fuel/air charge that resulted from the higher boost pressure, not due to the water injection itself.

There is a popular concept that introducing water in any quantity and any form is beneficial to the operation of an internal combustion engine. As a result many vapor injection or steam injection devices have been submitted to EPA for evaluation. In most cases the amount of water introduced is insignificantly small. Regrettably, none of the vapor devices produced significant benefits and only one water injection device produced fuel economy benefits and that was at the expense of increased emissions.

---

1 Bruce D. Peters and Russell F. Stebar, "Water-Gasoline Fuels -- Their Effect on Spark Ignition Engine Emissions and Performances", General Motors Corporation Research Labs, SAE Paper 760547, June 1976.

Most of the same arguments given by EPA for water are also valid for alcohol. The most important being that because the amount of alcohol added to the engine is very small, it is not expected to have a significant impact on neither the combustion process nor engine performance. Additionally, because alcohol contains oxygen it is expected to have an adverse effect on oxides of nitrogen emissions.

(3) The description of the POWERFUeL Extender System given by the applicant was judged to be adequate. The reader should note that the device consists of both a mechanical bleed device and a fluid. Samples of the device which were submitted to EPA, were found to be well designed and constructed using appropriate materials. During EPA's examination of the two sample devices, it was noted that each contained seemingly identical flaws, namely holes in the plastic fluid line and incorrect air bleeding of the control valve. EPA asked the applicant to clarify these apparent problems (Attachment E). The applicant responded (Attachment F) that the holes were intentional and were designed to prevent syphoning and hydraulic lock when the engine was turned off. Additionally stated was that the apparent air bleed problem was due to the valve being dry and that it should function properly when fluid runs through it.

(4) The applicant makes several claims for the device in the application (Section 3.d.) and in Attachment D. However, the claimed fuel economy benefits did not include specific improvement percentages. When asked about this, the applicant responded (Attachment F) the range was from 0-20 percent. Further, it is not clearly stated that all benefits claimed will not occur on every vehicle. Also not stated is that some benefits can only occur during certain driving conditions, i.e., severe accelerations (manifold vacuum less than 3 inch Hg.). The following are EPA's comments with respect to each benefit claimed.

Benefit Claimed	Comment
(a) Cleaner Engine:	If introduced in sufficient quantity the fluid could cause a cleansing of the combustion chamber (including spark plugs) for all vehicles. This would be a greater benefit for vehicles using leaded fuels and/or running very rich air/fuel mixtures and/or driven short distances at low speeds. However, data were not submitted showing the device could indeed cause a cleansing of the engine.

(b)	Increased power and improved acceleration	Likely to occur only if the proper rate of fluid bleeding occurs during severe accelerations (3 inch Hg. or less) and if accompanied with certain engine parameter changes, e.g., ignition timing. The acceleration rates needed to operate the device seldom occur for some vehicles, therefore these benefits will be limited.
(c)	Increased fuel economy (because spark plugs stay in "new" condition longer)	"New" spark plugs have electrodes which are clean and properly gapped and configured (square ends and lacking any metal transfer). At best, the device can only keep the plugs clean and cannot prevent the normal deterioration (increased plug gap, metal transfer, and rounding of electrode ends) due to other causes (e.g., heat). Therefore, unless fouling is a problem, the plugs will likely deteriorate at their normal rate and will not stay in "new" condition significantly longer. Thus, fuel economy improvements, at least for the reasons given by the applicant, are unlikely to be realized.
(d)	Eliminates rough idle and hard starting (when related to spark plugs)	If rough idle and hard starting are caused by spark plug fouling and not due to the other causes of spark plug deterioration discussed in item (c) above, then the device may be beneficial due to the fluid cleansing action.
(e)	Allows use of lower octane fuel (by removing carbon deposits within the combustion chamber)	Carbon deposit buildup can cause combustion pressures and temperatures to rise to levels that result in knocking (detonation) and after-running (dieseling). This is achieved by at least three different means. First, deposit build up reduces the combustion chamber volume which in turn increases the compression ratio with a consequential increase in mixture temperature during the

compression stroke. Second, the deposits do not allow efficient transfer of heat from the combustion chamber, through the cylinder walls and into the coolant. Third, heavier deposits can cause hot spots which can have a heating effect on incoming mixture. This results in the last portion of the unburned mixture to rise to higher temperatures than would be the case without the deposits. The increased compression ratio, the hot spots, and the insulating effect often work together to cause detonation and dieseling. A common cure for these problems is to use higher octane (and more expensive) fuel than that recommended by the vehicle manufacturer. Carbon deposit removal by use of the device would allow a return to lower octane fuel and, therefore, a reduction in operating expense could be realized. However, EPA expects that on a national fleet basis, the actual savings will be insignificant because 1) most vehicles run satisfactorily on the fuels specified by the manufacturer and 2) of the vehicles that are using higher octane fuel because of detonation and dieseling problems, some will not be able to switch to lower octane fuel (even with the device) because the problems are caused by other factors (e.g., air-fuel ratios, ignition timing, spark plug type, cylinder head gasket protrusion, etc.) which are not affected by use of the device. Further, even without the device, for some vehicles detonation and dieseling can often be eliminated merely by having a qualified service facility change certain engine parameters (for which the vehicle manufacturer has received prior EPA approval).

(f)	Eliminates most knocking and dieseling	EPA assumes the term "knocking" to mean detonation and that it does not include knocking attributable to mechanical components such as connecting rod bearings, piston skirt, etc., which the device cannot cure. With respect to detonation and dieseling, please refer to item (e) above.
(g)	Eliminates engine hesitation	This may be true in some instances; however, the device may also cause hesitation if fluid bleed rates are not correct during severe accelerations. Because of the minimal bleed rate involved with this device, this is not expected to be a real problem.
(h)	Significantly lowered emission rates	With large bleed rates, the device would likely cause a decrease in oxides of nitrogen during heavy acceleration operation, an increase in hydrocarbons, and little change in carbon monoxide levels. However, the bleed rates with this device are not expected to cause significant changes in any of the emission levels.
(i)	Extended maintenance intervals and engine life	EPA agrees the device could theoretically have some impact on maintenance intervals and engine life. However, the actual magnitude of the benefits are difficult to predict without test data.

In summary, for those vehicles which never get subjected to manifold vacuum levels of 3 inch Hg. or less, the device will not function and consequently there are no benefits. For other vehicles, the device will function occasionally and may cause some of the benefits claimed. Whether the benefits are significant is difficult to ascertain without appropriate test data. The primary reason for this is that the benefits achievable with any vapor-air bleed device are dependent on how well the unit is matched to each engine design/calibration and also on the composition of the fluid used. Because the device only functions during heavy accelerations and also considering the bleed rate involved,

EPA does not expect significant benefits to be realized with this device. Potential purchasers should also be aware that the applicant gives a warranty against manufacturing defects but does not give a guarantee with respect to the benefits claimed.

(5) The cost of the device, as given by the applicant, is $39.95. EPA estimates that installation time would not exceed 15 minutes and assuming a shop rate of $20 per hour, the installation cost would be approximately $5. Thus, the total cost would be approximately $45. If use of the device did result in as much as a 10 percent improvement in fuel economy (and assuming a cost of $1.40 per gallon of fuel), a vehicle averaging 20 mpg would have to be driven approximately 13,000 miles to recover the cost. This takes into consideration the replacement cost of the fluid of $4.95 per pint which is required approximately every 1,500 miles (according to Attachments D and F). Because most purchasers will be able to install the device themselves, the actual mileage for recovering the cost would be slightly less then predicted.

After the cost of the device was recovered, the purchaser would still have to recover the cost of each bottle of fluid purchased thereafter. In this case, the payback mileage would be approximately 750 miles. Because of the periodic cost of fluid, the hypothetical device savings of 10 percent would actually be an effective savings of about five percent.

c. Installation, Operation, Safety and Maintenance:

(1) Applicability:

EPA finds no problem with the applicant's statement regarding the applicability of the device.

(2) Installation - Instructions, Equipment and Skills Required:

The installation of the device should not be a difficult task and only a basic knowledge of engines and simple tools are required.

(3) Operation:

Based on the design of the device, EPA has judged that action by the driver is not required in order for the device to function properly.

(4) Effects on Vehicle Safety:

EPA judges that the device should not pose any safety related problems providing that the device is designed and manufactured to specifications given in the application and that it is installed as described in the instructions.

(5) Maintenance:

Based on the information and the sample devices provided, EPA agrees with the applicant that, aside from the replenishment of the fluid, the device should not require any maintenance. With respect to other engine components, EPA cannot ascertain without data whether their maintenance will be significantly affected.

d. Effects on Emissions and Fuel Economy:

(1) Unregulated Emissions:

The applicant did not submit any data with respect to unregulated exhaust emissions. Although data were not provided, it is EPA's engineering judgment that based on the design of the device, the POWERFUeL Extender System is unlikely to significantly affect unregulated pollutants.

(2) Regulated Emissions and Fuel Economy:

The applicant did not submit test data in accordance with the Federal Test Procedure and the Highway Fuel Economy Test. These two test procedures are the primary ones recognized by EPA for evaluation of fuel economy and emissions for light duty vehicles.* The data submitted to EPA (Attachment B) appeared to be from a single test on one vehicle using an automotive diagnostic analyzer. Consequently, the data did not adequately represent the varying speed and load conditions of in-use vehicles nor did it provide for a statistically sound test program. For these reasons, the data did not meet the Agency's minimum

---

*The requirement for test data following these procedures is stated in the policy documents that EPA sends to each potential applicant. EPA requires duplicate test sequences before and after installation of the device on a minimum of two vehicles. A test sequence consists of a cold start FTP plus a HFET or, as a simplified alternative, a hot start LA-4 plus a HFET. Other data which have been collected in accordance with other standardized procedures are acceptable as supplemental data in EPA's preliminary evaluation of a device.

requirements. The applicant was asked (Attachments E and G) to submit additional test data and EPA helped develop a test program for the device. However, the applicant did not submit any additional data. Subsequently, the applicant notified EPA he would not be testing the device for several months and therefore the Agency decided to complete its evaluation using all available information. The applicant was advised that any test data or additional information would be accepted as part of a new application.

e. Test Results Obtained by EPA:

EPA did not test the device for this evaluation for three reasons. First, the information submitted to the Agency did not adequately support the claims made for the device. Second, EPA has tested similar products which showed no significant benefits. Third, the applicant notified EPA that additional supporting test data would not be submitted for several months.

7. Conclusions

EPA fully considered all of the information submitted by the applicant. The evaluation of the POWERFUeL Extender System was based on that information and on EPA's experience with other similar devices. Although, in theory, the introduction of alcohol and water could have a favorable effect on an engine's cleanliness, power and maintenance requirements and could even allow some vehicles to use lower octane fuel, data were not submitted to substantiate that the POWERFUeL Extender System could cause these benefits. Additionally, the device is not expected to significantly change exhaust emission or fuel economy levels. Further, for those vehicles in which the device will seldom come into operation, the benefits will be limited. Thus, there is no technical basis for EPA to support the claims made for the device, to perform confirmatory testing, or to continue the evaluation on its own..

FOR FURTHER INFORMATION CONTACT: Merrill W. Korth, Emission Control Technology Division, Office of Mobile Sources, Environmental Protection Agency, 2565 Plymouth Road, Ann Arbor, MI 48105, (313) 668-4299.

List of Attachments

Attachment A	Copy of the Patent Application (provided with 511 Application).
Attachment B	Copy of supporting test results.
Attachment C	Copy of installation instructions submitted with application.
Attachemnt D	Copy of pamphlet enclosed with sample devices.
Attachment E	Copy of letter from EPA to Auto Economy Venture, Incorporated, November 4, 1982.
Attachment F	Copy of letter from Auto Economy Venture, Incorporated to EPA, December 3, 1982.
Attachment G	Copy of letter from EPA to Auto Economy Venture, Incorporated, December 28, 1982.

ATTACHMENT a

FLUID INJECTION SYSTEM

BACKGROUND OF THE INVENTION

The present invention relates generally to fluid injection systems and more specifically to a fluid injection system having a novel valve and used in conjunction with an antidetonant fluid for improving the combustion process of an internal combustion engine system.

It is well known that the function of the carburetor in an internal combustion engine system is to produce the hydrocarbon fuel and air mixture needed for operation of the engine. In the carburetor the fuel is distributed in the form of tiny droplets in the stream of air. As a result of heat absorption on the way to the cylinder, these droplets are vaporized so that the fuel/air mixture enters the combustion chamber of the cylinder in the form of a flammable gas.

The burning of the vaporized fuel/air mixture during the process of combustion in internal combustion engine systems produces both nonpollutting by-products of carbon dioxide and water and pollutants including unburned hydrocarbons, carbon monoxide and nitrous oxide. Some of these pollutants form deposits on the intake valve, inside of the combustion chamber and spark plugs and result in less efficient use of fuel, rough idle, hesitation, hard starting, misfires, and backfires. Continued formation of these deposits increase the effective compression ratio of an engine so that higher octane fuel is needed to attain desired combustion and thus sufficient power. It has been

determined that removing carbon deposits from the valves and combustion chambers of "dirty" engines lowers the octane requirements of a given engine by an amount estimated to be over ten percent. It has also been found that cooling the intake charge increases the power and lessens the engine knock for fuel of a given octane rating.

The above findings have led to the development of injection systems that administer an additive to the fuel or antidetonant to cleanse the engine's combustion chamber of carbon buildup and cool the temperature of the intake charge. Known systems inject water, methanol, ethanol, other alcohols and combinations thereof with varied results. The use of some alcohol mixtures have had negative results, namely the formation of pollutants due to inadequate oxygen during the combustion process. Water additives have been found to cool the intake charge to the extent of causing the reduction of the power output and sometimes resulting in too much cooling with increased unburned carbon by-products.

Up to the present time the injection systems used to introduce the antidetonant have been inefficient. Most injection systems are of a constant flow design so that there is no control of the antidetonant resulting in too much additive being introduced when the engine is idling and not enough when the engine is at its peak demand (as during rapid acceleration). Sophisticated electronic control systems have been developed that control the flow of additives, but they are very expensive and require highly qualified technicians for service and installation and, further, make no provision for the extra oxygen required to burn the additive. Up to the present, no service-free low cost injection system has been developed to provide control of additive injection based on engine demand.

An example of prior art attempts is exemplified by water feed injection system disclosed in U.S. Patent 1,119,042 issued to James R. Ricketts on December 1, 1914.

In the Ricketts' patent, moisture is introduced into the manifold at a point between the carburetor and internal combustion engine to improve the combustion. The moisture in the form of steam is used to form a cushion effect to stop engine knocking and increase the power generated. In the Ricketts' patent a vacuum valve is disposed between a supply of water and the engine such that as suction is produced in the manifold the valve is closed. As the work of the engine increases so that less vacuum is produced, the valve is opened so that the water may be drawn into the manifold. Other U.S. patents such as U.S. Patent 1,101,147 issued to Thomas F. Sawyer on June 23, 1914 and U.S. Patent 819,239 issued to L.J. Marks on May 1, 1906 show examples of valves used in gasoline engine systems to introduce into the system mixtures of fluid to improve the operation of the engines. In none of these systems does the flow of additive vary directly with the load on the engine. Alternative known systems such as that disclosed in U.S. Patent 4,119,062 issued to William T. Trevaskis on October 10, 1978 introduces the antidetonant to the combustion chamber in a vapor rather than liquid form. Not only is this type system less efficient, but none are known to be totally responsive to engine demand.

It has further been known that the use of intake manifold pressure as a measure of critical need can be used as the controlling force for determining when antidetonant is to be added to the fuel/air stream. As pointed out in the April, 1949 (Volume 3, Number 2) issue of the Society of Automotive Engineers (SAE) Quarterly Transactions by C. H. Van Hartesveldt, the principle of using antidetonant only when needed has been known in both aircraft and automotive use. In that article an antidetonate injection unit is disclosed mounted on the carburetor of an automobile internal combustion engine system for discharge of the additive into the main venturi. While the article recognizes the importance of maximum delivery of the antidetonant at full throttle (maximum engine demand), the structure of the disclosed injection unit does not

provide for an optimum increase of antidetonant as the engine reaches full demand. On the contrary, at full throttle the amount of antidetonant actually decreases as shown on Figure 7 of that article.

None of the prior art systems disclose a simple mechansim that allows optimum control of the antidetonant directly related to engine demand. With the present day emphasis on anti-pollution control and engine economy resulting in overall decreases in stock engine performance and as a further result of the reduction of gasoline octane ratings, it is readily apparent that the availability of an improved antidetonant injection system is highly desirable.

SUMMARY OF THE INVENTION

An object of the present invention is to provide an improved fluid injection system for use in conjunction with an internal combustion engine system.

Another object of the present invention is to provide an improved valving configuration for use in a fluid injection system.

A further object of the present invention is to provide a unique antidetonant injection system for use in an automobile combustion engine wherein antidetonant is introduced during the combustion process in amounts directly responsive to engine load demand.

A still further object of this invention is to provide a antidetonant injection system having a novel valve that is responsive to performance characteristics of an internal combustion engine to control the amount of antidetonant being introduced into the combustion chamber of the engine during the combustion cycle.

Yet another object of this invention is to provide an antidetonant injection system that may be added to existing automobiles to improve the engine performance of the internal combustion engine during the combustion process.

Still another object of this invention is to

provide an antidetonant fluid injection system having a novel valving configuration responsive to performance characteristics of an internal combustion engine so as to control the amount of antidetonant and air mixture to the engine during the combustion cycle.

These and other objects of the invention are provided through the use of a fluid injection system having a novel valve and including an antidetonant fluid reservoir mounted on the chassis of the automobile. The valve is inserted in the existing vaccum connection between the PCV valve or its equivalent and the intake manifold of the carburetor with the valve inlet connected to the reservoir of antidetonant fluid. The valve housing is constructed so that the valve passage is opened in increasing amounts as engine demand is increased and a mixture of the antidetonant and air allowed to pass through the valve outlet into the intake manifold to be mixed with the mixture of fuel and air prior to entering the combustion chamber. The antidetonant is a proprietary mixture including lightly based hydrocarbons, surfactants and water that results in a decrease in the temperature of the intake charge and a decrease in the carbon by-products normally associated with the combustion process. The decreased intake manifold temperature further results in a combustion charge that has an increased density and greater potential for expansion. In addition, the conversion from liquid to vapor during the combustion process consumes heat at the rate of 600 calories per gram of liquid at a very critical instant allowing a slower than normal increase in combustion temperature to a lower than normal temperature peak. The main passage of the valve, designed to be closed when the engine is idling, allows varying controlled amounts of antidetonant to flow proportional to the amount of engine load demand or acceleration. The inclusion of a check valve ball positioned in a specially constructed chamber in the main passage having circular cross sections of varying diameters is responsible for the precise control of the flow of

antidetonant related to engine demand. The walls of the generally tubular shaped chamber are designed to gradually diverge so that as the distance from the valve seat is increased, so does the diameter of each circle representing the chamber's cross section. This critical structural design feature of the chamber allows more area and hence more antidetonant and air to flow around the ball, through the main passage of the valve and into the intake side of the carburetor as the ball moves away from its valve seat. The structure of the valve, as will be explained in the description of the preferred embodiment, includes a biasing means to force the ball away from its valve seat a progressively greater distance as the demand on the engine increases.

Another critical structural design feature of the valve resides in the provision of an air inlet to the chamber separate and apart from the antidetonant fluid inlet into the chamber. Both the antidetonant and air are allowed to mix in the chamber in a desired stoichiometric ratio so that adequate oxygen is eventually fed into the combustion chamber of the engine. In an alternative embodiment, a second valve identically structured as the main valve is provided to permit the introduction of air to the antidetonant even when the check valve ball shuts off the air supply in the main valve.

Objects, advantages and novel features of the present invention will become apparent from the following detailed description of the invention when considered in conjunction with the accompanying drawings.

BRIEF DESCRIPTION OF THE DRAWINGS

FIGURE 1 is a schematic drawing of the fluid injection system showing the valve connections;

FIGURE 2A is a cross section of the valve housing;

FIGURE 2B is a cross section of an alternative embodiment of one section of the valve housing;

FIGURE 3 is a cross section taken along the same

lines of FIGURE 2 of the valve housing with its components in place; and

FIGURE 4 is a schematic drawing depicting an alternative embodiment of the fluid injection system using two valves.

DESCRIPTION OF THE PREFERRED EMBODIMENTS

The schematic of FIG. 1 illustrates fluid injection system 10 as having a reservoir 12 within which antidetonant fluid 14 is stored, PCV valve 16, carburetor 18 and valve 20. Valve 20 is designed so that inlets 24, 25 and 28 are in fluid communication with outlet 32 as will be explained in greater detail below. Flexible tubing 22 has one end positioned in reservoir 12 and the other end connected to inlet 24 of valve 20. In the preferred embodiment a filter is provided at the end of tubing 22 located in the reservoir to prevent pollutants and solid particles from clogging the valve 20. Flexible tubing 26 has one end connected to PCV valve 16 and its other end to inlet 28 of valve 20. Flexible tubing 30 connects outlet 32 of valve 20 to the intake side of carburetor 18. PCV valve 16 and carburetor 18 represent standard components found in automobiles having an internal combustion engine system while reservoir 12 and valve 20 are anticipated to be supplied as add-ons. As will be explained below the PCV connection allows increased control of antidetonant flow. Reservoir 12 may be mounted by a suitable method at any convenient location on the chassis of an automobile in a position that it is always lower with respect to the ground level than valve 20 so that no syphoning action from the reservoir can occur. In the preferred embodiment, reservoir 12 is mounted on the fire wall under the hood of the automobile.

As is well known to those in the art, the PCV valve is generally connected directly to the intake manifold of the carburetor and has as its primary purpose the venting, by suction developed in the intake manifold of unburned fuel and other pollutants back into the intake

side of the carburetor for burning during the combustion process. Neither the function of the PCV valve nor the suction action developed in the intake manifold is effected by the insertion of valve 20 which is constructed to allow the continuous uninterrupted flow of the pollutants from PCV valve 16 through the passage from inlet 28 to outlet 32 of valve 20 into the intake side of carburetor 18. Thus, the use of valve 20 does not adversely affect the normal operation of the PCV valve 16 or carburetor 18.

When the engine is idling the suction developed in the intake manifold is the greatest and, as explained in detail below, the main passage of valve 20 between inlet 24 and outlet 32 is closed. As the engine load is increased, as happens during acceleration, the suction or negative pressure from the intake manifold is decreased and the main passage between inlet 24 and outlet 32 in valve 20 is designed to open so that a mixture of antidetonant 14 and air in the desired stoichiometric ratio is drawn into the intake side of carburetor 18. As is explained in greater detail below, the closure means in the main passage between inlet 24 and outlet 32 is structured so that as the acceleration or load of the car engine is increased and the suction in the intake manifold of the carburetor decreased the amount of antidetonant 14 and air flowing into the intake side of carburetor 18 is increased. The presence of antidetonant 14 in the carburetor 18 allows it to be mixed with the standard fuel and air mixture in the combustion chamber. As previously pointed out, the proprietary mixture of hydrocarbons, alcohols, surfactants and water in antidetonant fluid 14 accomplishes the cleansing of carbon deposits in the combustion chamber and intake valves as well as a lowering of the temperature of the intake charge in the combustion chamber. Thus, improved engine performance results.

FIG. 2A illustrates a cross section taken of the valve 20 without any of its components and is

identified as valve housing 33. In the preferred embodiment the material used for valve housing 33 is an easily molded machinable polyester plastic having a melting point substantially higher than the 275°F peak temperature anticipated under the hood of an automobile. It is obvious that any suitable material that is impervious to the corrosive effects of the chemicals in antidetonant 14 may be used. Inlet 28 is seen to be at one end of through bore 34 and outlet 32 is located at the other end thereof. In fluid communication with bore 34 is bore 36 formed in housing 33 and having a closed end section 36' and an open ended section 36". Section 36" includes valve seat 38, valve chamber 40 and outer end 42. Connected to valve chamber 40 is bore 44 having a fluid flow restrictor 46 located at the inner end thereof and inlet 24 located at the outer end thereof. In the preferred embodiment flow restricter 46 is formed with a small hole of .016-.050 inch diameter. Valve chamber 40 has gradually increasing circular cross sections having a diameter of .375 at valve seat 38 and a diameter of .385 at location 52. The diameter of the circular cross section of section 36" of bore 36 from location 52 to the outer end 42 is constant for reasons to be explained below.

In an alternative embodiment of the housing 33, bore 34 may be positioned so that the closed end of section 36' of bore 36 is located on the interior wall of bore 34 as is illustrated in FIG. 2B.

The components that make up the operational valve are shown in position in FIG. 3. Tubular shaped sections 54 and 56 are located at inlet 28 and outlet 32 or bore 34, respectively so that the ends flexible tubing 26 and 30 may be slipped over the outer ends thereof in a fluid tight condition. It is obvious that sections 54 and 56 may be formed integrally with housing 33 if so desired. Stainless steel compression spring 58 is located in section 36' bore 36 as shown so that in a noncompressed position one end thereof is positioned in section 36" of bore 36 just past vavle seat 38 and into

valve chamber 40. Stainless steel check valve ball 60 is housed in valve chamber 40 between O-rings 62 and 64 so that a fluid tight condition results when ball 60 is seated on either O-ring 62 or 64, respectively. Washer-like plug 66, having an air passage 68, is fit into outlet 42 and, in the preferred embodiment, is fabricated from any suitable material that is impervious to antidetonant fluid 14. Air filter 69 is provided in opening 42 and, in the preferred embodiment, may be either a sintered bronze or porous plastic. Pipe segment 70 is inserted or molded into inlet 24 of bore 44 so that the end of flexible tubing 22 may be slipped over the outer end thereof in a fluid tight condition.

In operation, when the engine system to which the antidetonant injection system has been added is in an idling condition, the vacuum or suction from the manifold of the carburetor is at its maximum value. This value is generally 15 to 20 inches of mercury where one inch of mercury equals approximately .5 pound per square inch negative pressure at sea level. The suction force of vacuum causes check valve ball 60 into O-ring 62 in a fluid tight relationship sealing the main passageway inlet 24 and outlet 32 of valve 20. It is to be noted that 15 to 20 inches of mercury is sufficiently less than the atmospheric pressure in valve chamber 40 to allow the operation of valve 20 as explained below. Spring 58 is positioned and calibrated to exert force against ball 60, but not enough force to unseat ball 60 from O-ring 62 when the engine is in an idling condition. Thus, no antidetonant flows into the intake side of the carburetor.

Upon the value of vacuum from the intake manifold decreasing as happens when the engine is accelerated, the compression force of spring 58 is sufficient to unseat ball 60 from O-ring 62 so that antidetonant 14 can flow from the valve chamber 40 through outlet 32. As the throttling action of the engine is increased, the vacuum from the intake manifold is decreased resulting in

the spring 58 being able to push ball 60 towards plug 66 until the ball 60 is seated against O-ring 64 in a fluid tight relationship. Due to the increasing diameter of the circular cross sections of valve chamber 40 from seat 38 to location 52 in valve chamber 40, as explained above, the amount of antidetonant 14 allowed to pass into the intake manifold is increased as ball 60 approaches plug 66 and O-ring 64. The suction from the intake manifold draws antidetonant 14 from reservoir 12 through tubing 22, tubing 70, flow restricter 46, into valve chamber 40. At the same time air is drawn through passage 68 into valve chamber 40. The mixture of antidetonant 14 and air then passes through outlet 32 and into the intake manifold for distribution in the combustion chamber along with the standard fuel and air mixture.

Air passage 68 in plug 66 serves three purposes; first, to allow extra air into valve chamber 40 for the purpose of being mixed with antidetonant 14 as it is introduced in a desired stoichiometric ratio into the intake side of carburetor 18; second, to provide an additional force to push check valve ball 60 toward its closed position in engagement with O-ring 62 when the suction in the intake manifold increases and it is desired to immediately cut off the flow of antidetonant 14 into the carburetor 50 that any vacuum that may otherwise be trapped in valve chamber 40 is eliminated; and three, to control the amount of fluid being aspirated as ball 60 approaches O-ring 64 by allowing more antidetonant and less air to enter valve chamber 40.

In the rare instance in which a PCV valve is not used or when it is impractical to connect the existing PCV valve to the inventive system, inlet 28 of valve 20 may be capped. The operation of the system is affected in that some antidetonant 14 may be trapped in the fluid flow line between outlet 32 and the intake side of carburetor 18 and slowly dribble into the carburetor when it is not needed. Further, when valve 20 initially

opens, the reaction time for the antidetonant to reach the carburetor is lengthened. Therefore, to counteract having no PCV valve connection, tubing length 30 should be made as short as possible and connected to the intake side of the carburetor in the same location or in close proximity to where the PCV valve would ordinarily be connected.

In the preferred embodiment the following values and dimensions have been found to be desirable:

1. check valve ball 60 diameter of .375 inch ± .0005.
2. compression spring 58 spring rate of 1.266 pounds per inch so that at 3-1/2" vacuum the ball will be unseated from O-ring 62.
3. compression spring 58 compressed .110 inch maximum.
4. O-ring 62 and 64 inner diameter of .25 inch.
5. maximum antidetonant fluid and air flow at an intake manifold vacuum of 1" vacuum.
6. an increase in diameter of the circular cross section of valve chamber 40 from .377 inch at valve seat 38 to .385 inch at location 52.
7. plug 66 diameter of .675 inch
8. air passage 68 diameter of .090 inch
9. distance from valve seat 38 to plug 66 of .[illegible] .075 inch.

Using the above values, test use of the antidetonant injection system 10 has shown that approximately one quart of antidetonant 14 is consumed per 3,000 miles of average travel distance.

FIG. 4 represents a schematic diagram of an alternative embodiment of the invention wherein a valve 20', identical in structure to valve 20 is used to insure that a proper amount of air is mixed with antidetonant 14

before entering into the intake side of carburetor 18. Inlet 28' of valve 20' is connected to the PCV valve 16 via T-shaped connector 80, such that the operation of valve 20 is not affected. Outlet 32' of valve 20' is connected to the intake side of carburetor 18 via T-shaped connector 82 without affecting the operation of valve 20. Inlet 24' of valve 20' is not connected to antidetonant 14 so that air may enter tubing 30 through valve 20' into carburetor 18 whenever antidetonant 14 is drawn through valve 20.

The significance of the addition of valve 20' is apparent when check valve ball 60 of valve 20 is seated in a fluid tight condition against O-ring 64, so that air cannot enter valve chamber 40 via air passage 68. Without valve 20' connected as described above, more antidetonant 14 than necessary may enter carburetor 18 resulting in a waste of antidetonant 14. It is important to note that in all other respects, the preferred embodiment of the antidetonant injection system using a single valve 20 is as efficient as the embodiment using valve 20'.

From the preceeding description of the preferred embodiments, it is evident that the objects of the invention are attained and that an antidetonant injection system having a novel valve that can be used in any internal combustion engine system is provided which will result in more efficient engine performance.

Although the invention has been described and illustrated in detail, it is to be clearly understood that the same is by way of illustration and example only and is not to be taken by way of limitation. The spirit and scope of this invention are to be limited by the terms of the appended claims.

WHAT IS CLAIMED IS:

1. A valve having a main passage and a closure means,

said main passage including a chamber,

said chamber having diverging interior walls,

said closure means being located in said chamber and being movable therein,

whereby the amount of fluid allowed to pass through said main passage is directly related to the position of said closure means in said chamber.

2. The valve of Claim 1 wherein said chamber interior walls are generally tubular in shape and have generally circular cross sections, each said cross section having a different diameter value.

3. The valve of Claim 1 wherein said closure means is completely detached from said interior walls of said chamber.

4. The valve of Claim 3 wherein said closure means is in the shape of a ball.

5. The valve of Claim 1 having biasing means acting on said closure means with a force opposite in direction to that necessary to move said closure means to completely stop fluid flow through said main passage.

6. The valve of Claim 5 wherein said biasing means is completely detached from the interior walls of said valve.

7. The valve of Claim 5 wherein said biasing means is a spring.

8. The valve of Claim 6 wherein said biasing means is a spring.

9. The valve of Claim 1 having a second passage, said main passage and said second passage having a common outlet from said valve.

10. The valve of Claim 9 wherein said second passage is continuously open to fluid flow.

11. The valve of Claim 1 wherein said chamber has a plurality of inlets.

12. The valve of Claim 11 wherein at least one of said chamber inlets include a flow restricter.

13. The valve of Claim 1 wherein the housing is an integral member.

14. The valve of Claim 1 wherein there are at least three inlets and no more than one outlet.

15. A fluid injection system comprising:

a valve having a main passage and closure means,

said main passage having a first inlet and an outlet,

a supply of fluid and a vacuum source wherein said supply of fluid is connected to said first inlet, said vacuum source is connected to said outlet, and said closure means is located in said main passage between said first inlet and said outlet whereby said closure means controls the amount of fluid allowed to flow through said main passage in response to the value of vacuum from said vacuum source.

16. The fluid injection system of Claim 15 wherein the amount of said fluid permitted to flow through said main passage varies from zero at a predetermined value of vacuum to a progressively greater amount as the value of vacuum is decreased from said predetermined value.

17. The fluid injection system of Claim 15 wherein said closure means of said valve is a generally ball-shaped member.

18. The fluid injection system of Claim 16 wherein said closure means is a generally ball-shaped member.

19. The fluid injection system of Claim 15 wherein said valve has a continuously open second passage for controlling the response time for varying the amount of fluid flow through said main passage.

20. The fluid injection system of Claim 19 wherein said main passage of said valve has a second inlet for increasing the sensitivity of said valve to pressure differential in said valve.

21. The fluid injection system of Claim 15 wherein said valve has biasing means acting on said closure means with a force in opposition to the force resulting from said vacuum source.

22. The fluid injection system of Claim 21 wherein said biasing means is a spring.

23. The fluid injection system of Claim 17 wherein a compression spring is provided to create a biasing force against said ball-shaped member acting in opposition to the force created by said vacuum source.

24. The fluid injection system of Claim 15 wherein a second valve is provided having an outlet connected to said vacuum source for improving the fluid flow control through said main passage of said first valve.

25. The fluid injection system of Claim 24 wherein said second valve has the same structure as said first valve.

ABSTRACT

An antidetonant injection system for use in an internal combustion engine system having a novel valve in which the amount of antidetonant allowed to flow through the valve is directly related to the amount of engine demand ranging from zero flow when the engine is idling to maximum flow when the engine is at full throttle or under maximum load.

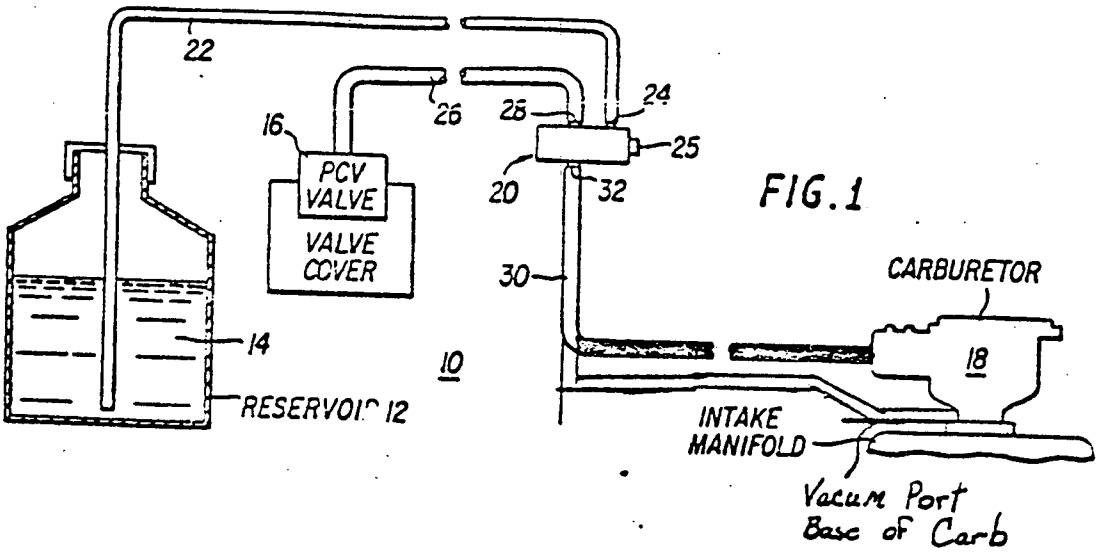

FIG. 1

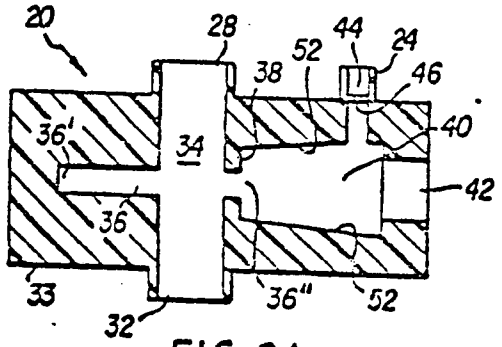

FIG. 2A

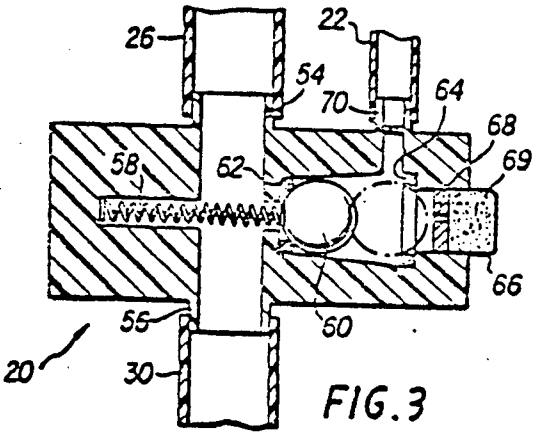

FIG. 3

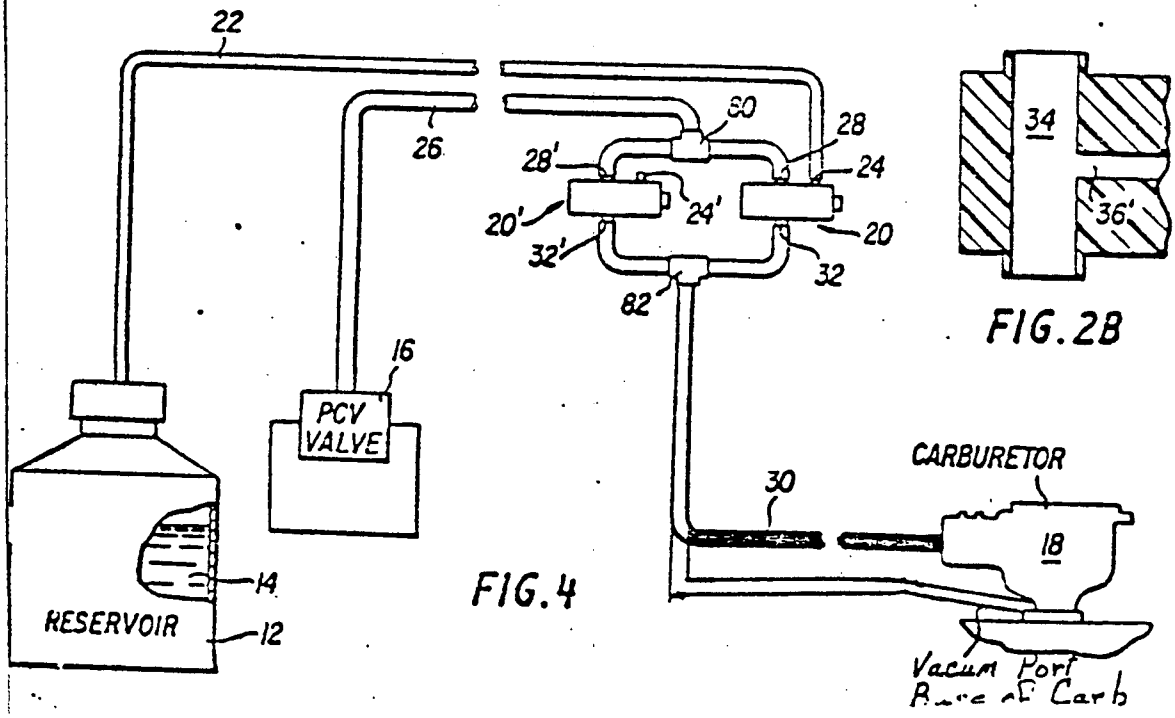

FIG. 4

FIG. 2B

Title: EPA Evaluation of the POWERFUeL Extender System Under ~~Section 511 of the Motor Vehicle Information~~ and Cost Savings Act

ATTACHMENT B

Page(s) 35 - ____

Not clearly reproducible from submitted document. Copy will be furnished upon request from the U. S. Environmental Protection Agency, Emission Control Technology Division, Test & Evaluation Branch, 2565 Plymouth Rd., Ann Arbor, MI 48105.

INSTRUCTIONS

1. Remove PCV Hose at Carburetor. A
2. Install Powerfuel Valve B into A.
3. Install Original Hose C to other end of B.
4. Mount Powerfuel Bottle Reservoir Holder D 1" below B.
5. Install Powerfuel Bottle G in D
6. Install Hose Pickup F into Powerfuel Bottle
7. Remove Hose F from nipple H. Start Engine and Run Engine until warm.
8. Install Hose F to Nipple I. Run Engine for 15 seconds or until 1/4 of bottle is used.
9. Shut engine off. Replace Hose F to Nipple H and replace Cap J to Nipple I.
10. **Take YOUR NEW CAR for a roadtest.**

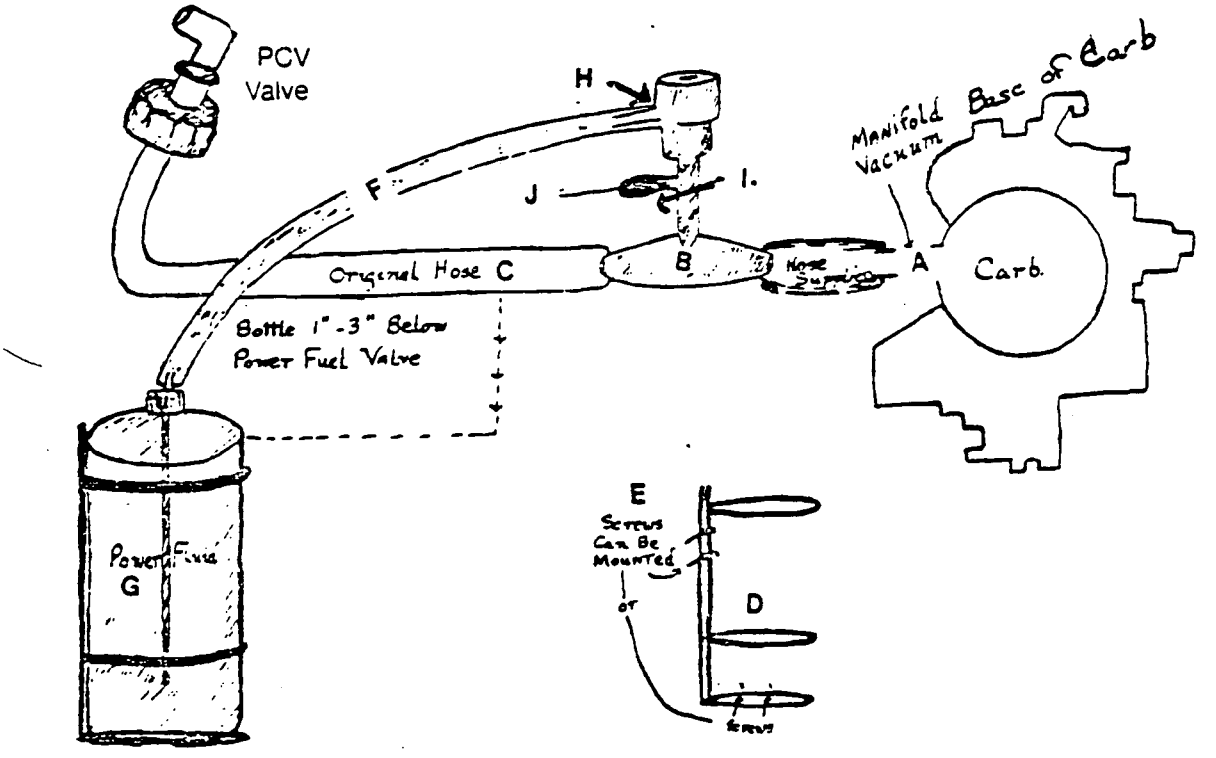

DESCRIPTION & CONTENTS

A PCV Hose Nipple at Base of Carburetor*
B POWER VALVE
C PCV Hose*
D Fluid Holder
E Mounting Screws and Nylon Strap
F Vacuum Hose with Pickup
G Bottle of Power Fluid
H Top Small Nipple
I Bottom Small Nipple
J Plastic Cap

*Part of Engine

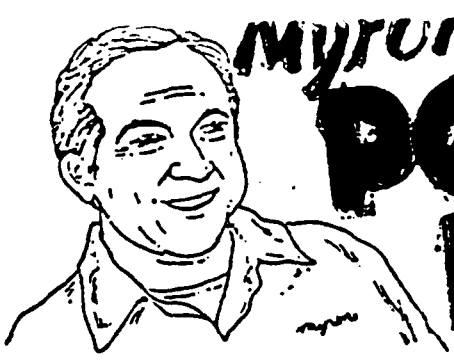

Myron's POWERFUeL Extender System™

The Ten Most Important Reasons Why YOU Should Have A "POWERFUeL Extender" In Your Car:

1. Cleans Engine!

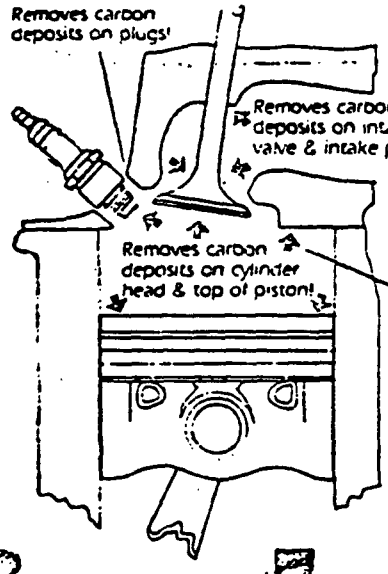

2. Increases POWER!

You'll feel the difference immediately!
The **POWERFUeL Extender** is computer designed to provide you with the performance your car was meant to give you!

3. Increases Gas Economy!

Get the efficiency of a new tune-up at all times.
Your car runs more economically because your plugs stay in "like new" condition longer.
Every ounce of gas works harder for you also. This means you get more out of the gas you buy!

4. Eliminates Rough Idle & Hard Starting.

(when related to spark plugs)

Nothing is worse than a car that doesn't start.
Myron's POWERFUeL Extender System guarantees you dependable starting because your spark plugs are kept in "like-new" condition at all times!

5. Allows Use Of Lower Octane Fuel!

"Octane-robbing" carbon deposits are removed and because **Myron's POWERFUeL Fluid** is equivalent to 140 plus octane, you can safely use a lower octane fuel!

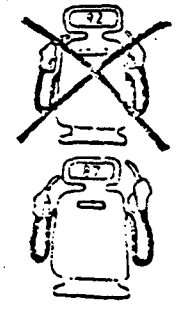

6. Eliminates Most Engine "Knocking".

7. Eliminates Engine Hesitation.

8. Eliminates Most Engine "Dieseling".

"When your car's engine isn't running right, it's working against itself!!"

"**Myron's POWERFUeL Extender** could be your spark plugs' best friend!"

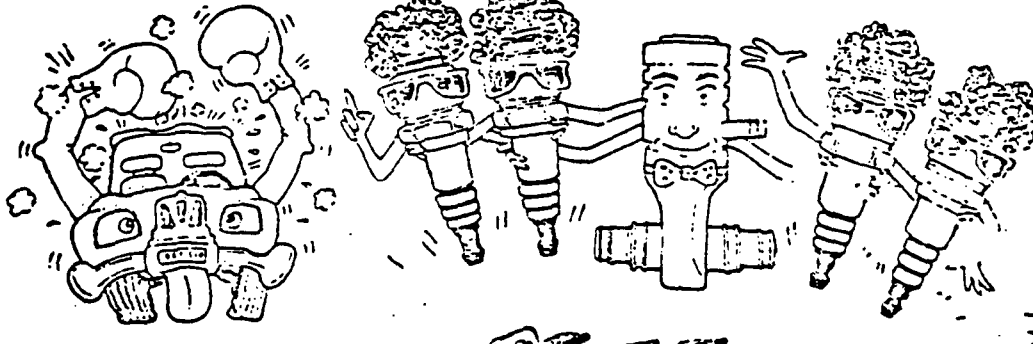

9. Extends Engine Life.

(provides cooler engine operation)

Because your engine doesn't fight against itself, the **POWERFUeL Fluid** lowers the peak operating temperatures which extends engine life!

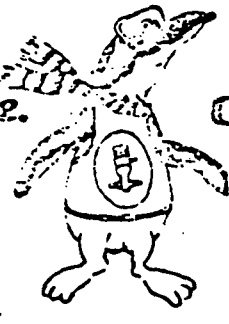

10. Makes Car Owner Happy!

Your car is capable of giving you more. Why not let it and **save $ $ $** as well?!!

Copyright ©1991 Auto Economy Venture, Inc.
Sonna Valley, NY/(914) 352-2240

How it works:

The harder you press on the accelerator, the higher the engine's octane requirement is.

If the engine octane requirement is higher than the the octane supplied by the fuel...knocking and pinging and engine damage occur.

The higher temperature fractions of gasoline form carbon deposits inside the engine that also raise the octane requirements of the engine.

Our POWERFUeL Extender System introdces a proprietary 140 + octane fluid at the proper time and in the exact proportions to raise the average octane level of the fuel—above the engine's octane requirements. It is simple to install and foolproof in design.

Unlike costly High Test gasoline and octane boosters currently available; that are used up when the gas tank empties. POWERFUeL Extender System lets YOU control the use and flow of the fluid (higher octane materials).

YOU ONLY USE WHAT YOU NEED! None is wasted! One pint lasts many, many tankfuls.

Also incorporated in the POWERFUeL Fluid are:

1. **Detergents** that remove engine deposits; thus lowering engine octane needs and extends tune-up cycles.
2. **Inhibitors** that protect engine components from corrosive chemicals found in all grades of gasoline.
3. **Lubricants** that reduce friction in the upper cylinder and provide longer engine life and more efficient fuel utilization.
4. **Fire retardants** even though POWERFUeL Fluid contains over 6,000 BTU's per gallon at room temperature the POWERFUeL Fluid will extinguish any match placed in it—in other words POWERFUeL Fluid does not support combustion at room temperature!
5. **Coolants** that lower peak operating temperatures at the proper instant—thus increasing the power stroke and extending engine life.

Questions you might ask & Answers you should know!

Q. What are the benefits and what will I notice?
A. Smoother performance, more power, eliminates the need for two out of three tune-ups, engine runs cooler and prolonged engine life.

Q. Does it work in the same way with leaded or unleaded fuels?
A. Yes.

Q. How often does the additive need to be replaced:
A. One pint will last approximately 1,500 miles of normal driving.

Q. Can I use a lower octane gasoline?
A. Yes.

Q. How soon will I notice a change?
A. Immediately.

Q. What if I change vehicles? Can I move the system to the new vehicle?
A. Yes.

Q. Can I install the POWERFUeL EXTENDER System myself?
A. Yes, in approximately 10 minutes, by following the simple instructions

Q. Will this chemical freeze in the winter?
A. No. Freezing point in minus 60° F.

Q. What is the difference between this system and the "stuff" you throw into the gas tank?
A. The other fluids are not controlled, and act for a very short time period.

Q. Will this raise the octane in the gasoline I use?
A. Yes, but only when the POWERFUeL Extender dispenses the Extender Fluid.

Q. Does the system have any effect on the lubrication system?
A. Yes, the Extender Fluid contains upper cylinder lubricants and rust inhibitors.

Q. Does this product work as well on new cars as on old cars?
A. Yes.

Q. Can it be placed on a vehicle other than a car?
A. Yes, it works as well on trucks, buses and boats.

Q. What happens if I run out of fluid?
A. Your engine will return to its previous condition before installation of the POWERFUeL Extender.

(NOTE: A good solution is to keep a spare bottle in your car.)

WARRANTY

The POWERFUel Extender is warrantied against all manufacturing defects for a period of one year.
MFG. By Auto Economy Venture, Inc. / Spring Valley, N.Y.
Copyright 1982 by Auto Economy Venture, Inc.

INSTRUCTIONS

- Remove PCV Hose at Carburetor. (A).
- Install POWERFUeL Valve (B) into (A).
- Install Original Hose (C) to other end of (B).
- Mount POWERFUeL Bottle Reservoir Holder (D) 1" (one inch) below (B), with either screws or straps supplied.
- Install POWERFUeL bottle (F) into (D).
- Install Hose Pickup (E) into POWERFUeL Bottle.
- Remove Hose (E) from nipple (G). Start Engine and Run Engine until warm.
- Install Hose (E) to Nipple (H) Run Engine for 15 seconds or until 1/4 of bottle is used, then remove Hose Pickup (E) from Nipple (H).
- Shut Engine off. Replace hose (E) to Nipple (G) and replace Cap (I) to Nipple (H).

Take YOUR NEW CAR for a roadtest.

TO CONTROL FLUID FLOW

- Remove Hose (E) at (G).
  - **A** Push Fluid Controller (J) in 1 sixteenth of a inch or one notch to slow fluid flow.
  - **B** Pull out Fluid Controller (J) 1 sixteenth of a inch or one notch to increase fluid flow.
- Drive 100 miles of normal driving, check reservoir and repeat (2) if necessary.

MPORTANT:

hen changing to a new bottle of OWERFUeL FLUID always change filter upplied with new bottle)

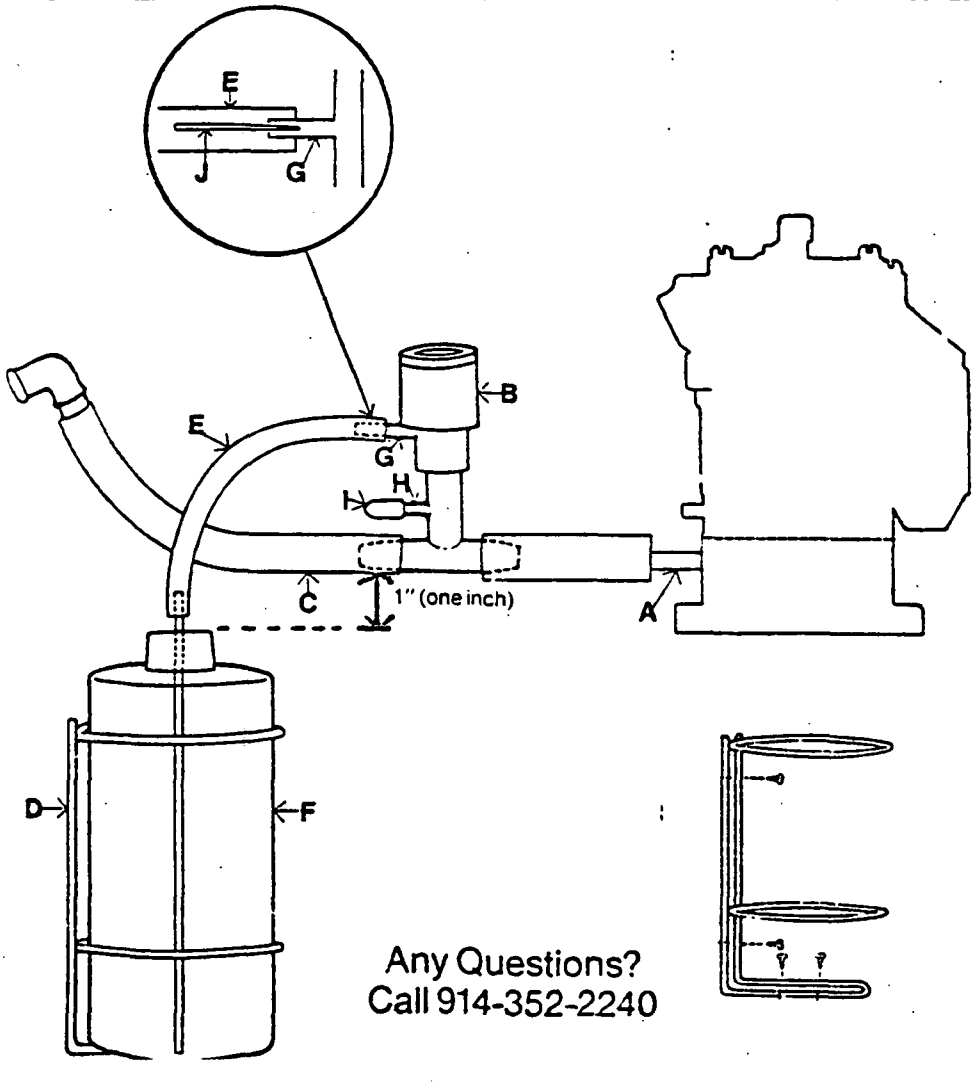

Any Questions?
Call 914-352-2240

UNITED STATES ENVIRONMENTAL PROTECTION AGENCY
ANN ARBOR, MICHIGAN 48105

ATTACHMENT E

November 4, 1982

OFFICE OF
AIR, NOISE AND RADIATION

Mr. Joe Farkas, Senior Vice President
Technology and Administration
Auto Economy Venture, Inc.
P.O. Box 434
Spring Valley, NY 10977

Dear Mr. Farkas:

We have performed a preliminary review of your October 7, 1982 application for an EPA evaluation of the POWERFUeL retrofit device. Our review also included all information on the device which was previously submitted. Based upon our preliminary review, we have noted the following concerns:

1. Section 3.b. of your application refers to an "EPA approved gasoline additive". I would like to stress that EPA does not "approve" fuel additives or any other retrofit device. The fuel additive waiver granted by EPA to Sun Petroleum Products Company does not constitute an approval/endorsement of that product.

2. Please provide the chemical composition and the percentage by weight of each constituent of POWERFUeL fluid, as sold to purchasers of your device. Additionally, describe those differences between POWERFUeL fluid and the fuel additives of Oxinol, Sun Petroleum Products, and Goodyear which were referred to in the supporting attachments.

3. Does Auto Economy Venture Incorporated manufacture the POWERFUeL fluid in addition to the vacuum valve? If another company manufactures the POWERFUeL fluid, in the composition as sold to consumers, please submit a letter from that company which authorizes you to have their fluid evaluated by EPA.

4. What material are the vacuum valve "O" rings? Have you data showing that the material is compatible with the POWERFUeL fluid over a long term basis?

5. The patent application shows the vacuum valve flow restrictor hole as being different in design from that depicted in the installation instruction sheet. Does this mean the application for evaluation applies to more than one design? Are different models available?

6. Does your application for evaluation also apply to the two-valve configuration shown in Figure 4 of your patent application?

7. Your application states that no tools are needed for device installation. Yet, the installation instructions attached to your letter of August 10 indicate that at least a knife, screwdriver, and drill are required. Please clarify this apparent discrepancy.

8. After the initial installation of the device, is mileage accumulation required before certain benefits are realized? If so, how many miles must be driven?

9. Where will replacement POWERFUeL fluid be purchased and at what price?

10. Based on our understanding of the device, there are three possible positions for the vacuum valve checkball (item 60 in Figure 3 of patent application) as follows:

    a. Checkball sealed against "O" ring 62 (no POWERFUeL fluid or air bleeding).

    b. Checkball not sealed against either "O" rings 62 or 64 (both POWERFUeL fluid and air bleeding).

    c. Checkball sealed against "O" ring 64 (POWERFUeL fluid bleeding only).

    Is our understanding correct? If so, then it would seem that even if the POWERFUeL fluid were depleted, there would still be air bleeding in positions b and c. Thus, this would be contrary to your statement that the engine returns to its previous condition (before device installation). Please clarify or confirm our understanding.

11. We have examined the two sample devices you submitted and have noted the following for both of them. First, the plastic line which is inserted into the fluid bottle has attached to it a metal clip which is apparently intended to prevent the line from sliding out of the bottle cap. The clip appears to have cut a hole into the line and thereby allows air to bleed into the line. This, of course, could affect the flow rate of the liquid leaving the bottle. Second, the checkball does not completely seal against either "O" ring regardless of the vacuum signal applied to the vacuum valve (by means of ports 28 or 32 in Figure 1). For this reason, there is a continuous air bleed (of varying magnitudes) regardless of the checkball position. These two phenomenas differ from the operation of the device as described in the patent application. Are the sample devices functioning as intended? Please clarify these apparent discrepancies.

12. You have claimed several benefits for the device. However, you have not submitted any data that substantiates any of the claims. The following comments address specific claims.

a. You provided no fuel economy data nor do you make any specific percentage improvement claims. How much improvement do you claim? The exhaust emission data that was submitted was not generated using FTP or HFET procedures as described in the documents I sent you previously. Further, considering that the supporting documents to your application suggest mileage accumulation is necessary before some benefits are realized, any test program for your device should include mileage accumulation. The data you submitted does not show that mileage accumulation was part of the test program.

b. To substantiate the claims for increased power and acceleration, data should be obtained from dynamometer and/or track tests.

c. Your letter of August 10 states that upon installation of the device, there was an immediate decrease in emissions. Therefore, you concluded the POWERFUeL fluid had cleaned the various deposits from the combustion chamber. Because additional oxygen was added to the air-fuel mixture (from the vacuum valve air bleed and the alcohol) and also because of the cooler combustion temperatures (due to the fuel additive) we would expect an immediate change in emissions, even without removal of the deposits. To substantiate the claim for cleaner engines and less engine wear, it seems the engines would have to be disassembled and checked for deposits and wear at various exposure intervals.

d. On what basis is the claim made for extended maintenance intervals? Have you run vehicles for prolonged periods of time with your device?

After you have provided the information requested in this letter, we will assist you in developing an appropriate test program for your device. So that we may evaluate your device in a timely manner, I ask that you respond to this letter by November 24. Should you have any questions or require further information, please contact me.

Sincerely,

Merrill W. Korth

Merrill W. Korth
Device Evaluation Coordinator
Test and Evaluation Branch

Attachment F

Auto Economy Venture
P.O. Box 434
Spring Valley, N.Y. 10977

914-352-2240

Dec. 3, 1982

Mr. Merrill W. Korth
Device Evaluation Coordinator
Test and Evaluation Branch
US Environmental Protection Agency
Motor Vehicles Emissions Laboratory
2565 Plymouth Road
Ann Arbor, MI 48105

Dear Mr. Korth:

As per our recent telephone conversation, I would like to thank you for the allowed delay in answering your Nov.4, 1982 letter with its questions.

I and Myron Stein have carefully reviewed your letter and have formulated the following answers and clarifications. The numbers relate to your concerns as per the letter of Nov. 4, 1982.

1. We are sorry for the inadverdent oversight which occured regarding the "EPA approved" phrase. We now understand the regulatory functions that you provide and oversee.

2. The POWERFUeL fuel additive has the following nominal composition expressed in Weight percent: methanol-15.5, 1-buthanol-2.3, non-ionic surfactant(i.e. Union Carbide Tergitol S7)-0.4, Water-balance. The Goodyear fuel additive is virtually identical to the POWERFUeL one whereas the Sun Chemical Products and Oxinol fuel additives consist primarily of t-buthanol and methanol without any water.

3. Auto Economy Venture Inc, has the POWERFUeL fuel additive custom manufactured by a local automotive fluids bottler under contract to us. Therefore, the POWERFUeL fuel additive is considered as made by us and no permission from the bottler is required.

4. The "O" ring in the valve is made from Buna-N rubber by a local molder. Standard material compatibility charts (derived from time and accelerated corrosion resting) list Buna-N rubber as compatible with methanol and 1- buthanol. Furthermore, the solvency and swelling power of these alcohols decreases dramatically with just a few percent water. Therefore, the Buna-N rubber in this application is obvious which fact has also been verified by over two years of operation in this application without a single failure of the "O" ring.

5. The application for evaluation applies to the design in your possesion. There is only one model avaialble. The mere fact that the patent drawings differ slightly from the device as reduced to practice, is a result of a necessary improvement on the original to allow a variable flow by the tapered insert so that the valve can be used on a variety of engines and needs.

6. The application evaluation applies only to the one valve configuration reduced to practice as supplied to you.

7. There is no apparent discrepancy. It is possible to install the device either way. A professional mechanic would do it with the tool mentitoned whereas the general public or amateur would do it with the clips/straps provided.

8. A mileage accumulation of 10-20 miles may be necessary for engines with unusually thick deposits before the benefits are realized. For "normally" maintained engines, the benefits are realized after a few minutes, about 5, of operation which include a few cycles of acceleration/decceleration so that priming of the valve occurs.

9. Replacement POWERFUeL fuel additive may be purchased directly from us at $4.95/pint or from any number of distributors now in the process of being established.

10. Your understanding of the "O" ring-checkball arrangement is correct, furthermore, if the fluid is depleted, air would leak in through positions b and c. However, the maximum orifice size is 0.090" dia.(prefered 0.041) which results in an orifice cross sectional area of 0.006362 inch square as compared to the carburetor throat opening of 2" or a cross flow sectional area of 3.1416 inch square. Since both orifices are at the same pressure during acceleration, the flowrates are proportional to the cross flow areas. In this case an area ratio of about 500 (493.8) to 1 exists which means that in the case of depleted fluid, the flowrate of air through the valve is about 0.2% of the carburator flowrate. This amount is less than the design precission of the engine air intake system. Furtehrmore, a dirty air filter would decrease air flow by much more than 0.2%. Thus the statement that the device would return the engine upon fluid depletion to pre-device installation conditions is still valid. Remember that the valve operates only if the vacuum falls below the 3" needed to switch it on. This condition occurs only during hard accleration or a small portion of the time that the engine operates.

11. Your observation that the tube from the reservoir has a metal clip attached beneath the bottle cap to prevent it from sliding out, is correct. The hole by the clip is intentional, not accidental as it appears to be. Its function is to prevent syphoning of the fluid in case the fluid reservoir is misinstalled, i.e. higher in elevation than the valve-see installation instructions. The hole also prevents hydraulic lock when the engine is shut off. This works in conjunction with the oversize hole in the bottle cap which also prevents vacuum build-up in the bottle, thus uncontrolled flow of fluid to the engine. These two leaks will affect flow and thus they have been considered and compensated for in the design of the entire system. The checkball seal against the "O" ring will work properly when the valve has the fluid running through it as intended. The proper seal is based on the retention of the fluid on the surface of the checkball and "O" ring due to surface tension. In the dry state the device might leak as you indicated, however this mode is not the intended operating mode.

Thus the samples sent to you are operating properly unless an early and unpredictable failure occured. If you think that this is the case, we will send you more samples upon your request.

12. a. The percentage improvement for the fluid/device system, when properly installed, may range from 0-20%. This depends on such factors as accumulated mileage, state of maintenance of the engine/transmission, catalytic converter, gasoline used, driving habits, etc. As for the exhaust emission data, it was not generated using FTP or HFET procedures because as mentioned before by Myron Stein, the 3" or less of vacuum necessary to operate the device does not occur in these procedures, thus the be efits otainable are not possible because conditions for it do not occur. Furthermore, those test use a fuel of substantially higher octane rating (about 98) which alleviates most of the problems (pinging, knocking, dieseling, etc.) for which the POWERFUeL system was designed. Rather, if tested with 87 octane rating fuel on actual roads with the "average public" driver, the POWERFUeL system will work as claimed. No substantial mileage accumulation is necessary for the benefits to be realized. As outlined earlier, only very dirty engines need a few miles to eliminate the carbon deposits. In our tests, with a substantial amount of random cars, a 5 min. operation with few on/off cycles for the valve, yielded a substantial reduction in emissions as measured with the New York State emissions equipment (Hamilton Standard, infrared dispersive energy type system). Similar results were obtained with the neibouring states (CT, NJ, PA) systems also.

b. R&D and dynamometer tests for alcohol/water mixtures injected into running gasoline engines have been performed by GM ARCO, FORD and many other concerns. Please refer to the extended reference list sent toghether with the application. I would like to call to your attention a late reference on alcohol fuels cited on page 52 of Chemical Engineering Progress, August 1982.

c. As shown earlier, the amount of fluid (be it liquid or gas) that is added to the engine via the POWERFUeL system is negligible when compared to the carburator intake. Thus your contention of additional oxygen entering the system is technically correct but practically insignificant. The significant feature of the POWERFUeL system is that it removes the carbon deposits in about 5 minutes and prevents their redeposition. Engines run under similar conditions have been disassembled and tested as per your mention by GM, ARCO, FORD shown in the extended bibliography sent along with the application. We have checked the cleanliness of the spark plugs in pre and post device installation from where our claims were verified.

d. Cars with over 120,000 accumulated mileage have been run with the POWERFUeL system installed on them for over two years. Over 1000 cars have the system for more than one year. No complaints on dissatisfaction or device failure occured. During a controlled testing schedule with a school bus fleet consisting of over 150 different buses, susbstantially less maintenance was required as evidenced by the fleet operators' testimonials, copies sent to you with the application.

As you can see, the POWERFUeL system is a well thought-out and designed system.

The President, Myron Stein, is often in the northern Ohio area, a couple of hours driving distance from your facilities. Should you desire, he can make a side trip to your offices to further discuss this project and application.

As per your offer, we are expecting to hear from you in terms of assistance for developing an appropriate test program for the POWERFUeL system.

Should you have any questions, please do not hesitate to contact me. You are most likely to reach me by phone at (914) 735-7620.

Very truly yours,

Joe Farkas
Senior VP-Technology

JF/ab

cc: Myron Stein

UNITED STATES ENVIRONMENTAL PROTECTION AGENCY

ATTACHMENT G

ANN ARBOR, MICHIGAN 48105

December 28, 1982

OFFICE OF
AIR, NOISE AND RADIATION

Mr. Joe Farkas, Senior Vice President
Technology and Administration
Auto Economy Venture, Inc.
P.O. Box 434
Spring Valley, NY 10977

Dear Mr. Farkas:

We have received your letter of December 3, which responded satisfactorily to the questions in our preliminary evaluation of November 4. We can now provide you with a recommended test plan for your Powerfuel device.

Based on our understanding of the product, we recommend that you test two randomly selected, late model vehicles. The test vehicles should be selected from the list in the document entitled "Suggested Test Vehicle Engines for 511 Applicants". This listing was previously sent to Myron Stein along with other test information. A copy is enclosed for your convenience. Two vehicles are the minimum recommended for testing. If the test results are not statistically significant, i.e., less than 6% improvement, then additional vehicles will need to be tested. Adjustments to the engine parameters subsequent to those made during initial preparation of the vehicles are not permitted.

The vehicles should be tested using Test Plan C and Test Sequence 1 from the enclosed test plan. Please note that at each point during the testing where mileage accumulation is indicated, the vehicles are to be subjected to ten miles of on-road driving which includes several full throttle accelerations. All features (e.g., route, trip length, number and severity of accelerations, number of stops, cruise speeds, time, etc.) of each mileage accumulation portion are to be performed identically.

With respect to test fuel, you may use any commercially available pump fuel meeting the following requirements:

1. The fuel must be from a major supplier (e.g., Mobil, Shell, Texaco).

2. It must meet the octane and lead requirements recommended by the manufacturer of the test vehicle.

3. The fuel must be of a blend appropriate to season for the test location selected.

4. For each car, fuel from the same batch must be used throughout the program.

I appreciate your concern regarding whether the FTP and HFET procedures are appropriate for testing since your device is only activated at less than 3 inches of manifold vacuum. It has been our experience that such levels are realized by some vehicles during the test procedures and most vehicles on the road seldom experience full throttle. During a telephone conversation with Myron Stein on December 16, he stated that the benefits caused by the device endure for some time (ten miles or more) after the vehicle resumes normal operation. As a result, we feel the laboratory test procedures are appropriate for the evaluation of Powerfuel.

I am looking forward to reviewing the results of your testing. I will expect them by February 14. Should you have any questions or require additional information, please contact me.

Sincerely,

Merrill W. Korth

Merrill W. Korth
Device Evaluation Coordinator
Test and Evaluation Branch

Enclosures