EPA-AA-TEB-511-87-1

EPA Evaluation of the Emission Control Device of DeAcc Devices Inc. (DeAcc ECD) Under Section 511 of the Motor Vehicle Information and Cost Savings Act

by

Edward Anthony Barth

June 1987

Test and Evaluation Branch
Emission Control Technology Division
Office of Mobile Sources
U.S. Environmental Protection Agency

06560-50]

ENVIRONMENTAL PROTECTION AGENCY

[40 CFR Part 610]

[AMS-FRL _____]

FUEL ECONOMY RETROFIT DEVICES

Announcement of Fuel Economy Retrofit Device Evaluation for the "Emission Control Device" of DeAcc Devices, (DeAcc ECD)

AGENCY: Environmental Protection Agency (EPA).

ACTION: Notice of Fuel Economy Retrofit Device Evaluation.

SUMMARY: This document announces the completion of the EPA evaluation of the DeAcc ECD device under provisions of Section 511 of the Motor Vehicle Information and Cost Savings Act. The notice also announces our findings, conclusions, and the availability of the report.

FOR FURTHER INFORMATION CONTACT:

Merrill W. Korth
Emission Control Technology Division
Office of Mobile Sources
Environmental Protection Agency
2565 Plymouth Road
Ann Arbor, Michigan 48105
Telephone: (313) 668-4299

SUPPLEMENTARY INFORMATION:

I. Background

Section 511(b)(1) and Section 511(c) of the Motor Vehicle Information and Cost Savings Act (15 U.S.C. 2011(b)) requires that:

(b)(1) "Upon application of any manufacturer of a retrofit device (or prototype thereof), upon the request of the Federal Trade Commission pursuant to subsection (a), or upon his own motion, the EPA Administrator shall evaluate,

in accordance with rules prescribed under subsection (d), any retrofit device to determine whether the retrofit device increases fuel economy and to determine whether the representations (if any) made with respect to such retrofit devices are accurate."

(c) "The EPA Administrator shall publish in the Federal Register a summary of the results of all tests conducted under this section, together with the EPA Administrator's conclusions as to -

(1) the effect of any retrofit device on fuel economy;

(2) the effect of any such device on emissions of air pollutants; and

(3) any other information which the Administrator determines to be relevant in evaluating such device."

EPA published final regulations establishing procedures for conducting evaluations of fuel economy retrofit devices on March 23, 1979 [44 FR 17946].

II. Origin of Request for Evaluation, Device Descriptions and Report Identification:

On February 7, 1986, the EPA received a request from DeAcc Devices, Inc. for evaluation of the DeAcc ECD as a fuel saving device with reduced emissions. This device consists of a small gas mixing chamber with lines that are connected to the air intake, exhaust manifold, intake manifold and PCV valve of the engine. The device is claimed to reduce emissions and improve fuel economy by completely burning the blow-by gases.

Report: "EPA Evaluation of the Emission Control Device of DeAcc Devices, Inc. (DeAcc ECD) Under Section 511 of the Motor Vehicle Information and Cost Savings Act". Report Number EPA-AA-TEB-511-87-1 contains the analysis and conclusions and consists of 17 pages plus attachments A-Q."

As part of the evaluation process, the applicant conducted screening tests at an independent laboratory using EPA approved protocols. This independent laboratory testing is described in this report.

III. Availability of Evaluation Reports

Copies of this report may be obtained from the National Technical Information Service by using the above report numbers. Address requests to:

National Technical Information Service
U.S. Department of Commerce
Springfield, VA 22161
Telephone: (703) 487-4650 or FTS 737-4650

IV. Summary of Evaluation

EPA fully considered all of the information submitted by the device manufacturer in the Application. The evaluation of the DeAcc ECD was based on that information and the results of the screening tests conducted for the applicant at an independent laboratory using EPA approved protocols. These tests consisted of replicate Federal Test Procedure (FTP) and Highway Fuel Economy Test (HFET) on two vehicles both with and without the device.

The FTP and HFET test data were analyzed by the analysis of variance (ANOVA) technique to determine if the data indicated that there was a statistically significant difference in emissions or fuel economy due to the device. For the FTP and HFET, although the device reduced NO_x emissions, there was an increase in FTP CO emissions and a

fuel economy penalty for the FTP. The HFET CO emissions indicated an overall improvement; however, one of the two vehicles showed an increase in CO emissions. The increase in HC emissions for both driving cycles and changes in HFET fuel economy for the device were not statistically significant.

Since vehicles are designed to meet the emission standards for HC, CO, and NO_x, our policy in evaluating emissions and/or fuel economy devices is that a device must not show an adverse effect in any emissions and fuel economy tests and second must show a significant improvement. Clearly, the DeAcc device did not pass these criteria and thus, EPA did not proceed to the in-house testing phase. The NO_x reduction with the device can reasonably be attributed to the increase in exhaust gas recirculation (EGR) rather than the postulated catalytic reactions in the copper line of the device. This effect on NO_x could be achieved by recalibrating the EGR valve.

The overall conclusion is that the DeAcc device did not improve emissions or fuel economy.

Date

J. Craig Potter
Assistant Administrator
for Air and Radiation

EPA Evaluation of the Emission Control Device of DeAcc Devices, Inc. (DeAcc ECD) Under Section 511 of the Motor Vehicle Information and Cost Savings Act

The Motor Vehicle Information and Cost Savings Act requires that EPA evaluate fuel economy retrofit devices and publish a summary of each evaluation in the Federal Register.

EPA evaluations are originated upon the application of any manufacturer of a retrofit device, upon the request of the Federal Trade Commission, or upon the motion of the EPA Administrator. These studies are designed to determine whether the retrofit device increases fuel economy and to determine whether the representations made with respect to the device are accurate. The results of such studies are set forth in a series of reports, of which this is one.

The evaluation of the "DeAcc ECD" was conducted upon the application of the manufacturer. The device is a small gas mixing chamber with four lines that are connected to the air filter, exhaust manifold, intake manifold, and PCV valve of the engine. The device is claimed to improve fuel economy and control emissions.

1. Title:

   Application for Evaluation of the Emission Control Device of DeAcc Devices, Inc. (DeAcc ECD) Under Section 511 of the Motor Vehicle Information and Cost Savings Act

---

The information contained in sections two through five which follow, was supplied by the applicant.

---

2. Identification and Marketing Information:

   a. Marketing Identification of the Product:

      "Emission Control Device" and DeAcc Devices, Inc. will be used for manufacturing.

b. Inventor and Patent Protection:

(1) Inventor

Stephan DePakh, President
DeAcc Devices Inc.
90 Warren Road
Suite 110
Toronto, Canada M4V 2S2
Telephone (416) 923-1248

(2) Patent

US. Patent Number: 4,512,325
Canadian Patent Number: 1,174,920

c. Applicant:

(1) Name and address
DeAcc Devices, Inc.
90 Warren Road
Toronto, Canada M4V 2S2

(2) Principals
Stephen DePakh, President and owner

(3) Stephen DePakh is authorized to represent DeAcc Devices Inc. in communication with EPA

d. Manufacturer of the Product:

(1) Name and address

DeAcc Devices, Inc.
90 Warren Road, Suite 110
Toronto, Canada M4V 2S2

(2) Principals
Stephen DePakh, President and owner

3. Description of Product:

a. Purpose:

Auto emission control and fuel economy

b. Applicability:

"The applicability of the device is for all makes, all models, all engine sizes and carburetion, all model-years, all transmission types, all ignition types."

c. Theory of Operation:

The applicant used the US Patent abstract for the device to explain the device theory of operation.

"This invention provides the combination of a gas-mixing chamber, and a first conduit connected to the crankcase of an engine and passing through the chamber in noncommunicating fashion, the conduit then extending out of the chamber and returning to open into the chamber. The first conduit is of copper or at least has its inner wall made of copper. A second conduit leads from the chamber and connects to the intake manifold of the engine. A third conduit leads from the chamber and receives heated gas from the exhaust pipe or manifold. A fourth conduit leads from the mixing chamber and is adapted for connection to the air filter of the engine."

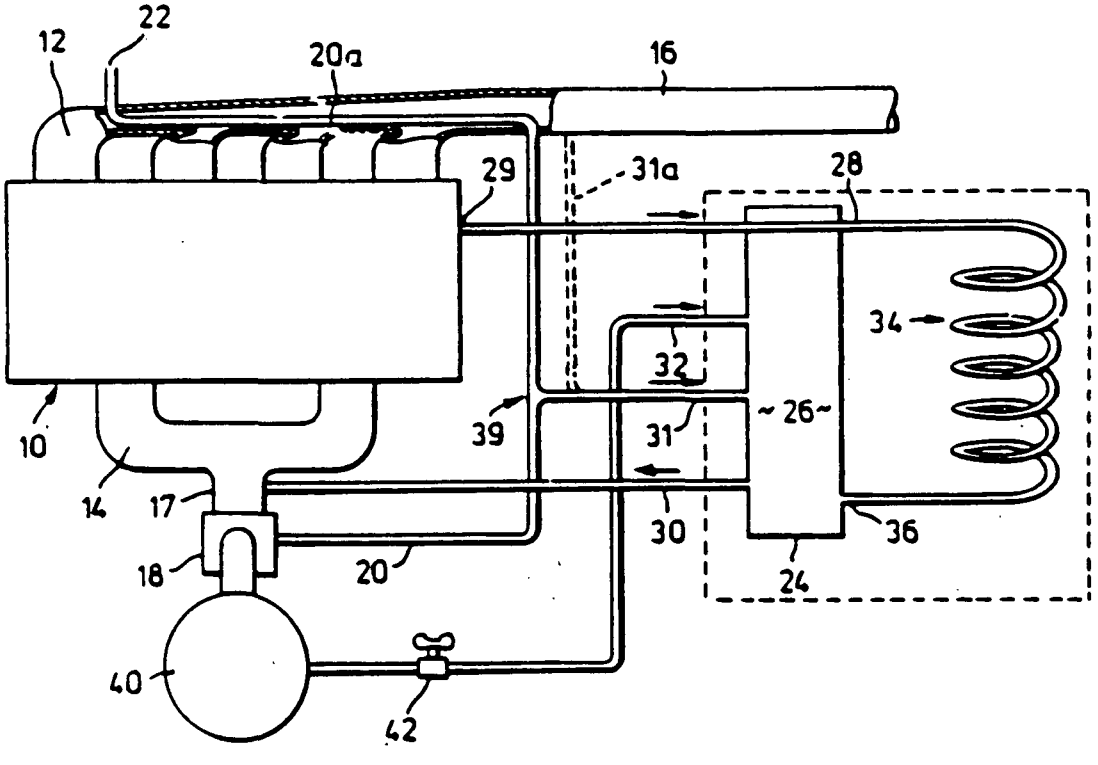

d. Construction and Operation:

"The device has a simple design and it can be affixed anywhere in the engine compartment. It has no moving parts (see above.) It has one control valve #42 manually adjustable. The device allows the engine to operate at peak capacity with no loss of power. The performance of the engine is more responsive and smoother. It does not require additional fuel to reburn the unused gases and vapours and operates at peak efficiency, both during acceleration and deceleration. Due to the total combustion afforded, the emission of pollutant reduction is up to total and no carbon deposits remain on pistons, valves, etc., automobile and like engines, and there is fuel saving."

e. Specific Claims for the Product:

This information was not provided with the application.

f. Cost And Marketing Information:

This information was not provided with the application.

4. Product Installation, Operation, Safety and Maintenance:

a. "The first conduit is connected to the crank case (P.C.V.);

b. The second conduit leads from the device gas chamber to the intake manifold;

c. The third conduit leads from the device gas chamber to the exhaust manifold;

d. The fourth conduit leads from the device mixing gas chamber to the air filter or the engine;

e. The above installation instruction is for all make/model/year engine, automobiles and like engines;

f. Required tools are:

-screw driver
-a clipper for a hole to be clipped on the air filter for the fourth conduit
-no required equipment to check the installation
-mechanical efficiency emission test to balance the carburetion with DeAcc Device (air fuel, mixture fuel).
-no special skills required with the installation of the device, a mechanic can do it."

g. Operation:

"To assure efficiency and mechanical operating efficiency, instructions will be furnished for its usage.

(1) Pre-tune the engine to the manufacturer's requirements,

(2) A lean condition in the engine is caused by excess air or too little fuel in the cylinders to promote complete combustion. This condition lowers the power output of the engine and that condition is one of the major sources of air pollution of an automobile engine, and there is no gas saving.

(3) Proper vehicle maintenance will decrease the amount of gasoline that is consumed and reduce the amount of pollutants and a DeAcc Device, will also save more fuel and depollute the engine."

h. Effects on Vehicle Safety:

"The device has no malfunction or unsafe condition to the automobiles or its occupants or persons or property in close proximity to the automobile."

i. Maintenance:

"To ensure continued correct operation, the DeAcc Device does not require maintenance. At the regular engine tune up, emission test required to ensure that there is no lean condition in the carburetion system."

5. Effects on Emissions and Fuel Economy:

a. Unregulated Emissions:

This information was not provided with the application.

b. Regulated Emissions and Fuel Economy:

"The applicant emission control device has no malfunction to emit pollutant like hydro-carbons, carbon monoxide, or oxides of nitrogen. The device treats the "blow-by gases" to be reburned and therefore normal atmospheric constituents such as carbon dioxide-water vapour in a quantity differing from that emitted in the operation of the automobile engine without the device."

c. Test Results:

"Provided all information on the effects of the device on vehicle emissions and fuel economy.

(1) The technical question of "catalytic action" of No. 34 (drawing figure) somewhat more difficult to answer, but I would like to make the following points:

(2) It was thought at one time that the "catalytic action" to be due to reduction of NO_x gases to nitrogen by Cu-tubing with subsequent oxidation to CuO or C.u.2 0', thus causing some decrease in NO_x, or interaction through the loop between HCs and NO_x

to N.2/S. I would like to point out that the device, while saving fuel, does not increase NO_x 2/S. My tests for CO at the exhaust while the engine is in idle show a large decrease in CO.

(3) The length of No. 28 (drawing figure) are to control direct flooding and the air/fuel (blow-by gases) mixture entering the cylinders has no adverse effect. Under deceleration and acceleration of the engine, the length of No. 28 eliminating direct flooding and not lower power output of the engine and show a large decrease of pollutant emission gases; therefore, it saves gasoline."

The following Sections are EPA's analysis and conclusions for the device.

---

6. Analysis

a. Identification Information:

(1) Marketing Information: The marketing identification of the product, Emission Control Device (Section 2a) is a generic name for a class of products and thus could lead to confusion. Therefore, to avoid confusion, EPA will identify the product as the Emission Control Device of DeAcc Devices, Inc., or DeAcc ECD.

EPA requested the applicant to clarify how a vehicle owner would obtain the device (Attachment F). The applicant stated that it would be sold through vehicle service and installation shops (Attachment G).

b. Description:

(1) The primary purpose of the device was clarified to be to improve"...emission and fuel economy by recycling the so

called blow by gases and use it as an added fuel with the engine system and reburn it in the combustion process in the individual cylinders, with the emission gases: CO, HC, NO_x" (Attachments F and G).

(2) Applicability. The applicability of the device, as stated in Section 3b to essentially all carbureted, gasoline powered vehicles is judged to be reasonable. That is, it is possible to install the device on these vehicles.

(3) The theory of operation given in Section 5(c) describes the device but does not provide a theory of operation. The US patent Section 2b(2), Attachment A, and Construction and Operation Section 3d do not give a clear and concise explanation of how the device functions and how it is an improvement over a PCV valve. EPA requested additional clarification (Attachment F). However, the information provided indicates that the device functions similar to the standard PCV valve, i.e., both recyle crankcase gases into the intake manifold through the PCV valve (Attachment G). The applicant considers catalytic reactions in the copper tube to be plausible explanation for the reduction of nitrogen oxides to nitrogen. However, the additional EGR obtained by tapping the exhaust manifold gases and the possible changes in fuel/air ratio due to bleed-air of the device are a more probable cause for any changes in nitrogen oxides observed.

(4) The description of the device provided by the patent, figures, and installation information adequately describes the device design.

(5) Specific claims for device: The application made no claims for the device other than auto emission control

and fuel economy. EPA requires this information in order to judge the efficacy of a device and develop test plans. Therefore, we requested the applicant to state his specific claims for the device including the improvements in emissions and fuel economy (Attachment F).

The applicants response:

> "The improvements are in emission and fuel economy by recycling the so called 'blow by gases' and use it as an added fuel with the combustion process in the individual cylinders , with the emission gases: CO, HC, NO_x" (Attachment G).

did not provide specific criteria to judge the performance of the device. However, this was discussed with the applicant and he stated that he expected the device to achieve better than a 6 percent improvement in emissions and fuel economy. The test plan for the independent laboratory testing of the device was developed using six percent as the criteria in selecting the number of vehicles and number of tests (Attachment F).

(6) The cost of the device plus installation: In response to the EPA request for cost information (Attachment F), the applicant provided a detailed listing of the manufacturing costs. The retail cost of the device was projected to be initially $97, dropping to $78 in volume production. However, as discussed further in Section 6c(1) below, the installation of the device would probably take several hours rather than the few minutes the applicant suggests. Since installation is to be done by a

mechanic or service shop, the installation cost would probably range from $60 to $90 depending on time and labor rates.

c. Installation, Operation, Safety and Maintenance:

(1) Installation - Instructions, Equipment and Skills Required: The installation information provided in Section 5c(1) is only an overview, therefore, additional and expanded information was requested and provided (Attachments F and G). This information was in much greater detail and was consistent with earlier information. However these instructions present some inherent problems.

First, few vehicles have a convenient access port to tap as the source of exhaust gas required by the device. Only a few older vehicles used the manifold choke tube suggested as a source of exhaust gas. The EGR valve would also be a poor choice because of the difficulty in tapping into the exhaust gas at this point and the adverse effect any added plumbing would have on the calibration of the valve. The suggested method of welding a pipe or fitting to manifold presents several problems. The applicant provides no guidance as to the proper functional (location for proper exhaust gas flow) or mechanical location of this port. A poor mechanical choice could lead to warped/damaged exhaust manifolds. Drilling an exhaust gas port through the welded fitting or drilling and tapping the manifold create a potential problem with the drill filings if the manifold is not removed, since the filings could lodge in the EGR valve and/or enter the induction system through the EGR valve.

A second problem is the proper adjustment of the manual valve installed in the line connecting the device to the air filter. Any vehicles using closed-loop (feedback) control of the

engine/fuel induction system operating conditions during idle-deceleration would tend to automatically compensate for these adjustments.

The instructions provided in the application and correspondence need to be organized and put into a formal set of installation instructions for enclosure with the device.

In past discussions, the applicant has indicated that the device could be installed in a few minutes. EPA judged this to be unlikely with the installation and mounting of the gas mixing chamber, connecting the four ports of the chamber to the engine (including the exhaust manifold), and adjusting the system with an emission analyzer. Several hours is a more reasonable estimate and was borne out in testing (Attachment M).

(2) Operation: The applicant's statement in Section 4(g) that the device functions automatically for the driver is judged to be correct.

(3) Effects on Vehicle Safety: Based on the patent application description and installation information provided, it is possible for the device to be fabricated and installed so that it is safe in normal vehicle operation. However, as noted in Section 6c(1) above, there are potential problems in obtaining the source of exhaust gases by tapping or welding the exhaust manifold that were not addressed by the applicant.

(4) Maintenance: The maintenance requirements of Section 4d was clarified to be that essentially no maintenance was required (Attachments F and G). The applicant anticipated that only the idle CO emission checks performed during tune-ups would insure that the system

continued to function properly. However, this does not address the possible plugging of the extensions of the PVC line to the device and the induction system.

d. Effects on Emissions and Fuel Economy:

(1) Unregulated Emissions: The applicant submitted no test data and made no claims regarding unregulated emissions. The statements and data in Section 5 relate to regulated emissions and fuel economy only. However, since the design and installation of the device limits its effects to moderate changes in fuel/air ratio, exhaust gas recirculation (EGR), or positive crankcase valve flows, then the device should not significantly affect a vehicle's unregulated emissions.

(2) Regulated Emissions and Fuel Economy:

The applicant submitted test data conducted at an independent laboratory in accordance with the Federal Test Procedure and the Highway Fuel Economy Test. These two test procedures are the primary ones recognized by EPA for evaluation of fuel economy and emissions for light duty vehicles.*

The tests consisted of replicate FTP and HFET tests on two vehicles both with and without the device (a total of 8 tests).

*The requirement for test data following these procedures is stated in the policy documents that EPA sends to each potential applicant. EPA requires duplicate test sequences before and after installation of the device on a minimum of two vehicles in tests conducted by the applicant at an independent laboratory. A test sequence consists of a cold start FTP plus a HFET or, as a simplified alternative, a hot start LA-4 plus a HFET. Other data which have been collected in accordance with other standardized procedures are acceptable as supplemental data in EPA's preliminary evaluation of a device.

The FTP and HFET test data were analyzed by the analysis of variance (ANOVA) technique to determine if the data indicated that there was a statistically significant difference in emissions or fuel economy due to the device (Attachment P). For the FTP and and HFET, although the device reduced NO_x emissions there was an increase in FTP CO emissions and a fuel economy penalty for the FTP. The HFET CO emissions indicated an overall improvement; however, one of the two vehicles showed an increase in CO emissions. The increase in HC emissions for both driving cycles and changes in HFET fuel economy for the device were not statistically significant.

Since vehicles are designed to meet the emission standards for HC, CO, and NO_x, our policy in evaluating emissions and/or fuel economy devices is that a device must first not show an adverse effect in any emissions and fuel economy tests and second must show a significant improvement. Clearly, the DeAcc device did not pass these criteria and; thus, EPA did not proceed to the in-house testing phase. The NO_x reduction with the device can reasonably be attributed to the increase in exhaust gas recirculation (EGR) rather than the postulated catalytic reactions in the copper line of the device. This effect on NO_x could be achieved by recalibrating the EGR valve.

The applicant also submitted lab and road test data that indicated a benefit for the device. Although the tests may have been of value to the applicant, the tests were conducted under relatively uncontrolled test conditions.

The overall conclusion is that the DeAcc did not improve emissions or fuel economy.

8. Conclusions

EPA fully considered all of the information submitted by the applicant. The evaluation of the DeAcc ECD device was based on that information and the results of the screening tests conducted for the applicant at an independent laboratory using EPA approved protocols

The overall conclusion is that the DeAcc device did not improve emissions or fuel economy.

FOR FURTHER INFORMATION CONTACT: Merrill W. Korth, Emission Control Technology Division, Office of Mobile Sources, Environmental Protection Agency, 2565 Plymouth Road, Ann Arbor, MI 48105, (313) 668-4299.

List of Attachments

Attachment A	US Patent Number 4,512,325 (provided with 511 Application).
Attachment B	Canadian Patent Numbers 1,174,920 (provided with 511 application).
Attachment C	Letter of July 16, 1985 from EPA to DeAcc providing information on Section 511 process.
Attachment D	Letter of August 12, 1985 from Stephen DePakh of DeAcc Devices, Inc. to EPA requesting that EPA provide test vehicles and announcing this intention to reapply for evaluation.
Attachment E	Letter of August 19, 1985 from EPA to DeAcc responding to preceding letter (Attachment D).
Attachment F	Letter of April 30, 1986 from EPA to DeAcc requesting clarification and additional information regarding submitted application.
Attachment G	Letter of May 24, 1986 from DeAcc responding to preceding letter (Attachment F). Page 2 and the top half of page 3 of Attachment G are not included since they contained details of the manufacturing and marketing costs.
Attachment H	Letter of June 11, 1986 from Automated Customs Systems Inc. to DeAcc discussing independent lab testing of device.
Attachment I	Letter of July 24, 1986 from Arthur L. Smith, DeAcc Attorney, discussing independent lab tests.
Attachment J	Letter of July 9, 1986 from DeAcc to EPA discussing application clarification and independent lab testing.
Attachment K	Letter of August 8, 1986 from DeAcc to Automotive Custom Systems, Inc. (ACS) discussing their independent lab testing of the device.
Attachment L	Letter of August 8, 1986 from DeAcc to EPA discussing the independent lab testing of the device.

Attachment M	Letter of September 3, 1986 from ACS to DeAcc describing the independent lab tests and providing the data.
Attachment N	Letter of October 31, 1986 from DeAcc to EPA discussing the independent lab testing at ACS.
Attachment O	Summary tables of ACS lab tests of the DeAcc Device.
Attachment P	Statistical analysis of the emissions and fuel economy results for the DeAcc Device
Attachment Q	Letter of January 13, 1987 from EPA to DeAcc summarizing the analysis of the test.

Attachment A

The United States of America

The Commissioner of Patents and Trademarks

Has received an application for a patent for a new and useful invention. The title and description of the invention are enclosed. The requirements of law have been complied with, and it has been determined that a patent on the invention shall be granted under the law.

Therefore, this

United States Patent

Grants to the person or persons having title to this patent the right to exclude others from making, using or selling the invention throughout the United States of America for the term of seventeen years from the date of this patent, subject to the payment of maintenance fees as provided by law.

Acting Commissioner of Patents and Trademarks

Attest

United States Patent [19]

DePakh

[11] **Patent Number: 4,512,325**

[45] **Date of Patent: Apr. 23, 1985**

[54] **EMISSION CONTROL DEVICE**

[76] Inventor: **Stephan DePakh**, 90 Warren Rd., Suite 110, Toronto, Ontario M4V 2S2, Canada

[21] Appl. No.: **588,739**

[22] Filed: **Mar. 12, 1984**

[51] **Int. Cl.**[3] **F02M 25/06**

[52] **U.S. Cl.** **123/572**; 123/573

[58] **Field of Search** 123/572, 573, 574, 41.86

[56] **References Cited**

U.S. PATENT DOCUMENTS

3,362,386	1/1968	McMahon	123/573
3,846,980	11/1974	DePalma	123/573
4,269,607	5/1981	Walker	123/573

FOREIGN PATENT DOCUMENTS

115638	7/1926	Switzerland	123/573
2118861	11/1983	United Kingdom	123/573

Primary Examiner—Ronald H. Lazarus

Attorney, Agent, or Firm—Sim & McBurney

[57] **ABSTRACT**

This invention provides the combination of a gas-mixing chamber, and a first conduit connected to the crankcase of an engine and passing through the chamber in non-communicating fashion, the conduit then extending out of the chamber and returning to open into the chamber. The first conduit is of copper or at least has its inner wall made of copper. A second conduit leads from the chamber and connects to the intake manifold of the engine. A third conduit leads from the chamber and receives heated gas from the exhaust pipe or manifold. A fourth conduit leads from the mixing chamber and is adapted for connection to the air filter of the engine.

8 Claims, 1 Drawing Figure

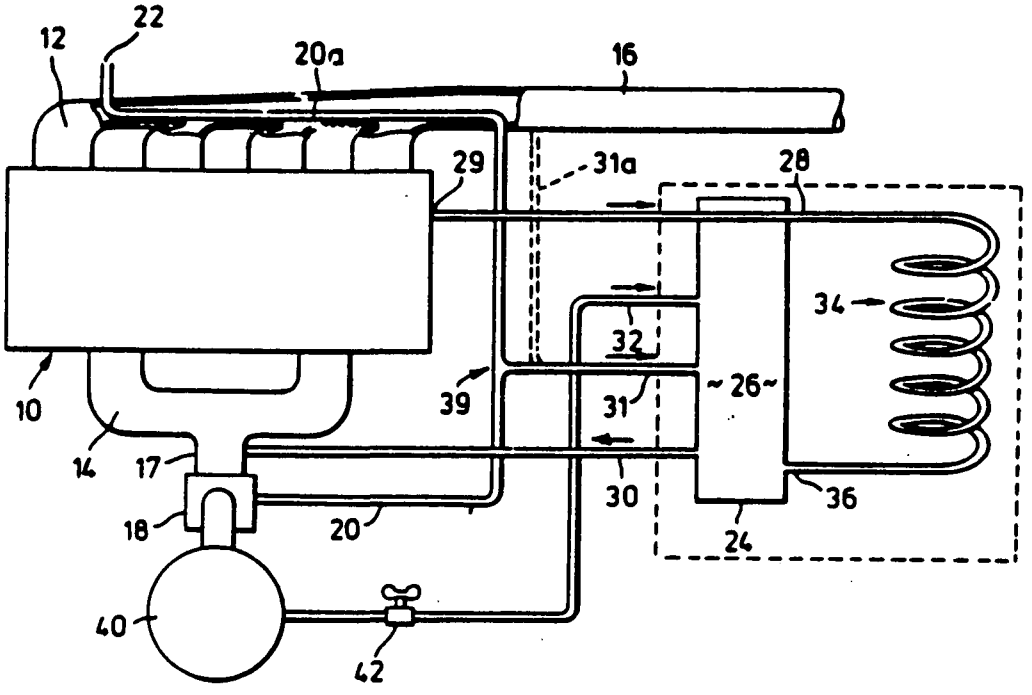

EMISSION CONTROL DEVICE

This invention relates to devices for reducing the emission of pollutant gases from reciprocating internal combustion engines.

It is well known that one of the major sources of air pollution from an internal combustion engine, particularly in an automobile, are the emission of gases resulting from so called "blow-by" of gases between the cylinder wall and piston rings into the crankcase. Such gases have commonly been vented to atmosphere through a suitable vent pipe.

In order to solve the problem of air pollution resulting from the above source, it has been proposed to couple the vent pipe leading from an engine crankcase to the intake manifold where vacuum conditions normally exist. Thus the pollutant gases are immediately drawn back into the intake manifold of the engine and are burned in the combustion process in the cylinders.

However, due to varying vacuum conditions in the intake manifold of an automobile engine, devices of known type have not proven successful. Typically, for example, a greater amount of blow-by is liable to occur during acceleration of the engine. Simultaneously, however, vacuum in the intake manifold decreases thus reducing the capacity of the engine to draw in the crankcase emissions. Also the addition of crankcase gases to the charge fed to the engine disturbs the air/fuel mixture entering the cylinders with adverse effects.

Further, some prior art devices, in addition to leading crankcase emissions directly into the intake manifold, have provided an air intake to the crankcase so that under condition of high vacuum, air could be drawn through the crankcase to ventilate it. However, such systems are considered dangerous due to the possibility of creating an explosive mixture of gases in the crankcase.

According to the present invention, in order to approach a solution to the above problems of prior art devices, there is a provided, in combination: means defining a gas-mixing chamber, a first conduit having one end adapted for connection to the crankcase of an engine, the primary conduit passing in non-communicating fashion through said chamber so that gases in said chamber contact the outside of the conduit, the conduit opening at its other end into said chamber, the first conduit being such that its inner wall is of copper, a second conduit leading from said chamber and being adapted for communication with the intake manifold of the engine, a third conduit leading from said mixing chamber and receiving a gas which has been heated by exhaust heat, and a fourth conduit leading from said mixing chamber and being adapted for connection to the air filter of the engine.

The invention is illustrated schematically in the attached drawing, which shows an internal combustion engine in plan, together with the various components of the accessory provided by this invention.

In the FIGURE, an engine 10 is seen in plan, and includes a head and a crankcase one above the other, such that they are in alignment in the view of the FIGURE. An exhaust manifold 12 and an intake manifold 14 of the usual construction are provided, the exhaust manifold 12 emptying into an exhaust pipe 16, and the intake manifold 14 being connected by a short pipe 17 to a carburettor/choke device 18. A line 20 extends from the choke of a carburettor/choke 18, and passes into

and along the exhaust manifold 12, ultimately opening at the location 22 through the wall of the exhaust manifold 12. The line 20 draws atmospheric air from the location 12 into the choke. By drawing it through the exhaust manifold 12, the atmospheric air is pre-heated.

The accessory provided by this invention is that illustrated within the broken-line rectangle in the FIGURE.

This accessory includes, in combination, means 24 defining a gas mixing chamber 26, a first conduit 28 having one end for connection to the crankcase of the engine 10, and second, third and fourth conduits 30, 31 and 32, respectively. The purposes of all of these conduits will become clear subsequently.

Returning to the first conduit 28, it will be seen that this passes in non-communicating fashion through the chamber 26 so that any gases in the chamber 26 can contact the outside of the conduit 28. This arrangement is made for heat-transfer purposes. The conduit 28 then has a relatively extended portion 34, the specific length of which will be dealt with later, following which it opens at its other end 36 into the chamber 26. The means defining the chamber 26 would typically be a metallic wall surrounding the chamber, and therefore the first conduit 28 opens at its other end through that wall.

The first conduit is such that its inner wall is of copper, and preferably the entire conduit 28 is of copper.

The second conduit 30 leads from the chamber 26, and in the FIGURE is connected to the pipe 17 which is a part of the intake manifold 14.

The third conduit 31 leads from the chamber 26 and makes a T-connection into the pipe 20 at the location 39.

The fourth conduit 32 leads from the chamber 26 and is adapted for connection to the standard air filter 40 of the engine.

Preferably, there is a control valve 42 provided in the fourth conduit 32.

It has been found that the first conduit 28 should be substantially about 7 feet (2.2 meters) in total length. Naturally, some variation from this ideal length is possible, but a reasonably lengthy first conduit 28 appears to be beneficial in terms of increasing the mileage of automobiles to which this accessory device is attached.

The second conduit 30 is that through which the mixture of gases within the chamber 26 passes into the pipe 17 and thence into the intake manifold 14. This conduit may be of rubber, and typically an inside diameter of 8 mm would be satisfactory for the rubber tube constituting this conduit.

The third conduit 31 is that which is connected to the engine choke pipe 20 with a T-connection, as aforesaid. In the solid line connection illustrated, the conduit 31 allows heated air from the pipe 20 to be drawn into the chamber 26. In certain instances of older engines, the portion 20*a* of the pipe 20 within the exhaust manifold 12 is rusted or cracked, and exhaust gases can be drawn into the pipe 20. This invention is also directly applicable to such a situation. It is not a disadvantage to draw exhaust gases into the chamber 26, since the exhaust gases often include certain unburned components, which can be drawn back through the engine and burned on a second pass. If the pipe 20 is not deteriorated in the portion 20*a*, or if the vehicle does not have such a pipe, then the alternative conduit 31*a* shown in broken lines may be employed. Conduit 31*a* is connected directly to and opens into the exhaust pipe 16 close to the exhaust manifold 12.

The third conduit 31 may be of rubber, and may conveniently be of rubber tubing with a 3 mm inside diameter. It will be understood that the third conduit 32 is essentially intended to tap a source of heat for the mixture within the chamber 26, although naturally the heat must be conveyed in a gas of some kind. The heated gas, whether air or exhaust fumes, is of course supplied by the pipe 20 or the conduit 31a.

The fourth conduit 32 is intended to draw filtered atmospheric air from the air filter 40 of the car, and the quantity of air being drawn in is intended to be adjusted by means of the valve 42.

The fourth conduit 32 may again be of a rubber tubing, conveniently having an inside diameter of about 5 mm.

A further connection may be made to the mixing chamber 26, which may be either closed or may be connected to a standard emission control device. Such a connection has not been illustrated in the FIGURE.

Experiments have indicated that the first conduit 28 should be relatively long. A length of about 7 feet (approximately 2.2 meters) has been found satisfactory, but is not considered to be strictly limiting. It is considered that this relative length is necessary in order to allow certain catalytic reactions to take place in the gases drawn from the crankcase, prior to the admission of these gases into the chamber 26.

It is contemplated to adapt this invention to make use of the EGR (exhaust gases recycling) connection in some of the more recent vehicle models.

An auxiliary device meeting the above description was connected to a number of automobiles during 1977 and during 1979. The detailed cases are given below, and are exemplary of the advantages to be attained by use of the auxiliary device provided herein.

EXAMPLE 1

Pollutant emission tests were carried out by the Vehicle Emissions Section of the Ontario Ministry of the Environment on a 1970 Ford Galaxie 500. The tests were carried out on the vehicle before and afer installation of the device constructed in accordance with the foregoing specification.

	Carbon Monoxide		Hydrocarbons	
Test	% volume	grams/mile	parts per million	grams/mile
Without device installed	1.75	41.7	226	2.9
With device installed	0.15	3.6	163	2.1

EXAMPLE 2

Driving tests were carried out on Nov. 12, 1977 on a 1966 Oldsmobile Delta 88, with and without the installation of a device meeting the above description. The test distance was 39 miles along Highway 403 and the QEW between Hamilton and Oakville. The vehicle speed was maintained at 50-55 mph. The weather temperature was −1° C. Prior to the test, the automobile had undergone hydraulic valve lifter replacement and valve work.

Test	Test distance	Gas consumed	Miles/Gal
With device installed	39.0 miles	2.15 Imp. gallons	18.1
Without device installed	39.0 miles	2.45 Imp. gallons	15.9

For this test, a minimum 13% of gas mileage savings was recorded.

EXAMPLE 3

Driving tests were carried out on Aug. 26, 1979 on a 1967 Cadillac vehicle, 340 cubic inches, with and without the installation of an auxiliary device meeting the foregoing specifications. The test distance was 93.4 miles and covered the following route in Ontario: Highway 6 from Dundas to Highway 401, to new Highway 6 bypassing Guelph, to old Highway 6 to about 5 miles beyond Fergus, and returning along the same route. The route was travelled twice, once without and once with the device. The time span for the tests was from about 2:00 p.m. to 8:00 p.m. The weather was overcast, with the temperature varying between 23° and 26° C. The speed was maintained generally at 50-60 pmh but included 70 mph for one minute on a stretch of Highway 401 and idling at a few stoplights. The car underwent no prior tuneup or carburettor adjustments.

Test	Test distance	Gas consumed	Cost of gas	Miles per liter
without device installed	93.4 miles	25.2 liters	$5.54	3.71
with device installed	93.4 miles	19.4 liters	$4.26	4.81

For this test, the savings in gas consumed and in cost was 23%.

EXAMPLE 4

On Sept. 2, 1979, a 1968 Buick Riviera (430 cubic inches) was tested with and without the installation of a device meeting the foregoing specification. The test distance as measured by the vehicle odometer was 92.4 miles along the following route in Ontario: Highway 6 from Dundas to Highway 401, to new Highway 6 bypassing Guelph, to old Highway 6 to about 5 miles beyond Fergus, and returning along the same route. The route was travelled twice, once with and once without the device. The tests were done from 10 a.m. to 4 p.m. The weather was generally overcast with a few light showers and the temperature was 22°-26° C. The speed was maintained generally at 50-60 mph but included stretches at 40-50 mph due to slow traffic and also idling at a few stoplights. This vehicle had had a major tune-up on Aug. 28, 1979, prior to the two tests.

Test	Test Distance	Gas Consumed	Cost of gas	Miles per liter
With device installed	92.4 miles	20.9 liters	$4.79	4.42 (19.9 miles/gal)
Without device installed	92.4 miles	28.0 liters	$6.42	3.30 (14.9 miles/gal)

For this test, the savings in gas consumed and in cost was 25.4%.

EXAMPLE 5

Driving tests were carried out on Sept. 2, 1979 on a 1975 Chrysler Plymouth Fury vehicle (318 cubic inches), with and without the installation of a device meeting the above specifications. The test distance as measured by the vehicle odometer was 86.6 miles along the following route in Ontario: Highway 6 from Dundas to Highway 401, to new Highway 6 bypassing Guelph, to old Highway 6 to about 5 miles beyond Fergus, and return along the same route. The route was travelled twice, once with and once without the device. The tests were done from 10 a.m. to 4 p.m. The weather was generally overcast with a few light showers and the temperature about 22°-25° C. The speed was maintained generally at 50–60 mph but included stretches at 40–50 mph due to slow traffic and also idling at a few stoplights. There was no prior tune-up or carburettor adjustment. The standard auto emission unit was not altered in any way during the installation of the device for the first of the two tests below.

Test	Test Distance	Gas Consumed	Cost of gas	Miles per liter
With device installed	86.6 miles	9.55 liters	$2.18	9.07 (40.8 miles/gal)
Without device installed	86.6 miles	19.5 liters	$4.46	4.44 (20.0 miles/gal)

For this test, the savings in gas consumed and in cost was 51%.

I claim:

1. An improved internal combustion engine including a crankcase ventilation system, an air filter and an intake manifold, wherein the improvement comprises in combination:

means defining a gas-mixing chamber,

a first conduit having one end adapted for connection to the crankcase of the engine and passing in non-communicating fashion through said chamber so that any gases in said chamber contact the outside of the first conduit, the first conduit opening at its other end into said chamber and being such that at least its inner wall is of copper,

a second conduit leading from said chamber and being adapted for communication with said intake manifold,

a third conduit leading from said mixing chamber and receiving a gas which has been heated by exhaust heat,

and a fourth conduit leading from said mixing chamber and being adapted for connection to the air filter of the engine.

2. The invention claimed in claim 1, in which the engine has an automatic choke, and in which said third conduit connects through a T-connection with a pipe that extends from the automatic choke, passes through the exhaust manifold, and opens to the atmosphere.

3. The invention claimed in claim 1, in which said third conduit connects directly to the exhaust pipe and allows hot exhaust gases to be drawn into said chamber.

4. The invention claimed in claim 1, claim 2 or claim 3, in which a control valve is provided in said fourth conduit.

5. The invention claimed in claim 1, claim 2 or claim 3, in which the first conduit is substantially 2.2. meters in total length.

6. The invention claimed in claim 1, claim 2 or claim 3, in which the second, third and fourth conduits are of rubber.

7. The invention claimed in claim 1, claim 2 or claim 3, in which the first conduit is of solid copper having an inside diameter of substantially 6 mm.

8. The invention claimed in claim 1, claim 2 or claim 3, in which the second, third and fourth conduits have inside diameters of substantially 8 mm, 3 mm and 5 mm respectively.

* * * * *

Consumer and Corporate Affairs Canada

Patent Office

Consommation et Corporations Canada

Bureau des brevets

Canadian Patent **Brevet canadien**

1174920

To all to whom these presents shall come:

Whereas a petition has been presented to the Commissioner of Patents praying for the grant of a patent for a new and useful invention, the title and description of which are contained in the specification of which a copy is hereunto attached and made an essential part hereof, and the requirements of the Patent Act having been complied with,

Now therefore the present patent grants to the applicant whose title thereto appears from the records of the Patent Office and as indicated in the said copy of the specification attached hereto, and to the legal representatives of said applicant for a period of seventeen years from the date of these presents the exclusive right, privilege and liberty of making, constructing, using and vending to others in Canada the invention, subject to adjudication in respect thereof before any court of competent jurisdiction.

Provided that the grant hereby made is subject to the conditions contained in the Act aforesaid.

In testimony whereof, these letters patent bear the signature of the Commissioner and the seal of the Patent Office hereunto affixed at Hull, Canada.

A tous ceux qui les présentes verront:

Considérant qu'une requête a été présentée au Commissaire des brevets, demandant la délivrance d'un brevet pour une invention nouvelle et utile, dont le titre et la description apparaissent dans le mémoire discriptif dont copie est annexée aux présentes et en fait partie essentielle, et que ladite requête satisfait aux exigences de la Loi sur les brevets,

A ces causes, le présent brevet confère au demandeur dont le titre de propriété audit brevet est établi d'après les dossiers du Bureau des brevets et est indiqué dans ladite copie du mémoire descriptif ci-annexé, et aux représentants légaux du dit demandeur, pour une période de dix-sept ans, à compter de la date des présentes, le droit, la faculté et le privilège exclusif de fabriquer, construire, exploiter et vendre à d'autres au Canada l'invention, sauf jugement en l'espèce par un tribunal de juridiction compétente.

La concession faite par les présentes étant soumise aux conditions contenues dans la loi précitée.

En foi de quoi ces lettres patentes portent la signature du Commissaire ainsi que le sceau du Bureau des brevets apposé à Hull, Canada.

SEP 25 1984

Commissioner of Patents Commissaire des brevets

Attesting Officer Certificateur

Consumer and Corporate Affairs Canada
Consommation et Corporations Canada

(11) (A) No. 1 174 920

(45) ISSUED 840925

(52) CLASS 123-37

(51) INT. CL.[3] F02D 33/00

(19) (CA) CANADIAN PATENT (12)

(54) Emission Control Device

(72) DePakh, Stephen,
Canada

(21) APPLICATION No. 376,937

(22) FILED 810506

No. OF CLAIMS. 8

Canada

1174920

IMPROVED EMISSION CONTROL DEVICE

This invention relates to devices for reducing the emission of pollutant gases from reciprocating internal combustion engines.

It is well known that one of the major sources of air pollution from an internal combustion engine, particularly in an automobile, are the emission of gases resulting from so called "blow-by" of gases between the cylinder wall and piston rings into the crankcase. Such gases have commonly been vented to atmosphere through a suitable vent pipe.

In order to solve the problem of air pollution resulting from the above source, it has been proposed to couple the vent pipe leading from an engine crankcase to the intake manifold where vacuum conditions normally exist. Thus the pollutant gases are immediately drawn back into the intake manifold of the engine and are burned in the combustion process in the cylinders.

However, due to varying vacuum conditions in the intake manifold of an automobile engine, devices of known type have not proven successful. Typically, for example, a greater amount of blow-by is liable to occur during acceleration of the engine. Simultaneously, however, vacuum in the intake manifold decreases thus reducing the capacity of the engine to draw in the crankcase emissions. Also the addition of crankcase gases to the charge fed to the engine disturbs the air/fuel mixture entering the cylinders with adverse effects.

Further, some prior art devices, in addition to leading crankcase emissions directly into the intake manifold, have provided an air intake to the crankcase so that under condition of high vacuum, air could be drawn through the crankcase to ventilate it. However, such systems are considered dangerous due to the possibility of creating an explosive mixture of gases in the crankcase.

*

According to the present invention, in order to approach a solution to the above problems of prior art devices, there is a provided, in combination: means defining a gas-mixing chamber, a first conduit having one end adapted for connection to the crankcase of an engine, the primary conduit passing in non-communicating fashion through said chamber so that gases in said chamber contact the outside of the conduit, the conduit opening at its other end into said chamber, the first conduit being such that its inner wall is of copper, a second conduit leading from said chamber and being adapted for communication with the intake manifold of the engine, a third conduit leading from said mixing chamber and receiving a gas which has been heated by exhaust heat, and a fourth conduit leading from said mixing chamber and being adapted for connection to the air filter of the engine.

The invention is illustrated schematically in the attached drawing, which shows an internal combustion engine in plan, together with the various components of the accessory provided by this invention.

In the figure, an engine 10 is seen in plan, and includes a head and a crankcase one above the other, such that they are in alignment in the view of the figure. An exhaust manifold 12 and an intake manifold 14 of the usual construction are provided, the exhaust manifold 12 emptying into an exhaust pipe 16, and the intake manifold 14 being connected by a short pipe 17 to a carburettor/choke device 18. A line 20 extends from the choke of a carburettor/choke 18, and passes into and along the exhaust manifold 12, ultimately opening at the location 22 through the wall of the exhaust manifold 12. The line 20 draws atmospheric air from the location 22 into the choke. By drawing it through the exhaust manifold 12, the atmospheric air is pre-heated.

The accessory provided by this invention is that illustrated within the broken-line rectangle in the figure.

This accessory includes, in combination, means 24 defining a gas mixing chamber 26, a first conduit 28 having one end for connection to the crankcase of the engine 10,

and second, third and fourth conduits 30, 31 and 32, respectively. The purposes of all of these conduits will become clear subsequently.

Returning to the first conduit 28, it will be seen that this passes in non-communicating fashion through the chamber 26 so that any gases in the chamber 26 can contact the outside of the conduit 28. This arrangement is made for heat-transfer purposes. The conduit 28 then has a relatively extended portion 34, the specific length of which will be dealt with later, following which it opens at its other end 36 into the chamber 26. The means defining the chamber 26 would typically be a metallic wall surrounding the chamber, and therefore the first conduit 28 opens at its other end through that wall.

The first conduit is such that its inner wall is of copper, and preferably the entire conduit 28 is of copper.

The second conduit 30 leads from the chamber 26, and in the figure is connected to the pipe 17 which is a part of the intake manifold 14.

The third conduit 31 leads from the chamber 26 and makes a T-connection into the pipe 20 at the location 39.

The fourth conduit 32 leads from the chamber 26 and is adapted for connection to the standard air filter 40 of the engine.

Preferably, there is a control valve 42 provided in the fourth conduit 32.

It has been found that the first conduit 28 should be substantially about 7 feet (2.2 meters) in total length. Naturally, some variation from this ideal length is possible, but a reasonably lengthy first conduit 28 appears to be beneficial in terms of increasing the mileage of automobiles to which this accessory device is attached.

The second conduit 30 is that through which the mixture of gases within the chamber 26 passes into the pipe 17 and thence into the intake manifold 14. This conduit may be of rubber, and typically an inside diameter of 8 mm would be satisfactory for the rubber tube constituting this conduit.

The third conduit 31 is that which is connected to the engine choke pipe 20 with a T-connection, as aforesaid.

In the solid line connection illustrated, the conduit 31 allows heated air from the pipe 20 to be drawn into the chamber 26. In certain instances of older engines, the portion 20a of the pipe 20 within the exhaust manifold 12 is rusted or cracked, and exhaust gases can be drawn into the pipe 20. This invention is also directly applicable to such a situation. It is not a disadvantage to draw exhaust gases into the chamber 26, since the exhaust gases often include certain unburned components, which can be drawn back through the engine and burned on a second pass. If the pipe 20 is not deteriorated in the portion 20a, or if the vehicle does not have such a pipe, then the alternative conduit 31a shown in broken lines may be employed. Conduit 31a is connected directly to and opens into the exhaust pipe 16 close to the exhaust manifold 12.

The third conduit 31 may be of rubber, and may conveniently be of rubber tubing with a 3 mm inside diameter. It will be understood that the third conduit 31 is essentially intended to tap a source of heat for the mixture within the chamber 26, although naturally the heat must be conveyed in a gas of some kind. The heated gas, whether air or exhaust fumes, is of course supplied by the pipe 20 or the conduit 31a.

The fourth conduit 32 is intended to draw filtered atmospheric air from the air filter 48 of the car, and the quantity of air being drawn in is intended to be adjusted by means of the valve 42.

The fourth conduit 32 may again be of a rubber tubing, conveniently having an inside diameter of about 5 mm.

A further connection may be made to the mixing chamber 26, which may be either closed or may be connected to a standard emission control device. Such a connection has not been illustrated in the figure.

Experiments have indicated that the first conduit 28 should be relatively long. A length of about 7 feet (approximately 2.2 meters) has been found satisfactory, but is not considered to be strictly limiting. It is considered that this relative length is necessary in order to allow certain catalytic reactions to take place in the gases drawn from the crankcase, prior to the admission of these gases into the chamber 26.

It is contemplated to adapt this invention to make use of the EGR (exhaust gases recycling) connection in some of the more recent vehicle models.

An auxiliary device meeting the above description was connected to a number of automobiles during 1977 and during 1979. The detailed cases are given below, and are exemplary of the advantages to be attained by use of the auxiliary device provided herein.

Example 1

Pollutant emission tests were carried out by the Vehicle Emissions Section of the Ontario Ministry of the Environment on a 1970 Ford Galaxie 500. The tests were carried out on the vehicle before and after installation of the device constructed in accordance with the foregoing specification.

Test	Carbon Monoxide		Hydrocarbons	
	% volume	grams/mile	parts per million	grams/mile
Without device installed	1.75	41.7	226	2.9
With device installed	0.15	3.6	163	2.1

Example 2

Driving tests were carried out on November 12, 1977 on a 1966 Oldsmobile Delta 88, with and without the installation of a device meeting the above description. The test distance was 39 miles along Highway 403 and the QEW between Hamilton and Oakville. The vehicle speed was maintained at 50-55 mph. The weather temperature was -1°C. Prior to the test, the automobile had undergone hydraulic valve lifter replacement and valve work.

Test	Test distance	Gas consumed	Miles/Gal
With device installed	39.0 miles	2.15 Imp. gallons	18.1
Without device installed	39.0 miles	2.45 Imp. gallons	15.9

For this test, a minimum 13% of gas mileage savings was recorded.

Example 3

Driving tests were carried out on August 26, 1979 on a 1967 Cadillac vehicle, 340 cubic inches, with and without the installation of an auxiliary device meeting the foregoing specifications. The test distance was 93.4 miles and covered the following route in Ontario: Highway 6 from Dundas to Highway

401, To New Highway 6 bypassing Guelph, to old Highway 6 to about 5 miles beyond Fergus, and returning along the same route. The route was travelled twice, once without and once with the device. The time span for the tests was from about 2:00 p.m. to 8:00 p.m. The weather was overcast, with the temperature varying between 23 and 26°C. The speed was maintained generally at 50-60 pmh but included 70 mph for one minute on a stretch of Highway 401 and idling at a few stoplights. The car underwent no prior tuneup or carburettor adjustments.

Test	Test distance	Gas consumed	Cost of gas	Miles per litre
without device installed	93.4 miles	25.2 litres	$5.54	3.71
with device installed	93.4 miles	19.4 litres	$4.26	4.81

For this test, the savings in gas consumed and in cost was 23%.

Example 4

On September 2, 1979, a 1968 Buick Riviera (430 cubic inches) was tested with and without the installation of a device meeting the foregoing specification. The test distance as measured by the vehicle odometer was ~~9.24~~ 92.4 miles along the following route in Ontario: Highway 6 from Dundas to Highway 401, to new Highway 6 bypassing Guelph, to old Highway 6 to about 5 miles beyond Fergus, and returning along the same route. The route was travelled twice, once with and once without the device. The tests were done from 10 a.m. to 4 p.m. The weather was generally overcast with a few light showers and the temperature was 22-26°C. The speed was maintained generally at 50-60 mph but included stretches at 40-50 mph due to slow traffic and also idling at a few stoplights. This vehicle had had a major tune-up on August 28, 1979, prior to the two tests.

Test	Test Distance	Gas Consumed	Cost of gas	Miles per litre
With device installed	92.4 miles	20.9 litres	$4.79	4.42 (19.9 miles/gal)
Without device installed	92.4 miles	28.0 litres	$6.42	3.30 (14.9 miles/gal)

For this test, the savings in gas consumed and in cost was 25.4%.

Example 5

Driving tests were carried out on September 2, 1979 on a 1975 Chrysler Plymouth Fury vehicle (318 cubic inches), with and without the installation of a device meeting the above specifications. The test distance as measured by the vehicle odometer was 86.6 miles along the following route in Ontario: Highway 6 from Dundas to Highway 401, to new Highway 6 bypassing Guelph, to old Highway 6 to about 5 miles beyond Fergus, and return along the same route. The route was travelled twice, once with and once without the device. The tests were done from 10 a.m. to 4 p.m. The weather was generally overcast with a few light showers and the temperature about 22-25°C. The speed was maintained generally at ~~50-50~~ 50-60 mph but included stretches at 40-50 mph due to slow traffic and also idling at a few stoplights. There was no prior tune-up or carburettor adjustment. The standard auto emission unit was not altered in any way during the installation of the device for the first of the two tests below.

Test	Test Distance	Gas Consumed	Cost of gas	Miles per litre
With device installed	86.6 miles	9.55 litres	$2.18	9.07 (40.8 miles/gal)
Without device installed	86.6 miles	19.5 litres	$4.46	4.44 (20.0 miles/gal)

For this test, the savings in gas consumed and in cost was 51%.

CLAIMS:

1. In combination:

means defining a gas-mixing chamber,

a first conduit having one end adapted for connection to the crankcase of an engine of the kind having an air filter, the ~~primary~~ first conduit passing in non-communicating fashion through said chamber so that ~~gases~~ in said chamber contact the outside of the conduit, the conduit opening at its other end into said chamber, the first conduit being such that at least its inner wall is of copper,

a second conduit leading from said chamber and being adapted for communication with the intake manifold of the engine,

a third conduit leading from said mixing chamber and receiving a gas which has been heated by exhaust heat,

and a fourth conduit leading from said mixing chamber and being adapted for connection to the air filter of the engine.

2. The combination claimed in claim 1, in which the engine has an automatic choke, and in which said third conduit connects through a T-connection with a pipe that extends from the automatic choke, passes through the exhaust manifold, and opens to the atmosphere.

3. The combination claimed in claim 1, in which said third conduit connects directly to the exhaust pipe and allows hot exhaust gases to be drawn into said chamber.

4. The combination claimed in claim 1, claim 2 or claim 3, in which a control valve is provided in said fourth conduit.

5. The combination claimed in claim 1, claim 2 or claim 3, in which the first conduit is substantially 2.2. meters in total length.

6. The combination claimed in claim 1, claim 2 or claim 3, in which the second, third and fourth conduits are of rubber.

7. The combination claimed in claim 1, claim 2 or claim 3, in which the first conduit is of solid copper having an inside diameter of substantially 6 mm.

8. The combination claimed in claim 1, claim 2 or claim 3, in which the second, third and fourth conduits have inside diameters of substantially 8 mm, 3 mm and 5 mm respectively.

1174920

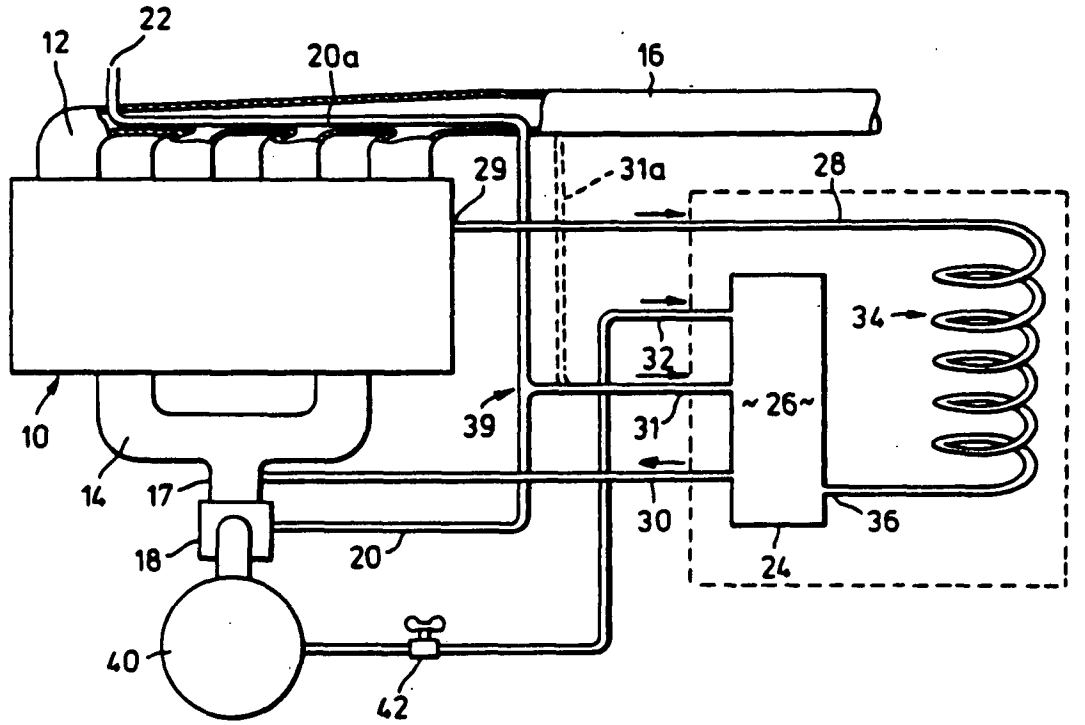

Attachment C

UNITED STATES ENVIRONMENTAL PROTECTION AGENCY

ANN ARBOR, MICHIGAN 48105

July 16, 1985

OFFICE OF
AIR AND RADIATION

Mr. S. DePakh, President
DeAcc Devices, Inc.
90 Warren Road, Suite 110
Toronto, Canada M4V2S2

Dear Mr. DePakh:

This letter is in response to your inquiry on July 16 regarding an EPA evaluation of DeAcc Device. The Environmental Protection Agency is charged by Congressional mandate to evaluate fuel economy and emission control devices. While the EPA does not actually "approve" such devices, it does conduct evaluations for the purpose of increasing the common knowledge in the area. For this reason, the outcome of any testing by EPA becomes public information. It is this information which may be cited, although no claims can be made that any EPA findings constitute "approval" of the device or system.

Enclosed with this letter is a packet of materials which you will need to apply for an EPA evaluation of your device. This packet consists of 1) an application format, 2) a document entitled "EPA Retrofit and Emission Control Device Evaluation Test Policy," 3) "Basic Test Plans and Testing Sequences," 4) a copy of the applicable Federal Regulations, and 5) other documents that may be of interest.

In order for the EPA to conduct an evaluation of your device, we must have an application. Once you have reviewed all the documents in the packet, you should prepare an application in accordance with the guidelines of the application format. A critical part of the application is the substantiating test data. The required test results will have to be obtained at an independent laboratory of your choice. Such testing would be conducted at your expense. A list of laboratories which are willing to contract for testing and are known to have the equipment and personnel to perform acceptable tests, has been included in the enclosed packet. The laboratory list is revised periodically, so be certain that the list you are using is current. Please allow EPA to comment on your test plan before beginning testing at an independent laboratory. If you desire, we can assist in the development of a satisfactory test plan. In the evaluation of devices EPA is required to work with the manufacturer of the product. Applicants such as distributors, retailers and importers of devices will be asked to obtain written authorization from the manufacturer to act as his representative.

Retrofit fuel additives are defined as devices in the regulations and will be evaluated by the same procedures as devices. Engine oils, oil additives, and other lubricants do not fall under the provisions of Section 511 of the Motor Vehicle Information and Cost Savings Act. If you wish to improve the credibility of claims for your lubricants by performing tests on your own, we will try to help by commenting on your test plans, but we cannot accept applications for formal evaluations of lubricant products.

Before you begin to evaluate your device, there are several aspects concerning testing at an independent laboratory which I would like to bring to your attention:

Minimum Test Requirements - Although different types of devices may require a more complex test plan, the minimum we require involves two vehicles and with replicate test sequences on each vehicle. The vehicles should be selected to be representative of the largest selling engine-transmission combinations in the United States. Each vehicle is to be set to manufacturer's tune-up specifications for the baseline tests. Baseline emissions and fuel economy should be near the levels at which the vehicles were certified.

The test sequences are conducted in a "back-to-back" manner; duplicate with the vehicle in baseline condition, and then duplicate with the device installed with no vehicle adjustments between tests. If installation of the device also involves some adjustments, e.g., timing, fuel-air mixture, choke or idle speed, another test sequence with only these adjustments should be inserted between the first and last. If mileage accumulation is necessary in order to realize the full benefit, the same number of miles that were accumulated before the tests with the device must also be accumulated before baseline tests without the device. In addition, the method of mileage accumulation should be kept constant. Also, as a minimum, the test sequence shall consist of a hot-start LA-4 portion (bags 1 and 2) of the Federal Test Procedure (FTP) and a Highway Fuel Economy Test (HFET). The details of these tests are contained in the enclosed packet. Although only a hot-start FTP is required to minimize the costs to you, you are encouraged to have the entire cold-start test performed, since any confirmatory testing and evaluation performed by EPA will be based on the complete FTP, and you may wish to know how a vehicle with your device performs over this official test. As a final requirement, the personnel of the independent laboratory you select should perform every element of your test plan. This includes preparation of the test vehicle, adjustment of parameters, and installation of the device.

Submission of Data - We require that all test data obtained from the independent laboratories in support of your application be submitted to us. This includes any results you have which were declared void or invalid by the laboratory. We also ask that you notify us of the

laboratory you have chosen, when testing is scheduled to begin, what tests you have decided to conduct, allow us to maintain contact with the laboratory during the course of the testing, and allow the test laboratory to answer any questions directly at any time about the test program.

Cost of the Testing - The cost of the minimum test plan (two vehicles, two test sequences in duplicate) described above should be less than $3500 per vehicle and less than $7000 for the total test at any of the laboratories on the list. It should be recognized that additions to the minimum test plan (such as providing test vehicles, mileage accumulation, parameter adjustment, or additional testing) will result in additional costs. In any case, you will have to contact them individually to obtain their latest prices.

Outcome of the Tests - In order for EPA to best utilize our facilities, confirmatory testing will be performed only on those devices that demonstrate a statistically significant improvement in fuel economy or emissions based on data from an EPA-recognized independent laboratory. We have established some guidelines which will help you determine whether the test results with your device should be considered encouraging. These values have been chosen to assure both of us that a real difference in fuel economy exists, and that we are not seeing only the variability in the results. The table below presents the minimum number of cars that need to be tested for varying degrees of fuel economy improvement, assuming a typical amount of variability in fuel economy measurement. For a minimum test plan which was conducted on a fleet of two cars, the average improvement should be at least 6 percent. If at least a 6 percent difference in average fuel economy can be shown, then we would be able to say statistically at the 80 percent confidence level that there is a real improvement.

Similarly, we would expect a minimum of 3 percent improvement for a fleet of five vehicles. Test results which display a significant increase in emission levels should be reason for concern.

Minimum Fuel Economy Improvements versus Size of Test Fleet

Fleet Size	Average Improvement Required
2	6%
3	5%
4	4%
5	3%
10	2%

Once we receive your application, it will be reviewed to determine if it meets the requirements listed in the format. The submission of data or information labeled as confidential or proprietary must be justified on a case-by-case basis by the applicant. EPA will not treat test results, including those conducted by independent or other laboratories,

as confidential since Section 511(c) of the Motor Vehicle Information and Cost Savings Act requires disclosure of such information. Additionally, EPA may decide not to perform an evaluation of a device if it judges it cannot develop a technically sound final report because the preliminary information submitted by the manufacturer was claimed to be confidential. If your application is not complete, we will ask you to submit further information or data. After any missing information has been submitted, your application will be reconsidered, and once it meets our requirements, you will be advised of our decision whether or not EPA will perform any confirmatory testing. You must provide funds to cover the cost of any testing in the EPA laboratory. You will be given the opportunity to review our test plan. Once this testing is complete, an evaluation report will be written. If no further testing is required, the report will be written solely on the basis of the test data submitted and our engineering analysis.

EPA intends to process your application in as expeditious a manner as possible. We have established a goal of twelve weeks from the receipt of a complete application to the announcement of our report. The attainment of this objective requires very precise scheduling, and we are depending on the applicant to respond promptly to any questions, or to submit any requested data. Failure to respond in a timely manner will unduly delay the process. In the extreme case, we may consider lack of response as a withdrawal of the application.

I hope the information above and that contained in the enclosed documents will aid you in the preparation of an acceptable application for an EPA evaluation of your device. I will be your contact with EPA during this process and any subsequent EPA evaluation. My address is EPA, Motor Vehicle Emission Laboratory, 2565 Plymouth Road, Ann Arbor, Michigan, 48105. The telephone number is (313) 668-4299. Please contact me if you have any questions or require any further information.

Sincerely,

Merrill W. Korth
Device Evaluation Coordinator
Test and Evaluation Branch

Enclosures

Attachment D

CORPORATE ATTORNEY:

PATENT AGENT:
SIM & McBURNEY

CONSULTANT:
PROFESSOR A. CORSINI, ASSISTANT DEAN
OF SCIENCE (STUDIES), McMASTER UNIV.

PRESIDENT:
STEPHEN DE PAKH

DeAcc Devices Inc.

DECELERATION ACCELERATION
CONTROL SAVE GASOLINE

TELEPHONE (416) 923-1248
TORONTO, ONTARIO, CANADA

August 12, 1985.

Mr. Merrill W. Korth,
Device Evaluation Co-Ordinator,
U.S. Environmental Protection Agency,
2565 Plymouth Road,
Ann Arbor, Michigan 48105,
U.S.A.

Dear Mr. Korth:

RE: PLANNED E.P.A. TESTING OF DEACC DEVICE

Thank you for your prompt response to my inquiry of July 16/85 and my request for updated information regarding E.P.A. test procedures.

As indicated to you, Patent protection on my device has now been finalized and I am in a position to re-submit my E.P.A. Test application as per your recommendation of November 15/82. (See Copy letter encl.)

Prior to re-submitting my application and based on the general material you have recently supplied, the following questions require clarification/confirmation:

1. Could you supply the following (preferably high mileage) U.S. vehicles for E.P.A. testing with the DEACC DEVICE:

Test "A" (8 Cyl. Cars/Min. Test Plan)			Projected Test Costs
1 - 1982 Chevrolet	)E.P.A.	supplied cars	U.S.$ .....
	)	or	
1 - 1984 Ford	)DEACC	supplied cars	U.S.$ .....

TEST "B" (4 Cyl. Cars/Min. Test Plan)			
1 - 1982 (German Make)	)E.P.A.	supplied cars	U.S.$ .....
	)	or	
1 - 1984 (Japan Make)	)DEACC	supplied cars	U.S.$ .....

(Continued .....)

2. Or does each test require identical make/year cars?

3. With reference to E.P.A. LISTING OF F.E. DEVICES tested: Approximately how many of these devices, dealing with recycling of blow by/crankcase gases had Patent protection prior to E.P.A. testing?

Your early reply will be most appreciated.

Sincerely,

DEACC DEVICES INC.

S. DePakh

Stephen DePakh,
President,
90 Warren Road,
Suite 110,
Toronto, Ontario,
M4V 2S2.

SD/grh

Encl. - Copy of your letter of Nov.1 15/82
- Ethyl Corp. test documents

Attachment E

UNITED STATES ENVIRONMENTAL PROTECTION AGENCY

ANN ARBOR, MICHIGAN 48105

August 19, 1985

OFFICE OF
AIR, NOISE AND RADIATION

Mr. Stephen DePakh, President
DeAcc Devices Inc.
90 Warren Road, Suite 110
Toronto, Ontario
CANADA M4V2S2

Dear Mr. DePakh:

This is in response to your letter dated August 12, 1985 discussing your plans for testing of the DeAcc Device. I will answer the questions listed in your letter and clarify the EPA policy related to the evaluation of retrofit devices.

EPA evaluates fuel economy retrofit devices under the authority of Section 511 of the Motor Vehicle Information and Cost Savings Act (MVICSA). In order to perform these evaluations at a reasonable cost to the Government, it is necessary to require that applicants provide persuasive test data substantiating their claims. We have established precise protocols to be followed by EPA and the device manufacturer, in determining the effectiveness of a device in improving fuel economy and in improving or degrading air pollution emissions. These procedures require the device to first be tested in a commercial laboratory where proficiency has been recognized by EPA. If the private laboratory data indicate a likely fuel economy improvement, EPA may choose to perform more thorough confirmatory testing at the EPA laboratory in Ann Arbor, Michigan, as part of its evaluation process.

In my letters to you on October 12, 1982 and July 16, 1985 I explained that EPA expects the device manufacturer to obtain at least a minimum amount of data from an EPA recognized commercial laboratory before it can be determined if the device warrants testing in the EPA laboratory. The minimum commercial laboratory data requirement consists of duplicate back-to-back tests on each of two vehicles representative of those widely used by drivers in the United States. The tests on the one Canadian vehicle that you performed at the Ethyl Corporation do not meet this minimum data requirement.

Question number 1 in your letter asked if EPA could supply vehicles for testing of the DeAcc Device. EPA does not supply vehicles for testing at the commercial laboratory but does supply the vehicles for testing in the EPA laboratory. The testing at the commercial laboratory usually costs between $5000 and $8000 and a rough estimate of the cost for testing in the EPA laboratory would be $10,000 to 20,000, depending on the nature of the device.

Question number 2 asked if the cars should be identical. No, they should be different to provide some indication of the device being effective on more than one model of car. The vehicles should be modern (1980 or later model) popular U.S. vehicles representative of engine families most widely used in the U.S. We usually recommend that one four cylinder and one six cylinder model be tested. I will be happy to work with you by commenting on the test plan that you arrange for testing at a private laboratory. Often the private laboratory is able to obtain the vehicles for you.

Question number 3 in your letter concerned patent protection for devices being evaluated by EPA. EPA must understand the operating principle of the device to properly evaluate it. Our reports also discuss the theory behind the operation of the device and the results of the EPA evaluation becomes public information. All of the devices that EPA has evaluated in the past were not patented, but in those cases the manufacturer usually feels sufficiently protected that he can freely discuss the principles by which the device operates.

If there are additional questions concerning these comments, please call me at (313) 668-4299.

Sincerely,

Merrill W. Korth

Merrill W. Korth
Device Evaluation Coordinator
Test and Evaluation Branch

UNITED STATES ENVIRONMENTAL PROTECTION AGENCY
ANN ARBOR, MICHIGAN 48105

April 30, 1986

OFFICE OF
AIR AND RADIATION

Mr. Stephan DePakh, President
DeAcc Devices Incorporated
90 Warren Road, Suite 110
Toronto, CANADA M4V 2S2

Dear Mr. DePakh:

We received your letter of February 25 in which you requested EPA to evaluate your DeAcc Device, Incorporated, "Emission Control Device" under Section 511 of the Motor Vehicle Information and Cost Savings Act (MVICSA). We have reviewed your application and determined that, although additional information/explanation is needed in several areas, you should be readily able to supply the information and to proceed with testing at an independent laboratory.

Our comments below address these items and briefly describe the independent lab testing you will need to conduct.

1. How will the device be marketed? Direct to users? Through service and installation shops?

2. What is the cost of the device?

3. Neither the application nor the patent gives a clear or concise explanation of how the device functions. How is this device an improvement over a PCV valve?

4. Will the use of the three tubes to the induction system change the overall fuel/air ratio or alter the F/A ratio of individual cylinders?

5. Additional details are needed for the installation of the device.

a. Are all parts necessary for installation supplied with the device?

b. Will the device be installed by the purchaser/vehicle owner?

c. Does the PCV remain on the engine?

d. Detailed device installation instructions are needed.

e. The control valve to the air filter is manually adjustable. How is the proper adjustment determined?

f. Vehicle specific installation instructions are needed for the tube to be installed on the exhaust manifold or connected to a choke tube.

6. The section on device operation notes "To assure efficiency and mechanical operating efficiency, instructions will be furnished for its usage." Please provide these instructions.

7. The section on device maintenance refers to an "... emission test required to ensure that there is no lean condition in the carburetor system". What is this emission test and what are the criteria for determining lean operation?

8. What are the specific claims for the device, anticipated improvements in emissions and fuel economy?

9. Please provide detailed information on the catalytic action occurring in the seven-foot coiled copper tube that passes the crankcase vapors through the chamber and then returns to open into the chamber.

10. From the information provided, it appears that you expect full benefits to be seen immediately and that there is no need for mileage accumulation. Please notify us if this is not the case.

As outlined in the EPA correspondence with DeAcc Devices, Incorporated, during the past four years, the minimum test program for any device without mileage accumulation consists of replicate FTP (or LA-4) tests and replicate HFET tests on at least two representative vehicles, both with and without the device, at an independent lab. Thus, the minimum total is eight FTPs (LA-4) and eight HFETs.

The data you provided consists of highway driving and a few limited emission tests on Canadian vehicles. These data do not meet the minimum requirements for independent lab testing and are considered to be background information only.

Although we will need your response to the preceding to further process the evaluation of your device, it appears that you should be able to promptly conduct the screening testing at

an independent laboratory. Since it appears you expect the device to improve emissions and fuel economy, do not require mileage accumulation, require no vehicle parameter adjustments, and expect at least a six percent improvement, test plan code A using test sequence code 4 (replicate FTP and HFET tests both without and with the device on two vehicles) will meet this need. These tests will probably cost you $6-12,000. I am enclosing a copy of our recent packet of Section 511 materials which contains an updated list of recognized labs. Please let us review your detailed test plan prior to testing so that you may avoid wasted expenditure of time and money.

If the independent lab data indicate a benefit, EPA will probably conduct confirmatory testing. These tests are more extensive than the independent lab tests. Also, we are now required to recover the direct test costs from the applicant. For your device the costs would probably range from $10-15,000.

If I can be of any further assistance, please contact me at (313) 668-4299.

Sincerely,

Merrill W. Korth
Device Evaluation Coordinator
Test and Evaluation Branch

Enclosure

Attachment G

DeAcc Devices Inc.

DECELERATION ACCELERATION

CONTROL SAVE GASOLINE

TELEPHONE (416) 923-1248

TORONTO, ONTARIO, CANADA

PATENT AGENT:
SIM & McBURNEY

CONSULTANT:
PROFESSOR A. CORSINI, ASSISTANT DEAN OF SCIENCE (STUDIES), McMASTER UNIV.

PRESIDENT:
STEPHEN DE PAKH

24 May 1986

Mr. Merril W. Korth
Device Evaluation Coordinator
U.S.A. Environmental Protection Agency
2565 Plymouth Road
Ann Arbor, Michigan 48105
U.S.A.

Dear Mr. Korth:

I received your letter of May 10, 1986, in which you and your personnel reviewed my application and determined that, additional information/explanation is needed in several areas and I should readily be able to supply the information to you (E.P.A.) and to proceed with testing at an independent laboratory recognized as capable of performing E.P.A. retrofit device emission test for DeAcc Devices Inc.

It is outlined in your letter that at least two vehicle tests are necessary and should consist of the total of eight F.T.P.'s. (L.A.4) and eight H.F.E.T.'s., and therefore do not have to have mileage accumulation test, also that you need my response to further process the evaluation of the DeAcc device, and that I should promptly conduct the screening testing in a laboratory recognized by E.P.A. Further, I do appreciate your advice, I do thank you, that I should inform you with the detailed test plan, prior to testing, so that DeAcc devices Inc. may avoid wasted expenditure of time and money.

I wish to inform you that the closest from Toronto, Ontario, to an independent laboratory is namely: ATOMATES CUSTOM SYSTEMS INC., 645 IUNTAVE ELK GROVE VILLAGE, IL. As they are recognized by E.P.A. and their equipment is identical or equivalent to that used by E.P.A.

I do my best Mr. Korth to answer your comments, that additional information/explanation is needed in several areas, my answers are below:

1. First - how will the device marketed through service and installation shops, etc.?

   The first answer is that the device will be marketed through service and installation shops, and hopefully, that through the Canadian Automobile Association in the U.S.A. and in Canada will be marketed.

2. What is the cost of the device?

The answer is prefix, and below the following represents a short form cost projection for production of the DeAcc device.

Initial production of the economy model will utilize manual assemble of standard parts, presently available from several industries at wholesale costs, as set out below, herein.

Future mass production with customized components, assemble techniques and higher ratio of number of employees versus basic overhead/equipment cost should reduce the production cost by up to 40% in Canada and in U.S.A. approximately up to 70%.

A. PRODUCTION COST

Parts

Qty	Parts Description	Unit Cost	Total
7	3/8 O.D. Copper tubing	$0.30	$2.10
7	3/8 I.D. P.C.V. hose	$0.60	$4.20
6	Hose clamps	$0.17	$1.02
1	3/8 O.D. (male) air valve	$3.60	$3.60
1	3/8 O.D. (male) air filter	$0.70	$0.70
1	F/W clamp W. screws	$0.46	$0.46
		Parts Total	$12.08

Optional

1	Plastic Casting for Device	$3.50	

Packaging and Printing

1	Blister pkg/instructions	$0.55	$0.55
1/10	Shipping carton/labels/tapes	$0.80	$0.08

Equipment (Combined cost per hour)

1/2 hr	rental or purchase amort.	$3.00/hr	$1.50

Labour (including social contributions)

1/2 hr	coil tubing, solder fittings attach hoses and filter test package.	$18.00/hr	$9.00

Overhead (combined cost per hour)

1/2 hr	Office/plant facilities services and supplies legal taxes, insurance	$15.00/hr	$7.50

Unit Cost/Retail $78.06 ($78.00)

3. Neither the application nor the patent gives a clear of concise explanation of how ... etc. This device an improvement ... etc?

The device function is simple. The device has four conduits, connected to the device gas-mixing chamber.

The <u>first</u> conduit connected to the P.C.V. Valve with a seven, foot copper tubing to control direct flooding in the intake manifold, and the other end of it connected to the device gas chamber.

The <u>second</u> conduit leads from the device gas-chamber to the intake manifold, where the varying vacuum condition draws the unused gases, the so called "hot blow by gases" through the seven foot copper conduit, from the P.C.V. valve to the device gas-mixing chamber.

The third conduit leads from the device gas-chamber to the exhaust pipe manifold, and through the vacuum conditions the NOx - H.C. - C.O. - gases drawn into the device gas-chamber.

The fourth conduit leads from the device gas-chamber to the air filter of the engine, and through the vacuum conditions oxygen-air drawn in to the device gas-chamber.

In conclusion of the device functions and the improvement over the standard P.C.V. valve is the following explanation: The device recycle the unburd gases through the device gas-chamber, where mixed with oxygen to be lead into the intake (vacuumed) manifold to reburn.

The catalytic actions reactions are plausible, it has not been verified; I do consider it worthwhile to have a test with and without the 7 foot copper conduit. But it is thought that when copper oxide is present in the 7 foot copper conduit mixed with oxygen some conversion of nitrogen oxide to nitrogen will occur. The driving force of this reaction resides in the high thermodynamic stability of nitrogen gas.

The presence of oxygen in the device gas-mixing chamber may also cause some conversion of the copper to copper oxide. In turn, the copper oxide may be reduced, at least in part to copper by the action of hydrocarbons (H.C.) and carbon monoxide (C.O.).

This two reaction would tend to regenerate the copper while also reducing the content ratio of C.O. and H.C.

4. Will the use of the three (four) tubes to the induction system change ... etc?

   The overall fuel/air ratio is altered through the device. The reason is that the so called "blow by gases" add to the fuel/air intake and alter for the best, the F/A ratio in the combustion process in the individual cylinders.

5. Additional details are needed ... etc?

   (a) First an emission control test (SCOPE) to balance the carburator F/A mixture to the U.S.A. or Canadian Government requirements in idle condition of the engine.

   (b) Find a place in the engine compartment 5" by 6" in length, 2" thick where it is safe and secured with a clipper.

   (c) Connect the first conduit to the P.C.V. valve, with a hose clamp.

   Connect the second conduit to the intake manifold, with a hose clamp.

Connect the third conduit to the exhaust manifold pipe after an outlet welded out into it, by 3/8", then has to weld into the exhaust pipe, a 8" - 10" heat resistant steel tube, that the third conduit which is made of rubber won't burn. (The rubber hose other side is connected to the device gas-chamber). If the engine prior 1964 has an old choke tube so use a T shaped connector (naturally have to cut the choke rubber tube to do this) and connect the hose from the device gas-chamber with the T shape connector. The steel tube welded into the exhaust system for hot-heat into the choke, but after a short time the "heat resistant" 7" or 8" length tube, which is connecting a rubber hose directly into the choke; collapses, and errosion takes place through the constant high heat from the exhaust system. Therefore emission gases of C.O.-H.C.-N.O.x in presence in the choke, but with the T shape connector, the emission gases vacuumed into the device gas chamber and reburn in the process of combustion before entering into the old choke system.

(d) The fourth conduit is connected to the engine air filter where a hole of 3/8" should be made to lead the rubber conduit from the device air intake valve into the engine air filter 1/2" inwardly, and a larger clipper needed then the hole, so it should hold inwardly the rubber hose and it can not slip out from the air filter. The other end of the fourt conduit is connected to the device manually adjustable air intake valve and through it the air enters to the device gas chamber.

(e) As the emission standards is set by the U.S.A. - Canadian Governments and the requirements in idle engine condition for example 0.40% C.O. or 1.00% C.O. or 3.00% C.O. as it would register on a "SCOPE" emission test device, then the manually adjustable air intake valve has to be open as far or further till the "SCOPE" emission test device shows 0.00% C.O. in idle-deceleration.

5. (a) Are all parts necessary for installation supplied with the device?

Yes, all parts necessary will be supplied by DeAcc Devices Inc.

(b) Will the device be installed by the purchaser/vehicle owner?

The installation will be, has to be by a specialized professional.

(c) Does the P.C.V. remain on the engine?

Yes, the P.C.V. remain on the engine. To replace it the cost of the device would be higher, but not for the auto leading manufacturers.

(d) Detailed device installation instructions are needed.

The answer is explained from the beginning of question no. 5 through a,b,c,d,e.

(e) The control valve to the air filter is adjustable, how is proper ... etc?

The answer is explained through No. 5 (e).

(f) Vehicle specific installation instructions are needed for the tube ... etc.

The answer is explained through No. 5 (c) "connect the <u>third conduit</u>."

6. The section on device operation notes "to assure efficiency and mechanical operating efficiency"... etc.

The answer is explained through No. 5 a,b,c,d,e, - these instructions will be furnished with the device.

7. The section on device maintenance refers to an ... etc.

The emission test with a "SCOPE" emission test device would show what are the criteria for determining the lean condition in the carburator system of an engine.

The emission standards is set by the governments and the requirements have to be set through the carburator in idle engine condition to not have lean operation.

8. What are the specific claims for the device, anticipated ... etc.

The improvements are in emission and fuel economy by recycling the so called "blow by gases" and use it as an added fuel with the engine system and reburn it in the combustion process in the individual cylinders, with the emission gases: C.O.-H.C.-N.O.x.

9. Please provide detailed information on the catalytic action ... etc.

The role of the copper tubing (in the patent No. 34) is considered to be as follows. As hot gases are drawn through No. 34 from the crankcase, it is thought that the concentration of N.O.x. gas (primarily mono-nitrogen oxide) in the crankcase gas will be reduced by the reaction:

9. Simutaneously, the presence of oxygen may also cause some conversion of the copper oxide. In turn the copper oxide may be reduced back in part to copper by the action of hydrocarbons (H.C.) and carbon monoxide (C.O.).

C.U.O. + C.O. C.U. + C.O.$_2$
C.U.O. + H.C. C.U. + C.O.$_2$: + H_2O.

This two reaction would tend to regenerate the copper while also reducing carbon monoxide (C.O.).

Because the copper is regenerated the term "catabytic" has been used. Strictly speaking, however, the copper is not really a catabylic agent because it is produced and regenerated in two separate reaction.

N.O. + C.U. C.U.O. + 1/2 N_2

That is to say, some conversion of nitrogen oxide to nitrogen will occur, with the simultaneous formation of copper oxide. The driving force for this reaction resides in the high thermodynamic stability of nitrogen gas. (Question No. 3 explained it).

10. From the information provided, it appears that you expect full benefits ... etc.

Yes, I would like to have full benefits immediately and as you say that there is no need for mileage accumulation.

Thank you, Mr. Korth, for your letter.

Sincerely yours,

S. De Pakh
President
90 Warren Road
Suite 110
Toronto, Ontario
Canada, M4V 2S2

Phone, (416) 923-1248

AUTOMATED CUSTOM SYSTEMS INC.

1238 West Grove Ave., Orange, CA 92665-4134 (714) 974-5560

June 11, 1986

Mr. Stephan DePakh
DeAcc Devices, Inc.
90 Warren Rd.
Suite 110
Toronto, Canada M4V252

REF: EPA 511 Test Program

Dear Mr. Depakh,

Confirming our telephone conversation of June 11, 1986, enclosed is our current price schedule reflecting the cost envolved to perform a 511 Test Program. For your further reference, I have also attached an example copy of a completed 511 program, (Highway Fuel Economy Only), computer print out.

Automated Custom Systems presently has in their possession the following vehicles with over 50,000 miles which may be used for your program:

YEAR	TYPE	MILES
1982	Olds Custom Wagon	60,153
1981	Lincoln Mark IV	79,281
1979	Olds Cutlass	86,000

The above vehicles may be utilized at a cost of $100.00 each for your program.

You indicated that milage accumulation would not be required for your device. Therefore, the program for two vehicles could be completed in two working days. This test program could be scheduled immediately with one (1) week advance notice.

We again thank you for your interest in our company and capabilities and look forward to performing your test requirements in the future.

Sincerely,

Loren T. Mathews

Loren T. Mathews
Vice President/Gen.Mgr.

LTM/jms

Ann Arbor
☐ 462 Jackson Plaza,
Ann Arbor, MI 48103
(313) 996-4040

Chicago
☒ 645 Lunt Ave.
Elk Grove Village, IL 60007
(312) 952-1790

Denver
☐ 1859 Jasper St.
Aurora, CO 80011
(303) 344-5470

Ft. Lauderdale
☐ 1000 West Newport Center Drive
Deerfield Beach, Florida 33442
(305) 481-2663

Arthur L. Smith, B.A. | Barrister & Solicitor
Suite 1606, 141 Adelaide St. West, Toronto, Ontario M5H 1V7 | (416) 864-9677

July 24, 1986

Mr. Merril W. Korth
Device Evaluation Coordinator
U.S.A. Environmental Protection
Agency
2565 Plymouth Road
Ann Arbor, Michigan
48105, U.S.A.

Dear Sir:

Re: DeAcc Devices Inc.
- E.P.A. 511 Test Programme

I have been asked to write to you by my client, DeAcc Devices Inc., to confirm that Mr. Stephen DePakh will attend at the office of Automated Custom Systems Inc. on Monday, August 4, 1986. My client has requested that a copy of the test results be forwarded to you by Automated Custom Systems Inc.

My client further instructs me to thank you for your co-operation and the assistance that you have rendered to him in arranging for the test programme.

Yours very truly,

Arthur L. Smith

ALS:br.

Attachment J

UNITED STATES ENVIRONMENTAL PROTECTION AGENCY

ANN ARBOR, MICHIGAN 48105

OFFICE OF
AIR AND RADIATION

July 9, 1986

Mr. Stephen DePakh, President
DeAcc Devices Incorporated
90 Warren Road, Suite 110
Toronto, Canada M4V 252

Dear Mr. DePakh:

We received your letter of May 24, in which you responded to our request for clarification and added information about your "Emission Control Device." It appears you have addressed all our questions and are ready to proceed with the independent laboratory testing.

The test plan we previously suggested (Test Plan Code A using test sequence code 4, with replicate FTP and HFET tests both with and without the device on each of two vehicles) still appears to be the minimum test plan required. FTPs rather than LA-4s are needed for your device, since the fuel economy benefits are to achieved principally through an emission improvement.

Please note this is eight FTPs (3 bag test) and eight HFETs, not eight LA-4s (2 bag test) with eight HFETs as suggested in your letter. Again, please let us review your detailed test plan prior to testing. Also, we would appreciate knowing your test schedule (dates) prior to testing.

If I can be of any further assistance, please contact me at (313) 668-4299.

Sincerely,

Merrill W. Korth

Merrill W. Korth
Device Evaluation Coordinator
Test and Evaluation Branch

Attachment K

DeAcc Devices Inc.

DECELERATION ACCELERATION

CONTROL SAVE GASOLINE

TELEPHONE (416) 923-1248

TORONTO, ONTARIO, CANADA

PATENT AGENT:
SIM & McBURNEY

CONSULTANT:
PROFESSOR A. CORSINI, ASSISTANT DEAN OF SCIENCE (STUDIES), McMASTER UNIV.

PRESIDENT:
STEPHEN DE PAKH

August 8, 1986

Mr. Loren T. Mathews
Vice-President and General Manager
Automated Custom Systems Inc.
645 Lunt Avenue
Elk Grove Village
Chicago, Illinois 60007
U.S.A.

Dear Mr. Mathews:

Further to our meetings in your office in Elk Grove Village on August 4th last, I wish to confirm what was resolved during our discussion, as follows:

(a) You had not been advised of the required test procedure by Mr. Korth of the Environmental Protection Agency, due to your trip to Korea from which you returned on August 3rd last;

(b) The E.P.A. requirements are that you conduct eight F.T.P.'s and eight H.F.E.T.'s (3 bag test);

(c) Your 1982 oldsmobile station wagon (60,153 miles) and your 1981 Lincoln Mark IV (79,281 miles) are to be tuned by your master mechanic and soaked immediately without being driven;

(d) The carburetion systems of the two cars are to be set to the manufacturer's specifications;

(e) It is extremely important that the carburetion systems should not be "leaned", (i.e. not sufficient oxygen or not sufficient fuel);

..... 2

(f) The carburetion systems should be rich in order to create the utmost power efficiency of the engines;

(g) The cost of the above testing procedures will be $8,450.00 as confirmed in discussions with yourself, Mr. Furton and Mr. Korth, and I shall have with me a certified cheque in payment of this amount.

(h) The tests on the engines are to be conducted on August 11th and 12th without the device and the data is to be available on August 13th at 10:00 a.m. when I arrive at your office.

(i) I shall bring two devices with me so that the hot and cold comparison tests can be done commencing August 13th.

(j) The devices will be put on the engines by your master mechanic which procedure should take approximately one minute per engine.

I wish to thank you for your co-operation and look forward to meeting with you on August 13th next.

Sincerely,

S. DePakh

Stephen DePakh

SDeP:br.

Attachment L

CORPORATE ATTORNEY:
R. M. LIEBERMAN

PATENT AGENT:
SIM & McBURNEY

CONSULTANT:
PROFESSOR A. CORSINI, ASSISTANT DEAN
OF SCIENCE (STUDIES), McMASTER UNIV.

PRESIDENT:
STEPHEN DE PAKH

DeAcc Devices Inc.

DECELERATION ACCELERATION
CONTROL SAVE GASOLINE

TELEPHONE (416) 923-1248
TORONTO, ONTARIO, CANADA

August 8, 1986

Mr. Merril W. Korth
Device Evaluation Co-ordinator
U.S.A. Environmental Protection
Agency
2565 Plymouth Road
Ann Arbor, Michigan 48105
U.S.A.

Dear Mr. Korth:

I am pleased to advise that the test plan you suggested will be performed by Automated Custom Systems Inc. on August 11th to 14th next at their laboratory in Elk Grove Village, Illinois. Please note that eight F.T.P.'s (3 bag test) and eight H.F.E.T.'s will be performed as suggested in your letter of July 9, 1986.

I enclose a copy of my letter of August 8, 1986, to Mr. Mathews confirming the testing procedure. The test results will be forwarded by Mr. Mathews upon completion of the tests.

I wish to thank you for the interest you have shown in my invention.

Yours sincerely,

S DePakh

Stephen DePakh

SDeP:br.

Encl.

AUTOMATED CUSTOM SYSTEMS INC.

1238 West Grove Ave., Orange, CA 92665-4134 (714) 974-5560

September 3, 1986

DeAcc Devices Inc.
90 Warren Road
Suite 110
Toronto, M4V 2S2, Ontario,
Canada

Reference: EPA 511 Test Program

Gentlemen,

Confirming our telephone conversation, attached are the original copies of all the associated test reports covering the above referenced EPA 511 run on 2 ACS provided vehicles. The attached summary sheets detail the test results.

Several points regarding this test program are clarified and detailed below:

1. The 1984 Chevrolet Camaro received 2 HFET preps throughout the program prior to the data acquisition at the end of the third cycle.

2. Both vehicles were baseline tested on 8/12/86 and 8/13/86 after an LA-4 prep on 8/11/86. One day, 8/14/86, was lost during the program because Mr. DePakh failed to arrive as scheduled with the 2 devices. Mr. DePakh finally arrived the morning of 8/14/84 with the devices which were installed as further described below. LA-4 prep cycles were performed on both vehicles and removed for 24 hour soak. NOTE: It should be noted that the 2 devices were NOT IDENTICAL in mechanical configuration. Furthermore, ACS was not provided with a detailed instruction/installation set-up manual. Mr. DePakh indicated that EPA Ann Arbor had reviewed the manual and he would instruct our personnel during the installation.

3. INSTALLATION
   A. ITEM (j) of Mr. DePakh's 8/8/86 letter indicated that the device would be installed in the respective vehicles in 'approximately one minute per engine.' For your reference, the following describes in detail the installation procedure as supervised by Mr. DePakh:
   B. Completely remove air filter assembly.
   C. Remove existing PCV line from intake manifold.
   D. Install one line from the device on PCV fitting (Item C)
   E. Original PCV line connects to second line on the device.

Ann Arbor
☐ 462 Jackson Plaza,
Ann Arbor, MI 48103
(313) 996-4040

Chicago
☑ 645 Lunt Ave.
Elk Grove Village, IL 60007
(312) 952-1780

Denver
☐ 1859 Jasper St.
Aurora, CO 80011
(303) 344-5479

Ft. Lauderdale
☐ 1000 West Newport Center Drive
Deerfield Beach, Florida 33442
(305) 481-7663

F. The third line from the device was to be installed in the exhaust manifold!! To accomplish this, Mr. DePakh advised us to drill a hole in the exhaust manifold and install a threaded fitting with a 3 inch 1/4 inch tube to act as a heat sink rubber tubing. Obviously, ACS refused to alter the provided test vehicles in this manner. As mutually agreed, the third line was tapped into a 20 foot rubber hose and terminated at a 1/4 inch fitting installed in the standard silicon exhaust boot.
G. The fourth line (intake air) was placed randomly within the engine compartment.
H. Both devices contained a brass needle valve which during idle was adjusted and set 'by ear' by Mr. DePakh. An LA-4 prep was performed and the vehicles removed to the soak area.

It should be quite obvious to the most casual observer that the installation procedure took considerably longer than 'one minute' as originally indicated!!

INITIAL PREPARATION OF ACS TEST VEHICLES
The ACS provided test vehicles were set-up and prepared for the test program along the guidelines established by the U.S.E.P.A. This procedure was set-up over 4 years ago and all 5 locations of Automated Custom Systems, Inc. have been recognized by the U.S. Environmental Protection Agency as having the facilities, equipment and personnel necessary to conduct exhaust emission tests on light duty motor vehicles in accordance with the current Federal Test Procedure. Mr. DePakh made several derogatory statements regarding our set-up and vehicle qualification procedures which I therefore feel should again be restated in detail. It should be further noted that the ACS 'general vehicle procurement procedure' usually involves local rental vehicles with low milage as detailed in your original letter from E.P.A. In the case of DeAcc, we were requested to provide older vehicles with approximately 50,000 miles.
A. Check and set timing to factory specifications.
B. Check spark plugs and replace as required.
C. Check and replace filters as required.
D. Check cap, rotor and wires.
F. Oil change as required.
G. Check idle RPM.

Mr. DePakh's letter also indicated 'carburetion systems should be rich in order to create the utmost power.' As you know, the vehicles we provided for test come from the factory with sealed adjustments, thus preventing tampering. Late model vehicles, included those fuel injected, include closed loop Lamda systems which also are not adjustable.

It should be noted that the baseline emission numbers obtained on the 2 ACS provided test vehicles were found to be acceptable by EPA during a telephone conversation on 8/15/86 with Mr. Korth. Mr. Korth further advised that since no adjustments could be made to the carburetion systems that the devi ting should procede per our established procedure.

Based on the above, ACS feels that Mr. DePakh's comments about the 1982 Oldsmobile are unfounded and the vehicle is certainly representative of on the road models of this type. However, ACS will agree to run a third test program on a late model, fuel injected, low milage vehicle provided by DeAcc Devices Inc. The program proposed is as follows:

a) Parameter Check
b) LA-4 Prep
c) 12-36 Hour Soak
d) Cold FTP (3 Bag)
e) HFET Prep
f) HFET with Data
g) 12-36 Hour Soak
h) Cold FTP (3 Bag)
i) HFET Prep
j) HFET with Data
k) Parameter Check

Install device and repeat steps a-k. It is further suggested that the vehicle provided have provisions to quickly install the third device line to the exhaust manifold, such as a 1/4 inch capped Swagelok fitting. A detailed instruction manual will be provided.

COST TO DEACC DEVICES, INC. $3000.00

The program will be completed in 5 days, Monday-Friday and 1 week notice is required. Payment will be by certified check in U.S. dollars immediately prior to testing.

Sincerely,

Loren T. Mathews

Loren T. Mathews
Vice President

CORPORATE ATTORNEY:
[redacted]

PATENT AGENT:
SIM & McBURNEY

CONSULTANT:
PROFESSOR A. CORSINI, ASSISTANT DEAN
OF SCIENCE (STUDIES), McMASTER UNIV.

PRESIDENT:
STEPHEN DE PAKH

DeAcc Devices Inc.

DECELERATION [redacted] ACCELERATION

CONTROL SAVE GASOLINE

TELEPHONE (416) 923-1248
TORONTO, ONTARIO, CANADA

REGISTERED MAIL

31 October 1986

Mr. Merril W. Korth,
Device Evaluation Coordinator
U.S.A. Environmental Protection Agency
2565 Plymouth Road,
Ann Arbor, Michigan
48105 U.S.A.

Dear Mr. Korth:

Re: DeAcc Devices Inc., - E.P.A. 511 Test Programme

During our last telephone conversation, I tried to explain what occured regarding Automated Custom Systems Inc. in Chicago.

On Monday, August 4, 1986, I arrived at Chicago with a certified cheque for $6,000.00 U.S. which was the amount quoted by Loren T. Mathews to conduct the E.P.A 511 Test Programme on two different cars.

Mr. Mathews informed me in the morning that he had just returned from Korea and that he had to leave immediately for an appointment with his dentist. Mr. Roy D. Sinclair, the Manager, was left in charge and he informed me that Automated Custom Systems Inc. does not have a mechanic on their staff, which comprises three people and a secretary. At this point, I wanted to leave to return to Toronto, but Mr. Sinclair asked me to remain and showed me a piece of paper on which was written, "prepare three bag tests". He was afraid that if I left he might be blamed and he would be fired, although Mr. Mathews had not discussed the tests with him.

I waited for Mr. Mathews until 3:00 p.m. and at which time I mentioned to him that the cars were not prepared for the test (they were untuned and thick dust covered the engines) and that I could not wait for two days, and then I left. On the way back to Toronto, I stopped at Ann Arbor and met with the President of Automated Custom Systems Inc., who telephoned Mr. Mathews in Chicago and he was informed that the price for future tests had risen from $6,000.00 to

$8,450.00 U.S. The President of A.C.S.I. apologized to me and suggested that I make another appointment, which was made for August 14th. I am enclosing a copy of a letter dated August 8, 1986 which I sent to Mr. Mathews setting out my understanding of what had been resolved at our earlier meeting, as well as what my specific requirements would be on my return to Chicago on August 14th.

I requested proof that the engines were not leaned down but running rich, and it was not available. I obtained information from a mechanic next door to A.C.S.I. that he had done a minor tune up, that the engines were running lean and that the carburetion system should be opened up in order to create power efficiency in the engines.

After I had a lengthy discussion with Mr. Mathews, he wanted to refund me the sum of $3,500.00 U.S. which I refused to accept. At that time, I telephoned you and informed you of the discussion I had with him, and he assured you that the cars were tuned up rich and I decided to proceed with the tests. After the tests were conducted, he informed me: "I have to show the test results to an expert for him to figure it out". I did not receive his letter in which he enclosed the results until a month after the tests.

Mr. Mathews indicated in his letter that the two devices were not identical. He is wrong in making such a statement; one of them was packed into a stainless steel box, but both were the same mechanically. Furthermore, he stated in his letter that the installation lasted longer than 1 - 2 minutes. This is because he did not call in a mechanic whom I could instruct on the installation, which should not have taken more than 1 - 2 minutes. The Manager, Mr. Sinclair, said: "I am not a mechanic, but I have to do the installation". As a result, it took longer. Furthermore, a dealer such as General Motors, who is familiar with the carburetion system and an engine which has run over 60,000 miles, should have checked it out. I suppose Mr. Mathews did not want to incur further expenses so the mechanic whom he hired did a minor tune up.

I wish to inform you that two cars, an Oldsmobile and a Camaro, both 305 c.c. V-8 4 barrel engine, had similar percent emission gases and with the device installed the

Camaro had over a 60% average reduction of the emission gases. An Ontario dealer, General Motors, conducted a test on a 305 c.c. V-8 4 barrel engine, 6221 km. on the odometer, a 1985 Buick, and the fuel economy improved 21.9%, idle: No C.O. (see copy attached).

I also wish to inform you that a third 5-day test programme can be conducted by Automated Custom Systems Inc. at the cost of $3,000.00 U.S.

With your assistance and your prestige, I feel that Mr. Mathews can be made to realize after your engine analysis that DeAcc Devices Inc. is entitled, with your approval, to one E.P.A. 511 Test Programme without cost. In the alternative, I would prefer to have the test done in the laboratories of your agency.

Mr. Korth, in Chicago, two cars were tested at the cost of $8,450.00 U.S. within 5 days. Mr. Mathews is offering a one car test (511 Programme) for $3,000.00 within 5 days. Is this generosity to DeAcc Devices Inc. <u>or an admission of his mistakes</u>?

I wish to take this opportunity to thank you for your assistance up to the present time and in the future.

Respectfully yours,

Stephen DePakh, President,
DeAcc Devices Inc.

SDP/dr
Encls.

AUTOMATED CUSTOM SYSTEMS, INC.
ELK GROVE, IL. 60007

TEST WEEK: 8/11/86

EPA 511 TEST PROGRAM
****

CUSTOMER: DEACC DEVICES, INC.
TORONTO, CANADA

TEST-TO-TEST VARIABILITY WORKSHEET

AUTO/YR: 1984 CHEVROLET
MODEL: 2 DOOR CAMARO RED
VIN: 1G1AP87H2EL105034
DRIVER: RAY SINCLAIR
OPERATOR: CHUCK SHOEMAKER
COMMENTS: BEFORE/AFTER BACK-TO-BACK

ENGINE CID: 305/8 CYLINDER
TRANSMISSION: AUTO
A/C EQUIPPED: YES
CURB WT: 3186
INERTIA WT: 3500
HP ACT/IND: 12.3/10.4

BASELINE TEST RUN	VEHICLE ODOMETER	TEST DATE:.....8/12/86, 8/13/86 COLD START FTP					HFET (AFTER HFET PREP)				
		HC	CO	CO2	NOX	F.E.	HC	CO	CO2	NOX	F.E.
1	24,737	0.294	2.586	638.7	1.126	13.777	0.176	5.713	445.1	2.050	19.51
2	24,787	0.281	2.372	632.1	1.146	13.927	0.389	8.309	442.8	2.272	19.40
MEAN		0.288	2.479	635.4	1.136	13.85	0.283	7.011	443.9	2.161	19.45
S.D.		0.009	0.151	4.649	0.014	0.106	0.151	1.836	1.653	0.157	0.073
C.V.		3.2	6.1	0.7	1.2	0.8	53.3	26.2	0.4	7.3	0.4
		****	****	******	****	****	****	****	****	****	****

FINAL TEST RUN	VEHICLE ODOMETER	TEST DATE:.....8/15/86, 8/16/86 COLD START FTP					HFET (AFTER HFET PREP)				
		HC	CO	CO2	NOX	F.E.	HC	CO	CO2	NOX	F.E.
1	24,837	0.301	2.696	636.5	0.747	13.819	0.107	3.399	440.7	0.655	19.87
2	24,919	0.552	2.702	642.5	0.796	13.676	0.101	3.956	438.2	0.675	19.94
MEAN		0.427	2.699	639.5	0.772	13.75	0.104	3.678	439.4	0.665	19.91
S.D.		0.177	0.004	4.197	0.035	0.101	0.004	0.394	1.785	0.014	0.052
C.V.		41.6	0.2	0.7	4.5	0.7	4.1	10.7	0.4	2.1	0.3
		****	****	******	****	****	****	****	****	****	****
PERCENT CHANGE		48.35	8.87	0.6	-32.09	-0.75	-63.19	-47.55	-1.02	-69.23	2.32
==========		======	======	======	======	======	======	======	======	======	======

NOTE 1: Exhaust emissions are in grams per mile, fuel economy is in miles per gallon.
NOTE 2: C.V. is the Coefficient of Variation for the tests.

NOTE 3: $C.V. = \frac{\text{STANDARD DEVIATION}}{\text{MEAN}} \times 100\%$

AUTOMATED CUSTOM SYSTEMS, INC.
ELK GROVE, IL. 60007

TEST WEEK: 8/11/86

EPA 511 TEST PROGRAM
****

CUSTOMER: DEACC DEVICES, INC.
TORONTO, CANADA

TEST-TO-TEST VARIABILITY WORKSHEET

AUTO/YR: 1982 OLDSMOBILE
MODEL: CUSTOM CRUISER BROWN
VIN: 163AP35Y6CX106335
DRIVER: CHUCK SHOEMAKER
OPERATOR: RAY SINCLAIR
COMMENTS: BEFORE/AFTER BACK-TO-BACK

ENGINE CID: 305/8 CYLINDER
TRANSMISSION: AUTO
A/C EQUIPPED: YES
CURB WT: 3964
INERTIA WT: 4250
HP ACT/IND: 13.2/11.2

BASELINE TEST RUN	VEHICLE ODOMETER	TEST DATE:.....8/12/86, 8/13/86 COLD START FTP					HFET (AFTER HFET PREP)				
		HC	CO	CO2	NOX	F.E.	HC	CO	CO2	NOX	F.E.
1	61,567	0.543	2.897	623.5	1.380	14.083	0.131	0.359	401.7	1.418	22.02
2	61,607	0.484	2.554	612.5	1.313	14.348	0.139	0.435	388.6	1.335	22.76
MEAN		0.514	2.726	618.0	1.347	14.22	0.135	0.397	395.1	1.377	22.39
S.D.		0.042	0.243	7.7	0.047	0.187	0.006	0.054	9.266	0.059	0.518
C.V.		8.1	8.9	1.3	3.5	1.3	4.2	13.5	2.3	4.3	2.3
		****	****	******	****	****	****	****	****	****	****

FINAL TEST RUN	VEHICLE ODOMETER	TEST DATE:.....8/15/86, 8/16/86 COLD START FTP					HFET (AFTER HFET PREP)				
		HC	CO	CO2	NOX	F.E.	HC	CO	CO2	NOX	F.E.
1	61,646	0.592	3.512	671.2	0.842	13.068	0.164	0.670	414.7	0.885	21.30
2	61,696	0.591	3.257	668.0	0.794	13.138	0.167	0.596	416.5	0.864	21.22
MEAN		0.592	3.385	669.6	0.818	13.10	0.166	0.633	415.6	0.875	21.26
S.D.		0.001	0.180	2.3	0.034	0.049	0.002	0.052	1.263	0.015	0.060
C.V.		0.1	5.3	0.3	4.1	0.4	1.3	8.3	0.3	1.7	0.3
		****	****	******	****	****	****	****	****	****	****
PERCENT CHANGE		15.19	24.18	8.4	-39.25	-7.83	22.59	59.45	5.19	-36.47	-5.05
==========		======	======	======	======	======	======	======	======	======	======

NOTE 1: Exhaust emissions are in grams per mile, fuel economy is in miles per gallon.
NOTE 2: C.V. is the Coefficient of Variation for the tests.

NOTE 3: C.V. = $\frac{\text{STANDARD DEVIATION}}{\text{MEAN}} \times 100\%$

Detailed Example of Analysis of Variance Calculation

FTP HC Emissions

	OLDS	CAMERO	ROW TOTALS
Baseline	.543	.294	
	.484	.281	
SUM	1.027	.575	1.602
DeAcc	.592	.301	
	.591	.552	
SUM	1.183	.853	2.036
TOTALS	2.210	1.428	3.638

r=2 No. of Rows = No. of Configurations (with and w/o Device)

c=2 No. of columns = No. of Vehicles

N=8 Total No. of Tests

n=2 No. of Replications

T= 3.638 sum of X's where X = value of each test

$T^2/N = 3.638^2/8 = 1.654$

SX^2= Sum of X^2 = 1.790

SS_c Sum of squares among columns (cars)

$= (2.210^2 + 1.428^2)/(2x2) - 1.654 = .076$

$T_c^{\ 2}$ nxc T^2/N

SSr= Sum of squares among rows (device vs no device)
$(1.602^2 + 2.036^2)/(2x2) - 1.654 = .024$

Tr^2 rxc T^2/N

SS_{cr}= column row interaction = Sum of squares of rows and columns
$= (1.027^2 + 1.183^2 + .575^2 + .853^2)/2 - 1.654 - .076 - .024 = .0002$

$T_{cr}^{\ 2}$ n T^2/N SS_c SS_r

SS_t = Sum of squares total

$=SX^2$ T^2/N

$= 1.790 - 1.654 = .135$

FTP HC Emissions

Source	Sum Squares SS	Degrees Freedom DF	Mean Square SS/DF	Mean Sq. Ratio MSR=MS/MSRS	MSR w 90% Confid. Factor
Among col Cars Effect	.076	2-1=1 c-1	.076	9.175	4.54
Among Rows Device Effect	.024	2-1=1 r-1	.024	2.826	4.54
Col/Row Interaction	.002	(2-1)x (2-1)=1 (c-1)(r-1)	.002	.223	4.54
Residual	.033	Total-Sum Of Prev 4-3=4	.008		
Total	.135	N-1=8-1=7			

2.826 is less than 4.54 therefore no statistically signficant device effect on emissions

Summary of Statistical Analysis of Device Effects
By Analysis of Variance

	Minimum Mean Square Ratio	MSR @ 90% Confidence	Conclusion
FTP			
HC Emissions	2.826	4.54	No Device Effect
CO Emissions	13.524	4.54	Negative Device Effect Increased CO
NO_x Emissions	333.478	4.54	Positive Device Effect Reduced NO_x
MPG Economy	50.175	4.54	Negative Device Effect Reduced Fuel Economy
HFET			
HC Emissions	1.927	4.54	No Device Effect
CO Emissions	5.435	4.54	Positive Device Effect Reduced CO
NO_x Emissions	280.072	4.54	Positive Device Effect Reduced NO_x
MPG Economy	3.239	4.54	No Device Effect

Attachment Q

UNITED STATES ENVIRONMENTAL PROTECTION AGENCY

ANN ARBOR, MICHIGAN 48105

OFFICE OF
AIR AND RADIATION

January 13, 1987

Mr. Stephen DePakh, President
DeAcc Devices Incorporated
90 Warren Road, Suite 110
Toronto, Canada M4V2S2

Dear Mr. DePakh:

We received your letter of October 31, which included the test packets for independent laboratory testing of your DeAcc device. We have reviewed the packets and have analyzed the results.

The test program was conducted in accordance with the test plan we suggested in our previous correspondence. The vehicles and the test variability are acceptable, and there appears to be no technical reason to rerun tests or conduct tests on additional vehicles.

The FTP and HFET test data were analyzed by the analysis of variance (ANOVA) technique to determine if the data indicated that there was a statistically significant difference in emissions or fuel economy due to the device. For the FTP and HFET, although the device reduced NO_x emissions, there was an increase in FTP CO emissions and a fuel economy penalty for the FTP. The HFET CO emissions indicated an overall improvement; however, one of the two vehicles showed an increase in CO emissions. The increase in HC emissions for both driving cycles and changes in HFET fuel economy for the device were not statistically significant.

Since vehicles are designed to meet the emission standards for HC, CO, and NO_x, our policy in evaluating emissions and/or fuel economy devices is that a device must first not show an adverse effect in any emissions and fuel economy tests and second must show a significant improvement. Clearly, the DeAcc device did not pass these criteria and; thus, we will not proceed to the in-house testing phase. The NO_x reduction with the device can reasonably be attributed to the increase in exhaust gas recirculation (EGR) rather than the postulated catalytic reactions in the copper line.

A section 511 evaluation report on the DeAcc device will be prepared and a notice published in the Federal Register

announcing the conclusions of our evaluationn and the availability of the final report. You will be sent a draft copy of the final report and the notice prior to their release. Additionally, the DeAcc device will be added to our list as a device for which an evaluation was performed. Devices on this list are categorized by device type and effectiveness. This list is distributed to interested parties upon request.

Enclosed are the test packets and summary sheets you provided. If I can be of any further assistance, please contact me at (313) 668-4299.

Sincerely,

Merrill W. Korth
Device Evaluation Coordinator
Test and Evaluation Branch