Stationary Source Enforcement Series

EPA 340/1-78-001a
APRIL 1978

JET ENGINE TEST CELLS — EMISSIONS AND CONTROL MEASURES: PHASE 1

U.S. ENVIRONMENTAL PROTECTION AGENCY
Office of Enforcement
Office of General Enforcement
Washington, D.C. 20460

EPA-340/1-78-001a

April 1978

JET ENGINE TEST CELLS -- EMISSIONS AND CONTROL MEASURES: PHASE 1

by

D. E. Blake

Contract No. 68-01-3158, Task 4

EPA Project Officer: James Herlihy

Acurex Report TR-78-102

Prepared for

U.S. ENVIRONMENTAL PROTECTION AGENCY
Division of Stationary Source Enforcement
Technical Support Branch

This report was furnished to the U.S. Environmental Protection Agency by the Aerotherm Group of Acurex Corporation, Mountain View, California, in fulfillment of Contract No. 68-01-3158. The contents of this report are reproduced herein as received from the contractor. The opinions, findings, and conclusions expressed are those of the author and not necessarily those of the U.S. Environmental Protection Agency.

The Enforcement Technical Guideline series of reports is issued by the Office of Enforcement, Environmental Protection Agency, to assist the Regional Offices in activities related to enforcement of implementation plans, new source emission standards, and hazardous emission standards to be developed under the Clean Air Act. Copies of Enforcement Technical Guideline reports are available -- as supplies permit -- from the Air Pollution Technical Information Center, Environmental Protection Agency, Research Triangle Park, North Carolina, 27711, or may be obtained, for a nominal cost, from the National Technical Information Service, 5285 Port Royal Road, Springfield, Virginia, 22161.

ACKNOWLEDGEMENT

The author wishes to acknowledge the help and guidance of Dr. James Herlihy, the Project Officer, and Mr. Charles Seeley of EPA Region IX. In addition, many persons provided useful information during the course of this program. Appendix B presents a list of their names.

ABSTRACT

This report discusses the current state of the art of pollutant emission measurement and cleanup technology related to military jet engine test cells. Considerable emissions data from jet engines is available, but data from test cell stacks are sparse. Gaseous emission data for the major pollutant species (CO, NO, NO_2, SO_2, SO_3) are reliable; particulate, opacity, and unburned hydrocarbon data are less so.

The five types of test cell cleanup methods that have been experimentally evaluated -- electrostatic precipitator, nucleation scrubber, fuel additives, thermal converter, and fuel atomization improvement -- are described in detail. Other, less promising methods are briefly discussed. Several methods are quite effective in reducing test cell emissions. Fuel additives are effective in reducing test cell plume opacity. Capital and operating cost data on these methods are presented. For the nucleation scrubber, the best-developed cleanup technology, three cost estimates from different sources are given.

Phase II of this study will discuss operating parameters, state regulations, additional control device cost data, environmental impact, clean combustor development status, and additional emissions data.

TABLE OF CONTENTS

Section		Page
1	INTRODUCTION	1
2	SUMMARY	3
3	JET ENGINE TEST CELLS -- PROCESS DESCRIPTION	9
4	LOCATION OF MILITARY TEST CELLS	19
5	EMISSIONS DATA	25
	5.1 Opacity	25
	5.2 Gaseous Emissions	27
	5.3 Particulate Emissions	37
6	TEST CELL EMISSION CONTROL TECHNOLOGY	47
	6.1 Electrostatic Precipitator	50
	6.1.1 ESP Experimental Apparatus	52
	6.1.2 Experimental Results	56
	6.1.3 Costs	59
	6.2 Nucleation Scrubber	60
	6.2.1 Scale Model Scrubber Tests	75
	6.2.2 Proposed Scrubber Facilities	79
	6.2.3 Costs	80
	6.3 Fuel Atomization	83
	6.3.1 Methane Absorption	83
	6.3.2 Emulsions	84
6.4.	Thermal Converter	86
	6.4.1 Thermal Converter Configuration for Test Cells	86
	6.4.2 Pollutant Conversion Performance	89
	6.4.3 Costs	90
	6.5 Fuel Additives	90
	6.5.1 Civilian Airline Additive Use	97
	6.6 Other Abatement Methods	99
	6.6.1 Cyclone Separators	103
	6.6.2 Fabric Filters	103
	6.6.3 Venturi Scrubbers	104

TABLE OF CONTENTS (Concluded)

Section	Page
6.6.4 Coanda Noise Suppressor	105
6.6.5 Hush House	107
6.7 Summary of Cleanup Technology	109
REFERENCES	111
APPENDIX A -- SCRUBBER RETROFIT COST ESTIMATE	115
APPENDIX B -- INFORMATION SOURCES	133

LIST OF ILLUSTRATIONS

Figure		Page
1	Stationary Test Cell (Oceana Type Shown)	10
2	Travis AFB Test Cell Building	11
3	Tinker AFB J79 Engine Test Cell	12
4	Augmenter Tube for Tinker AFB Test Cell	14
5	Test Cell with Open-End Augmenter	16
6	SAE Smoke Number Versus Opacity for Jet Engines	28
7	Relationship Between SAE Smoke Number and Soot Density for Jet Engines	29
8	NO_x Emissions from Jet Engines	32
9	Comparison of Typical Turbine Engine Exhaust Gas SO_2 Concentrations with Various Air Pollution Control District Limits	34
10	Unburned Hydrocarbon (UHC) Tailpipe Emission Levels of Jet Engines at Idle	35
11	Particulate Mass Loading for Jet Engines, Measured at the Tailpipe	44
12	Electrostatic Precipitator Experimental Setup -- Black Point No. 1 Test Cell	53
13	Electrostatic Precipitator Test Unit	55
14	Nucleation Scrubber Schematic	61
15	Teller Environmental Systems, Inc. Augmenter	63
16	Nucleation Scrubber at Jacksonville NAS	71
17	Aerial View of Jacksonville Scrubber	73
18	Pilot Scrubber System on Black Point No. 1 Test Cell at the Jacksonville Naval Air Station	76
19	Schematic Diagram of Basic Thermal Converter Configuration	87
20	Effect of Ferrocene on Particulates	98

LIST OF ILLUSTRATIONS (Concluded)

Figure		Page
21	Principle of Coanda Device	106
22	Hush House at Miramar Naval Air Station	108

LIST OF TABLES

Table		Page
1	Operational Navy Test Cells and Test Stands.....	20
2	Operational Air Force Test Cells and Test Stands.....	21
3	Operational Army Test Cells and Test Stands.....	23
4	Total Test Cells -- All Services.....	23
5	Particulate Size Distribution from J57 Jet Engine.....	39
6	Comparison of Engine and Stack Particulate Measurement...	43
7	Jet Engine Test Cell Control Measures.....	47
8	Emission Data from the Electrostatic Precipitator at Jacksonville Naval Air Station, Black Point No. 1 Test Cell -- J79 Engine.....	58
9	Nucleation Scrubber at Jacksonville Naval Air Station, Emission Levels from Black Point No. 1 Test Cell.....	65
10	Observations During Test Cell Cleanup System Test.....	68
11	Test Results on Pilot Scrubber at the Black Point No. 1 Test Cell at Jacksonville Naval Air Station, Using a J79 Engine.....	78
12	Scrubber Retrofit Cost Estimate -- Naval Air Systems Command.....	81
13	Scrubber Retrofit Cost Estimate -- Jacksonville NARF.....	81
14	Comparison of Scrubber Cost Estimates.....	82
15	Effect of Water/Fuel Emulsion on Combustion.....	85
16	Thermal Converter Cost Estimate.....	91
17	Metallic Fuel Additives Evaluated by the Naval Air Propulsion Test Center.....	93
18	Engines Suitable for Use with Ferrocene Additives.....	94
19	Effect of Fuel Additive on Stack Opacity.....	95
20	Fuel Additive Use by Commercial Airlines.....	100

LIST OF TABLES (Concluded)

Table		Page
21	Summary of Particulate Abatement Systems.....	101
22	Comparative Data -- Alternate Gas Cleaning Systems.....	102

SECTION 1

INTRODUCTION

Jet engine test cells are used for testing jet engines after maintenance or overhaul. They house the instruments, fuel delivery systems, and noise suppression devices required for the testing. Test cells are maintained by the U.S. Army, Navy, and Air Force, civilian airline maintenance bases, and gas turbine manufacturers. When jet engines are tested, a dark sooty particulate is produced by the gas turbines. And because test cells usually have vertical exhaust stacks, these emissions are often visible from a considerable distance. Several jet engine test cell facilities have recently been cited for violation of local Air Pollution Control District opacity regulations. Some test cells may be in violation of particulate mass loading and NO_x stationary source emission standards as well.

The military services are aware of these problems, and have put into effect a number of programs to characterize and control test cell emissions. The U.S. Air Force is primarily responsible for determining the nature of test cell emissions and how they affect overall military base and regional pollutant levels. The U.S. Navy has the responsibility for evaluating ways of reducing emissions and has investigated many different methods. Civilian airlines have not reported any comparable studies.

This report is limited to military test cells. It considers both the emissions data available and the current state of test cell cleanup technology. Because of the great amount of current activity in these areas, a great deal of recent information has not been published. Accordingly, much of the information in this report was obtained from interviews with people actively working on test cell emissions programs. Mr. W. C. Morhard, Environmental Coordinator, Naval Air Systems Command, helped a great deal in identifying people working on various Navy programs and in obtaining permission for the author to visit and discuss their work. Appendix B gives a list of people who provided significant useful information. The guidance of the Project Officer, Dr. James Herlihy and Mr. Charles Seeley of EPA Region IX, is also gratefully acknowledged.

Additional aspects of test cells will be considered in Phase II of this study. These will include (a) discussion of process variables that affect emission, (b) summary of state and local regulations, (c) additional capital and operating costs, (d) environmental impact of test cells, (e) discussion of clean combustors, and (f) a summary of available emission data.

SECTION 2

SUMMARY

In this report, Aerotherm Division of Acurex Corporation analyzes what is currently known about pollutant emissions from jet engine test cells and about cleanup technology for these cells. This analysis is limited to military test cells in the United States and was undertaken for the Stationary Source Enforcement Division of the Environmental Protection Agency.

To provide a background for discussion of test cell emissions and control technology, the report begins with a description of typical jet engine test cells and a discussion of how they operate. This discussion describes how augmenter tube design and exhaust water spray cooling practice can affect emissions and cleanup technology. The design of the augmenter affects the dilution ratio of the exhaust stream, and therefore the opacity, while the presence or absence of water spray cooling of the engine exhaust affects particulate and unburned hydrocarbon emissions in several ways. In addition, the report also points out that test cells are not standardized, and that similar engines can produce different opacity levels in different test cell geometries.

Next, U.S. military test cells are categorized by type of cell, military service, and location. There are a total of 130 permanent test

cells, 88 demountable test cells, and 273 test stands for the Army, Navy and Air Force.

In Section 5 of the report, the validity of existing data and measurement methods is discussed and analyzed. Opacity, gaseous emission, and particulate emission data are treated separately. Data on the opacity of plumes from test cell stacks are found to be widely available. Actual emission data are given in Section 6 of the report.

The correlation between stack opacity and engine exhaust smoke number is also discussed. This correlation is not particularly good, but it still gives useful information about the relationship between engine particulate output and test cell opacity.

Gaseous emission data from jet engines are also widely available, but have usually been taken at or immediately downstream from the engine. Samplings of test cell stacks are sparse. Methods for measuring the concentration of NO, NO_2, CO, and CO_2 are reasonably accurate and reliable in the hands of knowledgeable analysts. Furthermore, engine tailpipe data should be readily transformable to stack emissions data by accounting for augmentation air, because these gaseous pollutant species are substantially unchanged between engine exhaust and stack outlet. After the exhaust gases leave the tailpipe, cooling is so rapid that essentially no more NO_x is formed. SO_x is usually not measured but is calculated from fuel sulfur specifications. Measuring unburned hydrocarbons (UHC) presents problems. Flame ionization adequately measures overall hydrocarbon vapor levels. But analyzing individual hydrocarbon species, which requires collection and subsequent analysis, is complicated by the fact that UHC can exist in both vapor and particulate form. This means that the sampling method used to collect the UHC must be carefully chosen.

Particulate emission data are the most difficult to obtain and are in general the least reliable. There are almost no good particulate data obtained by sampling at the top of test cell stacks; and, the present state of knowledge does not permit accurate prediction of particulate stack emissions based on particulate measurements at the engine. Special problems in measuring particulate emissions include particle loss and reentrainment from noise suppression equipment in the stack and the inability to account for the effects of exhaust water spray cooling.

In Section 6 of the report, five test cell exhaust cleanup methods which have been experimentally evaluated are discussed at some length. Several other possible cleanup methods which have been judged infeasible are also discussed in less detail.

Fuel additives are generally organometallic compounds added in small concentrations to the fuel burned in turbine engines. The metallic component of the additive acts catalytically to improve or at least modify combustion. The main effect of fuel additives is on opacity, although a moderate but inconsistent reduction in particulate loading has also been reported. Both the Navy and the Air Force are pursuing experimental programs to evaluate different kinds of fuel additives. The Navy has settled on an iron-based additive for its engines, while the Air Force is considering a manganese-based additive. Both appear able to reduce opacity of test cells to below 20-percent opacity without damage to the engines being tested. Problems include toxicity (for the manganese compound) and thermal sensitization (for the iron compound). The cost of using fuel additives at test cells would be negligible.

Improving fuel atomization is another exhaust cleanup method now being tested. With this method, an emulsion of about 10-percent water in

jet fuel is used for testing in cells. The water globules present in the emulsion flash in the burners. This causes finer atomization of the fuel, and thus better combustion. Improvement in particulate and NO_x emissions and opacity have been reported. This work is in a relatively early stage.

A third experimental cleanup method is the thermal converter. A thermal converter consists of additional fuel burners downstream from the engine which oxidize CO, carbonaceous particulate, and UHC. In experiments conducted to date, the thermal converter has proven very effective, reducing smoke number by a factor of 10. NO_x production by the additional fuel burners is apparently not a severe problem. The main difficulty with the thermal converter is its high fuel consumption and operating cost. Capital cost for a Type A test cell retrofit has been estimated at $500,000, with a similar amount required annually for operation.

A fourth cleanup device, the electrostatic precipitator (ESP), has been evaluated in 1/65 scale model tests on a test cell at Jacksonville Naval Air Station. The ESP showed reasonable collection efficiency, averaging 59 percent when particulate was measured by EPA Method 5, and higher (80 to 95 percent) when measured by a dry filter method.

Problems with arcing and high voltage lead failure were noted by the Jacksonville Naval personnel testing the ESP. These problems were reported to be related to water droplet carryover into the ESP from the quench system at the augmentor. Similar problems would be anticipated in the demonstration of a full-sized test cell ESP unless excess water carryover is eliminated. On the other hand, operating completely dry (no quench water) means higher volumetric flowrates in the ESP.

According to reports from Jacksonville Naval Air Station, more development work is required to determine if a satisfactory operating

condition can be maintained. The cost of installing an ESP on an existing 500,000 acfm test cell has been estimated at $850,000. Annual operating expenses are estimated at $32,000.

The fifth cleanup device considered is the wet packed cross-flow scrubber. It is the only test cell cleanup device that has been given full-scale evaluation on a cell. A prototype installation on the Black Point No. 1 cell at Jacksonville NAS is a nucleation scrubber mounted on the top of the cell stack. Water is injected into the engine exhaust at the augmenter tube, causing the nucleation and particle growth. The larger particles are carried up the stack and collected in the packed scrubber. Limited sampling of the cleaned exhaust showed that at least 90 percent of the particulate had been removed and the opacity reduced to below 10 percent. More extensive sampling of a scale model packed bed scrubber showed that 50 to 70 percent (average of 55 percent for all tests) of the particulates and nearly all of the condensible hydrocarbons had been eliminated. Two Navy estimates for the cost of retrofitting 500,000 acfm test cell facilities with nucleation scrubbers, including closed-loop water treatment, are $1,515,000 and $1,944,735. Teller Environmental Systems, Inc., the system engineer/contractor for the prototype scrubber, estimates the cost of retrofitting at $705,650.

In summary, several methods are currently available for considerably reducing test cell pollutant emissions. Particulates can be effectively removed by the scrubber, the ESP, and the thermal converter. Hydrocarbons are substantially removed by the scrubber and the thermal converter. The major technical issues relate to true capital costs, and the impact on air quality of controlled versus uncontrolled test cells.

SECTION 3

JET ENGINE TEST CELLS -- PROCESS DESCRIPTION

Jet engine test cells house the engine and test instrumentation during engine testing. Test cells are maintained by the military services, commercial airlines and turbine engine manufacturers. Most test locations contain only a few cells, although some large engine manufacturers maintain up to 70 test cells at their test facilities. Existing test cells were designed mainly to suppress noise, and they are reasonably effective at reducing the very high sound levels at the engine tailpipe (in excess of 180 dB for some engines) to tolerable levels.

Five kinds of test facilities are used by the military for out-of-aircraft engine testing. These are depot permanent test cells, Type A and Type C permanent test cells, demountable test cells, and test stands. Depot cells are permanent masonry structures, fully instrumented. Type A cells are similar, but less fully instrumented. These kinds of cells are used to checkout engines that have been overhauled (completely rebuilt).

Figures 1, 2, and 3 are diagrams of typical depot or Type A military test cells. While there are superficial differences between the three cells shown, the basic structures are similar. The test cell itself is usually a massive reinforced concrete structure, designed to withstand the intense vibrations generated by the engine. Air is drawn into the cell through various kinds of acoustical baffling by the engine acting as

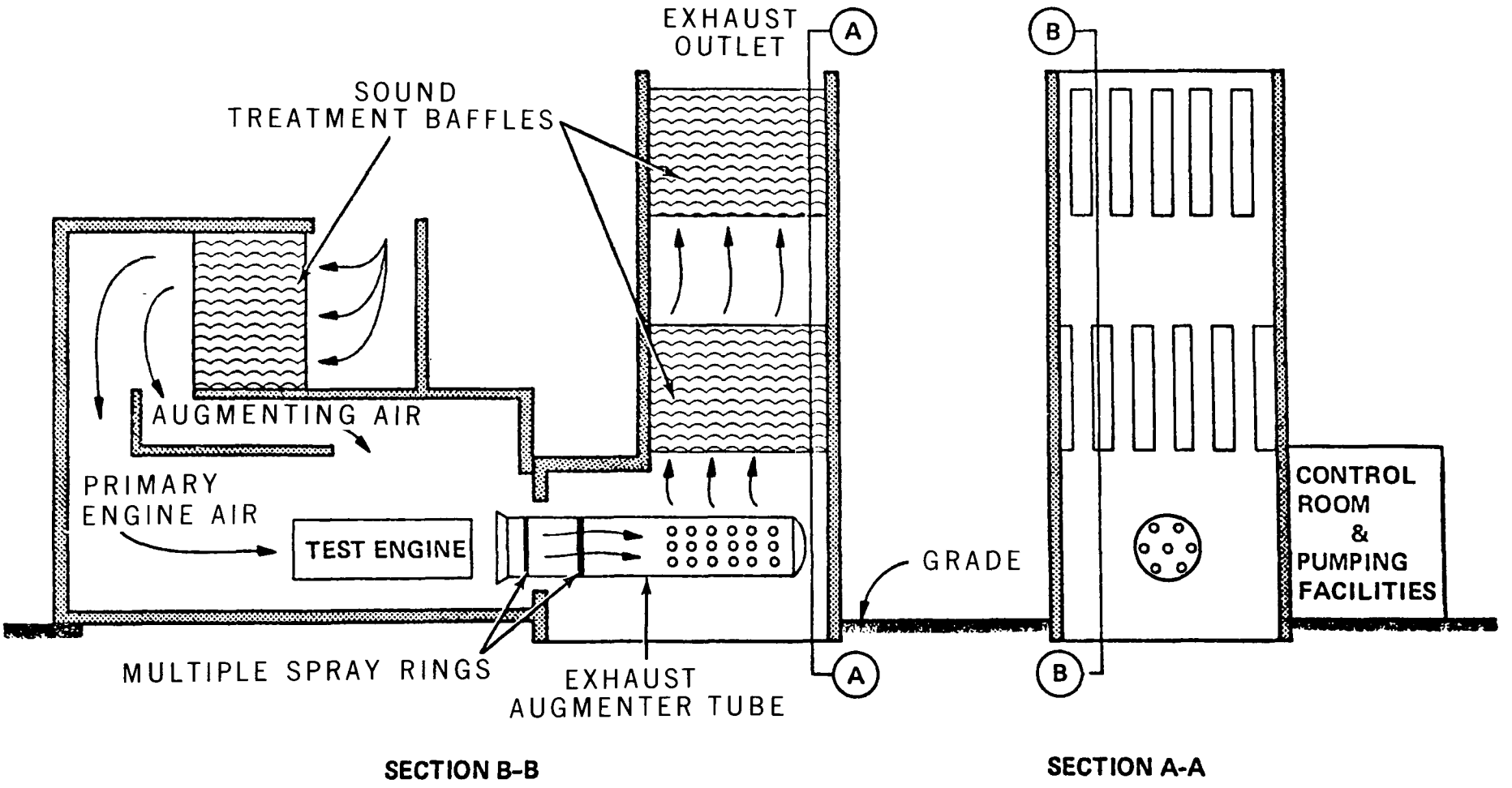

Figure 1. Stationary test cell (Oceana type shown) (Reference 10).

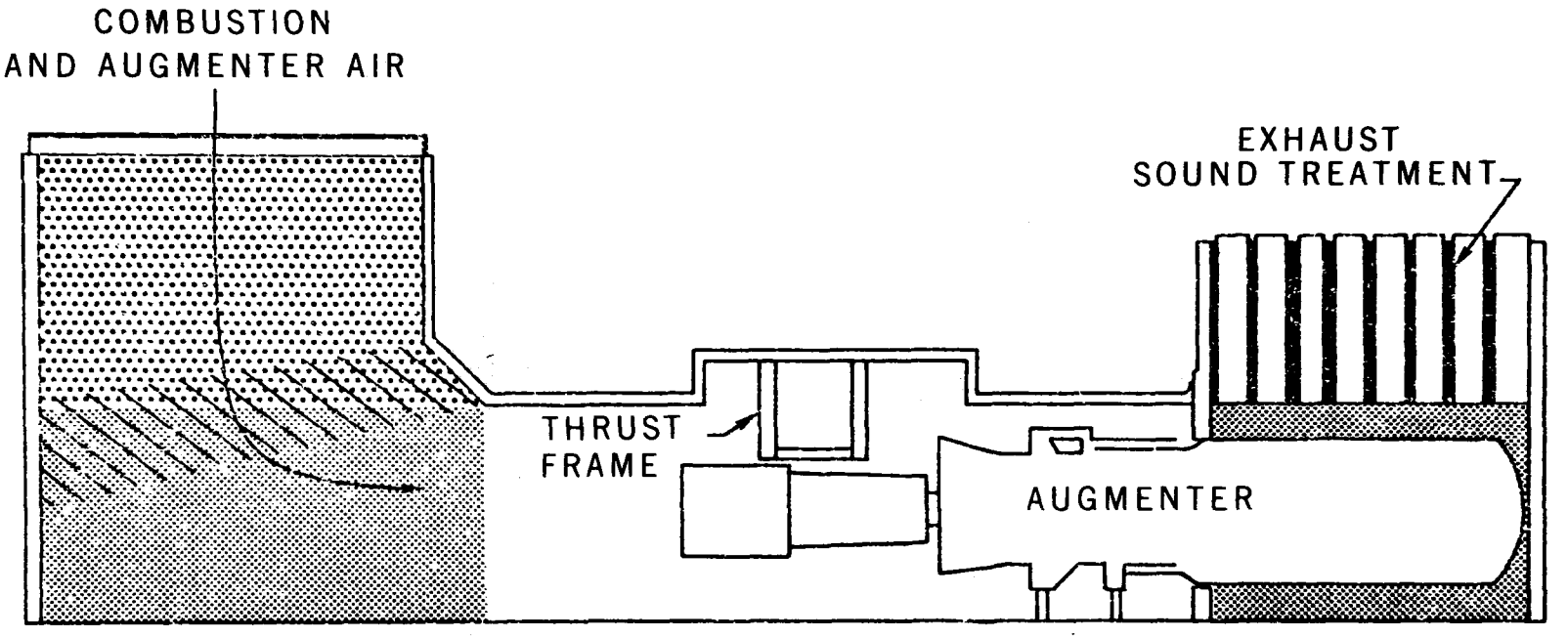

Figure 2. Travis AFB test cell building (Reference 10).

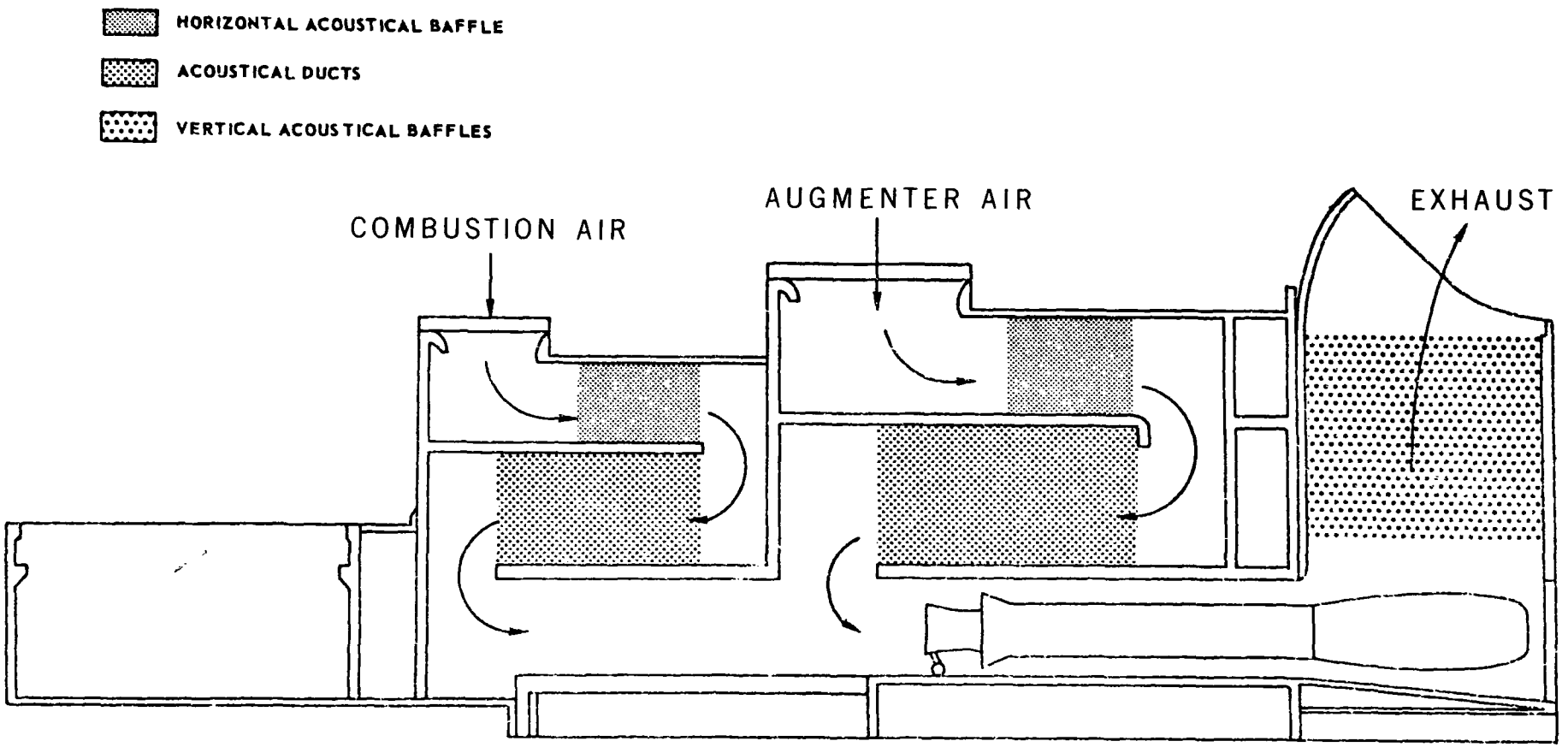

Figure 3. Tinker AFB J79 engine test cell (Reference 17).

an ejector. (As with all ambient-pressure test cells, no booster fans are used.) Although not shown on the figures, adjustable dampers are often provided near the inlet-air acoustical baffler to control the engine airflows and test cell interior pressure levels.

The test engine is fastened to a thrust frame or stand. This is in turn firmly anchored to the cell. The thrust frame contains the instrumentation used to monitor engine thrust. Immediately behind the engine is mounted the augmenter tube, so named because it augments the flow of air through the cell. The augmenter is simply an ejector that serves several purposes: (1) powered by the high energy engine exhaust stream, the augmenter reduces the test cell pressure to a level equivalent to the pressure at the engine compressor inlet; (2) the air drawn over the engine provides some of the cooling normally obtained by the motion of the aircraft in flight; and (3) the air entrained by the augmenter cools and dilutes the engine exhaust. The cooling produced protects the integrity of the test cell by keeping the concrete below the spalling temperature of $350^{o}F$ to $400^{o}F$, and protects the noise control equipment. Since a test cell augmenter must be used with many different types of engines, each with its own air pumping characteristics, exhaust diameter, and exhaust temperature, the main concern is usually to assure that thermal damage to the test cell is minimized, rather than to optimize the augmenter's airflow properties.

A typical augmenter tube is shown in Figure 4. The bellmouth position is adjustable so that the spacing between the engine and the augmenter can be varied according to the type of engine being tested. The engine exhaust gas and entrained air are carried down the steel augmenter tube to a position under the exhaust stack. The augmenter tube is usually

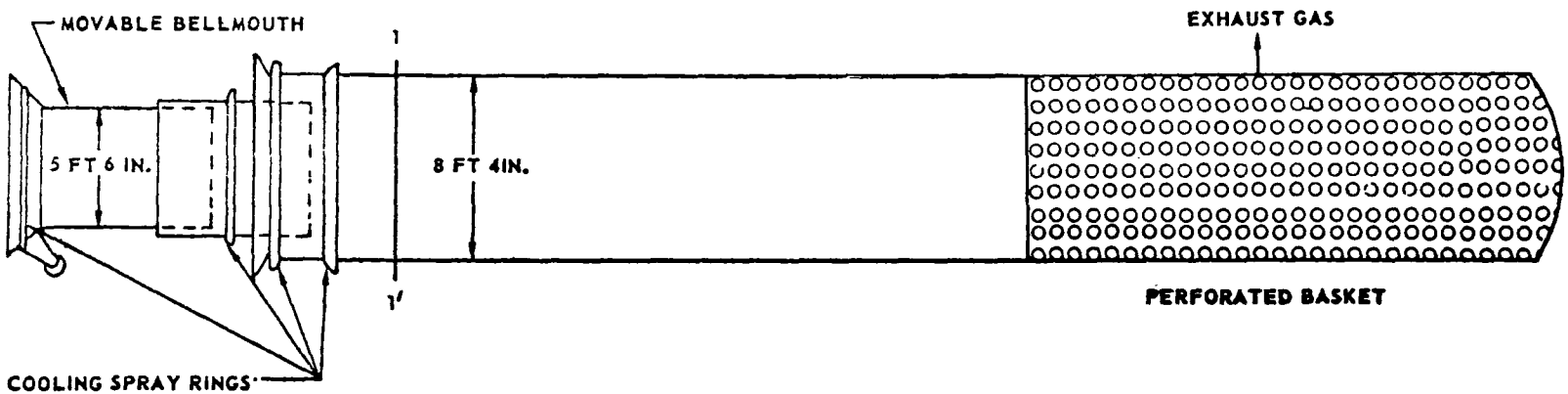

Figure 4. Augmenter tube for Tinker AFB test cell (Reference 10).

perforated at this point to allow the gas to diffuse out more or less uniformly. This prevents hot spots which could cause damage to the concrete cell.

Some augmenters, however, are open-ended. Figure 5 shows a test cell with an open-ended augmenter. Exhaust gases are directed up the stack by permanently mounted turning vanes. The Black Point No. 1 cell at Jacksonville Naval Air Station, where considerable work on scrubber and electrostatic precipitator cleanup devices has been done, is of this type.

The cooling spray rings shown in Figure 4 provide important additional cooling at high engine power settings. The cooling spray rings have nozzles mounted on the inside surface that spray water radially into the hot gas stream. Water spray cooling is universally used during afterburner operation. In most test facilities, water spray is used at all engine power settings above idle, but some test cell operators choose to use cooling water only at military (100-percent) power and afterburner settings. In some test cells, cooling water is automatically turned on when the exhaust gas reaches a predetermined temperature (usually 350°F).

Water spray cooling of exhaust gases affects pollutant emission in several ways. First, the water spray scrubs some particulate out of the exhaust stream. Excess runoff water flowing out of the augmenter is often quite black. Second, under some operating conditions (idle and afterburner), considerable amounts of unburned hydrocarbon vapors are found in the exhaust. Quenching the exhaust stream with water causes the condensation of these vapors to form additional particulate. Third, if excess amounts of water are sprayed, a saturated or supersaturated condition is attained. Water vapor condenses on particulate nuclei, causing particle growth. In addition, water droplets present in the stream will not

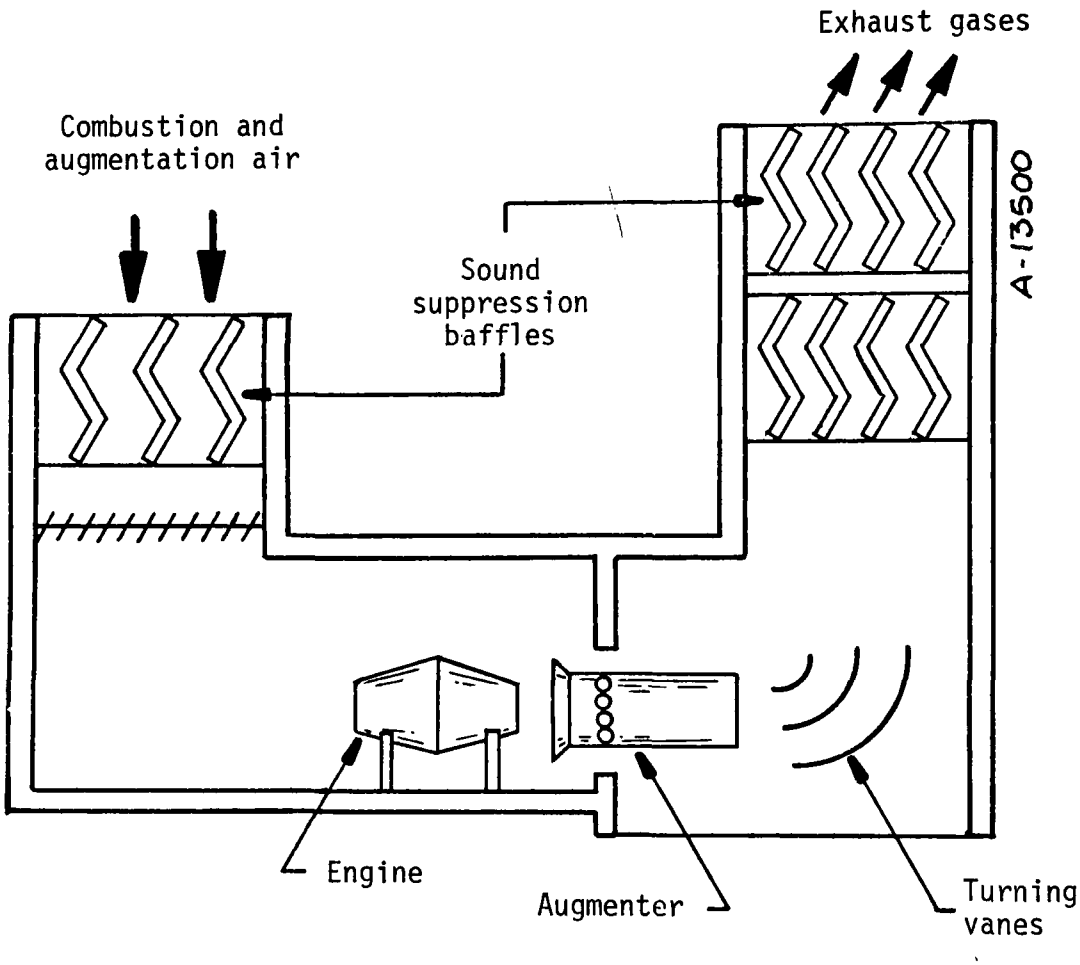

Figure 5. Test cell with open-end augmenter.

evaporate. The result, often seen when too much spray cooling water is used, is a dark, heavy plume that settles rapidly, causing considerable annoyance to those downwind of the test cell.

After the exhaust gases move out of the perforated basket (or collander) section of the augmenter tube, they leave the cell through a vertical stack. These stacks are often quite large: 200 to 400 square feet in cross-sectional area and 40 to 60 feet high are common dimensions. The stack is fitted internally with sound baffling and absorbent structures.

Permanent test cells in the United States are not standardized. While all cells share the same operational features (air inlet, engine test room, augmenter, stack, sound deadening structures), their internal arrangement can vary considerably. Stack diameters, engine-to-stack spacing, turning vane design, and augmenter tube design in general differ from cell to cell.

Differences in augmenter design have a particularly significant effect on air pollution control. As the design of the augmenter is more art than science, each test cell designer makes such changes in the augmenter as he thinks appropriate. As a result the air pumping characteristics and water spray cooling pattern of each augmenter seems to be unique. The augmentation ratio of test cells (air entrained divided by engine exhaust) is adjustable, usually by varying the engine-to-augmenter distance. It ranges from about 0.6 to 3, depending on engine power level. But the pattern of airflow in the augmenter tube and the water pattern are not adjustable. The amount of particulate scrubbed out of the exhaust stream, the amount of hydrocarbon vapor condensed, the particulate wall losses, and the overall dilution ratios are therefore generally different from one cell to another, even when the same engine is being tested.

This is a complicating factor both in determining emissions from test cells and in designing control devices.

Other Types of Test Facilities

Like Type A cells, Type C cells are usually constructed of reinforced concrete. Some, however, are made of metal. They are permanent fixtures, similar in shape to Type A cells but commonly only 70 to 80 percent of their size. Type C cells are not fully instrumented, and often lack thrust measurement instrumentation. They are used for testing engines that have undergone intermediate level repair -- that is, repair that does not involve the hot section of the engine.

Demountable test cells are of metallic construction and are usually smaller than Type C test cells. These cells can be taken apart and moved if necessary, although they are large enough and complex enough that moving them is not a simple matter. They are instrumented to about the same extent as Type C cells.

Test stands are simply unenclosed frames designed to hold the engine while simple tests are performed. In test stands, the engine exhaust is not confined.

SECTION 4

LOCATION OF MILITARY TEST CELLS

Military jet engine test facilities are widely dispersed throughout the United States. Tables 1 through 4 show a census taken in July 1975. "Cells" include both Type A and Type C permanent test cells.

TABLE 1. OPERATIONAL NAVY TEST CELLS AND TEST STANDS (Reference 18)

Location	Cells	Stands
Alaska		2
Arizona	1	2
California	31	16
Florida	7	10
Georgia		2
Hawaii	1	6
Louisiana		2
Maine		1
Maryland	1	3
Massachusetts		1
Mississippi		3
New Jersey	9	1
North Carolina	10	6
Pennsylvania		3
South Carolina	1	1
Texas		7
Virginia	9	6
Washington	2	1
TOTAL	72	73

TABLE 2. OPERATIONAL AIR FORCE TEST CELLS AND TEST STANDS (Reference 18)

Location	Cells	Demountable Cells	Stands
Alabama		2	3
Alaska			3
Arizona		4	11
Arkansas		2	5
California	8	9	18
Colorado		1	3
Connecticut			1
Delaware	1	2	
Florida	4	3	10
Georgia		3	5
Hawaii		1	4
Idaho			3
Illinois		2	5
Indiana		1	3
Iowa		1	2
Kansas			4
Kentucky			6
Louisiana		2	6
Maine			2
Maryland	1	1	4
Massachusetts		1	4
Michigan		3	7
Minnesota			2
Mississippi		4	
Missouri		2	3
Nebraska		2	2
Nevada		1	4
New Hampshire	1	1	1
New Jersey	1		3
New Mexico		5	6
New York	1	1	5

TABLE 2. CONCLUDED

Location	Cells	Demountable Cells	Stands
North Carolina		1	5
North Dakota		2	3
Ohio		2	10
Oklahoma	15	3	2
Oregon			1
Pennsylvania			3
South Carolina	1	3	6
South Dakota		1	1
Tennessee			1
Texas	10	15	12
Utah	3	2	2
Vermont		1	
Virginia			5
Washington	1	3	
West Virginia			1
Wisconsin		1	
Wyoming			1
TOTAL	47	88	188

TABLE 3. OPERATIONAL ARMY TEST CELLS AND TEST STANDS (Reference 18)

Location	Cells	Stands
Pennsylvania		12
Texas	10	
Virginia	1	
TOTAL	11	12

TABLE 4. TOTAL TEST CELLS — ALL SERVICES (Reference 18)

	Cells	Demountable Cells	Stands
Navy	72		73
Air Force	47	88	188
Army	11		12
TOTAL	130	88	273

SECTION 5

EMISSIONS DATA

This section discusses each of the three main classes of jet engine test cell pollutants -- visible, gaseous, and particulate emissions. Pollutant measurement methods are analyzed, problems and drawbacks are pointed out, and an assessment of the general validity of published data is made. Actual emission data are given in Section 6, Test Cell Emission Control Technology. A compilation of emission data will be included in Phase II of this study.

5.1 OPACITY

The typical plume from a jet engine test cell is quite dark, because of the carbonaceous nature of the particles that are emitted. It can be easily seen by anyone in the area. Plume opacity is the only basis to date upon which test cells have been cited for violation of local Air Pollution Control District requirements. Plume opacity varies with the engine tested, the type of cell, the power setting used, and the kind of fuel being burned.

A basic problem exists in attempting to predict the opacity of the plume produced by the same engine tested in a different cell. In general, different opacities will result -- in some cases, markedly different. There are several reasons for this. One is the physical differences that exist between the test cells. Another is the different methods used in

operating test cells. And a third reason is the modification of particle size distribution that occurs between engine tailpipe and cell stack exit plane.

Test cells are individually designed and constructed, as are their augmenter tubes, exhaust quench spray devices, and noise abatement equipment. Accordingly, different cells, when testing the same engine, will show different augmenter air dilution ratios, exhaust gas quench rates, stack velocities, and opacities. Particle residence time will thus vary, as will unburned hydrocarbon condensate particle size distribution, and stack wall loss and reentrainment rates. The result will be different particle mass loadings and size distribution for different cells testing the same engine. In addition, the opacity of the plume can be affected by the augmentation ratio (ratio of entrained air to engine exhaust).

Because of these many variables, not only will a given engine give different opacity readings in different test cells, but the same engine in the same cell can from time to time give different readings because of variations in operating procedures.

Another parameter used to measure opacity is called the smoke number. The smoke number is usually used to quantify the opacity of the gas stream at or near the engine tailpipe. There are several methods for measuring smoke number. Although they are generally similar, they nonetheless result in different values for the smoke number of an engine (Reference 21).

The Society of Automotive Engineers (SAE) has established Committee E-31 which is responsible for development of recommended practices for measuring smoke emissions. Aerospace Recommended Practice (ARP) 1179 has resulted from their efforts (Reference 24). The technique for quantifying

smoke emission specified by ARP 1179 requires sampling and transfer of the exhaust stream, filtering of a known quantity of the sample gas through filter paper, and measurement of the reflectance of the soiled filter paper. A quantitative number (SAE smoke number between 0 and 100) is produced as a result of this technique.

The U.S. Navy has established a similar procedure (Method AS 1833) to give an opacity characteristic called the Navy smoke number. Although the SAE smoke number is more commonly reported, Navy smoke numbers can be converted to SAE smoke numbers by means of a good correlation (Reference 22).

Figure 6 shows the experimentally determined relationship between SAE smoke number and opacity. It is important to remember that the smoke number is measured at the engine, while the opacity is measured at the stack. As can be seen, the correlation is only approximate.

A correlation also exists between SAE smoke number and particulate mass concentration, the Champagne correlation (Reference 23). Figure 7 shows this correlation compared to actual engine data. Using Figures 6 and 7, particulate mass loadings at the engine can be compared to opacity readings at the stack.

5.2 GASEOUS EMISSIONS

There is a very large body of data for jet engine gaseous emissions. Most of these data have been collected at the engine tailpipe or somewhat downstream. Little data have been obtained by sampling at test cell exhaust stack exits. In spite of this lack of data, there is evidence that concentration measurements for gaseous emissions made at the stack exit are consistent with those made at the tailpipe when allowance

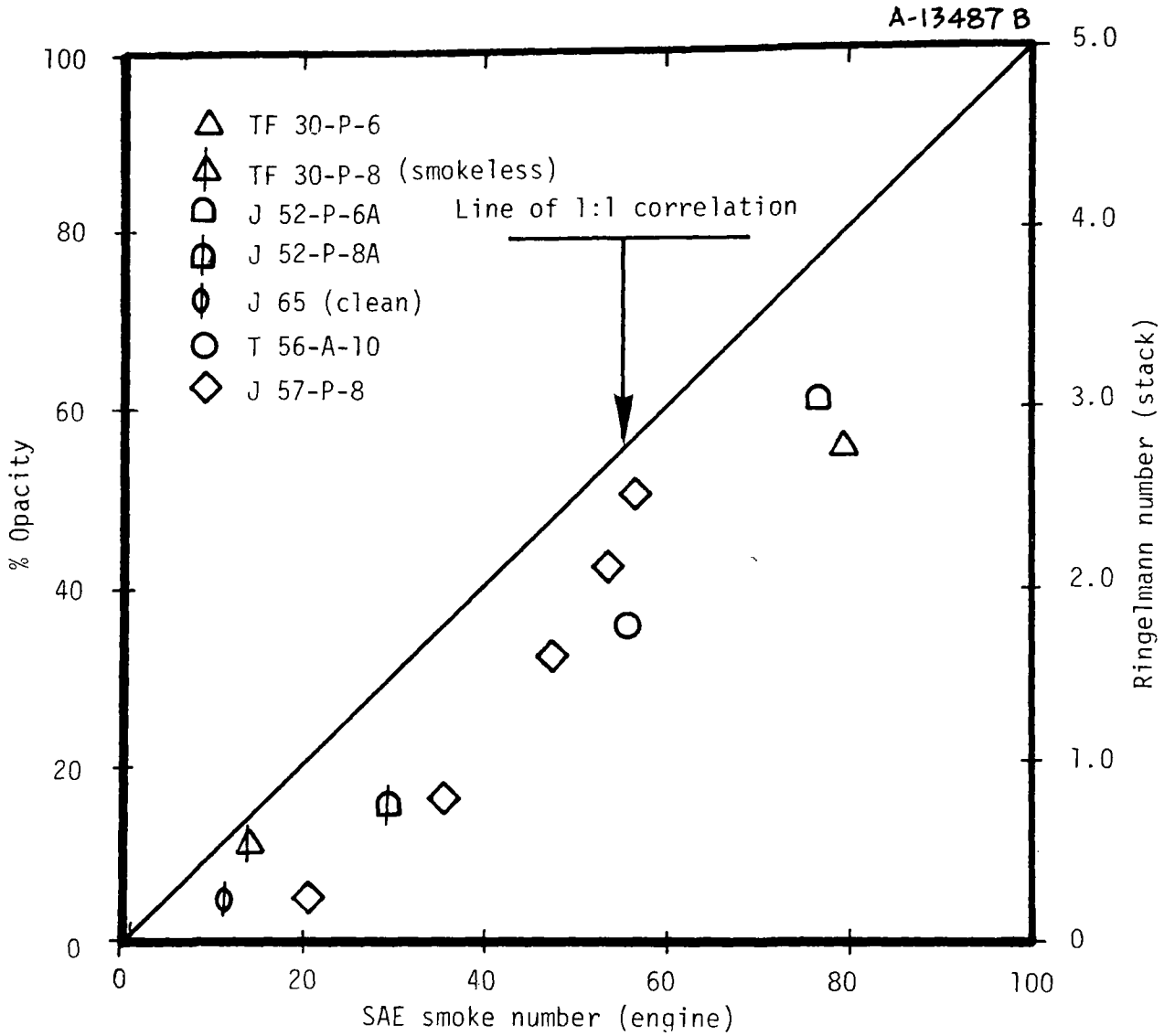

Figure 6. SAE smoke number versus opacity for jet engines (Reference 22).

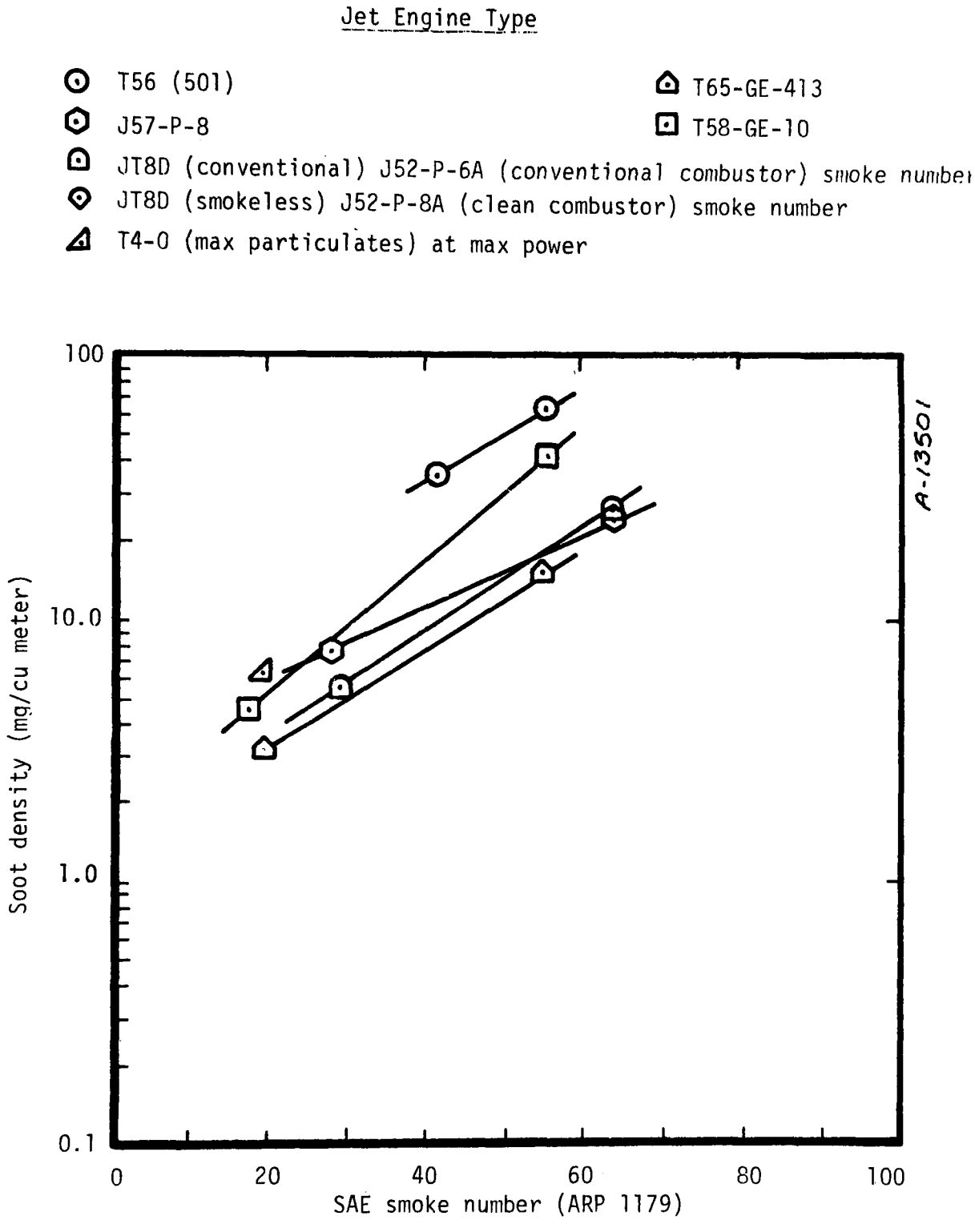

Figure 7. Relationship between SAE smoke number and soot density for jet engines (Reference 22).

is made for entrained air (Reference 25). This conclusion seems reasonable because the major gaseous pollutants -- CO, CO_2, NO_x, SO_x -- are unlikely to react chemically or to be adsorbed or absorbed between the engine tailpipe and the top of the cell stack. Unburned hydrocarbons are an exception to this rule in those cases where water spray causes condensation.

There are many data on gaseous emissions from jet engines in References 22, 26, 27, 28, 29, and 30. Although it is beyond the scope of this report to reproduce these data, each major pollutant gas is identified and briefly discussed in the following sections. In some cases, emission factor data are summarized.

Nitrogen Oxides

The nitrogen oxides NO and NO_2, which appear with limited amounts of N_2O and N_2O_5, are emitted from jet engine test cells, sometimes in significant concentrations. Nitrogen oxides are formed primarily in high temperature, high pressure combustion reactions like those that take place in jet engines at the higher power settings. Data taken in all studies confirm this prediction. The larger, newer jet engines (which burn with a higher combustion zone temperature) tend to have noticeably higher concentrations of NO_x in the exhaust, principally NO and NO_2. NO_2 constitutes 45 to 100 percent of NO_x at low engine power settings, and 10 to 30 percent at maximum power settings (Reference 30).

NO is eventually converted to NO_2 in the atmosphere by a slow oxidation reaction. Therefore, nitrogen oxide concentrations are usually reported as "total nitrogen oxides expressed as NO_2". Since concentrations are reported by volume, this means adding concentrations of NO and NO_2 plus twice the concentrations of N_2O and N_2O_5.

Large variations in NO_x concentration levels have been found for different engines, and even between engines of the same type. Figure 8 gives NO_x tailpipe concentration measurements (ppm actual) for several common engines. All measurements were made with the engine at intermediate power level which typically gives the highest NO_x concentration levels.

The Society of Automotive Engineers' standard test method ARP 1256 specifies techniques for detecting various gaseous pollutant species. The instrumentation method specified for measuring NO is nondispersive infrared (NDIR). For measuring NO_2, nondispersive ultraviolet (NDUV) is preferred.

Recently, however, a considerable amount of data has been gathered using chemiluminescent techniques to measure NO_x concentrations. In fact, most NO_x measurements are currently made using chemiluminescent monitors. NO_x measurements made by NDIR, NDUV, and chemiluminescent methods are believed to be reasonably accurate. The problems involved in measuring NO_x for gas turbines are not significantly more difficult than for other combustion processes.

Sulfur Oxides

Sulfur oxide concentrations in jet engine exhaust streams are in general far lower than the most stringent current Air Pollution Control District regulations. Based on maximum fuel sulfur content allowed by the fuel specifications, the greatest fuel/air ratio (in maximum afterburner mode), and no dilution by augmenter air, the maximum possible SO_2 concentration in the engine exhaust is on the order of 100 ppm by volume, This theoretical value is a factor of three less than the most stringent current SO_2 standards (San Diego APCD).

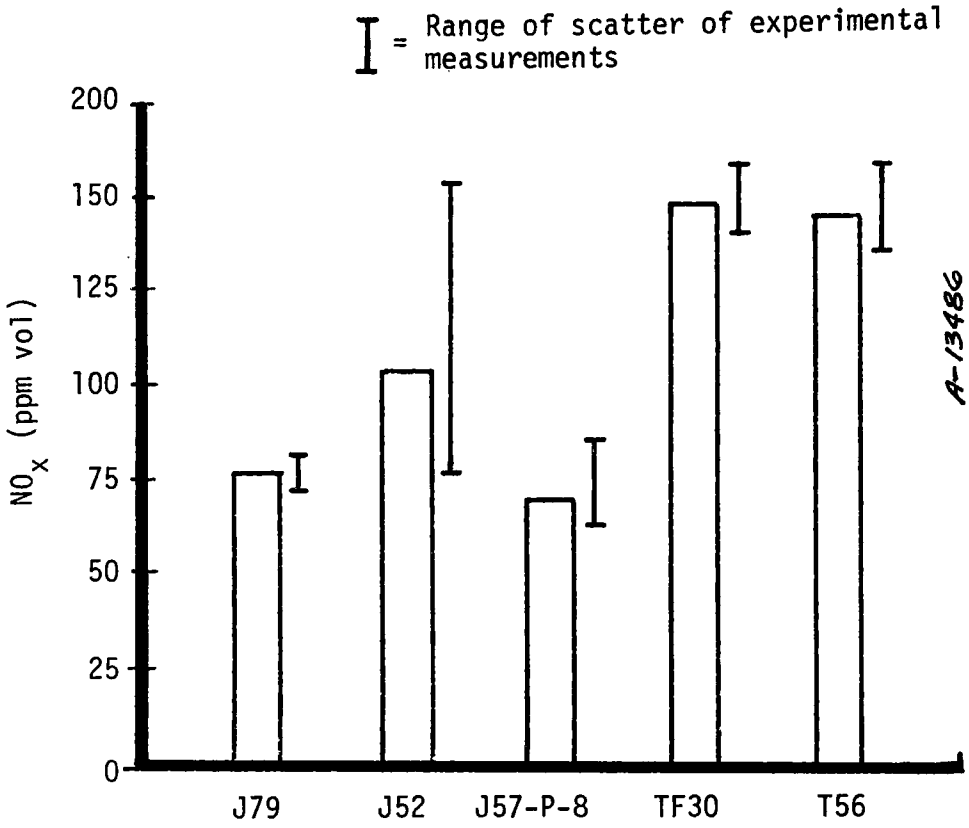

Figure 8. NO_x emissions from jet engines (Reference 22).

Measurements of SO_x at the top of test cell stacks have been made. Concentration levels far below the theoretical tailpipe concentrations have always been recorded. Figure 9 compares actual stack measurements made at Albany Naval Air Station with theoretical tailpipe concentrations and several APCD limits. The stack measurements are low because of the dilution by augmentation air, and also because the fuel had a lower sulfur content than specifications required.

Sulfur oxide concentrations in gas turbine exhaust streams are usually determined by standard wet-chemical methods. A recent measurement (Reference 31) indicates that the ratio of SO_3 to SO_2 in aircraft turbine engine exhausts was 0.138.

The conclusions to be drawn regarding SO_x emissions by jet engine test cells seem clear: (1) because of the very clean fuel used, SO_x concentrations are well below regulatory requirements; and (2) measurement methods are well developed and reasonably accurate.

Unburned Hydrocarbons

Unburned hydrocarbons (UHC) are emitted from jet engines as a result of incomplete combustion. The UHC include gases and condensible vapors. Jet engines usually emit the highest concentration of UHC at idle, although the maximum amounts (lb/hr) are emitted in afterburner mode. Figure 10 shows UHC levels measured at the tailpipe of several engines (Reference 22) at idle. The engines are either in compliance or marginally in violation of Bay Area Air Pollution Control District (BAAPCD) standards, except for the J57. At all engine power settings above idle, UHC concentration falls to insignificant levels (Reference 19).

Unburned hydrocarbon emissions are typically measured by flame ionization detectors. Both condensible and noncondensible hydrocarbons

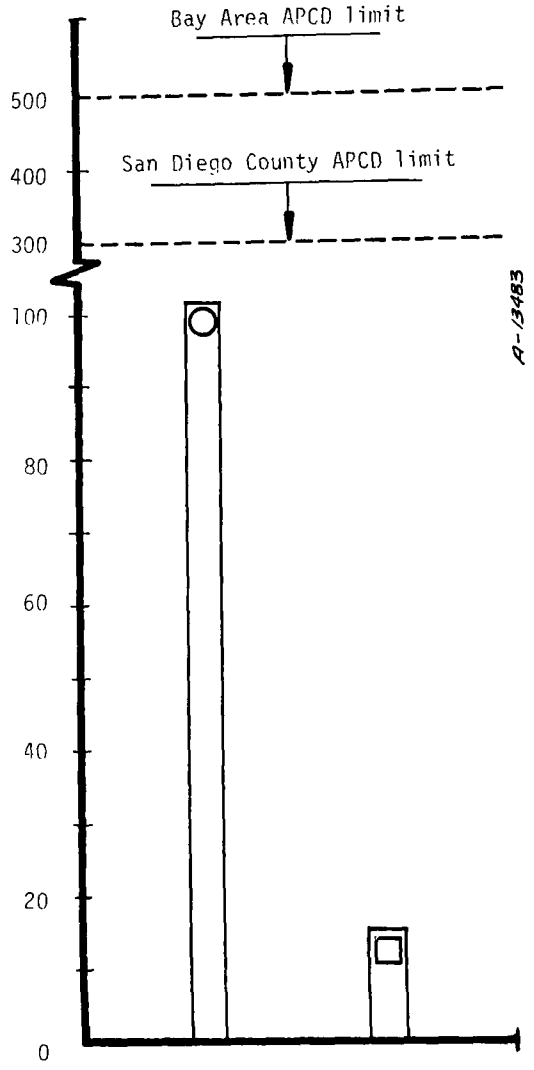

○ Maximum SO_2 in gas turbine engine exhaust based on maximum specification sulfur content of fuel and maximum fuel/air ratio (afterburning)

□ SO_2 measured at stacks by Source Emissions Team at Albany Naval Air Station (J79 with afterburner)

Figure 9. Comparison of typical turbine engine exhaust gas SO_2 concentrations with various air pollution control district limits (Reference 22).

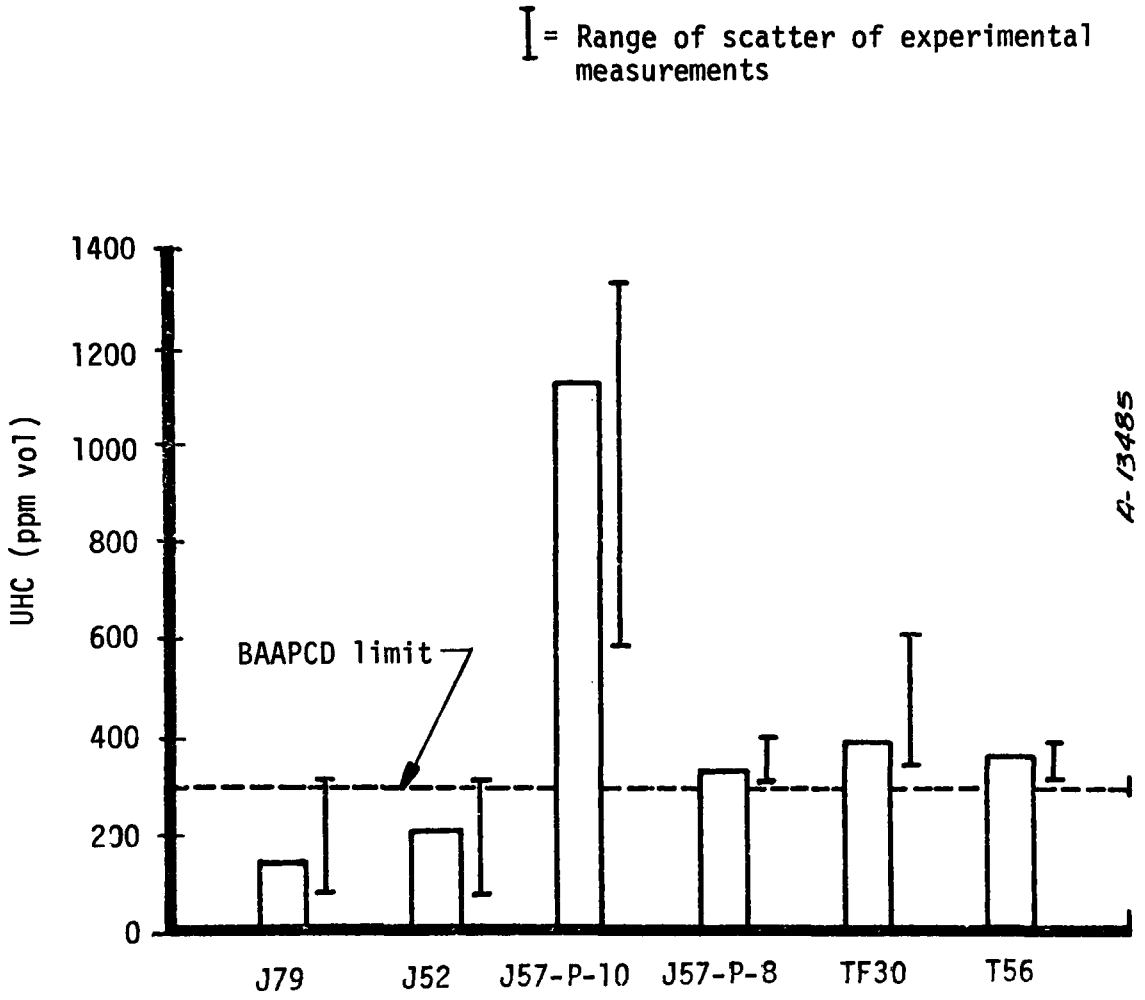

Figure 10. Unburned hydrocarbon (UHC) tailpipe emission levels of jet engines at idle (Reference 22).

are included in these emissions, a fact which complicates the measurement of particulates and (in some cases) of UHC.

In the case of particulate measurement, differences between the EPA and Los Angeles Air Pollution Control District (LAAPCD) particulate sampling trains (discussed in more detail below) can make significant differences in particulate concentrations, depending on whether condensible UHC is considered to be particulate. In the case of UHC itself, test cell operating procedures can significantly affect the readings obtained. For example, the water sprayed to cool exhaust gas can cause considerable condensation of UHC -- so much so that at idle power settings, more condensed UHC aerosol than solid particulate may be present. Some of this condensed material will be scrubbed out by the spray water, but most of it will be carried out the test cell stack. If sampling is being done at the cell stack, the condensed UHC may be measured as particulate, as total hydrocarbon, or not at all, depending on the way in which the sampling train is set up. Some of the UHC measurement discrepancies reported in the literature have been ascribed to this cause (Reference 25).

Carbon Monoxide

Jet engine CO emissions range from 2 to 15 $lb/10^6$ Btu for various engines at idle (Reference 19) and fall to insignificant values at higher power settings. CO concentrations are commonly measured by nondispersive infrared techniques. Unless scrubbers are used, concentrations measured at the tailpipe should be very much the same as stack concentrations (taking into account augmentation air). This is because almost no CO is converted to CO_2 at the low stack temperatures common in test cells.

5.3 PARTICULATE EMISSIONS

Mass emissions from jet engine test cells are much more difficult to measure accurately than visible or gaseous emissions. There are three main reasons why: (1) the nature of the particulate emitted; 2) the frequent confusion between condensed unburned hydrocarbons and solid particulate; and (3) the fact that particles emitted by jet engine change in size as they move away from the tailpipe. In addition to these fundamental problems, there are several operational difficulties that arise. Jet engine test cell stacks are often 20 feet in diameter or larger. Isokinetic sampling conditions are difficult to assure, because the presence of sound baffling grossly distorts the velocity profiles, setting up large velocity gradients and even backflows. Because of these difficulties particulate emission data tend to be incomplete.

Nature of Jet Engine Particulate

The particles emitted by jet engines are about 95 percent carbon by weight, and 5 percent oxygen and hydrogen (Reference 32). These carbon particles, which rapidly grow into soot in the tailpipe region, oxidize completely at the high temperatures downstream of the tailpipe unless quenching occurs. In turbine systems, the formation of very large soot particles is prevented by the vigorous mixing that occurs. In gas turbine burners, back mixing to recirculate combustion products with unburned liquid droplets in the primary zone is deliberately induced. Quenching occurs because combustor walls, turbine blades, and other engine internals are cooled with excess air. Any soot particles which come into contact with these cooled engine parts are quenched immediately.

Measuring the size of particles emitted by jet engines is complicated by several factors (References 33, 34, 12). At the tailpipe, as has

been stated, most of the particulate is in the form of soot. Further away from the engine, however, particles composed of condensible hydrocarbons begin to become significant, particularly at low power settings. The soot particles are substantially submicron (on both a number and a mass basis) at the engine tailpipe, and grow slowly by agglomeration as they move away from the engine. By contrast, the condensed hdyrocarbon particulate rapidly agglomerates into particles on the order of 10 microns in diameter (Reference 19). At high power settings, however, the exhaust stream remains hot enough so that condensible hydrocarbon aerosols do not form.

The size of the particles emitted by jet engines has not been fully established. Collecting and characterizing these particles under the extreme conditions in the engine exhaust is a difficult task. Tests carried out to date report average particle diameters of 0.02 to 0.06 micron, with some instances of particles with diameters up to 0.12 micron (on a number median basis). On a mass basis, particles are reported to average between 0.2 to 0.4 micron in diameter.

Electron photomicrography shows that soot particles from jet engines are more or less spherical. Usually several particles are grouped to form a chain. This agglomeration is probably the main reason for the growth in size observed as soot particles move away from the engine. Table 5 shows, for a J57 engine, the average size of soot particles at varying distances from the engine tailpipe.

There is at present very litte information about size distributions of the aerosol produced by condensation of hydrocarbon vapor.

TABLE 5. PARTICULATE SIZE DISTRIBUTION FROM J57 JET ENGINE (Reference 35)

Downstream Location from Nozzle in Nozzle Outlet Diameters	Engine Power	Geometric Mean Diameter, μm	Standard Deviation Mean in.
0	Approach	–	–
	75% Normal	0.053	1.63
	Cruise	0.052	1.46
2-1/2	Approach	0.084	1.33
	75% Normal	0.084	1.40
	Cruise	0.076	1.51
10	Approach	0.096	1.38
	75% Normal	–	–
	Cruise	0.13	1.40

Sampling Methods

The particulate emitted by jet engines has been sampled mainly at three locations in test cells. Some data has been obtained at the engine tailpipe or a few nozzle diameters downstream, where temperatures, vibration levels, and thrust loads are very high. Because gas velocities are also extremely high here, isokinetic sampling is difficult. Most sampling at the tailpipe has been done at a fixed location and a single sampling flowrate. A Method 5 sampler capable of isokinetic sampling at supersonic velocities with full traversing capability has recently been developed by the Aerotherm Division of Acurex Corporation with support from the Naval Aircraft Environmental Support Office and the Air Force Civil Engineering Center. This sampling instrumentation should soon provide much better particulate data than now exists.

Sampling conditions are much better 15 to 20 feet away from the engine, near the end of the augmenter tube. The augmentation air is by this point well mixed with the engine exhaust stream; the combined gas stream is considerably cooler and is moving more slowly. Most of the particulate emission data that have been reported were collected under these conditions.

Measurements made 15 to 20 feet from the engine tell more about engine emissions than test cell emissions, for two main reasons. First, the cell is almost always run dry (without exhaust cooling spray water) when sampling is done at the augmenter, so that the water spray does not affect particulate concentration. This means that no particulate is scrubbed out of the exhaust stream and there is no nucleation leading to particle growth or condensation of hydrocarbon vapor. Second, the exhaust gas is sampled before it passes through the stack with its acoustic

baffling. As a result, the wall losses and particle reentrainment which occur as gas passes through the stack are not taken into account.

The third location where sampling has been done is at the top of the test cell stack. Very few attempts have been made to sample particulate at this location. In fact, to our knowledge, no successful attempt has ever been made to obtain complete particulate emission data by multipoint isokinetic sampling at the exhaust plane of a Type A test cell. There have been a very limited number of samplings made at the exhaust plane of smaller cells. Reference 25 discusses a very complete sampling at the exhaust plane of a test cell with a small (6-foot diameter) stack, testing a J57 engine. Partial sampling of a large (700 sq. ft.) test cell stack has recently been reported (Reference 36).

A joint effort by the Environmental Protection Agency, the Coordinating Research Council, the U.S. Air Force and the U.S. Navy (Reference 25) to completely characterize the emissions from a small test cell illustrates some of the problems that can arise in particulate sampling from test cells. Eight sampling points were selected at the top of the 6-foot diameter stack. Based on the velocity profiles, this was probably not enough to assure a completely representative sampling.

Sampling for particulate was done using both the EPA sampling train and the LAAPCD train. The EPA train consists of a heated probe and filter, four impingers, an ice bath, and an exhaust gas metering system. The probe and filter are kept heated to 250°F to prevent condensation of water. As a result, most hydrocarbon vapor does not condense. The particulate catch is the total amount of material on the filter and in the probe. The system is designed so that only solid particulate and hydrocarbons condensing

above 250°F are captured on the filter and upstream of it. Hydrocarbons condensing between 70°F and 250°F are captured in the impingers.

The LAAPCD train consists of three impingers in a 70°F bath, followed by a filter thimble and an exhaust gas metering system. The tested gas is thus cooled before filtration, and condensible UHC knocked out. Unlike the EPA train, however, the condensible gaseous material collected in the LAAPCD train is included as particulate. Because of this difference, one would expect the particulate concentrations measured by the LAAPCD method to be consistently higher than those measured by the EPA method. In fact, just the opposite result was obtained during this testing program. One possible cause for this anomalous result is that the EPA matted filter is highly efficient and may exceed the capability of the LAAPCD thimble. Generally, however, data reported in the literature for test cell sampling shows that the LAAPCD train does give higher particulate mass loadings than the EPA train, as expected.

This test result shows that condensible hydrocarbons can have a significant effect on particulate emissions measurement. It also shows that confusing and contradictory results can be obtained even by experienced and knowledgeable sampling crews following standard practices.

Particulate Emissions Data

Three kinds of particulate emissions data are obtained from jet engine test cells: tailpipe, uncontrolled stack, and controlled stack emission measurements.

Tailpipe data are defined as measurements taken at or immediately downstream of the engine exhaust nozzle. Because of the extremely high gas velocities, temperatures and pressures existing in this region, measurement of particulate loadings and size distributions are difficult to

obtain. Those particulate data that do exist are somewhat questionable, because it is doubtful that isokinetic conditions were maintained during sampling. Instrumentation is now being developed (see Sampling Methods, Section 5.3) which will soon allow accurate tailpipe particulate data to be obtained. Figure 11 shows representative tailpipe data for several engines tested at two different power settings. More complete tailpipe emission data will be presented in the report of Phase II of this study.

Uncontrolled stack data are very sparse, due mainly to the difficulty of accurately sampling the very large stacks common to test cells (see discussion in Section 5.3). Table 6 gives data obtained on a relatively small (6-ft diameter) metal stack in one of the few carefully performed sampling tests that have been conducted.

TABLE 6. COMPARISON OF ENGINE AND STACK PARTICULATE MEASUREMENT

Measurement Method	J57 Engine Power Setting	Particulate Concentration, Grains/DSCF	
		Engine Tailpipe	Stack Exit Plane
EPA sampling train	IDLE	0.041	0.009
	CRUISE	0.076	0.013
LAAPCD sampling train	IDLE	0.025	0.009
	CRUISE	0.016	0.012

Tailpipe data, which were obtained simultaneously with the stack data, are presented in Table 6 for comparison. Note that both measurement methods used (EPA and LAAPCD) show a considerable reduction in particulate mass loading from the engine to the stack. This is due to dilution by augmentation air, by expansion of the gas at the lower downstream pressure,

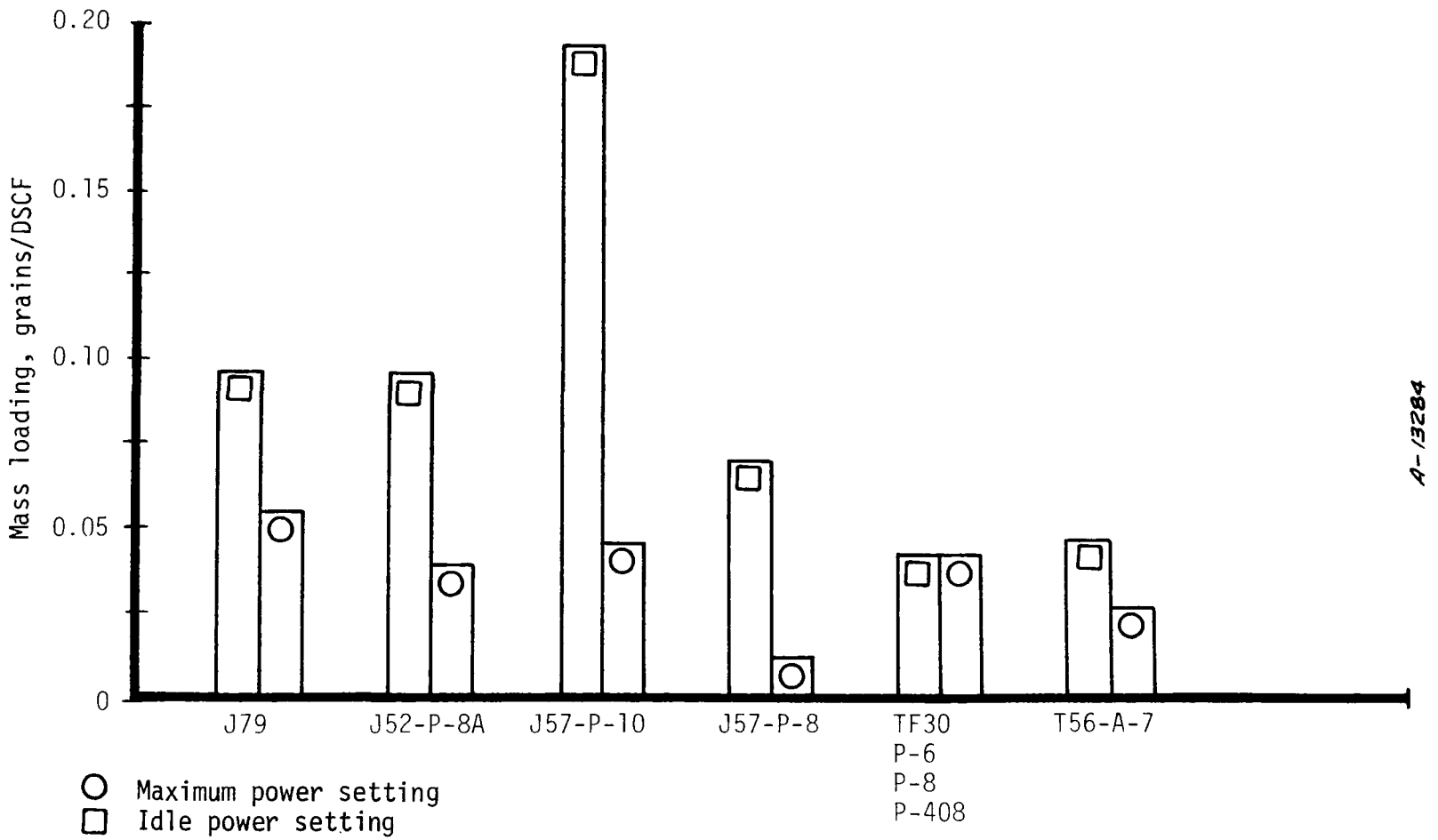

Figure 11. Particulate mass loading for jet engines, measured at the tailpipe (Reference 22).

and probably also to wall losses. A summary of available stack emission data will appear in the report of Phase II of this study.

Controlled stack data are nearly nonexistent. Only one full sized controlled test cell stack exists (the scrubber-equipped Black Point No. 1 cell at Jacksonville Naval Air Station), and only one attempt has been made to sample the cleaned exhaust gases. Various operational difficulties during sampling make the results obtained of very limited value; this test is discussed in detail in Section 6.2.1.

SECTION 6

TEST CELL EMISSION CONTROL TECHNOLOGY

The military services recognize emissions from jet engine test cells as a serious problem requiring investigation and solution. The U.S. Navy, which has responsibility for investigating control technology, has funded many research programs in this area. As a result of their research, a variety of methods for controlling jet engine test cell emissions have been suggested. Table 7 shows the different control technologies that have been proposed.

TABLE 7. JET ENGINE TEST CELL CONTROL MEASURES

Thermal Converters
Electrostatic Precipitators
Fuel Additives
Fuel Atomization Improvement
Nucleation Scrubbers
Spray Towers
Packed Towers
Cyclone Separators
High Spray (Ejector) Towers
Venturi Scrubbers
Wet Cyclones
Filters
Impingement Separators
Acoustic Precipitators
Magnetic Filters

The Navy has determined that the first five of these control technologies warrant experimental study. Most of the remaining methods have been briefly explored and then discarded because of obvious deficiencies. In this section, each of the five control technologies that have been evaluated is described in some detail. A description of the method, the current state of its development, and capital and operating cost estimates are presented. In addition, some of the less promising concepts are briefly described.

Control technologies are considered here mainly as retrofit devices for existing test cells. In view of this, any control device must be able to function within the operative parameters of the test cell to which it is added. The pressure drop of the control device, for example, is one of the most important considerations. The operational characteristics of the engine under test can be affected when back pressures exceed about 20-inch water (Reference 10). Current acoustical treatment of the exhaust stream causes a back pressure of about 10-inch water. This means that a control device fitted to the exhaust stack should not cause a pressure drop of greater than about 10 inches since a mechanical means of exhausting the test cell to overcome high control device pressure drops is very expensive due to the extremely high gas flowrates involved.

Any control device considered for jet engine test cells must be able to withstand the very high sound levels existing in the gas exhaust stream. Average sound levels at the augmenter range from 170 dB for a J57 up to 180 dB for a J75 (Reference 16). The reinforced concrete walls of test cells crack fairly frequently.

Water availability is an important consideration for some cleanup devices, particularly wet scrubbers. At many installations, the water

supply is limited. Any device which uses large amounts of water would not be feasible at these locations. Nucleation scrubbers, for example, have the highest water usage of the cleanup devices considered here. Even though the scrubber packing irrigation water can be continuously cleaned and recycled, a good deal of water is lost in the quench spray system. Nucleation scrubbers must saturate the exhaust gas downstream of the augmenter in order to produce the nucleation and particle growth necessary for particle collection. The amount of water evaporated to saturate the exhaust gas varies with engine power setting, but in general will always be greater than that required for an uncontrolled cell.

The physical dimensions of a cleanup device and its support equipment are also important for retrofit installation. Test cells are commonly built side-by-side in pairs sharing control and ready areas. In some cases (for example at Tinker AFB) many cells are positioned in a row with minimal clearance betweeen them. A control device which takes up a lot of room on either side of the cell stack will probably not be suitable for pairs or groups of cells. Similarly, the space required for support systems could become a factor. In some locations, the ground space necessary for the cooling tower, pumping station, and water cleanup plant associated with nucleation scrubbers, for example, may be unavailable.

These restrictions and limitations, combined with the diversity in test cell design noted earlier, make a standard cleanup device for all test cells impractical (with the obvious exception of those methods such as fuel additives that require no alteration of the test cell structure). Different cleanup technologies may be required in different locations because of water availability, fuel cost, electricity cost, physical space availability, and local air pollution control regulations.

6.1 ELECTROSTATIC PRECIPITATOR

The electrostatic precipitator (ESP) is an obvious choice for a test cell cleaning device. It is efficient in collecting the micron- and submicron-sized particles that make up the test cell exhaust plume. It is capable of operating at elevated temperatures and is a well developed, proven method in current use in a number of diverse applications. ESP's are also low pressure drop devices, an important consideration for the test cell application.

Particle collection in an ESP is accomplished by allowing the particulate-laden gas to pass close to a wire, point, or sharp edge which is raised to a high enough electrical potential in relation to other nearby parts of the apparatus to continuously ionize the gas near the wire. The ions thus created rapidly sweep through the gas to be cleaned. Particles present attract and then adsorb the ions, acquiring an electrostatic charge. In a single-stage precipitator, the charged particles are carried to nearby low potential surfaces by the field which exists between the ion source and the collecting surfaces. In a two-stage ESP, the particles are charged as described and then collected downstream in a separate high-field region.

The efficiency of the ESP is limited by the ion flux density in the charging zone, the particle size, the magnitude of the field in the collecting zone, the distance a particle must travel to a collecting surface, the particle resistivity, and the residence time of a particle in both the charging and collecting zone. The designer has little control over charging and collecting fields. These are always the maximum values which can be attained without excessive sparkover. The performance of an ESP for a given gas stream is thus determined by the residence time of a particle in

the ESP, or by the gas velocity and available collection area for any specific precipitator.

In industrial applications, gas velocity commonly ranges between 3 and 15 ft/sec (Reference 8) with 8 ft/sec (500 ft/min) being considered a maximum for good practice in most applications. This low operating velocity is a drawback of test cell use. For a cell designed for 500,000 acfm (typical of a TF 30 engine with conventional augmenter), the required precipitator cross-sectional area to maintain a 500 ft/min gas velocity in the ESP would be 1000 ft^2. Providing this large an area is the main reason for the high cost of installing retrofit ESP's on test cells.

There are several peculiarities of test cell operation that constrain ESP design. The carbonaceous nature of the particulate makes fire a real danger if the precipitator is operated dry. This danger is increased by the inevitable sparking that occurs between high voltage elements in precipitators. In general, however, because the exhaust gases are usually cooled by water sprays at the augmenter, the gas leaving a test cell often contains liquid water in the form of entrained droplets and condensation.

This water creates several severe problems for the designer of an ESP for a test cell. First, the damp or wet particulates make a sticky paste that clings tenaciously to collecting surfaces. Some effective means of removing this material must be provided. Secondly, and more seriously, the carbonaceous particles, when dampened with water, make a very conductive paste. If conductive material is allowed to build up on insulating components inside the precipitator, arcing and system failure may occur. Some means of periodically cleaning all internal parts of an ESP designed for test cells is therefore necessary. Wet ESP's, that

operate with a continuous flow of water over the collection plates, may solve these problems. However, there is no present experience with wet ESP's on test cells.

6.1.1 ESP Experimental Apparatus

An experimental program to evaluate the performance of an electrostatic precipitator has been conducted at Jacksonville Naval Air Station by United Engineers and Constructors, Inc. A final report on the results of the program is due to be issued in March 1976.

The test cell which has been used for the ESP tests was Black Point No. 1 at Jacksonville Naval Air Rework Facility. This is the same test cell on which the prototype nucleation scrubber is mounted. As shown in Figure 12, a bypass port is provided in the back wall of the test cell. A 12 inch by 12 inch duct extends into the cell exhaust area, approximately coaxial with the augmenter. A venturi section immediately outside the cell is used to measure the gas flow through the experimental test setup. The gas stream is then expanded to 30 inches by 48 inches, the cross-section of the ESP. A 25-foot length of duct stabilizes the gas flow, at which point a sampling port is provided. After passing through the precipitator, the gas enters another section of straight duct, toward the end of which is another sampling port. The gas is then exhausted to the atmosphere.

The gas flow through the test duct is powered by the positive pressure in the test cell exhaust space. No auxiliary blowers are required, but note that the test duct expands from 12 inches by 12 inches at the gas takeoff to 30 inches by 40 inches at the ESP. This is because the gas must be slowed down for effective operation of the precipitator. For most of the tests that were made, the gas flowrate in the test section was about

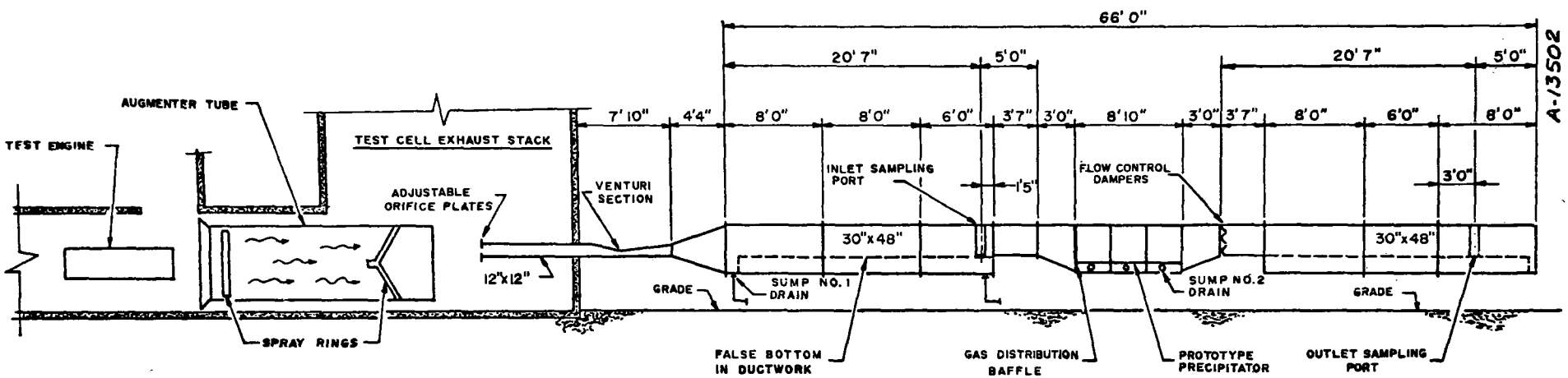

Figure 12. Electrostatic precipitator experimental setup — Black Point No. 1 test cell (Reference 9).

9000 scfm. Since gas flow in the test cell stack is about 600,000 scfm, the test apparatus was about 1/65 of full scale.

Figure 13 shows details of the ESP, which was provided by American Air Filter, Inc. As shown in the plan view, the precipitator is a double two-stage ESP. In effect, it is two identical units in series. This design increases the overall collection efficiency of the device (compared to a single ESP).

The dirty gas enters the precipitator through a distribution plate and flows past wash nozzles to the ionizing section. The ionizer section consists of a parallel array of tungsten wires, separated by grounded metal plates. The wires are raised to a potential (about 13,000 V) high enough to cause ionization of the air near the wires, and movement of air ions in the space between the wires and the grounded metal plates. Ions attach themselves to particles passing through this region of high-ion density, giving the particles an electrostatic charge.

The gas, carrying the charged particulate, then enters the collecting section. This is a parallel array of metal plates which are alternately grounded and raised to about 6000 volts. The electrical field between the plates in the collecting section causes the charged particles to migrate to one of the plates, where they are deposited.

After leaving the collecting region, the gas passes through an identical charge/collection section, where some of the particulate not collected in the first stage is trapped. The gas then leaves the precipitator.

After the ESP has been in operation for some period of time, the accumulated deposit on the collection plates and on the insulating components must be removed. The method used in the Jacksonville tests was

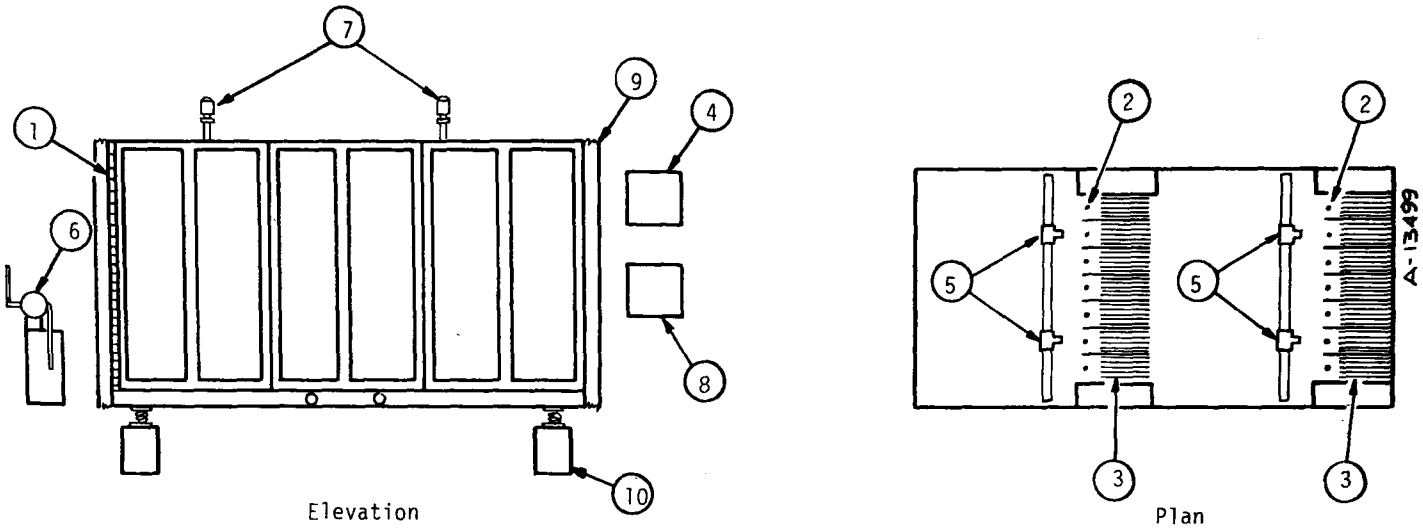

Legend

1. Gas distribution baffle
2. Ionizing section
3. Collecting section
4. Transformer-rectifier
5. Wash nozzles
6. Detergent pump
7. Solenoid valve
8. Wash control unit
9. Flexible duct connection
10. Support legs w/vibration isolators

Figure 13. Electrostatic precipitator test unit (Reference 9).

to direct a high pressure spray of water and detergent at the interior parts of the ESP. Wash nozzles were premanently mounted inside the precipitator, and a fully automatic sequencer performed the washdown. The manufacturer of the ESP recommended washdown every 8 hours. Somewhat more frequent cleaning was found to be desirable.

6.1.2 Experimental Results

A fairly extensive series of tests of the scale model ESP were performed at Jacksonville. Sampling for particulate was done using Method 5 procedures at the ports marked "inlet sampling port" and "outlet sampling port" on Figure 12.

Collection efficiency varied considerably from one test to another. ESP efficiencies ranged from over 95 percent in some cases to very low or even negative values in others. To add to the confusion, two different types of efficiency data were collected during evaluation tests of the scale model ESP. The manufacturers of the ESP (American Air Filter Company) performed single point isokinetic sampling measurements immediately upstream and downstream of the ESP. Their method measured dry particulate only; typically, efficiencies between 80 and 95 percent were recorded.

Another series of efficiency measurements was made by Jacksonville NARF personnel, using EPA Method 5. For these tests, particulate was determined by combining the filter catch with the impinger catch. Condensibles were thus defined as particulate. The Method 5 tests used a 20-point sampling grid at the inlet and outlet of the unit. An average particulate removed by the ESP of 59 percent was measured for all of the Method 5 determinations.

Comparison of the efficiency results obtained with the AAF method and EPA Method 5 is not really meaningful, since dry particulate was being

measured in the first case, and dry particulate plus condensibles in the second. Also, the AAF tests were done at a single point, rather than over a grid.

Finally, Jacksonville NARF personnel believe that inability to maintain constant engine loads during the long times required for Method 5 sampling may have affected those data. For purposes of discussion, the EPA Method 5 results will be used, since their data were obtained using equipment and procedures specified by most regulatory authorities.

Table 8 shows three measurements on a J79 engine. The operating personnel at Jacksonville consider these "good" data, representative of the overall performance of the system. The overall particulate removal efficiency of the ESP varied between about 52 percent and 65 percent for the data shown in Table 8.

There are several possible reasons for the low collection efficiencies in these tests. As indicated in Table 8, the gas velocities at the duct were 700 fpm. This means that at the ESP, they would have been about 500 fpm. This velocity is at the top of the range commonly used and may have contributed to low efficiency, especially for small particles. Smaller particles move toward the collection plates at a lower velocity than do large ones. As a result, small particles (such as those emitted by turbine engines) are more likely than large ones to pass uncollected through an ESP if the gas velocity is too high.

There were several operational problems noted during the evaluation of the ESP device. One was a recurring problem with shorting in the first ionizing section. Operating personnel believe that this problem was caused by excessive water droplets carried over from the exhaust cooling sprays, and that a mist eliminator upstream of the ESP would be necessary

TABLE 8. EMISSION DATA FROM THE ELECTROSTATIC PRECIPITATOR AT JACKSONVILLE NAVAL AIR STATION, BLACK POINT NO. 1 TEST CELL - J79 ENGINE

	Inlet	Outlet	Inlet	Outlet	Inlet	Outlet
Date	4-17	4-17	4-18 AM	4-18 AM	4-18 AM	4-18 AM
Scrubber water flow at #1 sump gal/min	9.66		9.89		9.61	
Vol. of dry gas sampled, scf	92.79	81.66	87.99	83.31	84.27	84.82
Stack flowrate, scfm, dry	9276.0	8149.4	8404.3	7621.5	8607.6	7920.2
Stack gas velocity, at stack conditions, fpm	763.8	665.8	703.8	620.5	698.0	698.3
Moisture, % by volume	15.75	15.15	17.13	14.89	16.66	15.39
Stack gas temp. degree F.	132	131	132	131	132	131
Isokinetic sampling rate, %	97.5	97.6	102.0	106.0	95.0	104.3
Particulate Results						
(a) Probe and filter catch grains/scf dry, x 10^{-3}	6.17	2.90	3.48	1.05	3.14	1.05
(b) Total catch grains/scf, dry, x 10^{-3}	7.30	3.54	3.92	1.20	3.21	1.27
(c) Particulate from #1 sump water sample grains/scf x 10^{-3}	5.41		5.64		5.14	
Particulate Removal Efficiency						
Based on air sample (a), %	53.0		69.8		66.6	
Based on air sample (b), %	51.5		64.9		60.4	
Based on total (air and water, a+c), %	74.9		88.5		87.3	
Based on total (air and water, b+c), %	72.1		86.8		84.8	
Entrained Water Removal, %	11.5		44.8		22.7	

for a full-scale unit. There was also a problem with the automatic washing system: an increase in water pressure over that originally provided was required for satisfactory operation. After proper water pressure was supplied, the cleaning system appeared to work satisfactorily. The cleaning cycle took about 20 minutes and appeared to remove deposited particulate from the ESP as it was designed to do. The precipitator could be run immediately after the cleaning cycle. If the ESP was allowed to stand unused for a long enough time to completely dry the collection plates, however, residual particles not removed by the automatic cleaning system would be reentrained into the gas stream and substantially lower the apparent efficiency in subsequent test runs.

6.1.3 Costs

United Engineers and Constructors, Inc., have estimated the capital and operating costs for retrofitting test cells with electrostatic precipitators capable of attaining performance levels similar to those reported here. The following is quoted from Reference 9:

> "Capital costs for a pollution abatement system incorporating the precipitator concept would be on the order of $850,000 for a 500,000 acfm system or $1,690,000 for a 1,200,000 acfm system based on a 500 fpm design velocity.
>
> Annual operating costs for a pollution abatement system incorporating the precipitator concept can be on the order of $32,000 for a 500,000 acfm system testing 500 J79 engines per year or $65,000 for a 1,200,000 acfm system testing 500 350-lb/sec engines per year."

These costs are based on complete installation of a double two-stage ESP system, including an automatic washing system and a pressure leaf

filler for removing particulate from the washwater. The operating costs include maintenance and electric power consumption. Operating personnel at Jacksonville NARF have stated that they expect much higher maintenance cost, based on their experience with the scale-model ESP, but they could not provide expected maintenance cost figures.

6.2 NUCLEATION SCRUBBER

At the present time, only one test cell cleanup method has been evaluated in full scale tests. This is the Teller Environmental Systems, Inc., (TESI), nucleation scrubber installed on the Black Point No. 1 test cell at the Jacksonville Naval Air Station. This scrubber consists of three parts: (1) an exhaust gas pretreatment section, in which the size of the particles is increased by nucleation of water vapor; (2) a proprietary packed bed scrubber section where the particulate is transferred to the scrubber water; and (3) a water cleanup and sludge removal system (not provided as part of the Jacksonville prototype scrubber facility).

A schematic diagram of the prototype system installed at Jacksonville is shown in Figure 14 (Reference 10). Exhaust gases leaving the engine are carried into the augmenter tube, where quench water is injected. This water changes the dew point of the gas to the proper conditions for nucleaction. Nucleation occurs in the augmenter tube and stack. The exhaust gas then passes through a packed bed scrubber section where irrigating water removes the particulate from the gas. Dirty scrubbing water is piped to a nearby river.

A special augmenter was designed and installed in the TESI system to keep the volume of exhaust gases to a minimum. With conventional augmenters, the ratio of entrained air to engine exhaust gas is about 2.5

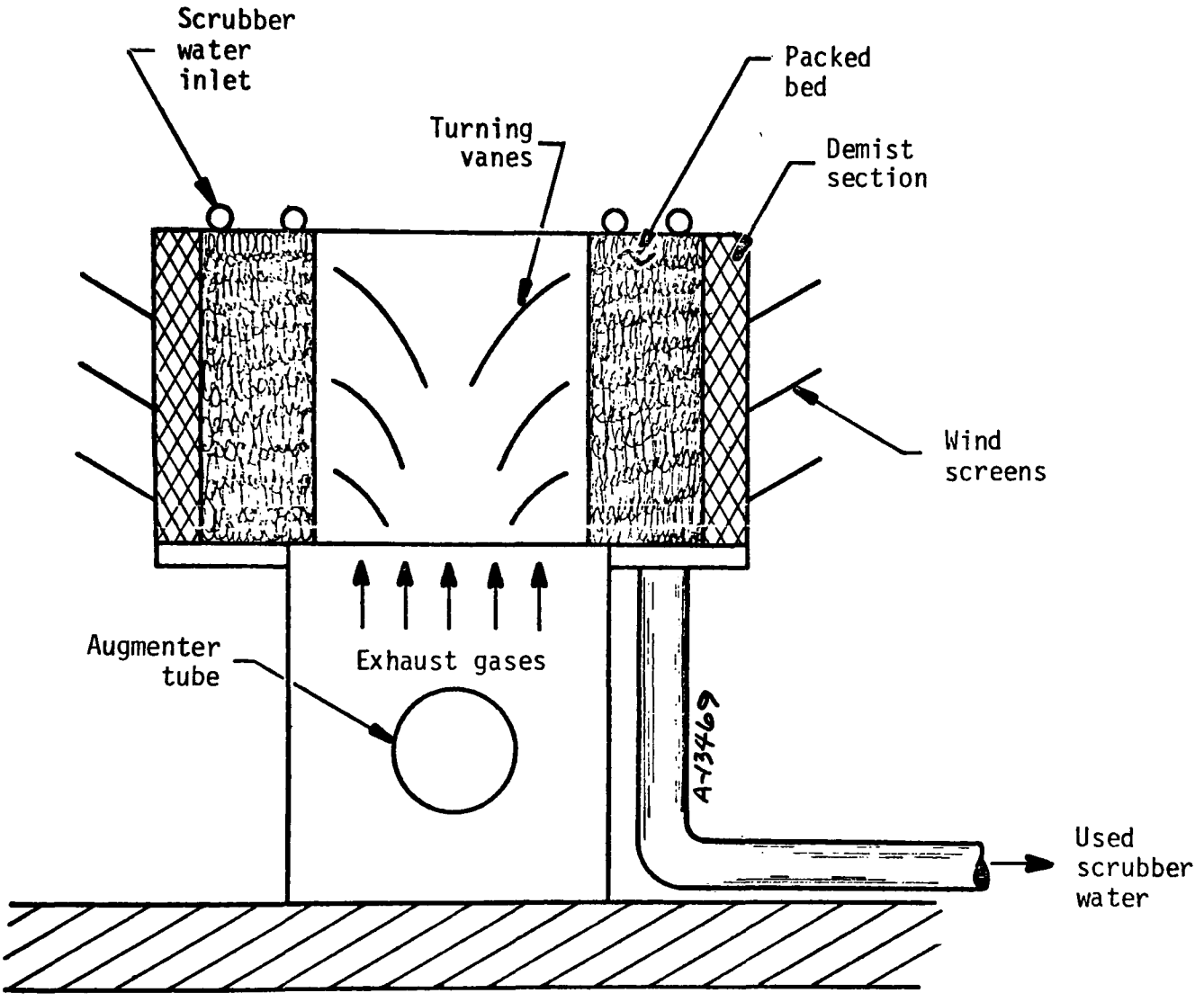

Figure 14. Nucleation scrubber schematic.

in afterburner mode. With the special augmenter (Figure 15), the flow is choked down to give a ratio of 1.0. This significantly reduces the flow-rate of gas to be cleaned, which means that the superficial scrubber area is also smaller. The TESI augmenter is also designed for efficient quenching of the exhaust gas stream.

The augmenter is designed with a converging throat and a vena contracta section with pentrating radial sprays and width large enough to permit recycle. It also has a diverging zone with circumferential sprays and an annulus between the diverging zone and the outside shell to permit recycle of gas and entrained water droplets to the vena contracta zone. The quantity of water injected and the engine exhaust and entrained air flows are such that the submicron particles emitted by the engine act as condensation nuclei for water vapor in the saturated or supersaturated regions downstream of the augmenter. In this way, particles grow to a size of 3 to 5 microns (Reference 11).

After leaving the augmenter, turning vanes direct the exhaust gases vertically up the cell stack. At the top of the stack, other turning vanes direct the gas horizontally into two packed scrubbing beds constructed on the periphery of the stack. Each bed is 30 feet long by 18 feet high by 6 feet thick. The inner 5-1/2 feet of each bed consist of 2-inch Tellerettes (a proprietary packing material), irrigated with face sprays and overhead distributors. The outer 9 inches is a demisting section. It is packed with 1-inch Tellerettes and is not irrigated.

The maximum irrigation rate of the two packed beds is 8300 gpm (used during operation of the J79 engine in the afterburner mode). This flow is reduced to 400 gpm in military mode, and only quench water is required below cruise levels. Because of the high cost of electricity to provide

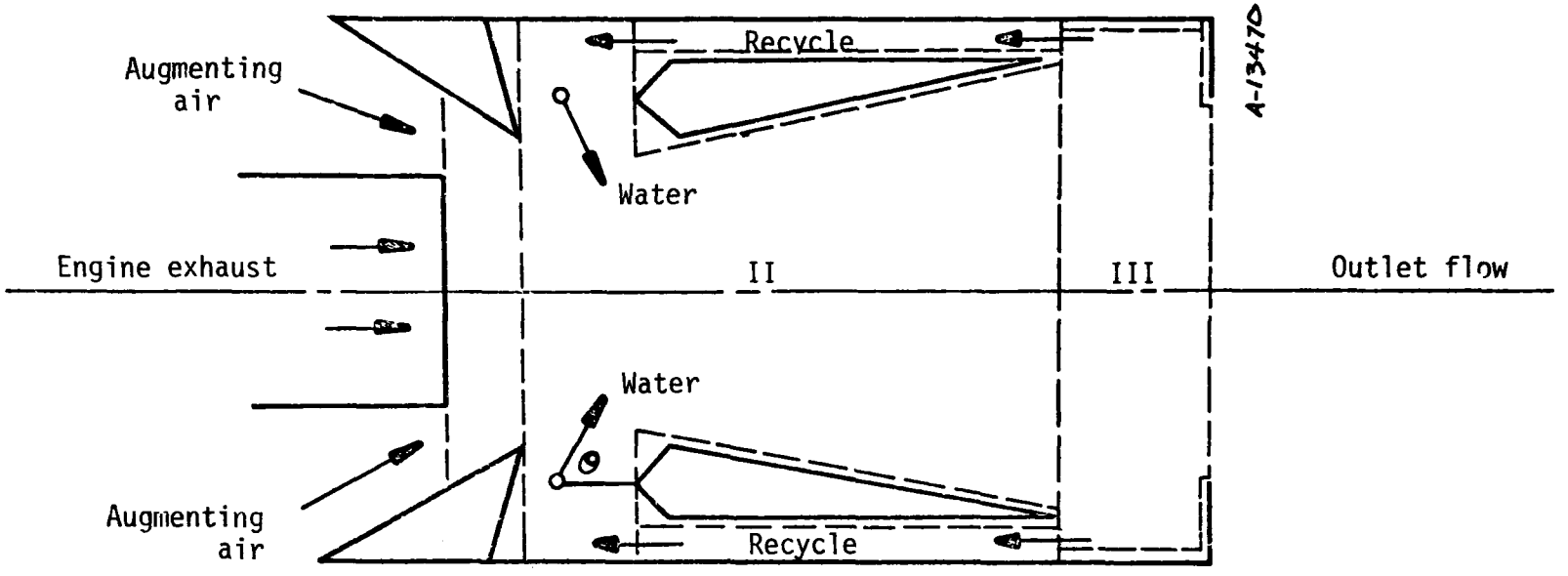

Figure 15. Teller Environmental Systems, Inc. augmenter.

scrubber irrigation water at maximum irrigation levels, it is important to reduce water flowrates as much as possible.

Unfortunately, accurate particulate emission data from the prototype scrubber is not available. Sampling at the face of the scrubber bed is a formidable task, and has only been attempted once. For this one test, multiple sampling nozzles were arranged in parallel at 12 test points on the outlet side of the paced bed. Isokinetic sampling conditions were not maintained. Instead, a constant nozzle suction velocity of 8 ft/sec was held. Under ideal conditions, exhaust gas exit velocities of 6 to 10 ft/sec were expected. In reality, however, the wind caused severe disturbances. Air sampled by the nozzles were carried through manifold pipes to a sampling train.

A sampling run consisted of the following sequence: (1) start flushing water flow; (2) engine start to idle; (3) engine runup to desired thrust; (4) take sample; (5) engine runup to blow out gases; (6) engine shutdown; (7) stop flushing water flow. During all this time the sampling nozzles were in place. Although the gas samples were drawn through the nozzles for only a part of this time, particulate material could accumulate on and in the nozzles and their manifold during the entire time. Since the material accumulated in the nozzles and manifold could not be distinguished from the rest of the sample, accumulation was added as an unwanted but unavoidable portion of the sample. In addition, a great deal of water was sprayed into the gas stream upstream of the scrubber and the intake nozzles. During the sampling, some of this water could be seen passing down the flexible tubing to the wet impinger, where it accumulated, contributing to the sample.

With these sorts of problems, the validity of the particulate sampling data obtained is questionable. The results are shown in Table 9.

TABLE 9. NUCLEATION SCRUBBER AT JACKSONVILLE NAVAL AIR STATION, EMISSION LEVELS FROM BLACK POINT NO. 1 TEST CELL

Engine	Mode	Particulate Emissions Grains/scf	Ringelmann
J79	Idle	0.0024	Less than 1/2
	Normal	0.0029	" " "
	Military	0.0024	" " "
TF30	Idle	0.0019	" " "
	Normal	0.0014	" " "
	Military	0.0018	" " "
J79	Idle	0.0052	" " "
	Normal	0.0029	" " "
	Military	0.0062	" " "
	Max. A/B	0.0033	" " "

Attempts were also made to determine the concentration of CO, SO_2 and hydrocarbons with the same sampling system used for particulate collection. Because of various equipment failures and analytical difficulties, reliable gaseous emission data were not obtained.

In spite of the lack of reliable quantitative data, independent observers were impressed by the performance of the TESI nucleation scrubber system. The following is quoted from Reference 10.

> "During a visit to Jacksonville Naval Air Station by the Contractor, a TF30 was tested in the cell. The test cell cleanup system was run under two modes of operation, scrubber water on and scrubber water off. One immediate effect of the presence of

the scrubber system regardless of the operating mode was the lowering of the noise level. In an adjacent cell, a TF411 engine (15,000 lbs thrust) was being run at military rating. The noise was such that even at a distance of over 500 feet conversation was almost impossible. When this engine was shut off and the TF30 run at military rating it was possible to converse within 50 feet of the test cell without difficulty.

The test cell was first operated with the scrubber water in use. During engine idle it was noticed that despite the 1100 gpm being injected into the augmenter tube and the 8000 gpm being showered down on the scrubber section, the exhaust (gas) was noticeably dirty. Yet the scrubber exhaust water was only slightly blackened by the collected particulate matter. Little, if any, water vapor appeared at the scrubber exhaust ports. Since one side of the scrubber section contained only the demisting section, this side tended to produce the water vapor mist. Considerable dirtied water was being exhausted from a tube placed in the rear of the augmenter tube during idle. This seemed to indicate that the injected water had condensed prior to exiting the augmenter tube.

As the engine power was increased to military rating, a dramatic difference in the exhaust was noticed. The scrubber exhaust became black with particulate matter. The water ceased flowing from the augmenter tube drain and air began being sucked into the rear of the augmenter tube through the drain. This last occurrence would indicate that the water vapor no longer was condensing in the augmenter tube but was being carried further downstream. The exhaust from the test cell became quite clean and heavily laden with water vapor. By standing under the plume, a slight mist could be felt. Nevertheless, it was mentioned that there had been no ill effects experienced from the mist at the base. Prior to installing the cleanup system, the vapor plume would extend hundreds of feet and the resulting mist and noise were objectionable. Despite the lack of the 5-1/2 feet packing on one side of the scrubber, the plume from both sides seemed to be equally dense and equally as long.

For the second phase of the test, the 800-gpm scrubber water was turned off with only the 1100 gpm of augmenter water being left on. At idle power the same phenomena of dirty exhaust gas and the slight wisps of water vapor were again observed. The scrubber exhaust water (the water vapor carried downstream from the augmenter tube and being condensed without benefit of scrubbing water) was much dirtier than observed earlier at idle when the scrubbing water was on, but the flow was less. The augmenter tube exhaust water exited through the drain was just as dirty to the naked eye as observed previously.

Lastly, the engine was increased to military rating. The scrubber exhaust behaved as before at military rating, producing a 100-foot plume of clean water mist. The augmenter tube drain behaved as before, ceasing flow and sucking air in. Only the scrubber exhaust water changed characteristics. It became dirty as before, but the flow increased from a light flow experienced under idle rating to a more moderate flow under military rating."

Table 10 presents a summary of these observations. Note that the performance of the scrubber was observed to be about the same with and without scrubber irrigation water. Personnel at Jacksonville NAS have also suggested that the amount of irrigation water and the thickness of the packing can probably be considerably reduced without lowering system performance. This, if confirmed, would have some effect on capital cost, and a major effect on operating costs.

Personnel from Acurex and EPA viewed the scrubber system in operation on February 4, 1976. A TF41 engine was being tested in Black Point No. 1, and a similar engine was being tested in a nearby cell, which was identical except for the scrubber. The scrubber irrigation water and quench water were turned on first. The engine was then started, held briefly at idle, and then moved up to the 90-percent power setting where it was held for about 5 minutes. A very heavy white plume was produced at the faces and top of the scrubber. The plume lasted for about 100 feet downwind in the very light winds prevailing. After the steam plume evaporated, no trace whatever of a pollutant cloud could be detected. A very rough visual estimate was made that perhaps 20 to 30 percent of the steam produced came from the top of the scrubber assembly (presumably through leaks) rather than through the faces of the scrubber beds. The color of the plume coming from the top was no darker than the plume coming from the faces.

After a few minutes of operation at 90-percent power setting, the engine was reduced to idle setting for about 5 minutes more. At idle, the velocity of the plume from the scrubber was markedly lower, but it looked about the same as the plume from the 90 percent power setting. A clean white plume persisted about 50 feet downwind, where the water evaporated

TABLE 10. OBSERVATIONS DURING TEST CELL CLEANUP SYSTEM TEST (Reference 10)

Scrubber Mode	Engine Mode	Test Cell Exhaust	Scrubber Water Exhaust	Augmenter Tube Water Exhaust
Scrubbing water on (8000 gpm)	Idle	Dirty mist	Slightly dirty	Dirty
		Water vapor wisps through unpacked sides	Heavy flow	Heavy flow
	Military	Clean cloud	Dirty	
		Water vapor plume about 100 ft long	Heavy flow	No flow, air being sucked in
Scrubber water off	Idle	Dirty mist	Slightly dirty	Dirty
		Water vapor wisps through unpacked sides	Light flow	Heavy flow
	Military	Clean cloud	Dirty	
		Water vapor plume about 100 ft long	Medium flow	No flow, air being sucked in

No trace of a residual pollutant plume could be observed. Relative humidity was very high, however, and this made steam plumes very dense and persistent. By the time the stream dissipated the plumes were greatly spread out. This may have contributed to our inability to detect a residual pollutant plume.

After the scrubber-equipped cell was shut down, a series of test were begun in the adjacent uncontrolled cell on a nominally identical TF41 engine. This provided an interesting opportunity to compare plume appearance directly. At idle, the plume from the uncontrolled cell was essentially invisible, with only a slight darkening apparent. At 100-percent power setting, a very definite dark plume was visible. Several Ringelmann readers present agreed that, although proper conditions for accurate opacity determination were not present, the plume opacity corresponded to approximately 20 percent. The excellent scrubber performance must therefore be weighed against the fact that a relatively clean engine was being tested. Jacksonville NARF personnel observed that the TF41 opacity of 20 percent at military power setting was consistent with past experience at the relatively small, close-coupled, metal Black Point cells. They said that if the same engine were to be tested in a longer concrete cell a few hundred yards away, the plume at military power would have an opacity of at least 40 percent.

Figures 16 and 17 show the Black Point No. 1 test cell and nucleation scrubber in operation. These pictures were taken in 1971, but represent the plume appearance we saw fairly accurately. Figure 16 also shows the ductwork extension out the back of the cell that was used to test the scale model scrubber and electrostatic precipitator.

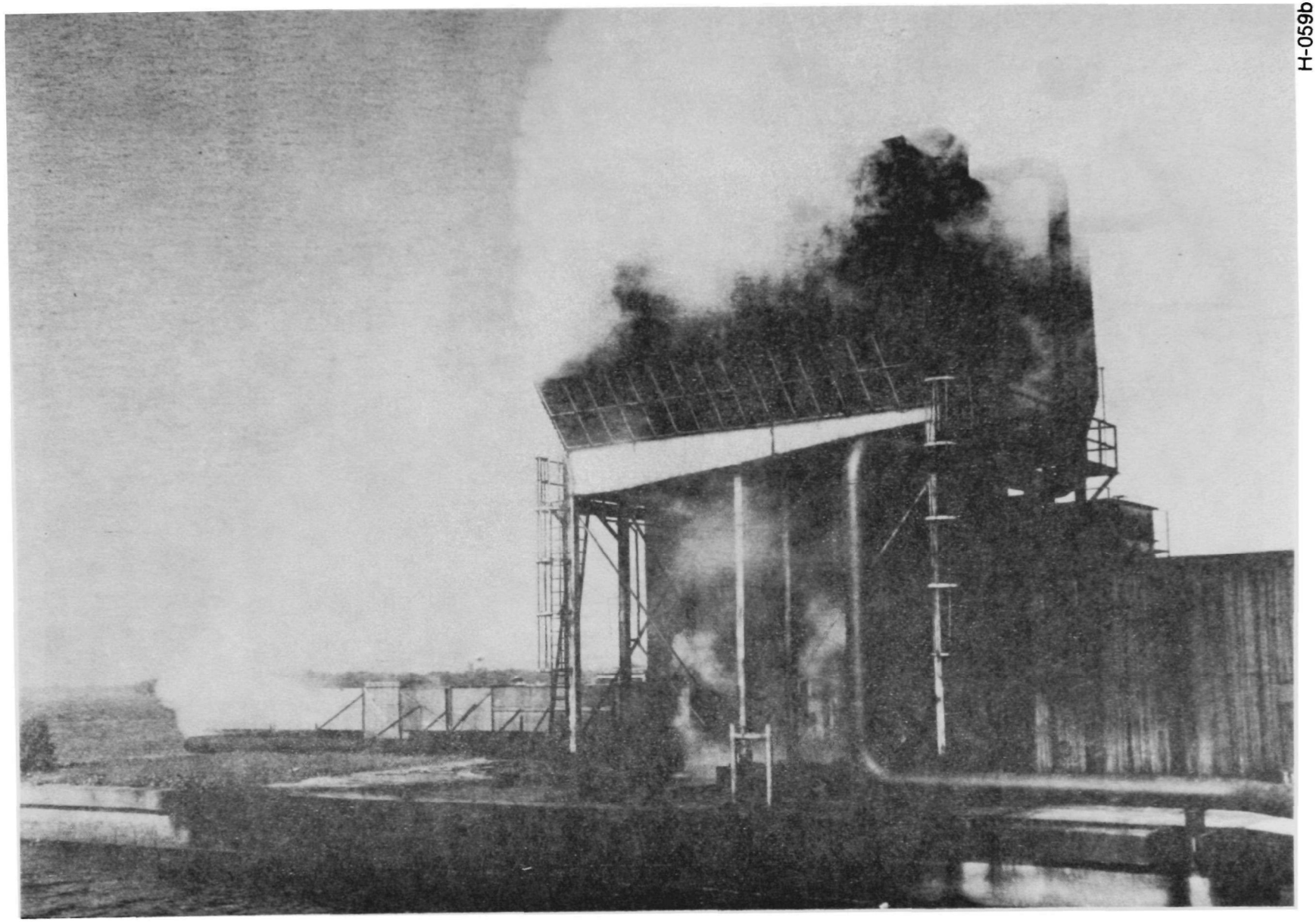

Figure 16. Nucleation scrubber at Jacksonville NAS.

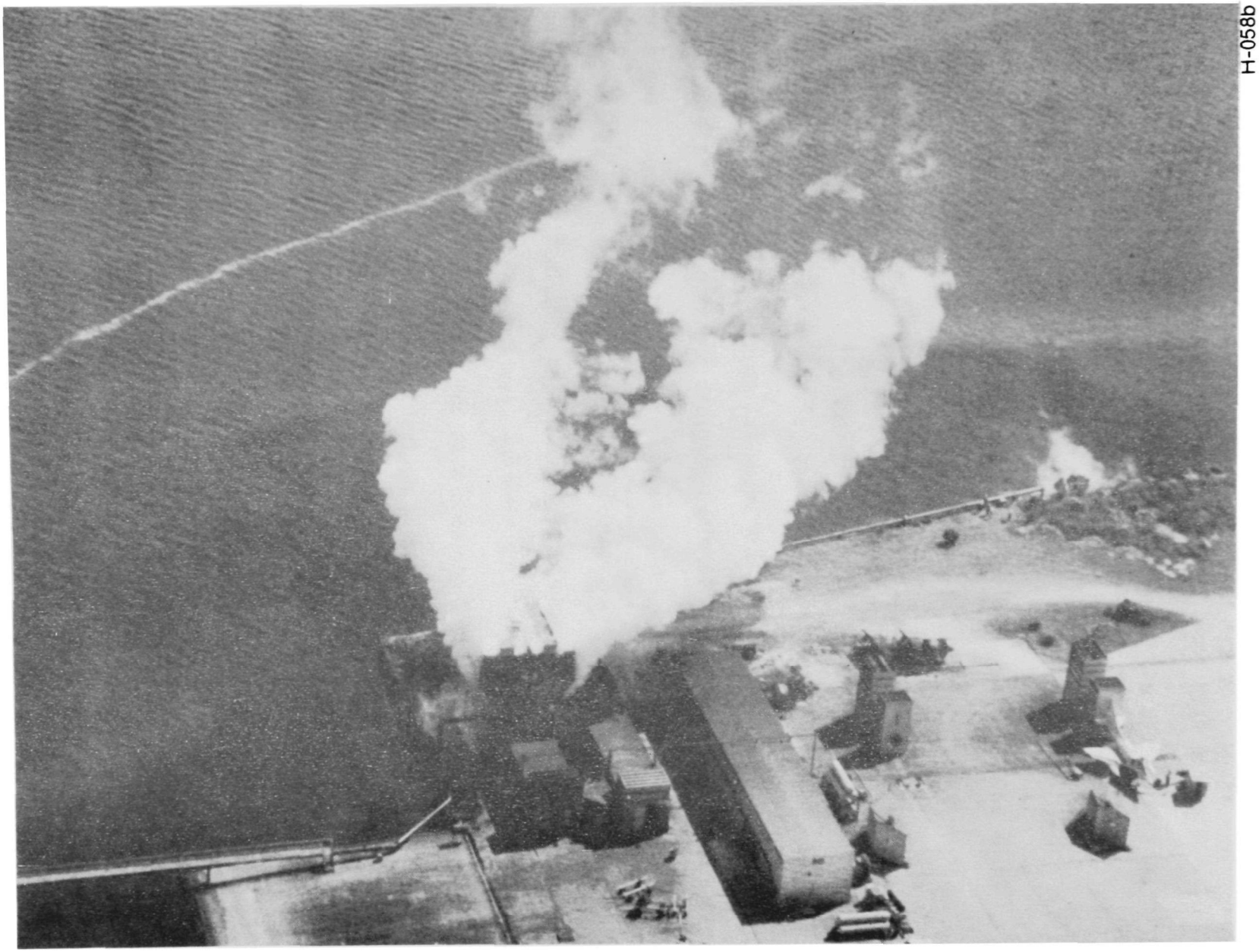

Figure 17. Aerial view of Jacksonville scrubber.

6.2.1 Scale Model Scrubber Tests

Even through good sampling data from the full-scale prototype scrubber is lacking, considerable information has been obtained on a 1/50 scale model known as the pilot scrubber, attached to the Black Point No. 1 test cell at Jacksonville NAS. Essentially the same ductwork was used for the pilot scrubber tests as was later used for the electrostatic model experiments. The differences were that for the scrubber tests the inlet duct size was 4 feet x 4 feet in cross section and gas flow measurement was achieved with an adjustable orifice. The ESP tests were conducted with a 30 inch x 48 inch inlet duct and a venturi upstream of the ESP. Figure 12 shows the ducts which led engine exhaust from the cell to the scrubber. Figure 18 (Reference 13) shows the pilot scrubber.

The pilot scrubber was designed expressly to overcome the sampling problems noted with the full-scale prototype scrubber. Gas velocities and scrubber bed thicknesses on the pilot scrubber were made similar to those on the full-scale prototype unit. Pilot model sampling procedures were evaluated by EPA representatives, and were determined to be satisfactory. It is therefore believed that the data obtained with the pilot scrubber are representative of actual nucleation scrubber performance.

In a sample run, an engine was set at a constant power level. Air flow through the pilot scrubber was set by adjusting the orifice at the entrance to the system ductwork. The flow of water in the augmenter and pilot scrubber were set and stabilized. Air sampling was done at the locations marked "inlet sampling port" and "outlet sampling port" on Figure 12. At each sampling port, air samples were taken at 25 locations specified by a 5 x 5 grid uniformly spaced within the 4 feet by 4 feet duct. Isokinetic sampling methods and train components were as required

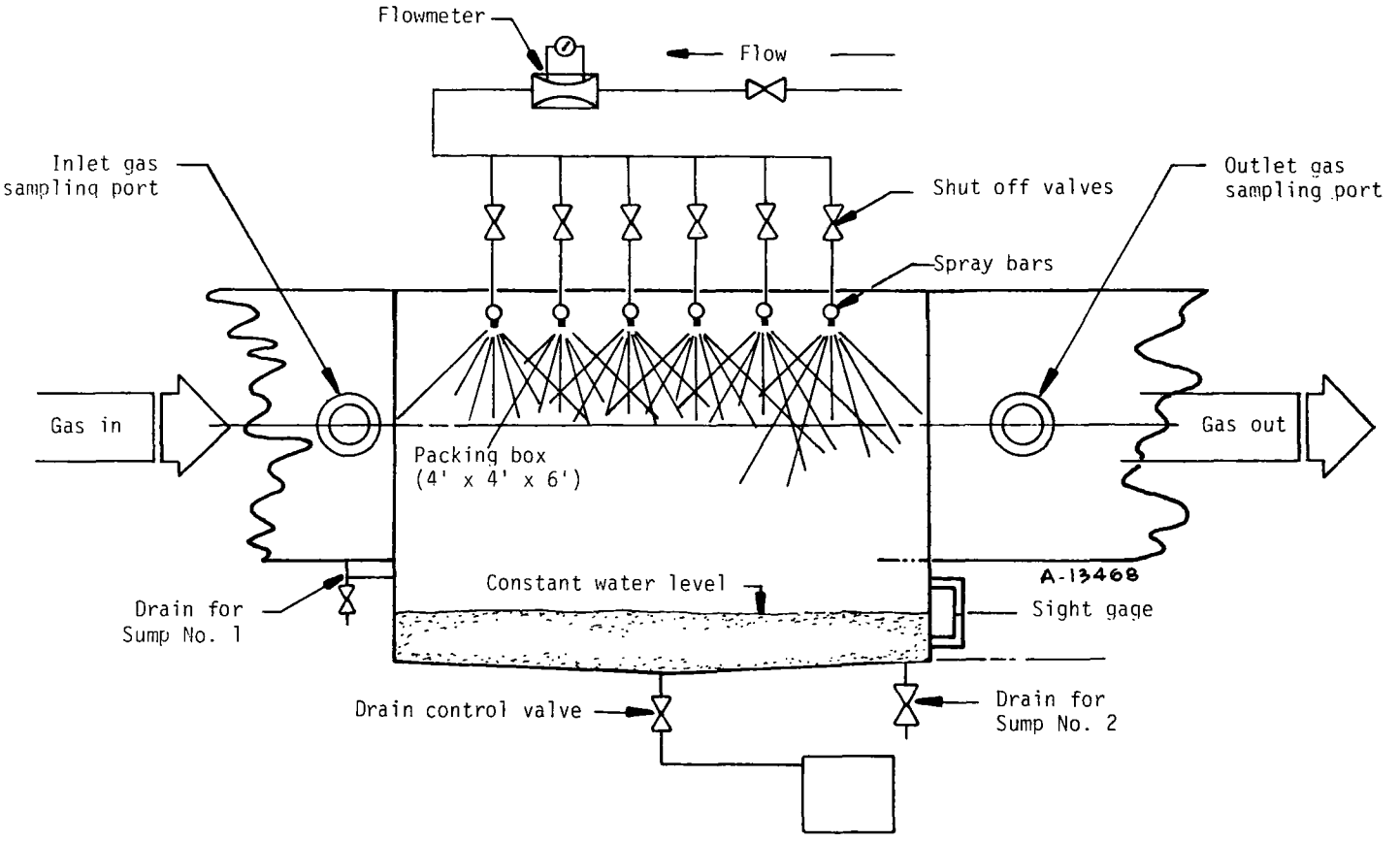

Figure 18. Pilot scrubber system on Black Point No. 1 test cell at the Jacksonville Naval Air Station.

for Method 5. Air was sampled before and after the scrubber section. In addition, water samples were taken at the locations marked "Sump No. 1" and "Sump No. 2" on Figure 18. The sample from the No. 1 sump gave the concentration of particulate which was removed by the action of the water sprayed into the exhaust stream at the engine tailpipe, by particle impingement on the augmenter tube and all stack internals, and by the water condensation and fallout that occured between the tail pipe and the scrubber face.

Part of the difficulty in assessing the performance of any scrubber system requiring exhaust gas quenching is that the augmenter with its water spray system removes particulate independently of the packed scrubber bed. Therefore, while the overall system may be highly efficient in removing particulate, the scrubber section (as measured by air sampling) may be much less effective. The relative particle-removing efficiency of a fully quenching system, compared to a conventional augmenter with water spray cooling is unknown. In the data reported in Reference 13, and repeated here, both scrubber efficiencies (based on air sampling) and overall efficiencies (including particulate collected in the No. 1 sump) are presented.

Table 11 shows a representative set of data obtained with the pilot scrubber system on three different days. Particulate removal efficiency of 51 to 62 percent for the packing section, and overall efficiency, including both packing and augmenter spray collection, of 77 to 81 percent were representative of the much larger number of data points given in Reference 13.

Among the parameters investigated in the pilot model scrubber tests were type of packing, effect of packing thickness, and effect of water

TABLE 11. TEST RESULTS ON PILOT SCRUBBER AT THE BLACK POINT NO. 1 TEST CELL AT JACKSONVILLE NAVAL AIR STATION, USING A J79 ENGINE (REFERENCE 13)

	Inlet	Outlet	Inlet	Outlet	Inlet	Outlet
Date	1-30	1-30	1-31	1-31	2-1 AM	2-1 AM
No. ft. of packing	3		3		3	
Engine operating condition	Normal Rating		Normal Rating		Normal Rating	
Flow at #1 Sump gal./min.	12.3		16.2		14.7	
Flow at #2 Sump gal./min.	.2		.5		75.0	
Vol. of dry gas sampled, SCF	73.04	62.75	91.46	85.15	91.89	75.01
Stack flowrate, SCFM, dry	6539.8	5448.0	8919.5	8075.4	9046.4	7510.6
Stack gas velocity, at stack conditions, f.p.m.	542.4	437.1	746.1	638.8	760.4	566.4
Moisture, % by volume	16.6	14.1	17.4	12.9	17.7	10.5
Stack gas temp. degree F.	129.6	126.8	130.2	127.6	131.0	115.4
Isokinetic sampling rate, %	104.4	107.7	95.9	98.60	95.0	93.4
Particulate Results						
(a) Probe and filter catch Grains/SCF, dry, x 10^{-3}	6.90	3.09	6.67	2.53	6.55	3.20
(b) Total catch grains/scf, dry, x 10^{-3}	7.27	3.41	6.85	2.68	7.06	3.74
(c) Particulates from #1 Sump water sample grains, scf, x 10^{-3}	10.69		9.33		9.30	
Particulate Removal Efficiency						
Based on air sample (a), %	55.2		62.0		51.2	
Based on air sample (b), %	53.1		60.9		47.0	
Based on total (air and water, a+c), %	82.4		84.2		79.8	
Based on total (air and water, b+c), %	81.0		83.5		77.2	
Entrained Water Removal, %	42.5		75.3		67.0	

irrigation rates over the packing. It was found that none of these variables, within the ranges tested, significantly affected the scrubber bed collection efficiency for particulate. These findings suggest that the full-scale prototype scrubber and the four new scrubber-equipped cells under construction at Jacksonville and Norfolk may be overdesigned. All were designed with thick packing beds and high scrubber water irrigation rates, which may not be necessary.

Gaseous emission measurements of the pilot model scrubber were conducted by personnel from the Aircraft Environmental Support Office, Naval Air Rework Facility, North Island, California. Measurements of carbon monoxide, carbon dioxide, nitric oxide and total nitrogen oxides were made at both the inlet and outlet sides of the scrubber. The effect of water flowrate and packing depth on gas concentrations was investigated. For all tests, the average change in the concentration of each of the gases from the inlet to the outlet sides of the scrubber varied from 0 to 5 percent. It was concluded that the scrubber had little or no effect on the removal of CO, CO_2, NO, and NO_x (Reference 14).

6.2.2 Proposed Scrubber Facilities

Based on the results obtained with the prototype scrubber on the Black Point No. 1 test cell, four new scrubber-equipped test cells are now under construction -- two at Jacksonville NAS and two at Norfolk NAS. These are very large cells, designed for engines in the 70,000-lb. thrust category, whereas typical Type A cells are designed for 20 to 25,000 lb. thrust engines. The cells themselves, therefore, and the associated scrubber systems are considerably larger than the Black Point No. 1 cell.

The new cells will be equipped with complete scrubber installations, including water cooling and water treatment systems that

allow closed-loop water recyle. Each cell scrubber bed will be supplied with 14,000 gpm of irrigation water, compared to 8,000 gpm maximum for the prototype scrubber. Initial engine testing at the new Jacksonville cells is scheduled for fall 1976, with full operation scheduled for December 1976. The Norfolk cells are approximately 1 year behind.

6.2.3 COSTS

Since a full scale prototype retrofit scrubber has been in operation for several years, and four new scrubber-fitted test cells are nearing completion, it might be thought that the cost of providing scrubbers for retrofitting existing test cells could be readily established. Unfortunately, this is not the case. We requested separate estimates from the Navy and a private contractor and found these to differ considerably. These differences existed despite the use of a uniform cost estimation basis through the stipulation of the following conditions:

- The scrubber was to be retrofitted to a Type A permanent test cell capable of testing engines of up to about 20,000-lb. thrust
- A complete facility was to be provided including scrubber, cooling tower, water cleanup plant, all site modifications, and installation of all equipment
- Costs of bringing utilities (water, electric power) to the test cell site were not to be included

Three cost estimates were received. An estimate prepared by the Naval Air Systems Command (Reference 15) in early 1975 is shown in Table 12. A separate estimate prepared in January 1976 by personnel at Naval Air Rework Facility, Jacksonville, is shown in Table 13. A very detailed cost proposal prepared by the original system contractor for the

TABLE 12. SCRUBBER RETROFIT COST ESTIMATE -- NAVAL AIR SYSTEMS COMMAND

Item	Cost
Packed scrubber	$ 515,000
Cooling tower basin	160,000
Cooling tower	250,000
Water system for irrigation and quench	280,000
Water treatment plant	160,000
Exhaust stack modifications	50,000
Electrical work	100,000
Total	$1,515,000

TABLE 13. SCRUBBER RETROFIT COST ESTIMATE -- JACKSONVILLE NARF

	Item	Cost	
1.	Cooling tower well	$ 31,138	
2.	Water treatment system	250,000	
3.	Scrubber and quench water system including cooling tower	731,000	
4.	Cooling tower and water treatment stairs	21,995	
5.	Water treatment building (miscellaneous)	1,560	
6.	Columns, beams, and miscellaneous for cooling tower pipe support	60,450	
7.	Cooling tower and water treatment building -- general construction work	251,515	
8.	Upper concrete work for scrubber enclosure including additional foundation	250,000	(due to pollution abatement). Prorated from a larger figure.
9.	Additional piles for building structure	40,000	(due to pollution abate ment). Prorated from a larger figure.
10.	Extra electrical work on outside and inside of cell	307,077	(due to pollution abatement). Prorated from a larger figure.
	Total	$1,944,735	

Jacksonville prototype scrubber, Teller Environmental Systems, Inc., is reproduced in Appendix A.

Direct comparison of these three cost estimates is difficult, because equipment costs have been grouped in different ways. Examination of the bottom line costs (Table 14) shows considerable variation, however. It is beyond the scope of this task to specify which, if any, of these estimates is "correct."

TABLE 14. COMPARISON OF SCRUBBER COST ESTIMATES

Estimate	Complete Cost One Cell Retrofit
Jacksonville NARF	$1,944,735
Naval Air Systems Command	1,515,000
Teller Environmental Systems, Inc.	705,650

Although some inconsistencies may be noted between the two Navy estimates, the main difference between their analyses and the TESI estimate reflects a difference in the quality of construction specified, particularly for supporting and ancillary structures. The Navy estimates are based on construction of reinforced concrete stack modifications and concrete structures to house the water pumping and water treatment equipment. The TESI estimate is based on provision of minimum construction consistent, in their view, with satisfactory equipment performance and reliability. A more detailed cost breakdown and analysis will appear in the Final Report to Phase II of this study.

An estimate for annual maintenance and operating costs has been made by Naval Air Systems Command (Reference 15). Based on two engine

tests per day, 250 days per year, annual maintenance was estimated at $50,000 and annual operating costs for the scrubber and cleanup system were roughly estimated at $80,000 (operating costs will vary with type of engine and length of tests). The electrical power cost, which is the major nonlabor operating cost, is $18,400 per year, based on 300 hp pump capacity, two tests per day, 250 days per year, and $0.035 per kw-hr (the cost of power at Jacksonville NAS). This assumes maximum water flow at all times. In fact, maximum water flow is used only at afterburner engine settings, which constitute a very small fraction of test hours. Also, as noted previously, there is reason to believe that the water flowrates originally specified for the system can be reduced with no loss of performance. These considerations indicate that actual power costs will be less than $18,000 per year.

6.3 FUEL ATOMIZATION

The fuel atomization improvement concept for reducing jet engine emissions involves attempts to introduce fuel into the engine in a more highly atomized state than is presently the case. The premise is that this finer atomization would bring about more efficient combustion and, hence, reduced emissions. This concept has been experimentally evaluated in two distinct forms -- methane absorption and water or alcohol emulsion. Both programs have been sponsored by the Naval Air Engineering Center, Trenton, New Jersey.

6.3.1 Methane Absorption

A series of experiments has been conducted in which methane gas is dissolved in the fuel at high pressure. When the fuel stream is exposed to the low pressure and elevated temperature existing just downstream from the fuel nozzles, the methane is expected to flash out of solution and,

hence, aid in the atomization process. In fact, it was observed that the methane gas tended to slowly bubble out of solution when the pressure was reduced, rather than violently disrupting the liquid as had been anticipated. In a series of tests using a single burner, methane concentration was varied between 0 and 2 percent by weight in JP5 or Jet A fuels. Pollutant emissions monitored were NO, NO_x, UHC, CO, CO_2, and smoke number. No significant change in any of these emissions was observed when methane gas was added to the fuel.

6.3.2 Emulsions

In this concept, an emulsion of an immiscible liquid with the regular fuel is created. The liquid in the discontinuous phase (water or ethanol in the experiments conducted to date) is in the form of small globules which flash after the fuel stream leaves the nozzles. This vaporization of the volatile globules disrupts the fuel stream, leading to finer atomization and more complete combustion.

A series of combustion tests using a single burner indicated that the presence of water or alcohol droplets in the fuel stream can significantly affect the pollutant emission (Reference 3). A standard milk homogenizer was used to prepare emulsions of water or ethanol of 0 to 10 percent by volume in JP5. Table 15 shows a representative sample of the results obtained. It should be noted that the energy value of the fuel is reduced proportionately to the water concentration.

These results were reasonably repeatable in similar tests. The results show that opacity and particulate concentration were significantly reduced, NO_x was slightly reduced, CO was nearly unaffected, and unburned hydrocarbon significantly increased. The data in Table 15 raise several

TABLE 15. EFFECT OF WATER/FUEL EMULSION ON COMBUSTION

Fuel	Water Conc.	NO_x ppm	UHC ppm	CO %	Smoke No.	Particulate Conc., gm/m^3
JP5	0%	66.5	2.5	0.038	33.6	5.55
JP5	10%	54.5	5.3	0.039	23.8	3.11

questions. The reduction in smoke number and particulate with the water emulsion are consistent with the proposed mechanism of better atomization and combustion, but the increase in unburned hydrocarbon is difficult to understand. It is also not clear whether the reduction in NO_x is due to the finer atomization, or simply due to the lower combustion temperature of a 10-percent water in JP5 fuel mixture compared to straight JP5.

There are two main problems inherent in the implementation of a fuel emulsion system for test cell use, even if further testing confirms the lower smoke numbers and particulate mass loadings. First, the specific gravity of a 10-percent water in JP5 emulsion is sufficiently different from straight JP5 that modification to the engine fuel control system may be required for some engines. Second, the engine thrust and other performance parameters are different for an emulsion than for JP5. Since the emulsion would be used only for test cell operation, careful calibration would be required so that an engine's performance in a cell using an emulsion could meaningfully be compared to that same engine's operation in the field on JP5.

Despite these problems, the emulsion concept is considered sufficiently promising that further investigation, probably involving full-scale engine tests, are now being planned.

6.4 THERMAL CONVERTER

The thermal converter, sometimes called an afterburner (not to be confused with the afterburner stage of a jet engine), raises the temperature of the exhaust stream with a secondary burner stage. The exhaust stream is maintained at an elevated temperature for the length of time needed to oxidize combustible components of the exhaust -- CO, hydrocarbons, and carbonaceous particulate to CO_2 and H_2O.

6.4.1 Thermal Converter Configuration for Test Cells

A thermal converter used in an engine test cell and installed in an in-line arrangement takes the general form illustrated in Figure 19. The high-velocity exhaust jet from the engine and the induced secondary air from the test cell both enter the cylindrical section called the mixer. In this section the two streams mix together to achieve as uniform a velocity profile as possible. The flow leaving the mixer is then diffused to the full cross-sectional area through a simple conical diffuser. This reduces the average velocity of the stream to an acceptable level. In the burner, the required amount of fuel is added and ignited, and the resulting flame is stabilized. Basically, the burner consists of a row of fuel spray bars followed by a row of vee-gutter flameholders.

The converter is located immediately downstream from the burner. It consists of a cylindrical section long enough to complete combustion of the added fuel and oxidation of the pollutants. The region identified as the combustion zone in Figure 19 represents the length required to complete combustion and attain a uniform temperature distribution. In the reaction zone, the temperature is maintained at a selected level for the length of time needed to achieve the required degree of pollutant conversion.

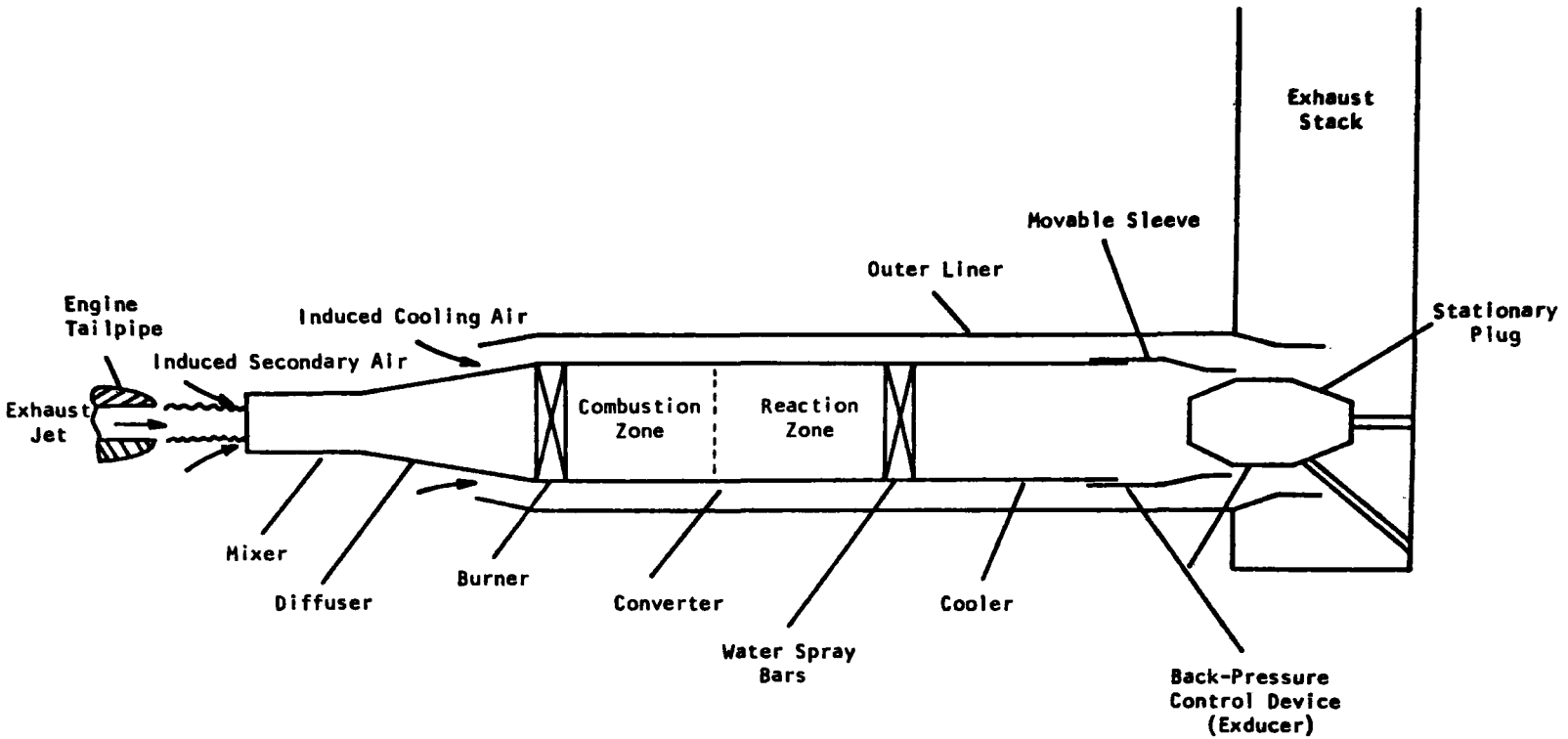

Figure 19. Schematic diagram of basic thermal converter configuration (Reference 6).

The flow from the converter then passes through a water spray system which consists of a row of pipes that inject water into the stream. In the cooler, the evaporated water reduces the gas temperature enough to protect the exhaust stack. Before entering the exhaust stack, the flow passes through a variable-area device located at the exit of the cooler. This consists of a stationary plug and a movable sleeve which can be used to adjust the exit flow area. This device serves two functions. Its primary function is to control the backpressure on the thermal converter. This makes it possible to adjust the amount of secondary induced air entering the converter to the desired level for any given engine. The backpressure control device also acts as an ejector. It induces cool ambient air to flow through the annulus between the outer liner and the thermal converter shell. This air provides the necessary convective cooling of the shell during operation.

As described in Reference 7, the operation of a thermal converter installed in a test cell would be virtually automatic. In starting a test sequence, the engine is first mounted on the test stand. The converter's adjustable-length mixer section is then locked into place as a predetermined distance from the engine's tailpipe. The backpressure control device is also locked into a predetermined setting. Both adjustments would be determined empirically and would be standard for a given engine model. For an engine being tested in the afterburning mode, the temperature of the exhaust is high enough to achieve oxidation of the pollutants without supplying additional fuel in the thermal converter, provided the amount of induced air is maintained at a low value. The burner system is designed so that upon command of the operator it can be retracted for protection just prior to ignition of the afterburner and replaced at the

conclusion of the afterburning sequence. In all other cases, the thermal converter would be operated automatically. Its control system would initiate and adjust the flow of fuel to the burner and water to the spray system to maintain the required performance.

6.4.2 Pollutant Conversion Performance

The emissions of gaseous pollutants and particulate from the thermal converter have not been adequately determined. However, sufficient testing has been done to show that the thermal converter is quite effective in reducing smoke number (that is, solid particulate is largely eliminated). It was also found that NO_x emission is not unduly increased. Specifically, data presented in Reference 6 show that a reduction in smoke number by a factor of 10 is readily achieved. While no measurement of particulate mass loading was made, the reduction in smoke number probably implies a substantial reduction in particulate emission. NO_x emission from the thermal converter was measured at about 1 lb/1000 lb. fuel burned. This is small compared to the NO_x output of most jet engines. The emissions of CO and UHC from the thermal converter were not adequately measured. But it seems unlikely that the converter would markedly increase the emission of these pollutants over emissions of the jet engine itself, and it may actually lower the concentration of CO and UHC.

Based on the information presented in References 6 and 7, the thermal converter would be effective in greatly reducing the opacity of the exhaust plume, would probably significantly lower particulate emissions, and would not greatly increase emission of gaseous pollutants.

6.4.3 Costs

Table 16 (Reference 6) shows the capital and operating costs for a thermal converter retrofit to a standard type A test cell. The capital cost is relatively low compared to other emission control methods considered. However, the operating costs are very high, due primarily to the high fuel consumption of the thermal converter burners. As a rough rule of thumb, it requires as much fuel to operate the thermal converter as it does to operate the engine being tested. It should also be noted that the costs in Table 16 are based on a fuel cost of $0.35/gal. It seems likely that this figure considerably underestimates fuel cost during the next 5 to 10 years. The availability of the additional fuel that would be required if thermal converters were in wide use is also a matter of concern.

6.5 FUEL ADDITIVES

Organometallic fuel additives used to modify the character of emissions from combustion processes have been studied for many years. Many additives, containing such metals as barium, manganese, iron, calcium, and various rare earths, are sold in the United States by a number of manufacturers. The primary market for these additives is conventional fixed power generation equipment, although there is a growing market in turbine-powered processes.

The emission modification produced by additives is apparently due to the catalytic activity of the metallic component, although the exact mechanisms have not been determined. Reductions in emissions of SO_3 (40 to 50 percent reduction with No. 5 fuel oil), NO_x (20 to 30 percent reduction with pulverized coal), and particulate (33 percent reduction with pulverized coal) have recently been reported for stationary power plants (Reference 1). An additional benefit from using fuel additives is reduction

TABLE 16. THERMAL CONVERTER COST ESTIMATE (Reference 6)

Capital Costs

Total Equipment [a]	$305,000
Assembly and Installation	88,000
Management	84,000
General Contractor Profit	14,000
Total Installed Cost	$491,000

Daily Operating Costs[b]

	J52	J57	TF30
Fuel	$2010 (5740 gal)	$2760 (7890 gal)	$4960 (14,100 gal)
Water	23 (188,000 gal)	25 (214,000 gal)	35 (289,000 gal)
Power	11 (500 kW-hr)	12 (520 kW-hr)	16 (610 kW-hr)
Purge Nitrogen	6 (270 scf)	8 (320 scf)	4 (160 scf)
Total Cost	$2050	$2805	$5015

[a]Includes material, fabrication, labor, pumps, and controls.

[b]Based on two 120-minute test cycles per day for each of the specified engines.

in plume opacity. This reduction is probably due mainly to a change in the particle size distribution, rather than to a reduction in particulate mass emissions.

The first time fuel additives were used to modify turbine aircraft engine emissions occurred in Southeast Asia during the 1960's. Some of the dirtier jet engines were at a disadvantage in combat situations because their trajectory could be followed easily. A manganese-containg additive,

CI-2 (Ethyl Corporation), was quite successful in reducing the opacity of the exhaust plume. For awhile, this additive was used extensively in combat operations. But several serious problems with CI-2 led to curtailment of its use. CI-2 is toxic in bulk form and is easily absorbed through the skin. Also the prolonged use of CI-2 damaged engines by causing a buildup of deposits on turbine blades and other engine parts. These deposits lead to hot spots and engine burnouts.

In a number of programs, the Naval Air Propulsion Test Center (NAPTC) has investigated usage of organometallic fuel additives to modify jet engine emissions. In one program, different additives were compared to determine their ability to reduce plume opacity. One engine (a J57-P8) was used for all of the tests. The test procedure was to gradually change the concentration of the additive being evaluated, while a Ringelmann reader observed the opacity of the test cell plume. The engine was operated at a power level known to give the maximum plume density. Since the Navy used proprietary compounds and information in conducting the tests, the complete ranking of the effectiveness of the various additive compounds was not released. The most effective compound (lowest percent metal in fuel to produce a Ringelmann No. 1 reading) was CI-2. Next in effectiveness, and only slightly below CI-2, was Fe55 (Araphahoe Chemical Company), usually referred to as ferrocene. Table 17 shows the additives evaluated and their manufacturers.

Because ferrocene is effective in reducing plume opacity, and because it is low in toxicity, a program to evaluate ferrocene in various engines has been under way for some time at the Naval Air Rework Facility at Alameda Naval Air Station. A final report on this work is now in the final stages of preparation at NAPTC. It is scheduled for completion in

TABLE 17. METALLIC FUEL ADDITIVES EVALUATED BY THE NAVAL AIR PROPULSION TEST CENTER[a]

Trade Name	Manufacturer
Smokeless #9	Ellis Chemical, Inc.
DGT-2	Apollo Chemical Co.
E/C 200	G&M International
Technol D	Oil Technology Corp.
Technol T	Oil Technology Corp.
Technol TT	Oil Technology Corp.
Fe55	Arapahoe Chemical Co.
RS 211242	Arapahoe Chemical Co.
RS 20521	Arapahoe Chemical Co.
PD 1471	Arapahoe Chemical Co.
PD 1472	Arapahoe Chemical Co.
CI-2	Ethyl Corp.
PSP MC955	Petroleum Specialty Products Co.
PSP MC900	Petroleum Specialty Products Co.
Cerium	United Technology Research Center
Rare Earths Mixture	United Technology Research Center

[a]Not necessarily in order of effectiveness.

June 1976. Some of the findings of the report are presented here, along with results from a recently presented paper (Reference 2).

It has been established that most Navy engines are not adversely affected by the use of ferrocene additives, as long as the ferrocene concentration is kept at reasonable levels (0.1 percent) and additive use is confined to testing operations not exceeding 2 to 4 hours. Table 18 shows a list of the engines that have been tested with ferrocene additive. For each of the listed engine and model types, it has been found that ferrocene additive at an appropriate concentration can reduce the test cell plume density to Ringelmann No. 1 or below. It was also found that ferrocene use during testing is not injurious to engine performance or life; further testing is required to determine the effects of continued or long term use. Currently, approved test durations with ferrocene range from 0.75 hour for the TF41 engine to 2 hours for the J52.

TABLE 18. ENGINES SUITABLE FOR USE WITH FERROCENE ADDITIVES

Engine	Model Type	Smokeless Combustion Model Type
J79	GE8[a]	GE10-C
J52	P6	P408, P8B
J57	P10	
TF30	P6	P8, P408, P412
TF41	A2	
T56	A10	
T56	A16	

[a]Suitability for use with ferrocene additive is under consideration.

Table 19 shows, for various engines, the observed stack opacity without additive at the "dirtiest" engine power setting. The table also shows the ferrocene concentration required to reduce the plume opacity to 20 percent (Ringelmann No. 1) at the same power setting. These tests were conducted at the Alameda Naval Air Station test cells. Repeating the same tests at another cell or with a different engine of the same type might give somewhat different results. Also, the differences betweeen the findings of Reference 2 and Reference 38 indicate that these test results are not very reproducible. The tests do indicate, however, that adding small concentrations of ferrocene to the fuel can significantly reduce plume opacity for the engines tested.

TABLE 19. EFFECT OF FUEL ADDITIVE ON STACK OPACITY

Engine	Maximum Smoke Opacity (without additive)	% Ferrocene for 20% Opacity Ref. 2	Ref. 38
J57-P10	40%	0.05%	0.05%
J52-6	55%	0.10%	0.06%
TF41-A2	40%	0.02%	0.02%
T56-A16	30%	0.02%	0.02%
TF30-P6	35%	0.04%	0.06%
J79-GE8	50%	0.04%	0.10%
T56-A10	35%	0.03%	0.03%

The toxicity of the additive CI-2 has been a major reason why the Navy has stopped using it. Concern has also been expressed about dispersion of manganese (the metallic component of CI-2) by the test cell exhaust gases. The toxicity of ferrocene, the additive the Navy feels is

most suited to replace CI-2, has been evaluated recently. The NAPTC received a report of tests conducted at the U.S. Navy Toxicology Unit of the National Naval Medical Center. Tests completed include:

- Ocular and dermal irritation with
  - -- Ferrocene (dicyclopentadienyl iron)
  - -- Five percent ferrocene in JP-5
  - -- Twenty percent ferrocene in toluene
- Inhalation studies with
  - -- Ferrocene dust
  - -- JP-5 with ferrocene
  - -- Toluene with ferrocene
  - -- Xylene with ferrocene
- Acute oral toxicity of ferrocene (LD_{50})
- Acute peritoneal toxicity of ferrocene (LD_{50})

The results of the study are summarized by the following quotation (Reference 39):*

> "Ferrocene alone and in solution causes very little if any ocular irritation. Irritation studies on both abraded and unabraded skin were negative. Rat LD_{50} for ferrocene is 1890 mg/kg (oral) and 1520 mg/kg (intraperitoneal). Studies with ferrocene dust showed no significant toxic symptoms during and following exposures of up to 150 mg/m^3. Acute exposures to ferrocene and the solvents showed no increase in toxicity over the solvents alone."

*The ferrocene tested in this study was Arapahoe Fe 55^R which is a specially purified form of ferrocene. The intraperitoneal rat LD_{50} data presented here are somewhat higher than reported by other laboratories with other sources of ferrocene.

The health effects of emissions from test cells in which CI-2 or ferrocene is being used have not been determined.

The effect of ferrocene additive on gaseous and particulate emission has been studied in the Alameda NAS tests. For gaseous emissions (CO, SO_x, CO_2, NO_x, UHC), the additive produced no changes in pollutant concentration. However, findings indicated a definite reduction in particulate emissions when ferrocene was used. Figure 20 shows particle mass loading as a function of engine power setting, with and without the additive. In Figure 20, NR refers to Normal Rating power level, and MR means Military Rating power level. These data were collected at one sampling location at the exit plane of the test cell stack. EPA Method 5 sampling was used.

One problem related to continuous (inflight) use of ferrocene is the reduced thermal stability with ferrocene-treated fuel. A high temperature (400-500°F) thermal stress test indicated that ferrocene -- an oxidation catalyst -- causes significant increases in carbon and sludge deposition. A similar, though less severe, problem occurred with the manganese additive. As a result of an extensive experimental program at Wright Patterson AFB, the Air Force now believes that manganese based additives with minor amounts of a barium compound to promote stability offers the best compromise between effectiveness and reducing opacity, freedom from operational problems, and safety. Air Force personnel believe that this additive is also capable of reducing test cell plumes from most engines in their inventory to 20 percent opacity or lower.

6.5.1 Civilian Airline Additive Use

Although this study was primarily concerned with military test cells and test cell pollution abatement programs, a brief investigation of

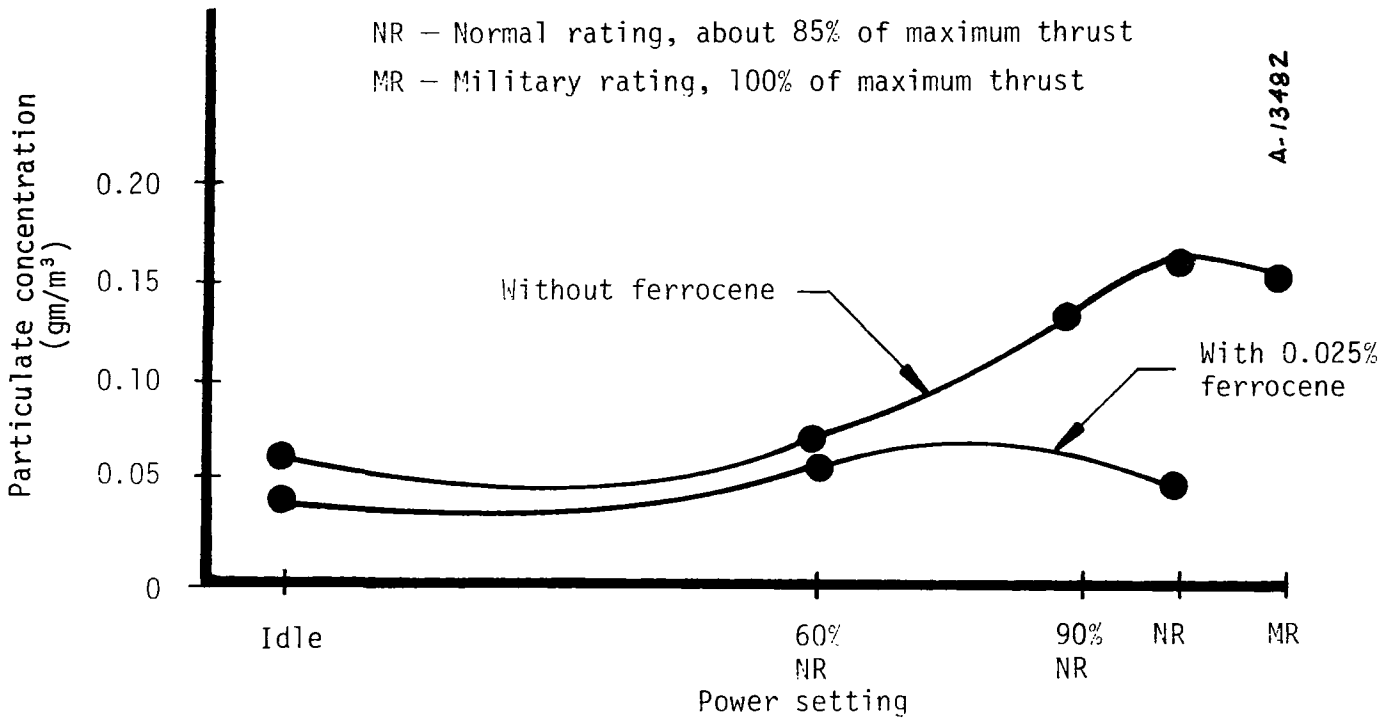

Figure 20. Effect of ferrocene on particulates (Reference 2).

commercial airline practices was conducted. Letters were also sent to the executives responsible for the maintenance operations of the major airlines. These letters requested information about any methods or devices used to control test cell emissions. Requests were also made for any information specifically related to their use of fuel additives. Replies were received in most cases. The responses are shown in Table 20. In general, additives are used by those airlines with a significant inventory of older dirtier, JT3, JT4, and JT8 engines. Several airlines stated that the additives would be phased out in the near future as they switched over completely to smokless combustor engines.

6.6 OTHER ABATEMENT METHODS

During the approximately 8 years that test cell emission abatement has been seriously pursued, numerous techniques and devices have been proposed. The five methods previously discussed -- nucleation scrubbing, fuel additives, thermal converter, fuel atomization, and electrostatic precipitation -- are the ones the Navy has considered promising enough to warrant experimental investigation. Many other methods have been considered and ruled out because of some clearcut technical or economic problem. The characteristics, costs, and application to test cells of many of these methods are summarized in References 10, 17, 19, and 20.

Table 21 (Reference 10) shows the relative characteristics of a number of abatement methods. Table 22 (Reference 17) is more quantitative. It includes estimates of capital and operating costs as of mid-1973. The control equipment in Table 22 is sized to baseline gas flow of 1,200,000 acfm. This is a much higher airflow than is commonly encountered in cells. For example, the workhorse J79 engine produces stack gas flow of about 500,000 acfm at military power setting and 700,000 acfm in

TABLE 20. FUEL ADDITIVE USE BY COMMERCIAL AIRLINES

Airline	Additive used	Engines with which additives are used	Amount of Additive used	Approximate % Engine tests using additive
United	Apollo DGT-2	JT4, JT8, JT3D, JT3, JT4	Technician's discretion	—
National	See below[a]	—	—	—
Braniff	CI-2	All JT3D and some JT8D	—	—
Western	CI-2	JT3D	15 drops/ 1000 gal fuel	50%
American	NONE	—	—	—
TWA	CI-2	JT4, JT3D	0.05-0.1% by volume	15%
North Central	NONE	—	—	—
Pan American	CI-2	JT3D, JT4, JT8D	Technician's discretion[b]	44%
Allegheny	NONE	—	—	—
Delta	NONE	—	—	—
Continental	CI-2	JT3D, JT8D	1 gal/ 1000 gal fuel	—

[a]TWA does overhauls — data included in TWA figure.

[b]The concentration of additive is that which past experience has shown to give adequate plume opacity control, for a given engine type.

TABLE 21. SUMMARY OF PARTICULATE ABATEMENT SYSTEMS (Reference 10)

PARTICULATE ABATEMENT METHOD	CAPTURE EFF. 1 μ	CAPTURE EFF. 0.1 μ	FLOW CAPACITY	RELATIVE PRESSURE DROP	POWER/FUEL REQUIREMENT	COMPATIBILITY WITH TEST CELL PLANT	WATER CONSUMPTION	ABILITY TO HANDLE FLOW VARIATIONS	DEVELOPMENT REQUIREMENT	OTHER POLLUTANTS REMOVED	COMPATIBILITY WITH NO_x REMOVAL	TEMPERATURE CAPABILITY	COST	REMARKS
Dry Cyclone	L	L	H	L	NA	H	NA	M	L	NONE	M	H	L	Would not meet visibility or mass emission goals
Fabric Filter	H	M	L	M	L	L	NA	M	L	UHC(liquid)	M	M	M	Potential high ΔP if clogged. Potential fire hazard with UHC - only moderate visibility emission abatement
Acoustical Filters	L	L	L	L	H	M	NA	M	H	NONE	M	M	H	Would not meet visibility or mass emission goals
Magnetic Filters	H	M	L	L	H	L	NA	M	H	NONE	M	M	H	Very early development stage - requires massive auxiliaries used only as secondary system
Wet Scrubbers														All comments predicated on exhaust preconditioning
Spray	L	L	M	L	L	M	L	L	L	CO, UHC	H	L	M	Would not meet visibility goal
Venturi	H	M	M	H	M	M	H	L	L	CO, UHC	H	L	H	Will not handle test cell flow variations - high ΔP could require auxiliary fan
Plate	M	L	H	M	L	M	L	M	L	CO, UHC	H	L	M	Would not meet visibility goal
Baffle	L	L	H	L	L	M	M	M	L	CO, UHC	H	L	M	Would not meet visibility goal
Impingement	M	L	H	H	L	M	M	M	L	CO, UHC	H	L	M	ΔP could require auxiliary fan
Moving Bed	H	M	M	H	M	M	M	L	M	CO, UHC	H	L	H	Does not easily handle test cell flow variations
Filter Bed	M	L	M	M	M	M	M	L	L	CO, UHC	H	L	M	Would not meet visibility goal
Packed Bed	H	M	H	L	L	H	M	M	L	CO, UHC	H	L	M	Now in use on prototype installation
Centrifugal	H	M	H	M	L	M	L	H	L	CO, UHC	H	L	M	Potential for test cell use - minimized water losses
Electrostatic														
Dry	H	M	H	L	H	M	NA	M	L	NONE	M	M	H	Would not meet visibility goals - high lost
Wet	H	H	M	L	H	M	M	M	L	CO, UHC	M	L	M	Preconditioning enhances performance - potential for test cell use
Incineration														
Conventional	H	M	M	M	H	L	NA	M	L	CO, UHC	L	H	H	Limited particulate removal - high cost
Innovative	H	H	H	H	H	H	NA	M	M	CO, UHC	L	H	M	Development required - moderate potential for test cell use - could emit NO_x
Infrared	M	M	H	M	H	H	NA	M	H	UHC(liquid)	M	H	H	Requires large development effort - costs could be high - effectiveness on visible emissions questionable

H = High
M = Moderate
L = Low
NA = Not Applicable

TABLE 22. COMPARATIVE DATA — ALTERNATE GAS CLEANING SYSTEMS (Reference 17)

	POLLUTANTS ABATED	DESIGN PARAMETERS					WATER REQUIREMENTS		POWER REQUIREMENTS			COSTS	
		MAX. GAS FLOW(1) (ACFM)	MAX. GAS TEMPERATURE °F	MAX. GAS VELOCITY (FPM)	GAS FLOW AREA (FT^2)	MAX. GAS PRESS. DROP (IN H_2O)	PRETREATMENT SPRAY (GPM)	GAS CLEANING (GPM)	WATER PUMPING (KW)	OTHER (KW)	TOTAL (KW/1000 CFM)	CAPITAL COSTS 10^6 $	ANNUAL OPERATING COSTS(5) 10^3 $
DIRECT FLAME AFTERBURNER	SMOKE, SOL. & LIQ. PART. CO, GASEOUS C_xH_y	3,320,000	1500	1500	900/ 1000	0	2000(3)	–	–			1.0 – 1.5	1300/ 1500
FLOATING BED SCRUBBER	SMOKE, SOLID PART. SOME NO_2 & LIQ. PART.	1,200,000	167	500/ 800	1500/ 2400	10-12	2000(3)	60,000	3450	–	2.90	1.2 - 1.5	80/ 90
VARIABLE THROAT VENTURI	SMOKE, SOLID PART. SOME NO_2 & LIQ. PART.	1,200,000	167	400/ 500 (2)	2400/ 3000 (2)	40-70	2000(3)	8,400	700	–	0.585	1.2 - 1.5	20/ 25
IMPINGEMENT PLATE SCRUBBER	SMOKE, SOLID PART. SOME NO_2 & LIQ. PART.	1,200,000	167	400/ 500	2400/ 3000	6-10	2000(3)	4,800	510	–	0.425	10 - 1.2	15/ 20
REBOUND ENTRAINMENT SCRUBBER	SMOKE, SOLID PART. SOME NO_2 & LIQ. PART.	1,200,000	167	600/ 650	1850/ 2000	2-3	2000(3)	11,000	1950	–	1.63	1.2 - 1.5	45/ 55
JET SCRUBBER	SMOKE, SOLID PART. SOME NO_2 & LIQ. PART.	1,200,000	167	400/ 500 (2)	2400/ 3000 (2)	PROVIDES HEAD	2000(3)	7,200	3710	–	3.10	1.2 - 1.5	90/ 100
NUCLEATION/PACKED BED SCRUBBER	SMOKE, SOLID PART. SOME NO_2 & LIQ. PART.	1,200,000	167	600	2000	2-3	2800(4)	14,000	1100	300	1.18	0.9 - 1.2	25/ 35
IRRIGATED PRECIPITATOR	SMOKE, SOL. & LIQ. PART. SOME NO_2	1,200,000	167	1200/ 1400	850/ 1000	5-8	2800(4)	4,200	574	250	0.685	2.5 -3.0	20/ 25
DRY SINGLE STAGE PRECIPITATOR	SMOKE, SOL. PART. SOME LIQ. PART.	1,460,000	400	300/ 350	4200/ 4850	0.5-1	2000(3)	–	250	1900	1.79	1.5 - 2.0	20/ 30
INTERMITTENTLY WASHED TWO – STAGE PRECIPITATOR	SMOKE, SOL. & LIQ. PART.	1,200,000	167	300/ 350	3400/ 4000	0.5-1	2800(4)	60	350	120	0.35	0.9 - 1.2	10/ 15
BAGHOUSE	SMOKE, SOL. PART SOME LIQ. PART.	1,460,000	400	3 – 6	244,000/ 485,000	3-5	2000(3)	–	250	100	0.29	2.5 - 3.0	9/ 13
VISCOUS FILTER	NONE	1,200,000	167	500	2400	0.3-0.5	2800(4)	–	350	100	0.375	0.2 - 0.3	15/ 20

(1) LEAVING EQUIPMENT
(2) LIQUID/GAS SEPARATION COMPONENT
(3) BASED ON 400°F ENTERING EQUIPMENT
(4) BASED ON 167°F (SAT.) ENTERING EQUIPMENT
(5) BASED ON 500 TESTS/YR OF 350 LB/SEC ENGINE; EXCLUDES MAINTENANCE AND SOLID&LIQUID SEPARATION

afterburner mode, including augmentation airflow. The J79 is one of the larger engines tested in military test cells. The cost figures in Table 22 should be used cautiously as they are only rough approximations based on an "average" test cell.

Discussed below are some of the test cell cleanup methods considered, but not experimentally evaluated, by the Navy.

6.6.1 Cyclone Separators

Cyclones are inertial particle collection devices in which carrier gas containing particles is spun rapidly within a closed cylindrical shell. Centrifugal force moves the particles to the wall of the cyclone. From there they move to lower velocity regions of the device and are collected. Cleaned gas exits at the center of the cyclone cylinder. Cyclone dust collectors are commonly used because of their low capital cost, ability to run hot, and good collection efficiency for particles with diameters greater than about 5 microns. It is easy to design cyclones that can efficiently collect particles in the submicron range (such as those found in test cells); however, this cannot be done without incurring an increased pressure drop. For effective collection of 0.5 microns, for example, simple calculations show that for reasonably sized cyclones, pressure drops on the order of 100 to 300 inches of water would be required. This is far in excess of the 10 to 20 inches of water allowed for a test cell cleanup device.

6.6.2 Fabric Filters

Fabric filters are commonly used to separate solid particles from liquid or gaseous media. These filters are capable of collecting particles much smaller than the space between the filter fibers. This is due to the fact that most of the filtration is accomplished by the coating of

material already collected, rather than by the fibers themselves. If glass cloth fabrics are used, fabric filters can operate at temperatures approaching 600°F. Fabric filters are simple, effective, and well developed for numerous applications. However, there are several characteristics of test cells that make these filters of doubtful value as cleanup devices.

Fabric filters are low velocity devices. When fiberglass cloth is used, superficial velocities of about 2.0 acfm/ft^2 should not be exceeded (Reference 37). This means that for a J79 engine with sufficient augmentation air to drop the gas stream temperature to 550°F, about 400,000 feet^2 of filter area would be required. With water spray cooling (which introduces other problems), a filter area of about 250,000 ft^2 would still be required. Considering the various constraints on bag arrangement, bag cleaning devices, and dust hopper arrangement, a baghouse to handle this flow would have dimensions of about 110 ft. x 110 ft. x 40 ft. high (Reference 10). This is comparable to the size of the test cell. Finding space for such an installation would be impossible in most cases. The installed cost of such a baghouse would be about $2.50/acfm, or $1 to $1.5 million. Finally, maintenance costs due to bag tearing and blinding have been estimated at twice that of wet scrubbers or ESP's. Fabric filters pose other problems, also. They create a fire hazard because of the large area coated with carbonaceous particles. Also, filters do not work well in conjunction with exhaust water spray cooling because the water can blind the fabric. Considering all of these factors, fabric filtration does not seem to be a promising approach to test cell cleanup.

6.6.3 Venturi Scrubbers

Venturi scrubbers are particulate collection devices in which the gas to be cleaned is accelerated to a high velocity, then sprayed with water droplets. The high relative velocity between water droplets and particles in the gas causes impaction between the particles and the water drops. The dirty water drops are collected in a demisting section downstream from the venturi scrubber. Collection of the particulate is enhanced if condensation is induced by saturating the gas in the reduced pressure region at the venturi throat. Water vapor condensation on the particles causes particle growth and increased probability of collection.

Venturi scrubbers are very effective for collecting particles with diameters greater than about 1 to 2 microns. But to collect smaller particles, large gas pressure drops are required. To effectively collect particles of 0.5 micron requires a water pressure drop from 40 to 80 inches. These pressure drops increase operating cost and tend to make venturi scrubbers less competitive with packed scrubbers.

6.6.4 Coanda Noise Suppressor

The Coanda system (References 4 and 5) is designed to control noise, but if affects pollution control systems in several ways. The Coanda can best be understood by studying Figure 21. Figure 21(a) shows a freestream jet exhaust. The hot gases are confined to a cone with its apex at the exhaust nozzle. Because of the high temperature in the gas stream, the noise is refracted away from the exhaust. This is the reason a jet engine sounds much louder 45° off-axis than directly behind the engine.

Figure 21(b) shows the principle of the Coanda system. When a curved plate is placed directly above the engine exhaust outlet, the hot

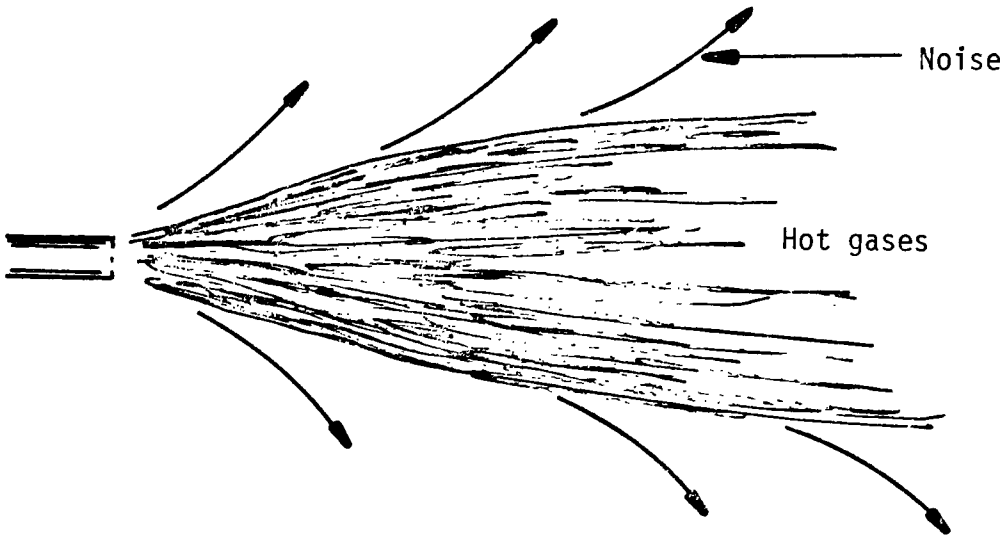

a. Unconfined jet exhaust

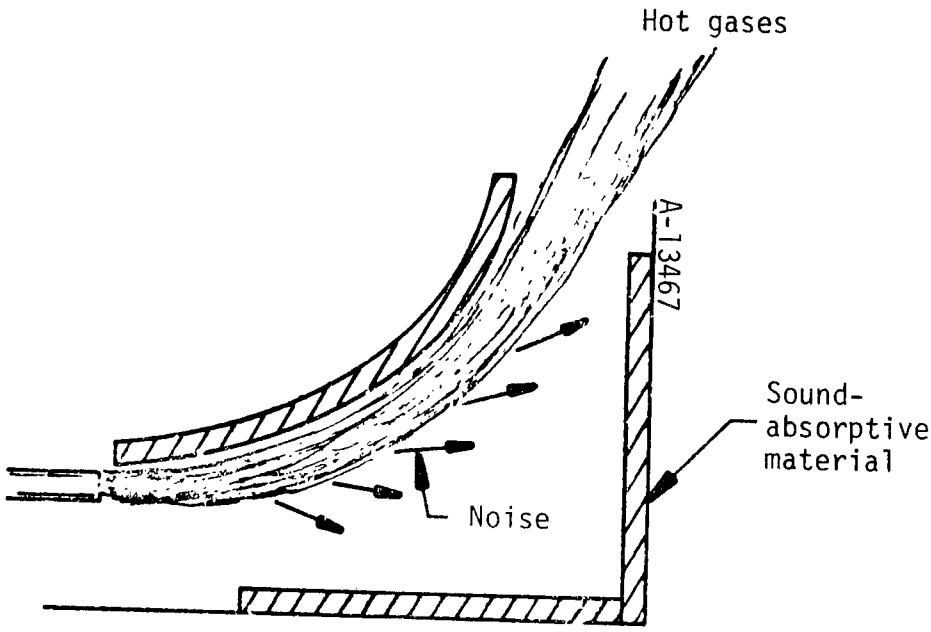

b. Coanda gas-noise separator

Figure 21. Principle of Coanda device.

gases of the exhaust stream cling to the plate (the Coanda effect). The noise is refracted away from the gas stream and is absorbed in sound-absorptive material. The sound-absorptive material is not exposed to thehot gas stream, as is the case in conventional test cells. This is the primary advantage of the Coanda system. The hot gas stream and the noise are separated, and each can be handled separately and, hopefully, more effectively than when both must be controlled simultaneously.

One obvious advantage to separating the gas flow and noise is that the test cell does not require water spray cooling of the exhaust. In conventional cells, this water cooling is needed to protect the sound suppression equipment. Elimination of water cooling of the exhaust may significantly reduce the opacity of the test cell plume. As a further advantage, dry operation allows a much wider choice of sound absorptive material.

A full-scale Coanda cell is now being tested. A final report on these tests is scheduled to be issued sometime in March 1976. In addition, there is a current project at the U.S. Naval Academy to consider the effects on test cell operation of pollution control devices that could be installed on a Coanda-equipped test cell stack.

6.6.5 Hush House

The hush house is simply a room large enough to contain an entire aircraft. There is a long, wide-mouthed exhaust tunnel with a deflector baffle at the end which directs the exhaust vertically. Figure 22 shows the hush house at Miramar Naval Air Station. The hush house was designed to suppress noise when testing engines in aircraft. There is, however, an unexpected additional result. Opacity readings from the hush house stack are lower than readings from the same engine tested in a conventional test

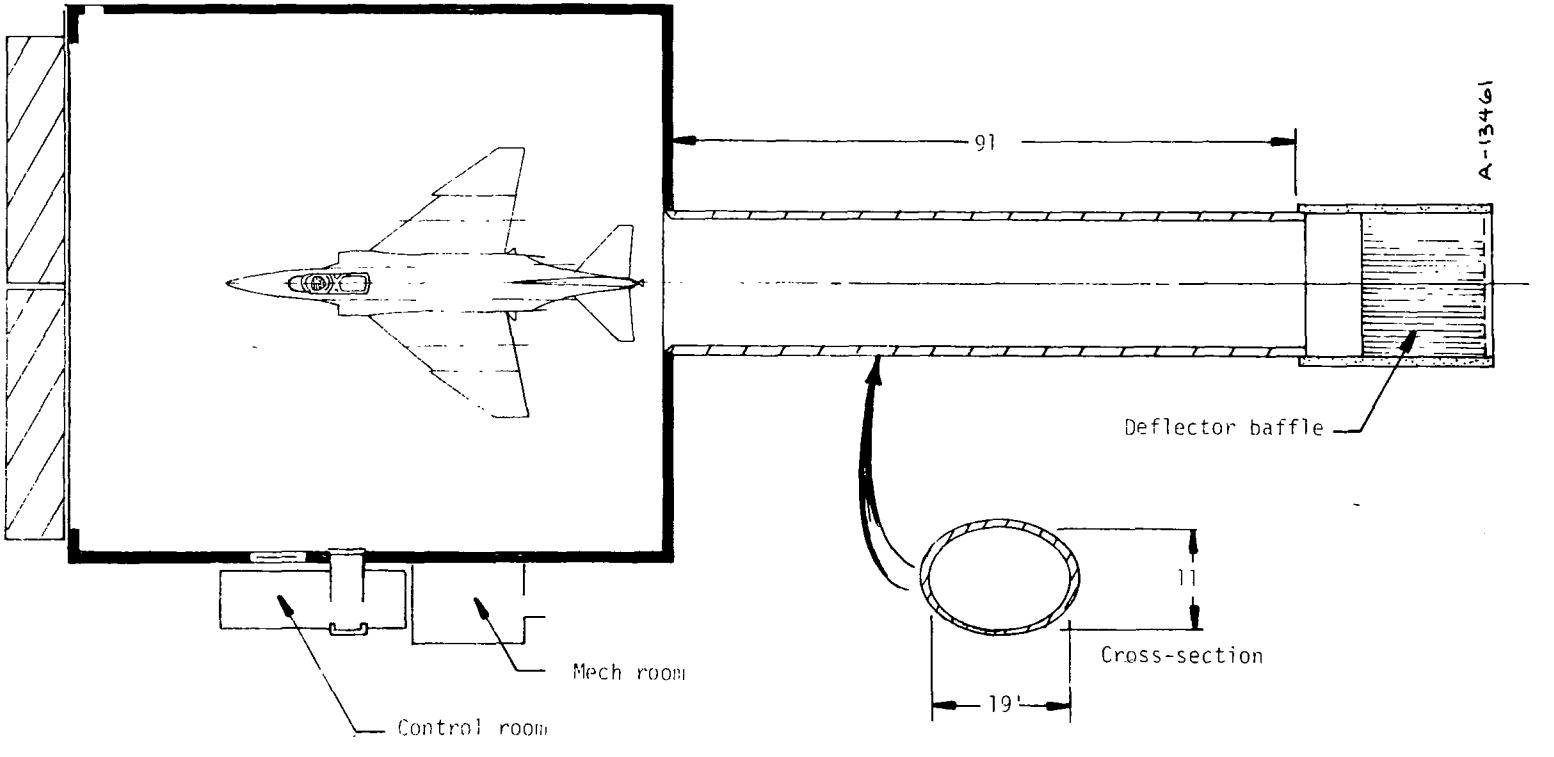

Figure 22. Hush house at Miramar Naval Air Station.

cell. In fact, the opacity readings from all engines tested in the hush house are less than 20 percent, except for the J79 engine in the F4, which has an opacity of about 20 percent.

The lower plume opacity from the hush house is apparently due to exhaust stream dilution brought about by the large quantity of air entrained. The wide-open exhaust tunnel entrance (no augmenter is used), combined with the great length of the tunnel, produces a diluted, well mixed plume with a relatively low opacity.

6.7 SUMMARY OF CLEANUP TECHNOLOGY

Several exploratory studies of possible test cell cleanup methods have been made. Based on these studies, the Navy, which has been given responsibility for military test cell cleanup device development, has sponsored experimental work in five areas. These areas are:

- Electrostatic precipitators
- Nucleation scrubbers
- Thermal converters
- Fuel atomization improvement
- Fuel additives

A sixth method, clean combustion engine modifications, will be discussed in Phase II of this study.

Of the above five methods, only two -- nucleation scrubbers and fuel additives -- are reasonably well developed. Fuel additives reduce test cell plume opacity, and may reduce particulate loadings somewhat. Use of fuel additives is easily and inexpensively implemented. They do not seem to cause serious engine performance degradation when employed within recommended time and concentration limits. The extended use of some fuel additives (e.g., CI-2) is known to be detrimental to engine

life. The point at which the extended use of ferrocene will cause detrimental engine changes is not known. Both the Navy and the Air Force are now studying this question. A nucleation scrubber is the only test cell cleanup device that has been experimentally evaluated on a full-scale test cell. Incomplete emissions sampling indicates that particulate and condensible hydrocarbons are substantially removed.

The electrostatic precipitator, fuel atomization improvement, and thermal converter concepts have been tested experimentally only in small scale models. All seem to be capable of reducing test cell emissions. Their drawbacks are high operating cost (thermal converter), operating problems (ESP), and limited pollutant reduction (fuel atomization). Each of these three methods would require further development before it could be considered ready for full scale demonstration.

Several concepts not experimentally evaluated by the Navy -- cyclones, fabric filters, venturi scrubbers -- are briefly considered. It is concluded that none of these methods seems worthy of experimental study. Two recent noise control concepts are discussed because their implementation would impact the other cleanup technologies. These are the hush house and Coanda nose control systems.

Cost data for each of the five experimentally-evaluated test cell cleanup methods is presented. For the nucleation scrubber, the most developed method, three different cost estimates were obtained. These estimates differ by a factor of nearly 3 to 1.

Foreign test cell cleanup technology was not investigated directly. No such cleanup technology was discovered in the literature or in the discussions with the people listed in Appendix B.

REFERENCES

1. Kikin, I. and R. Bennett, "Chemical Reduction of SO3, Particulates, and NOx Emissions," presented at The International Energy Engineering Congress, Chicago, November 4-5, 1975.

2. Klarman, A. F. and J. E. Horling, "Particulate Sampling from Gas Turbine Engines," Paper 27-5, presented at the Third International Conference on Environmental Sensing and Assessment, Las Vegas, Nevada, September 14-19, 1975.

3. Moses, C. A., "Reduction of Exhaust Smoke from Gas Turbine Engines by Using Fuel Emulsions," Interim Report AFLRL No. 68, July 1975.

4. Naval Air Engineering Center Report No. NAEC-GSED-80, Final Technical Report, "Initial Model Studies/Coanda Refraction Noise Suppression Concept -- Exploratory Development," May 1974.

5. Naval Air Engineering Center Report No. NAEC-GSED-81, "Final Technical Report, "Scale Model Studies/Coanda Refration Noise Suppression Concept -- Exploratory Development," May 1974.

6. Demetri, E. P., "Model Testing of a Thermal Converter for the Control of Exhaust Emissions from Navy Jet Engine Test Cells," Northern Research and Engineering Corporation Report No. 1219-1 for Naval Air Engineering Center, July 11, 1975.

7. Northern Research and Engineering Corporation, "Preliminary Design of a Thermal Converter for the Control of Exhaust Emissions from Navy Jet Engine Test Cells," Report No. 1188-1, 1973.

8. White, H. J., "Industrial Electrostatic Precipitation," Addison-Wesley, REading, Pennsylvania, 1963, p. 359.

9. United Engineers and Constructors, Inc., "Test and Evaluation of a Pilot Two-Stage Precipitator for Jet Engine Test Cell Exhaust Gas Cleaning," Final Draft Report, September 1975.

10. Robson, F. L., et al., "Analysis of Jet Engine Test Cell Pollution Abatement Methods," AFWL-TR-73-18, May 1973. Available from NTIS as AD-763119.

11. Teller, A., "Turbine Emission Control -- A Systems Approach," Teller Environmental Systems, Inc., Worchester, Massachusetts.

12. Teller Environmental Systems, Inc., "Jet Engine Test Cell TESI Augmenter-Scrubber System," Contract No. N62467-70-C-0240, December 1971.

13. Kemen, R. J., et al., "Jet Engine Test Cell Pollution Abatement Efficiency Tests," Naval Air Rework Facility, Jacksonville, Florida, March 1973 - May 1974

14. Krimmel, J. A. and B. A. Longley-Cook, "The Effect of a Model Scrubber on Gaseous EMissions from a Gas Turbine Engine Test Cell," Report No. AESO 113-74-1, August 1973.

15. Morhard, W.D., "Joint Navy-Air Force Jet Engine Test Cell Study, Phase II -- Draft Report." Final report scheduled for issuance in July 1976.

16. Bailey, D. L. and P. W. Tower, "Production Test Facilities for Turbojet and Turbofan Engines -- 1975 to 1995," Naval Postgraduate School Report No. NPS-57Ba-FO-72061A.

17. Ferner, J. A., et al., "A Study of Means for Abatement of Air Pollution Caused by Operation of Jet Engine Test Facilities," Naval Facilities Engineering Command No. 5685-000, August 1973.

18. Morhard, W. C., Naval Air Systems Command. Private Communication.

19. Kelly, C. M., "Air Pollution Abatement for Jet Engine Test Systems," Naval Air Engineering Center Report No. NAEC-GSED-64.

20. C. F. Braun and Co., "Turbojet Aircraft Engine Test Cell Pollution Abatement Study," Naval Facilities Engineering Command Report No. CR74.001.

21. Lindenhofen, H. E., "State-of-the-Art Review of Gas Turbine Engine Exhaust Smoke Monitors," Naval Air Propulsion Test Center Report No. NAPTC-AED-1956, August 1971.

22. Lindenhofen, H. E., "A Survey of the Air Pollution Potential of Jet Engine Test Facilities," Naval Air Propulsion Test Center Report No. NAPTC-PE-3, October 1972.

23. Champagne, D. L., "Standard Measurement of Aircraft Gas Turbine Engine Exhaust Smoke," ASME Paper No. 71-GT-88.

24. SAE Aerospace Recommended Practice 1179, "Aircraft Gas Turbine Engine Exhaust Smoke Measurement," Society of Automotive Engineers, New York, N.Y., May 4, 1970.

25. Klarman, A., "Gas Turbine Engine Particulate Measurement Technique --Summary of Coordinating Research Council Program," Interim Report, Naval Air Propulsion Test Center, November 6, 1974.

26. Bogdan, L., et al., "Analysis of Aircraft Exhaust Emission Measurements," Cornell Aeronautical Laboratory, October 15, 1971. Available from NTIS as PB204,879.

27. "Aircraft Engine Emissions Catalog," Report No. AESO 101 -- Revision 3, June 1974.

28. Environmental Protection Agency, "Compilation of Air Pollutant Emission Factors," 2nd Edition, USEPA, Research Triangle Park, N.C., April 1973.

29. Poth, E. W. and E. R. Lozano, "Air Pollution Emissions from Jet Engines," USAF Regional Environmental Health Laboratory, Kelly AFB, Texas, February 1967.

30. U.S. Bureau of Mines, "A Field Survey of Emissions from Aircraft Turbine Engines," USBM Report No. R17634, May 1972.

31. Slusher, G. R., "Sulfur Oxide Measurement in Aircraft Turbine Engine Exhaust," National Aviation Facilities Experimental Center Report No. FAA-NA-75-10, September 1975.

32. Faitani, J. J., "Smoke Reduction in Jet Engines through Burner Design," SAE Paper 680348, 1968.

33. DeCroso, S. M., et al., "Smokeless Combustion in Oil Burning Gas Turbines," ASME Paper 67-PWR-5, 1967.

34. Lieberman, A., "Composition of the Exhaust from a Regenerative Turbine System," JAPCA 18, pp. 149-153, 1968.

35. Stockman and Betz, "Study of Visible Exhaust Smoke from Aircraft Engines," SAE Paper 710429, May 1971.

36. Grems, B. C., "Plume Opacity and Particulate Emissions from a Jet Engine Test Cell," M.S. Thesis, University of California, Davis, 1975.

37. Spaite, P. W., et al., "High Temperature Fabric Filtration of Industrial Gases," JAPCA, May 1961.

38. Klarman, A., Naval Air Propulsion Test Center. Private communication, January 17, 1976.

APPENDIX A

SCRUBBER RETROFIT COST ESTIMATE

The following detailed cost estimate is reproduced as received from Teller Environmental Systems, Inc.

ESTIMATED COST FOR A TELLER ENVIRONMENTAL SYSTEMS, INC. EMISSION CONTROL SYSTEM FOR A STANDARD JET ENGINE TEST CELL (J 79 ENGINE)

14 January 1976

by Charles B. Wyman

Denis R. J. Roy

I. INTRODUCTION

The size of the Nucleation scrubber system is predicated on testing the J-79 jet engine in its maximum afterburner mode (17,500 lbs. thrust). Also, the use of a TESI designed augmenter is assumed in order to reduce the amount of dilution air required.

Basis for the estimate is the prototype installation now operational at the Black Point test cell number one (1) NARF-JACKSONVILLE, FLORIDA. The estimate reflects refinements in material selection as well as improvements in design developed from operation of the prototype unit.

The cost per cell was established using the following assumptions:

1. A common cooling tower is to be used for two test cells.
2. The Cooling Tower is located between the two test cells (Est. 200 ft. between cells).
3. One solids treatment system would be required for two test cells.
4. Structural design - no snow loads incorporated.

The flow sheet attached is representative of typical flow conditions for gas and liquid streams.

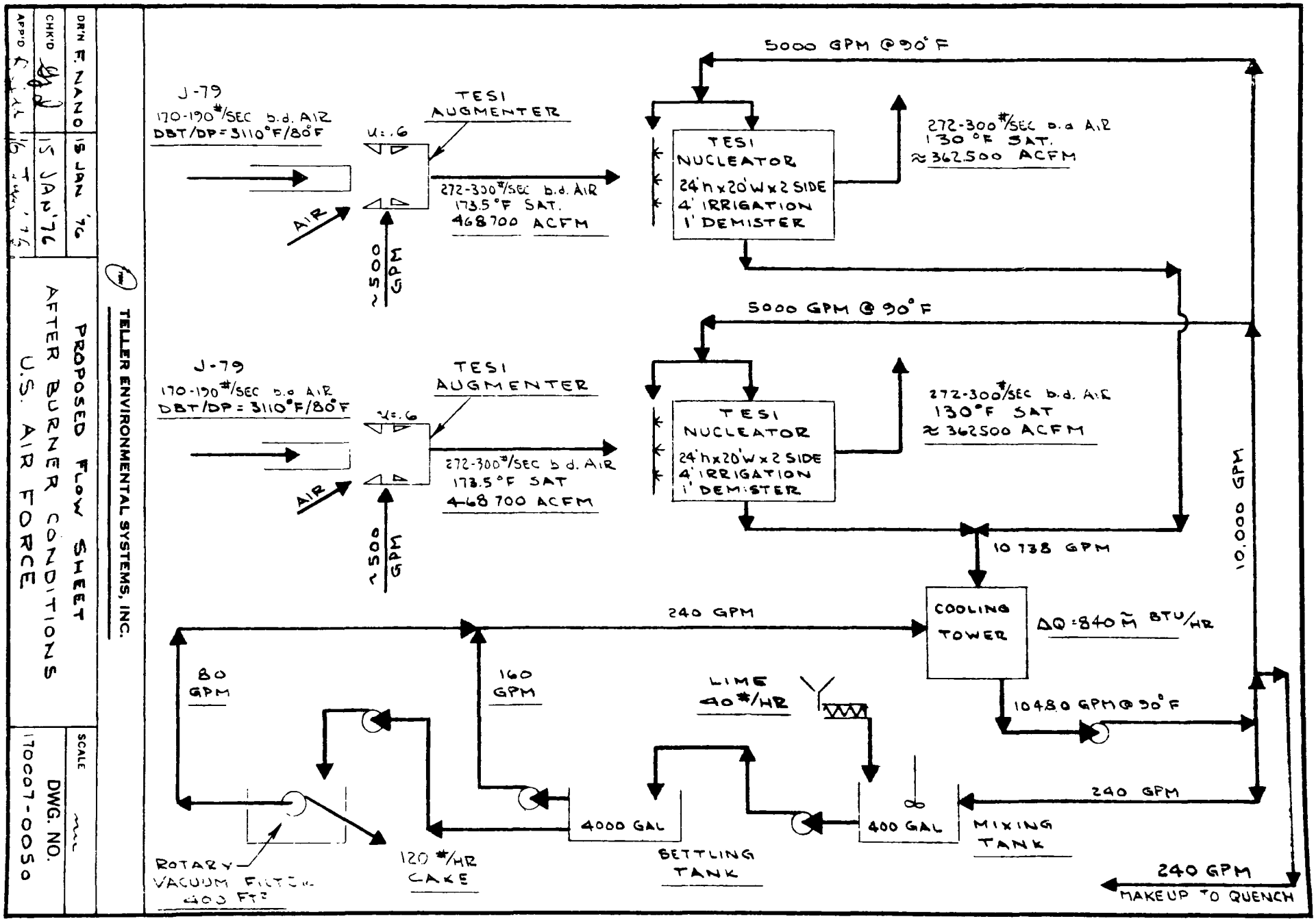

DR'N F. NANO 15 JAN '76
CHK'D 15 JAN '76
APP'D

TELLER ENVIRONMENTAL SYSTEMS, INC.

PROPOSED FLOW SHEET
AFTER BURNER CONDITIONS
U.S. AIR FORCE

SCALE
DWG. NO. 170007-0050

II. SYSTEM DESCRIPTION

The Nucleation system to be employed for emission control would consist of five major components:

1. TESI Augmenter
2. Quench System (Existing)
3. Nucleation Scrubber System
4. Recycle Cooling System
5. Solids Treatment System

The TESI Augmenter (proprietary) has approximately the same physical size as the conventional augmenters (6 feet diameter x 12 feet overall lenght). It has a similarity in the converging inlet section and quench spray ring. The main differences are quench design, the diverging section, and the recycle gas system. Material of construction would be carbon steel with the quench ring of stainless steel.

The quench systems employed with the present augmenters could be adapted to the new TESI augmenter at minimal cost.

The Nucleation Scrubber (proprietary) design is essentially the same as the prototype design, that is the scrubber consists of two identical sections mounted with independent supports parallel to sides of the exhaust stack. Typical overall scrubber dimensions can be approximately 22 feet

long x 27 ft high x 28'-6" wide including discharge louvers. Although dimensions can be modified to adopt to orientations. Typical packed sections have a face dimension of 20 ft wide x 24 ft high and each would contain a 4 ft depth of 2 inch nominal polypropylene Tellerettes followed by a divider support plate and a one ft depth of 1 inch nominal polypropylene Tellerettes, Each side would be made of three 6'-8" wide modules constructed of FRP material. The 2 inch packing is to be irrigated from above by two spray headers with polypropylene nozzles and from the inlet side with face sprays.

Above the center of the exhaust stack outlet would be located turning vanes to distribute the gas flow to the packed beds. These vanes would be carbon steel with a high grade epoxy coating.

The gas are discharged to the atmosphere at an angle of 45° upward via gull wings (stationary louvers) constructed of FRP and mounted on the scrubber section. The sides and top of the unit would be enclosed with a heavy duty corrugated FRP sheathing.

The liquid effluent is collected in clopped bottom troughs containing baffles to prevent gas bypass. The collected

liquid is discharged by gravity to the cooling tower sump. These troughs would be constructed of carbon steel with epoxy coating inside and outside.

All structural steel would be of ASTM A-36 specifications and would be prepared for and coated with an epoxy paint system.

All piping is carbon steel schedule 40 and includes recycle water lines between the scrubber system and the cooling tower. Two pumps with drives capable of delivering each 5500 GPM at 110' TDH would be installed. Carbon steel wetted parts would be employed.

Instrumentation would provide for local indication of liquid flow, pressures, temperature and level as well as alarm circuits.

The recycle cooling system is comprised of a tower capable of handling the peak thermal load of two test cells, with the J-79 engines in afterburner mode.

A standard cooling tower approximately 90 ft x 60 ft constructed of wood or plastic with a concrete sump would be required. Thermal load on the unit would be of the order of 840 M BTU/hr for both cells. The remainder of the cooling system would be comprised of

level, temperature and pressure indicators, miscellaneous piping and structural steel for access ladders and platforms.

The solids treatment system would consist of a 500 gallon mix tank (FRP) with agitator, a lime feeder (40 #/hr normal), a 5000 gallon (FRP) settling tank and a rotary vacuum filter (400 ft filter surface, wetted parts 304 s.s). Connecting piping and pumps would be mild steel construction. Instruments would include a flow control loop and a level control loop. Structural supports for feeder would be to ASTM A-36 specifications and would be prepared for and coated with an epoxy paint system.

ENGINEERING SERVICES PROVIDED BY TESI

Process Flow Diagrams

Piping and Instrument Diagram

General Arrangement Drawings

Equipment List and Specifications for Purchased Equipment

Fabrication Drawings for Manufactured Process Equipment

Isometric Piping Drawing

Plan and Elevation Piping Drawings Including Supports & Hangers

All Foundation and Concrete Design

All Structural Steel Design Including Pipe Supports and Hangers, Platforms etc.

All Painting

All Electrical Work (including one line and elementary diagrams, specifications, etc.) Required For Installation, Including Local and National Codes etc.

All Instrumentation and Electrical Location Plans.

Lighting

Noise Silencing Provisions that may be Required in the system with such equipment as a vacuum pump

All Erection Specifications

All Erection Supervision and Inspection

Purchasing of All Equipment and Materials

Operating and Maintenance Manuals

Recommended Spare Parts Lists

Preparation and up-dating monthly of a schedule for the job showing key milestones, activities and action dates.

Total Responsibility For All Erection and Construction

ENGINEERING SERVICES PROVIDED BY TESI (CONT'D)

Total Responsibility For Receiving, Unloading, Inspecting, and Storing All Equipment and Materials Delivered to Job Site.

Turnkey - Engineering

Cost For Two Test Cells, One Cooling Tower, One Solids Treatment System, and TESI Augmenter $225,000

All Engineering Listed Above Including (but does not include direct construction labor cost or equipment cost) Supervision of Erection & Purchasing

Performance Guarantee

<10% Opacity

<0.004 gr/scf

All services and equipment to bring system into performance guarantee.

Equipment Guarantee

Equipment guaranteed for one (1) year from date of start-up. Life expectancy of the unit 15-25 years.

SUMMARY OF COSTS

SECTION	TOTAL COST
TESI Augmenters	$ 36,600
Nucleation Systems	526,200
Cooling System	336,000
Solids Treatment System	179,500
Sub-Total	$1,078,300
Contingency 10%	108,000
Engineering & Royalty	225,000
TOTAL COST FOR INSTALLED SYSTEMS ON TWO JET ENGINE TEST CELLS	$1,411,300
EQUIVALENT COST PER TEST CELL	$ 705,650

BREAKDOWN OF COSTS FOR ONE TEST CELL

	(Prop-Rated from Cost of two cells)
Nucleation Scrubber	$ 167,600
TESI Augmenter	17,800
Cooling Tower	125,000
Solids Treatment System	50,600
Piping	70,500
Pumps	10,000
Instruments	19,900
Electrical	52,500
Miscellaneous	24,750
	538,650
10% Contingency	54,500
	593,150
Engineering	112,500
	$ 705,650

ESTIMATED COST OF TESI EMISSION CONTROL SYSTEM FOR A STANDARD JET ENGINE TEST CELL

(J-79 Engine)

ITEM	MATERIAL COST	LABOR COST	FREIGHT COST	TOTAL
Nucleator System For One Test Cell				
Nucleation Scrubber - Modular construction 6 - 6'-8" modules x 27' high	25,000	2,500	800	28,300
Packing - 2" Tellerettes-Polypropylene 4032 ft^3	22,000	1,000	1,200	24,200
1" Tellerettes-Polypropylene 1056 ft^3	10,000	400	400	10,800
Spray Nozzles - Polypropylene Est. 100 nozzles	2,000	50	50	2,100
Scrubber Side Walls & Top Covers 2000 ft^2 FRP	17,000	3,500	500	21,000
Stationary Louvers - FRP 21' long x 6' wide Approx. 700 ft^2	2,200	600	400	3,200
Structural Supports - incl. Framework for module, Turning Vanes, Sump Steel, Pipe Supports, Support Legs, Side Plate Reinforcing ≈40,000#	56,000	20,000	2,000	78,000
All steel primed & epoxy coated				
Piping & Valves - incl. Manifolds for nozzles, Piping to and from cooling tower, Strainers. Carbon Steel Sch. 40	27,000	16,000	2,000	45,000

ESTIMATED COST OF TESI EMISSION CONTROL SYSTEM FOR A STANDARD JET ENGINE TEST CELL

(J-79 Engine)

ITEM	MATERIAL COST	LABOR COST	FREIGHT COST	TOTAL
Instrumentation - incl. Pressure Gauges Orifice Meter Temperature Indicators Level Indicator	3,600	4,000	400	8,000
Pumps - includes 5500 GPM at 110' TDH pumps w/drive Carbon Steel Wetted Parts 200 HP	6,000	500	500	7,000
Electrical - incl. Starter for one - 200 H.P. motor Wiring & conduit	13,500	10,000	500	24,000
Painting - incl. Touch-up and finish	1,400	10,000	100	11,500
TOTAL NUCLEATOR SYSTEM	185,700	68,550	8,850	263,100
Cooling System For Two Test Cells				
Cooling Tower to handle 840M BTU/hr approx. 90' x 60'	190,000	20,000	10,000	220,000
Misc. Structural Steel for ladder, platforms and supports	17,000	12,000	1,000	30,000
Instruments - incl. Pressure Gauges Temperature Indicators Level Indicators Alarms	5,000	5,500	500	11,000

ESTIMATED COST OF TESI EMISSION CONTROL SYSTEM FOR A STANDARD JET ENGINE TEST CELL

(J-79 Engine

ITEM	MATERIAL COST	LABOR COST	FREIGHT COST	TOTAL
Piping and Valves - incl. Strainers	11,500	8,000	500	20,000
Electrical - incl. Starters for tower fans Wiring and conduit	24,000	14,000	2,000	40,000
Painting - incl. Touch-up and finish	450	5,000	50	5,500
Site-Prep for Tower	1,500	8,000	-	9,500
TOTAL COOLING SYSTEM	249,450	72,500	14,050	336,000
Solids Treatment System For Two Test Cells				
Lime Feeder - 304 SS 40#/hr normal capacity	2,800	500	200	3,500
Mix Tank - 500 gallon (FRP)	500	50	50	600
Settling Tank - 5000 gallon (FRP)	4,800	500	200	5,500
Agitator for mix tank - 304 SS impeller and shaft	900	100	100	1,100
Rotary Vacuum Filter - 304 SS Wetted Parts 400 ft^2 surface incl. vacuum receiver and vacuum pump	75,000	3,000	2,000	80,000
Pumps -				
1 - 160 GPM @ 50' TDH	1,000	500	500	2,000
2 - 80 GPM @ 50' TDH	2,500	1,000	500	4,000
Mild Steel wetted parts				

ESTIMATED COST OF TESI EMISSION CONTROL SYSTEM FOR A STANDARD JET ENGINE TEST CELL

(J-79 Engine)

ITEM	MATERIAL COST	LABOR COST	FREIGHT COST	TOTAL
Piping & Valves - incl. All inter connecting piping between filter tower, and tanks. Carbon Steel	15,000	15,000	1,000	31,000
Instruments - incl. Pressure gauges 2 - Flow control loop Level control loop Alarms	6,000	6,000	800	12,800
Structural Steel - incl. Access platform for tanks Support for feeder	6,000	4,000	500	10,500
Electrical - incl. Starters for agitator - pumps Wiring & conduit	9,000	7,000	1,000	17,000
Painting - incl. touch-up and finish	450	5,000	50	5,500
Site Prep - incl. foundation for tanks and filter	1,000	5,000	-	6,000
TOTAL SOLIDS TREATMENT SYSTEM	124,950	47,650	6,900	179,500
TESI Augmenter For One Test Cell				
Augmenter tube consisting of a converging and diverging section with integral Quench Ring. 6' diameter x 12' long Shell Carbon Steel Quench Ring Stainless Steel	16,000	1,000	800	17,800

Note: Electrical costs do not include sub-station costs if required.

APPENDIX B

INFORMATION SOURCES

The following is a list of persons contacted during the course of this study who provided significant useful information. Their assistance is gratefully acknowledged.

Mr. Dominic Croce
Naval Air Engineering Center
Lakehurst, New Jersey 08733
(Coanda device, hush-house)

Major Peter S. Daly
Air Force Civil Engineering Center
Tyndall Air Force Base
Florida 32401
(Emissions)

Mr. Richard J. Keman
Code 610
Naval Air Rework Facility
Jacksonville Naval Air Station
Jacksonville, Florida 32212
(Nucleation scrubber, electrostatic precipitator)

Mr. Anthony Klarman
Code PE-71: AFK
Naval Air Propulsion Test Center
Trenton, New Jersey 08628
(Fuel additives)

Dr. Barbara Longley-Cook
Naval Air Rework Facility
North Island Naval Air Station
San Diego, California 92135
(Emissions)

Mr. Larry Mihalic
Naval Air Rework Facility
North Island Naval Air Station
San Diego, California 92135
(Emissions)

Mr. Don Munson
United Engineers and Constructors
100 Summer Street
Boston, Massachusetts 02110
(Electrostatic precipitator)

Mrs. Sarah H. O'Brien
Naval Air Rework Facility
Jacksonville Naval Air Station
Jacksonville, Florida 32212
(Nucleation scrubber, electrostatic precipitator)

Lt. Alfred Roth
Wright-Patterson Air Force Base
Dayton, Ohio 45433
(Fuel additives)

Mr. R. J. Salazar
Naval Air Rework Facility
Alameda Naval Air Station
Alameda, California 94501
(Emissions, test cell operation)

Dr. Wayne Sule
Naval Air Engineering Center
Lakehurst, New Jersey 08733
(Thermal converter, fuel atomization)

Dr. Aaron J. Teller
Teller Environmental Systems, Inc.
10 Faraday Street
Worchester, Massachusetts 01605
(Nucleation scrubber)

Mr. Ed Thomas
Air Transport Association
1709 New York Avenue, N.W.
Washington, D.C. 20006
(Test cell operations)

Mr. James A. Tomich
Bay Area Air Pollution Control District
939 Ellis Street
San Francisco, California 94109
(Emissions)

Capt. Dennis F. Naugle
Air Force Civil Engineering Center
Tyndall Air Force Base
Florida 32401
(Emissions)

Mr. W. W. Wilcox
United Airlines Maintenance Base
South San Francisco
California 94104
(Fuel additives)

TECHNICAL REPORT DATA
(Please read Instructions on the reverse before completing)

1. REPORT NO. EPA 340/1-78-001a	2.	3. RECIPIENT'S ACCESSION NO.
4. TITLE AND SUBTITLE JET ENGINE TEST CELLS — EMISSIONS AND CONTROL MEASURES: PHASE 1		5. REPORT DATE January 1978
		6. PERFORMING ORGANIZATION CODE EPAOE; Project 7203
7. AUTHOR(S) D. E. Blake		8. PERFORMING ORGANIZATION REPORT NO. ACUREX FINAL REPORT 76-218 1978 Revision
9. PERFORMING ORGANIZATION NAME AND ADDRESS Acurex Corporation/Aerotherm Division 485 Clyde Avenue Mountain View, California 94042		10. PROGRAM ELEMENT NO.
		11. CONTRACT/GRANT NO. 68-01-3158, Task 4
12. SPONSORING AGENCY NAME AND ADDRESS U.S. Environmental Protection Agency Division of Stationary Source Enforcement Washington, D.C. 20460		13. TYPE OF REPORT AND PERIOD COVERED Final - 8-13-76 — 9-30-76
		14. SPONSORING AGENCY CODE

15. SUPPLEMENTARY NOTES

Stationary Source Enforcement Series

16. ABSTRACT

This report discusses the current state of the art of pollutant emission measurement and cleanup technology related to military jet engine test cells. Considerable emissions data from jet engines is available, but data from test cell stacks is sparse. Gaseous emission data for the major pollutant species (CO, NO, NO_2, SO_2, SO_3) are reliable; particulate, opacity, and unburned hydrocarbon data are less so.

The five types of test cell cleanup methods that have been experimentally evaluated — electrostatic precipitator, nucleation scrubber, fuel additives, thermal converter, and fuel atomization improvement — are described in detail. Other, less promising methods are briefly discussed. Several methods are quite effective in reducing test cell emissions. Fuel additives are effective in reducing test cell plume opacity. Capital and operating cost data on these methods are presented. For the nucleation scrubber, the best-developed cleanup technology, three cost estimates from different sources are given.

17. KEY WORDS AND DOCUMENT ANALYSIS

a. DESCRIPTORS	b. IDENTIFIERS/OPEN ENDED TERMS	c. COSATI Field/Group
• Jet engines • Emission exhaust gases • Jet engine test cells	Enforcement Jet engine test cells Air facilities	13B 14D 01E

18. DISTRIBUTION STATEMENT Release unlimited	19. SECURITY CLASS *(This Report)* Unclassified	21. NO. OF PAGES
	20. SECURITY CLASS *(This page)* Unclassified	22. PRICE

EPA Form 2220-1 (9-73)