United States
Environmental Protection
Agency

Office of Air Quality
Planning and Standards
Washington, D.C. 20460

EPA-340/1-85-014a
October 1984

Stationary Source Compliance Series

EPA

Utility FGD Survey October 1983-September 1984

Volume 1: Categorical Summaries of FGD Systems

EPA-340/1-85-014a

Utility FGD Survey
October 1983 - September 1984

Volume 1: Categorical Summaries of FGD Systems

M. T. Melia, R. S. McKibben,
and B. W. Pelsor

PEDCo Environmental, Inc.
11499 Chester Road
Cincinnati, Ohio 45246

EPA Contract No. 68-02-3963
Work Assignment No. 46

EPA Project Manager: John Busik
EPA Work Assignment Manager: Sonya M. Stelmack

U.S. ENVIRONMENTAL PROTECTION AGENCY
Stationary Source Compliance Division
Office of Air Quality Planning and Standards
Washington, D.C. 20460

October 1984

ACKNOWLEDGMENT

The EPA-SSCD Project Officer and authors of this report appreciate the assistance provided by Norman Kaplan, the Project Officer for the U.S. Environmental Protection Agency (Industrial Environmental Research Laboratory, Research Triangle Park, North Carolina) for the Flue Gas Desulfurization Information System (FGDIS), in updating and maintaining the data base and his suggestions on the content and format of the survey report (and project summary) and on other project activities.

DISCLAIMER

This report was prepared for the U.S. Environmental Protection Agency by PEI Associates, Inc., Cincinnati, Ohio, under Contract No. 68-02-3963, Work Assignment No. 46. The contents of this report are reproduced herein as received from PEI Associates, Inc. The opinions, findings, and conclusions expressed are those of the authors and not necessarily those of the U.S. Environmental Protection Agency. Mention of trade names or commercial products is not intended to constitute endorsement or recommendation for use. Copies of this report are available from the National Technical Information Services, 5285 Port Royal Road, Springfield, Virginia 22161.

NOTICE

The data in this information transfer document are supplied voluntarily by utility representatives, flue gas desulfurization (FGD) system suppliers and designers, regulatory agencies, and others. The accuracy or completeness of the information contained herein is not warranted by the Stationary Source Control Division of EPA or the designated contractor. Portions of the work upon which this publication is based were performed pursuant to Contract Nos. RP982-32 (Electric Power Research Institute) and 68-02-3173 (Environmental Protection Agency).

A project summary will be distributed to organizations and individuals indicating a specific interest in the field of FGD technology. Interested parties can be added to the Project Summary mailing list by contacting Carolyn Fowler at the Industrial Environmental Research Laboratory (919/541-2915) or the secretary of the Emission and Effluent Technology Branch of the EPA (919/541-2578). Copies of preceding issues of this report through December 1981 can be purchased from the National Technical Information Service, Springfield, Virginia 22161, (703) 487-4650. Succeeding issues of this report can be purchased from the Electric Power Research Institute Research Reports Center, P.O. Box 50490, Palo Alto, California 94303, (415) 965-4081.

This report summarizes the FGD system design and performance data contained in a computerized data base known as the Flue Gas Desulfurization Information System (FGDIS). Access to the FGDIS is available through the National Technical Information Service (NTIS) for a nonprofit user's fee. Users also have access to additional design and performance data stored within the data base that cannot conveniently be printed in this report. Direct access to the data base affords analyses of the data (e.g., averages, maxima, minima, and standard deviations of various parameters), the use of simple mathematical functions, the capability of virtually unlimited data cross-referencing, and data tabulation to fit the user's individual information needs. An FGDIS users manual is available from NTIS (NTIS No. PB 83 146 209).

Requests for further information concerning the FGDIS and periodic FGDIS training seminars should be directed to Michael Melia or Skip Jones, PEI Associates, Inc. (513/782-4700). Information concerning access to the FGDIS can be obtained from Walter Finch, NTIS, 5285 Port Royal Road, Springfield, Virginia 22161 (703/487-4808).

USE OF THIS REPORT

This report is the first fully compiled edition since the July 1982-March 1983 issue released in April 1984, which contains more complete design and performance data since the FGS system startup dates. This report supersedes all previous issues. Volume 1 includes several categorical summaries of key data and the appendix sections. Volume 2, Parts 1 and 2 contain all available design and performance data for operational FGD systems (Section 13).

The Executive Summary contains the number and capacity of FGD systems as of the end of December 1984, future (December 1993) projections of controlled and uncontrolled generating capacity, and unit-by-unit summaries of status changes (e.g., contract awarded, under construction, or operational) and performance and status highlights for the period.

Appendix sections include definitions, a table of unit notation and simplified process flow diagrams, as well as data on terminated FGD systems, particle scrubbers and Japanese FGD systems.

ABSTRACT

The Utility FGD Survey report, which is generated by a computerized data base system, represents a survey of operational and planned domestic utility flue gas desulfurization (FGD) systems. The three volume set summarizes information contributed by the utility industry, system and equipment suppliers, system designers, research organizations, and regulatory agencies. The data cover system design, fuel characteristics, operating history, and actual system performance. Also included is a unit-by-unit discussion of problems and solutions associated with the boilers, scrubbers, and FGD systems.

The development status (operational, under construction, or in the planning stages), system supplier, process, waste disposal practice, and regulatory class are tabulated alphabetically by utility company. Simplified process flow diagrams of FGD systems, definitions, and a glossary of terms are attached to the report. Current data for domestic FGD systems show 124 systems in operation, 25 systems under construction, and 68 systems planned. The current FGD-controlled capacity in the United States is 47,255 MW.

CONTENTS

		Page
Acknowledgment		ii
Notice		iii
Use of This Report		iv
Abstract		v
Tables and Figures		viii
Executive Summary		ix
Highlights		xx
Section 1	Summary List of FGD Systems	1-1
Section 2	Status of FGD Systems	2-1
Section 3	Summary of FGD Systems by Company	3-1
Section 4	Summary of FGD Systems by System Supplier	4-1
Section 5	Summary of FGD Systems by Process	5-1
Section 6	Summary of Operational FGD Systems by Process and Unit	6-1
Section 7	Summary of End-Product Disposal Practices for Operational FGD Systems	7-1
Section 8	Summary of FGD Systems in Operation	8-1
Section 9	Summary of FGD Systems Under Construction	9-1
Section 10	Summary of Contract-Awarded FGD Systems	10-1
Section 11	Summary of Planned FGD Systems	11-1
Section 12	Total FGD Units and Capacity (MW) Installed, by Year	12-1
Appendix A	Definitions	A-1
Appendix B	Table of Unit Notation	B-1
Appendix C	FGD Process Flow Diagram	C-1

(Continued)

APPENDIX (continued)

		Page
Appendix D	Design and Performance Data for Operational Particle Scrubber	
	Commonwealth Edison	
	Will County 1	D-1
	Minnesota Power & Light	
	Clay Boswell 3	D-27
	Syl Laskin 1	D-30
	Syl Laskin 2	D-34
	Montana-Dakota Utilities	
	Lewis & Clark 1	D-38
	Pacific Power & Light	
	Dave Johnston 4	D-42
	Potomac Electric Power	
	Dickerson 1	D-45
	Dickerson 2	D-48
	Dickerson 3	D-51
	Public Service of Colorado	
	Arapahoe 4	D-58
	Cherokee 1	D-62
	Cherokee 4	D-65
	Valmont 5	D-68
	Southwestern Public Service	
	Harrington 1	D-75
Appendix E	Design and Performance Data for Operational Foreign FGD Systems	E-1
Appendix F	Design and Performance Data for Terminated FGD Systems	F-1

TABLES

Number		Page
1	Number and Total Capacity of FGD Systems	ix
2	Summary of Status Changes, October 1983 - September 1984	xi
3	Power Generation Sources: Present and Future	xiii
4	Power Production by Source	xiii
5	FGD-Controlled Generating Capacity: Present and Future	xvi
6	Summary of FGD Systems by Process	xvii
7	Categorical Results of the Reported and Adjusted Capital and Annual Costs for Operational FGD Systems	xviii

FIGURES

Number		Page
1	Computerized Data Base Structure Diagram	x
2	History of Utility Projections for Operational, Under Construction, and Planned FGD Capacity - December 1970 through September 1984	xiv
3	Actual and Projected Coal-Fired Generating Capacity and FGD Capacity, 1984	xv

EXECUTIVE SUMMARY

This report is prepared by PEI Associates, Inc., under contract to the Stationary Source Control Division of the U.S. Environmental Protection Agency in conjunction with the Industrial Environmental Research Laboratory/Research Triangle Park of the U.S. Environmental Protection Agency. It is generated by a computerized data base system, the structure of which is illustrated in Figure 1.

Table 1 summarizes the status of flue gas desulfurization (FGD) systems in the United States as of the end of September 1984. Table 2 lists the units on which the status has changed during the October 1983-September 1984 period. The units included in the figures presented in Table 1 are identified in Table 3.

TABLE 1. NUMBER AND TOTAL CAPACITY OF FGD SYSTEMS

Status	No. of units	Total controlled capacity,[a] MW	Equivalent scrubbed capacity,[b] MW
Operational	124	50,870	47,255
Under construction	25	14,656	14,335
Planned:			
Contract awarded	15	9,248	9,190
Letter of intent	3	2,500	2,500
Requesting/evaluating bids	4	1,926	1,926
Considering only FGD systems for SO_2 control	46	27,512	26,869
TOTAL	217	106,712	102,075

[a]Summation of the gross unit capacities (MW) brought into compliance by the use of FGD systems, regardless of the percentage of the flue gas scrubbed by the FGD system(s).

[b]Summation of the effective scrubbed flue gas capacities in equivalent MW, based on the percentage of flue gas scrubbed by the FGD system(s).

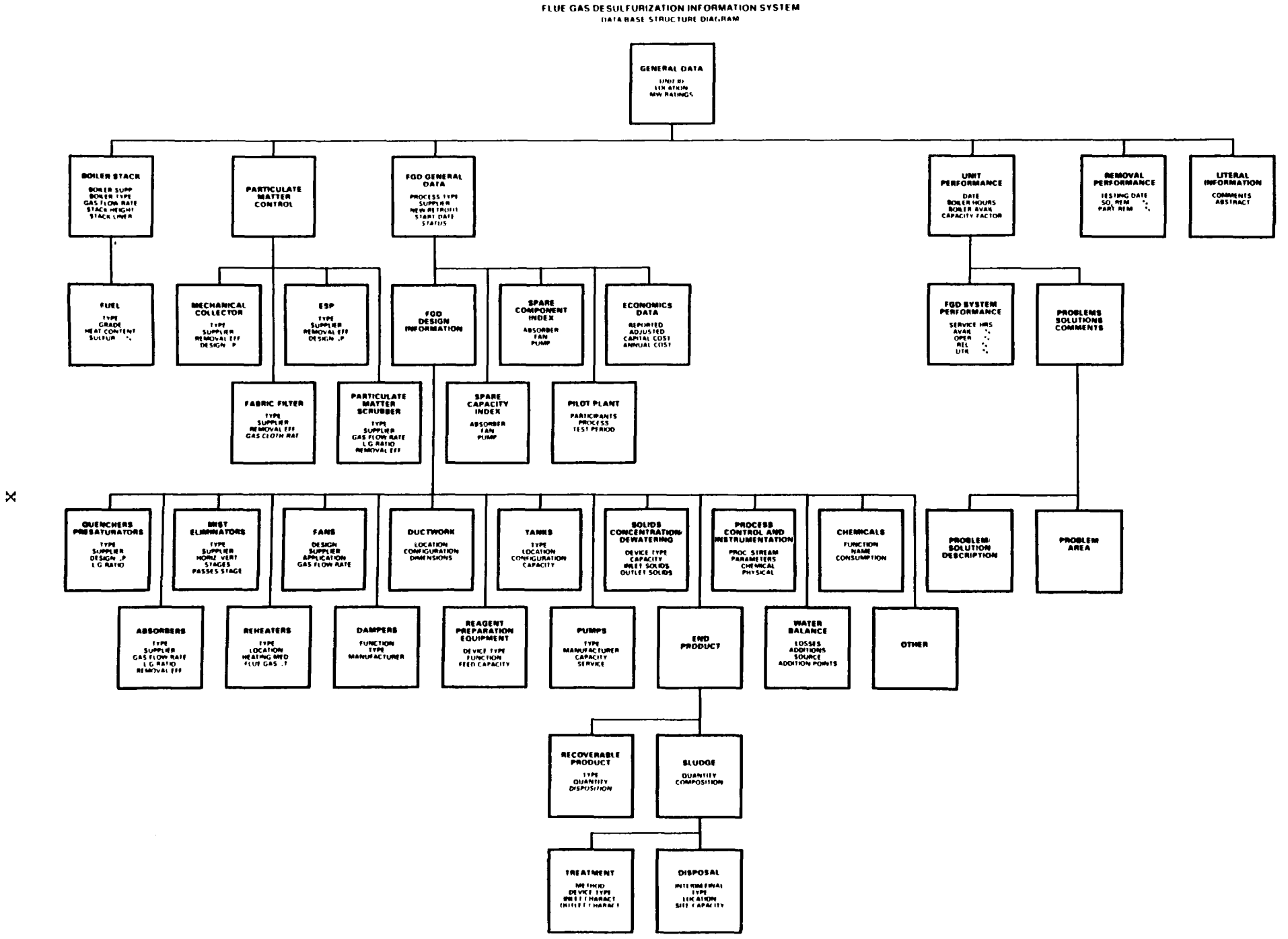

Figure 1. Computerized data base structure diagram.

TABLE 2. SUMMARY OF FGD SYSTEM STATUS CHANGES, OCTOBER 1983-SEPTEMBER 1984

FGD status report September 30, 1983	Operational		Under construction		Contract awarded		Letter of intent		Requesting/ eval. bids		Considering FGD		Total	
	No. 116	MW[a] 43,206[b]	No. 26	MW[a] 14,609[b]	No. 21	MW[a] 12,635	No. 7	MW[a] 6,060	No. 3	MW[a] 1,840[b]	No. 41	MW[a] 23,549[b]	No. 214	MW[a] 101,899[b]
Arizona Public Service														
Cholla 5											+1	126	+1	126
Big Rivers Electric														
D.B. Wilson 1	+1	440	-1	440										
Boston Edison														
New Boston 1									+1	388			+1	388
New Boston 2									+1	388			+1	388
Central Illinois Light														
Duck Creek 2											-1	450	-1	450
Cincinnati Gas & Electric														
Zimmer 1											+1	1,386	+1	1,386
Colorado Ute Electric														
Craig 3	+1	447	-1	447										
Deseret Generating & Transmission														
Bonanza 1	+1	410	-1	410										
General Public Utilities														
Coal 1									-1	690	+1	690		
Jersey Central Power & Light														
N/D 1											-1	625	-1	625
Los Angeles Dept. of Water & Power														
Intermountain 2			+1	820	-1	820								
Lower Colorado River Authority														
Fayette Power Project 3			+1	451	-1	451								
Fayette Power Project 4											+1	451	+1	451
Middle South Utilities														
Arkansas Lignite 5							-1	890					-1	890
Arkansas Lignite 6							-1	890					-1	890
Unassigned 1							-1	890					-1	890
Unassigned 2							-1	890					-1	890
Montana Power														
Colstrip 3	+1	778	-1	778										

TABLE 2 (continued)

FGD status report September 30, 1983	Operational		Under construction		Contract awarded		Letter of intent		Requesting/ eval. bids		Considering FGD		Total	
	No. 116	MW[a] 43,206[b]	No. 26	MW[a] 14,609[b]	No. 21	MW[a] 12,635	No. 7	MW[a] 6,060	No. 3	MW[a] 1,840[b]	No. 41	MW[a] 23,549[b]	No. 214	MW[a] 101,899[b]
New York State Electricity & Gas														
Somerset	+1	625	-1	625										
Orlando Utilities Commission														
C. H. Stanton 1			+1	465	-1	465								
Pacific Power & Light														
Jim Bridger 2			+1	550	-1	550								
Wyodak 1					+1	330					-1	330		
Platte River Power Authority														
Rawhide 1	+1	279	-1	279										
Public Service Company of Colorado														
Pawnee 2											+1	500	+1	500
San Antonio Public Service														
N/D 3											+1	500	+1	500
N/D 4											+1	500	+1	500
Seminole Electric														
Seminole 2	+1	620	-1	620										
South Carolina Public Service														
Cross 2	+1	450	-1	450										
Southern Indiana Gas & Electric														
A.B. Brown 2			+1	265	-1	265								
Southwestern Electric Power														
Dolet Hills 1			+1	720	-1	720								
Southwestern Public Service														
South Plains 1											+1	572	+1	572
West Texas Utilities														
Oklaunion 1			+1	504	-1	504								
Total	124	47,255	25	14,335	15	9,190	3	2,500	4	1,926	46	26,869	217	102,075

[a] Equivalent scrubbed capacity.

[b] This value was modified slightly to reflect a MW correction.

Figure 2 presents a historic breakdown of utility status reports for operational, under-construction, and planned FGD capacity. The operating FGD capacity has grown significantly each year since 1972. Since 1977 the capacity under construction has been fairly stable. The planned capacity reported by the utilities has increased each year in the past until 1980, when it reached its peak, and has dropped sharply since that time.

Figure 3 presents a comparison of actual coal-fired generating capacity and FGD capacity from 1975 through 1984 and projections thereafter through 1992. Although the retirement of older units is taken into account in these plots, such retirements affect only the overall coal-fired capacity rate because FGD-controlled capacity represents primarily new power generating capacity. This accounts for the slightly greater slope of the lower line, which depicts FGD-controlled capacity.

Current projections estimate the total power-generating capacity of the U.S. electric utility industry will be 791 GW by the end of 1992.[6] (This value reflects the loss resulting from the retirement of older units, which is considered to be approximately 3.24 GW by the end of 1992.[7]) Approximately 345 GW, or 44 percent of the 1992 total, is estimated to be produced by coal-fired units. Table 3 presents a distribution of present (December 1983) and future (December 1992) power generation sources.

TABLE 3. POWER GENERATION SOURCES: PRESENT AND FUTURE[6,7]

	Coal	Nuclear	Oil	Hydro	Gas	Other	Total generating capacity, GW
December 1983	43%	11%	20%	12%	13%	1%	671
December 1992	44%	16%	17%	11%	11%	1%	791

It is interesting to note that the breakdown for the actual power produced by these sources during the past year (Table 4) differs appreciably, especially for coal- and oil-fired sources, from the power generating capacity shown in Table 3. This is due to the effect of the changing economy on the operation of various types of powerplants.

TABLE 4. POWER PRODUCTION BY SOURCE[8]

	Coal	Nuclear	Oil	Hydro	Gas	Other	Total energy generated, GWh
January-December 1983	55%	13%	6%	14%	12%	0	2,308,746

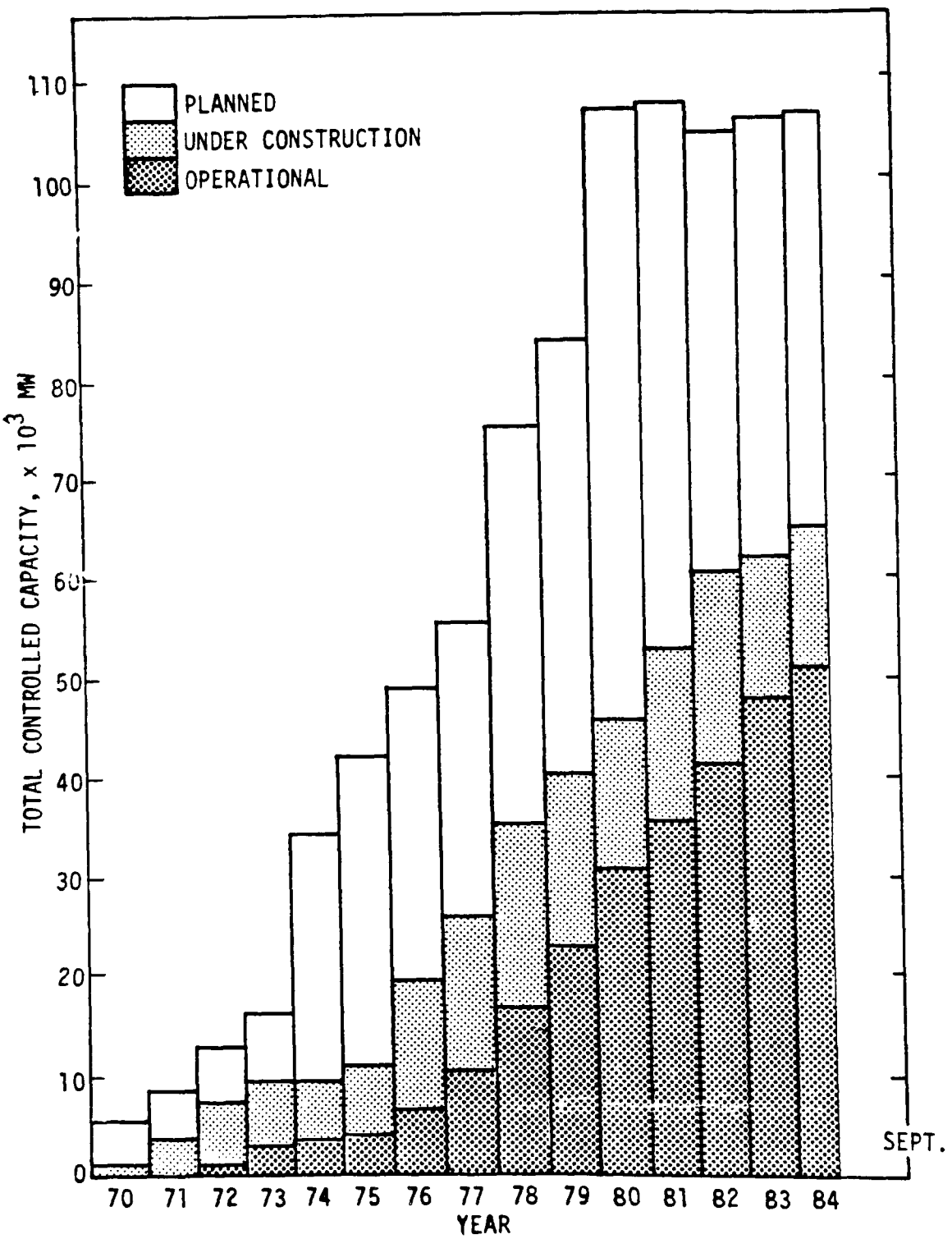

Figure 2. History of utility FGD status reports for operational, under construction, and planned FGD capacity - December 1970 through September 1984.

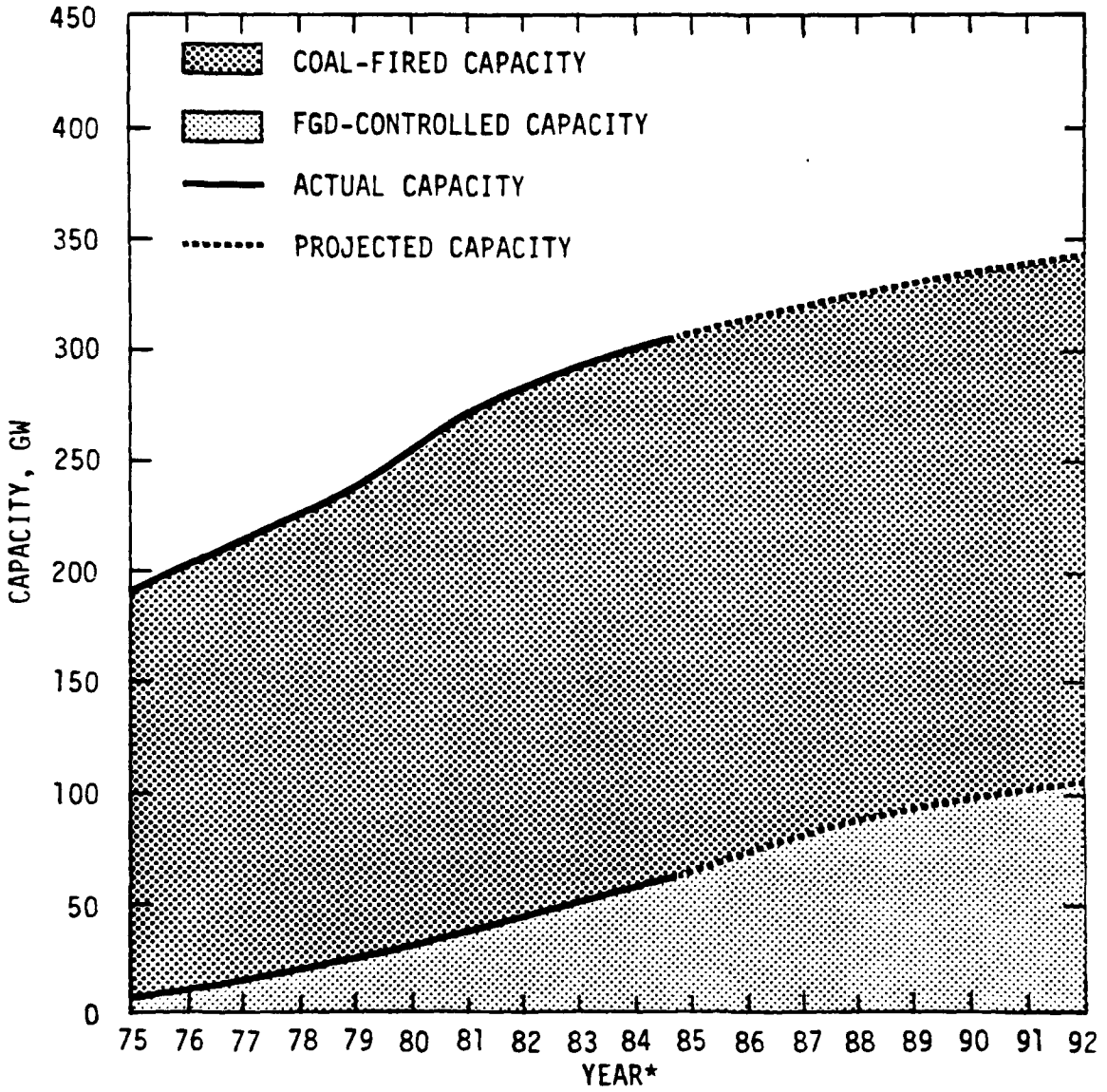

Figure 3. Actual and projected coal-fired generating capacity and FGD capacity, 1984.[1-7]

Based on known commitments of utilities to FGD (as presented in Table 1) and other coal-fired generating capacity expected to be required to incorporate FGD (Figure 3), current and projected percentages of electrical generating capacity controlled by FGD are shown in Table 5.

TABLE 5. FGD-CONTROLLED GENERATING CAPACITY: PRESENT AND FUTURE[1,6]

	Coal-fired generating capacity controlled by FGD, %	Total generating capacity controlled by FGD, %
September 1984[a]	17.2	7.4
December 1992	31.0	13.6

[a]The September 1984 FGD capacity figures are based on reports by utilities. The figures used for the total generating capacity and the December 1992 coal-fired generating capacity are based on December 1982 DOE projected figures.

Table 6 shows both the current (September 1984) and projected (December 1999) breakdown of throwaway-product FGD systems versus salable-product FGD systems as a percentage of the total known commitments to FGD.

Table 7 presents categorical FGD system cost data in common 1981 dollars.

TABLE 6. SUMMARY OF FGD SYSTEMS BY PROCESS
(percentage of total MW)

Process	Byproduct	September 1984	December 1999	December 1999 (Normalized)[a]
Throwaway-product process				
Wet systems				
Lime		23.9	13.2	16.0
Limestone		46.7	43.1	52.2
Lime/alkaline flyash		7.7	4.3	5.2
Limestone/alkaline flyash		3.2	1.5	1.8
Dual alkali		3.3	2.2	2.7
Sodium carbonate		3.2	3.1	3.7
NA[b]		-	1.8	2.1
Dry systems				
Lime		4.8	6.2	7.5
Sodium carbonate		0.9	0.4	0.5
NA[b]		-	2.2	2.7
Dry injection				
Trona/dry injection		-	0.5	0.6
Saleable-product process				
Aqueous carbonate/ spray drying	Elemental sulfur	0.2	0.1	0.1
Limestone	Gypsum	0.4	1.4	1.7
Magnesium oxide	Sulfuric acid	1.5	0.7	0.9
Wellman Lord	Sulfuric acid	4.2	1.9	2.3
Process undecided		-	17.4	-
TOTAL		100.0	100.0	100.0

[a]The effect of those systems listed as "Process undecided" is removed.

[b]NA - Not available (These systems are committed to a throwaway-product process; however, the actual process is unknown at this time.)

TABLE 7. CATEGORICAL RESULTS OF THE REPORTED AND ADJUSTED CAPITAL AND ANNUAL COSTS FOR OPERATIONAL FGD SYSTEMS

	Reported						Adjusted					
	Capital			Annual			Capital			Annual		
	Range, $/kW	Average, $/kW	σ	Range, mills/kWh	Average, mills/kWh	σ	Range, $/kW	Average, $/kW	σ	Range, mills/kWh	Average, mills/kWh	σ
All	23.7-213.6	80.2	44.3	0.1-13.0	2.3	2.8	38.3-282.2	118.8	58.1	1.6-20.8	7.6	4.1
New	23.7-213.6	80.4	46.1	0.1- 5.5	1.7	1.8	38.3-263.9	110.8	48.4	1.6-14.6	6.8	3.2
Retrofit	29.4-157.4	79.7	39.4	0.5-13.0	4.5	4.4	60.4-282.2	139.3	73.8	4.3-20.8	9.7	5.3
Saleable	132.8-185.0	153.1	20.6	13.0-13.0	13.0	0.0	254.6-282.2	271.6	12.1	16.7-20.8	18.1	1.9
Throwaway	23.7-213.6	75.8	41.5	0.1-11.3	2.1	2.4	38.3-263.9	110.9	47.6	1.6-17.6	7.0	3.4
Alkaline flyash/lime	43.4-173.8	93.9	44.0	0.4- 5.4	2.1	1.9	52.5-184.4	122.8	51.4	3.0-14.1	7.2	3.8
Alkaline flyash/ limestone	49.3- 49.3	49.3	0.0	0.8- 0.8	0.8	0.0	102.6-102.6	102.6	0.0	5.4- 5.4	5.4	0.0
Dual alkali	47.2-174.8	97.8	55.3	1.3- 1.3	1.3	0.0	87.8-263.9	146.7	82.9	5.0-13.9	8.7	3.8
Lime	29.4-213.6	81.8	43.7	0.3-11.3	3.2	2.7	60.4-210.0	116.5	44.2	4.0-17.6	8.1	3.6
Limestone	23.7-170.4	67.9	37.2	0.1- 7.8	1.6	2.2	38.3-194.3	98.9	44.0	1.6-14.6	6.1	3.1
Sodium carbonate	42.9-100.8	69.2	26.6	0.2- 0.5	0.4	0.1	87.1-150.9	110.9	26.4	5.8- 7.4	6.4	0.7
Wellman Lord	132.8-185.0	153.1	20.6	13.0-13.0	13.0	0.0	254.6-282.2	271.6	12.1	16.7-20.8	18.1	1.9

HIGHLIGHTS: OCTOBER 1983-SEPTEMBER 1984

The following paragraphs highlight FGD system developments during the period of October 1983 through September 1984.

Arizona Electric Power reported that the Apache 2 and 3 limestone FGD systems demonstrated high dependabilities during the months of October 1983 through July 1984. No major FGD-related problems were encountered.

Arizona Public Service announced plans to construct a new unit, Cholla 5, in Joseph City, Arizona. The 375-MW (gross) pulverized-coal-fired boiler (supplied by Combustion Engineering) will have an FGD system for the control of SO_2 emissions. The unit is scheduled to start up in 1997.

Atlantic City Electric announced that they have postponed indefinitely their plans to install Cumberland 1 in Milville, New Jersey, because power demand has not met projections.

Basin Electric Power reported that the limestone FGD systems on Laramie River 1 and 2 achieved high dependabilities during most of the period. Minor FGD-related problems encountered included maintenance on welds in the quencher section on Unit 2 and repairs to the absorber recycle and feed tank mixers on both units.

Big Rivers Electric reported that initial operation of the FGD system on D. B. Wilson 1 in Centertown, Kentucky, began in September 1984. This 440-MW (gross) unit fires coal with an average sulfur content of 3.75 percent. The emission control system consists of an ESP followed by an M. W. Kellogg wet-lime FGD system.

New Boston 1 and 2 of Boston Edison in Boston, Massachusetts, are being converted from oil- to coal-fired units. The 388-MW (gross) Babcock and Wilcox units will fire subbituminous coal with an average sulfur content of 2.3 percent and heat content of 12,600 Btu/lb. Bids are currently being requested/evaluated for a wet-limestone FGD system with salable gypsum byproduct recovery. Particulate control will be provided by ESP's, and the flue gas will exit via a 359-ft acid-brick-lined stack. Forced oxidation will be

utilized for sludge treatment. New Boston 1 and 2 are scheduled to start up in October 1987 and June 1988 respectively.

Cajun Electric Power announced that their plans to install Oxbox 1 in De Soto Parish, Louisiana, have been postponed indefinitely because power demand has not met projections.

Central Illinois Light reported that the Duck Creek 1 limestone FGD system demonstrated high dependabilities during the period of October 1983 through July 1984, except during May, when the FGD system was down for general inspection and maintenance. The utility also announced that they had cancelled plans for the construction of a second unit at the Duck Creek Station in Canton, Illinois, because of a reduction in projected power demand.

Central Illinois Public Service reported that the Newton 1 dual-alkali FGD system demonstrated high dependabilities during the period of October 1983 through August 1984, except for June, when the FGD system was down because of repairs to the absorber tower lining.

Cincinnati Gas and Electric announced plans to convert the Zimmer 1 nuclear facility in Moscow, Ohio, to coal. The retrofit 1386-MW (gross) coal-fired boiler will have an FGD system for control of SO_2 emissions. The unit is scheduled to start up in 1991.

Colorado Ute Electric indicated that initial operation of the FGD system on Craig 3 in Craig, Colorado, commenced in June 1984. This 447-MW (gross) unit fires coal with an average sulfur content of 0.45 percent. Babcock and Wilcox supplied this lime/spray drying process. A fabric filter is used for particulate removal.

Cooperative Power, not Buckeye Power as previously reported, plans to construct a 750-MW (gross) unit in Ohio. The facility has not yet been named, nor has a site been finalized. This unit is expected to fire Ohio coal. A wet-limestone FGD system will control SO_2 emissions, and ESP's will control particulate emissions. Initial startup is tentatively scheduled for 1994.

Deseret Generating and Transmission reported that initial operation of the FGD system on Bonanza 1 in Vernal, Utah, began in September 1984. This 410-MW (gross) unit fires coal with an average sulfur content of 0.5 percent. Combustion Engineering supplied the wet-limestone FGD system. A fabric filter supplied by Ecolaire is used to control particulate emissions. The unit operates in a closed-water-loop mode and the sludge is disposed of in an onsite landfill.

General Public Utilities, not Jersey Central Power & Light as previously reported, will be the operating utility of the 690-MW (gross) Coal 1 unit (reported earlier as 625 MW). The unit and FGD system are still in the planning stage. The coal-fired (3.5 percent sulfur) unit is scheduled to start up sometime in 1993.

Iowa Electric Light and Power announced that they are postponing indefinitely their plans to install Guthrie County 1 in Panora, Iowa, because power demand has not met projections.

Kentucky Utilities announced that they have postponed indefinitely their plans to install a second unit at the Hancock station in Hawesville, Kentucky, because of a reduction in projected power demand.

The Los Angeles Department of Water and Power reported that the FGD system on Intermountain 2 in Delta, Utah, is now under construction. Fabric filters will control particulate emissions from this 820-MW (gross) unit. The wet limestone FGD system will control SO_2 in the flue gas downstream from the particulate collection equipment. Flue gas reheat will be provided by in-line heat exchangers prior to the 710-foot stack. The fly ash-stabilized sludge will be disposed of on site at this closed-loop facility. The unit is expected to begin operations in July 1987.

The Lower Colorado River Authority reported that the Fayette Power Project 3 in La Grange, Texas, is now under construction. This lignite-fired 451-MW (gross) unit will be equipped with a wet-limestone FGD system designed to remove 90 percent of the SO_2. An ESP supplied by Flakt will control particulate emissions, and the cleaned flue gas will exit through a 535-ft acid-brick-lined stack. Sludge will be disposed of in an onsite landfill. The unit is expected to begin operations in November 1987. The utility also announced plans to construct a fourth unit at the Fayette Power Project Station in La Grange, Texas. This lignite-fired (1.7 percent sulfur, 4300 Btu/lb) boiler will also use a wet-limestone FGD system for SO_2 control and ESP's for particulate removal. Initial startup is scheduled for June 1990.

Middle South Utilities announced the cancellation of their plans to install Arkansas Lignite 5 and 6 and two other plants (name undecided), which were to be located in Louisiana. The utility has also announced that they have postponed indefinitely their plans to install Wilton 1 and 2 in Convent, Louisiana, because of a reduction in projected power demand.

Minnesota Power and Light reported that the Clay Boswell 4 lime/alkaline fly ash FGD system demonstrated high dependabilities during the months of October 1983 through June 1984. No major FGD-related problems were encountered.

Minnkota Power reported that the Milton R. Young 2 lime/alkaline fly ash FGD system demonstrated high dependability during the period of October 1983 through June 1984, except during December and January, when the system was shut down for repairs on the absorber spray recycle system.

Montana Power reported that initial operation of the FGD system on Colstrip 3 in Colstrip, Montana, began in October 1983. This 778-MW (gross) unit fires low-sulfur coal (0.7 percent sulfur, 8500 Btu/lb). The lime/alkaline fly ash FGD system was supplied by Bechtel/Montana Power. Particle scrubbers are used to control particulate emissions, and the system operates in a closed-water-loop mode. Flue gas exits via a 692-ft stack.

New York State Electric and Gas indicated that initial operation of the FGD system on Somerset 1 in Somerset, New York, began in September 1984. This 625-MW (gross) unit fires coal with an average sulfur content of 2.2 percent. A cold-side ESP with a design efficiency of 99.7 percent is used for particulate control. The wet-limestone FGD system was supplied by Peabody Process Systems. The system operates in a closed-water-loop mode, and the flue gas exits via a 450-ft stack. The sludge is dewatered and stabilized before being landfilled.

Nevada Power reported that the Reid Gardner 1, 2, 3, and 4 sodium carbonate FGD systems demonstrated high dependabilities during the months of October 1983 through August 1984. Only minor FGD-related problems were encountered.

Northern Indiana Public Service reported that the Schahfer 17 dual-alkali FGD system demonstrated high dependabilities during the months of October 1983 through July 1984. No major FGD-related problems were encountered.

Orlando Utilities Commission announced that the Combustion Engineering wet-limestone FGD system on C. H. Stanton 1 in Orlando, Florida, is now under construction. The utility will control particulate emissions with an ESP. Initial startup is scheduled for 1987.

Pacific Power and Light announced that construction of the retrofit wet sodium carbonate FGD system on Jim Bridger 2 began during the first quarter of 1984. The retrofit system will treat 2,700,000 acfm of flue gas from a 550-MW (gross) bituminous coal-fired boiler located in Rock Springs, Wyoming. A cold-side ESP is currently in operation for primary particulate control. The FGD system will operate in a closed-water-loop mode and flue gas will exit via a 500-ft stack. The FGD system is scheduled to start up in 1986. The utility also announced that a contract has been awarded to Joy

Manufacturing/Niro Atomizer for a retrofit lime/spray-drying system to control particulate matter and SO_2 emissions from Wyodak 1. This 330-MW (gross) mine mouth plant is located in Joliet, Wyoming, and has been operational since 1978. The FGD system is scheduled to start up in 1986.

The Platte River Power Authority reported that initial operation of the FGD system on Rawhide 1 in Wellington, Colorado, began in December 1983. The 279-MW (gross) unit supplied by Combustion Engineering fires low-sulfur coal (0.34 percent sulfur, 8500 Btu/lb). Joy Manufacturing/Niro Atomizer supplied the dry-lime FGD system for SO_2 control and the fabric filters for particulate removal. The system operates in a closed-water-loop mode, and sludge is disposed of in a landfill. Flue gas exits via a 505-ft stack.

Public Service Company of Colorado has plans for a new unit, Pawnee 2, to be located near Rush, Colorado. The 500-MW (gross) Babcock & Wilcox boiler will fire subbituminous coal (0.35 percent sulfur, 8290 Btu/lb). Fabric filters will be utilized for particulate removal and SO_2 emissions will be controlled through injection of dry trona. The trona will be pulverized and blown into the ductwork upstream of the fabric filter system for contact with flue gas on the duct and fabric filter surfaces. Flue gas will exit via a 500-ft stack. Initial startup of the unit is scheduled for 1990.

Public Service of New Mexico reported that the San Juan 1, 2, and 3 Wellman Lord FGD systems achieved high dependabilities for most of the period. Minor FGD-related problems encountered included replacing the absorber lining, repairing absorber trays, and replacing broken mist eliminator pads.

San Antonio Public Service reported plans to construct four new units (name and location undecided) instead of two, as previously reported. The lignite-fired (1 to 2 percent sulfur, 5600 Btu/lb) units will have a gross megawatt rating of 500 each and each will have a wet-limestone FGD system. The four units are scheduled to commence operations in 1993, 1995, 1999, and 2001, respectively.

Seminole Electric reported that initial operation of the FGD system on Seminole 2 in Palatka, Florida, began in September 1984. This 620-MW (gross) unit fires coal with an average sulfur content of 2.75 percent. The Peabody Process Systems wet-limestone FGD system is downstream of an ESP used for particulate control. The cleaned flue gas exits via a 675-ft stack. The utility also announced they have indefinitely postponed their plans to install Taylor 1 and 2 in Perry, Florida, because power demand has not met projections.

South Carolina Public Service reported that initial operation of the FGD system on Cross 2 in Cross, South Carolina, began in October 1983. This 450-MW (gross) unit fires coal with an average sulfur content of 1.8 percent. The wet-limestone scrubbing system, supplied by Peabody Process Systems, controls SO_2 emissions, and a cold-side ESP controls particulate emissions. The system operates in a closed-water-loop mode, and the cleaned flue gas exits via a 600-ft stack. The utility also announced that the Winyah 2 limestone FGD system achieved high dependabilities during the months of October 1983 through March 1984. Minor FGD-related problems encountered included cleaning the mist eliminators and repairing frozen slurry and water pipe lines.

South Mississippi Electric Power reported that the R. D. Morrow, Sr. 1 and 2 limestone FGD systems demonstrated high dependabilities during the period of October 1983 through July 1984 except for October. The R. D. Morrow, Sr. 1 FGD system was off line most of October for absorber ductwork repairs and the other FGD system was also unavailable that month because of scheduled maintenance.

Southern Indiana Gas and Electric announced that the FMC dual-alkali FGD system on A. B. Brown 2 in West Franklin, Indiana, is now under construction. The 265-MW (gross) unit will fire bituminous coal (3.35 percent sulfur, 11,100 Btu/lb). A cold-side ESP will provide primary particulate matter control. The cleaned flue gas will exit via a 498-ft stack. The system will operate in a closed-water-loop mode, and the sludge will be disposed of in an onsite landfill. Operation of the FGD is scheduled to start up in January 1985.

Southwestern Public Service reported that the wet-limestone FGD system on Dolet Hills 1 in Mansfield, Louisiana, is now under construction. Flue gas from this 720-MW (gross) lignite-fired unit will exit via a 525-ft stack, and the system will operate in a closed-water-loop mode. Initial startup is scheduled for December 1985.

Southwestern Public Service announced plans to construct a new unit, South Plains 1, to be located near Idalou, Texas. The 572-MW (gross) unit will burn low-sulfur Western coal and will be equipped with an FGD system to control SO_2 emissions. Initial startup is scheduled for 1990.

United Power Association reported that the Stanton 1A lime/spray drying FGD system demonstrated high dependabilities during the months of October 1983 through June 1984. No major FGD-related problems were encountered.

West Texas Utilities reported that the GEESI wet-limestone FGD system on Oklaunion 1 in Oklaunion, Texas, is now under construction. The 720-MW (gross) coal-fired unit will also be equipped with a Lodge-Cottrell rigid-frame, cold-side ESP for particulate control. The system will operate in a closed-loop mode, and the cleaned flue gas will exit via a 453-ft acid-brick-lined stack. Initial operations are scheduled for September 1986.

REFERENCES

1. U.S. Environmental Protection Agency. Flue Gas Desulfurization Information System (FGDIS). Computerized Data Base. Industrial Environmental Research Laboratory, Research Triangle Park, N.C. (Access to FGDIS can be obtained through Walter Finch, NTIS, 5285 Port Royal Road, Springfield, Virginia 22161).

2. U.S. Department of Energy. Inventory of Power Plants in the United States. Office of Utility Project Operations. DOE/RA-0001, December 1977.

3. U.S. Department of Energy. Inventory of Power Plants in the United States - December 1979. Energy Information Administration. DOE/EIA-0095(79), June 1980.

4. U.S. Department of Energy. Inventory of Power Plants in the United States - 1980 Annual. Energy Information Administration. DOE/EIA-0095(80), June 1981.

5. U.S. Department of Energy. Inventory of Power Plants in the United States - 1981 Annual. Energy Information Administration Office of Coal, Nuclear, Electric, and Alternate Fuels. DOE/EIA-0095(81), September 1982.

6. U.S. Department of Energy. Inventory of Power Plants in the United States - 1982 Annual. Energy Information Administration Office of Coal, Nuclear, Electric, and Alternate Fuels. DOE/EIA-0095(82), June 1983.

7. Personal communication from Mr. Skeer, Office of Policy Planning and Analysis, U.S. Department of Energy, August 1983.

8. U.S. Department of Energy. Energy Information Administration. Office of Coal, Nuclear, Electric, and Alternate Fuels. Electric Power Monthly, DOE/EIA-0226(83/01), January 1983.

SECTION 1
SUMMARY LIST OF FGD SYSTEMS

COMPANY NAME/ UNIT NAME	UNIT NO.	UNIT LOCATION		START-UP DATE	STATUS	REG CLASS
ALABAMA ELECTRIC						
TOMBIGBEE	2	LEROY	ALABAMA	9/78	1	D
TOMBIGBEE	3	LEROY	ALABAMA	6/79	1	D
ARIZONA ELECTRIC POWER						
APACHE	2	COCHISE	ARIZONA	8/78	1	C
APACHE	3	COCHISE	ARIZONA	6/79	1	C
ARIZONA PUBLIC SERVICE						
CHOLLA	1	JOSEPH CITY	ARIZONA	10/73	1	C
CHOLLA	2	JOSEPH CITY	ARIZONA	4/78	1	C
CHOLLA	4	JOSEPH CITY	ARIZONA	3/81	1	A
CHOLLA	5	JOSEPH CITY	ARIZONA	0/97	6	A
FOUR CORNERS	1	FRUITLAND	NEW MEXICO	11/79	1	C
FOUR CORNERS	2	FRUITLAND	NEW MEXICO	11/79	1	C
FOUR CORNERS	3	FRUITLAND	NEW MEXICO	11/79	1	C
FOUR CORNERS	4	FARMINGTON	NEW MEXICO	10/84	2	A
FOUR CORNERS	5	FARMINGTON	NEW MEXICO	10/84	2	A
ASSOCIATED ELECTRIC						
THOMAS HILL	3	MOBERLY	MISSOURI	10/82	1	B
ATLANTIC CITY ELECTRIC						
CUMBERLAND	1	MILLVILLE	NEW JERSEY	99/99	6	A
BASIN ELECTRIC POWER						
ANTELOPE VALLEY	1	BEULAH	NORTH DAKOTA	5/83	1	C
ANTELOPE VALLEY	2	BEULAH	NORTH DAKOTA	11/85	2	A
ANTELOPE VALLEY	3	BEULAH	NORTH DAKOTA	0/92	6	A
LARAMIE RIVER	1	WHEATLAND	WYOMING	7/80	1	A
LARAMIE RIVER	2	WHEATLAND	WYOMING	7/81	1	A
LARAMIE RIVER	3	WHEATLAND	WYOMING	11/82	1	A
BIG RIVERS ELECTRIC						
D.B. WILSON	1	CENTERTOWN	KENTUCKY	9/84	1	A
GREEN	1	SEBREE	KENTUCKY	12/79	1	D
GREEN	2	SEBREE	KENTUCKY	11/80	1	D
BOSTON EDISON						
NEW BOSTON	1	BOSTON	MASSACHUSETTS	10/87	5	
NEW BOSTON	2	BOSTON	MASSACHUSETTS	6/88	5	
CAJUN ELECTRIC POWER						
OXBOW	1	DE SOTO PARISH	LOUISIANA	99/99	3	B
CENTRAL ILLINOIS LIGHT						
DUCK CREEK	1	CANTON	ILLINOIS	7/76	1	D
CENTRAL ILLINOIS PUBLIC SERV						
NEWTON	1	NEWTON	ILLINOIS	9/79	1	D
CENTRAL MAINE POWER						
SEARS ISLAND	1	PENOBSCOT BAY	MAINE	11/95	6	A

1. OPERATIONAL UNITS
2. UNITS UNDER CONSTRUCTION
3. PLANNED - CONTRACT AWARDED
4. PLANNED - LETTER OF INTENT SIGNED
5. PLANNED - REQUESTING/EVALUATING BIDS
6. PLANNED - CONSIDERING ONLY FGD SYSTEMS FOR SO2 CONTROL
7. PLANNED - CONSIDERING FGD SYSTEMS; ALSO ALTERNATIVE METHODS

A. STANDARD(S) MORE STRINGENT THAN NSPS (6/79)
B. FEDERAL NSPS (6/79)
C. STANDARD(S) MORE STRINGENT THAN NSPS (12/71) BUT NOT MORE STRINGENT THAN NSPS (6/79)
D. FEDERAL NSPS (12/71)
E. STANDARD(S) EQUAL TO OR LESS STRINGENT THAN NSPS (12/71)

SECTION 1
SUMMARY LIST OF FGD SYSTEMS

COMPANY NAME/ UNIT NAME	UNIT NO.	UNIT LOCATION		START-UP DATE	STATUS	REG CLASS
CENTRAL POWER & LIGHT						
COLETO CREEK	2	FANNIN	TEXAS	10/93	3	B
CINCINNATI GAS & ELECTRIC						
EAST BEND	1	RABBIT HASH	KENTUCKY	0/89	6	A
EAST BEND	2	RABBIT HASH	KENTUCKY	3/81	1	C
ZIMMER	1	MOSCOW	OHIO	0/91	6	
COLORADO UTE ELECTRIC						
CRAIG	1	CRAIG	COLORADO	10/80	1	C
CRAIG	2	CRAIG	COLORADO	12/79	1	C
CRAIG	3	CRAIG	COLORADO	6/84	1	C
COLUMBUS & SOUTHERN OHIO ELEC						
CONESVILLE	5	CONESVILLE	OHIO	1/77	1	D
CONESVILLE	6	CONESVILLE	OHIO	6/78	1	D
COOPERATIVE POWER						
N/D	1	UNDECIDED	OHIO	0/94	6	B
COOPERATIVE POWER ASSOCIATION						
COAL CREEK	1	UNDERWOOD	NORTH DAKOTA	7/79	1	D
COAL CREEK	2	UNDERWOOD	NORTH DAKOTA	7/80	1	D
DELMARVA POWER & LIGHT						
DELAWARE CITY	1	DELAWARE CITY	DELAWARE	5/80	1	E
DELAWARE CITY	2	DELAWARE CITY	DELAWARE	5/80	1	E
DELAWARE CITY	3	DELAWARE CITY	DELAWARE	5/80	1	E
VIENNA	9	VIENNA	MARYLAND	0/95	6	B
DESERET GEN & TRANS						
BONANZA	1	VERNAL	UTAH	9/84	1	A
BONANZA	2	VERNAL	UTAH	0/92	6	A
DUQUESNE LIGHT						
ELRAMA	1-4	ELRAMA	PENNSYLVANIA	10/75	1	C
PHILLIPS	1-6	SOUTH HEIGHTS	PENNSYLVANIA	7/73	1	C
EAST KENTUCKY POWER						
J.K. SMITH	1	WINCHESTER	KENTUCKY	0/92	3	A
SPURLOCK	2	MAYSVILLE	KENTUCKY	12/82	1	C
FLORIDA POWER & LIGHT						
MARTIN	3	MARTIN COUNTY	FLORIDA	0/94	6	B
MARTIN	4	MARTIN COUNTY	FLORIDA	0/95	6	B
GENERAL PUBLIC UTILITIES						
COAL	1	FORKED RIVER	NEW JERSEY	0/93	6	B
COAL	2	UNDECIDED	UNDECIDED	0/97	6	B
GRAND HAVEN BRD OF LIGHT & PWR						
J.B. SIMS	3	GRAND HAVEN	MICHIGAN	5/83	1	B
GRAND RIVER DAM AUTHORITY						
GRDA	2	PRYOR	OKLAHOMA	3/85	2	B

1. OPERATIONAL UNITS
2. UNITS UNDER CONSTRUCTION
3. PLANNED - CONTRACT AWARDED
4. PLANNED - LETTER OF INTENT SIGNED
5. PLANNED - REQUESTING/EVALUATING BIDS
6. PLANNED - CONSIDERING ONLY FGD SYSTEMS FOR SO2 CONTROL
7. PLANNED - CONSIDERING FGD SYSTEMS; ALSO ALTERNATIVE METHODS

A. STANDARD(S) MORE STRINGENT THAN NSPS (6/79)
B. FEDERAL NSPS (6/79)
C. STANDARD(S) MORE STRINGENT THAN NSPS (12/71) BUT NOT MORE STRINGENT THAN NSPS (6/79)
D. FEDERAL NSPS (12/71)
E. STANDARD(S) EQUAL TO OR LESS STRINGENT THAN NSPS (12/71)

SECTION 1
SUMMARY LIST OF FGD SYSTEMS

COMPANY NAME/ UNIT NAME	UNIT NO.	UNIT LOCATION		START-UP DATE	STATUS	REG CLASS
HOOSIER ENERGY						
MEROM	1	MEROM	INDIANA	8/82	1	D
MEROM	2	MEROM	INDIANA	12/81	1	D
HOUSTON LIGHTING & POWER						
LIMESTONE	1	JEWITT	TEXAS	12/85	2	B
LIMESTONE	2	JEWITT	TEXAS	12/86	2	B
MALAKOFF	1	MALAKOFF	TEXAS	12/89	3	B
MALAKOFF	2	MALAKOFF	TEXAS	12/90	3	B
W.A. PARISH	8	THOMPSONS	TEXAS	10/82	1	B
INDIANAPOLIS POWER & LIGHT						
PATRIOT	1	PATRIOT	INDIANA	0/93	6	A
PATRIOT	2	PATRIOT	INDIANA	0/ 0	6	A
PATRIOT	3	PATRIOT	INDIANA	0/ 0	6	A
PETERSBURG	3	PETERSBURG	INDIANA	12/77	1	D
PETERSBURG	4	PETERSBURG	INDIANA	3/86	2	D
IOWA ELECTRIC LIGHT & PWR						
GUTHRIE CO.	1	PANORA	IOWA	99/99	4	B
JACKSONVILLE ELEC AUTHORITY						
ST.JOHNS RVR PWR PRK	1	JACKSONVILLE	FLORIDA	4/87	2	A
ST.JOHNS RVR PWR PRK	2	JACKSONVILLE	FLORIDA	10/88	2	A
KANSAS CITY POWER & LIGHT						
LA CYGNE	1	LA CYGNE	KANSAS	12/72	1	E
KANSAS POWER & LIGHT						
JEFFREY	1	WAMEGO	KANSAS	8/78	1	C
JEFFREY	2	WAMEGO	KANSAS	1/80	1	C
JEFFREY	3	WAMEGO	KANSAS	5/83	1	C
LAWRENCE	4	LAWRENCE	KANSAS	1/77	1	C
LAWRENCE	5	LAWRENCE	KANSAS	4/78	1	C
KENTUCKY UTILITIES						
GREEN RIVER	1-3	CENTRAL CITY	KENTUCKY	9/75	1	C
HANCOCK	1	HAWESVILLE	KENTUCKY	10/93	3	A
HANCOCK	2	HAWESVILLE	KENTUCKY	99/99	6	A
LAKELAND UTILITIES						
MCINTOSH	3	LAKELAND	FLORIDA	7/82	1	C
LOS ANGELES DEPT OF WTR & PWR						
INTERMOUNTAIN	1	DELTA	UTAH	7/86	2	A
INTERMOUNTAIN	2	DELTA	UTAH	7/87	2	A
LOUISVILLE GAS & ELECTRIC						
CANE RUN	4	LOUISVILLE	KENTUCKY	8/76	1	E
CANE RUN	5	LOUISVILLE	KENTUCKY	12/77	1	E
CANE RUN	6	LOUISVILLE	KENTUCKY	4/79	1	E
MILL CREEK	1	LOUISVILLE	KENTUCKY	12/80	1	E
MILL CREEK	2	LOUISVILLE	KENTUCKY	12/81	1	E
MILL CREEK	3	LOUISVILLE	KENTUCKY	8/78	1	D
MILL CREEK	4	LOUISVILLE	KENTUCKY	7/82	1	D
PADDY'S RUN	6	LOUISVILLE	KENTUCKY	4/73	1	E

1. OPERATIONAL UNITS
2. UNITS UNDER CONSTRUCTION
3. PLANNED - CONTRACT AWARDED
4. PLANNED - LETTER OF INTENT SIGNED
5. PLANNED - REQUESTING/EVALUATING BIDS
6. PLANNED - CONSIDERING ONLY FGD SYSTEMS FOR SO2 CONTROL
7. PLANNED - CONSIDERING FGD SYSTEMS; ALSO ALTERNATIVE METHODS

A. STANDARD(S) MORE STRINGENT THAN NSPS (6/79)
B. FEDERAL NSPS (6/79)
C. STANDARD(S) MORE STRINGENT THAN NSPS (12/71) BUT NOT MORE STRINGENT THAN NSPS (6/79)
D. FEDERAL NSPS (12/71)
E. STANDARD(S) EQUAL TO OR LESS STRINGENT THAN NSPS (12/71)

SECTION 1
SUMMARY LIST OF FGD SYSTEMS

COMPANY NAME/ UNIT NAME	UNIT NO.	UNIT LOCATION		START-UP DATE	STATUS	REG CLASS
LOUISVILLE GAS & ELECTRIC						
TRIMBLE COUNTY	1	BEDFORD	KENTUCKY	7/87	5	A
TRIMBLE COUNTY	2	BEDFORD	KENTUCKY	7/90	5	A
LOWER COLORADO RIVER AUTH						
FAYETTE POWER PROJECT	3	LA GRANGE	TEXAS	11/87	2	B
FAYETTE POWER PROJECT	4	LA GRANGE	TEXAS	6/90	6	B
MARQUETTE BOARD OF LIGHT & PWR						
SHIRAS	3	MARQUETTE	MICHIGAN	3/83	1	B
MICHIGAN SO CENTRAL PWR AGENCY						
PROJECT	1	LITCHFIELD	MICHIGAN	5/83	1	B
MIDDLE SOUTH UTILITIES						
WILTON	1	CONVENT	LOUISIANA	99/99	4	B
WILTON	2	CONVENT	LOUISIANA	99/99	4	B
MINNESOTA POWER & LIGHT						
CLAY BOSWELL	4	COHASSET	MINNESOTA	2/80	1	D
MINNKOTA POWER						
MILTON R. YOUNG	2	CENTER	NORTH DAKOTA	9/77	1	D
MONONGAHELA POWER						
PLEASANTS	1	WILLOW ISLAND	WEST VIRGINIA	12/78	1	D
PLEASANTS	2	WILLOW ISLAND	WEST VIRGINIA	10/80	1	D
MONTANA POWER						
COLSTRIP	1	COLSTRIP	MONTANA	9/75	1	D
COLSTRIP	2	COLSTRIP	MONTANA	5/76	1	D
COLSTRIP	3	COLSTRIP	MONTANA	10/83	1	A
COLSTRIP	4	COLSTRIP	MONTANA	10/85	2	A
MONTANA-DAKOTA UTILITIES						
COYOTE	1	BEULAH	NORTH DAKOTA	4/81	1	D
MUSCATINE POWER & WATER						
MUSCATINE	9	MUSCATINE	IOWA	4/83	1	B
NEBRASKA PUBLIC POWER DISTRICT						
FOSSIL III	1	SARGENT	NEBRASKA	3/96	6	B
NEVADA POWER						
HARRY ALLEN	1	LAS VEGAS	NEVADA	0/94	6	B
HARRY ALLEN	2	LAS VEGAS	NEVADA	0/95	6	B
HARRY ALLEN	3	LAS VEGAS	NEVADA	0/96	6	B
HARRY ALLEN	4	LAS VEGAS	NEVADA	0/97	6	B
REID GARDNER	1	MOAPA	NEVADA	3/74	1	D
REID GARDNER	2	MOAPA	NEVADA	4/74	1	D
REID GARDNER	3	MOAPA	NEVADA	6/76	1	D
REID GARDNER	4	MOAPA	NEVADA	6/83	1	B
NEW YORK STATE ELEC & GAS						
SOMERSET	1	SOMERSET	NEW YORK	7/84	1	A

1. OPERATIONAL UNITS
2. UNITS UNDER CONSTRUCTION
3. PLANNED - CONTRACT AWARDED
4. PLANNED - LETTER OF INTENT SIGNED
5. PLANNED - REQUESTING/EVALUATING BIDS
6. PLANNED - CONSIDERING ONLY FGD SYSTEMS FOR SO2 CONTROL
7. PLANNED - CONSIDERING FGD SYSTEMS; ALSO ALTERNATIVE METHODS

A. STANDARD(S) MORE STRINGENT THAN NSPS (6/79)
B. FEDERAL NSPS (6/79)
C. STANDARD(S) MORE STRINGENT THAN NSPS (12/71) BUT NOT MORE STRINGENT THAN NSPS (6/79)
D. FEDERAL NSPS (12/71)
E. STANDARD(S) EQUAL TO OR LESS STRINGENT THAN NSPS (12/71)

SECTION 1
SUMMARY LIST OF FGD SYSTEMS

COMPANY NAME/ UNIT NAME	UNIT NO.	UNIT LOCATION		START-UP DATE	STATUS	REG CLASS
NIAGARA MOHAWK POWER						
CHARLES R. HUNTLEY	66	BUFFALO	NEW YORK	4/82	1	E
NORTHERN INDIANA PUB SERVICE						
SCHAHFER	17	WHEATFIELD	INDIANA	4/83	1	B
SCHAHFER	18	WHEATFIELD	INDIANA	6/86	2	B
NORTHERN STATES POWER						
RIVERSIDE	6-7	MINNEAPOLIS	MINNESOTA	11/80	1	E
SHERBURNE	1	BECKER	MINNESOTA	3/76	1	C
SHERBURNE	2	BECKER	MINNESOTA	3/77	1	C
SHERBURNE	3	BECKER	MINNESOTA	0/88	2	A
ORLANDO UTILITIES COMMISSION						
C.H. STANTON	1	ORLANDO	FLORIDA	0/87	2	A
PACIFIC POWER & LIGHT						
JIM BRIDGER	1	ROCK SPRINGS	WYOMING	0/90	3	C
JIM BRIDGER	2	ROCK SPRINGS	WYOMING	0/86	2	C
JIM BRIDGER	3	ROCK SPRINGS	WYOMING	0/88	3	C
JIM BRIDGER	4	ROCK SPRINGS	WYOMING	9/79	1	C
WYODAK	1	JOLIET	WYOMING	0/86	3	A
PENNSYLVANIA POWER						
BRUCE MANSFIELD	1	SHIPPINGPORT	PENNSYLVANIA	12/75	1	C
BRUCE MANSFIELD	2	SHIPPINGPORT	PENNSYLVANIA	7/77	1	C
BRUCE MANSFIELD	3	SHIPPINGPORT	PENNSYLVANIA	6/80	1	C
PHILADELPHIA ELECTRIC						
CROMBY	1	PHOENIXVILLE	PENNSYLVANIA	10/82	1	C
EDDYSTONE	1	EDDYSTONE	PENNSYLVANIA	9/82	1	C
EDDYSTONE	2	EDDYSTONE	PENNSYLVANIA	11/82	1	C
PLAINS ELECTRIC G & T						
PLAINS ESCALANTE	1	PREWITT	NEW MEXICO	10/84	2	D
PLATTE RIVER POWER AUTHORITY						
RAWHIDE	1	WELLINGTON	COLORADO	12/83	1	A
PUBLIC SERVICE INDIANA						
GIBSON	5	PRINCETON	INDIANA	10/82	1	D
PUBLIC SERVICE OF NEW MEXICO						
NEW MEXICO	1	BISTI	NEW MEXICO	0/95	6	A
SAN JUAN	1	WATERFLOW	NEW MEXICO	4/78	1	A
SAN JUAN	2	WATERFLOW	NEW MEXICO	8/78	1	A
SAN JUAN	3	WATERFLOW	NEW MEXICO	12/79	1	A
SAN JUAN	4	WATERFLOW	NEW MEXICO	5/82	1	A
PUB. SER. CO. OF COLORADO						
PAWNEE	2	RUSH	COLORADO	0/90	6	
SALT RIVER PROJECT						
CORONADO	1	ST. JOHNS	ARIZONA	11/79	1	C
CORONADO	2	ST. JOHNS	ARIZONA	7/80	1	C
CORONADO	3	ST. JOHNS	ARIZONA	0/92	6	B

1. OPERATIONAL UNITS
2. UNITS UNDER CONSTRUCTION
3. PLANNED - CONTRACT AWARDED
4. PLANNED - LETTER OF INTENT SIGNED
5. PLANNED - REQUESTING/EVALUATING BIDS
6. PLANNED - CONSIDERING ONLY FGD SYSTEMS FOR SO2 CONTROL
7. PLANNED - CONSIDERING FGD SYSTEMS; ALSO ALTERNATIVE METHODS

A. STANDARD(S) MORE STRINGENT THAN NSPS (6/79)
B. FEDERAL NSPS (6/79)
C. STANDARD(S) MORE STRINGENT THAN NSPS (12/71) BUT NOT MORE STRINGENT THAN NSPS (6/79)
D. FEDERAL NSPS (12/71)
E. STANDARD(S) EQUAL TO OR LESS STRINGENT THAN NSPS (12/71)

SECTION 1
SUMMARY LIST OF FGD SYSTEMS

COMPANY NAME/ UNIT NAME	UNIT NO.	UNIT LOCATION		START-UP DATE	STATUS	REG CLASS
SAN ANTONIO PUBLIC SERVICE						
N/D	1	UNDECIDED	TEXAS	0/93	6	B
N/D	2	UNDECIDED	TEXAS	0/95	6	B
N/D	3	UNDECIDED	TEXAS	0/99	6	B
N/D	4	UNDECIDED	TEXAS	99/99	6	B
SAN MIGUEL ELECTRIC						
SAN MIGUEL	1	SAN MIGUEL	TEXAS	8/81	1	D
SEMINOLE ELECTRIC						
SEMINOLE	1	PALATKA	FLORIDA	5/83	1	A
SEMINOLE	2	PALATKA	FLORIDA	9/84	1	A
TAYLOR	1	PERRY	FLORIDA	99/99	6	B
TAYLOR	2	PERRY	FLORIDA	99/99	6	B
SIERRA PACIFIC POWER						
THOUSAND SPRINGS	1	WELLS	NEVADA	0/90	6	B
THOUSAND SPRINGS	2	WELLS	NEVADA	0/95	6	B
THOUSAND SPRINGS	3	WELLS	NEVADA	0/99	6	B
VALMY	2	VALMY	NEVADA	6/85	2	B
SIKESTON BRD OF MUNICIPAL UTIL						
SIKESTON	1	SIKESTON	MISSOURI	6/81	1	D
SOUTH CAROLINA PUBLIC SERVICE						
CROSS	1	CROSS	SOUTH CAROLINA	5/91	3	A
CROSS	2	CROSS	SOUTH CAROLINA	10/83	1	A
WINYAH	2	GEORGETOWN	SOUTH CAROLINA	7/77	1	C
WINYAH	3	GEORGETOWN	SOUTH CAROLINA	7/80	1	C
WINYAH	4	GEORGETOWN	SOUTH CAROLINA	7/81	1	A
SOUTH MISSISSIPPI ELEC PWR						
R.D. MORROW, SR.	1	PURVIS	MISSISSIPPI	8/78	1	D
R.D. MORROW, SR.	2	PURVIS	MISSISSIPPI	6/79	1	D
SOUTHERN ILLINOIS POWER						
MARION	4	MARION	ILLINOIS	4/79	1	D
SOUTHERN INDIANA GAS & ELEC						
A.B. BROWN	1	WEST FRANKLIN	INDIANA	3/79	1	D
A.B. BROWN	2	WEST FRANKLIN	INDIANA	1/85	2	B
SOUTHWESTERN ELECTRIC POWER						
DOLET HILLS	1	MANSFIELD	LOUISIANA	12/85	2	B
HENRY W. PIRKEY	1	HALLSVILLE	TEXAS	12/84	2	D
WALKER CO.	1	HUNTSVILLE	TEXAS	12/93	6	B
WALKER CO.	2	HUNTSVILLE	TEXAS	12/93	6	B
SOUTHWESTERN PUBLIC SERVICE						
SOUTH PLAINS	1	IDALOO	TEXAS	0/90	6	B
SPRINGFIELD CITY UTILITIES						
SOUTHWEST	1	SPRINGFIELD	MISSOURI	4/77	1	D

1. OPERATIONAL UNITS
2. UNITS UNDER CONSTRUCTION
3. PLANNED - CONTRACT AWARDED
4. PLANNED - LETTER OF INTENT SIGNED
5. PLANNED - REQUESTING/EVALUATING BIDS
6. PLANNED - CONSIDERING ONLY FGD SYSTEMS FOR SO2 CONTROL
7. PLANNED - CONSIDERING FGD SYSTEMS; ALSO ALTERNATIVE METHODS

A. STANDARD(S) MORE STRINGENT THAN NSPS (6/79)
B. FEDERAL NSPS (6/79)
C. STANDARD(S) MORE STRINGENT THAN NSPS (12/71) BUT NOT MORE STRINGENT THAN NSPS (6/79)
D. FEDERAL NSPS (12/71)
E. STANDARD(S) EQUAL TO OR LESS STRINGENT THAN NSPS (12/71)

SECTION 1
SUMMARY LIST OF FGD SYSTEMS

COMPANY NAME/ UNIT NAME	UNIT NO.	UNIT LOCATION		START-UP DATE	STATUS	REG CLASS
SPRINGFIELD WATER, LIGHT & PWR						
DALLMAN	3	SPRINGFIELD	ILLINOIS	10/80	1	D
SUNFLOWER ELECTRIC						
HOLCOMB	1	HOLCOMB	KANSAS	7/83	1	B
TAMPA ELECTRIC						
BIG BEND	4	TAMPA	FLORIDA	1/85	2	A
TENNESSEE VALLEY AUTHORITY						
PARADISE	1	PARADISE	KENTUCKY	5/83	1	C
PARADISE	2	PARADISE	KENTUCKY	7/83	1	C
WIDOWS CREEK	7	BRIDGEPORT	ALABAMA	3/81	1	C
WIDOWS CREEK	8	STEVENSON	ALABAMA	5/77	1	C
TEXAS MUNICIPAL POWER AGENCY						
GIBBONS CREEK	1	CARLOS	TEXAS	11/82	1	D
TEXAS POWER & LIGHT						
SANDOW	4	ROCKDALE	TEXAS	12/80	1	D
TWIN OAKS	1	BREMOND	TEXAS	8/89	3	B
TWIN OAKS	2	BREMOND	TEXAS	8/91	3	B
TEXAS UTILITIES						
FOREST GROVE	1	ATHENS	TEXAS	0/88	3	B
MARTIN LAKE	1	TATUM	TEXAS	4/77	1	D
MARTIN LAKE	2	TATUM	TEXAS	5/78	1	D
MARTIN LAKE	3	TATUM	TEXAS	2/79	1	D
MARTIN LAKE	4	TATUM	TEXAS	0/89	3	B
MONTICELLO	3	MT. PLEASANT	TEXAS	5/78	1	D
TUCSON ELECTRIC POWER						
SPRINGERVILLE	1	SPRINGERVILLE	ARIZONA	2/85	2	D
SPRINGERVILLE	2	SPRINGERVILLE	ARIZONA	2/89	3	D
SPRINGERVILLE	3	SPRINGERVILLE	ARIZONA	0/91	6	A
UNITED POWER ASSOCIATION						
STANTON	1A	STANTON	NORTH DAKOTA	7/82	1	D
UTAH POWER & LIGHT						
HUNTER	1	CASTLE DALE	UTAH	3/79	1	C
HUNTER	2	CASTLE DALE	UTAH	6/80	1	C
HUNTER	3	CASTLE DALE	UTAH	4/83	1	B
HUNTINGTON	1	HUNTINGTON	UTAH	5/78	1	C
NAUGHTON	3	KEMMERER	WYOMING	9/81	1	A
WASHINGTON WATER POWER						
CRESTON COAL	1	CRESTON	WASHINGTON	0/95	6	A
CRESTON COAL	2	CRESTON	WASHINGTON	0/97	6	A
CRESTON COAL	3	CRESTON	WASHINGTON	0/98	6	A
CRESTON COAL	4	CRESTON	WASHINGTON	0/99	6	A
WEST PENN POWER						
MITCHELL	33	COURTNEY	PENNSYLVANIA	8/82	1	A

1. OPERATIONAL UNITS
2. UNITS UNDER CONSTRUCTION
3. PLANNED - CONTRACT AWARDED
4. PLANNED - LETTER OF INTENT SIGNED
5. PLANNED - REQUESTING/EVALUATING BIDS
6. PLANNED - CONSIDERING ONLY FGD SYSTEMS FOR SO2 CONTROL
7. PLANNED - CONSIDERING FGD SYSTEMS; ALSO ALTERNATIVE METHODS

A. STANDARD(S) MORE STRINGENT THAN NSPS (6/79)
B. FEDERAL NSPS (6/79)
C. STANDARD(S) MORE STRINGENT THAN NSPS (12/71) BUT NOT MORE STRINGENT THAN NSPS (6/79)
D. FEDERAL NSPS (12/71)
E. STANDARD(S) EQUAL TO OR LESS STRINGENT THAN NSPS (12/71)

SECTION 1
SUMMARY LIST OF FGD SYSTEMS

COMPANY NAME/ UNIT NAME	UNIT NO.	UNIT LOCATION		START-UP DATE	STATUS	REG CLASS
WEST TEXAS UTILITIES						
OKLAUNION	1	OKLAUNION	TEXAS	9/86	2	B
OKLAUNION	2	OKLAUNION	TEXAS	0/96	6	B
WHITE PINE COUNTY						
WHITE PINE PWR PROJ.	1	ELY	NEVADA	3/91	6	B
WHITE PINE PWR PROJ.	2	ELY	NEVADA	3/92	6	B

1. OPERATIONAL UNITS
2. UNITS UNDER CONSTRUCTION
3. PLANNED - CONTRACT AWARDED
4. PLANNED - LETTER OF INTENT SIGNED
5. PLANNED - REQUESTING/EVALUATING BIDS
6. PLANNED - CONSIDERING ONLY FGD SYSTEMS FOR SO2 CONTROL
7. PLANNED - CONSIDERING FGD SYSTEMS; ALSO ALTERNATIVE METHODS

A. STANDARD(S) MORE STRINGENT THAN NSPS (6/79)
B. FEDERAL NSPS (6/79)
C. STANDARD(S) MORE STRINGENT THAN NSPS (12/71) BUT NOT MORE STRINGENT THAN NSPS (6/79)
D. FEDERAL NSPS (12/71)
E. STANDARD(S) EQUAL TO OR LESS STRINGENT THAN NSPS (12/71)

SECTION 2
STATUS OF FGD SYSTEMS

UNIT IDENTIFICATION	ABSTRACT
ALABAMA ELECTRIC TOMBIGBEE 2 NEW 255 MW (GROSS) 179 MW (ESC) COAL 1.61 %S BITUMINOUS LIMESTONE PEABODY PROCESS SYSTEMS ENERGY CONSUMPTION: 3.1% STATUS 1 STARTUP 9/78	TOMBIGBEE 2 OF ALABAMA ELECTRIC COOP IS A PULVERIZED COAL BOILER LOCATED IN LEROY, ALABAMA. THE BOILER GENERATES A MAXIMUM FLUE GAS FLOW OF 953,000 ACFM AND BURNS BITUMINOUS COAL WITH AN AVERAGE SULFUR CONTENT OF 1.61% AND AN AVERAGE HEAT CONTENT OF 11,424 BTU/LB. THE UNIT SO2 EMMISSION LIMITATION VALUE IS 1.2 LB/MMBTU. PRIMARY PARTICULATE MATTER CONTROL IS PROVIDED BY A HOT SIDE ESP. THE SO2 REMOVAL EQUIPMENT CONSISTS OF TWO SPRAY TOWERS SUPPLIED BY PEABODY PROCESS SYSTEMS WHICH UTILIZE A LIMESTONE REAGENT. A CHEVRON MIST ELIMINATOR IS INCLUDED FOR EACH TOWER AND THE FLUE GAS IS REHEATED WITH BYPASSED GAS BEFORE BEING VENTED TO A 400 FOOT ACID-BRICK LINED STACK. THE SYSTEM OPERATES IN A CLOSED WATER LOOP MODE AND SPENT ABSORBENT IS DISPOSED OF IN AN ON-SITE LINED POND.
ALABAMA ELECTRIC TOMBIGBEE 3 NEW 255 MW (GROSS) 179 MW (ESC) COAL 1.61 %S BITUMINOUS LIMESTONE PEABODY PROCESS SYSTEMS ENERGY CONSUMPTION: 3.1% STATUS 1 STARTUP 6/79	TOMBIGBEE 3 OF ALABAMA ELECTRIC COOP IS A PULVERIZED COAL BOILER LOCATED IN LEROY, ALABAMA. THE BOILER GENERATES A MAXIMUM FLUE GAS FLOW OF 953,000 ACFM AND BURNS BITUMINOUS COAL WITH AN AVERAGE SULFUR CONTENT OF 1.61 AND AN AVERAGE HEAT CONTENT OF 11,424 BTU/LB. THE UNIT SO2 EMISSION LIMITATION VALUE IS 1.2 LB/MMBTU. PRIMARY PARTICULATE CONTROL IS PROVIDED BY A HOT SIDE ESP. THE SO2 REMOVAL EQUIPMENT CONSISTS OF TWO SPRAY TOWERS SUPPLIED BY PEABODY PROCESS SYSTEMS WHICH UTILIZE A LIMESTONE REAGENT. A CHEVRON MIST ELIMINATOR IS INCLUDED IN EACH TOWER, AND THE FLUE GAS IS REHEATED WITH BYPASSED GAS BEFORE BEING VENTED TO A 400 FOOT ACID BRICK LINED STACK. THE SYSTEM OPERATES IN A CLOSED WATER LOOP MODE, AND SPENT ABSORBENT IS DISPOSED IN AN ON-SITE LINED POND.
ARIZONA ELECTRIC POWER APACHE 2 NEW 195 MW (GROSS) 98 MW (ESC) COAL .70 %S SUBBITUMINOUS LIMESTONE RESEARCH-COTTRELL ENERGY CONSUMPTION: 4.1% STATUS 1 STARTUP 8/78	APACHE 2 OF ARIZONA ELECTRIC POWER COOP IS LOCATED IN COCHISE, ARIZONA AND IS A DRY BOTTOM PULVERIZED COAL FIRED UNIT WITH A FLUE GAS FLOW OF 735,000 ACFM. SUBBITUMINOUS COAL WITH A HEATING VALUE OF 10,000 BTU/LB, A SULFUR CONTENT OF 0.70% AND AN ASH CONTENT OF 15% IS THE FUEL USED FOR THIS UNIT. PARTICULATE MATTER IS CONTROLLED BY A HOT SIDE ESP. HALF THE FLUE GAS PASSES THROUGH TWO RESEARCH-COTTRELL PACKED TOWERS EMPLOYING LIMESTONE ABSORBENT AND HAVING A DESIGN SO2 REMOVAL OF 85%. ENTRAINED DROPLETS ARE REMOVED BY CHEVRON TYPE MIST ELIMINATORS. NO REHEAT IS EMPLOYED. A 400 FT COLE BRAND CXL2000 LINED STACK IS IN USE. THE SYSTEM OPERATES IN AN OPEN WATER LOOP MODE AND WASTE MATERIAL IS DISPOSED OF IN OFF-SITE SLUDGE PONDS. OPERATIONS COMMENCED IN AUGUST 1978.
ARIZONA ELECTRIC POWER APACHE 3 NEW 195 MW (GROSS) 98 MW (ESC) COAL .70 %S SUBBITUMINOUS LIMESTONE RESEARCH-COTTRELL ENERGY CONSUMPTION: 4.1% STATUS 1 STARTUP 6/79	APACHE 3 OF ARIZONA ELECTRIC POWER COOP IS A DRY BOTTOM, PULVERIZED COAL FIRED UNIT IN COCHISE, ARIZONA. LOW (0.70%) SULFUR SUBBITUMINOUS COAL WITH AN AVERAGE HEATING VALUE OF 10,000 BTU/LB PRODUCES A MAXIMUM FLUE GAS FLOW OF 735,000 ACFM. HALF OF THE FLUE GAS PASSES THROUGH A HOT SIDE ESP TO TWO RESEARCH COTTRELL PACKED TOWERS, WHERE LIMESTONE IS USED TO REMOVE 85% OF THE SO2. THE GAS EXITS A HORIZONTAL CHEVRON MIST ELIMINATOR INTO ITS OWN CEILCOTE LINED FLUE IN THE 400 FOOT STACK IT SHARES WITH UNIT 2. THE FGD SYSTEM WHICH HAS BEEN OPERATIONAL SINCE JUNE OF 1979, USES NO REHEAT. THE SYSTEM OPERATES IN AN OPEN WATER LOOP AND SLUDGE IS DISPOSED OF IN TWO OFF SITE LINED PONDS WITH 20 YEARS EXPECTED LIFESPAN. TWO ADDITIONAL PONDS ARE PLANNED, WHICH WOULD ADD ANOTHER 20 YEARS OF DISPOSAL CAPACITY.
ARIZONA PUBLIC SERVICE CHOLLA 1 RETROFIT 119 MW (GROSS) 119 MW (ESC) COAL .50 %S BITUMINOUS LIMESTONE RESEARCH-COTTRELL ENERGY CONSUMPTION: 3.4% STATUS 1 STARTUP 10/73	ARIZONA PUBLIC SERVICE'S CHOLLA 1 IS LOCATED IN JOSEPH CITY, ARIZONA AND IS A TANGENTIALLY FIRED, WET BOTTOM PULVERIZED COAL UNIT. IT IS FUELED BY BITUMINOUS COAL THAT HAS A SULFUR CONTENT OF 0.5% AND A HEATING VALUE OF 10,150 BTU/LB. PARTICULATE MATTER IS CONTROLLED BY TWO FLOODED DISC SCRUBBERS. THE FGD SYSTEM STARTED UP IN OCTOBER, 1973 AND IS NOW OPERATIONAL. SO2 IS CONTROLLED BY ONE TOWER WITH MUNTERS PACKING EMPLOYING A LIMESTONE ABSORBENT. THE UNIT, SUPPLIED BY RESEARCH COTTRELL, HAS A DESIGN SO2 RE-REMOVAL EFFICIENCY OF 92%. CHEVRON MIST ELIMINATORS ARE LOCATED PRIOR TO AN IN-LINE STEAM REHEAT SYSTEM. THE TREATED FLUE GAS IS VENTED TO A 250 FT ACID BRICK LINED STACK. THE SYSTEM OPERATES IN AN OPEN WATER LOOP MODE AND THE UNTREATED WASTE IS DISPOSED OF IN AN ON-SITE UNLINED POND.
ARIZONA PUBLIC SERVICE CHOLLA 2 NEW 285 MW (GROSS) 285 MW (ESC) COAL .50 %S BITUMINOUS LIMESTONE RESEARCH-COTTRELL ENERGY CONSUMPTION: 5.3% STATUS 1 STARTUP 4/78	CHOLLA 2 OF ARIZONA PUBLIC SERVICE IS LOCATED IN JOSEPH CITY, ARIZONA. THE BOILER BURNS PULVERIZED BITUMINOUS COAL (0.5% S, 10,150 BTU/LB). MECHANICAL COLLECTORS PROVIDE INITIAL PARTICULATE CONTROL. FOUR PARALLEL FLOODED DISC AND PACKED TOWER SO2 ABSORBER TRAINS (THREE ARE REQUIRED FOR FULL LOAD) PROVIDE PRIMARY PARTICULATE AND SO2 CONTROL. THE DESIGN SO2 REMOVAL FOR THE SYSTEM, WHICH BEGAN OPERATIONS IN APRIL, 1978, IS 75%. THE CLEANED GAS PASSES THROUGH AN IN-LINE STEAM REHEATER INTO A 550 FOOT ACID BRICK LINED STACK. SLUDGE FROM THE OPEN WATER LOOP SYSTEM IS DEPOSITED IN A FLY ASH POND.

SECTION 2
STATUS OF FGD SYSTEMS

UNIT IDENTIFICATION	ABSTRACT
ARIZONA PUBLIC SERVICE CHOLLA 4 NEW 375 MW (GROSS) 126 MW (ESC) COAL .50 %S LIMESTONE RESEARCH-COTTRELL ENERGY CONSUMPTION: ****% STATUS 1 STARTUP 3/81	CHOLLA 4 OF ARIZONA PUBLIC SERVICE IS LOCATED IN JOSEPH CITY, ARIZONA. THE PULVERIZED COAL (0.5% S, 10150 BTU/LB) FIRED BOILER EXHAUSTS FLUE GAS THROUGH AN ESP TO A DOUBLE LOOP COMBINATION TOWER (RESEARCH-COTTRELL DESIGN) WHICH TREATS 36% OF THE GAS WITH LIMESTONE. OPERATIONS COMMENCED IN MARCH, 1981.
ARIZONA PUBLIC SERVICE CHOLLA 5 NEW 375 MW (GROSS) 126 MW (ESC) COAL .50 %S PROCESS NOT SELECTED VENDOR NOT SELECTED ENERGY CONSUMPTION: ****% STATUS 6 STARTUP 0/97	ARIZONA PUBLIC SERVICE HAS PLANS FOR A NEW UNIT, CHOLLA 5, TO BE LOCATED IN JOSEPH CITY, ARIZONA. THE 375 MW (GROSS) PULVERIZED COAL (10150 BTU/LB 13.5% S) FIRED BOILER SUPPLIED BY COMBUSTION ENGINEERING WILL EMPLOY AN FGD SYSTEM FOR CONTROL OF SO2 EMISSIONS. START-UP IS SCHEDULED FOR 1997.
ARIZONA PUBLIC SERVICE FOUR CORNERS 1 RETROFIT 195 MW (GROSS) 195 MW (ESC) COAL .75 %S SUBBITUMINOUS LIME/ALKALINE FLYASH GE ENVIRONMENTAL SERVICES ENERGY CONSUMPTION: 2.6% STATUS 1 STARTUP 11/79	ARIZONA PUBLIC SERVICE HAS UPGRADED THE OPERATIONAL PARTICULATE SCRUBBERS AT FOUR CORNERS 1, 2, AND 3 IN FRUITLAND, NEW MEXICO TO HANDLE ADDITIONAL SO2 REMOVAL. THE FRONT FIRED, DRY BOTTOM, PULVERIZED COAL (SUB-BITUMINOUS, 0.75% S, 8600 BTU/LB) UNITS 1 AND 2 SUPPLY 814,000 ACFM EACH INTO 2 GEESI VENTURI SCRUBBERS PER UNIT FOR PRIMARY PARTICLE CONTROL AND APPROXIMATELY 30% SO2 REMOVAL USING ALKALINE FLY ASH. THE DESIGN SO2 REMOVAL EFFICIENCY SINCE THE CONVERSION TO LIME AND ALKALINE FLY ASH SCRUBBING IS 67.5%. THE SYSTEM OPERATES IN AN OPEN WATER LOOP MODE AND FLUE GAS EXITS A 250 FOOT STACK. OPERATIONS COMMENCED IN NOVEMBER 1979.
ARIZONA PUBLIC SERVICE FOUR CORNERS 2 RETROFIT 195 MW (GROSS) 195 MW (ESC) COAL .75 %S SUBBITUMINOUS LIME/ALKALINE FLYASH GE ENVIRONMENTAL SERVICES ENERGY CONSUMPTION: 2.6% STATUS 1 STARTUP 11/79	ARIZONA PUBLIC SERVICE HAS UPGRADED THE OPERATIONAL PARTICULATE SCRUBBERS AT FOUR CORNERS 1,2, AND 3 IN FRUITLAND, NEW MEXICO TO HANDLE ADDITIONAL SO2 REMOVAL. THE FRONT FIRED, DRY BOTTOM, PULVERIZED COAL (SUB-BITUMINOUS, 0.75% S, 8600 BTU/LB) UNITS 1 AND 2 SUPPLY 814,000 ACFM EACH INTO 2 GEESI VENTURI SCRUBBERS PER UNIT FOR PRIMARY PARTICLE CONTROL AND APPROXIMATELY 30% SO2 REMOVAL USING ALKALINE FLY ASH. THE DESIGN SO2 REMOVAL EFFICIENCY SINCE THE CONVERSION TO LIME AND ALKALINE FLY ASH SCRUBBING IS 67.5%. THE SYSTEM OPERATES IN AN OPEN WATER LOOP MODE AND FLUE GAS EXITS A 250 FOOT STACK. OPERATIONS COMMENCED IN NOVEMBER 1979.
ARIZONA PUBLIC SERVICE FOUR CORNERS 3 RETROFIT 225 MW (GROSS) 225 MW (ESC) COAL .75 %S SUBBITUMINOUS LIME/ALKALINE FLYASH GE ENVIRONMENTAL SERVICES ENERGY CONSUMPTION: ****% STATUS 1 STARTUP 11/79	ARIZONA PUBLIC SERVICE HAS UPGRADED THE OPERATIONAL PARTICULATE SCRUBBERS AT FOUR CORNERS 1,2, AND 3 IN FRUITLAND, NEW MEXICO TO HANDLE ADDITIONAL SO2 REMOVAL. THE FRONT FIRED, DRY BOTTOM, PULVERIZED COAL (SUBBITUMINOUS, 0.75% S, 8600 BTU/LB) UNIT 3 SUPPLIES 1,030,000 ACFM INTO 2 GEESI VENTURI SCRUBBERS PER UNIT FOR PRIMARY PARTICLE CONTROL AND APPROXIMATELY 30% SO2 REMOVAL USING ALKALINE FLY ASH. THE DESIGN SO2 REMOVAL EFFICIENCY SINCE THE CONVERSION TO LIME AND ALKALINE FLY ASH SCRUBBING IS 67.5%. THE SYSTEM OPERATES IN AN OPEN WATER LOOP MODE AND FLUE GAS EXITS A 250 FOOT STACK. OPERATIONS COMMENCED IN NOVEMBER 1979.
ARIZONA PUBLIC SERVICE FOUR CORNERS 4 RETROFIT 745 MW (GROSS) 745 MW (ESC) COAL .75 %S SUBBITUMINOUS LIME BABCOCK & WILCOX ENERGY CONSUMPTION: ****% STATUS 2 STARTUP 10/84	ARIZONA PUBLIC SERVICE'S FOUR CORNERS 4 AND 5 RETROFIT FGD SYSTEMS ARE UNDER CONSTRUCTION IN FARMINGTON, NEW MEXICO. THE 745 MW (GROSS) UNITS WILL BURN SUBBITUMINOUS COAL (0.75% S, 8650 BTU/LB) AND WILL EACH EMPLOY A BABCOCK & WILCOX WET LIME FGD SYSTEM FOR SO2 CONTROL. FABRIC FILTERS WILL BE USED FOR CONTROL OF PARTICULATE MATTER. THE UNIT WILL SUPPLY 560,000 ACFM TO EACH OF 10 ABSORBER MODULES WITH AN OVERALL DESIGN SO2 REMOVAL EFFICIENCY OF 90%. INITIAL START-UP IS SCHEDULED FOR OCTOBER 1984.

SECTION 2
STATUS OF FGD SYSTEMS

UNIT IDENTIFICATION	ABSTRACT
ARIZONA PUBLIC SERVICE FOUR CORNERS 5 RETROFIT 745 MW (GROSS) 745 MW (ESC) COAL .75 %S SUBBITUMINOUS LIME BABCOCK & WILCOX ENERGY CONSUMPTION: ****% STATUS 2 STARTUP 10/84	ARIZONA PUBLIC SERVICE'S FOUR CORNERS 4 AND 5 RETROFIT FGD SYSTEMS ARE UNDER CONSTRUCTION IN FARMINGTON, NEW MEXICO. THE 745 MW (GROSS) UNITS WILL BURN SUBBITUMINOUS COAL (0.75% S, 8650 BTU/LB) AND WILL EACH EMPLOY A BABCOCK & WILCOX WET LIME FGD SYSTEM FOR SO2 CONTROL. FABRIC FILTERS WILL BE USED FOR CONTROL OF PARTICULATE MATTER. THE UNIT WILL SUPPLY 560,000 ACFM TO EACH OF 10 ABSORBER MODULES WITH AN OVERALL DESIGN SO2 REMOVAL EFFICIENCY OF 90%. INITIAL START-UP IS SCHEDULED FOR OCTOBER 1984.
ASSOCIATED ELECTRIC THOMAS HILL 3 NEW 730 MW (GROSS) 670 MW (ESC) COAL 4.80 %S LIMESTONE M.W. KELLOGG ENERGY CONSUMPTION: ****% STATUS 1 STARTUP 10/82	THOMAS HILL 3 OF ASSOCIATED ELECTRIC COOP IS A PULVERIZED COAL (4.8% S, 10,500 BTU/LB) FIRED UNIT LOCATED IN MOBERLY, MISSOURI. TWO COLD SIDE ESP'S PRECEDE THE FOUR 91.5% EFFICIENT M. W. KELLOGG HORIZONTAL WEIR FGD MODULES USING MAG-PROMOTED LIMESTONE AS THE ABSORBENT. THE CLEANED GAS PASSES THROUGH A VERTICAL CHEVRON MIST ELIMINATOR TO A 650 FOOT BRICK LINED STACK. REHEAT IS ACCOMPLISHED BY FLUE GAS BYPASS. THE FIXATED SLUDGE IS TRUCKED TO AN ACTIVE STRIP MINE. THE SYSTEM OPERATES IN A CLOSED WATER LOOP. THE FGD SYSTEM HAS BEEN OPERATIONAL SINCE OCTOBER 1982.
ATLANTIC CITY ELECTRIC CUMBERLAND 1 NEW 330 MW (GROSS) 330 MW (ESC) COAL 3.25 %S BITUMINOUS LIMESTONE VENDOR NOT SELECTED ENERGY CONSUMPTION: ****% STATUS 6 STARTUP 99/99	CUMBERLAND 1 IS A PULVERIZED COAL (3.25% S) FIRED BOILER TO BE LOCATED IN MILVILLE, NEW JERSEY. THE UTILITY IS CONSIDERING A LIMESTONE FGD SYSTEM WITH NO BYPRODUCT RECOVERY FOR SO2 CONTROL. START-UP FOR THE UNIT HAS BEEN DEFERRED INDEFINITELY.
BASIN ELECTRIC POWER ANTELOPE VALLEY 1 NEW 440 MW (GROSS) 440 MW (ESC) COAL .68 %S LIGNITE LIME/SPRAY DRYING JOY MFG/NIRO ATOMIZER ENERGY CONSUMPTION: ****% STATUS 1 STARTUP 5/83	ANTELOPE VALLEY 1 OF BASIN ELECTRIC POWER IS A PULVERIZED COAL (0.68% S, 6600 BTU/LB LIGNITE) FIRED UNIT LOCATED IN BEULAH, NORTH DAKOTA. THE BOILER FEEDS 2,055,000 ACFM OF FLUE GAS TO A LIME/SPRAY DRYING SYSTEM SUPPLIED BY JOY MFG/NIRO ATOMIZER. THE 62% EFFICIENT SYSTEM CONSISTS OF FIVE NIRO ATOMIZER SPRAY DRYERS FOLLOWED BY TWO JOY MFG BAGHOUSES. THE CLEANED GAS, ALONG WITH A 4% BYPASS REHEAT, EXIT A 600 FOOT PVC LINED STACK. THE SYSTEM OPERATES IN AN OPEN WATER LOOP AND THE SLUDGE IS USED FOR LANDFILL IN A COAL MINE. INITIAL OPERATIONS COMMENCED IN MAY, 1983.
BASIN ELECTRIC POWER ANTELOPE VALLEY 2 NEW 440 MW (GROSS) 440 MW (ESC) COAL .68 %S LIGNITE LIME/SPRAY DRYING JOY MFG/NIRO ATOMIZER ENERGY CONSUMPTION: ****% STATUS 2 STARTUP 11/85	ANTELOPE VALLEY 2 OF BASIN ELECTRIC POWER COOP IS UNDER CONSTRUCTION IN BEULAH, NORTH DAKOTA. JOY/NIRO WAS AWARDED A CONTRACT FOR THIS LIGNITE (0.68% S, 6600 BTU/LB) FIRED UNIT. A LIME/SPRAY DRYING FGD SYSTEM AND FABRIC FILTERS WILL BE EMPLOYED FOR SO2 AND PARTICULATE CONTROL. THE SYSTEM WILL OPERATE IN AN OPEN WATER LOOP MODE AND BE REQUIRED TO COMPLY WITH STATE EMISSIONS STANDARDS VIA BEST AVAILABLE CONTROL TECHNOLOGY. START-UP IS SCHEDULED FOR NOVEMBER, 1985.
BASIN ELECTRIC POWER ANTELOPE VALLEY 3 NEW 560 MW (GROSS) 560 MW (ESC) LIGNITE .68 %S LIME/SPRAY DRYING VENDOR NOT SELECTED ENERGY CONSUMPTION: ****% STATUS 6 STARTUP 0/92	ANTELOPE VALLEY 3 OF BASIN ELECTRIC POWER IS A PLANNED 560 MW (GROSS) LIGNITE FIRED BOILER TO BE LOCATED IN BEULAH, NORTH DAKOTA. THE UTILITY IS PRESENTLY INVESTIGATING LIME/SPRAY DRYING AS THE POSSIBLE EMISSION CONTROL STRATEGY. START-UP IS EXPECTED IN 1992.

SECTION 2
STATUS OF FGD SYSTEMS

UNIT IDENTIFICATION	ABSTRACT
BASIN ELECTRIC POWER LARAMIE RIVER 1 NEW 570 MW (GROSS) 570 MW (ESC) COAL .54 %S SUBBITUMINOUS LIMESTONE RESEARCH-COTTRELL ENERGY CONSUMPTION: .9% STATUS 1 STARTUP 7/80	BASIN ELECTRIC POWER COOP'S LARAMIE RIVER 1 IS A PULVERIZED COAL (0.54% S, 8400 BTU/LB) FIRED UNIT LOCATED IN WHEATLAND, WYOMING. THE BOILER FEEDS 2,300,000 ACFM OF FLUE GAS THROUGH A COLD SIDE ESP TO FIVE RESEARCH COTTRELL LIMESTONE PACKED TOWER MODULES, WHICH REMOVE 90% OF THE SO2. THE CLEANED GAS EXITS FROM A VERTICAL CHEVRON MIST ELIMINATOR INTO A 600 FOOT ACID BRICK LINED STACK. NO REHEAT IS USED. THE FLYASH STABLIIZED SLUDGE IS DEWATERED TO 83% SOLIDS BEFORE BEING LANDFILLED, AND THE SYSTEM EMPLOYS A CLOSED WATER LOOP. OPERATIONS BEGAN ON JULY 1, 1980.
BASIN ELECTRIC POWER LARAMIE RIVER 2 NEW 570 MW (GROSS) 570 MW (ESC) COAL .54 %S SUBBITUMINOUS LIMESTONE RESEARCH-COTTRELL ENERGY CONSUMPTION: ****% STATUS 1 STARTUP 7/81	BASIN ELECTRIC POWER COOP'S LARAMIE RIVER 2 IS A NEW UNIT LOCATED IN WHEATLAND, WYOMING. THE PULVERIZED SUBBITUMINOUS COAL (0.54% S, 8400 BTU/LB) FIRED BOILER FEEDS 2,300,000 ACFM OF FLUE GAS THROUGH A COLD SIDE ESP TO FIVE RESEARCH-COTTRELL LIMESTONE PACKED TOWER MODULES, WHICH REMOVE 90% OF THE SO2. THE CLEANED GAS EXITS FROM A VERTICAL CHEVRON MIST ELIMINATOR INTO A 600 FOOT ACID BRICK LINED STACK. NO REHEAT IS USED. THE FLYASH FIXATED SLUDGE IS DEWATERED TO 83% SOLIDS BEFORE BEING LANDFILLED IN THIS CLOSED WATER LOOP SYSTEM. START-UP TOOK PLACE IN JULY 1981.
BASIN ELECTRIC POWER LARAMIE RIVER 3 NEW 570 MW (GROSS) 570 MW (ESC) COAL .54 %S SUBBITUMINOUS LIME/SPRAY DRYING BABCOCK & WILCOX ENERGY CONSUMPTION: ****% STATUS 1 STARTUP 11/82	LARAMIE RIVER 3 OF BASIN ELECTRIC POWER COOP IS A NEW UNIT LOCATED IN WHEATLAND, WYOMING. IT UTILIZES FOUR BABCOCK & WILCOX LIME SPRAY DRIERS AND A COLD SIDE ESP. THE BOILER FIRES PULVERIZED COAL (0.54% S, 8400 BTU/LB) AND SUPPLYS 2,800,000 ACFM OF FLUE GAS TO THE FGD SYSTEM, WHICH REMOVES 85% OF THE SO2 BEFORE THE GAS EXITS THROUGH A 600 FOOT FIBER-REINFORCED POLYESTER LINED STACK. A 3% BYPASS IS USED FOR REHEAT. THE SYSTEM OPERATES IN AN OPEN WATER LOOP, AND THE DRY POWDER WASTE IS LANDFILLED.
BIG RIVERS ELECTRIC D.B. WILSON 1 NEW 440 MW (GROSS) 440 MW (ESC) COAL 3.75 %S BITUMINOUS LIME M.W. KELLOGG ENERGY CONSUMPTION: ****% STATUS 1 STARTUP 9/84	BIG RIVERS ELECTRIC'S D.B. WILSON 1 IS A NEW UNIT LOCATED IN CENTERTOWN, KENTUCKY. THE PULVERIZED BITUMINOUS COAL (3.75% S) FIRED FOSTER WHEELER BOILER HAS A GROSS MW RATING OF 440. A COLD SIDE ESP IS EMPLOYED FOR PARTICULATE CONTROL AND SLUDGE IS TREATED VIA FORCED OXIDATION. THE M. W. KELLOG WET LIME FGD SYSTEM AT UNIT 1 BEGAN INITIAL OPERATIONS IN SEPTEMBER 1984.
BIG RIVERS ELECTRIC GREEN 1 NEW 242 MW (GROSS) 242 MW (ESC) COAL 3.91 %S BITUMINOUS LIME AMERICAN AIR FILTER ENERGY CONSUMPTION: ****% STATUS 1 STARTUP 12/79	UNIT 1 OF BIG RIVERS ELECTRIC'S GREEN STATION IS LOCATED IN SEBREE,KENTUCKY. THE DRY BOTTOM PULVERIZED COAL (3.91% S, 9800 BTU/LB) FIRED BOILER SUPPLIES 1,000,000 ACFM TO A COLD SIDE ESP FOLLOWED BY TWO AMERICAN AIR FILTER LIME SPRAY TOWERS WHICH REMOVE 90% OF THE SO2. THE CLEANED GAS PASSES THROUGH A CHEVRON MIST ELIMINATOR AND EXITS A 350 FT SAUERISEN 72 LINED STACK AFTER IT IS HEATED BY A STEAM COIL REHEATER. THE SLUDGE FROM THE CLOSED WATER LOOP SYSTEM IS POZ-O-TEC STABILIZED. OPERATIONS COMMENCED IN DECEMBER 1979.
BIG RIVERS ELECTRIC GREEN 2 NEW 242 MW (GROSS) 242 MW (ESC) COAL 3.91 %S BITUMINOUS LIME AMERICAN AIR FILTER ENERGY CONSUMPTION: ****% STATUS 1 STARTUP 11/80	UNIT 2 OF BIG RIVERS ELECTRIC'S GREEN STATION IS LOCATED IN SEBREE, KENTUCKY. THE DRY BOTTOM PULVERIZED COAL (3.91% S, 9800 BTU/LB) FIRED BOILER SUPPLIES 1,000,000 ACFM TO A COLD SIDE ESP FOLLOWED BY TWO AMERICAN AIR FILTER LIME SPRAY TOWERS WHICH REMOVE 90% OF THE SO2. THE CLEANED GAS PASSES THROUGH A CHEVRON MIST ELIMINATOR AND EXITS A 350 FT SAUERISEN 72 LINED STACK AFTER IT IS HEATED BY A STEAM COIL REHEATER. THE SLUDGE FROM THE CLOSED WATER LOOP SYSTEM IS POZ-O-TEC STABILIZED. OPERATIONS COMMENCED IN NOVEMBER 1980.

SECTION 2
STATUS OF FGD SYSTEMS

UNIT IDENTIFICATION	ABSTRACT
BOSTON EDISON NEW BOSTON 1 NEW 388 MW (GROSS) 388 MW (ESC) COAL 2.30 %S SUBBITUMINOUS LIMESTONE VENDOR NOT SELECTED ENERGY CONSUMPTION: ****% STATUS 5 STARTUP 10/87	NEW BOSTON 1 AND 2 OF BOSTON EDISON ARE TWO OIL TO COAL CONVERSION UNITS LOCATED IN BOSTON MASSACHUSETTS. THE 388 MW (GROSS) BABCOCK AND WILCOX UNITS WILL FIRE SUBBITUMINOUS COAL (12,600 BTU/LB, 2.3% S). BIDS ARE CURRENTLY BEING REQUESTED/EVALUATED FOR A WET LIMESTONE FGD SYSTEM WITH GYPSUM GENERATED AS A SALEABLE BYPRODUCT. ESP'S WILL PROVIDE PARTICULATE CONTROL AND FLUE GAS WILL EXIT A 359 FT ACID BRICK LINED STACK. FORCED OXIDATION WILL BE UTILIZED FOR SLUDGE TREATMENT. UNIT 1 IS SCHEDULED TO START UP IN OCTOBER, 1987 AND UNIT 2 IN JUNE, 1988.
BOSTON EDISON NEW BOSTON 2 NEW 388 MW (GROSS) 388 MW (ESC) COAL 2.30 %S SUBBITUMINOUS LIMESTONE VENDOR NOT SELECTED ENERGY CONSUMPTION: ****% STATUS 5 STARTUP 6/88	NEW BOSTON 1 AND 2 OF BOSTON EDISON ARE TWO OIL TO COAL CONVERSION UNITS LOCATED IN BOSTON MASSACHUSETTS. THE 388 MW (GROSS) BABCOCK AND WILCOX UNITS WILL FIRE SUBBITUMINOUS COAL (12,600 BTU/LB, 2.3% S). BIDS ARE CURRENTLY BEING REQUESTED/EVALUATED FOR A WET LIMESTONE FGD SYSTEM WITH GYPSUM GENERATED AS A SALEABLE BY PRODUCT. ESP'S WILL PROVIDE PARTICULATE CONTROL AND FLUE GAS WILL EXIT A 359 FT ACID BRICK LINED STACK. FORCED OXIDATION WILL BE UTILIZED FOR SLUDGE TREATMENT. UNIT 1 IS SCHEDULED TO START UP IN OCTOBER, 1987 AND UNIT 2 IN JUNE, 1988.
CAJUN ELECTRIC POWER OXBOW 1 NEW 540 MW (GROSS) 540 MW (ESC) COAL .60 %S LIGNITE LIME/SPRAY DRYING JOY MFG/NIRO ATOMIZER ENERGY CONSUMPTION: ****% STATUS 3 STARTUP 99/99	CAJUN ELECTRIC HAS PLANS TO CONSTRUCT A 540 MW UNIT, OXBOW 1, TO BE LOCATED IN DE SOTO PARISH, LOUISIANA. THE UTILITY HAS AWARDED A CONTRACT TO JOY MANUFACTURING/NIRO ATOMIZER FOR A LIME/SPRAY DRYING FGD SYSTEM TO CONTROL SO2 EMISSIONS FROM THE PULVERIZED COAL (.6% S, 6750 BTU/LB) FIRED BOILER. THE UNIT HAS BEEN DEFERRED INDEFINITELY.
CENTRAL ILLINOIS LIGHT DUCK CREEK 1 NEW 416 MW (GROSS) 416 MW (ESC) COAL 3.40 %S BITUMINOUS LIMESTONE ENVIRONEERING, RILEY STOKER ENERGY CONSUMPTION: 2.9% STATUS 1 STARTUP 7/76	DUCK CREEK 1 OF CENTRAL ILLINOIS LIGHT IS LOCATED IN CANTON, ILLINOIS. THE BALANCED DRAFT, FRONT FIRED, DRY BOTTOM UNIT BURNS PULVERIZED BITUMINOUS COAL (3.40% S, 10,396 BTU/LB) AND SUPPLIES 2,415,000 ACFM OF FLUE GAS TO TWO COLD SIDE ESP'S FOLLOWED BY FOUR RILEY STOKER/ENVIRONEERING ROD DECK SPRAY TOWER MODULES. THE LIMESTONE FGD SYSTEM HAS BEEN OPERATIONAL (AT LEAST ONE MODULE) SINCE JULY, 1976. IT IS DESIGNED TO REMOVE 85% OF THE SO2. HORIZONTAL CHEVRON MIST ELIMINATORS FOLLOW THE ABSORBERS, AND THE CLEANED GAS EXITS TO A 500 FOOT CEILCOTE LINED STACK WITHOUT REHEAT. SLUDGE FROM THE CLOSED WATER LOOP SYSTEM IS DIPOSED OF IN AN ON-SITE CLAY LINED POND.
CENTRAL ILLINOIS PUBLIC SERV NEWTON 1 NEW 617 MW (GROSS) 617 MW (ESC) COAL 3.00 %S BITUMINOUS DUAL ALKALI GE ENVIRONMENTAL SERVICES ENERGY CONSUMPTION: 2.4% STATUS 1 STARTUP 9/79	NEWTON 1 OF CENTRAL ILLINOIS PUBLIC SERVICE IS A TANGENTIALLY FIRED, DRY BOTTOM, PULVERIZED BITUMINOUS COAL (3.00% S, 10,900 BTU/LB) FIRED UNIT LOCATED IN NEWTON, ILLINOIS. A COLD SIDE ESP RECEIVES 2,163,480 ACFM OF FLUE GAS AND FEEDS IT TO FOUR GEESI POLYSPHERE PACKED TRAY TOWER ABSORBERS FOLLOWED BY TWO VERTICAL MIST ELIMINATORS PER MODULE. THE CLEANED GAS IS BOOSTED 25 DEG F BY A COMBINATION OF TWO DIFFERENT TYPES OF IN-LINE REHEATERS PLUS BYPASS REHEAT, AND THEN EXITS A 530 FOOT PRECRETE-LINED STACK. THE WATER LOOP IS CLOSED, AND THE SLUDGE IS POZ-O-TEC TREATED. OPERATIONS COMMENCED IN SEPTEMBER, 1979.
CENTRAL MAINE POWER SEARS ISLAND 1 NEW 600 MW (GROSS) 600 MW (ESC) COAL 2.23 %S BITUMINOUS PROCESS NOT SELECTED VENDOR NOT SELECTED ENERGY CONSUMPTION: ****% STATUS 6 STARTUP 11/95	SEARS ISLAND 1 IS A PLANNED UNIT TO BE BUILT ON PENOBSCOT BAY BY CENTRAL MAINE POWER. BECAUSE OF THE DISCOVERY OF A GEOLOGICAL FAULT ON SEARS ISLAND, PLANS FOR A 1150 MW NUCLEAR POWER PLANT HAVE BEEN REPLACED WITH PLANS FOR A 600 MW COAL (2.23% S, 12,500 BTU/LB) FIRED PLANT. LIME AND LIMESTONE SCRUBBING ARE THE PRIMARY METHODS BEING CONSIDERED FOR COMPLIANCE WITH THE NSPS. IT WILL BE TWO YEARS BEFORE ALL PERMITS REQUIRED HAVE BEEN RECEIVED. START UP IS SCHEDULED FOR NOVEMBER 1995.

SECTION 2
STATUS OF FGD SYSTEMS

UNIT IDENTIFICATION	ABSTRACT
CENTRAL POWER & LIGHT COLETO CREEK 2 NEW 720 MW (GROSS) 720 MW (ESC) COAL .39 %S SUBBITUMINOUS LIME/SPRAY DRYING JOY MFG/NIRO ATOMIZER ENERGY CONSUMPTION: ****% STATUS 3 STARTUP 10/93	COLETO CREEK 2 OF CENTRAL POWER AND LIGHT IS A COAL SUBBITUMINOUS (.39-.60% S) FIRED UNIT PLANNED FOR CONSTRUCTION IN FANNIN, TEXAS. A CONTRACT HAS BEEN AWARDED TO JOY MFG/NIRO ATOMIZER FOR A LIME/SPRAY DRYING FGD SYSTEM ON THIS UNIT. PARTICULATE MATTER WILL BE CONTROLLED VIA A RIGID FRAME COLD SIDE ESP. THE BOILER WILL BE SUPPLIED BY COMBUSTION ENGINEERING AND FLUE GAS WILL EXIT THROUGH A 450 FOOT STACK. SLUDGE WILL BE DISPOSED OF IN A LANDFILL. THE UNIT WILL BY CENTRAL AND SOUTHWEST SERVICES, BUT WILL BUT WILL BE OPERATED BY CENTRAL POWER & LIGHT. START UP IS TENTATIVELY SCHEDULED FOR OCTOBER 1993._1993.
CINCINNATI GAS & ELECTRIC EAST BEND 1 NEW 650 MW (GROSS) 650 MW (ESC) COAL 4.00 %S PROCESS NOT SELECTED VENDOR NOT SELECTED ENERGY CONSUMPTION: 2.9% STATUS 6 STARTUP 0/89	CINCINNATI GAS AND ELECTRIC HAS PLANS FOR A NEW UNIT, EAST BEND 1, TO BE LOCATED ADJACENT TO EAST BEND 2 AT THE RABBIT HASH, KENTUCKY SITE. THE COAL (4.00% S) FIRED BOILER WILL HAVE A GENERATING CAPACITY OF 650 MW AND FLUE GAS WILL EXIT THROUGH A 650 FT STACK. THE SYSTEM WILL OPERATE IN A CLOSED WATER LOOP MODE. START-UP IS SCHEDULED FOR 1989.
CINCINNATI GAS & ELECTRIC EAST BEND 2 NEW 650 MW (GROSS) 650 MW (ESC) COAL 2.60 %S BITUMINOUS LIME BABCOCK & WILCOX ENERGY CONSUMPTION: 2.9% STATUS 1 STARTUP 3/81	EAST BEND 2 OF CINCINNATI GAS AND ELECTRIC IS A PULVERIZED COAL (2.60% S, 11,000 BTU/LB) FIRED BOILER LOCATED IN RABBIT HASH, KENTUCKY. THE EMISSION CONTROL SYSTEM CONSISTS OF A HOT-SIDE ESP FOLLOWED BY THREE BABCOCK & WILCOX LIME FGD MODULES (87% SO2 REMOVAL EFFICIENCY). THE CLEANED GAS PASSES THROUGH A CHEVRON MIST ELIMINATOR BEFORE BEING HEATED BY AN INDIRECT AIR REHEATER AND EXITS THROUGH A BRICK LINED 650 FOOT STACK. THE SLUDGE FROM THIS CLOSED WATER LOOP IS POZ-O-TEC STABILIZED BEFORE DISPOSAL IN AN ON-SITE LANDFILL. OPERATIONS COMMENCED IN MARCH 1981.
CINCINNATI GAS & ELECTRIC ZIMMER 1 NEW 1386 MW (GROSS) 1386 MW (ESC) COAL 3.50 %S SUBBITUMINOUS PROCESS NOT SELECTED VENDOR NOT SELECTED ENERGY CONSUMPTION: ****% STATUS 6 STARTUP 0/91	CINCINNATI GAS AND ELECTRIC HAS PLANS FOR A NUCLEAR TO COAL CONVERSION UNIT LOCATED IN MOSCOW, OHIO. SO2 EMISSIONS FROM THE 1386 MW (GROSS) COAL FIRED BALANCED DRAFT BOILER WILL BE CONTROLLED WITH FGD. INITIAL START-UP IS TENTATIVELY SCHEDULED FOR 1991.
COLORADO UTE ELECTRIC CRAIG 1 NEW 455 MW (GROSS) 455 MW (ESC) COAL .45 %S SUBBITUMINOUS LIMESTONE PEABODY PROCESS SYSTEMS ENERGY CONSUMPTION: 1.3% STATUS 1 STARTUP 10/80	THE COLORADO UTE ELECTRIC ASSN HAS CONSTRUCTED A NEW UNIT, CRAIG 1, LOCATED IN CRAIG, COLORADO. CRAIG 1 FIRES PULVERIZED SUBBITUMINOUS COAL (0.45% S, 10,000 BTU/LB). THE EMISSION CONTROL SYSTEM FOR THIS UNIT CONSISTS OF A HOT SIDE ESP AND FOUR LIMESTONE SPRAY TOWERS (PEABODY PROCESS SYSTEMS) FOR REMOVAL OF PARTICULATE MATTER AND 85% OF THE SO2. THE SCRUBBER EXHAUST IS REHEATED BYPASS GAS AND PASSES THROUGH A 600 FOOT ACID LINED STACK. THE SYSTEM OPERATES IN A CLOSED WATER LOOP AND THE STABILIZED SLUDGE IS DISPOSED OF IN AN OFF-SITE MINEFILL. UNIT 1 HAS BEEN OPERATING SINCE OCTOBER 1980.
COLORADO UTE ELECTRIC CRAIG 2 NEW 455 MW (GROSS) 455 MW (ESC) COAL .45 %S SUBBITUMINOUS LIMESTONE PEABODY PROCESS SYSTEMS ENERGY CONSUMPTION: 1.3% STATUS 1 STARTUP 12/79	THE CRAIG 2 UNIT OF THE COLORADO UTE ELECTRIC ASSN IS LOCATED IN CRAIG, COLORADO AND FIRES PULVERIZED SUBBITUMINOUS COAL (0.45%S, 10,000 BTU/LB). THE EMISSION CONTROL SYSTEM FOR THIS UNIT CONSISTS OF A HOT SIDE ESP AND FOUR PEABODY PROCESS SYSEMS LIMESTONE SPRAY TOWERS FOR REMOVAL OF PARTICULATE AND 85% OF THE SO2. THE SCRUBBER EXHAUST IS HEATED BY A BYPASS REHEATER AND PASSES THROUGH A 600 FOOT ACID BRICK LINED STACK. THE SYSTEM OPERATES IN A CLOSED LOOP, AND THE STABILIZED SLUDGE IS DISPOSED OF IN AN OFF-SITE MINEFILL. START-UP OF UNIT 2 WAS IN DECEMBER 1979.

SECTION 2
STATUS OF FGD SYSTEMS

UNIT IDENTIFICATION	ABSTRACT
COLORADO UTE ELECTRIC CRAIG 3 NEW 447 MW (GROSS) 447 MW (ESC) COAL .45 %S SUBBITUMINOUS LIME/SPRAY DRYING BABCOCK & WILCOX ENERGY CONSUMPTION: ****% STATUS 1 STARTUP 6/84	CRAIG 3 OF COLORADO UTE ELECTRIC ASSN. IS LOCATED IN CRAIG, COLORADO. THE UNIT, SUPPLIED BY BABCOCK & WILCOX FIRES PULVERIZED SUBBITUUMINOUS COAL (0.45% S, 10,000 BTU/LB). THE DRY SCRUBBING SYSTEM UTILIZING LIME/SPRAY DRYING WITH A DESIGN REMOVAL EFFICIENCY OF 85% IS SUPPLIED BY BABCOCK AND WILCOX. THE UNIT HAS A FABRIC FILTER FOR PARTICULATE MATTER_B CONTROL AND FLUE GAS EXITS A 600 FT STACK. OPERATION OF THE FGD SYSTEM COMMENCED IN JUNE 1984.
COLUMBUS & SOUTHERN OHIO ELEC CONESVILLE 5 NEW 405 MW (GROSS) 350 MW (ESC) COAL 4.50 %S BITUMINOUS LIME AIR CORRECTION DIVISION, UOP ENERGY CONSUMPTION: 1.7% STATUS 1 STARTUP 1/77	CONESVILLE 5 OF COLUMBUS AND SOUTHERN OHIO ELECTRIC IS A DRY BOTTOM, PULVERIZED BITUMINOUS COAL (4.50% S, 10,850 BTU/LB) FIRED UNIT LOCATED IN CONESVILLE, OHIO. A COLD SIDE ESP RECEIVES 1,393,893 ACFM OF FLUE GAS AND PASSES IT TO TWO THIOSORBIC LIME TCA MODULES SUPPLIED BY UOP. THE SO2 REMOVAL EFFICIENCY OF THE TWO MODULES, WHICH BEGAN INITIAL OPERATION IN JANUARY 1977, IS 89.5% (DESIGN). EACH MODULE HAS ONE BULK ENTRAINMENT SEPARATOR AND TWO CHEVRON MIST ELIMINATORS. THE CLEANED GAS EXITS THROUGH AN 800 FOOT ACID BRICK LINED STACK. THE POZ-O-TEC STABILIZED SLUDGE IS PUMPED INTO AN ON-SITE DIKED LAND-FILL. THE SYSTEM OPERATES IN A CLOSED WATER LOOP.
COLUMBUS & SOUTHERN OHIO ELEC CONESVILLE 6 NEW 405 MW (GROSS) 350 MW (ESC) COAL 4.50 %S BITUMINOUS LIME AIR CORRECTION DIVISION, UOP ENERGY CONSUMPTION: 1.7% STATUS 1 STARTUP 6/78	CONESVILLE 6 OF COLUMBUS AND SOUTHERN OHIO ELECTRIC IS A DRY BOTTOM, PULVERIZED BITUMINOUS COAL (4.50% S, 10,850 BTU/LB) FIRED UNIT LOCATED IN CONESVILLE, OHIO. A COLD SIDE ESP RECEIVES 1,393,893 ACFM OF FLUE GAS AND PASSES IT TO TWO THIOSORBIC LIME TCA MODULES SUPPLIED BY UOP. THE SO2 REMOVAL EFFICIENCY OF THE TWO MODULES, WHICH BEGAN INITIAL OPERATION IN JUNE 1978, IS 89.5% (DESIGN). EACH MODULE HAS ONE BULK ENTRAINMENT SEPARATOR AND TWO CHEVRON MIST ELIMINATORS. THE CLEANED GAS EXITS THROUGH AN 800 FOOT ACID BRICK LINED STACK. THE POZ-O-TEC STABILIZED SLUDGE IS PUMPED INTO AN ON-SITE DIKED LAND-FILL. THE SYSTEM OPERATES IN A CLOSED WATER LOOP.
COOPERATIVE POWER N/D 1 NEW 750 MW (GROSS) 750 MW (ESC) COAL ***** %S LIMESTONE VENDOR NOT SELECTED ENERGY CONSUMPTION: ****% STATUS 6 STARTUP 0/94	COOPERATIVE POWER HAS PLANS TO CONSTRUCT A 750 MW (GROSS) UNIT IN OHIO. THE FACILITY NAME HAS NOT YET BEEN DECIDED NOR HAS THE SITE LOCATION BEEN FINALIZED. THE UNIT IS EXPECTED TO FIRE OHIO COAL. A WET LIMESTONE FGD SYSTEM WILL BE EMPLOYED TO CONTROL SO2 EMISSIONS AND PARTICLE MATTER WILL BE CONTROLLED BY ESP'S. INITIAL START-UP IS TENTATIVELY SCHEDULED FOR 1994.
COOPERATIVE POWER ASSOCIATION COAL CREEK 1 NEW 550 MW (GROSS) 327 MW (ESC) COAL .63 %S LIGNITE LIME/ALKALINE FLYASH COMBUSTION ENGINEERING ENERGY CONSUMPTION: .2% STATUS 1 STARTUP 7/79	COAL CREEK 1 AND 2, LOCATED IN UNDERWOOD, NORTH DAKOTA ARE TWO PULVERIZED LIGNITE (0.63% S, 6258 BTU/LB) FIRED UNITS OWNED BY THE COOPERATIVE POWER ASSN AND UNITED POWER. A COLD SIDE ESP RECEIVES 2,200,000 ACFM OF FLUE GAS AND EXHAUSTS IT TO FOUR COUNTERCURRENT SPRAY TOWERS SUPPLIED BY COM-BUSTION ENGINEERING. MIST ELIMINATION IS PROVIDED BY A BULK ENTRAINMENT SEPARATOR AND TWO CHEVRON MIST ELIMINATORS. A MINIMUM OF 40% BYPASS RE-HEAT IS PROVIDED BEFORE THE CLEANED GAS EXITS A 658 FT ACID BRICK LINED STACK. THE LIME/ALKALINE FLYASH SYSTEM DESIGN SO2 REMOVAL EFFICIENCY IS 90%. IT OPERATES IN AN OPEN WATER LOOP, AND THE FLYASH FIXATED SLUDGE IS DISPOSED OF IN A CLAY LINED POND. UNIT 1 OPERATIONS BEGAN IN JULY 1979.
COOPERATIVE POWER ASSOCIATION COAL CREEK 2 NEW 550 MW (GROSS) 327 MW (ESC) COAL .63 %S LIGNITE LIME/ALKALINE FLYASH COMBUSTION ENGINEERING ENERGY CONSUMPTION: .2% STATUS 1 STARTUP 7/80	COAL CREEK 1 AND 2, LOCATED IN UNDERWOOD, NORTH DAKOTA ARE TWO PULVERIZED LIGNITE (0.63% S, 6258 BTU/LB) FIRED UNITS OWNED BY THE COOPERATIVE POWER ASSN AND UNITED POWER. A COLD SIDE ESP RECEIVES 2,200,000 ACFM OF FLUE GAS AND EXHAUSTS IT TO FOUR COUNTERCURRENT SPRAY TOWERS SUPPLIED BY COM-BUSTION ENGINEERING. MIST ELININATION IS PROVIDED BY A BULK ENTRAINMENT SEPARATOR AND TWO CHEVRON MIST ELIMINATORS. A MINIMUM OF 40% BYPASS RE-HEAT IS PROVIDED BEFORE THE CLEANED GAS EXITS A 658 FT ACID BRICK LINED STACK. THE LIME/ALKALINE FLYASH SYSTEM DESIGN SO2 REMOVAL EFFICIENCY IS 90%. IT OPERATES IN AN OPEN WATER LOOP, AND THE FLYASH STABILIZED SLUDGE IS DISPOSED OF IN A CLAY LINED POND. UNIT 2 COMMENCED OPERATIONS IN JULY, 1980.

SECTION 2
STATUS OF FGD SYSTEMS

UNIT IDENTIFICATION	ABSTRACT
DELMARVA POWER & LIGHT DELAWARE CITY 1 RETROFIT 60 MW (GROSS) 60 MW (ESC) COKE 7.00 %S BITUMINOUS WELLMAN LORD DAVY MCKEE ENERGY CONSUMPTION: ****% STATUS 1 STARTUP 5/80	DELAWARE CITY 1, 2, AND 3 OF DELMARVA POWER AND LIGHT ARE THREE RETROFITTED COKE (7.0% S, 14,000 BTU/LB) FIRED BOILERS WHICH HAVE A STEAM CAPACITY OF 500K LB/HR EACH. THE BOILERS GENERATE STEAM AS WELL AS ELECTRICITY FOR GETTY REFINING AND MARKETING. EACH BOILER SUPPLIES 295,000 ACFM OF FLUE GAS TO A MECHANICAL COLLECTOR THEN TO A VENTURI PARTICLE SCRUBBER FOR PARTICULATE CONTROL. THE FLUE GAS THEN PASSES THROUGH A CHEVRON TYPE MIST ELIMINATOR TO A WET ESP FOR BOTH PARTICULATE AND ACID MIST REMOVAL. A FOUR STAGE WELLMAN-LORD SYSTEM, WHICH IS DESIGNED FOR 90% REMOVAL, IS USED FOR SO2 CONTROL. HOT AIR INJECTION REHEAT IS USED BEFORE THE GAS EXITS OUT A 500 FT STACK. THE EMISSION CONTROL SYSTEM IS SUPPLIED BY DAVY MCKEE. IT IS A CLOSED LOOP WATER SYSTEM. THE SYSEM BEGAN OPERATING IN MAY 1980.
DELMARVA POWER & LIGHT DELAWARE CITY 2 RETROFIT 60 MW (GROSS) 60 MW (ESC) COKE 7.00 %S BITUMINOUS WELLMAN LORD DAVY MCKEE ENERGY CONSUMPTION: ****% STATUS 1 STARTUP 5/80	DELAWARE CITY 1, 2, AND 3 OF DELMARVA POWER AND LIGHT ARE THREE RETROFITTED COKE (7.0% S) FIRED BOILERS WHICH HAVE A STEAM CAPACITY OF 500K LB/HR EACH. THE BOILERS GENERATE STEAM AS WELL AS ELECTRICITY FOR GETTY REFINING AND MARKETING. EACH BOILER SUPPLIES 295,000 ACFM OF FLUE GAS TO A MECHANICAL COLLECTOR THEN TO A VENTURI PARTICLE SCRUBBER FOR PARTICULATE CONTROL. THE FLUE GAS THEN PASSES THROUGH A CHEVRON TYPE MIST ELIMINATOR TO A WET ESP FOR BOTH PARTICULATE AND ACID MIST REMOVAL. A FOUR STAGE WELLMAN-LORD SYSTEM DESIGNED FOR 90% REMOVAL, IS USED FOR SO2 CONTROL. HOT AIR INJECTION REHEAT IS USED BEFORE THE GAS EXITS OUT A 500 FT. STACK. THE EMISSION CONTROL SYSTEM IS SUPPLIED BY DAVY MCKEE. IT IS A CLOSED LOOP WATER SYSTEM. THE SYSTEM BECAME OPERATIONAL IN MAY 1980.
DELMARVA POWER & LIGHT DELAWARE CITY 3 RETROFIT 60 MW (GROSS) 60 MW (ESC) COKE 7.00 %S BITUMINOUS WELLMAN LORD DAVY MCKEE ENERGY CONSUMPTION: ****% STATUS 1 STARTUP 5/80	DELAWARE CITY 1, 2, AND 3 OF DELMARVA POWER AND LIGHT ARE THREE RETROFITTED COKE (7.0% S) FIRED BOILERS WHICH HAVE A STEAM CAPACITY OF 500K LB/HR EACH. THE BOILERS GENERATE STEAM AS WELL AS ELECTRICITY FOR GETTY REFINING AND MARKETING. EACH BOILER SUPPLIES 295,000 ACFM OF FLUE GAS TO A MECHANICAL COLLECTOR THEN TO A VENTURI PARTICLE SCRUBBER FOR PARTICULATE CONTROL. THE FLUE GAS THEN PASSES THROUGH A CHEVRON TYPE MIST ELIMINATOR TO A WET ESP FOR BOTH PARTICULATE AND ACID MIST REMOVAL. A FOUR STAGE WELLMAN-LORD SYSTEM DESIGNED FOR 90% REMOVAL, IS USED FOR SO2 CONTROL. HOT AIR INJECTION REHEAT IS USED BEFORE THE GAS EXITS OUT A 500 FT. STACK. THE EMISSION CONTROL SYSTEM IS SUPPLIED BY DAVY MCKEE. IT IS A CLOSED LOOP WATER SYSTEM. THE SYSTEM BECAME OPERATIONAL IN MAY 1980.
DELMARVA POWER & LIGHT VIENNA 9 NEW 550 MW (GROSS) 550 MW (ESC) COAL 2.50 %S BITUMINOUS PROCESS NOT SELECTED VENDOR NOT SELECTED ENERGY CONSUMPTION: 2.7% STATUS 6 STARTUP 0/95	DELMARVA POWER AND LIGHT IS PLANNING A NEW 550 MW (GROSS) UNIT, VIENNA 9, TO BE CONSTRUCTED IN VIENNA, MARYLAND. THE UTILITY IS PRESENTLY CONSIDERING A LIMESTONE FGD UNIT FOR SO2 CONTROL AND AN ESP FOR PARTICULATE REMOVAL. THE PULVERIED COAL (2.5% S, 12,200 BTU/LB) FIRED UNIT IS EXPECTED TO COMMENCE OPERATIONS IN MAY 1995.
DESERET GEN & TRANS BONANZA 1 NEW 410 MW (GROSS) 410 MW (ESC) COAL .50 %S BITUMINOUS LIMESTONE COMBUSTION ENGINEERING ENERGY CONSUMPTION: 2.9% STATUS 1 STARTUP 9/84	BONANZA 1, OF DESERET GEN. & TRANS. IS A 410 MW (GROSS) UNIT LOCATED IN VERNAL UTAH. THE PULVERIZED COAL (10,500 BTU/LB, .5% S) FIRED BOILER SUPPLIES FLUE GAS TO A COMBUSTION ENGINERING WET LIMESTONE FGD SYSTEM WITH A DESIGN SO2 REMOVAL EFFICIENCY OF 95%. PARTICULATE MATTER IS CONTROLLED WITH AN ECOLAIRE FABRIC FILTER AT 99.6% DESIGN REMOVBAL EFFICIENCY. THE SYSTEM OPERATES IN A CLOSED WATER LOOP MODE AND SLUDGE IS DISPOSED AT AN ON-SITE LANDFILL. OPERATIONS COMMENCED IN SEPTEMBER 1984.
DESERET GEN & TRANS BONANZA 2 NEW 410 MW (GROSS) 410 MW (ESC) COAL .50 %S BITUMINOUS LIMESTONE VENDOR NOT SELECTED ENERGY CONSUMPTION: 2.9% STATUS 6 STARTUP 0/92	BONANZA (FORMERLY MOON LAKE) 2 IS A PULVERIZED COAL (.5% S, 10,500 BTU/LB) FIRED UNIT PLANNED BY DESERET GENERATION & TRANS. COOP TO BE LOCATED IN VERNAL, UTAH. A WET LIMESTONE SCRUBBING SYSTEM WITH AN SO2 REMOVAL EFFICIENCY OF 95% WILL BE EMPLOYED FOR SO2 CONTROL. THE SYSTEM WILL FEATURE A BAGHOUSE DESIGNED TO REMOVE 99.6% OF THE PARTICULATE. THE UNIT WILL OPERATE IN A CLOSED WATER LOOP WITH SLUDGE DISPOSAL ON-SITE IN A LANDFILL. OPERATIONS ARE SCHEDULED TO COMMENCE IN 1992.

SECTION 2
STATUS OF FGD SYSTEMS

UNIT IDENTIFICATION	ABSTRACT
DUQUESNE LIGHT ELRAMA 1-4 RETROFIT 510 MW (GROSS) 510 MW (ESC) COAL 2.05 %S BITUMINOUS LIME GE ENVIRONMENTAL SERVICES ENERGY CONSUMPTION: 1.4% STATUS 1 STARTUP 10/75	ELRAMA 1-4 OF DUQUESNE LIGHT CONSISTS OF FOUR PULVERIZED COAL (2.05% S, 11,568 BTU/LB) FIRED UNITS LOCATED IN ELRAMA, PENNSYLVANIA. THE RETROFIT EMISSION CONTROL SYSTEM FOR EACH UNIT CONSISTS OF MECHANICAL COLLECTORS FOLLOWED BY ESP'S AND FIVE VARIABLE THROAT VENTURI LIME ABSORBER MODULES SUPPLIED BY GEESI, WHICH ARE DESIGNED TO REMOVE 83% OF THE SO2 FROM THE FLUE GAS. THE CLEANED GAS EXITS VIA A 398 FOOT ACID BRICK LINED STACK. THE SYSTEM OPERATES IN AN OPEN WATER LOOP AND THE POZ-O-TEC STABILIZED SLUDGE IS HAULED TO AN OFF-SITE LANDFILL. THE SYSTEM HAS BEEN OPERATIONAL SINCE OCTOBER 1975.
DUQUESNE LIGHT PHILLIPS 1-6 RETROFIT 408 MW (GROSS) 408 MW (ESC) COAL 2.05 %S BITUMINOUS LIME GE ENVIRONMENTAL SERVICES ENERGY CONSUMPTION: 3.4% STATUS 1 STARTUP 7/73	THE PHILLIPS POWER STATION OF DUQUESNE LIGHT CONSISTS OF SIX DRY BOTTOM PULVERIZED COAL (2.05% S, 11568 BTU/LB) FIRED UNITS LOCATED IN SOUTH HEIGHTS, PENNSYLVANIA. PARTICULATE CONTROL IS ACCOMPLISHED BY SIX MECHANICAL COLLECTORS FOLLOWED BY SIX ESP'S (ONE/BOILER). ONE TWO STAGE AND THREE SINGLE STAGE VARIABLE THROAT VENTURI LIME FGD MODULES SUPPLIED BY GEESI ARE DESIGNED TO REMOVE 83% OF THE SO2 FROM THE FLUE GAS. THE CLEANED FLUE GAS PASSES THROUGH TWO CHEVRON MIST ELIMINATORS (EACH MODULE) AND EXITS VIA A 340 FT ACID BRICK LINED STACK. THE RETROFIT SYSTEM OPERATES IN AN OPEN WATER LOOP, AND THE POZ-O-TEC STABILIZED SLUDGE IS TRUCKED TO AN OFF-SITE LANDFILL. THE SYSTEM HAS BEEN OPERATIONAL SINCE JULY 1973.
EAST KENTUCKY POWER J.K. SMITH 1 NEW 650 MW (GROSS) 650 MW (ESC) COAL 1.50 %S BITUMINOUS LIME BABCOCK & WILCOX ENERGY CONSUMPTION: ****% STATUS 3 STARTUP 0/92	THE EAST KENTUCKY POWER COOP HAS PLANS TO BUILD A NEW UNIT, J.K. SMITH 1, IN WINCHESER, KENTUCKY. A CONTRACT WAS AWARDED TO BABCOCK & WILCOX FOR A WET LIME PROCESS TO CONTROL SO2 EMISSIONS. AN ESP WILL BE EMPLOYED FOR PARTICULATE REMOVAL AND THE SYSTEM WILL OPERATE IN A CLOSED WATER LOOP. INITIAL START-UP IS EXPECTED IN 1992.
EAST KENTUCKY POWER SPURLOCK 2 NEW 500 MW (GROSS) 500 MW (ESC) COAL 3.50 %S LIME THYSSEN/CEA ENERGY CONSUMPTION: ****% STATUS 1 STARTUP 12/82	SPURLOCK 2 OF EAST KENTUCKY POWER COOPERATIVE IS A BALANCED DRAFT PULVERIZED COAL (3.5% S, 11,000 BTU/LB) FIRED UNIT LOCATED IN MAYSVILLE, KY. THE EMISSION CONTROL SYSTEM CONSISTS OF AN ESP FOLLOWED BY A THYSSEN/CEA LIME FGD SYSTEM (90% DESIGN SO2 REMOVAL EFFICIENCY). FLUE GAS FROM UNIT 1 IS USED TO REHEAT THE CLEANED GAS WHICH EXITS THROUGH AN 802 FT STACK. THE CLOSED WATER LOOP SYSTEM EMPLOYS A POZ-O-TEC SLUDGE STABILIZATION FACILITY. UNIT 2 OPERATIONS COMMENCED IN DECEMBER 1982.
FLORIDA POWER & LIGHT MARTIN 3 NEW 800 MW (GROSS) 800 MW (ESC) COAL ***** %S PROCESS NOT SELECTED VENDOR NOT SELECTED ENERGY CONSUMPTION: ****% STATUS 6 STARTUP 0/94	FLORIDA POWER AND LIGHT HAS PLANS FOR TWO NEW UNITS, MARTIN 3 AND 4 TO BE LOCATED IN MARTIN COUNTY, FLORIDA. THE PULVERIZED COAL FIRED BOILERS WILL HAVE A MW RATING OF 800 EACH. THE UTILITY IS PRESENTLY CONSIDERING ONLY FGD AS THE EMISSION CONTROL STRATEGY. THE START-UP FOR UNIT 3 IS PROJECTED FOR 1994.
FLORIDA POWER & LIGHT MARTIN 4 NEW 800 MW (GROSS) 800 MW (ESC) COAL ***** %S PROCESS NOT SELECTED VENDOR NOT SELECTED ENERGY CONSUMPTION: ****% STATUS 6 STARTUP 0/95	FLORIDA POWER AND LIGHT HAS PLANS FOR TWO NEW UNITS, MARTIN 3 AND 4 TO BE LOCATED IN MARTIN COUNTY, FLORIDA. THE PULVERIZED COAL FIRED BOILERS WILL HAVE A MW RATING OF 800 EACH. THE UTILITY IS PRESENTLY CONSIDERING ONLY FGD AS THE EMISSION CONTROL STRATEGY. THE START-UP FOR UNIT 4 IS PROJECTED FOR 1995.

SECTION 2
STATUS OF FGD SYSTEMS

UNIT IDENTIFICATION	ABSTRACT
GENERAL PUBLIC UTILITIES COAL 1 NEW 690 MW (GROSS) 690 MW (ESC) COAL 2.00 %S LIMESTONE VENDOR NOT SELECTED ENERGY CONSUMPTION: ****% STATUS 6 STARTUP 0/93	GENERAL PUBLIC UTILITIES HAS PLANS FOR A 625 MW UNIT, COAL 1, TO BE LOCATED IN FORKED RIVER NEW JERSEY. THE PULVERIZED COAL (2.0% S, 13,800 BTU/LB) FIRED BABCOCK & WILCOX UNIT WILL HAVE A GROSS RATING OF 625 MW AND WILL UTILIZE A WET LIMESTONE FGD SYSTEM FOR CONTROL OF SO2 EMISSIONS. PARTICULATE MATTER WILL BE CONTROLLED WITH AN ESP. THE SYSTEM WILL OPERATE IN A CLOSED WATER LOOP MODE AND FLUE GAS WILL EXIT A 650 FT STACK. START-UP IS SCHEDULED FOR 1993.
GENERAL PUBLIC UTILITIES COAL 2 NEW 690 MW (GROSS) 690 MW (ESC) COAL 3.50 %S LIMESTONE VENDOR NOT SELECTED ENERGY CONSUMPTION: ****% STATUS 6 STARTUP 0/97	GENERAL PUBLIC UTILITIES IS PLANNING TO CONSTRUCT A 690 MW UNIT, COAL 2, IN THE WESTERN U.S. THE UTILITY IS PRESENTLY CONSIDERING A WET LIMESTONE FGD SYSTEM AS THE EMISSION CONTROL STRATEGY. THE COAL FIRED (3.5% S) UNIT IS SCHEDULED TO COMMENCE OPERATIONS IN 1997.
GRAND HAVEN BRD OF LIGHT & PWR J.B. SIMS 3 NEW 65 MW (GROSS) 65 MW (ESC) COAL 2.75 %S BITUMINOUS LIME BABCOCK & WILCOX ENERGY CONSUMPTION: ****% STATUS 1 STARTUP 5/83	J.B. SIMS 3 OF GRAND HAVEN BOARD OF LIGHT AND POWER IS A BITUMINOUS COAL (2.75% S, 11,000 BTU/LB) FIRED UNIT LOCATED IN GRAND HAVEN, MICHIGAN. THE BABCOCK & WILCOX EMISSION CONTROL SYSTEM CONSISTS OF TWO LIME SPRAY TOWERS WITH AN SO2 REMOVAL EFFICIENCY OF 90-95%. EACH TOWER IS EQUIPPED WITH A CHEVRON MIST ELIMINATOR FOLLOWED BY AN IN-LINE REHEATER. AN ESP IS EMPLOYED FOR PARTICULATE CONTROL AND FLUE GAS EXITS A 360 FT STACK. IT OPERATES IN A CLOSED WATER LOOP MODE AND THE SLUDGE IS DISPOSED OF IN AN OFF-SITE LANDFILL. INITIAL OPERATIONS OF THE FGD SYSTEM BEGAN IN MAY 1983.
GRAND RIVER DAM AUTHORITY GRDA 2 NEW 575 MW (GROSS) 520 MW (ESC) COAL .95 %S SUBBITUMINOUS LIME/SPRAY DRYING FLAKT ENERGY CONSUMPTION: ****% STATUS 2 STARTUP 3/85	GRDA 2 OF GRAND RIVER DAM AUTHORITY IS A 575 MW (GROSS) UNIT UNDER CONSTRUCTION IN PRYOR, OKLAHOMA. FLAKT IS SUPPLYING A TURNKEY LIME/SPRAY DRYING FGD SYSTEM CONSISTING OF FOUR SPRAY DRYERS WITH THREE ROTARY ATOMIZERS EACH FOLLOWED BY TWO ESP'S FOR PARTICULATE (FLY ASH AND REACTOR PRODUCT) REMOVAL. INITIAL START-UP IS SCHEDULED FOR MARCH 1985.
HOOSIER ENERGY MEROM 1 NEW 490 MW (GROSS) 441 MW (ESC) COAL 3.50 %S BITUMINOUS LIMESTONE MITSUBISHI HEAVY INDUSTRIES ENERGY CONSUMPTION: 1.2% STATUS 1 STARTUP 8/82	MEROM 1, OF HOOSIER ENERGY IS LOCATED IN MEROM, INDIANA. THIS PULVERIZED COAL (3.5% S) FIRED UNIT PRODUCES 866,000 ACFM OF FLUE GAS WHICH IS BEING CLEANED BY A COLD SIDE ESP UPSTREAM OF A MITSUBISHI LIMESTONE GRID TOWER ABSORBER (90% DESIGN SO2 REMOVAL). THE SYSTEM UTILIZES BYPASS REHEAT AND A 702 FOOT STACK. THE SLUDGE IS BEING FORCIBLY OXIDIZED AND LANDFILLED, AND THE SYSTEM OPERATES IN A CLOSED WATER LOOP MODE. UNIT 1 COMMENCED OPERATIONS IN AUGUST 1982.
HOOSIER ENERGY MEROM 2 NEW 490 MW (GROSS) 441 MW (ESC) COAL 3.50 %S BITUMINOUS LIMESTONE MITSUBISHI HEAVY INDUSTRIES ENERGY CONSUMPTION: 1.2% STATUS 1 STARTUP 12/81	MEROM 2, OF HOOSIER ENERGY IS LOCATED IN MEROM, INDIANA. THIS PULVERIZED COAL (3.5% S) FIRED UNIT PRODUCES 866,000 ACFM OF FLUE GAS WHICH IS BEING CLEANED BY A COLD SIDE ESP UPSTREAM OF A MITSUBISHI LIMESTONE GRID TOWER ABSORBER (90% DESIGN SO2 REMOVAL). THE SYSTEM UTILIZES BYPASS REHEAT AND A 702 FOOT STACK. THE SLUDGE IS BEING FORCIBLY OXIDIZED AND LANDFILLED, AND THE SYSTEM OPERATES IN A CLOSED WATER LOOP MODE. UNIT 2 COMMENCED OPERATIONS IN DECEMBER 1981.

SECTION 2
STATUS OF FGD SYSTEMS

UNIT IDENTIFICATION	ABSTRACT
HOUSTON LIGHTING & POWER LIMESTONE 1 NEW 750 MW (GROSS) 750 MW (ESC) COAL 1.08 %S LIGNITE LIMESTONE COMBUSTION ENGINEERING ENERGY CONSUMPTION: ****% STATUS 2 STARTUP 12/85	HOUSTON LIGHTING AND POWER CO HAS PLANS FOR TWO NEW UNITS, LIMESTONE 1 AND 2, UNDER CONSTRUCTION IN JEWITT TEXAS. THE PULVERIZED COAL (1.08% S, 6177 BTU/LB) FIRED BOILER WILL UTILIZE A WET LIMESTONE SCRUBBING PROCESS FOR PRIMARY SO2 COLLECTION. A COLD SIDE ESP WILL ALSO BE USED FOR PRIMARY PARTICLE CONTROL. THE SYSTEM WILL OPERATE IN A CLOSED WATER LOOP MODE AND FLUE GAS WILL EXIT THROUGH A 563 FT STACK. THE UILITY AWARDED A CONTRACT TO COMBUSTION ENGINEERING FOR THE INSTALLATION OF THIS SYSTEM. UNIT 1 IS SCHEDULED TO COMMENCE OPERATIONS IN DECEMBER 1985.
HOUSTON LIGHTING & POWER LIMESTONE 2 NEW 750 MW (GROSS) 750 MW (ESC) COAL 1.08 %S LIMESTONE COMBUSTION ENGINEERING ENERGY CONSUMPTION: ****% STATUS 2 STARTUP 12/86	HOUSTON LIGHTING AND POWER CO HAS PLANS FOR TWO NEW UNITS, LIMESTONE 1 AND 2, UNDER CONSTRUCTION IN JEWITT, TEXAS. THE PULVERIZED COAL (1.08% S, 6177 BTU/LB) FIRED BOILER WILL UTILIZE A WET LIMESTONE SCRUBBING PROCESS FOR PRIMARY SO2 COLLECTION. A COLD SIDE ESP WILL BE USED FOR PRIMARY PARTICLE CONTROL. THE SYSTEM WILL OPERATE IN A CLOSED WATER LOOP MODE AND FLUE GAS WILL EXIT THROUGH A 563 FT STACK. THE UTILITY AWARDED A CONTRACT TO COMBUSTION ENGINEERING FOR THE INSTALLATION OF THIS SYSTEM. UNIT 2 IS SCHEDULED TO COMMENCE OPERATIONS IN DECEMBER 1986.
HOUSTON LIGHTING & POWER MALAKOFF 1 NEW 690 MW (GROSS) 690 MW (ESC) COAL 1.10 %S LIGNITE LIMESTONE GE ENVIRONMENTAL SERVICES ENERGY CONSUMPTION: ****% STATUS 3 STARTUP 12/89	HOUSTON LIGHTING AND POWER HAS PLANS FOR TWO NEW UNITS, MALAKOFF 1 AND 2, TO BE LOCATED IN MALAKOFF, TEXAS. EACH PULVERIZED COAL (1.1% S, 6112 BTU/LB LIGNITE) FIRED BABCOCK & WILCOX BOILER WILL UTILIZE A WET LIMESTONE SCRUBBING PROCESS FOR SO2 CONTROL. A COLD SIDE ESP SUPPLIED BY WHEELABRATOR FRYE WILL CONTROL PARTICULATE MATTER. THE CLEANED FLUE GAS WILL EXIT THROUGH A 625 FOOT ACID RESISTANT BRICK LINED STACK. THE UTILITY HAS AWARDED A CONTRACT TO GE ENVIRONMENTAL SERVICES FOR INSTALLATION OF THE FGD SYSTEMS. UNIT 1 IS SCHEDULED TO COMMENCE OPERATIONS IN DECEMBER 1989.
HOUSTON LIGHTING & POWER MALAKOFF 2 NEW 690 MW (GROSS) 690 MW (ESC) COAL 1.10 %S LIGNITE LIMESTONE GE ENVIRONMENTAL SERVICES ENERGY CONSUMPTION: ****% STATUS 3 STARTUP 12/90	HOUSTON LIGHTING AND POWER HAS PLANS FOR TWO NEW UNITS, MALAKOFF 1 AND 2, TO BE LOCATED IN MALAKOFF, TEXAS. EACH PULVERIZED COAL (1.1% S, 6112 BTU/LB LIGNITE) FIRED BABCOCK & WILCOX BOILER WILL UTILIZE A WET LIMESTONE SCRUBBING PROCESS FOR SO2 CONTROL. A COLD SIDE ESP SUPPLIED BY WHEELABRATOR FRYE WILL CONTROL PARTICULATE MATTER. THE CLEANED FLUE GAS WILL EXIT THROUGH A 625 FOOT ACID RESISTANT BRICK LINED STACK. THE UTILITY HAS AWARDED A CONTRACT TO GE ENVIRONMENTAL SERVICES FOR INSTALLATION OF THE FGD SYSTEMS. UNIT 2 IS SCHEDULED TO COMMENCE OPERATIONS IN DECEMBER 1990.
HOUSTON LIGHTING & POWER W.A. PARISH 8 NEW 600 MW (GROSS) 492 MW (ESC) COAL .41 %S SUBBITUMINOUS LIMESTONE GE ENVIRONMENTAL SERVICES ENERGY CONSUMPTION: 1.0% STATUS 1 STARTUP 10/82	W.A. PARISH 8 OF HOUSTON LIGHTING & POWER IS A PULVERIZED COAL (0.41% S, 8942 BTU/LB) FIRED UNIT LOCATED IN BOOTH, TEXAS. GEESI HAS SUPPLIED A LIMESTONE FGD SYSTEM THAT REMOVES 82% OF THE FLUE GAS SO2. FABRIC FILTERS ARE EMPLOYED FOR PARTICULATE CONTROL AND REHEAT IS PROVIDED BY BYPASSING 18% OF THE CLEANED FLUE GAS. SLUDGE IS DEWATERED, BLENDED WITH FLYASH, AND DISPOSED OF IN AN ON-SITE LANDFILL. THE SYSTEM OPERATES IN A CLOSED WATER LOOP MODE AND FLUE GAS EXITS THROUGH A 500 FT STACK. THE UNIT HAS BEEN OPERATINAL SINCE OCTOBER 1982.
INDIANAPOLIS POWER & LIGHT PATRIOT 1 NEW 650 MW (GROSS) 650 MW (ESC) COAL 3.50 %S LIMESTONE VENDOR NOT SELECTED ENERGY CONSUMPTION: ****% STATUS 6 STARTUP 0/93	INDIANAPOLIS POWER AND LIGHT HAS PLANS FOR THREE NEW UNITS, PATRIOT 1, 2, AND 3, TO BE LOCATED IN PATRIOT, INDIANA. THE UTILITY PLANS ON UTILIZING A LIMESTONE FGD PROCESS FOR EMISSION CONTROL AND A LOCAL COAL WITH A SULFUR CONTENT OF 3.5%.

SECTION 2
STATUS OF FGD SYSTEMS

UNIT IDENTIFICATION	ABSTRACT
INDIANAPOLIS POWER & LIGHT PATRIOT 2 NEW 650 MW (GROSS) 650 MW (ESC) COAL 3.50 %S LIMESTONE VENDOR NOT SELECTED ENERGY CONSUMPTION: ****% STATUS 6 STARTUP 0/ 0	INDIANAPOLIS POWER AND LIGHT HAS PLANS FOR THREE NEW UNITS, PATRIOT 1, 2, AND 3, TO BE LOCATED IN PATRIOT, INDIANA. THE UTILITY PLANS TO UTILIZE A LIMESTONE FGD PROCESS FOR EMISSION CONTROL AND A LOCAL COAL WITH A SULFUR CONTENT OF 3.5%.
INDIANAPOLIS POWER & LIGHT PATRIOT 3 NEW 650 MW (GROSS) 650 MW (ESC) COAL 3.50 %S LIMESTONE VENDOR NOT SELECTED ENERGY CONSUMPTION: ****% STATUS 6 STARTUP 0/ 0	INDIANAPOLIS POWER AND LIGHT HAS PLANS FOR THREE NEW UNITS, PATRIOT 1, 2, AND 3, TO BE LOCATED IN PATRIOT, INDIANA. THE UTILITY PLANS ON UTILIZING A LIMESTONE FGD PROCESS FOR EMISSION CONTROL AND A LOCAL COAL WITH A SULFUR CONTENT OF 3.5%.
INDIANAPOLIS POWER & LIGHT PETERSBURG 3 NEW 532 MW (GROSS) 532 MW (ESC) COAL 3.25 %S BITUMINOUS LIMESTONE AIR CORRECTION DIVISION, UOP ENERGY CONSUMPTION: 2.4% STATUS 1 STARTUP 12/77	PETERSBURG 3 OF INDIANAPOLIS POWER AND LIGHT IS LOCATED IN PETERSBURG, INDIANA, AND BURNS BITUMINOUS COAL (3.25% S, 10,750 BTU/LB). TWO COLD SIDE ESP'S ARE LOCATED UPSTREAM OF FOUR 85% EFFICIENT UOP LIMESTONE TCA MODULES. A HORIZONTAL MIST ELIMINATOR PRECEDES AN INDIRECT HOT AIR REHEATER THAT BOOSTS THE GAS TEMPERATURE BY 30 DEG F BEFORE IT EXITS THE 616 FOOT RIGIFLAKE 4850 LINED STACK. STABILIZED SLUDGE IS DISPOSED OF IN AN ON-SITE POND, AND THE SYSTEM OPERATES IN A CLOSED WATER LOOP MODE. THE UNIT HAS BEEN OPERATIONAL SINCE DECEMBER 1977.
INDIANAPOLIS POWER & LIGHT PETERSBURG 4 NEW 530 MW (GROSS) 530 MW (ESC) COAL 3.50 %S BITUMINOUS LIMESTONE RESEARCH-COTTRELL ENERGY CONSUMPTION: 2.1% STATUS 2 STARTUP 3/86	PETERSBURG 4 OF INDIANAPOLIS POWER AND LIGHT IS A BITUMINOUS COAL (3.50% S 11,000 BTU/LB) FIRED UNIT UNDER CONSTRUCTION IN PETERSBURG, INDIANA. THE BOILER WILL BE SUPPLIED BY COMBUSTION ENGINEERING AND THE LIMESTONE FGD SYSTEM FOR THIS UNIT WILL BE SUPPLIED BY RESEARCH-COTTRELL AND AN ESP WILL BE EMPLOYED FOR PARTICULATE CONTROL. THE SYSTEM WILL OPERATE IN A CLOSED_ WATER LOOP AND SLUDGE WILL BE POZ-O-TEC STABILIZED BEFORE PONDING. START-UP IS SLATED FOR MARCH 1986.
IOWA ELECTRIC LIGHT & PWR GUTHRIE CO. 1 NEW 720 MW (GROSS) 720 MW (ESC) COAL .40 %S SUBBITUMINOUS LIMESTONE COMBUSTION ENGINEERING ENERGY CONSUMPTION: ****% STATUS 4 STARTUP 99/99	IOWA ELECTRIC LIGHT AND POWER HAS PLANS TO CONSTRUCT A 720 MW UNIT, GUTHRIE COUNTY 1, SUPPLIED BY COMBUSTION ENGINEERING IS TO BE LOCATED IN PANORA, IOWA. A LETTER OF INTENT WAS SIGNED WITH COMBUSTION ENGINEERING TO PROVIDE A WET LIMESTONE FGD SYSTEM TO CONTROL SO2 EMISSIONS FROM THE PULVERIZED COAL (0.4% S, 8180 BTU/LB) FIRED BOILER. AN ESP IS TO BE USED_ FOR PARTICULATE MATTER REMOVAL. THE SYSTEM WILL OPERATE IN A CLOSED WATER LOOP MODE AND FLUE GAS WILL EXIT A 650 FOOT STACK. START UP HAS BEEN DEFERRED INDEFINITELY.
JACKSONVILLE ELEC AUTHORITY ST.JOHNS RVR PWR PRK 1 NEW 612 MW (GROSS) 612 MW (ESC) COAL 2.50 %S BITUMINOUS LIMESTONE RESEARCH-COTTRELL ENERGY CONSUMPTION: ****% STATUS 2 STARTUP 4/87	THE JACKSONVILLE ELECTRIC AUTHORITY HAS STARTED CONSTRUCTION ON TWO NEW UNITS, ST. JOHNS RIVER POWER PARK 1 AND 2, LOCATED IN EAST PORT, FLORIDA. EACH UNIT WILL BURN PULVERIZED COAL (2-4% S) AND SUPPLY 2,500,000 ACFM TO A WET LIMESTONE FGD PROCESS AND AN ESP FOR EMISSION CONTROL. THE CLEANED FLUE GAS WILL EXIT THROUGH A 640 FOOT DOUBLE LINED SINGLE STACK. THE UTILITY HAS AWARDED A CONTRACT TO RESEARCH-COTTRELL FOR INSTALLATION OF THE CONTROL SYSTEMS. START-UP IS SCHEDULED FOR APRIL 1987.

SECTION 2
STATUS OF FGD SYSTEMS

UNIT IDENTIFICATION	ABSTRACT
JACKSONVILLE ELEC AUTHORITY ST.JOHNS RVR PWR PRK 2 NEW 612 MW (GROSS) 612 MW (ESC) COAL 2.50 %S BITUMINOUS LIMESTONE RESEARCH-COTTRELL ENERGY CONSUMPTION: ****% STATUS 2 STARTUP 10/88	THE JACKSONVILLE ELECTRIC AUTHORITY HAS STARTED CONSTRUCTION ON TWO NEW UNITS, ST. JOHNS RIVER POWER PARK 1 AND 2, LOCATED IN EAST PORT, FLORIDA. EACH UNIT WILL BURN PULVERIZED COAL (2-4% S) AND SUPPLY 2,500,000 ACFM TO A WET LIMESTONE FGD PROCESS AND AN ESP FOR EMISSION CONTROL. THE CLEANED FLUE GAS WILL EXIT THROUGH A 640 FOOT DOUBLE LINED SINGLE STACK. THE UTILITY HAS AWARDED A CONTRACT TO RESEARCH-COTTRELL FOR INSTALLATION OF THE CONTROL SYSTEMS. START-UP IS SCHEDULED FOR OCTOBER 1988.
KANSAS CITY POWER & LIGHT LA CYGNE 1 NEW 874 MW (GROSS) 874 MW (ESC) COAL 5.39 %S SUBBITUMINOUS LIMESTONE BABCOCK & WILCOX ENERGY CONSUMPTION: 3.2% STATUS 1 STARTUP 12/72	LA CYGNE 1 IS A WET BOTTOM, CYCLONE-FIRED UNIT LOCATED IN LA CYGNE, KANSAS. THE UNIT BURNS SUBBITUMINOUS COAL (5.39% S, 9400 BTU/LB). THE EMISSION CONTROL SYSTEM CONSISTS OF EIGHT VARIABLE THROAT VENTURI/LIMESTONE SIEVE TRAY TOWER TRAINS SUPPLIED BY BABCOCK AND WILCOX. EACH 80% (SO2 REMOVAL, DESIGN) EFFICIENT TRAIN IS FOLLOWED BY A COMBINATION SIEVE TRAY AND CHEVRON MIST ELIMINATOR, AND BOTH A DIRECT AND INDIRECT REHEATER. THE CLEANED GAS EXITS THROUGH A 700 FOOT STEEL LINED STACK. THE SYSTEM OPERATES IN AN OPEN WATER LOOP, AND THE SLUDGE IS DISPOSED IN AN UNLINED POND. OPERATIONS COMMENCED IN DECEMBER 1972.
KANSAS POWER & LIGHT JEFFREY 1 NEW 720 MW (GROSS) 540 MW (ESC) COAL .32 %S SUBBITUMINOUS LIMESTONE COMBUSTION ENGINEERING ENERGY CONSUMPTION: ****% STATUS 1 STARTUP 8/78	KANSAS POWER & LIGHT'S JEFFREY 1 IS A TANGENTIAL FIRED PULVERIZED COAL (0.32% S, 8125 BTU/LB) UNIT IN WAMEGO, KANSAS. THE EMISSION CONTROL SYSTEM FOR THIS UNIT CONSISTS OF A COLD SIDE ESP FOLLOWED BY SIX (ONE SPARE) LIMESTONE SPRAY TOWER MODULES SUPPLIED BY COMBUSTION ENGINEERING. THE DESIGN SO2 REMOVAL EFFICIENCY IS 50% (INCLUDING A 30% BYPASS REHEAT). THE SYSTEM OPERATES IN A CLOSED WATER LOOP MODE AND FLUE GAS EXITS A 600 FOOT STACK. THE UNIT HAS BEEN OPERATIONAL SINCE AUGUST 1978.
KANSAS POWER & LIGHT JEFFREY 2 NEW 720 MW (GROSS) 540 MW (ESC) COAL .32 %S SUBBITUMINOUS LIMESTONE COMBUSTION ENGINEERING ENERGY CONSUMPTION: ****% STATUS 1 STARTUP 1/80	UNIT 2, PRESENTLY OPERATING AT KANSAS POWER AND LIGHT'S JEFFREY ENERGY CENTER IN WAMEGO, KANSAS, BURNS 0.32% S PULVERIZED COAL (8125 BTU/LB). THIS UNIT'S EMISSION CONTROL SYSTEM CONSISTS OF A COLD SIDE ESP AND COMBUSTION ENGINEERING LIMESTONE SPRAY TOWERS. A 30% FLUE GAS BYPASS PROVIDES REHEAT OF THE CLEANED GAS BEFORE IT EXITS THROUGH A 600 FOOT STACK. THE SYSTEM OPERATES IN A CLOSED WATER LOOP MODE, AND THE SLUDGE IS STABILIZED WITH BOTTOM ASH AND PIPED TO AN ON-SITE CLAY LINED POND. INITIAL OPERATIONS COMMENCED IN JANUARY 1980.
KANSAS POWER & LIGHT JEFFREY 3 NEW 730 MW (GROSS) 540 MW (ESC) COAL .32 %S SUBBITUMINOUS LIMESTONE COMBUSTION ENGINEERING ENERGY CONSUMPTION: ****% STATUS 1 STARTUP 5/83	JEFFREY 3 OF KANSAS POWER & LIGHT IS A TANGENTIAL FIRED PULVERIZED COAL (.32% S, 8125 BTU/LB) UNIT LOCATED IN WAMEGO, KANSAS. EMISSIONS ARE CONTROLLED VIA A COLD SIDE ESP AND FOUR COMBUSTION ENGINEERING LIMESTONE SPRAY TOWERS. THE ABSORBERS OUTLET INTO A COMMON BYPASS DUCT (FOR CONTINUOUS REHEAT) THAT FEEDS THE 600 FOOT STACK. THE SYSTEM OPERATES IN A CLOSED WATER LOOP MODE AND SLUDGE IS STABILIZED WITH BOTTOM ASH BEFORE BEING PIPED TO AN ON-SITE CLAY LINED POND. INITIAL OPERATIONS COMMENCED IN MAY 1983.
KANSAS POWER & LIGHT LAWRENCE 4 RETROFIT 125 MW (GROSS) 125 MW (ESC) COAL .55 %S LIMESTONE COMBUSTION ENGINEERING ENERGY CONSUMPTION: ****% STATUS 1 STARTUP 1/77	LAWRENCE 4 OF KANSAS POWER AND LIGHT IS A BALANCED DRAFT, TANGENTIAL FIRED PULVERIZED COAL (0.55% S, 10,000 BTU/LB) UNIT LOCATED IN LAWRENCE, KANSAS. A NEW COMBUSTION ENGINEERING LIMESTONE ROD DECK/SPRAY TOWER SYSTEM REPLACED THE EXISTING MARBLE BED TAIL END SCRUBBER IN JANUARY 1977. THE SYSTEM TREATS 403,000 ACFM OF FLUE GAS, WITH A DESIGN SO2 REMOVAL OF 73%. MIST ELIMINATION IS ACCOMPLISHED BY TWO CHEVRONS AND ONE BULK ENTRAINMENT SEPARATOR FOLLOWING EACH OF THE TWO MODULES. A FINNED TUBE REHEATER BOOSTS THE TEMPERATURE OF THE CLEANED GAS BY 20 DEG F BEFORE IT IS EXHAUSTED THROUGH A 200 FOOT STACK. THE SLUDGE IS DISPOSED IN AN UNLINED INTERIM POND, WHICH OVERFLOWS INTO A FINAL DISPOSAL POND. THE SYSTEM OPERATES IN A CLOSED WATER LOOP.

SECTION 2
STATUS OF FGD SYSTEMS

UNIT IDENTIFICATION	ABSTRACT
KANSAS POWER & LIGHT LAWRENCE 5 RETROFIT 420 MW (GROSS) 420 MW (ESC) COAL .55 %S SUBBITUMINOUS LIMESTONE COMBUSTION ENGINEERING ENERGY CONSUMPTION: ****% STATUS 1 STARTUP 4/78	LAWRENCE 5 OF KANSAS POWER AND LIGHT IS A BALANCED DRAFT, TANGENTIAL FIRED PULVERIZED COAL (0.55% S, 10,000 BTU/LB) UNIT LOCATED IN LAWRENCE, KANSAS. A NEW COMBUSTION ENGINEERING LIMESTONE ROD DECK/SPRAY TOWER SYSTEM REPLACED THE EXISTING MARBLE BED TAIL END SCRUBBER IN APRIL 1978. THE SYSTEM TREATS 403,000 ACFM OF FLUE GAS, WITH A DESIGN SO2 REMOVAL OF 73%. MIST ELIMINATION IS ACCOMPLISHED BY TWO CHEVRONS AND ONE BULK ENTRAINMENT SEPARATOR FOLLOWING EACH OF THE TWO MODULES. A FINNED TUBE REHEATER BOOSTS THE TEMPERATURE OF THE CLEANED GAS BY 20 DEG F BEFORE IT IS EXHAUSTED THROUGH A 350 FOOT STACK. THE SLUDGE IS DISPOSED OF IN AN UNLINED INTERIM POND, WHICH OVERFLOWS INTO A FINAL DISPOSAL POND. THE SYSTEM OPERATES IN A CLOSED WATER LOOP.
KENTUCKY UTILITIES GREEN RIVER 1-3 RETROFIT 65 MW (GROSS) 65 MW (ESC) COAL 2.23 %S BITUMINOUS LIME AMERICAN AIR FILTER ENERGY CONSUMPTION: 4.6% STATUS 1 STARTUP 9/75	GREEN RIVER 1-3 OF KENTUCKY UTILITIES ARE THREE DRY BOTTOM PULVERIZED BITUMINOUS COAL (2.23% S, 11,250 BTU/LB) FIRED UNITS LOCATED IN CENTRAL CITY, KENTUCKY. THE BOILER SUPPLIES A TOTAL OF 360,000 ACFM OF FLUE GAS TO A VARIABLE THROAT VENTURI FOLLOWED BY AN AMERICAN AIR FILTER LIME MOBILE BED CONTACTOR (80% DESIGN SO2 REMOVAL EFFICIENCY). A RADIAL VANE MIST ELIMINATOR IS FOLLOWED BY A STEAM TUBE REHEATER AND A 165 FOOT STACK. SLUDGE IS DISPOSED IN AN ON-SITE UNLINED POND, AND THE SYSTEM OPERATES IN A CLOSED WATER LOOP. THIS RETROFIT SYSTEM HAS BEN OPERATIONAL SINCE SEPTEMBER 1975.
KENTUCKY UTILITIES HANCOCK 1 NEW 708 MW (GROSS) 650 MW (ESC) COAL 3.50 %S BITUMINOUS LIMESTONE BABCOCK & WILCOX ENERGY CONSUMPTION: ****% STATUS 3 STARTUP 10/93	KENTUCKY UTILITIES HAS PLANS TO CONSTRUCT TWO NEW 650 MW (NET) PULVERIZED BITUMINOUS COAL (3.5% S, 10,500 BTU/LB) FIRED BOILERS, SUPPLIED BY COMBUSTION ENGINEERING. THE UNITS, HANCOCK 1 AND 2, ARE TO BE LOCATED IN HAWESVILLE, KENTUCKY. THE UTILITY HAS AWARDED A CONTRACT TO B & W FOR A WET LIMESTONE SCRUBBING SYSTEM WHICH WILL OPERATE IN A CLOSED WATER LOOP MODE TO CONTROL EMISSIONS AT A DESIGN REMOVAL EFFICIENCY OF 91.8%. AN ESP WILL BE EMPLOYED FOR PARTICULATE CONTROL AND FLUE GAS WILL BE REHEATED BY ZZZZ PLOYED FOR SLUDGE TREATMENT. HANCOCK 1 IS SCHEDULED TO COMMENCE IN OCTOBER 1993.
KENTUCKY UTILITIES HANCOCK 2 NEW 708 MW (GROSS) 650 MW (ESC) COAL 3.50 %S BITUMINOUS LIMESTONE VENDOR NOT SELECTED ENERGY CONSUMPTION: ****% STATUS 6 STARTUP 99/99	KENTUCKY UTILITIES HAS PLANS TO CONSTRUCT TWO NEW 650 MW (NET) PULVERIZED BITUMINOUS COAL (3.5% S, 10,500 BTU/LB) FIRED BOILERS, SUPPLIED BY COMBUSTION ENGINEERING. THE UNITS, HANCOCK 1 AND 2, ARE TO BE LOCATED IN HAWESVILLE, KENTUCKY. THE UTILITY IS PRESNTLY INVESTIGATING A WET LIME-STONE SCRUBBING SYSTEM WHICH WILL OPERATE IN A CLOSED WATER LOOP MODE TO CONTROL EMISSIONS AT A DESIGN REMOVAL EFFICIENCY OF 91.8%. AN ESP WILL BE EMPLOYED FOR PARTICULATE CONTROL AND FLUE GAS WILL BE REHEATED BY INDIRECT HOT AIR BEFORE EXITING A 600 FT STACK. FORCED OXIDATION IS EMPLOYED FOR SLUDGE TREATMENT. HANCOCK 2 HAS BEEN DEFERRED INDEFINITELY.
LAKELAND UTILITIES MCINTOSH 3 NEW 364 MW (GROSS) 364 MW (ESC) COAL 2.56 %S BITUMINOUS LIMESTONE BABCOCK & WILCOX ENERGY CONSUMPTION: ****% STATUS 1 STARTUP 7/82	MCINTOSH 3 OF LAKELAND UTILITIES IS A PULVERIZED BITUMINOUS COAL FIRED BOILER LOCATED IN LAKELAND, FLORIDA. BABCOCK AND WILCOX WAS AWARDED A CONTRACT TO SUPPLY AN 85% EFFICIENT (SO2) LIMESTONE FGD SYSTEM FOR THIS UNIT. THE EMISSION CONTROL SYSTEM CONSISTS OF A COLD SIDE ESP FOLLOWED BY TWO PARALLEL FGD MODULES AND A 250 FOOT ACID BRICK LINED STACK. THE SYSTEM OPERATES IN A CLOSED WATER LOOP WITH POZ-O-TEC BEING USED TO STAB-ILIZE THE SLUDGE.
LOS ANGELES DEPT OF WTR & PWR INTERMOUNTAIN 1 NEW 820 MW (GROSS) 820 MW (ESC) COAL .79 %S SUBBITUMINOUS LIMESTONE GE ENVIRONMENTAL SERVICES ENERGY CONSUMPTION: .0% STATUS 2 STARTUP 7/86	THE LOS ANGELES DEPARTMENT OF WATER AND POWER HAS STARTED CONSTRUCTION ON TWO NEW BOILERS, INTERMOUNTAIN 1 AND 2 TO BE LOCATED IN DELTA, UTAH. EACH 820 MW BOILER WILL FIRE PULVERIZED SUBBITUMINOUS COAL (0.79% S, 10,200 BTU/LB) AND WIIL SUPPLY 5,400,000 ACFM OF FLUE GAS TO A GEESI WET LIMESTONE SCRUBBING SYSTEM. HOT SIDE ESP'S WILL BE USED FOR PARTICLUATE CONTROL. THE FLUE GAS WILL PASS THROUGH A CHEVRON-TYPE MIST ELIMINATOR DESIGNED FOR 90% SO2 REMOVAL EFFICIENCY AND WILL BE REHEATED BY IN-LINE HEAT EXCHANGERS BEFORE EXITING A 710 FT STACK. THE SYSTEM WILL OPERATE IN A CLOSED WATER LOOP MODE AND THE SLUDGE WILL BE FLYASH STABILIZED BEFORE BEING DISPOSED ON-SITE. UNIT 1 IS SCHEDULED TO COMMENCE OPERATIONS IN JULY 1986.

SECTION 2
STATUS OF FGD SYSTEMS

UNIT IDENTIFICATION	ABSTRACT
LOS ANGELES DEPT OF WTR & PWR INTERMOUNTAIN 2 NEW 820 MW (GROSS) 820 MW (ESC) COAL .79 %S SUBBITUMINOUS LIMESTONE GE ENVIRONMENTAL SERVICES ENERGY CONSUMPTION: .0% STATUS 2 STARTUP 7/87	THE LOS ANGELES DEPARTMENT OF WATER AND POWER HAS STARTED CONSTRUCTION ON TWO NEW BOILERS, INTERMOUNTAIN 1 AND 2 TO BE LOCATED IN DELTA, UTAH. EACH 820 MW BOILER WILL FIRE PULVERIZED SUBBITUMINOUS COAL (0.79% S, 10,200 BTU/LB) AND WIIL SUPPLY 5,400,000 ACFM OF FLUE GAS TO A GEESI WET LIMESTONE SCRUBBING SYSTEM. HOT SIDE ESP'S WILL BE USED FOR PARTICLUATE CONTROL. THE FLUE GAS WILL PASS THROUGH A CHEVRON-TYPE MIST ELIMINATOR DESIGNED FOR 90% SO2 REMOVAL EFFICIENCY AND WILL BE REHEATED BY IN-LINE HEAT EXCHANGERS BEFORE EXITING A 710 FT STACK. THE SYSTEM WILL OPERATE IN A CLOSED WATER LOOP MODE AND THE SLUDGE WILL BE FLYASH STABILIZED BEFORE BEING DISPOSED ON-SITE. UNIT 1 IS SCHEDULED TO COMMENCE OPERATIONS IN JULY 1987.
LOUISVILLE GAS & ELECTRIC CANE RUN 4 RETROFIT 188 MW (GROSS) 188 MW (ESC) COAL 3.87 %S BITUMINOUS LIME AMERICAN AIR FILTER ENERGY CONSUMPTION: 1.6% STATUS 1 STARTUP 8/76	UNIT 4 AT LOUISVILLE GAS AND ELECTRIC'S CANE RUN STATION IS A PULVERIZED BITUMINOUS COAL (3.87% S, 11,300 BTU/LB) FIRED UNIT IN LOUISVILLE, KENTUCKY. AN ESP AND TWO AMERICAN AIR FILTER CARBIDE LIME MOBILE BED ABSORBER MODULES (85% DESIGN SO2 REMOVAL) TREAT 734,000 ACFM OF FLUE GAS FROM THE BOILER. TWO CHEVRON MIST ELIMINATORS/MODULE ARE FOLLOWED BY A DIRECT COMBUSTION REHEATER AND A 250 FOOT STACK. THE WATER LOOP IS OPEN, AND THE POZ-O-TEC FIXATED SLUDGE IS DISPOSED IN AN ON-SITE LANDFILL. THIS RETROFIT SYSTEM HAS BEEN OPERATIONAL SINCE AUGUST 1976.
LOUISVILLE GAS & ELECTRIC CANE RUN 5 RETROFIT 200 MW (GROSS) 200 MW (ESC) COAL 3.80 %S BITUMINOUS LIME COMBUSTION ENGINEERING ENERGY CONSUMPTION: 1.5% STATUS 1 STARTUP 12/77	CANE RUN 5 OF LOUISVILLE GAS AND ELECTRIC IS A PULVERIZED BITUMINOUS COAL (3.8% S, 11,0000 BTU/LB) FIRED UNIT LOCATED IN LOUISVILLE, KENTUCKY. THE BOILER SUPPLIES 700,000 ACFM OF FLUE GAS TO AN EMISSION CONTROL SYSTEM CONSISTING OF AN ESP FOLLOWED BY TWO COMBUSTION ENGINEERING 85% EFFICIENT (DESIGN) CARBIDE LIME SPRAY TOWERS. A STEAM TUBE REHEATER RAISES THE GAS TEMPERATURE 40 DEG F. THE SYSTEM OPERATES IN AN OPEN WATER LOOP MODE, AND THE SLUDGE IS POZ-O-TEC STABILIZED. THE CLEANED FLUE GAS EXITS A 250 FT STACK. OPERATION OF THIS RETROFIT SYSTEM BEGAN IN DECEMBER 1977.
LOUISVILLE GAS & ELECTRIC CANE RUN 6 RETROFIT 299 MW (GROSS) 299 MW (ESC) COAL 4.80 %S BITUMINOUS DUAL ALKALI THYSSEN/CEA ENERGY CONSUMPTION: 1.0% STATUS 1 STARTUP 4/79	LOUISVILLE GAS AND ELECTRIC'S CANE RUN 6 IS A 299-MW (GROSS) BITUMINOUS COAL (4.80% S, 11,000 BTU/LB) FIRED UNIT LOCATED IN LOUISVILLE, KENTUCKY. THYSSEN/CEA SUPPLIED A RETROFIT DUAL ALKALI DEMONSTRATION FGD SYSTEM FOR THIS UNIT. THE EMISSION CONTROL SYSTEM, DESIGNED TO REMOVE 95% OF THE FLUE GAS SO2, CONSISTS OF A COLD SIDE ESP AND TWO TRAY TOWER MODULES. THE CLEANED GAS PASSES THROUGH A CHEVRON MIST ELIMINATOR AND TWO DIRECT COMBUSTION REHEATERS BEFORE EXITING A 518 FOOT STACK. THE WATER LOOP IS CLOSED, AND THE SLUDGE IS DISPOSED IN AN ON-SITE LANDFILL.
LOUISVILLE GAS & ELECTRIC MILL CREEK 1 RETROFIT 358 MW (GROSS) 358 MW (ESC) COAL 3.75 %S BITUMINOUS LIME COMBUSTION ENGINEERING ENERGY CONSUMPTION: 1.4% STATUS 1 STARTUP 12/80	MILL CREEK 1 OF LOUISVILLE GAS AND ELECTRIC IS LOCATED IN LOUISVILLE, KENTUCKY. A RETROFIT LIME FGD SYSTEM IS PRESENTLY OPERATING ON THIS PULVERIZED COAL (3.75% S, 11,500 BTU/LB) FIRED UNIT SUPPLIED BY COMBUSTION ENGINEERING. AN ESP IS EMPLOYED FOR PARTICULATE CONTROL AND THE CLEANED FLUE GAS EXITS A 600 FT STACK. THE SYSTEM CAN OPERATE IN AN OPEN OR CLOSED WATER LOOP MODE. OPERATIONS BEGAN IN DECEMBER 1980.
LOUISVILLE GAS & ELECTRIC MILL CREEK 2 RETROFIT 350 MW (GROSS) 350 MW (ESC) COAL 3.75 %S BITUMINOUS LIME COMBUSTION ENGINEERING ENERGY CONSUMPTION: 1.4% STATUS 1 STARTUP 12/81	MILL CREEK 2 OF LOUISVILLE GAS AND ELECTRIC IS LOCATED IN LOUISVILLE, KENTUCKY. A RETROFIT LIME FGD SYSTEM IS PRESENTLY OPERATING ON THIS PULVERIZED COAL (3.75% S, 11,500 BTU/LB) FIRED UNIT SUPPLIED BY COMBUSTION ENGINEERING. AN ESP IS EMPLOYED FOR PARTICULATE CONTROL AND THE CLEANED FLUE GAS EXITS A 600 FT STACK. THE SYSTEM OPERATES IN A CLOSED WATER LOOP MODE. INITIAL START-UP TOOK PLACE IN DECEMBER 1981.

SECTION 2
STATUS OF FGD SYSTEMS

UNIT IDENTIFICATION	ABSTRACT
LOUISVILLE GAS & ELECTRIC MILL CREEK 3 NEW 427 MW (GROSS) 427 MW (ESC) COAL 3.87 %S BITUMINOUS LIME AMERICAN AIR FILTER ENERGY CONSUMPTION: ****% STATUS 1 STARTUP 8/78	LOUISVILLE GAS AND ELECTRIC'S MILL CREEK 3 IS A 3.87% S COAL (11,300 BTU/LB) FIRED UNIT LOCATED IN LOUISVILLE, KENTUCKY. AMERICAN AIR FILTER SUPPLIED A CARBIDE LIME FGD SYSTEM FOR THIS UNIT WHICH WAS DESIGNED TO REMOVE 85% OF THE SO2 FROM THE FLUE GAS. AN ESP IS FOLLOWED BY FOUR MOBILE BED CONTACTORS AND A STEAM TUBE REHEATER. CLEANED FLUE GAS EXITS A 600 FT STACK. THE WATER LOOP IS OPEN AND THE LIME/FLYASH STABILIZED SLUDGE IS PONDED. THIS UNIT HAS BEEN OPERATIONAL SINCE AUGUST 1978.
LOUISVILLE GAS & ELECTRIC MILL CREEK 4 NEW 495 MW (GROSS) 495 MW (ESC) COAL 3.75 %S BITUMINOUS LIME AMERICAN AIR FILTER ENERGY CONSUMPTION: ****% STATUS 1 STARTUP 7/82	MILL CREEK 4 OF LOUISVILLE GAS AND ELECTRIC IS A PULVERIZED BITUMINOUS COAL (3.75% S, 11,500 BTU/LB) FIRED UNIT LOCATED IN LOUISVILLE, KENTUCKY. THE EMISSION CONTROL SYSTEM CONSISTS OF AN ESP AND FOUR MOBILE BED CONTACTORS. THE LIME FGD SYSTEM FOR THIS UNIT WAS SUPPLIED BY AMERICAN AIR FILTER. THE SYSTEM'S WATER LOOP IS CLOSED AND THE SLUDGE IS STABILIZED WITH LIME AND FLYASH. STEAM TUBES PROVIDE REHEAT OF THE CLEANED GASES WHICH EXIT A 600 FT STACK. INITIAL START-UP WAS IN JULY 1982.
LOUISVILLE GAS & ELECTRIC PADDY'S RUN 6 RETROFIT 72 MW (GROSS) 72 MW (ESC) COAL 3.70 %S BITUMINOUS LIME COMBUSTION ENGINEERING ENERGY CONSUMPTION: 2.8% STATUS 1 STARTUP 4/73	UNIT 6 AT LOUISVILLE GAS AND ELECTRIC'S PADDY'S RUN STATION IS A DRY BOTTOM PULVERIZED COAL (3.8% S, 11,300 BTU/LB) FIRED UNIT IN LOUISVILLE, KENTUCKY. A RETROFIT CARBIDE LIME FGD SYSTEM BY COMBUSTION ENGINEERING TREATS 400,000 ACFM OF FLUE GAS FROM THE BOILER. AN ESP IS FOLLOWED BY TWO MARBLE BED ABSORBERS, A DIRECT COMBUSTION REHEATER, AND A 250 FOOT STACK. MIST ELIMINATION IS PROVIDED BY ONE CHEVRON/MODULE. THE LIME FIXATED SLUDGE IS TRUCKED TO AN UNLINED POND, AND THE WATER LOOP IS CLOSED. THE FGD SYSTEM BEGAN INITIAL OPERATIONS IN APRIL 1973.
LOUISVILLE GAS & ELECTRIC TRIMBLE COUNTY 1 NEW 575 MW (GROSS) 575 MW (ESC) COAL 4.00 %S BITUMINOUS PROCESS NOT SELECTED VENDOR NOT SELECTED ENERGY CONSUMPTION: ****% STATUS 5 STARTUP 7/87	LOUISVILLE GAS AND ELECTRIC WILL BE INSTALLING FGD SYSTEMS ON TWO OF THE FOUR BOILERS AT THE UTILITY'S PLANNED TRIMBLE COUNTY STATION IN BEDFORD, KENTUCKY. THE PULVERIZED 4% S (IF NO COAL WASH IS INCLUDED) COAL FIRED UNITS' FLUE GAS WILL BE CLEANED BY ESP'S AND WET SCRUBBING (90% REMOVAL EFFICIENCY). SLUDGE DISPOSAL STRATEGY IS UNDECIDED. UNIT 1 IS SCHEDULED FOR START-UP IN JULY 1987.
LOUISVILLE GAS & ELECTRIC TRIMBLE COUNTY 2 NEW 575 MW (GROSS) 575 MW (ESC) COAL 4.00 %S BITUMINOUS PROCESS NOT SELECTED VENDOR NOT SELECTED ENERGY CONSUMPTION: ****% STATUS 5 STARTUP 7/90	LOUISVILLE GAS AND ELECTRIC WILL BE INSTALLING FGD SYSTEMS ON TWO OF THE FOUR BOILERS AT THE UTILITY'S PLANNED TRIMBLE COUNTY STATION IN BEDFORD, KENTUCKY. THE PULVERIZED 4% S (IF NO COAL WASH IS INCLUDED) COAL FIRED UNITS' FLUE GAS WILL BE CLEANED BY ESP'S AND WET SCRUBBING (90% REMOVAL EFFICIENCY). SLUDGE DISPOSAL STRATEGY IS UNDECIDED. UNIT 2 IS SCHEDULED FOR START-UP IN 1990.
LOWER COLORADO RIVER AUTH FAYETTE POWER PROJECT 3 NEW 451 MW (GROSS) 451 MW (ESC) LIGNITE 1.70 %S LIMESTONE COMBUSTION ENGINEERING ENERGY CONSUMPTION: -.7% STATUS 2 STARTUP 11/87	LOWER COLORADO RIVER AUTHORITY HAS STARTED CONSTRUCTION ON A 451 MW UNIT, FAYETTE POWER PROJECT 3, IN LA GRANGE, TEXAS. THE LIGNITE (1.7% S, 4300 BTU/LB) FIRED BOILER WILL UTILIZE A WET LIMESTONE SCRUBBING SYSTEM DESIGNED TO REMOVE 90% SO2. AN ESP SUPPLIED BY FLAKT WILL CONTROL PARTICLE EMISSIONS AND THE CLEANED FLUE GAS WILL EXIT THROUGH A 535 FOOT ACID BRICK LINED STACK. SLUDGE WILL BE FORCIBLY OXIDIZED BEFORE BEING DISPOSED IN AN ON-SITE LANDFILL. OPERATIONS ARE SCHEDULED TO COMMENCE IN 1988.

SECTION 2
STATUS OF FGD SYSTEMS

UNIT IDENTIFICATION	ABSTRACT
LOWER COLORADO RIVER AUTH FAYETTE POWER PROJECT 4 NEW 451 MW (GROSS) 451 MW (ESC) LIGNITE 1.70 %S LIMESTONE VENDOR NOT SELECTED ENERGY CONSUMPTION: ****% STATUS 6 STARTUP 6/90	LOWER COLORADO RIVER AUTHORITY HAS PLANS FOR A 451 MW UNIT, FAYETTE POWER PROJECT 4, TO BE LOCATED IN LA GRANGE TEXAS. THE LIGNITE (1.7% S, 4300 BTU/LB) FIRED BOILER WILL UTILIZE A WET LIMESTONE SCRUBBING SYSTEM DESIGNED TO REMOVE 90% SO2. AN EDP WILL CONTROL PARTICLE EMISSIONS AND THE CLEANED FLUE GAS WILL EXIT THROUGH A 535 FOOT ACID BRICK LINED STACK. SLUDGE WILL BE FORCE OXIDIZED BEFORE BEING DISPOSED IN AN ON-SITE LANDFILL. INITIAL START-UP IS SCHEDULED FOR JUNE 1990.
MARQUETTE BOARD OF LIGHT & PWR SHIRAS 3 NEW 44 MW (GROSS) 44 MW (ESC) COAL .30 %S SUBBITUMINOUS LIME/SPRAY DRYING GE ENVIRONMENTAL SERVICES ENERGY CONSUMPTION: ****% STATUS 1 STARTUP 3/83	SHIRAS 3 OF THE MARQUETTE BOARD OF LIGHT AND POWER IS A PULVERIZED SUBBITUMINOUS COAL (.3% S, 8654 BTU/LB) FIRED BOILER LOCATED IN MARQUETTE, MICHIGAN. GE ENVIRONMENTAL SERVICES HAS SUPPLIED A LIME/SPRAY DRYING PROCESS TO CONTROL EMISSIONS. FABRIC FILTERS WITH 99.8% REMOVAL EFFICIENCY CONTROL PARTICULATE MATTER AND THE CLEANED FLUE GAS EXITS A 350 FT STACK. THE FGD WASTE IS DISPOSED AT AN OFF-SITE LANDFILL. OPERATIONS COMMENCED IN MARCH 1983.
MICHIGAN SO CENTRAL PWR AGENCY PROJECT 1 NEW 55 MW (GROSS) 55 MW (ESC) COAL 2.25 %S BITUMINOUS LIMESTONE BABCOCK & WILCOX ENERGY CONSUMPTION: 1.8% STATUS 1 STARTUP 5/83	THE PROJECT 1 UNIT OF MICHIGAN SOUTH CENTRAL POWER AGENCY IS A PULVERIZED COAL FIRED BOILER LOCATED IN LICHTFIELD, MICHIGAN. THE EMISSION CONTROL SYSTEM CONSISTS OF A HOT SIDE ESP AND A BABCOCK & WILCOX LIMESTONE SPRAY TOWER. THE SPRAY TOWER MIST ELIMINATOR IS FOLLOWED BY AN IN-LINE REHEATER AND A 250 FOOT STACK. THE SYSTEM OPERATES IN A CLOSED WATER LOOP AND SLUDGE IS DISPOSED AT AN OFF-SITE LANDFILL. OPERATIONS COMMENCED IN MAY 1983.
MIDDLE SOUTH UTILITIES WILTON 1 NEW 890 MW (GROSS) 890 MW (ESC) COAL .50 %S LIMESTONE COMBUSTION ENGINEERING ENERGY CONSUMPTION: ****% STATUS 4 STARTUP 99/99	WILTON 1 IS A COAL (.50% S) FIRED BOILER TO BE LOCATED IN CONVENT, LOUISIANA. MIDDLE SOUTH UTILITIES HAS SIGNED A LETTER OF INTENT WITH COMBUSTION ENGINEERING FOR A WET LIMESTONE SCRUBBING SYSTEM FOR EMISSION CONTROL. START-UP HAS BEEN DEFERRED INDEFINITELY.
MIDDLE SOUTH UTILITIES WILTON 2 NEW 890 MW (GROSS) 890 MW (ESC) COAL .50 %S LIMESTONE COMBUSTION ENGINEERING ENERGY CONSUMPTION: ****% STATUS 4 STARTUP 99/99	WILTON 2 IS A COAL (.50% S) FIRED BOILER TO BE LOCATED IN CONVENT, LOUISIANA. MIDDLE SOUTH UTILITIES HAS SIGNED A LETTER OF INTENT WITH COMBUSTION ENGINEERING FOR A WET LIMESTONE SCRUBBING SYSTEM FOR EMISSION CONTROL. START-UP HAS BEEN DEFERRED INDEFINITELY.
MINNESOTA POWER & LIGHT CLAY BOSWELL 4 NEW 554 MW (GROSS) 475 MW (ESC) COAL .94 %S SUBBITUMINOUS LIME/ALKALINE FLYASH PEABODY PROCESS SYSTEMS ENERGY CONSUMPTION: 1.3% STATUS 1 STARTUP 2/80	CLAY BOSWELL 4 OF MINNESOTA POWER AND LIGHT IS A SUBBITUMINOUS COAL (0.94% S, 8287 BTU/LB) FIRED UNIT LOCATED IN COHASSET, MINNESOTA. PEABODY PROCESS SYSTEMS HAS SUPPLIED A LIME/ALKALINE FLYASH SYSTEM WHICH IS DESIGNED TO REMOVE 84.6% OF THE SO2 IN THE FLUE GAS. PARTICULATE MATTER AND ADDITIONAL SO2 CONTROL IS ACHIEVED WITH VENTURI SCRUBBERS (ONE HOT SIDE ESP CONTROLS PARTICULATE MATTER IN THE BYPASS FLUE GAS STREAM). MIST ELIMINATION IS PROVIDED BY A SIEVE TRAY FOLLOWED BY A SPIN VANE CHEVRON, AND REHEAT IS SUPPLIED BY BYPASSING 5% OF THE FLUE GAS. THE SYSTEM OPERATES IN A CLOSED WATER LOOP MODE, SLUDGE IS DISPOSED IN A LINED POND AND FLUE GAS EXITS A 600 FT STACK. OPERATIONS COMMENCED IN FEBRUARY 1980.

SECTION 2
STATUS OF FGD SYSTEMS

UNIT IDENTIFICATION	ABSTRACT
MINNKOTA POWER MILTON R. YOUNG 2 NEW 440 MW (GROSS) 374 MW (ESC) COAL .60 %S LIGNITE LIME/ALKALINE FLYASH THYSSEN/CEA ENERGY CONSUMPTION: 1.6% STATUS 1 STARTUP 9/77	MINNKOTA POWER COOPERATIVE'S MILTON R. YOUNG 2 IS A CYCLONE FIRED LIGNITE (0.60%S, 6500 BTU/LB) BOILER LOCATED IN CENTER, NORTH DAKOTA. THE BOILER PRODUCES 2,021,400 ACFM OF FLUE GAS, HALF OF WHICH IS CLEANED BY TWO ESP'S AND TWO THYSSEN/CEA LIME/ALKALINE FYLASH SPRAY TOWERS (75% DESIGN SO2 REMOVAL EFFICIENCY). THE CLEANED GAS PASSES THROUGH A CHEVRON MIST ELIMINATOR BEFORE IT JOINS A 15% BYPASS REHEAT (HOT UNSCRUBBED GAS), AND EXITS A 550 FOOT STACK. THE WATER LOOP IS CLOSED, AND THE SLUDGE IS TRUCKED TO AN OFF-SITE MINEFILL. OPERATIONS BEGAN IN 1977.
MONONGAHELA POWER PLEASANTS 1 NEW 626 MW (GROSS) 626 MW (ESC) COAL 3.00 %S BITUMINOUS LIME BABCOCK & WILCOX ENERGY CONSUMPTION: 2.4% STATUS 1 STARTUP 12/78	MONONGAHELA POWER PLEASANTS 1 IS A BITUMINOUS COAL (3.00% S, 12,500 BTU/LB) FIRED BOILER IN WILLOW ISLAND, WEST VIRGINIA. BABCOCK AND WILCOX SUPPLIED A LIME FGD SYSTEM DESIGNED TO REMOVE 90% OF THE FLUE GAS SO2 FROM THIS UNIT. THE EMISSION CONTROL SYSTEM INCLUDES AN ESP UPSTREAM OF FOUR SPRAY TOWER ABSORBERS. A FLUE GAS BYPASS SYSTEM PROVIDES REHEAT OF THE CLEANED GAS BEFORE IT IS DISCHARGED THROUGH A 1000 FOOT PLACITE LINED STACK. THE SYSTEM OPERATES IN A CLOSED WATER LOOP. THE FGD SYSTEM ON THIS UNIT HAS BEEN OPERATIONAL SINCE DECEMBER 1978.
MONONGAHELA POWER PLEASANTS 2 NEW 626 MW (GROSS) 626 MW (ESC) COAL 3.00 %S BITUMINOUS LIME BABCOCK & WILCOX ENERGY CONSUMPTION: 2.4% STATUS 1 STARTUP 10/80	MONONGAHELA POWER PLEASANTS 2 IS A BITUMINOUS COAL (3.00 %S, 12,500 BTU/LB) FIRED BOILER LOCATED IN WILLOW ISLAND, WEST VIRGINIA. BABCOCK AND WILCOX SUPPLIED A LIME FGD SYSTEM DESIGNED TO REMOVE 90% OF THE BOILER FLUE GAS SO2. THE EMISSION CONTROL SYSTEM ON THIS UNIT INCLUDES AN ESP UPSTREAM OF FOUR SPRAY TOWER ABSORBERS. A FLUE GAS BYPASS SYSTEM PROVIDES REHEAT OF THE CLEANED GAS BEFORE IT IS DISCHARGED THROUGH A 1000 FOOT ACID BRICK STACK. THE SYSTEM OPERATES IN A CLOSED WATER LOOP. THE FGD SYSTEM OPERATION COMMENCED IN OCTOBER 1980.
MONTANA POWER COLSTRIP 1 NEW 360 MW (GROSS) 360 MW (ESC) COAL .78 %S SUBBITUMINOUS LIME/ALKALINE FLYASH THYSSEN/CEA ENERGY CONSUMPTION: 3.3% STATUS 1 STARTUP 9/75	COLSTRIP 1 OF MONTANA POWER IS A 360-MW (GROSS) SUBBITUMINOUS COAL (0.78% S, 8843 BTU/LB) FIRED UNIT LOCATED IN COLSTRIP, MONTANA. THYSSEN/CEA SUPPLIED A LIME/ALKALINE FLYASH FGD SYSTEM CONSISTING OF THREE VENTURI SCRUBBER/SPRAY TOWER ABSORBER MODULES. THE TOWERS ARE FOLLOWED BY HORIZONTAL CHEVRON MIST ELIMINATORS, A STEAM TUBE REHEATER, AND A 503 FOOT STACK. THE UNSTABILIZED SLUDGE IS DISPOSED IN AN ON-SITE LINED POND. THE WATER LOOP IS CLOSED. OPERATIONS INITIALLY BEGAN IN SEPTEMBER 1975.
MONTANA POWER COLSTRIP 2 NEW 360 MW (GROSS) 360 MW (ESC) COAL .78 %S SUBBITUMINOUS LIME/ALKALINE FLYASH THYSSEN/CEA ENERGY CONSUMPTION: 3.3% STATUS 1 STARTUP 5/76	COLSTRIP 2 OF MONTANA POWER IS A 360-MW (GROSS) SUBBITUMINOUS COAL (0.78% S, 8843 BTU/LB) FIRED UNIT LOCATED IN COLSTRIP, MONTANA. THYSSEN/CEA SUPPLIED A LIME/ALKALINE FLYASH FGD SYSTEM CONSISTING OF THREE VENTURI SCRUBBER/SPRAY TOWER ABSORBER TRAINS. THE ABSORBERS ARE FOLLOWED BY HORIZONTAL CHEVRON MIST ELIMINATORS, A STEAM TUBE REHEATER, AND A 503 FOOT STACK. THE UNSTABILIZED SLUDGE IS DISPOSED IN AN ON-SITE LINED POND. THE WATER LOOP IS CLOSED. OPERATIONS INITIALLY BEGAN IN MAY 1976.
MONTANA POWER COLSTRIP 3 NEW 778 MW (GROSS) 778 MW (ESC) COAL .70 %S LIME/ALKALINE FLYASH BECHTEL/MONTANA POWER ENERGY CONSUMPTION: ****% STATUS 1 STARTUP 10/83	MONTANA POWER'S COLSTRIP 3 IS A LOW SULFUR COAL (0.7% S, 8500 BTU/LB) FIRED UNIT LOCATED IN COLSTRIP, MONTANA. A LIME/ALKALINE FLY-ASH FGD SYSTEM SUPPLIED BY BECHTEL/MONTANA POWER CONTROLS SO2 EMISSIONS AT THIS UNIT. PARTICLE SCRUBBERS ARE EMPLOYED FOR THE CONTROL OF PART-TICULATE MATTER AND THE SYSTEM OPERATES IN A CLOSED WATER LOOP MODE. FLUE GAS EXITS A 692 FT STACK. START-UP COMMENCED IN OCTOBER 1983.

SECTION 2
STATUS OF FGD SYSTEMS

UNIT IDENTIFICATION	ABSTRACT
MONTANA POWER COLSTRIP 4 NEW 778 MW (GROSS) 778 MW (ESC) COAL .70 %S LIME/ALKALINE FLYASH BECHTEL/MONTANA POWER ENERGY CONSUMPTION: ****% STATUS 2 STARTUP 10/85	MONTANA POWER'S COLSTRIP 4 IS A LOW SULFUR COAL (0.7% S, 8800 BTU/LB) FIRED UNIT UNDER CONSTRUCTION IN COLSTRIP, MONTANA. A LIME/ALKALINE FLY-ASH FGD SYSTEM IS BEING BUILT BY BECHTEL/MONTANA POWER FOR 95% SO2 REMOVAL EFFICIENCY AT THIS UNIT. PARTICLE SCRUBBERS WILL BE EMPLOYED FOR THE CONTROL OF PARTICULATE MATTER WITH REHEAT FROM IN-LINE STEAM AND THE SYS-TEM WILL OPERATE IN A CLOSED WATER LOOP MODE. SLUDGE WILL BE FORCE OXIDIZED BEFORE BEING DISPOSED IN AN ON-SITE POND. START-UP IS SCHEDULED FOR OCTOBER 1985.
MONTANA-DAKOTA UTILITIES COYOTE 1 NEW 440 MW (GROSS) 440 MW (ESC) COAL .87 %S LIGNITE SODIUM CARBONATE/SPRAY DRYING WHEELABRATOR-FRYE/R.I. ENERGY CONSUMPTION: 1.1% STATUS 1 STARTUP 4/81	COYOTE 1 IS A CYCLONE FIRED PULVERIZED LIGNITE (0.87% S, 7050 BTU/LB) BOILER OPERATING IN BEULAH, NORTH DAKOTA. THIS UNIT IS JOINTLY OWNED BY FIVE UTILITIES, WITH MONTANA-DAKOTA UTILITIES BEING THE MAJOR OWNER AND CONSTRUCTOR. A SODIUM CARBONATE DRY FGD SYSTEM DESIGNED TO REMOVE 70% OF THE SO2 WAS SUPPLIED BY WHEELABRATOR-FRYE AND ROCKWELL INTERNATIONAL. THE SPRAY DRYER/BAGHOUSE SYSTEM COMMENCED OPERATION IN APRIL 1981.
MUSCATINE POWER & WATER MUSCATINE 9 NEW 166 MW (GROSS) 166 MW (ESC) COAL 3.21 %S BITUMINOUS LIMESTONE RESEARCH-COTTRELL ENERGY CONSUMPTION: 4.8% STATUS 1 STARTUP 4/83	MUSCATINE 9 IS A PULVERIZED BITUMINOUS COAL (3.21% S, 11,220 BTU/LB) FIRED UNIT LOCATED IN MUSCATINE, IOWA. RESEARCH-COTTRELL SUPPLIED A LIMESTONE SCRUBBING SYSTEM FOR EMISSION CONTROL. THE FGD SYSTEM FEATURES AN ESP, TWO 100% CAPACITY ABSORBER TOWERS, STEAM COIL REHEAT, A CLOSED WATER LOOP, FORCED OXIDATION OF THE SLUDGE BEFORE LANDFILL AND A 300 FOOT STACK. THE DESIGN SO2 REMOVAL EFFICIENCY IS 94%. OPERATIONS INITIALLY BEGAN IN APRIL 1983.
NEBRASKA PUBLIC POWER DISTRICT FOSSIL III 1 NEW 650 MW (GROSS) 650 MW (ESC) COAL .36 %S SUBBITUMINOUS PROCESS NOT SELECTED VENDOR NOT SELECTED ENERGY CONSUMPTION: ****% STATUS 6 STARTUP 3/96	FOSSIL III 1 IS A PULVERIZED SUBBITUMINOUS COAL (0.36% S, 8000 BTU/LB) FIRED UNIT PLANNED BY THE NEBRASKA PUBLIC POWER DISTRICT TO BE LOCATED NEAR SARGENT, NEBRASKA. THE UTILITY IS CONSIDERING A DRY SCRUBBING FGD PROCESS TO CONTROL EMISSIONS FROM THE 650 MW BOILER. START-UP FOR THE UNIT IS TENTATIVELY SCHEDULED FOR MARCH 1996.
NEVADA POWER HARRY ALLEN 1 NEW 500 MW (GROSS) 500 MW (ESC) COAL ***** %S PROCESS NOT SELECTED VENDOR NOT SELECTED ENERGY CONSUMPTION: ****% STATUS 6 STARTUP 0/94	NEVADA POWER'S HARRY ALLEN 1 IS A PLANNED COAL FIRED UNIT TO BE LOCATED IN LAS VEGAS, NEVADA. THE UTILITY IS CONSIDERING A HOT SIDE ESP IN CONJUNC-TION WITH AN FGD SYSTEM. SPECIFICATIONS HAVE NOT YET BEEN PREPARED. START-UP IS SCHEDULED FOR 1994.
NEVADA POWER HARRY ALLEN 2 NEW 500 MW (GROSS) 500 MW (ESC) COAL ***** %S PROCESS NOT SELECTED VENDOR NOT SELECTED ENERGY CONSUMPTION: ****% STATUS 6 STARTUP 0/95	NEVADA POWER'S HARRY ALLEN 2 IS A PLANNED COAL FIRED UNIT TO BE LOCATED IN LAS VEGAS, NEVADA. THE UTILITY IS CONSIDERING A HOT SIDE ESP IN CONJUNC-TION WITH AN FGD SYSTEM. SPECIFICATIONS HAVE NOT YET BEEN PREPARED. START-UP IS SCHEDULED FOR 1995.

SECTION 2
STATUS OF FGD SYSTEMS

UNIT IDENTIFICATION	ABSTRACT
NEVADA POWER HARRY ALLEN 3 NEW 500 MW (GROSS) 500 MW (ESC) COAL ***** %S PROCESS NOT SELECTED VENDOR NOT SELECTED ENERGY CONSUMPTION: ****% STATUS 6 STARTUP 0/96	NEVADA POWER'S HARRY ALLEN 3 IS A PLANNED COAL FIRED UNIT TO BE LOCATED IN LAS VEGAS, NEVADA. THE UTILITY IS CONSIDERING A HOT SIDE ESP IN CONJUNCTION WITH AN FGD SYSTEM. SPECIFICATIONS HAVE NOT YET BEEN PREPARED. START-UP IS SCHEDULED FOR 1996.
NEVADA POWER HARRY ALLEN 4 NEW 500 MW (GROSS) 500 MW (ESC) COAL ***** %S PROCESS NOT SELECTED VENDOR NOT SELECTED ENERGY CONSUMPTION: ****% STATUS 6 STARTUP 0/97	NEVADA POWER'S HARRY ALLEN 4 IS A PLANNED COAL FIRED UNIT TO BE LOCATED IN LAS VEGAS, NEVADA. THE UTILITY IS CONSIDERING A HOT SIDE ESP IN CONJUNCTION WITH AN FGD SYSTEM. SPECIFICATIONS HAVE NOT YET BEEN PREPARED. START-UP IS SCHEDULED FOR 1997.
NEVADA POWER REID GARDNER 1 RETROFIT 125 MW (GROSS) 125 MW (ESC) COAL .50 %S BITUMINOUS SODIUM CARBONATE THYSSEN/CEA ENERGY CONSUMPTION: ****% STATUS 1 STARTUP 3/74	REID GARDNER 1 IS A 125-MW (GROSS) WET BOTTOM LOW SULFUR COAL (0.5% S, 12,450 BTU/LB) FIRED UNIT OWNED BY NEVADA POWER, LOCATED IN MOAPA, NEVADA. THE THYSSEN/CEA SODIUM CARBONATE-BASED (TRONA) SCRUBBING SYSTEM CONSISTS OF ONE MODULE CONTAINING TWIN VARIABLE THROAT VENTURIS FOLLOWED BY A SEPARATOR IN SERIES WITH A SINGLE STAGE PEFORATED PLATE WASH TOWER. PRIMARY PARTICULATE CONTROL IS PROVIDED BY UPSTREAM MULTICLONES. A RADIAL VANE MIST ELIMINATOR PRECEDES AN INDIRECT STEAM COIL REHEATER AND A 200 FOOT STACK. THE SYSTEM OPERATES IN A CLOSED WATER LOOP, AND THE SLUDGE IS DISPOSED IN AN ON-SITE CLAY LINED SOLAR EVAPORATION POND. THE DESIGN SO2 REMOVAL EFFICIENCY IS 90%. THE SYSTEM HAS BEEN OPERATIONAL SINCE MARCH 1974.
NEVADA POWER REID GARDNER 2 RETROFIT 125 MW (GROSS) 125 MW (ESC) COAL .50 %S BITUMINOUS SODIUM CARBONATE THYSSEN/CEA ENERGY CONSUMPTION: ****% STATUS 1 STARTUP 4/74	REID GARDNER 2 IS A 125-MW (GROSS) WET BOTTOM LOW SULFUR COAL (0.5% S, 12,450 BTU/LB) FIRED UNIT OWNED BY NEVADA POWER, LOCATED IN MOAPA, NEVADA. THE THYSSEN/CEA SODIUM CARBONATE-BASED (TRONA) SCRUBBING SYSTEM CONSISTS OF ONE MODULE CONTAINING TWIN VARIABLE THROAT VENTURIS FOLLOWED BY A SEPARATOR IN SERIES WITH A SINGLE STAGE PEFORATED PLATE WASH TOWER. PRIMARY PARTICULATE CONTROL IS PROVIDED BY UPSTREAM MULTICLONES. A RADIAL VANE MIST ELIMINATOR PRECEDES AN INDIRECT STEAM COIL REHEATER AND A 200 FOOT STACK. THE SYSTEM OPERATES IN A CLOSED WATER LOOP, AND THE SLUDGE IS DISPOSED IN AN ON-SITE CLAY LINED SOLAR EVAPORATION POND. THE DESIGN SO2 REMOVAL EFFICIENCY IS 90%. THE SYSTEM HAS BEEN OPERATIONAL SINCE APRIL 1974.
NEVADA POWER REID GARDNER 3 NEW 125 MW (GROSS) 125 MW (ESC) COAL .50 %S BITUMINOUS SODIUM CARBONATE THYSSEN/CEA ENERGY CONSUMPTION: ****% STATUS 1 STARTUP 6/76	REID GARDNER 3 IS A 125-MW (GROSS) WET BOTTOM LOW SULFUR BITUMINOUS COAL (0.5% S, 12,450 BTU/LB) FIRED FOSTER WHEELER UNIT LOCATED IN MOAPA, NEVADA. THE THYSSEN/CEA SODIUM CARBONATE-BASED (TRONA) SCRUBBING SYSTEM CONSISTS OF ONE MODULE CONTAINING TWIN VARIABLE THROAT VENTURIS FOLLOWED BY A SEPARATOR IN SERIES WITH A SINGLE STAGE PERFORATED PLATE WASH TOWER. PRIMARY PARTICULATE CONTROL IS PROVIDED BY UPSTREAM MULTICLONES. A RADIAL VANE MIST ELIMINATOR PRECEDES AN INDIRECT STEAM COIL REHEATER AND A 200 FOOT STACK. THE SYSTEM OPERATES IN A CLOSED WATER LOOP, AND THE SLUDGE IS DISPOSED IN AN ON-SITE CLAY LINED SOLAR EVAPORATION POND. THE DESIGN SO2 REMOVAL EFFICIENCY IS 90%. THE SYSTEM HAS BEEN OPERATIONAL SINCE JUNE 1976.
NEVADA POWER REID GARDNER 4 NEW 295 MW (GROSS) 250 MW (ESC) COAL .75 %S SODIUM CARBONATE THYSSEN/CEA ENERGY CONSUMPTION: ****% STATUS 1 STARTUP 6/83	REID GARDNER 4 IS A 295 MW (GROSS) LOW SULFUR COAL (0.75% S, 11,500 BTU/LB) FIRED UNIT LOCATED IN MOAPA, NEVADA. THE EMISSION CONTROL SYSTEM CONSISTS OF A THYSSEN/CEA SODIUM CARBONATE FGD SYSTEM FOR SO2 CONTROL. A BAGHOUSE PRECEDES THE FGD SYSTEM FOR PARTICULATE MATTER CONTROL. THE SYSTEM OPERATES IN AN OPEN WATER LOOP MODE AND FLUE GAS EXITS A 500 FT STACK. OPERATIONS COMMENCED IN JUNE 1983.

SECTION 2
STATUS OF FGD SYSTEMS

UNIT IDENTIFICATION	ABSTRACT
NEW YORK STATE ELEC & GAS SOMERSET 1 NEW 625 MW (GROSS) 625 MW (ESC) COAL 2.70 %S BITUMINOUS LIMESTONE PEABODY PROCESS SYSTEMS ENERGY CONSUMPTION: ****% STATUS 1 STARTUP 7/84	THE NEW YORK STATE ELECTRIC & GAS CORP. IS OPERATING A PULVERIZED BITUMINOUS COAL (2.2% S, 12,000 BTU/LB) FIRED BOILER SUPPLIED BY BABCOCK & WILCOX, IN SOMERSET, NEW YORK WHICH GENERATES A FLUE GAS FLOW OF 2,862,000 ACFM. A COLD SIDE ESP WITH A DESIGN EFFICIENCY OF 99.7% PROVIDES THE PRIMARY PARTICULATE REMOVAL. PEABODY PROCESS SYSTEMS SUPPLIED A LIMESTONE FGD SYSTEM WITH A DESIGN REMOVAL EFFICIENCY OF 90% FOR SO2 CONTROL. THE SYSTEM OPERATES IN A CLOSED WATER LOOP MODE AND FLUE GAS PASSES THROUGH AN IN-LINE STEAM REHEATER INTO A 450 FT STACK. THE SLUDGE IS DEWATERED AND STABILIZED BEFORE ON-SITE LANDFILLED. OPERATIONS COMMENCED IN JULY 1984.
NIAGARA MOHAWK POWER CHARLES R. HUNTLEY 66 RETROFIT 100 MW (GROSS) 100 MW (ESC) COAL 1.80 %S AQUEOUS CARBONATE/SPRAY DRYING ROCKWELL INTERNATIONAL ENERGY CONSUMPTION: ****% STATUS 1 STARTUP 4/82	CHARLES R. HUNTLEY 66 OF NIAGARA POWER COOP IS A PULVERIZED COAL (1.8% S, 12,500 BTU/LB) FIRED UNIT LOCATED IN BUFFALO, NEW YORK. ROCKWELL INTERNATIONAL DESIGNED AND INSTALLED A 90% EFFICIENT AQUEOUS CARBONATE FGD SYSTEM WHICH PRODUCES ELEMENTAL SULFUR AS AN END PRODUCT. FUNDS WERE PROVIDED BY THE U.S. EPA AND THE EMPIRE STATE ELECTRIC ENERGY RESEARCH CORP. A SPRAY DRYER IS FOLLOWED BY TWO BANKS OF 8 CYCLONES, AN ESP, AND A LINED 200 FOOT CARBON STEEL STACK. THE WATER LOOP IS OPEN. START-UP OF THE FGD SYSTEM WAS IN APRIL, 1982.
NORTHERN INDIANA PUB SERVICE SCHAHFER 17 NEW 391 MW (GROSS) 391 MW (ESC) COAL 3.20 %S BITUMINOUS DUAL ALKALI FMC ENERGY CONSUMPTION: ****% STATUS 1 STARTUP 4/83	SCHAHFER 17 OF NORTHERN INDIANA PUBLIC SERVICE IS A 391 MW (GROSS) COAL (3.2% S, 10,900 BTU/LB) FIRED UNIT LOCATED IN WHEATFIELD, INDIANA. THE FMC EMISSION CONTROL SYSTEM CONSISTS OF AN ESP FOLLOWED BY FOUR DUAL ALKALI WET ABSORBERS. THE CLEANED FLUE GAS IS REHEATED AND EXITS VIA A 500 FOOT STACK. INITIAL OPERATIONS COMMENCED IN APRIL 1983.
NORTHERN INDIANA PUB SERVICE SCHAHFER 18 NEW 391 MW (GROSS) 391 MW (ESC) COAL 3.20 %S BITUMINOUS DUAL ALKALI FMC ENERGY CONSUMPTION: ****% STATUS 2 STARTUP 6/86	SCHAHFER 18 OF NORTHERN INDIANA PUBLIC SERVICE IS A COAL (3.2% S, 11,085 BTU/LB) FIRED UNIT UNDER CONSTRUCTION IN WHEATFIELD, INDIANA. THE UTILITY AWARDED A CONTRACT TO FMC FOR THE INSTALLATION OF A DUAL ALKALI FGD SYSTEM AT THIS UNIT. PARTICULATE MATTER WILL BE COLLECTED BY AN ESP AND THE SYSTEM WILL INCLUDE A REHEATER. START-UP OF THIS UNIT IS SCHEDULED FOR JUNE 1986.
NORTHERN STATES POWER RIVERSIDE 6-7 RETROFIT 110 MW (GROSS) 110 MW (ESC) COAL 1.20 %S SUBBITUMINOUS LIME/SPRAY DRYING JOY MFG/NIRO ATOMIZER ENERGY CONSUMPTION: ****% STATUS 1 STARTUP 11/80	RIVERSIDE 6 AND 7 ARE TWO COAL FIRED BOILERS OWNED BY NORTHERN STATES POWER AND LOCATED IN MINNEAPOLIS, MINNESOTA. EACH BOILER GENERATES A FLUE GAS FLOW OF 340,000 ACFM AT 350 F. CURRENTLY, A DEMONSTRATION LIME/SPRAY DRYING FGD SYSTEM THAT IS CAPABLE OF TREATING THE FLUE GAS FROM BOTH BOILERS IS BEING TESTED AT THIS UNIT. THE SYSTEM WAS SUPPLIED BY NIRO ATOMIZER/JOY MANUFACTURING AND CONSISTS OF A SPRAY DRYER FOLLOWED BY A BAGHOUSE. THE CLEAN FLUE GAS IS VENTED TO TWO 275 FT CONCRETE STACKS WITH FIRE BRICK LINERS. SPENT ABSORBENT IS BEING DISPOSED OF IN AN OFF-SITE LANDFILL. OPERATIONS COMMENCED IN NOVEMBER 1980.
NORTHERN STATES POWER SHERBURNE 1 NEW 750 MW (GROSS) 750 MW (ESC) COAL .80 %S SUBBITUMINOUS LIMESTONE/ALKALINE FLYASH COMBUSTION ENGINEERING ENERGY CONSUMPTION: 4.0% STATUS 1 STARTUP 3/76	NORTHERN STATES POWER'S SHERBURNE 1 IS A BALANCED DRAFT PULVERIZED SUBBITUMINOUS COAL (0.80% S, 8400 BTU/LB) FIRED BOILER IN BECKER, MINNESOTA. A 50% EFFICIENT (DESIGN) LIMESTONE/ALKALINE FLYASH FGD SYSTEM SUPPLIED BY COMBUSTION ENGINEERING HAS BEEN OPERATIONAL ON THIS UNIT SINCE MARCH 1976. TWELVE VARIABLE THROAT ROD DECK VENTURI/MARBLE BED ABSORBER TRAINS ARE FOLLOWED BY ONE CHEVRON MIST ELIMINATOR/TRAIN, AN IN-LINE HOT WATER REHEATER, AND A 650 FOOT COR-TEN LINED STACK. THE SLUDGE IS FORCIBLY OXIDIZED AND DISPOSED IN A CLAY LINED SETTLING POND. THE WATER LOOP IS OPEN.

SECTION 2
STATUS OF FGD SYSTEMS

UNIT IDENTIFICATION	ABSTRACT
NORTHERN STATES POWER SHERBURNE 2 NEW 750 MW (GROSS) 750 MW (ESC) COAL .80 %S SUBBITUMINOUS LIMESTONE/ALKALINE FLYASH COMBUSTION ENGINEERING ENERGY CONSUMPTION: 4.0% STATUS 1 STARTUP 3/77	NORTHERN STATES POWER'S SHERBURNE 2 IS A BALANCED DRAFT PULVERIZED SUBBITUMINOUS COAL (0.80% S, 8400 BTU/LB) FIRED BOILER IN BECKER, MINNESOTA. A 50% EFFICIENT (DESIGN) LIMESTONE/ALKALINE FLYASH FGD SYSTEM SUPPLIED BY COMBUSTION ENGINEERING HAS BEEN OPERATIONAL ON THIS UNIT SINCE MARCH 1977. TWELVE VARIABLE THROAT ROD DECK VENTURI/MARBLE BED ABSORBER TRAINS ARE FOLLOWED BY ONE CHEVRON MIST ELIMINATOR/TRAIN, AN IN-LINE HOT WATER REHEATER, AND A 650 FOOT COR-TEN LINED STACK. THE SLUDGE IS FORCIBLY OXIDIZED AND DISPOSED IN A CLAY LINED SETTLING POND. THE WATER LOOP IS OPEN.
NORTHERN STATES POWER SHERBURNE 3 NEW 860 MW (GROSS) 810 MW (ESC) COAL 1.00 %S SUBBITUMINOUS LIME/SPRAY DRYING JOY MFG/NIRO ATOMIZER ENERGY CONSUMPTION: ****% STATUS 2 STARTUP 0/88	NORTHERN STATES POWER, SHERBURNE 3 IS A 800 MW (NET) PULVERIZED COAL (1.0% S, 8700 BTU/LB) FIRED BOILER UNDER CONSTRUCTION AND ADJACENT TO THE SHERBURNE 1 AND 2 UNITS IN BECKER, MINNESOTA. THE UTILITY AWARDED A CONTRACT TO JOY MFG/NIRO ATOMIZER FOR A LIME SPRAY DRYING SYSTEM TO CONTROL SO2 EMISSIONS. FABRIC FILTERS WILL BE EMPLOYED FOR PARTICULATE CONTROL. THE SYSTEM WILL OPERATE IN A CLOSED WATER LOOP MODE. INITIAL START UP IS SCHEDULED FOR JANUARY 1988.
ORLANDO UTILITIES COMMISSION C.H. STANTON 1 NEW 465 MW (GROSS) 465 MW (ESC) COAL ***** %S LIMESTONE COMBUSTION ENGINEERING ENERGY CONSUMPTION: ****% STATUS 2 STARTUP 0/87	ORLANDO UTILITIES COMMISSION IS CONSTRUCTING A 465 MW (GROSS), COAL FIRED UNIT, C.H. STANTON 1, NEAR ORLANDO, FLORIDA. THE UTILITY WILL CONTROL PARTICLE MATTER VIA ESP. SO2 EMISSIONS WILL BE CONTROLLED WITH A WET LIMESTONE FGD SYSTEM WITH A REMOVAL EFFICIENCY OF 90%, SUPPLIED BY COMBUSTION ENGINEERING. INITIAL START-UP IS SET FOR THE FALL OF 1987.
PACIFIC POWER & LIGHT JIM BRIDGER 1 RETROFIT 550 MW (GROSS) 550 MW (ESC) COAL .56 %S SUBBITUMINOUS SODIUM CARBONATE BABCOCK & WILCOX ENERGY CONSUMPTION: .2% STATUS 3 STARTUP 0/90	PACIFIC POWER AND LIGHT'S JIM BRIDGER 1 IS A DRY BOTTOM PULVERIZED SUBBITUMINOUS COAL (0.56%S, 9300 BTU/LB) FIRED BOILER SUPPLIED BY COMBUSTION ENGINEERING AND LOCATED IN ROCK SPRINGS, WYOMING. THE UTILITY HAS AWARDED A CONTRACT TO BABCOCK & WILCOX FOR A RETROFIT WET SODIUM CARBONATE FGD SYSTEM, WHICH TREATS 2,700,000 ACFM OF FLUE GAS. A COLD-SIDE ESP IS CURRENTLY IN OPERATION FOR PRIMARY PARTICULATE CONTROL. THE FGD SYSTEM WILL OPERATE IN A CLOSED WATER LOOP MODE AND FLUE GAS WILL EXIT A 500 FT STACK. START-UP IS SCHEDULED FOR 1990.
PACIFIC POWER & LIGHT JIM BRIDGER 2 RETROFIT 550 MW (GROSS) 550 MW (ESC) COAL .56 %S SUBBITUMINOUS SODIUM CARBONATE BABCOCK & WILCOX ENERGY CONSUMPTION: .2% STATUS 2 STARTUP 0/86	PACIFIC POWER AND LIGHT'S JIM BRIDGER 2 IS A DRY BOTTOM PULVERIZED SUBBITUMINOUS COAL (0.56% S, 9300 BTU/LB) FIRED BOILER SUPPLIED BY COMBUSTION ENGINEERING AND LOCATED IN ROCK SPRINGS, WYOMING. BABCOCK & WILCOX IS CONSTRUCTING A RETROFIT WET SODIUM CARBONATE FGD SYSTEM, WHICH WILL TREAT 2,700,000 ACFM OF FLUE GAS. A COLD-SIDE ESP IS CURRENLY IN OPERATION FOR PRIMARY PARTICULATE CONTROL. THE FGD SYSTEM WILL OPERATE IN A CLOSED WATER LOOP AND FLUE GAS WILL EXIT A 500 FT STACK. INITIAL START-UP IS SCHEDULED FOR 1986.
PACIFIC POWER & LIGHT JIM BRIDGER 3 RETROFIT 550 MW (GROSS) 550 MW (ESC) COAL .56 %S SUBBITUMINOUS SODIUM CARBONATE BABCOCK & WILCOX ENERGY CONSUMPTION: .2% STATUS 3 STARTUP 0/88	PACIFIC POWER AND LIGHT'S JIM BRIDGER 3 IS A DRY BOTTOM PULVERIZED SUBBITUMINOUS COAL (0.56%S, 9300 BTU/LB.) FIRED BOILER SUPPLIED BY COMBUSTION ENGINEERING AND LOCATED IN ROCK SPRINGS, WYOMING. THE UTILITY HAS AWARDED A CONTRACT TO BABCOCK & WILCOX FOR A RETROFIT WET SODIUM CARBONATE FGD SYSTEM, WHICH TREATS 2,700,000 ACFM OF FLUE GAS. A COLD-SIDE ESP IS CURRENTLY IN OPERATION FOR PRIMARY PARTICULATE CONTROL. THE FGD SYSTEM WILL OPERATE IN A CLOSED WATER LOOP MODE AND FLUE GAS WILL EXIT A 500 FT STACK. INITIAL START-UP IS SCHEDULED FOR 1988.

SECTION 2
STATUS OF FGD SYSTEMS

UNIT IDENTIFICATION	ABSTRACT
PACIFIC POWER & LIGHT JIM BRIDGER 4 NEW 550 MW (GROSS) 550 MW (ESC) COAL .56 %S SUBBITUMINOUS SODIUM CARBONATE AIR CORRECTION DIVISION, UOP ENERGY CONSUMPTION: .2% STATUS 1 STARTUP 9/79	PACIFIC POWER AND LIGHT'S JIM BRIDGER 4 IS A DRY BOTTOM PULVERIZED SUBBITUMINOUS COAL (0.56% S, 9300 BTU/LB) FIRED BOILER LOCATED IN ROCK SPRINGS, WYOMING. A 91% EFFICIENT SODIUM CARBONATE FGD SYSTEM FOR THIS UNIT WAS SUPPLIED BY THE AIR CORRECTION DIVISION OF UOP. A COLD SIDE ESP TREATS 2,720,000 ACFM OF FLUE GAS, FOLLOWED BY THREE SIEVE TRAY ABSORBERS. THE SYSTEM OPERATES IN A CLOSED WATER LOOP MODE AND FLUE GAS EXITS A 500 FT STACK. A SYSTEM CHECK OUT WAS CONDUCTED IN JULY 1979 AND OPERATIONS BEGAN IN SEPTEMBER 1979.
PACIFIC POWER & LIGHT WYODAK 1 RETROFIT 330 MW (GROSS) 330 MW (ESC) COAL ***** %S SUBBITUMINOUS LIME/SPRAY DRYING JOY/NIRO ENERGY CONSUMPTION: ****% STATUS 3 STARTUP 0/86	PACIFIC POWER AND LIGHT HAS AWARDED A CONTRACT TO JOY/NIRO TO RETROFIT A LIME SPRAY DRYING FGD SYSTEM WITH RECYCLE ASH ON WYODAK 1, A 330 MW(GROSS) SUBBITUMINOUS COAL FIRED UNIT. THE UNIT IS LOCATED IN JOLIET, WYOMING AND IS A MINE MOUTH PLANT. THE UNIT STARTED IN 1978 AND THE FGD SYSTEM IS SCHEDULED TO START-UP IN 1986.
PENNSYLVANIA POWER BRUCE MANSFIELD 1 NEW 917 MW (GROSS) 917 MW (ESC) COAL 3.50 %S BITUMINOUS LIME GE ENVIRONMENTAL SERVICES ENERGY CONSUMPTION: 4.1% STATUS 1 STARTUP 12/75	BRUCE MANSFIELD 1 OF PENNSYLVANIA POWER IS A SUPERCRITICAL, BALANCED DRAFT BOILER FIRING PULVERIZED COAL (3.5% S, 12,000 BTU/LB) IN SHIPPINGPORT, PENNSYLVANIA. A GEESI THIOSORBIC LIME FGD SYSTEM WAS DESIGNED TO REMOVE FLYASH AND SO2 (92.1%) FROM 3,350,000 ACFM OF FLUE GAS. THE FGD SYSTEM CONSISTS OF SIX VARIABLE THROAT VENTURI SCRUBBERS FOLLOWED BY SIX FIXED THROAT VENTURI ABSORBERS, HORIZONTAL MIST ELIMINATORS, TWO DIRECT COMBUSTION REHEATERS (INCLUDED IN ORIGINAL DESIGN BUT LATER REMOVED FROM SERVICE) AND A 950 FOOT FLAKEGLASS STACK SHARED BY UNITS 1 AND 2. THE WATER LOOP IS OPEN, AND THE CALCILOX FIXED SLUDGE IS DISPOSED IN AN OFF-SITE POND. THIS SYSTEM HAS BEEN OPERATIONAL SINCE DECEMBER 1975.
PENNSYLVANIA POWER BRUCE MANSFIELD 2 NEW 917 MW (GROSS) 917 MW (ESC) COAL 3.50 %S BITUMINOUS LIME GE ENVIRONMENTAL SERVICES ENERGY CONSUMPTION: 4.1% STATUS 1 STARTUP 7/77	BRUCE MANSFIELD 2 OF PENNSYLVANIA POWER IS A SUPERCRITICAL, BALANCED DRAFT BOILER FIRING PULVERIZED COAL (3.5% S, 12,000 BTU/LB) IN SHIPPINGPORT, PENNSYLVANIA. A GEESI THIOSORBIC LIME FGD SYSTEM WAS DESIGNED TO REMOVE FLYASH AND SO2 (92.1%) FROM 3,350,000 ACFM OF FLUE GAS. THE FGD SYSTEM CONSISTS OF SIX VARIABLE THROAT VENTURI SCRUBBERS FOLLOWED BY SIX FIXED THROAT VENTURI ABSORBERS, HORIZONTAL MIST ELIMINATORS, TWO DIRECT COMBUSTION REHEATERS (INCLUDED IN ORIGINAL DESIGN BUT LATER REMOVED FROM SERVICE) AND A 950 FOOT FLAKEGLASS STACK SHARED BY UNITS 1 AND 2. THE WATER LOOP IS OPEN, AND THE CALCILOX FIXED SLUDGE IS DISPOSED IN AN OFF-SITE POND. THIS SYSTEM HAS BEEN OPERATIONAL SINCE JULY 1977.
PENNSYLVANIA POWER BRUCE MANSFIELD 3 NEW 917 MW (GROSS) 917 MW (ESC) COAL 4.30 %S BITUMINOUS LIME M.W. KELLOGG ENERGY CONSUMPTION: 3.1% STATUS 1 STARTUP 6/80	BRUCE MANSFIELD 3 OF PENNSYLVANIA POWER IS A SUPERCRITICAL PULVERIZED COAL (4.3% S, 12,000 BTU/LB) FIRED BOILER LOCATED IN SHIPPINGPORT, PENNSYLVANIA. FOUR ESP'S TREAT 3,308,000 ACFM OF FLUE GAS, FOLLOWED BY FIVE (ONE SPARE) M. W. KELLOGG THIOSORBIC LIME ABSORBERS WHICH REMOVE 92.2% OF THE SO2. THE CLEANED GAS PASSES THROUGH CHEVRON MIST ELIMINATORS AND DIRECT COMBUSTION REHEATERS BEFORE DISCHARGE THROUGH A 600 FOOT INCONEL 625 STACK FLUE. THE SYSTEM OPERATES IN AN OPEN WATER LOOP MODE AND FLYASH STABILIZED SLUDGE IS PIPED TO AN OFF-SITE LANDFILL. OPERATIONS COMMENCED IN JUNE 1980.
PHILADELPHIA ELECTRIC CROMBY 1 RETROFIT 160 MW (GROSS) 150 MW (ESC) COAL 2.00 %S MAGNESIUM OXIDE UNITED ENGINEERS ENERGY CONSUMPTION: ****% STATUS 1 STARTUP 10/82	PHILADELPHIA ELECTRIC HAS RETROFITTED AN FGD SYSTEM ON ONE OF THE TWO 2.0% SULFUR COAL FIRED BOILERS AT CROMBY STATION IN PHOENIXVILLE, PENNSYLVANIA. THE MAGNESIUM OXIDE SYSTEM WAS SUPPLIED BY UNITED ENGINEERS. FABRIC FILTERS AND PARTICLE SCRUBBERS ARE EMPLOYED FOR PARTTICULATE CONTROL. THE SYSTEM BECAME OPERATIONAL IN OCTOBER 1982.

SECTION 2
STATUS OF FGD SYSTEMS

UNIT IDENTIFICATION	ABSTRACT
PHILADELPHIA ELECTRIC EDDYSTONE 1 RETROFIT 240 MW (GROSS) 240 MW (ESC) COAL 2.00 %S MAGNESIUM OXIDE UNITED ENGINEERS ENERGY CONSUMPTION: ****% STATUS 1 STARTUP 9/82	UNIT 1 OF PHILADELPHIA ELECTRIC'S EDDYSTONE, PENNSYLVANIA STATION IS A BITUMINOUS COAL (2.0% S, 13,600 BTU/LB) FIRED UNIT WHICH USES ESP'S, MECHANICAL COLLECTORS, AND THREE PARTICLE SCRUBBERS (TWO ROD DECK SPRAY TOWERS AND ONE VENTURI) FOR PRIMARY PARTICLE CONTROL. THE UNIT 1 FGD SYSTEM FOLLOWS THE TWO ROD DECK SPRAY TOWERS. UNITED ENGINEERS SUPPLIED A MAGNESIUM OXIDE FGD SYSTEM FOR SO2 EMISSION CONTROL SIMILAR TO THE MAGNESIUM OXIDE PROTOTYPE SYSTEM THAT WAS PREVIOUSLY OPERATED AT THIS UNIT. THE SYSTEM OPERATES IN AN OPEN WATER LOOP MODE. OPERATIN OF THE FGD SYSTEM COMMENCED IN SEPTEMBER 1982.
PHILADELPHIA ELECTRIC EDDYSTONE 2 RETROFIT 334 MW (GROSS) 334 MW (ESC) COAL 2.00 %S MAGNESIUM OXIDE UNITED ENGINEERS ENERGY CONSUMPTION: ****% STATUS 1 STARTUP 11/82	EDDYSTONE 2 OF PHILADELPHIA ELECTRIC IS A 2.0% SULFUR COAL FIRED BOILER LOCATED IN EDDYSTONE, PENNSYLVANIA. THE PLANT'S GENERATING CAPACITY IS 334 MW. UNITED ENGINEERS HAS SUPPLIED A MAGNESIUM OXIDE FGD SYSTEM FOR EMISSION CONTROL AND PARTICLE SCRUBBERS ARE EMPLOYED FOR PARTICULATE REMOVAL. OPERATIONS COMMENCED IN NOVEMBER 1982.
PLAINS ELECTRIC G & T PLAINS ESCALANTE 1 NEW 233 MW (GROSS) 233 MW (ESC) COAL .80 %S SUBBITUMINOUS LIMESTONE COMBUSTION ENGINEERING ENERGY CONSUMPTION: ****% STATUS 2 STARTUP 10/84	PLAINS ESCALANTE 1 OF PLAINS ELECTRIC G & T IS A PULVERIZED SUBBITUMINOUS COAL (.80% S) FIRED UNIT UNDER CONSTRUCTION IN PREWITT, NEW MEXICO. THE 233 MW UNIT SUPPLIED BY COMBUSTION ENGINEERING WILL UTILIZE A WET LIMESTONE SCRUBBING PROCESS WITH A SO2 REMOVAL EFFICIENCY OF 75%. A FABRIC FILTER SUPPLIED BY GE ENVIRONMENTAL SERVICES WILL PROVIDE PRIMARY PARTICLE CONTROL. SLUDGE WILL BE MIXED WITH FLYASH AND DISPOSED AT AN ON-SITE LANDFILL. A CONTRACT WAS AWARDED TO COMBUSTION ENGINEERING FOR THE WET LIMESTONE SYSTEM. INITIAL START-UP IS SCHEDULED FOR OCTOBER 1984.
PLATTE RIVER POWER AUTHORITY RAWHIDE 1 NEW 279 MW (GROSS) 279 MW (ESC) COAL .34 %S BITUMINOUS LIME/SPRAY DRYING JOY MFG/NIRO ATOMIZER ENERGY CONSUMPTION: ****% STATUS 1 STARTUP 12/83	RAWHIDE 1, OF THE PLATTE RIVER POWER AUTHORITY, IS LOCATED IN WELLINGTON, COLORADO. THE 279 MW PULVERIZED COAL (0.34% S, 8500 BTU/LB) FIRED BOILER WAS SUPPLIED BY COMBUSTION ENGINEERING. JOY MANUFACTURING/NIRO ATOMIZER SUPPLYED A DRY LIME SCRUBBING SYSTEM FOR SO2 CONTROL AND FABRIC FILTERS ARE EMPLOYED FOR PARTICULATE REMOVAL. THE SYSTEM OPERATES IN A CLOSED WATER LOOP MODE AND SLUDGE IS DISPOSED OF IN A LANDFILL. FLUE GAS EXITS A 505 FT STACK. THE UNIT COMMENCED INITIAL OPERATIONS IN DECEMBER 1983.
PUBLIC SERVICE INDIANA GIBSON 5 NEW 670 MW (GROSS) 670 MW (ESC) COAL 3.30 %S LIMESTONE M.W. KELLOGG ENERGY CONSUMPTION: ****% STATUS 1 STARTUP 10/82	GIBSON 5 OF PUBLIC SERVICE OF INDIANA IS A 3.3% SULFUR COAL FIRED UNIT LOCATED IN PRINCETON, INDIANA. THE SYSTEM SUPPLIER, M.W. KELLOG, HAS INSTALLED A LIMESTONE FGD SYSTEM CONSISTING OF FOUR KELLOGG-WEIR ABSORBER-REACTOR MODULES. THE SYSTEM USES KELLOGG'S PROPRIETARY MAGNESIUM-PROMOTED LIMESTONE. ESP'S ARE EMPLOYED FOR PARTICULATE CONTROL AND FLUE GAS EXITS A 500 FT STACK. THE SYSTEM OPERATES IN A CLOSED WATER LOOP MODE. OPERATINS COMMENCED IN OCTOBER 1982.
PUBLIC SERVICE OF NEW MEXICO NEW MEXICO 1 NEW 500 MW (GROSS) 500 MW (ESC) COAL ***** %S SUBBITUMINOUS PROCESS NOT SELECTED VENDOR NOT SELECTED ENERGY CONSUMPTION: ****% STATUS 6 STARTUP 0/95	PUBLIC SERVICE OF NEW MEXICO HAS PLANS FOR A NEW UNIT, NEW MEXICO 1, TO BE LOCATED IN BISTI, NEW MEXICO. THE PULVERIZED SUBBITUMINOUS COAL (9000 BTU/LB) FIRED UNIT WILL HAVE A GROSS MEGAWATT RATING OF 500. THE UTILITY IS CONSIDERING WET LIMESTONE OR LIME/SPRAY DRYING FGD SYSTEMS FOR SO2 CONTROL AND FABRIC FILTER FOR PARTICULATE CONTROL. THE SYSTEM WILL OPERATE IN A CLOSED WATER LOOP MODE. INITIAL START-UP IS SCHEDULED FOR 1995.

SECTION 2
STATUS OF FGD SYSTEMS

UNIT IDENTIFICATION	ABSTRACT
PUBLIC SERVICE OF NEW MEXICO SAN JUAN 1 RETROFIT 361 MW (GROSS) 361 MW (ESC) COAL .80 %S SUBBITUMINOUS WELLMAN LORD DAVY MCKEE ENERGY CONSUMPTION: 4.4% STATUS 1 STARTUP 4/78	SAN JUAN 1 OF PUBLIC SERVICE OF NEW MEXICO IN WATERFLOW, NEW MEXICO IS A COAL (0.8% S, 9000 BTU/LB) FIRED BOILER WHICH SUPPLIES 1,319,000 ACFM OF FLUE GAS TO A RETROFIT WELLMAN LORD FGD SYSTEM BY DAVY MCKEE. THE EMISSION CONTROL SYSTEM, OPERATIONAL SINCE APRIL 1978, CONSISTS OF A HOT SIDE ESP FOLLOWED BY FOUR (ONE SPARE) VENTURI SCRUBBER/SPRAY TOWER ABSORBER TRAINS WHICH WERE DESIGNED TO REMOVE 85% OF THE FLUE GAS SO2. AN INDIRECT HOT AIR REHEATER PRECEDES A 400 FT BRICK LINED STACK. ACCORDING TO THE ORIGINAL DESIGN, THE SYSTEM EMPLOYED THE ALLIED CHEMICAL PROCESS FOR ELEMENTAL SULFUR RECOVERY. THE SYSTEM HAS SINCE BEEN MODIFIED TO PRODUCE SULFURIC ACID. THE WATER LOOP IS CLOSED.
PUBLIC SERVICE OF NEW MEXICO SAN JUAN 2 RETROFIT 350 MW (GROSS) 350 MW (ESC) COAL .80 %S SUBBITUMINOUS WELLMAN LORD DAVY MCKEE ENERGY CONSUMPTION: 4.6% STATUS 1 STARTUP 8/78	SAN JUAN 2 OF PUBLIC SERVICE OF NEW MEXICO IN WATERFLOW, NEW MEXICO IS A COAL (0.8% S, 9000 BTU/LB) FIRED BOILER WHICH SUPPLIES 1,319,000 ACFM OF FLUE GAS TO A RETROFIT WELLMAN LORD FGD SYSTEM BY DAVY MCKEE. THE EMISSION CONTROL SYSTEM, OPERATIONAL SINCE AUGUST 1978, CONSISTS OF A HOT SIDE ESP FOLLOWED BY FOUR (ONE SPARE) VENTURI SCRUBBER/SPRAY TOWER ABSORBER TRAINS WHICH WERE DESIGNED TO REMOVE 85% OF THE FLUE GAS SO2. AN INDIRECT HOT AIR REHEATER PRECEDES A 400 FT BRICK LINED STACK. ACCORDING TO THE ORIGINAL DESIGN, THE SYSTEM EMPLOYED THE ALLIED CHEMICAL PROCESS FOR ELEMENTAL SULFUR RECOVERY. THE SYSTEM HAS SINCE BEEN MODIFIED TO PRODUCE SULFURIC ACID. THE WATER LOOP IS CLOSED.
PUBLIC SERVICE OF NEW MEXICO SAN JUAN 3 NEW 534 MW (GROSS) 534 MW (ESC) COAL .80 %S SUBBITUMINOUS WELLMAN LORD DAVY MCKEE ENERGY CONSUMPTION: 3.6% STATUS 1 STARTUP 12/79	SAN JUAN 3 IS A COAL (0.8% S, 9000 BTU/LB) FIRED UNIT OF THE PUBLIC SERVICE OF NEW MEXICO AND IS LOCATED IN WATERFLOW, NEW MEXICO. THE FGD SYSTEM, SUPPLIED BY DAVY MCKEE UTILIZES THE WELLMAN LORD SO2 RECOVERY RECOVERY PROCESS AND SULFURIC ACID IS PRODUCED AS THE END PRODUCT. FIVE (ONE SPARE) VENTURI SCRUBBER/SPRAY TOWER ABSORBER (90% DESIGN SO2 REMOVAL) TRAINS FOLLOW A HOT SIDE ESP AND FLUE GAS EXITS A 400 FT STACK. AN INDIRECT HOT AIR REHEATER BOOSTS THE GAS TEMPERATURE 50 DEG F. THE SYSTEM OPERATES IN A CLOSED WATER LOOP MODE. OPERATIONS COMMENCED IN DECEMBER 1979.
PUBLIC SERVICE OF NEW MEXICO SAN JUAN 4 NEW 534 MW (GROSS) 534 MW (ESC) COAL .80 %S SUBBITUMINOUS WELLMAN LORD DAVY MCKEE ENERGY CONSUMPTION: 3.6% STATUS 1 STARTUP 5/82	SAN JUAN 4 IS A COAL (0.8% S, 8100 BTU/LB) FIRED UNIT OF THE PUBLIC SERVICE OF NEW MEXICO LOCATED IN WATERFLOW, NEW MEXICO. THE FGD SYSTEM, WHICH WAS SUPPLIED BY DAVY MCKEE, UTILIZES THE WELLMAN LORD SO2 RECOVERY PROCESS AND SULFURIC ACID IS PRODUCED AS THE END PRODUCT. FIVE (ONE SPARE) VENTURI SCRUBBER/SPRAY TOWER ABSORBER (90% DESIGN SO2 REMOVAL) TRAINS FOLLOW A HOT SIDE ESP AND FLUE GAS EXITS A 400 FT STACK. AN INDIRECT HOT AIR REHEATER BOOSTS THE GAS TEMPERATURE 50 DEG F. THE SYSTEM OPERAES WATER LOOP MODE. THE SYSTEM COMMENCED OPERATIONS IN MAY 1982.
PUB. SER. CO. OF COLORADO PAWNEE 2 NEW 500 MW (GROSS) 500 MW (ESC) .35 %S TRONA/DRY INJECTION VENDOR NOT SELECTED ENERGY CONSUMPTION: ****% STATUS 6 STARTUP 0/90	PUBLIC SERVICE COMPANY OF COLORADO HAS PLANS FOR A NEW UNIT, PAWNEE 2, TO BE LOCATED NEAR RUSH, COLORADO. THE 500 MW (GROSS) BABCOCK & WILCOX BOILER WILL FIRE SUBBITUMINOUS COAL (8290 BTU/LB, .35% S). FABRIC FILTERS WILL BE UTILIZED FOR PARTICULATE REMOVAL AND SO2 EMISSIONS WILL BE CONTROLLED THROUGH INJECTION OF DRY TRONA. THE TRONA WILL BE PULVERIZED AND BLOWN INTO THE DUCTWORK UPSTREAM OF THE BAGHOUSE FOR CONTACT WITH FLUE GAS ON THE DUCT AND BAGHOUSE SURFACES. FLUE GAS WILL EXIT A 450 FOOT STACK. INITIAL START UP IS SCHEDULED FOR 1990.
SALT RIVER PROJECT CORONADO 1 NEW 400 MW (GROSS) 320 MW (ESC) COAL .55 %S SUBBITUMINOUS LIMESTONE M.W. KELLOGG ENERGY CONSUMPTION: 1.3% STATUS 1 STARTUP 11/79	SALT RIVER PROJECT'S CORONADO 1 IS A DRY BOTTOM PULVERIZED SUBBITUMINOUS COAL (0.55% S, 10,800 BTU/LB) FIRED BOILER LOCATED IN ST. JOHNS, ARIZONA. M. W. KELLOGG SUPPLIED THE TWO LIMESTONE HORIZONTAL WEIR SPRAY TOWERS WHICH REMOVE 82.5% OF THE SO2 FROM THE FLUE GAS PASSED THROUGH THEM. PARTICLE SCRUBBERS AND ESP'S ARE EMPLOYED FOR PARTICULATE REMOVAL AND VERTICAL HEIL MIST ELIMINATORS PRECEDE A 500 FT STACK. A MINIMUM OF 20% BYPASS PROVIDES REHEAT. THE WATER LOOP IS OPEN, AND THE UNSTABILIZED SLUDGE IS DISPOSED OF IN AN UNLINED POND. START-UP WAS IN NOVEMBER 1979.

SECTION 2
STATUS OF FGD SYSTEMS

UNIT IDENTIFICATION	ABSTRACT
SALT RIVER PROJECT CORONADO 2 NEW 400 MW (GROSS) 320 MW (ESC) COAL .55 %S SUBBITUMINOUS LIMESTONE M.W. KELLOGG ENERGY CONSUMPTION: 1.3% STATUS 1 STARTUP 7/80	SALT RIVER PROJECT'S CORONADO 2 IS A DRY BOTTOM PULVERIZED SUBBITUMINOUS COAL (0.55% S, 10,800 BTU/LB) FIRED BOILER LOCATED IN ST. JOHNS, ARIZONA. M. W. KELLOGG SUPPLIED TWO LIMESTONE HORIZONTAL WEIR SPRAY TOWERS WHICH REMOVE 82.5% OF THE SO2 FROM THE FLUE GAS PASSED THROUGH THEM. PARTICLE SCRUBBERS AND ESP'S ARE EMPLOYED FOR PARTICULATE REMOVAL AND VERTICAL HEIL MIST ELIMINATORS PRECEDE A 500 FT STACK. A MINIMUM OF 20% BYPASS PROVIDES REHEAT. THE WATER LOOP IS OPEN, AND THE UNSTABILIZED SLUDGE IS DISPOSED OF IN AN UNLINED POND. START-UP WAS IN JULY 1980.
SALT RIVER PROJECT CORONADO 3 NEW 400 MW (GROSS) 280 MW (ESC) COAL .60 %S SUBBITUMINOUS LIMESTONE VENDOR NOT SELECTED ENERGY CONSUMPTION: 3.8% STATUS 6 STARTUP 0/92	CORONADO 3 IS A DRY BOTTOM PULVERIZED SUBBITUMINOUS COAL (.60% S, 8300 BTU /LB) FIRED UNIT PLANNED BY SALT RIVER PROJECT TO BE LOCATED IN ST. JOHN'S, ARIZONA. THE UTILITY IS PRESENTLY CONSIDERING THE INSTALLATION OF TWO HORIZONTAL LIMESTONE SPRAY TOWERS FOR SO2 CONTROL AND FABRIC FILTERS FOR PARTICULATE REMOVAL. THE SYSTEM WILL HAVE A 20% BYPASS REHEAT, AN OPEN WATER LOOP, A 200 FT STACK AND THE SLUDGE WILL BE PONDED. SCHEDULED OPERATIONS ARE PLANNED TO BEGIN IN 1992.
SAN ANTONIO PUBLIC SERVICE N/D 1 NEW 500 MW (GROSS) 500 MW (ESC) LIGNITE 1.50 %S LIMESTONE VENDOR NOT SELECTED ENERGY CONSUMPTION: ****% STATUS 6 STARTUP 0/93	SAN ANTONIO PUBLIC SERVICE HAS PLANS FOR FOUR NEW UNITS (NAME AND LOCATION UNDECIDED). THE LIGNITE (5600 BTU/LB, 1-2% S) FIRED UNITS WILL HAVE A GROSS MEGAWATT RATING OF 500 EACH AND WILL UTILIZE A LIMESTONE FGD SYSTEM. THE FOUR UNITS ARE SCHEDULED TO COMMENCE OPERATIONS IN 1993, 1995, 1999, AND 2001 RESPECTIVELY._ND 2001 RESPECTIVELY.
SAN ANTONIO PUBLIC SERVICE N/D 2 NEW 500 MW (GROSS) 500 MW (ESC) LIGNITE 1.50 %S LIMESTONE VENDOR NOT SELECTED ENERGY CONSUMPTION: ****% STATUS 6 STARTUP 0/95	SAN ANTONIO PUBLIC SERVICE HAS PLANS FOR FOUR NEW UNITS (NAME AND LOCATION UNDECIDED). THE LIGNITE (5600 BTU/LB, 1-2% S) FIRED UNITS WILL HAVE A GROSS MEGAWATT RATING OF 500 EACH AND WILL UTILIZE A LIMESTONE FGD SYSTEM. THE FOUR UNITS ARE SCHEDULED TO COMMENCE OPERATION IN 1993, 1995, 1999, AND 2001 RESPECTIVELY.
SAN ANTONIO PUBLIC SERVICE N/D 3 NEW 500 MW (GROSS) 500 MW (ESC) LIGNITE 1.50 %S LIMESTONE VENDOR NOT SELECTED ENERGY CONSUMPTION: ****% STATUS 6 STARTUP 0/99	SAN ANTONIO PUBLIC SERVICE HAS PLANS FOR FOUR NEW UNITS (NAME AND LOCATION UNDECIDED). THE LIGNITE (5600 BTU/LB, 1-2% S) FIRED UNITS WILL HAVE A GROSS MEGAWATT RATING OF 500 EACH AND WILL UTILIZE A LIMESTONE FGD SYSTEM. THE FOUR UNITS ARE SCHEDULED TO COMMENCE OPERATIONS IN 1993, 1995, 1999, AND 2001 RESPECTIVELY.
SAN ANTONIO PUBLIC SERVICE N/D 4 NEW 500 MW (GROSS) 500 MW (ESC) LIGNITE 1.50 %S LIMESTONE VENDOR NOT SELECTED ENERGY CONSUMPTION: ****% STATUS 6 STARTUP 99/99	SAN ANTONIO PUBLIC SERVICE HAS PLANS FOR FOUR NEW UNITS (NAME AND LOCATION UNDECIDED). THE LIGNITE (5600 BTU/LB, 1-2% S) FIRED UNITS WILL HAVE A GROSS MEGAWATT RATING OF 500 EACH AND WILL UTILIZE A LIMESTONE FGD SYSTEM. THE FOUR UNITS ARE SCHEDULED TO COMMENCE OPERATIONS IN 1993, 1995, 1999, AND 2001 RESPECTIVELY.

SECTION 2
STATUS OF FGD SYSTEMS

UNIT IDENTIFICATION	ABSTRACT
SAN MIGUEL ELECTRIC SAN MIGUEL 1 NEW 400 MW (GROSS) 400 MW (ESC) COAL 2.39 %S LIGNITE LIMESTONE BABCOCK & WILCOX ENERGY CONSUMPTION: 5.0% STATUS 1 STARTUP 8/81	SAN MIGUEL 1 OF THE SAN MIGUEL ELECTRIC COOP IS A LIGNITE (2.39% S, 5000 BTU/LB) FIRED RADIANT BOILER LOCATED IN SAN MIGUEL, TEXAS. THE EMISSION CONTROL SYSTEM ON THIS UNIT CONSISTS OF A COLD SIDE ESP FOLLOWED BY FOUR BABCOCK AND WILCOX 86% EFFICIENT LIMESTONE TRAY TOWERS. CHEVRON MIST ELIMINATORS PRECEDE AN IN-LINE REHEATER AND A 450 FT ACID BRICK LINED STACK. THE SYSTEM OPERATES IN A CLOSED WATER LOOP MODE. WASTE SLUURY IS DEWATERED, MIXED WITH FLYASH AND DISPOSED OF IN AN OFF-SITE LANDFILL. OPERATIONS COMMENCED IN AUGUST 1981.
SEMINOLE ELECTRIC SEMINOLE 1 NEW 620 MW (GROSS) 620 MW (ESC) COAL 2.75 %S BITUMINOUS LIMESTONE PEABODY PROCESS SYSTEMS ENERGY CONSUMPTION: ****% STATUS 1 STARTUP 5/83	SEMINOLE 1 OF SEMINOLE ELECTRIC IS A PULVERIZED COAL (2.75% S, 11,700 BTU/LB) UNIT LOCATED IN PALATKA, FLORIDA. THE EMISSION CONTROL SYSTEM CONSISTS OF RESEARCH-COTTRELL ESP'S WITH 99.6% REMOVAL EFFICIENCY AND A PEABODY PROCESS LIMESTONE FGD SYSTEM DESIGNED TO REMOVE 86% OF THE SO2. AN ADDITIONAL 4% SO2 REMOVAL IS ACHIEVED THROUGH COAL WASHING. THE CLEANED FLUE GAS EXITS THROUGH A 675 FOOT ACID BRICK LINED STACK AND SLUDGE DISPOSAL IS HANDLED VIA THE POZ-O-TEC CONVERSION SYSTEM. START-UP COMMENCED IN MAY 1983.
SEMINOLE ELECTRIC SEMINOLE 2 NEW 620 MW (GROSS) 620 MW (ESC) COAL 2.75 %S SUBBITUMINOUS LIMESTONE PEABODY PROCESS SYSTEMS ENERGY CONSUMPTION: ****% STATUS 1 STARTUP 9/84	SEMINOLE 2 OF SEMINOLE ELECTRIC IS A PULVERIZED COAL (2.75% S, 11,700 BTU/LB) UNIT LOCATED IN PALATKA, FLORIDA. THE EMISSION CONTROL SYSTEM CONSISTS OF RESEARCH-COTTRELL ESP'S WITH 99.6% REMOVAL EFFICIENCY AND A PEABODY PROCESS LIMESTONE FGD SYSTEM DESIGNED TO REMOVE 86% OF THE SO2. AN ADDITIONAL 4% SO2 REMOVAL IS ACHIEVED THROUGH COAL WASHING. THE CLEANED FLUE GAS EXITS THROUGH A 675 FOOT ACID BRICK LINED STACK AND SLUDGE DISPOSAL IS HANDLED VIA THE POZ-O-TEC CONVERSION SYSTEM. START-UP COMMENCED IN SEPTEMBER 1984.
SEMINOLE ELECTRIC TAYLOR 1 NEW 620 MW (GROSS) 620 MW (ESC) COAL ***** %S PROCESS NOT SELECTED VENDOR NOT SELECTED ENERGY CONSUMPTION: ****% STATUS 6 STARTUP 99/99	SEMINOLE ELECTRIC HAS PLANS TO CONSTRUCT A 620 MW (GROSS) UNIT, TAYLOR 1, TO BE LOCATED IN PERRY, FLORIDA. THE UTILITY IS PRESENTLY CONSIDERING ONLY FGD SYSTEMS AS THE CONTROL STRATEGY. START-UP HAS BEEN DEFERRED INDEFINITELY.
SEMINOLE ELECTRIC TAYLOR 2 NEW 620 MW (GROSS) 620 MW (ESC) COAL ***** %S PROCESS NOT SELECTED VENDOR NOT SELECTED ENERGY CONSUMPTION: ****% STATUS 6 STARTUP 99/99	SEMINOLE ELECTRIC HAS PLANS TO CONSTRUCT A 620 MW (GROSS) UNIT, TAYLOR 2, TO BE LOCATED IN PERRY, FLORIDA. THE UTILITY IS PRESENTLY CONSIDERING ONLY FGD SYSTEMS AS THE CONTROL STRATEGY. START-UP HAS BEEN DEFERRED INDEFINITELY.
SIERRA PACIFIC POWER THOUSAND SPRINGS 1 NEW 500 MW (GROSS) 500 MW (ESC) COAL ***** %S PROCESS NOT SELECTED VENDOR NOT SELECTED ENERGY CONSUMPTION: ****% STATUS 6 STARTUP 0/90	SIERRA PACIFIC POWER HAS PLANS FOR THREE NEW UNITS, THOUSAND SPRINGS 1,2 AND 3 TO BE LOCATED IN WELLS, NEVADA. THE UNITS WILL HAVE A GROSS MEGAWATT RATING OF 500 EACH AND WILL UTILIZE AN FGD SYSTEM FOR CONTROL OF SO2 EMISSIONS. UNITS 1,2 AND 3 ARE SCHEDULED TO START UP IN 1990, 1995 AND 1999 RESPECTIVELY.

SECTION 2
STATUS OF FGD SYSTEMS

UNIT IDENTIFICATION	ABSTRACT
SIERRA PACIFIC POWER THOUSAND SPRINGS 2 NEW 500 MW (GROSS) 500 MW (ESC) COAL ***** %S PROCESS NOT SELECTED VENDOR NOT SELECTED ENERGY CONSUMPTION: ****% STATUS 6 STARTUP 0/95	SIERRA PACIFIC POWER HAS PLANS FOR THREE NEW UNITS, THOUSAND SPRINGS 1,2 AND 3 TO BE LOCATED IN WELLS, NEVADA. THE UNITS WILL HAVE A GROSS MEGAWATT RATING OF 500 EACH AND WILL UTILIZE AN FGD SYSTEM FOR CONTROL OF SO2 EMISSIONS. UNITS 1,2 AND 3 ARE SCHEDULED TO START UP IN 1990, 1995 AND 1999 RESPECTIVELY.
SIERRA PACIFIC POWER THOUSAND SPRINGS 3 NEW 500 MW (GROSS) 500 MW (ESC) COAL ***** %S PROCESS NOT SELECTED VENDOR NOT SELECTED ENERGY CONSUMPTION: ****% STATUS 6 STARTUP 0/99	SIERRA PACIFIC POWER HAS PLANS FOR THREE NEW UNITS, THOUSAND SPRINGS 1,2 AND 3 TO BE LOCATED IN WELLS, NEVADA. THE UNITS WILL HAVE A GROSS MEGAWATT RATING OF 500 EACH AND WILL UTILIZE AN FGD SYSTEM FOR CONTROL OF SO2 EMISSIONS. UNITS 1,2 AND 3 ARE SCHEDULED TO START UP IN 1990, 1995 AND 1999 RESPECTIVELY.
SIERRA PACIFIC POWER VALMY 2 NEW 276 MW (GROSS) 276 MW (ESC) COAL .50 %S LIME/SPRAY DRYING ROCKWELL INTERNATIONAL ENERGY CONSUMPTION: .0% STATUS 2 STARTUP 6/85	SIERRA PACIFIC POWER IS CONSTRUCTING A 276 MW UNIT LOCATED IN VALMY, NEVADA. THE FOSTER WHEELER PULVERIZED COAL (.5% S) FIRED BOILER AT THE VALMY 2 STATION WILL UTILIZE A LIME/SPRAY DRYING FGD SYSTEM SUPPLIED BY ROCKWELL INTERNATIONAL. A FABRIC FILTER WILL CONTROL PARTICLE EMISSIONS AND FLUE GAS WILL EXIT A 500 FT STACK. THE UNIT IS SCHEDULED TO COMMENCE OPERATIONS IN JUNE 1985.
SIKESTON BRD OF MUNICIPAL UTIL SIKESTON 1 NEW 235 MW (GROSS) 235 MW (ESC) COAL 2.80 %S BITUMINOUS LIMESTONE BABCOCK & WILCOX ENERGY CONSUMPTION: 1.7% STATUS 1 STARTUP 6/81	THE SIKESTON BOARD OF MUNICIPAL UTILITIES' SIKESTON 1 IS A PULVERIZED COAL (2.8% S, 11,340 BTU/LB) FIRED BOILER LOCATED IN SIKESTON, MISSOURI. BABCOCK AND WILCOX SUPPLIED THE EMISSION CONTROL SYSTEM CONSISTING OF TWO ESP'S AND THREE 50% CAPACITY LIMESTONE VENTURI FGD MODULES. THE CLEANED GAS PASSES THROUGH CHEVRON MIST ELIMINATORS BEFORE EXITING A 450 FOOT FRP LINED FLUE (A SECOND CARBON STEEL LINED FLUE, USED FOR EMERGENCY BYPASS, IS ALSO IN THE STACK). THE WATER LOOP MODE IS OPEN, AND THE SLUDGE IS PONDED. THE SYSTEM STARTED OPERATIONS IN JUNE 1981.
SOUTH CAROLINA PUBLIC SERVICE CROSS 1 NEW 450 MW (GROSS) 450 MW (ESC) COAL 1.80 %S BITUMINOUS LIMESTONE PEABODY PROCESS SYSTEMS ENERGY CONSUMPTION: ****% STATUS 3 STARTUP 5/91	SOUTH CAROLINA PUBLIC SERVICE HAS PLANS TO CONSTRUCT A NEW UNIT, CROSS 1 TO BE LOCATED IN CROSS, SOUTH CAROLINA. THE 450 MW BOILER WILL FIRE COAL (1.8% S, 11,200 BTU/LB). THE UTILITY HAS SIGNED A CONTRACT WITH PEABODY PROCESS SYSTEMS FOR THE INSTALLATION OF A WET LIMESTONE SCRUBBING SYSTEM TO CONTROL SO2 EMISSIONS. A COLD SIDE ESP WILL CONTROL PARTICLE EMISSIONS AND THE CLEANED FLUE GAS WILL EXIT A 600 FOOT STACK. THE SYSTEM WILL OPERATE IN A CLOSED WATER LOOP MODE. UNIT 1 IS SCHEDULED TO COMMENCE OPERATIONS IN MAY 1991.
SOUTH CAROLINA PUBLIC SERVICE CROSS 2 NEW 450 MW (GROSS) 450 MW (ESC) COAL 1.80 %S BITUMINOUS LIMESTONE PEABODY PROCESS SYSTEMS ENERGY CONSUMPTION: ****% STATUS 1 STARTUP 10/83	SOUTH CAROLINA PUBLIC SERVICE HAS ANNOUNCED THE INITIAL START-UP OF CROSS 2, LOCATED IN CROSS, SOUTH CAROLINA. THE 450 MW BOILER FIRES 1.8% S, 11,200 BTU/LB COAL. A WET LIMESTONE SCRUBBING SYSTEM SUPPLIED BY PEABODY PROCESS SYSTEMS CONTROLS SO2 EMISSIONS AND PARTICULATE MATTER IS CONTROLLED VIA A COLD SIDE ESP. THE CLEANED FLUE GAS EXITS A 600 FT STACK AND THE SYSTEM OPERATES IN A CLOSED WATER LOOP MODE. INITIAL START-UP COMMENCED IN OCTOBER 1983.

SECTION 2
STATUS OF FGD SYSTEMS

UNIT IDENTIFICATION	ABSTRACT
SOUTH CAROLINA PUBLIC SERVICE WINYAH 2 NEW 280 MW (GROSS) 140 MW (ESC) COAL 1.00 %S BITUMINOUS LIMESTONE BABCOCK & WILCOX ENERGY CONSUMPTION: 1.1% STATUS 1 STARTUP 7/77	WINYAH 2 OF SOUTH CAROLINA PUBLIC SERVICE IS A PULVERIZED BITUMINOUS COAL (1.00% S, 11,500 BTU/LB) FIRED UNIT LOCATED IN GEORGETOWN, SOUTH CAROLINA. A COLD SIDE ESP AND A BABCOCK AND WILCOX VENTURI SCRUBBER/LIMESTONE TRAY TOWER ABSORBER TRAIN DESIGNED TO REMOVE 45% OF THE SO2 FROM THE BOILER FLUE GAS (50% GAS BYPASSES SCRUBBER) MAKE UP THE EMISSION CONTROL SYSTEM ON THIS UNIT. THE SYSTEM OPERATES IN AN OPEN WATER LOOP, THE SLUDGE IS DISPOSED IN AN UNLINED POND AND FLUE GAS EXITS A 400 FT STACK. OPERATIONS COMMENCED IN JULY 1977.
SOUTH CAROLINA PUBLIC SERVICE WINYAH 3 NEW 280 MW (GROSS) 280 MW (ESC) COAL 1.00 %S BITUMINOUS LIMESTONE BABCOCK & WILCOX ENERGY CONSUMPTION: 2.1% STATUS 1 STARTUP 7/80	WINYAH 3 OF SOUTH CAROLINA PUBLIC SERVICE IS A DRY BOTTOM BOILER WHICH FIRES 1.0% SULFUR COAL (11,500 BTU/LB) AND IS LOCATED IN GEORGETOWN, SOUTH CAROLINA. AN ESP PRECEDES A BABCOCK AND WILCOX LIMESTONE FGD SYSTEM AND AN INDIRECT STEAM REHEATER. THE SYSTEM OPERATES IN A CLOSED WATER LOOP MODE AND FLUE GAS EXITS A 400 FT STACK. OPERATIONS COMMENCED IN MAY 1980.
SOUTH CAROLINA PUBLIC SERVICE WINYAH 4 NEW 280 MW (GROSS) 280 MW (ESC) COAL 1.70 %S BITUMINOUS LIMESTONE AMERICAN AIR FILTER ENERGY CONSUMPTION: 2.1% STATUS 1 STARTUP 7/81	SOUTH CAROLINA PUBLIC SERVICE'S WINYAH 4 IS A BITUMINOUS COAL (1.70% S, 11,500 BTU/LB) FIRED UNIT LOCATED IN GEORGETOWN, SOUTH CAROLINA. TWO AMERICAN AIR FILTER LIMESTONE SLURRY SPRAY TOWERS FOLLOW AN ESP. THE TEMPERATURE OF THE CLEANED GAS IS RAISED BY AN INDIRECT STEAM REHEATER. THE SYSTEM OPERATES IN A CLOSED WATER LOOP MODE. INITIAL OPERATIONS COMMENCED IN JULY 1981.
SOUTH MISSISSIPPI ELEC PWR R.D. MORROW, SR. 1 NEW 200 MW (GROSS) 124 MW (ESC) COAL 1.64 %S BITUMINOUS LIMESTONE ENVIRONEERING, RILEY STOKER ENERGY CONSUMPTION: 2.5% STATUS 1 STARTUP 8/78	R.D. MORROW 1 OF SOUTHERN MISSISSIPPI ELEC. IS A PULVERIZED COAL (1.64% S, 12,250 BTU/LB) FIRED UNIT IN PURVIS, MISSISSIPPI. THE EMISSION CONTROL SYSTEM FOR THIS UNIT CONSISTS OF A HOT SIDE ESP FOLLOWED BY A LIMESTONE VENTRI-ROD ABSORBER SUPPLIED BY RILEY STOKER/ENVIRONEERING. AFTER THE CLEANED GAS PASSES THROUGH A VERTICAL CHEVRON MIST ELIMINATOR, IT IS JOINED BY A 38% BYPASS REHEAT BEFORE IT IS DISCHARGED THROUGH A 400 FOOT STACK SHARED BY UNITS 1 AND 2 (EACH UNIT HAS ITS OWN ACID BRICK LINED FLUE). THE WATER LOOP IS CLOSED, AND THE FLYASH STABILIZED SLUDGE IS HAULED BY TRUCK TO AN OFF-SITE LANDFILL. THE SYSTEM HAS BEEN OPERATIONAL SINCE AUGUST 1978.
SOUTH MISSISSIPPI ELEC PWR R.D. MORROW, SR. 2 NEW 200 MW (GROSS) 124 MW (ESC) COAL 1.64 %S BITUMINOUS LIMESTONE ENVIRONEERING, RILEY STOKER ENERGY CONSUMPTION: 2.5% STATUS 1 STARTUP 6/79	R.D. MORROW 2 OF SOUTHERN MISSISSIPPI ELEC. IS A PULVERIZED COAL (1.64% S, 12,250 BTU/LB) FIRED UNIT IN PURVIS, MISSISSIPPI. THE EMISSION CONTROL SYSTEM FOR THIS UNIT CONSISTS OF A HOT SIDE ESP FOLLOWED BY A LIMESTONE VENTRI-ROD ABSORBER SUPPLIED BY RILEY STOKER/ENVIRONEERING. AFTER THE CLEANED GAS PASSES THROUGH A VERTICAL CHEVRON MIST ELIMINATOR, IT IS JOINED BY A 38% BYPASS REHEAT BEFORE IT IS DISCHARGED THROUGH A 400 FOOT STACK SHARED BY UNITS 1 AND 2 (EACH UNIT HAS ITS OWN ACID BRICK LINED FLUE). THE WATER LOOP IS CLOSED, AND THE FLYASH STABILIZED SLUDGE IS HAULED BY TRUCK TO AN OFF-SITE LANDFILL. THE SYSTEM HAS BEEN OPERATIONAL SINCE JUNE 1979.
SOUTHERN ILLINOIS POWER MARION 4 NEW 184 MW (GROSS) 184 MW (ESC) COAL/REFUS 3.75 %S BITUMINOUS LIMESTONE BABCOCK & WILCOX ENERGY CONSUMPTION: 2.2% STATUS 1 STARTUP 4/79	UNIT 4 AT SOUTHERN ILLINOIS POWER COOP'S MARION STATION IN MARION, ILLINOIS IS A CYCLONE FIRED COAL (3.75% S, 11000 BTU/LB) UNIT WHICH IS SERVED BY A 89.4% EFFICIENT (DESIGN) LIMESTONE FGD SYSTEM SUPPLIED BY BABCOCK AND WILCOX. TWO SPRAY TOWERS AND A 400 FT BRICK LINED STACK ARE DOWNSTREAM OF AN ESP IN THIS SYSTEM. THE WATER LOOP IS CLOSED, AND THE FLYASH STABILIZED SLUDGE IS DEWATERED AND LANDFILLED. THE SYSTEM BECAME OPERATIONAL DURING APRIL 1979.

SECTION 2
STATUS OF FGD SYSTEMS

UNIT IDENTIFICATION	ABSTRACT
SOUTHERN INDIANA GAS & ELEC A.B. BROWN 1 NEW 265 MW (GROSS) 265 MW (ESC) COAL 3.35 %S BITUMINOUS DUAL ALKALI FMC ENERGY CONSUMPTION: .8% STATUS 1 STARTUP 3/79	SOUTHERN INDIANA GAS AND ELECTRIC'S A.B.BROWN 1 IS A DRY BOTTOM PULVERIZED COAL (3.35% S, 11,100 BTU/LB) FIRED UNIT IN WEST FRANKLIN, INDIANA. FMC SUPPLIED A DUAL ALKALI FGD SYSTEM DESIGNED TO REMOVE 85% OF THE FLUE GAS SO2. THE UNIT CONSISTS OF TWO THREE STAGE DISC CONTACTORS. A COLD SIDE ESP PROVIDES PRIMARY PARTICULATE CONTROL, AND ONE CHEVRON MIST ELIMINATOR/MODULE PRECEDES A 498 FOOT ACID BRICK LINED STACK. THE SYSTEM PRODUCES A FILTER CAKE WASTE PRODUCT WHICH IS DISPOSED IN AN ON-SITE LANDFILL. THE WATER LOOP CAN BE EITHER OPEN OR CLOSED. THE SYSTEM HAS BEEN OPERATIONAL SINCE MARCH 1979.
SOUTHERN INDIANA GAS & ELEC A.B. BROWN 2 NEW 265 MW (GROSS) 265 MW (ESC) COAL 3.35 %S BITUMINOUS DUAL ALKALI FMC ENERGY CONSUMPTION: .8% STATUS 2 STARTUP 1/85	SOUTHERN INDIANA GAS AND ELECTRIC HAS A NEW UNIT, A.B. BROWN 2, UNDER CONSTRUCTION IN WEST FRANKLIN, INDIANA. THE 265-MW (GROSS) UNIT SUPPLIED BY BABCOCK & WILCOX WILL FIRE BITUMINOUS COAL (3.35% S, 11,100 BTU/LB). A COLD SIDE ESP WILL PROVIDE PRIMARY PARTICULATE MATTER CONTROL AND A DUAL ALKALI FGD SYSTEM WITH A SO2 REMOVAL EFFICIENCY OF 90% WILL BE SUPPLIED BY FMC TO CONTROL EMISSIONS. THE FLUE GAS WILL EXIT THROUGH A 498-FOOT STACK. THE SYSTEM WILL OPERATE IN A CLOSED WATER LOOP MODE AND THE SLUDGE WILL BE DISPOSED IN AN ON-SITE LANDFILL. OPERATIONS ARE SCHEDULED TO COMMENCE IN JANUARY 1985.
SOUTHWESTERN ELECTRIC POWER DOLET HILLS 1 NEW 720 MW (GROSS) 720 MW (ESC) COAL .70 %S LIGNITE LIMESTONE AIR CORRECTION DIVISION, UOP ENERGY CONSUMPTION: ****% STATUS 2 STARTUP 12/85	DOLET HILLS 1 OF SOUTHWESTERN ELECTRIC POWER IS A 720 MW LIGNITE (0.7% S, 7100 BTU/LB) FIRED BOILER UNDER CONSTRUCTION IN MANSFIELD, LOUISIANA. THE EMISSION CONTROL SYSTEM WILL CONSIST OF AN ESP FOR PARTICULATE CONTROL AND A WET LIMESTONE FGD SYSTEM FOR SO2 CONTROL. THE FLUE GAS WILL EXIT THROUGH A 525 FOOT STACK AND THE SYSTEM WILL OPERRATE IN A CLOSED WATER LOOP MODE. INITIAL START-UP IS SCHEDULED FOR DECEMBER 1985 AND COMMERCIAL OPERATIONS ARE SCHEDULED FOR MARCH 1986.
SOUTHWESTERN ELECTRIC POWER HENRY W. PIRKEY 1 NEW 720 MW (GROSS) 720 MW (ESC) COAL .80 %S LIGNITE LIMESTONE AIR CORRECTION DIVISION, UOP ENERGY CONSUMPTION: ****% STATUS 2 STARTUP 12/84	HENRY W. PIRKEY 1 OF SOUTHWESTERN ELECTRIC POWER IS A WET BOTTOM LIGNITE (0.8% S, 6300 BTU/LB) FIRED UNIT UNDER CONSTRUCTION IN HALLSVILLE, TEXAS. A CONTRACT WAS AWARDED TO THE AIR CORRECTION DIVISION OF UOP FOR FOUR LIMESTONE SPRAY TOWERS (99+% EFFICIENCY) AND PARTICULATE WILL BE CONTROLLED WITH ESP'S. MIST ELIMINATION WILL BE PROVIDED BY TWO STAGE CHEVRONS AND THE 525 FT STACK WILL BE ACID BRICK LINED. NO REHEAT IS PLANNED. THE WATER LOOP WILL BE CLOSED AND THE SLUDGE WILL BE POZ-O-TEC FIXATED. START-UP IS EXPECTED BY DECEMBER 1984.
SOUTHWESTERN ELECTRIC POWER WALKER CO. 1 NEW 720 MW (GROSS) 720 MW (ESC) COAL 1.49 %S LIGNITE PROCESS NOT SELECTED VENDOR NOT SELECTED ENERGY CONSUMPTION: ****% STATUS 6 STARTUP 12/93	WALKER COUNTY 1 OF SOUTHWESTERN ELECTRIC POWER IS A PLANNED 720 MW (GROSS) LIGNITE (1.49% S) FIRED BOILER TO BE LOCATED IN HUNTSVILLE, TEXAS. THE UTILITY IS PRESENTLY CONSIDERING BOTH WET LIMESTONE AND DRY SCRUBBING AS THE POSSIBLE EMISSION CONTROL STRATEGY WITH A DESIGN SO2 REMOVAL EFFICIENC OF 90%. COMMERCIAL START-UP IS SCHEDULED FOR DECEMBER 1993.
SOUTHWESTERN ELECTRIC POWER WALKER CO. 2 NEW 720 MW (GROSS) 720 MW (ESC) COAL 1.49 %S LIGNITE PROCESS NOT SELECTED VENDOR NOT SELECTED ENERGY CONSUMPTION: ****% STATUS 6 STARTUP 12/93	WALKER COUNTY 2 OF SOUTHWESTERN ELECTRIC POWER IS A PLANNED 720 MW (GROSS) LIGNITE (1.49% S) FIRED BOILER TO BE LOCATED IN HUNTSVILLE, TEXAS. THE UTILITY IS PRESENTLY CONSIDERING BOTH WET LIMESTONE AND DRY SCRUBBING AS THE POSSIBLE EMISSION CONTROL STRATEGY WITH A DESIGN SO2 REMOVAL EFFICIENC OF 90%. COMMERCIAL START-UP IS SCHEDULED FOR DECEMBER 1993.

SECTION 2
STATUS OF FGD SYSTEMS

UNIT IDENTIFICATION	ABSTRACT
SOUTHWESTERN PUBLIC SERVICE SOUTH PLAINS 1 NEW 572 MW (GROSS) 572 MW (ESC) COAL ***** %S PROCESS NOT SELECTED VENDOR NOT SELECTED ENERGY CONSUMPTION: ****% STATUS 6 STARTUP 0/90	SOUTHWESTERN PUBLIC SERVICE HAS PLANS FOR A 572 MW (GROSS) UNIT, SOUTH PLAINS 1 TO BE LOCATED NEAR IDALOO TEXAS IN LUBOCK COUNTY. THE UNIT WILL BURN LOW SULFUR WESTERN COAL AND WILL UTILIZE AN FGD SYSTEM FOR CONTROL OF SO2 EMISSIONS. INITIAL START-UP IS SCHEDULED FOR 1990.
SPRINGFIELD CITY UTILITIES SOUTHWEST 1 NEW 194 MW (GROSS) 194 MW (ESC) COAL 3.50 %S BITUMINOUS LIMESTONE AIR CORRECTION DIVISION, UOP ENERGY CONSUMPTION: 4.6% STATUS 1 STARTUP 4/77	SPRINGFIELD CITY UTILITIES' SOUTHWEST 1 IS A PULVERIZED BITUMINOUS COAL (3.5% S, 11,000 BTU/LB) FIRED BOILER LOCATED IN SPRINGFIELD, MISSOURI. THE EMISSION CONTROL SYSTEM FOR THIS UNIT CONSISTS OF A COLD SIDE ESP FOLLOWED BY TWO UOP LIMESTONE TCA MODULES WHICH WERE DESIGNED TO REMOVE 80% OF THE FLUE GAS SO2. ONE CHEVRON/MODULE LEADS TO A 385 FOOT CEILCOTE LINED STACK. THE DRY FLYASH STABILIZED SLUDGE IS DEWATERED BY A ROTARY DRUM VACUUM FILTER AND TRUCKED TO A LANDFILL. THE SYSTEM OPERATES IN A CLOSED WATER LOOP MODE. OPERATIONS COMMENCED IN APRIL 1977.
SPRINGFIELD WATER, LIGHT & PWR DALLMAN 3 NEW 205 MW (GROSS) 205 MW (ESC) COAL 1 I50 3.05 %S BITUMINOUS; BITUMINO LIMESTONE RESEARCH-COTTRELL ENERGY CONSUMPTION: 4.9% STATUS 1 STARTUP 10/80	DALLMAN 3 OF SPRINGFIELD WATER, LIGHT, AND POWER IS A PULVERIZED COAL (3.05% S, 11,369 BTU/LB) FIRED BOILER LOCATED IN SPRINGFIELD, ILLINOIS. RESEARCH COTTRELL SUPPLIED A LIMESTONE FGD SYSTEM DESIGNED TO REMOVE 95% OF THE SO2 FROM 850,000 ACFM OF BOILER FLUE GAS. A HOT SIDE ESP PRECEDES TWO PACKED TOWER ABSORBERS, ONE HORIZONTAL CHEVRON PER MODULE, AND A 500 FOOT ACID BRICK LINED STACK. NO REHEAT IS PROVIDED. THE SYSTEM OPERATES IN A CLOSED WATER LOOP MODE AND SLUDGE IS DISPOSED OF IN A LANDFILL. FGD OPERATIONS COMMENCED IN OCTOBER 1980.
SUNFLOWER ELECTRIC HOLCOMB 1 NEW 347 MW (GROSS) 347 MW (ESC) COAL .34 %S SUBBITUMINOUS LIME/SPRAY DRYING JOY MFG/NIRO ATOMIZER ENERGY CONSUMPTION: .0% STATUS 1 STARTUP 7/83	SUNFLOWER ELECTRIC COOP'S HOLCOMB 1 STATION IS A 347 MW UNIT LOCATED IN HOLCOMB, KANSAS. THE PULVERIZED COAL (0.47% S, 8065 BTU/LB) FIRED BABCOCK AND WILCOX BOILER UTILIZES A JOY MANUFACTURING/NIRO ATOMIZER LIME/SPRAY DRYING PROCESS FOR SO2 CONTROL. A FABRIC FILTER IS UTILIZED FOR PRIMARY PARTICULATE CONTROL AND THE FLUE GAS EXITS A 475 FT STACK. INITIAL START-UP OF THE FGD SYSTEM COMMENCED IN JULY 1983.
TAMPA ELECTRIC BIG BEND 4 NEW 458 MW (GROSS) 458 MW (ESC) COAL 3.50 %S LIMESTONE RESEARCH-COTTRELL ENERGY CONSUMPTION: 3.5% STATUS 2 STARTUP 1/85	UNIT 4 AT TAMPA ELECTRIC'S BIG BEND STATION, LOCATED IN TAMPA, FLORIDA, IS A DRY BOTTOM PULVERIZED COAL (3.50% S, 10,495 BTU/LB) FIRED UNIT. RESEARCH-COTTRELL WILL SUPPLY A LIMESTONE SCRUBBING PROCESS. A COLD SIDE ESP AND MECHANICAL COLLECTORS WILL PROVIDE PARTICULATE CONTROL. THE FGD SYSTEM, PRESENTLY UNDER CONSTRUCTION, WILL REMOVE 90% OF THE FLUE GAS SO2, AND WILL INCLUDE AN INDIRECT HOT AIR REHEATER LEADING TO A 490 FOOT CONCRETE LINED STACK. THE SYSTEM WILL OPERATE IN AN OPEN WATER LOOP MODE AND WILL PRODUCE GYPSUM AS A SALEABLE PRODUCT. INITIAL START-UP IS SCHEDULED FOR JANUARY 1985.
TENNESSEE VALLEY AUTHORITY PARADISE 1 RETROFIT 704 MW (GROSS) 704 MW (ESC) COAL 3.20 %S BITUMINOUS LIMESTONE GE ENVIRONMENTAL SERVICES ENERGY CONSUMPTION: 2.6% STATUS 1 STARTUP 5/83	PARADISE 1 OF TVA IS A 3.2% SULFUR COAL FIRED UNIT LOCATED IN PARADISE, KENTUCKY. A CONTRACT WAS AWARDED TO GEESI FOR AN 84.2% EFFICIENT LIMESTONE FGD SYSTEM TO BE RETROFITTED ON THIS BOILER. THE FGD SYSTEM CONSISTS OF SIX VENTURI SCRUBBERS AND VENTURI ABSORBER TRAINS PRECEDED BY AN ESP. INLET FLUE GAS IS USED TO HEAT GLYCOL, WHICH IN TURN IS USED TO REHEAT THE OUTLET FLUE GAS. UNTREATED SLUDGE IS PUMPED DIRECTLY TO A POND FOR DISPOSAL. THE SYSTEM OPERATES IN A CLOSED WATER LOOP MODE AND FLUE GAS EXITS A 600 FT STACK. OPERATIONS COMMENCED IN MAY 1983.

SECTION 2
STATUS OF FGD SYSTEMS

UNIT IDENTIFICATION	ABSTRACT
TENNESSEE VALLEY AUTHORITY PARADISE 2 RETROFIT 704 MW (GROSS) 704 MW (ESC) COAL 3.20 %S BITUMINOUS LIMESTONE GE ENVIRONMENTAL SERVICES ENERGY CONSUMPTION: 2.6% STATUS 1 STARTUP 7/83	PARADISE 2 OF TVA IS A 3.2% S COAL FIRED LOCATED UNIT IN PARADISE, KENTUCKY. A CONTRACT WAS AWARDED TO GEESI FOR AN 84.2% EFFICIENT LIMESTONE FGD SYSTEM RETROFITTED ON THIS BOILER. SIX VENTURI SCRUBBERS AND VENTURI ABSORBER TRAINS FOLLOW AN ESP. INLET FLUE GAS IS USED TO HEAT GLYCOL, WHICH IN TURN IS USED TO REHEAT THE OUTLET FLUE GAS. UNTREATED SLUDGE IS PUMPED DIRECTLY TO A POND FOR DISPOSAL. THE SYSTEM OPERATES IN A CLOSED WATER LOOP MODE AND FLUE GAS EXITS A 600 FOOT STACK. OPERATIONS COMMENCED IN JULY 1983.
TENNESSEE VALLEY AUTHORITY WIDOWS CREEK 7 RETROFIT 575 MW (GROSS) 575 MW (ESC) COAL 3.70 %S BITUMINOUS LIMESTONE COMBUSTION ENGINEERING ENERGY CONSUMPTION: ****% STATUS 1 STARTUP 3/81	WIDOWS CREEK 7 IS A PULVERIZED BITUMINOUS COAL (3.7% S, 11,100 BTU/LB) FIRED BOILER OF TVA LOCATED IN BRIDGEPORT, ALABAMA. COMBUSTION ENGINEERING SUPPLIED A LIMESTONE VENTRI ROD SCRUBBER/SPRAY TOWER ABSORBER FGD SYSTEM ON THIS UNIT. AN ESP PRECEDES THE SCRUBBING TRAIN, AND A COMBINATION OF A BULK ENTRAINMENT SEPERATOR, TWO CHEVRON MIST ELIMINATORS AND A FINNED TUBE REHEATER FOLLOW THE SYSTEM. A FORCED OXIDATION SYSTEM IS EMPLOYED FOR SLUDGE TREATMENT. OPERATIONS COMMENCED IN MARCH 1981.
TENNESSEE VALLEY AUTHORITY WIDOWS CREEK 8 RETROFIT 550 MW (GROSS) 550 MW (ESC) COAL 3.30 %S BITUMINOUS LIMESTONE TENNESSEE VALLEY AUTHORITY ENERGY CONSUMPTION: 4.7% STATUS 1 STARTUP 5/77	WIDOWS CREEK 8 OF TVA IS A BALANCED DRAFT, TANGENTIALLY FIRED COAL (3.30% S, 11,810 BTU/LB) BOILER IN STEVENSON, ALABAMA. TVA RETROFITTED THIS UNIT WITH A LIMESTONE FGD SYSTEM (80% DESIGN SO2 REMOVAL EFFICIENCY) WHICH BEGAN OPERATIONS IN MAY 1977. AN ESP PRECEDES FOUR VARIABLE THROAT VENTURI SCRUBBER/MULTIGRID TOWER ABSORBER TRAINS (ONE OF THE TOWERS IS PACKED). ONE VERTICAL CHEVRON/TRAIN AND AN INDIRECT HOT AIR REHEATER ARE INCLUDED IN THE SYSTEM. THE SYSTEM OPERATES IN A CLOSED WATER LOOP AND FLUE GAS EXITS A 500 FT STACK. A FORCED OXIDATION SYSTEM IS EMPLOYED FOR SLUDGE TREATMENT.
TEXAS MUNICIPAL POWER AGENCY GIBBONS CREEK 1 NEW 443 MW (GROSS) 400 MW (ESC) COAL 1.06 %S LIGNITE LIMESTONE COMBUSTION ENGINEERING ENERGY CONSUMPTION: 1.4% STATUS 1 STARTUP 11/82	GIBBONS CREEK 1 OF THE TEXAS MUNICIPAL POWER AGENCY IS A DRY BOTTOM PULVERIZED LIGNITE (1.06% S, 4860 BTU/LB) FIRED UNIT LOCATED IN CARLOS, TEXAS. THE EMISSION CONTROL SYSTEM CONSISTS OF A COLD SIDE ESP FOLLOWED BY THREE 50% CAPACITY LIMESTONE SPRAY TOWERS. THE COMBUSTION ENGINEERING FGD SYSTEM INCLUDES A CHEVRON MIST ELIMINATOR AND A STEAM COIL REHEATER. CLEANED FLUE GAS IS DISCHARGED THROUGH A 465 FT ACID BRICK LINED STACK. THE WATER LOOP IS OPEN AND THE POZ-O-TTEC STABILIZED SLUDGE IS USED AS STRIP MINE LANDFILL. OPERATIONS COMMENCED IN NOVEMBER 1982.
TEXAS POWER & LIGHT SANDOW 4 NEW 545 MW (GROSS) 382 MW (ESC) COAL 1.60 %S LIGNITE LIMESTONE COMBUSTION ENGINEERING ENERGY CONSUMPTION: ****% STATUS 1 STARTUP 12/80	SANDOW 4 IS A PULVERIZED 1.6% SULFUR LIGNITE FIRED BOILER OF TEXAS POWER AND LIGHT LOCATED IN ROCKDALE, TEXAS. COMBUSTION ENGINEERING SUPPLIED THREE LIMESTONE SPRAY TOWERS FOR THIS UNIT. A COLD SIDE ESP PROVIDES PRIMARY PARTICULATE CONTROL. A 30% BYPASS IS EMPLOYED TO PROVIDE REHEAT, AND THE OVERALL SO2 REMOVAL EFFICIENCY IS 75%. THE SYSTEM OPERATES IN A CLOSED WATER LOOP, AND THE SLUDGE IS PONDED. OPERATIONS COMMENCED IN DECEMBER 1980.
TEXAS POWER & LIGHT TWIN OAKS 1 NEW 750 MW (GROSS) 750 MW (ESC) COAL .70 %S LIGNITE LIMESTONE GE ENVIRONMENTAL SERVICES ENERGY CONSUMPTION: ****% STATUS 3 STARTUP 8/89	TWIN OAKS 1 IS A 750 MW (GROSS) LIGNITE (.7% S) FIRED BOILER PLANNED BY TEXAS POWER AND LIGHT AND ALCOA FOR LOCATION IN BREMOND, TEXAS. A CONTRACT HAS BEEN AWARDED TO GE ENVIRONMENTAL SERVICES FOR A LIMESTONE FGD SYSTEM WITH A DESIGN SO2 REMOVAL EFFICIENCY OF 70%. ESP'S WILL CONTROL PARTICULATE MATTER AND THE SYSTEM WILL OPERATE IN A CLOSED WATER LOOP MODE. START-UP IS SCHEDULED FOR AUGUST 1989.

SECTION 2
STATUS OF FGD SYSTEMS

UNIT IDENTIFICATION	ABSTRACT
TEXAS POWER & LIGHT TWIN OAKS 2 NEW 750 MW (GROSS) 750 MW (ESC) COAL .70 %S LIGNITE LIMESTONE GE ENVIRONMENTAL SERVICES ENERGY CONSUMPTION: ****% STATUS 3 STARTUP 8/91	TWIN OAKS 1 IS A 750 MW (GROSS) LIGNITE (.7% S) FIRED BOILER PLANNED BY TEXAS POWER AND LIGHT AND ALCOA FOR LOCATION IN BREMOND, TEXAS. A CONTRACT HAS BEEN AWARDED TO GE ENVIRONMENTAL SERVICES FOR A LIMESTONE FGD SYSTEM WITH A DESIGN SO2 REMOVAL EFFICIENCY OF 70%. ESP'S WILL CONTROL PARTICULATE MATTER AND THE SYSTEM WILL OPERATE IN A CLOSED WATER LOOP MODE. START-UP IS SCHEDULED FOR AUGUST 1991.
TEXAS UTILITIES FOREST GROVE 1 NEW 750 MW (GROSS) 750 MW (ESC) COAL .80 %S LIGNITE LIMESTONE WHEELABRATOR AIR POLTN. CNTRL. ENERGY CONSUMPTION: ****% STATUS 3 STARTUP 0/88	TEXAS UTILITIES IS PLANNING A LIGNITE (0.8% S, 7000 BTU/LB) FIRED BOILER, FOREST GROVE 1, WHICH WILL BE LOCATED IN ATHENS, TEXAS. A CONTRACT HAS BEEN AWARDED TO WHEELABRATOR AIR POLLUTION CONTROL FOR A WET LIMESTONE FGD SYSTEM AT THIS UNIT. TWO ESP'S WILL PROVIDE PRIMARY PARTICULATE CONTROL AND NO STACK GAS REHEAT IS PLANNED. START-UP IS SCHEDULED FOR 1988.
TEXAS UTILITIES MARTIN LAKE 1 NEW 793 MW (GROSS) 595 MW (ESC) COAL .90 %S LIGNITE LIMESTONE RESEARCH-COTTRELL ENERGY CONSUMPTION: 1.3% STATUS 1 STARTUP 4/77	TEXAS UTILITIES' MARTIN LAKE 1 IS A LIGNITE (0.9% S, 7380 BTU/LB) FIRED BOILER IN TATUM, TEXAS. THIS UNIT IS EQUIPPED WITH AN EMISSION CONTROL SYSTEM WHICH INCLUDES A COLD SIDE ESP AND A LIMESTONE FGD SYSTEM, BOTH SUPPLIED BY RESEARCH COTTRELL. THE FGD SYSTEM CONSISTS OF SIX PACKED SPRAY TOWER ABSORBERS WHICH TREAT 75% OF THE TOTAL BOILER FLUE GAS. THE REMAINING FLUE GAS IS BYPASSED FOR REHEAT. THE TOTAL DESIGN SO2 REMOVAL EFFICIENCY IS 70.5%. TWO CHEVRONS/MODULE PROVIDE MIST ELIMINATION. THE FLUE GAS CLEANING WASTES ARE FLYASH STABILIZED AND DISPOSED IN AN ON-SITE LANDFILL. THE SYSTEM OPERATES IN A CLOSED WATER LOOP MODE AND FLUE GAS EXITS A 450 FT STACK. INITIAL OPERATIONS COMMENCED IN APRIL 1977.
TEXAS UTILITIES MARTIN LAKE 2 NEW 793 MW (GROSS) 595 MW (ESC) COAL .90 %S LIGNITE LIMESTONE RESEARCH-COTTRELL ENERGY CONSUMPTION: 1.3% STATUS 1 STARTUP 5/78	TEXAS UTILITIES' MARTIN LAKE 2 IS A LIGNITE (0.9% S, 7380 BTU/LB) FIRED BOILER IN TATUM, TEXAS. THIS UNIT IS EQUIPPED WITH AN EMISSION CONTROL SYSTEM WHICH INCLUDES A COLD SIDE ESP AND A LIMESTONE FGD SYSTEM, BOTH SUPPLIED BY RESEARCH COTTRELL. THE FGD SYSTEM CONSISTS OF SIX PACKED SPRAY TOWER ABSORBERS WHICH TREAT 75% OF THE TOTAL BOILER FLUE GAS. THE REMAINING FLUE GAS IS BYPASSED FOR REHEAT. THE TOTAL DESIGN SO2 REMOVAL EFFICIENCY IS 70.5%. TWO CHEVRONS/MODULE PROVIDE MIST ELIMINATION. THE FLUE GAS CLEANING WASTES ARE FLYASH STABILIZED AND DISPOSED IN AN ON-SITE LANDFILL. THE SYSTEM OPERATES IN A CLOSED WATER LOOP MODE AND FLUE GAS EXITS A 450 FT STACK. INITIAL OPERATIONS COMMENCED IN MAY 1978.
TEXAS UTILITIES MARTIN LAKE 3 NEW 793 MW (GROSS) 595 MW (ESC) COAL .90 %S LIGNITE LIMESTONE RESEARCH-COTTRELL ENERGY CONSUMPTION: 1.3% STATUS 1 STARTUP 2/79	TEXAS UTILITIES' MARTIN LAKE 3 IS A LIGNITE (0.9% S, 7380 BTU/LB) FIRED BOILER IN TATUM, TEXAS. THIS UNIT IS EQUIPPED WITH AN EMISSION CONTROL SYSTEM WHICH INCLUDES A COLD SIDE ESP AND A LIMESTONE FGD SYSTEM, BOTH SUPPLIED BY RESEARCH COTTRELL. THE FGD SYSTEM CONSISTS OF SIX PACKED SPRAY TOWER ABSORBERS WHICH TREAT 75% OF THE TOTAL BOILER FLUE GAS. THE REMAINING FLUE GAS IS BYPASSED FOR REHEAT. THE TOTAL DESIGN SO2 REMOVAL EFFICIENCY IS 70.5%. TWO CHEVRONS/MODULE PROVIDE MIST ELIMINATION. THE FLUE GAS CLEANING WASTES ARE FLYASH STABILIZED AND DISPOSED IN AN ON-SITE LANDFILL. THE SYSTEM OPERATES IN A CLOSED WATER LOOP MODE AND FLUE GAS EXITS A 450 FT STACK. INITIAL OPERATIONS COMMENCED IN FEBRUARY 1979.
TEXAS UTILITIES MARTIN LAKE 4 NEW 750 MW (GROSS) 750 MW (ESC) COAL .90 %S LIGNITE LIMESTONE RESEARCH-COTTRELL ENERGY CONSUMPTION: ****% STATUS 3 STARTUP 0/89	MARTIN LAKE 4 OF TEXAS UTILITIES IS A LIGNITE (0.9% S, 7380 BTU/LB) FIRED BOILER UNDER CONSTRUCTION IN TATUM, TEXAS. A CONTRACT FOR A LIMESTONE FGD SYSTEM FOR THIS UNIT HAS BEEN AWARDED TO RESEARCH COTTRELL. ESP'S WILL BE EMPLOYED FOR PARTICULATE CONTROL. FGD START-UP IS EXPECTED IN 1989.

SECTION 2
STATUS OF FGD SYSTEMS

UNIT IDENTIFICATION	ABSTRACT
TEXAS UTILITIES MONTICELLO 3 NEW 800 MW (GROSS) 800 MW (ESC) COAL .50 %S LIGNITE LIMESTONE GE ENVIRONMENTAL SERVICES ENERGY CONSUMPTION: ****% STATUS 1 STARTUP 5/78	MONTICELLO 3 OF TEXAS UTILITIES IS A LIGNITE (.5% S, 7000 BTU/LB) FIRED UNIT IN MT. PLEASANT, TEXAS. THIS UNIT'S EMISSION CONTROL SYSTEM CONSISTS OF TWO COLD SIDE ESP'S FOLLOWED BY THREE GEESI LIMESTONE SPRAY TOWERS (74% DESIGN SO2 REMOVAL EFFICIENCY), ONE HORIZONTAL CHEVRON MIST ELIMINATOR/MODULE, AND AN INDIRECT HOT AIR REHEATER. THE WATER LOOP IS CLOSED, AND THE FLYASH STABILIZED SLUDGE IS DISPOSED IN AN ON-SITE LANDFILL. THE CLEANED FLUE GAS FROM THIS UNIT EXITS A 600 FT STACK. INITIAL START-UP OCCURRED IN MAY 1978.
TUCSON ELECTRIC POWER SPRINGERVILLE 1 NEW 370 MW (GROSS) 370 MW (ESC) COAL .61 %S SUBBITUMINOUS LIME/SPRAY DRYING JOY MFG/NIRO ATOMIZER ENERGY CONSUMPTION: ****% STATUS 2 STARTUP 2/85	TUCSON ELECTRIC POWER WILL BE BUILDING TWO NEW UNITS IN SPRINGERVILLE, ARIZONA, SPRINGERVILLE 1 AND 2. THE UNITS WILL FIRE PULVERIZED SUBBITUMINOUS COAL (0.53-0.69% S AND 8500-8900 BTU/LB). A CONTRACT WAS AWARDED TO JOY MANUFACTURING/NIRO ATOMIZER FOR A LIME/SPRAY DRYING FGD SYSTEM TO CONTROL PARTICULATE MATTER AND SO2 EMISSIONS. THE SYSTEM WILL BE DESIGNED TO ACCOMODATE A REHEATER (SHOULD ONE BE REQUIRED) AND WILL OPERATE IN A CLOSED WATER LOOP. CLEANED FLUE GAS WILL EXIT THE SYSTEM VIA A 500 FOOT CONCRETE STACK. START-UP IS SCHEDULED FOR FEBRUARY 1985.
TUCSON ELECTRIC POWER SPRINGERVILLE 2 NEW 370 MW (GROSS) 370 MW (ESC) COAL .61 %S SUBBITUMINOUS LIME/SPRAY DRYING JOY MFG/NIRO ATOMIZER ENERGY CONSUMPTION: ****% STATUS 3 STARTUP 2/89	TUCSON GAS AND ELECTRIC WILL BE BUILDING TWO NEW UNITS IN SPRINGERVILLE, ARIZONA, SPRINGERVILLE 1 AND 2. THE UNITS WILL FIRE PULVERIZED SUBBITUMINOUS COAL (0.53-0.69% S AND 8500-8900 BTU/LB). A CONTRACT HAS BEEN AWARDED TO JOY MANUFACTURING/NIRO ATOMIZER FOR A LIME/SPRAY DRYING FGD SYSTEM TO CONTROL PARTICULATE MATTER AND SO2 EMISSIONS. THE SYSTEM WILL BE DESIGNED TO ACCOMODATE A REHEATER (SHOULD ONE BE REQUIRED) AND WILL OPERATE IN A CLOSED WATER LOOP. CLEANED FLUE GAS WILL EXIT THE SYSTEM VIA A 500 FOOT CONCRETE STACK. START-UP IS SCHEDULED FOR FEBRUARY 1989.
TUCSON ELECTRIC POWER SPRINGERVILLE 3 NEW 370 MW (GROSS) 370 MW (ESC) COAL .61 %S SUBBITUMINOUS PROCESS NOT SELECTED VENDOR NOT SELECTED ENERGY CONSUMPTION: ****% STATUS 6 STARTUP 0/91	TUCSON ELECTRIC POWER HAS PLANS FOR A NEW UNIT, SPRINGERVILLE 3, TO BE LOCATED IN SPRINGERVILLE, ARIZONA. THE PULVERIZED COAL (.53-.69% S, 8500-8900 BTU/LB) FIRED UNIT WILL HAVE A GROSS MEGAWATT RATING OF 370 AND WILL UTILIZE A FGD SYSTEM FOR CONTROL OF SO2 EMISSIONS. INITIAL START-UP IS SCHEDULED FOR 1991.
UNITED POWER ASSOCIATION STANTON 1A NEW 60 MW (GROSS) 50 MW (ESC) COAL .77 %S LIGNITE LIME/SPRAY DRYING RESEARCH-COTTRELL ENERGY CONSUMPTION: ****% STATUS 1 STARTUP 7/82	STANTON 1A OF THE UNITED POWER ASSOCIATION IS A PULVERIZED COAL (0.77% S, 7000 BTU/LB) FIRED UNIT LOCATED IN STANTON, NORTH DAKOTA. THE LIME/SPRAY DRYING SYSTEM, SUPPLIED BY RESEARCH-COTTRELL, CONSISTS OF A SPRAY DRYER FOLLOWED BY A FABRIC FILTER FOR SO2 & PARTICULATE REMOVAL. KOMLINE AND SANDERSON, THE SUBCONTRACTOR TO RESEARCH-COTTRELL, SUPPLIED THE ROTARY ATOMIZER AND ASSOCIATED EQUIPMENT FOR THE REACTOR VESSEL. THE SYSTEM OPERATES IN AN OPEN LOOP MODE WITH SLUDGE DISPOSED IN A CLAY LINED SETTLING POND. THE CLEANED FLUE GAS EXITS A 254 FT STACK. OPERATIONS COMMENCED IN JULY 1982.
UTAH POWER & LIGHT HUNTER 1 NEW 420 MW (GROSS) 360 MW (ESC) COAL .52 %S BITUMINOUS LIME GE ENVIRONMENTAL SERVICES ENERGY CONSUMPTION: 1.7% STATUS 1 STARTUP 3/79	HUNTER 1 OF UTAH POWER AND LIGHT IS A COAL (0.52% S, 11,500 BTU/LB) FIRED UNIT IN CASTLEDALE, UTAH. GEESI SUPPLIED A PEBBLE LIME WET SCRUBBING SYSTEM WHICH BECAME OPERATIONAL IN MARCH 1979. THE SYSTEM IS DESIGNED TO OPERATE IN AN OPEN WATER LOOP WITH AN SO2 REMOVAL EFFICIENCY OF 80%. PRIMARY PARTICULATE CONTROL IS PROVIDED BY AN UPSTREAM ESP, AND STACK GAS REHEAT IS PROVIDED BY BYPASS. THE CLEANED FLUE GAS EXITS A 600 FT STACK. THE SLUDGE IS FLYASH STABILIZED AND DISPOSED ON-SITE.

SECTION 2
STATUS OF FGD SYSTEMS

UNIT IDENTIFICATION	ABSTRACT
UTAH POWER & LIGHT HUNTER 2 NEW 420 MW (GROSS) 360 MW (ESC) COAL .52 %S BITUMINOUS LIME GE ENVIRONMENTAL SERVICES ENERGY CONSUMPTION: 1.7% STATUS 1 STARTUP 6/80	UTAH POWER AND LIGHT'S HUNTER 2 IS A COAL (0.52% S, 11,500 BTU/LB) FIRED UNIT LOCATED IN CASTLEDALE, UTAH. FOR EMISSION CONTROL, GEESI SUPPLIED A PEBBLE LIME WET SCRUBBING SYSTEM DESIGNED TO OPERATE IN AN OPEN WATER LOOP WITH AN SO2 REMOVAL EFFICIENCY OF 80%. AN UPSTREAM ESP PROVIDES PRIMARY PARTICLE CONTROL, AND A BYPASS SYSTEM PROVIDES STACK GAS REHEAT. THE SLUDGE IS FLYASH STABILIZED AND DISPOSED OF ON-SITE. START-UP OF BOTH THE BOILER AND FGD SYSTEM TOOK PLACE IN JUNE 1980.
UTAH POWER & LIGHT HUNTER 3 NEW 400 MW (GROSS) 400 MW (ESC) COAL .55 %S BITUMINOUS LIMESTONE GE ENVIRONMENTAL SERVICES ENERGY CONSUMPTION: ****% STATUS 1 STARTUP 4/83	HUNTER 3 OF UTAH POWER AND LIGHT IS A PULVERIZED COAL (0.55% S, 12500 BTU/LB) FIRED UNIT LOCATED IN CASTLE DALE, UTAH. A LIMESTONE NONREGENERABLE FGD UNIT WAS SUPPLIED BY GEESI FOR SO2 CONTROL AND ESP'S ARE EMPLOYED FOR PARTICULATE REMOVAL. THE SYSTEM OPERATES IN A CLOSED WATER LOOP MODE AND FLUE GAS EXITS A 600 FT STACK. INITIAL OPERATIONS COMMENCED IN APRIL 1983.
UTAH POWER & LIGHT HUNTINGTON 1 NEW 432 MW (GROSS) 366 MW (ESC) COAL .43 %S BITUMINOUS LIME GE ENVIRONMENTAL SERVICES ENERGY CONSUMPTION: 1.6% STATUS 1 STARTUP 5/78	HUNTINGTON 1 OF UTAH POWER IS A TANGENTIALLY FIRED PULVERIZED COAL (0.43% S, 11,650 BTU/LB) BOILER IN HUNTINGTON, UTAH. A COLD SIDE ESP TREATS 1,742,000 ACFM OF FLUE GAS AND IS FOLLOWED BY A GEESI LIME FGD SYSTEM CONSISTING OF FOUR SPRAY TOWERS (80% DESIGN EFFICIENCY). ONE FOUR PASS CHEVRON/MODULE PROVIDES MIST ELIMINATION, AND A COMBINATION OF A STEAM TUBE AND 10-20% BYPASS REHEATERS BOOST THE GAS TEMPERATURE 45-50 DEG F. THE SYSTEM OPERATES IN A CLOSED WATER LOOP, AND THE FLYASH STABILIZED SLUDGE IS TRUCKED TO AN ON-SITE LANDFILL. THE SYSTEM INCLUDES A 600 FOOT ACID BRICK LINED STACK, AND HAS BEEN OPERATIONAL SINCE MAY 1978.
UTAH POWER & LIGHT NAUGHTON 3 RETROFIT 330 MW (GROSS) 330 MW (ESC) COAL .55 %S SUBBITUMINOUS SODIUM CARBONATE AIR CORRECTION DIVISION, UOP ENERGY CONSUMPTION: 1.5% STATUS 1 STARTUP 9/81	NAUGHTON 3 OF UTAH POWER AND LIGHT IS A PULVERIZED COAL (.55% S, 9500 BTU/LB) FIRED BOILER LOCATED IN KEMMERER, WYOMING. THE BOILER SUPPLIES 1,500,000 ACFM OF FLUE GAS TO AN ESP FOR PARTICULATE MATTER CONTROL. THE UNIT WAS RETROFITTED WITH A UOP WET SODA ASH FGD SYSTEM FOR SO2 CONTROL. THE FGD SYSTEM IS DESIGNED TO REMOVE 70% OF THE SO2 BEFORE THE FLUE GAS EXITS OUT A 475 FOOT STACK. INITIAL START-UP TOOK PLACE IN SEPTEMBER 1981.
WASHINGTON WATER POWER CRESTON COAL 1 NEW 570 MW (GROSS) 570 MW (ESC) COAL ***** %S UNKNOWN LIMESTONE VENDOR NOT SELECTED ENERGY CONSUMPTION: ****% STATUS 6 STARTUP 0/95	WASHINGTON WATER POWER HAS PLANS FOR A NEW UNIT, CRESTON COAL 1, TO BE LOCATED IN CRESTON, WASHINGTON. THE COAL FIRED BOILER WILL HAVE A GROSS GENERATING CAPACITY OF 570 MW AND WILL UTILIZE A WET LIMESTONE FGD SYSTEM FOR CONTROL OF SO2 EMISSIONS. FGD OPERATIONS ARE SCHEDULED TO COMMENCE IN 1995.
WASHINGTON WATER POWER CRESTON COAL 2 NEW 570 MW (GROSS) 570 MW (ESC) COAL ***** %S UNKNOWN LIMESTONE VENDOR NOT SELECTED ENERGY CONSUMPTION: ****% STATUS 6 STARTUP 0/97	WASHINGTON WATER POWER HAS PLANS FOR A NEW UNIT, CRESTON 2, TO BE LOCATED IN CRESTON, WASHINGTON. THE COAL FIRED BOILER WILL HAVE A GROSS GENERATING CAPACITY OF 570 MW AND WILL USE A WET LIMESTONE FGD SYSTEM FOR CONTROL OF SO2 EMISSIONS. FGD OPERATIONS ARE SCHEDULED TO COMMENCE IN 1997.

SECTION 2
STATUS OF FGD SYSTEMS

UNIT IDENTIFICATION	ABSTRACT
WASHINGTON WATER POWER CRESTON COAL 3 NEW 570 MW (GROSS) 570 MW (ESC) COAL ***** %S UNKNOWN LIMESTONE VENDOR NOT SELECTED ENERGY CONSUMPTION: 12.3% STATUS 6 STARTUP 0/98	WASHINGTON WATER POWER HAS PLANS FOR A NEW UNIT, CRESTON 3, TO BE LOCATED IN CRESTON, WASHINGTON. THE COAL FIRED BOILER WILL HAVE A GROSS GENERATING CAPACITY OF 570 MW AND WILL USE A WET LIMESTONE FGD SYSTEM FOR CONTROL OF SO2 EMISSIONS. FGD OPERATIONS ARE SCHEDULED TO COMMENCE IN 1998.
WASHINGTON WATER POWER CRESTON COAL 4 NEW 570 MW (GROSS) 570 MW (ESC) COAL ***** %S UNKNOWN LIMESTONE VENDOR NOT SELECTED ENERGY CONSUMPTION: 12.3% STATUS 6 STARTUP 0/99	WASHINGTON WATER POWER HAS PLANS FOR A NEW UNIT, CRESTON 4, TO BE LOCATED IN CRESTON, WASHINGTON. THE COAL FIRED BOILER WILL HAVE A GROSS GENERATING CAPACITY OF 570 MW AND WILL USE A WET LIMESTONE FGD SYSTEM FOR CONTROL OF SO2 EMISSIONS. FGD OPERATIONS ARE SCHEDULED TO COMMENCE IN 1999.
WEST PENN POWER MITCHELL 33 RETROFIT 300 MW (GROSS) 300 MW (ESC) COAL 2.80 %S BITUMINOUS LIME GE ENVIRONMENTAL SERVICES ENERGY CONSUMPTION: 1.0% STATUS 1 STARTUP 8/82	UNIT 33 AT ALLEGHENY POWER SYSTEM'S MITCHELL POWER STATION IN COURTNEY, PENNSYLVANIA IS A COAL (2.8% S, 12,520 BTU/LB) FIRED BOILER. GEESI HAS INSTALLED A LIME SCRUBBING PROCESS WITH AN SO2 REMOVAL EFFICIENCY OF 95%. PARTICULATE MATTER IS CONTROLLED WITH ESP'S. OPERATIONS COMMENCED IN AUGUST 1982.
WEST TEXAS UTILITIES OKLAUNION 1 NEW 720 MW (GROSS) 504 MW (ESC) COAL .34 %S SUBBITUMINOUS LIMESTONE GE ENVIRONMENTAL SERVICES ENERGY CONSUMPTION: .0% STATUS 2 STARTUP 9/86	WEST TEXAS UTILITIES HAS STARTED CONSTRUCTION ON A PULVERIZED SUBBITUMINOUS COAL (.34% S, 8227 BTU/LB) FIRED BOILER LOCATED NEAR OKLAUNION, TEXAS. THE FOSTER WHEELER BOILER WILL SUPPLY 2,382,679 ACFM OF FLUE GAS TO A WET LIMESTONE FGD SYSTEM SUPPLIED BY GE ENVIRONMENTAL SYSTEMS FOR CONTROL OF SO2 EMISSIONS (70% DESIGN REMOVAL EFFICIENCY). LODGE-COTTRELL WILL SUPPLY A RIGID FRAME COLD SIDE ESP FOR PARTICULATE CONTROL. THE SYSTEM WILL OPERATE IN A CLOSED WATER LOOP MODE AND FLUE GAS WILL EXIT THROUGH A 453 FT ACID BRICK LINED STACK. INITIAL OPERATIONS ARE SCHEDULED FOR SEPTEMBER 1986.
WEST TEXAS UTILITIES OKLAUNION 2 NEW 720 MW (GROSS) 504 MW (ESC) COAL .34 %S SUBBITUMINOUS PROCESS NOT SELECTED VENDOR NOT SELECTED ENERGY CONSUMPTION: .0% STATUS 6 STARTUP 0/96	WEST TEXAS UTILITIES HAS PLANS TO BUILD A SECOND COAL (.34% S, 8227 BTU/LB) FIRED BOILER TO BE LOCATED NEAR OKLAUNION, TEXAS. THE UTILITY WILL INCLUDE AN FGD SYSTEM FOR SO2 CONTROL FROM THE 720 MW UNIT. LODGE-COTTRELL WILL SUPPLY A RIGID FRAME COLD SIDE ESP FOR CONTROL OF PARTICULATE MATTER. THE SYSTEM WILL OPERATE IN A CLOSED WATER LOOP MODE. UNIT 2 IS SCHEDULED TO COMMENCE OPERATIONS IN 1996.
WHITE PINE COUNTY WHITE PINE PWR PROJ. 1 NEW 820 MW (GROSS) 820 MW (ESC) COAL .60 %S PROCESS NOT SELECTED VENDOR NOT SELECTED ENERGY CONSUMPTION: ****% STATUS 6 STARTUP 3/91	WHITE PINE COUNTY HAS PLANS FOR TWO NEW UNITS, WHITE PINE POWER PROJECT 1 AND 2, TO BE LOCATED NEAR ELY NEVADA. THE PULVERIZED COAL (10,530 BTU/LB, 0.6% S) FIRED UNITS WILL HAVE A GROSS MEGAWATT RATING OF 820 EACH AND WILL UTILIZE A SPRAY DRYING FGD SYSTEM FOR CONTROL OF SO2 EMISSIONS. FABRIC FILTERS WILL BE EMPLOYED FOR PARTICULATE CONTROL. UNITS 1 AND 2 ARE SCHEDULED TO COMMENCE OPERATIONS IN 1991 AND 1992 RESPECTIVELY.

SECTION 2
STATUS OF FGD SYSTEMS

UNIT IDENTIFICATION	ABSTRACT
WHITE PINE COUNTY WHITE PINE PWR PROJ. 2 NEW 820 MW (GROSS) 820 MW (ESC) COAL .60 %S PROCESS NOT SELECTED VENDOR NOT SELECTED ENERGY CONSUMPTION: ****% STATUS 6 STARTUP 3/92	WHITE PINE COUNTY HAS PLANS FOR TWO NEW UNITS, WHITE PINE POWER PROJECT 1 AND 2 TO BE LOCATED NEAR ELY NEVADA. THE PULVERIZED COAL (10,530 BTU/LB, 0.6% S) FIRED UNITS WILL HAVE A GROSS MEGAWATT RATING OF 820 EACH AND WILL UTILIZE A SPRAY DRYING FGD SYSTEM FOR CONTROL OF SO2 EMISSIONS. FABRIC FILTERS WILL BE EMPLOYED FOR PARTICULATE CONTROL. UNITS 1 AND 2 ARE SCHEDULED TO COMMENCE OPERATIONS IN 1991 AND 1992 RESPECTIVELY.

SECTION 3
SUMMARY OF FGD SYSTEMS BY COMPANY

COMPANY NAME	TOTAL		STATUS							
			OPERATIONAL		CONSTRUCTION		CONTRACT AWARDED		PLANNED	
	NO.	MW	NO.	MW	NO.	MW	NO.	MW	NO.	MW
ALABAMA ELECTRIC	2	358.	2	358.	0	0.	0	0.	0	0.
ARIZONA ELECTRIC POWER	2	196.	2	196.	0	0.	0	0.	0	0.
ARIZONA PUBLIC SERVICE	9	2761.	6	1145.	2	1490.	0	0.	1	126.
ASSOCIATED ELECTRIC	1	670.	1	670.	0	0.	0	0.	0	0.
ATLANTIC CITY ELECTRIC	1	330.	0	0.	0	0.	0	0.	1	330.
BASIN ELECTRIC POWER	6	3150.	4	2150.	1	440.	0	0.	1	560.
BIG RIVERS ELECTRIC	3	924.	3	924.	0	0.	0	0.	0	0.
BOSTON EDISON	2	776.	0	0.	0	0.	0	0.	2	776.
CAJUN ELECTRIC POWER	1	540.	0	0.	0	0.	1	540.	0	0.
CENTRAL ILLINOIS LIGHT	1	416.	1	416.	0	0.	0	0.	0	0.
CENTRAL ILLINOIS PUBLIC SERV	1	617.	1	617.	0	0.	0	0.	0	0.
CENTRAL MAINE POWER	1	600.	0	0.	0	0.	0	0.	1	600.
CENTRAL POWER & LIGHT	1	720.	0	0.	0	0.	1	720.	0	0.
CINCINNATI GAS & ELECTRIC	3	2686.	1	650.	0	0.	0	0.	2	2036.
COLORADO UTE ELECTRIC	3	1357.	3	1357.	0	0.	0	0.	0	0.
COLUMBUS & SOUTHERN OHIO ELEC	2	700.	2	700.	0	0.	0	0.	0	0.
COOPERATIVE POWER	1	750.	0	0.	0	0.	0	0.	1	750.
COOPERATIVE POWER ASSOCIATION	2	654.	2	654.	0	0.	0	0.	0	0.
DELMARVA POWER & LIGHT	4	730.	3	180.	0	0.	0	0.	1	550.
DESERET GEN & TRANS	2	820.	1	410.	0	0.	0	0.	1	410.
DUQUESNE LIGHT	2	918.	2	918.	0	0.	0	0.	0	0.
EAST KENTUCKY POWER	2	1150.	1	500.	0	0.	1	650.	0	0.
FLORIDA POWER & LIGHT	2	1600.	0	0.	0	0.	0	0.	2	1600.
GENERAL PUBLIC UTILITIES	2	1380.	0	0.	0	0.	0	0.	2	1380.
GRAND HAVEN BRD OF LIGHT & PWR	1	65.	1	65.	0	0.	0	0.	0	0.
GRAND RIVER DAM AUTHORITY	1	520.	0	0.	1	520.	0	0.	0	0.
HOOSIER ENERGY	2	882.	2	882.	0	0.	0	0.	0	0.
HOUSTON LIGHTING & POWER	5	3372.	1	492.	2	1500.	2	1380.	0	0.
INDIANAPOLIS POWER & LIGHT	5	3012.	1	532.	1	530.	0	0.	3	1950.
IOWA ELECTRIC LIGHT & PWR	1	720.	0	0.	0	0.	0	0.	1	720.
JACKSONVILLE ELEC AUTHORITY	2	1224.	0	0.	2	1224.	0	0.	0	0.
KANSAS CITY POWER & LIGHT	1	874.	1	874.	0	0.	0	0.	0	0.
KANSAS POWER & LIGHT	5	2165.	5	2165.	0	0.	0	0.	0	0.
KENTUCKY UTILITIES	3	1365.	1	65.	0	0.	1	650.	1	650.
LAKELAND UTILITIES	1	364.	1	364.	0	0.	0	0.	0	0.
LOS ANGELES DEPT OF WTR & PWR	2	1640.	0	0.	2	1640.	0	0.	0	0.
LOUISVILLE GAS & ELECTRIC	10	3539.	8	2389.	0	0.	0	0.	2	1150.
LOWER COLORADO RIVER AUTH	2	902.	0	0.	1	451.	0	0.	1	451.
MARQUETTE BOARD OF LIGHT & PWR	1	44.	1	44.	0	0.	0	0.	0	0.
MICHIGAN SO CENTRAL PWR AGENCY	1	55.	1	55.	0	0.	0	0.	0	0.
MIDDLE SOUTH UTILITIES	2	1780.	0	0.	0	0.	0	0.	2	1780.
MINNESOTA POWER & LIGHT	1	475.	1	475.	0	0.	0	0.	0	0.
MINNKOTA POWER	1	374.	1	374.	0	0.	0	0.	0	0.
MONONGAHELA POWER	2	1252.	2	1252.	0	0.	0	0.	0	0.
MONTANA POWER	4	2276.	3	1498.	1	778.	0	0.	0	0.
MONTANA-DAKOTA UTILITIES	1	440.	1	440.	0	0.	0	0.	0	0.
MUSCATINE POWER & WATER	1	166.	1	166.	0	0.	0	0.	0	0.
NEBRASKA PUBLIC POWER DISTRICT	1	650.	0	0.	0	0.	0	0.	1	650.
NEVADA POWER	8	2625.	4	625.	0	0.	0	0.	4	2000.
NEW YORK STATE ELEC & GAS	1	625.	1	625.	0	0.	0	0.	0	0.
NIAGARA MOHAWK POWER	1	100.	1	100.	0	0.	0	0.	0	0.
NORTHERN INDIANA PUB SERVICE	2	782.	1	391.	1	391.	0	0.	0	0.
NORTHERN STATES POWER	4	2420.	3	1610.	1	810.	0	0.	0	0.
ORLANDO UTILITIES COMMISSION	1	465.	0	0.	1	465.	0	0.	0	0.
PACIFIC POWER & LIGHT	5	2530.	1	550.	1	550.	3	1430.	0	0.
PENNSYLVANIA POWER	3	2751.	3	2751.	0	0.	0	0.	0	0.
PHILADELPHIA ELECTRIC	3	724.	3	724.	0	0.	0	0.	0	0.
PLAINS ELECTRIC G & T	1	233.	0	0.	1	233.	0	0.	0	0.
PLATTE RIVER POWER AUTHORITY	1	279.	1	279.	0	0.	0	0.	0	0.
PUBLIC SERVICE INDIANA	1	670.	1	670.	0	0.	0	0.	0	0.

NOTE - PLANNED STATUS INCLUDES LETTER OF INTENT SIGNED, REQUESTING/EVALUATING BIDS, AND CONSIDERING ONLY FGD SYSTEMS

SECTION 3
SUMMARY OF FGD SYSTEMS BY COMPANY

COMPANY NAME	TOTAL		STATUS: OPERATIONAL		CONSTRUCTION		CONTRACT AWARDED		PLANNED	
	NO.	MW	NO.	MW	NO.	MW	NO.	MW	NO.	MW
PUBLIC SERVICE OF NEW MEXICO	5	2279.	4	1779.	0	0.	0	0.	1	500.
PUB. SER. CO. OF COLORADO	1	500.	0	0.	0	0.	0	0.	1	500.
SALT RIVER PROJECT	3	920.	2	640.	0	0.	0	0.	1	280.
SAN ANTONIO PUBLIC SERVICE	4	2000.	0	0.	0	0.	0	0.	4	2000.
SAN MIGUEL ELECTRIC	1	400.	1	400.	0	0.	0	0.	0	0.
SEMINOLE ELECTRIC	4	2480.	2	1240.	0	0.	0	0.	2	1240.
SIERRA PACIFIC POWER	4	1776.	0	0.	1	276.	0	0.	3	1500.
SIKESTON BRD OF MUNICIPAL UTIL	1	235.	1	235.	0	0.	0	0.	0	0.
SOUTH CAROLINA PUBLIC SERVICE	5	1600.	4	1150.	0	0.	1	450.	0	0.
SOUTH MISSISSIPPI ELEC PWR	2	248.	2	248.	0	0.	0	0.	0	0.
SOUTHERN ILLINOIS POWER	1	184.	1	184.	0	0.	0	0.	0	0.
SOUTHERN INDIANA GAS & ELEC	2	530.	1	265.	1	265.	0	0.	0	0.
SOUTHWESTERN ELECTRIC POWER	4	2880.	0	0.	2	1440.	0	0.	2	1440.
SOUTHWESTERN PUBLIC SERVICE	1	572.	0	0.	0	0.	0	0.	1	572.
SPRINGFIELD CITY UTILITIES	1	194.	1	194.	0	0.	0	0.	0	0.
SPRINGFIELD WATER, LIGHT & PWR	1	205.	1	205.	0	0.	0	0.	0	0.
SUNFLOWER ELECTRIC	1	347.	1	347.	0	0.	0	0.	0	0.
TAMPA ELECTRIC	1	458.	0	0.	1	458.	0	0.	0	0.
TENNESSEE VALLEY AUTHORITY	4	2533.	4	2533.	0	0.	0	0.	0	0.
TEXAS MUNICIPAL POWER AGENCY	1	400.	1	400.	0	0.	0	0.	0	0.
TEXAS POWER & LIGHT	3	1882.	1	382.	0	0.	2	1500.	0	0.
TEXAS UTILITIES	6	4085.	4	2585.	0	0.	2	1500.	0	0.
TUCSON ELECTRIC POWER	3	1110.	0	0.	1	370.	1	370.	1	370.
UNITED POWER ASSOCIATION	1	50.	1	50.	0	0.	0	0.	0	0.
UTAH POWER & LIGHT	5	1816.	5	1816.	0	0.	0	0.	0	0.
WASHINGTON WATER POWER	4	2280.	0	0.	0	0.	0	0.	4	2280.
WEST PENN POWER	1	300.	1	300.	0	0.	0	0.	0	0.
WEST TEXAS UTILITIES	2	1008.	0	0.	1	504.	0	0.	1	504.
WHITE PINE COUNTY	2	1640.	0	0.	0	0.	0	0.	2	1640.
TOTALS	217	102075.	124	47255.	25	14335.	15	9190.	53	31295.

NOTE - PLANNED STATUS INCLUDES LETTER OF INTENT SIGNED, REQUESTING/EVALUATING BIDS, AND CONSIDERING ONLY FGD SYSTEMS

SECTION 4
SUMMARY OF FGD SYSTEMS BY SYSTEM SUPPLIER

SYSTEM SUPPLIER/PROCESS	TOTAL NO.	TOTAL MW	STATUS: OPERATIONAL NO.	OPERATIONAL MW	CONSTRUCTION NO.	CONSTRUCTION MW	CONTRACT AWARDED NO.	CONTRACT AWARDED MW
AIR CORRECTION DIVISION, UOP								
LIME	2	700.	2	700.	0	0.	0	0.
LIMESTONE	4	2166.	2	726.	2	1440.	0	0.
SODIUM CARBONATE	2	880.	2	880.	0	0.	0	0.
TOTAL -	8	3746.	6	2306.	2	1440.	0	0.
AMERICAN AIR FILTER								
LIME	6	1659.	6	1659.	0	0.	0	0.
LIMESTONE	1	280.	1	280.	0	0.	0	0.
TOTAL -	7	1939.	7	1939.	0	0.	0	0.
BABCOCK & WILCOX								
LIME	7	4107.	4	1967.	2	1490.	1	650.
LIMESTONE	9	3182.	8	2532.	0	0.	1	650.
LIME/SPRAY DRYING	2	1017.	2	1017.	0	0.	0	0.
SODIUM CARBONATE	3	1650.	0	0.	1	550.	2	1100.
TOTAL -	21	9956.	14	5516.	3	2040.	4	2400.
BECHTEL/MONTANA POWER								
LIME/ALKALINE FLYASH	2	1556.	1	778.	1	778.	0	0.
TOTAL -	2	1556.	1	778.	1	778.	0	0.
COMBUSTION ENGINEERING								
LIME	4	980.	4	980.	0	0.	0	0.
LIMESTONE	14	6581.	9	3932.	5	2649.	0	0.
LIMESTONE/ALKALINE FLYASH	2	1500.	2	1500.	0	0.	0	0.
LIME/ALKALINE FLYASH	2	654.	2	654.	0	0.	0	0.
TOTAL -	22	9715.	17	7066.	5	2649.	0	0.
DAVY MCKEE								
WELLMAN LORD	7	1959.	7	1959.	0	0.	0	0.
TOTAL -	7	1959.	7	1959.	0	0.	0	0.
ENVIRONEERING, RILEY STOKER								
LIMESTONE	3	664.	3	664.	0	0.	0	0.
TOTAL -	3	664.	3	664.	0	0.	0	0.
FLAKT								
LIME/SPRAY DRYING	1	520.	0	0.	1	520.	0	0.
TOTAL -	1	520.	0	0.	1	520.	0	0.
FMC								
DUAL ALKALI	4	1312.	2	656.	2	656.	0	0.
TOTAL -	4	1312.	2	656.	2	656.	0	0.
GE ENVIRONMENTAL SERVICES								
DUAL ALKALI	1	617.	1	617.	0	0.	0	0.
LIME	8	4138.	8	4138.	0	0.	0	0.
LIMESTONE	12	8124.	5	3100.	3	2144.	4	2880.
LIME/ALKALINE FLYASH	3	615.	3	615.	0	0.	0	0.
LIME/SPRAY DRYING	1	44.	1	44.	0	0.	0	0.
TOTAL -	25	13538.	18	8514.	3	2144.	4	2880.
JOY MFG/NIRO ATOMIZER								
LIME/SPRAY DRYING	10	4426.	4	1176.	3	1620.	3	1630.
TOTAL -	10	4426.	4	1176.	3	1620.	3	1630.

SECTION 4
SUMMARY OF FGD SYSTEMS BY SYSTEM SUPPLIER

SYSTEM SUPPLIER/PROCESS	TOTAL NO.	TOTAL MW	STATUS: OPERATIONAL NO.	OPERATIONAL MW	CONSTRUCTION NO.	CONSTRUCTION MW	CONTRACT AWARDED NO.	CONTRACT AWARDED MW
JOY/NIRO								
LIME/SPRAY DRYING	1	330.	0	0.	0	0.	1	330.
TOTAL -	1	330.	0	0.	0	0.	1	330.
MITSUBISHI HEAVY INDUSTRIES								
LIMESTONE	2	882.	2	882.	0	0.	0	0.
TOTAL -	2	882.	2	882.	0	0.	0	0.
M.W. KELLOGG								
LIME	2	1357.	2	1357.	0	0.	0	0.
LIMESTONE	4	1980.	4	1980.	0	0.	0	0.
TOTAL -	6	3337.	6	3337.	0	0.	0	0.
PEABODY PROCESS SYSTEMS								
LIMESTONE	9	4033.	8	3583.	0	0.	1	450.
LIME/ALKALINE FLYASH	1	475.	1	475.	0	0.	0	0.
TOTAL -	10	4508.	9	4058.	0	0.	1	450.
RESEARCH-COTTRELL								
LIMESTONE	17	6984.	12	4022.	4	2212.	1	750.
LIME/SPRAY DRYING	1	50.	1	50.	0	0.	0	0.
TOTAL -	18	7034.	13	4072.	4	2212.	1	750.
ROCKWELL INTERNATIONAL								
AQUEOUS CARBONATE/SPRAY DRYING	1	100.	1	100.	0	0.	0	0.
LIME/SPRAY DRYING	1	276.	0	0.	1	276.	0	0.
TOTAL -	2	376.	1	100.	1	276.	0	0.
TENNESSEE VALLEY AUTHORITY								
LIMESTONE	1	550.	1	550.	0	0.	0	0.
TOTAL -	1	550.	1	550.	0	0.	0	0.
THYSSEN/CEA								
DUAL ALKALI	1	299.	1	299.	0	0.	0	0.
LIME	1	500.	1	500.	0	0.	0	0.
LIME/ALKALINE FLYASH	3	1094.	3	1094.	0	0.	0	0.
SODIUM CARBONATE	4	625.	4	625.	0	0.	0	0.
TOTAL -	9	2518.	9	2518.	0	0.	0	0.
UNITED ENGINEERS								
MAGNESIUM OXIDE	3	724.	3	724.	0	0.	0	0.
TOTAL -	3	724.	3	724.	0	0.	0	0.
WHEELABRATOR AIR POLTN. CNTRL.								
LIMESTONE	1	750.	0	0.	0	0.	1	750.
TOTAL -	1	750.	0	0.	0	0.	1	750.
WHEELABRATOR-FRYE/R.I.								
SODIUM CARBONATE/SPRAY DRYING	1	440.	1	440.	0	0.	0	0.
TOTAL -	1	440.	1	440.	0	0.	0	0.
TOTAL -	164	70780.	124	47255.	25	14335.	15	9190.

SECTION 5
SUMMARY OF FGD SYSTEMS BY PROCESS

	TOTAL		STATUS: OPERATIONAL		CONSTRUCTION		CONTRACT AWARDED		PLANNED	
PROCESS	NO.	MW	NO.	MW	NO.	MW	NO.	MW	NO.	MW
AQUEOUS CARBONATE/SPRAY DRYING	1	100.	1	100.	0	0.	0	0.	0	0.
LIMESTONE	4	1400.	1	166.	1	458.	0	0.	2	776.
MAGNESIUM OXIDE	3	724.	3	724.	0	0.	0	0.	0	0.
WELLMAN LORD	7	1959.	7	1959.	0	0.	0	0.	0	0.
SUBTOTAL - SALEABLE PRODUCT	15	4183.	12	2949.	1	458.	0	0.	2	776.
DUAL ALKALI	6	2228.	4	1572.	2	656.	0	0.	0	0.
LIME	30	13441.	27	11301.	2	1490.	1	650.	0	0.
LIMESTONE	90	44008.	54	22085.	12	7522.	8	5480.	16	8921.
LIMESTONE/ALKALINE FLYASH	2	1500.	2	1500.	0	0.	0	0.	0	0.
LIME/ALKALINE FLYASH	11	4394.	10	3616.	1	778.	0	0.	0	0.
LIME/SPRAY DRYING	16	6333.	8	2287.	5	2416.	3	1630.	0	0.
PROCESS NOT SELECTED	6	4090.	0	0.	0	0.	0	0.	6	4090.
SODIUM CARBONATE	9	3155.	6	1505.	1	550.	2	1100.	0	0.
SODIUM CARBONATE/SPRAY DRYING	1	440.	1	440.	0	0.	0	0.	0	0.
TRONA/DRY INJECTION	1	500.	0	0.	0	0.	0	0.	1	500.
SUBTOTAL - THROWAWAY PRODUCT	172	80089.	112	44306.	23	13412.	14	8860.	23	13511.
TOTALS	187	84272.	124	47255.	24	13870.	14	8860.	25	14287.
SALEABLE PRODUCT PROCESS % OF TOTAL MW		5		6		3		0		5

NOTE: 30 UNITS ARE UNDECIDED (WITH RESPECT TO SALEABLE/THROWAWAY PRODUCT) AND ARE NOT INCLUDED IN THIS TABLE. THE 6 UNITS LISTED AS PROCESS NOT SELECTED ABOVE ARE PLANNED THROWAWAY PRODUCT FGD SYSTEMS; HOWEVER A SPECIFIC PROCESS HAS NOT YET BEEN CHOSEN.

SECTION 6
SUMMARY OF OPERATIONAL FGD SYSTEMS BY PROCESS AND UNIT

PROCESS/ UNIT NAME	UNIT NO.	CAPACITY MW	INITIAL STARTUP	COMMERCIAL STARTUP
AQUEOUS CARBONATE/SPRAY DRYING				
CHARLES R. HUNTLEY	66	100.	4/82	8/82
		100.		
DUAL ALKALI				
A.B. BROWN	1	265.	3/79	4/79
CANE RUN	6	299.	4/79	4/79
NEWTON	1	617.	9/79	12/79
SCHAHFER	17	391.	4/83	6/83
		1572.		
LIME				
BRUCE MANSFIELD	3	917.	6/80	10/80
BRUCE MANSFIELD	2	917.	7/77	10/77
BRUCE MANSFIELD	1	917.	12/75	6/76
CANE RUN	5	200.	12/77	7/78
CANE RUN	4	188.	8/76	8/77
CONESVILLE-	6	350.	6/78	7/78
CONESVILLE	5	350.	1/77	2/77
D.B. WILSON	1	440.	9/84	9/84
EAST BEND	2	650.	3/81	3/81
ELRAMA	1-4	510.	10/75	10/75
GREEN	1	242.	12/79	12/79
GREEN	2	242.	11/80	12/80
GREEN RIVER	1-3	65.	9/75	6/76
HUNTER	1	360.	3/79	5/79
HUNTER	2	360.	6/80	6/80
HUNTINGTON	1	366.	5/78	5/78
J.B. SIMS	3	65.	5/83	8/83
MILL CREEK	4	495.	7/82	10/82
MILL CREEK	3	427.	8/78	3/79
MILL CREEK	2	350.	12/81	4/82
MILL CREEK	1	358.	12/80	4/81
MITCHELL	33	300.	8/82	9/82
PADDY'S RUN	6	72.	4/73	4/73
PHILLIPS	1-6	408.	7/73	6/74
PLEASANTS	1	626.	12/78	12/80
PLEASANTS	2	626.	10/80	12/80
SPURLOCK	2	500.	12/82	4/83
		11301.		
LIMESTONE				
APACHE	3	98.	6/79	6/79
APACHE	2	98.	8/78	1/79
BONANZA	1	410.	9/84	12/84
CHOLLA	4	126.	3/81	6/81
CHOLLA	2	285.	4/78	6/78
CHOLLA	1	119.	10/73	12/73
CORONADO	2	320.	7/80	10/81
CORONADO	1	320.	11/79	12/79
CRAIG	2	455.	12/79	5/80
CRAIG	1	455.	10/80	12/80
CROSS	2	450.	10/83	5/84
DALLMAN	3	205.	10/80	1/81
DUCK CREEK	1	416.	7/76	8/78
GIBBONS CREEK	1	400.	11/82	10/83
GIBSON	5	670.	10/82	3/83
HUNTER	3	400.	4/83	6/83

THIS TABLE IDENTIFIES UNITS IN ALPHABETICAL ORDER.
RESPECTIVE COMPANIES CAN BE FOUND IN SECTION 1.

SECTION 6
SUMMARY OF OPERATIONAL FGD SYSTEMS BY PROCESS AND UNIT

PROCESS/ UNIT NAME	UNIT NO.	CAPACITY MW	INITIAL STARTUP	COMMERCIAL STARTUP
JEFFREY	3	540.	5/83	5/83
JEFFREY	2	540.	1/80	5/80
JEFFREY	1	540.	8/78	8/78
LA CYGNE	1	874.	12/72	6/73
LARAMIE RIVER	2	570.	7/81	7/86
LARAMIE RIVER	1	570.	7/80	7/80
LAWRENCE	5	420.	4/78	4/78
LAWRENCE	4	125.	1/77	1/77
MARION	4	184.	4/79	6/79
MARTIN LAKE	1	595.	4/77	10/77
MARTIN LAKE	3	595.	2/79	2/79
MARTIN LAKE	2	595.	5/78	5/78
MCINTOSH	3	364.	7/82	9/82
MEROM	2	441.	12/81	2/82
MEROM	1	441.	8/82	8/82
MONTICELLO	3	800.	5/78	10/78
MUSCATINE	9	166.	4/83	8/83
PARADISE	1	704.	5/83	7/83
PARADISE	2	704.	7/83	12/83
PETERSBURG	3	532.	12/77	12/77
PROJECT	1	55.	5/83	5/83
R.D. MORROW, SR.	2	124.	6/79	6/79
R.D. MORROW, SR.	1	124.	8/78	8/78
SAN MIGUEL	1	400.	8/81	10/81
SANDOW	4	382.	12/80	1/81
SEMINOLE	2	620.	9/84	1/85
SEMINOLE	1	620.	5/83	2/84
SIKESTON	1	235.	6/81	9/81
SOMERSET	1	625.	7/84	8/84
SOUTHWEST	1	194.	4/77	9/77
THOMAS HILL	3	670.	10/82	12/82
TOMBIGBEE	3	179.	6/79	6/79
TOMBIGBEE	2	179.	9/78	9/78
WIDOWS CREEK	8	550.	5/77	1/78
WIDOWS CREEK	7	575.	3/81	9/81
WINYAH	2	140.	7/77	7/77
WINYAH	4	280.	7/81	9/81
WINYAH	3	280.	7/80	7/80
W.A. PARISH	8	492.	10/82	12/82
		22251.		
LIMESTONE/ALKALINE FLYASH				
SHERBURNE	2	750.	3/77	4/77
SHERBURNE	1	750.	3/76	5/76
		1500.		
LIME/ALKALINE FLYASH				
CLAY BOSWELL	4	475.	2/80	4/80
COAL CREEK	1	327.	7/79	8/79
COAL CREEK	2	327.	7/80	9/80
COLSTRIP	1	360.	9/75	11/75
COLSTRIP	3	778.	10/83	1/84
COLSTRIP	2	360.	5/76	10/76
FOUR CORNERS	3	225.	11/79	11/79
FOUR CORNERS	2	195.	11/79	11/79
FOUR CORNERS	1	195.	11/79	11/79
MILTON R. YOUNG	2	374.	9/77	6/78
		3616.		

THIS TABLE IDENTIFIES UNITS IN ALPHABETICAL ORDER.
RESPECTIVE COMPANIES CAN BE FOUND IN SECTION 1.

SECTION 6
SUMMARY OF OPERATIONAL FGD SYSTEMS BY PROCESS AND UNIT

PROCESS/ UNIT NAME	UNIT NO.	CAPACITY MW	INITIAL STARTUP	COMMERCIAL STARTUP
LIME/SPRAY DRYING				
ANTELOPE VALLEY	1	440.	5/83	7/84
CRAIG	3	447.	6/84	2/85
HOLCOMB	1	347.	7/83	8/83
LARAMIE RIVER	3	570.	11/82	11/82
RAWHIDE	1	279.	12/83	4/84
RIVERSIDE	6-7	110.	11/80	12/80
SHIRAS	3	44.	3/83	4/83
STANTON	1A	50.	7/82	11/82
		2287.		
MAGNESIUM OXIDE				
CROMBY	1	150.	10/82	1/83
EDDYSTONE	2	334.	11/82	12/82
EDDYSTONE	1	240.	9/82	12/82
		724.		
SODIUM CARBONATE				
JIM BRIDGER	4	550.	9/79	2/80
NAUGHTON	3	330.	9/81	12/81
REID GARDNER	4	250.	6/83	7/83
REID GARDNER	3	125.	6/76	7/76
REID GARDNER	2	125.	4/74	4/74
REID GARDNER	1	125.	3/74	4/74
		1505.		
SODIUM CARBONATE/SPRAY DRYING				
COYOTE	1	440.	4/81	5/81
		440.		
WELLMAN LORD				
DELAWARE CITY	3	60.	5/80	5/80
DELAWARE CITY	2	60.	5/80	5/80
DELAWARE CITY	1	60.	5/80	5/80
SAN JUAN	1	361.	4/78	4/78
SAN JUAN	3	534.	12/79	12/79
SAN JUAN	2	350.	8/78	8/78
SAN JUAN	4	534.	5/82	7/82
		1959.		
TOTAL		47255.		

SECTION 7
SUMMARY OF END-PRODUCT DISPOSAL PRACTICES FOR OPERATIONAL FGD SYSTEMS

PROCESS/ UNIT NAME	UNIT NO	THROWAWAY: LANDFILL	THROWAWAY: POND	BYPRODUCT: TYPE	BYPRODUCT: DISPOSITION
AQUEOUS CARBONATE/SPRAY DRYING					
CHARLES R. HUNTLEY	66			ELEMENTAL SULFUR	MARKETED
DUAL ALKALI					
A.B. BROWN	1	UNSTABILIZED			
CANE RUN	6	FIXATION			
NEWTON	1	FIXATION			
SCHAHFER	17	UNSTABILIZED			
LIME					
BRUCE MANSFIELD	3		FIXATION		
BRUCE MANSFIELD	2		FIXATION		
BRUCE MANSFIELD	1		FIXATION		
CANE RUN	5	FIXATION			
CANE RUN	4	FIXATION			
CONESVILLE	6	FIXATION			
CONESVILLE	5	FIXATION			
D.B. WILSON	1				
EAST BEND	2	FIXATION			
ELRAMA	1-4	FIXATION			
GREEN	1	STABILIZATION		NONE	
GREEN	2	STABILIZATION		NONE	
GREEN RIVER	1-3		UNSTABILIZED		
HUNTER	1	STABILIZATION			
HUNTER	2	STABILIZATION			
HUNTINGTON	1	STABILIZATION			
J.B. SIMS	3	FIXATION			
MILL CREEK	4		FIXATION	NONE	
MILL CREEK	3	FIXATION		NONE	
MILL CREEK	2	FIXATION		NONE	
MILL CREEK	1	FIXATION		NONE	
MITCHELL	33				
PADDY'S RUN	6	FIXATION			
PHILLIPS	1-6	FIXATION			
PLEASANTS	1		FIXATION	NONE	
PLEASANTS	2		FIXATION	NONE	
SPURLOCK	2				
LIMESTONE					
APACHE	3				
APACHE	2				
BONANZA	1	UNSTABILIZED			
CHOLLA	4				
CHOLLA	2		STABILIZATION		
CHOLLA	1		UNSTABILIZED		
CORONADO	2		UNSTABILIZED		
CORONADO	1		UNSTABILIZED		
CRAIG	2				
CRAIG	1				
CROSS	2	STABILIZATION			
DALLMAN	3	FORCED-OX		NONE	
DUCK CREEK	1		UNSTABILIZED		
GIBBONS CREEK	1	FIXATION			
GIBSON	5				
HUNTER	3	STABILIZATION			
JEFFREY	3		FORCED-OX		
JEFFREY	2		FORCED-OX		
JEFFREY	1		FORCED-OX		
LA CYGNE	1		UNSTABILIZED		
LARAMIE RIVER	2	FORCED-OX			
LARAMIE RIVER	1	FORCED-OX			
LAWRENCE	5		FORCED-OX		

SECTION 7
SUMMARY OF END-PRODUCT DISPOSAL PRACTICES FOR OPERATIONAL FGD SYSTEMS

PROCESS/ UNIT NAME	UNIT NO	THROWAWAY		BYPRODUCT	
		LANDFILL	POND	TYPE	DISPOSITION
LAWRENCE	4		FORCED-OX		
MARION	4	STABILIZATION			
MARTIN LAKE	1	STABILIZATION			
MARTIN LAKE	3	STABILIZATION			
MARTIN LAKE	2	STABILIZATION			
MCINTOSH	3	FIXATION			
MEROM	2	FORCED-OX			
MEROM	1	FORCED-OX			
MONTICELLO	3		STABILIZATION		
MUSCATINE	9	FORCED-OX		GYPSUM	MARKETED
PARADISE	1	FORCED-OX			
PARADISE	2	FORCED-OX			
PETERSBURG	3	FIXATION			
PROJECT	1	FORCED-OX			
R.D. MORROW, SR.	2	FIXATION			
R.D. MORROW, SR.	1	FIXATION			
SAN MIGUEL	1	STABILIZATION			
SANDOW	4		FORCED-OX		
SEMINOLE	2	FIXATION			
SEMINOLE	1	FORCED-OX			
SIKESTON	1		UNSTABILIZED		
SOMERSET	1	STABILIZATION			
SOUTHWEST	1	STABILIZATION			
THOMAS HILL	3	FORCED-OX			
TOMBIGBEE	3		UNSTABILIZED		
TOMBIGBEE	2		UNSTABILIZED		
WIDOWS CREEK	8		FORCED-OX		
WIDOWS CREEK	7		FORCED-OX		
WINYAH	2				
WINYAH	4				
WINYAH	3		UNSTABILIZED		
W.A. PARISH	8	STABILIZATION			
LIMESTONE/ALKALINE FLYASH					
SHERBURNE	2		FORCED-OX		
SHERBURNE	1		FORCED-OX		
LIME/ALKALINE FLYASH					
CLAY BOSWELL	4		UNSTABILIZED		
COAL CREEK	1				
COAL CREEK	2				
COLSTRIP	1		UNSTABILIZED		
COLSTRIP	3		FORCED-OX		
COLSTRIP	2		UNSTABILIZED		
FOUR CORNERS	3				
FOUR CORNERS	2				
FOUR CORNERS	1				
MILTON R. YOUNG	2	UNSTABILIZED			
LIME/SPRAY DRYING					
ANTELOPE VALLEY	1				
CRAIG	3				
HOLCOMB	1				
LARAMIE RIVER	3				
RAWHIDE	1				
RIVERSIDE	6-7				
SHIRAS	3				
STANTON	1A				
MAGNESIUM OXIDE					
CROMBY	1			SULFURIC ACID	MARKETED
EDDYSTONE	2			SULFURIC ACID	MARKETED
EDDYSTONE	1			SULFURIC ACID	MARKETED

SECTION 7
SUMMARY OF END-PRODUCT DISPOSAL PRACTICES FOR OPERATIONAL FGD SYSTEMS

PROCESS/ UNIT NAME	UNIT NO	THROWAWAY		BYPRODUCT	
		LANDFILL	POND	TYPE	DISPOSITION
SODIUM CARBONATE					
JIM BRIDGER	4		UNSTABILIZED		
NAUGHTON	3				
REID GARDNER	4				
REID GARDNER	3		UNSTABILIZED		
REID GARDNER	2		UNSTABILIZED		
REID GARDNER	1		UNSTABILIZED		
SODIUM CARBONATE/SPRAY DRYING					
COYOTE	1				
WELLMAN LORD					
DELAWARE CITY	3			SULFURIC ACID	MARKETED
DELAWARE CITY	2			SULFURIC ACID	MARKETED
DELAWARE CITY	1			SULFURIC ACID	MARKETED
SAN JUAN	1			SULFURIC ACID	MARKETED
SAN JUAN	3			SULFURIC ACID	MARKETED
SAN JUAN	2			SULFURIC ACID	MARKETED
SAN JUAN	4			SULFURIC ACID	

SECTION 8
SUMMARY OF FGD SYSTEMS IN OPERATION

COMPANY NAME/ UNIT NAME	UNIT NO.	NEW OR RETROFIT	CAPACITY MW	PROCESS/ SYSTEM SUPPLIER	START-UP DATE
ALABAMA ELECTRIC TOMBIGBEE	2	NEW	179.	LIMESTONE PEABODY PROCESS SYSTEMS	9/78
ALABAMA ELECTRIC TOMBIGBEE	3	NEW	179.	LIMESTONE PEABODY PROCESS SYSTEMS	6/79
ARIZONA ELECTRIC POWER APACHE	2	NEW	98.	LIMESTONE RESEARCH-COTTRELL	8/78
ARIZONA ELECTRIC POWER APACHE	3	NEW	98.	LIMESTONE RESEARCH-COTTRELL	6/79
ARIZONA PUBLIC SERVICE CHOLLA	1	RETROFIT	119.	LIMESTONE RESEARCH-COTTRELL	10/73
ARIZONA PUBLIC SERVICE CHOLLA	2	NEW	285.	LIMESTONE RESEARCH-COTTRELL	4/78
ARIZONA PUBLIC SERVICE CHOLLA	4	NEW	126.	LIMESTONE RESEARCH-COTTRELL	3/81
ARIZONA PUBLIC SERVICE FOUR CORNERS	1	RETROFIT	195.	LIME/ALKALINE FLYASH GE ENVIRONMENTAL SERVICES	11/79
ARIZONA PUBLIC SERVICE FOUR CORNERS	2	RETROFIT	195.	LIME/ALKALINE FLYASH GE ENVIRONMENTAL SERVICES	11/79
ARIZONA PUBLIC SERVICE FOUR CORNERS	3	RETROFIT	225.	LIME/ALKALINE FLYASH GE ENVIRONMENTAL SERVICES	11/79
ASSOCIATED ELECTRIC THOMAS HILL	3	NEW	670.	LIMESTONE M.W. KELLOGG	10/82
BASIN ELECTRIC POWER ANTELOPE VALLEY	1	NEW	440.	LIME/SPRAY DRYING JOY MFG/NIRO ATOMIZER	5/83
BASIN ELECTRIC POWER LARAMIE RIVER	1	NEW	570.	LIMESTONE RESEARCH-COTTRELL	7/80
BASIN ELECTRIC POWER LARAMIE RIVER	2	NEW	570.	LIMESTONE RESEARCH-COTTRELL	7/81
BASIN ELECTRIC POWER LARAMIE RIVER	3	NEW	570.	LIME/SPRAY DRYING BABCOCK & WILCOX	11/82
BIG RIVERS ELECTRIC D.B. WILSON	1	NEW	440.	LIME M.W. KELLOGG	9/84
BIG RIVERS ELECTRIC GREEN	1	NEW	242.	LIME AMERICAN AIR FILTER	12/79
BIG RIVERS ELECTRIC GREEN	2	NEW	242.	LIME AMERICAN AIR FILTER	11/80
CENTRAL ILLINOIS LIGHT DUCK CREEK	1	NEW	416.	LIMESTONE ENVIRONEERING, RILEY STOKER	7/76
CENTRAL ILLINOIS PUBLIC SERV NEWTON	1	NEW	617.	DUAL ALKALI GE ENVIRONMENTAL SERVICES	9/79
CINCINNATI GAS & ELECTRIC EAST BEND	2	NEW	650.	LIME BABCOCK & WILCOX	3/81
COLORADO UTE ELECTRIC CRAIG	1	NEW	455.	LIMESTONE PEABODY PROCESS SYSTEMS	10/80
COLORADO UTE ELECTRIC CRAIG	2	NEW	455.	LIMESTONE PEABODY PROCESS SYSTEMS	12/79

SECTION 8
SUMMARY OF FGD SYSTEMS IN OPERATION

COMPANY NAME/ UNIT NAME	UNIT NO.	NEW OR RETROFIT	CAPACITY MW	PROCESS/ SYSTEM SUPPLIER	START-UP DATE
COLORADO UTE ELECTRIC CRAIG	3	NEW	447.	LIME/SPRAY DRYING BABCOCK & WILCOX	6/84
COLUMBUS & SOUTHERN OHIO ELEC CONESVILLE	5	NEW	350.	LIME AIR CORRECTION DIVISION, UOP	1/77
COLUMBUS & SOUTHERN OHIO ELEC CONESVILLE	6	NEW	350.	LIME AIR CORRECTION DIVISION, UOP	6/78
COOPERATIVE POWER ASSOCIATION COAL CREEK	1	NEW	327.	LIME/ALKALINE FLYASH COMBUSTION ENGINEERING	7/79
COOPERATIVE POWER ASSOCIATION COAL CREEK	2	NEW	327.	LIME/ALKALINE FLYASH COMBUSTION ENGINEERING	7/80
DELMARVA POWER & LIGHT DELAWARE CITY	1	RETROFIT	60.	WELLMAN LORD DAVY MCKEE	5/80
DELMARVA POWER & LIGHT DELAWARE CITY	2	RETROFIT	60.	WELLMAN LORD DAVY MCKEE	5/80
DELMARVA POWER & LIGHT DELAWARE CITY	3	RETROFIT	60.	WELLMAN LORD DAVY MCKEE	5/80
DESERET GEN & TRANS BONANZA	1	NEW	410.	LIMESTONE COMBUSTION ENGINEERING	9/84
DUQUESNE LIGHT ELRAMA	1-4	RETROFIT	510.	LIME GE ENVIRONMENTAL SERVICES	10/75
DUQUESNE LIGHT PHILLIPS	1-6	RETROFIT	408.	LIME GE ENVIRONMENTAL SERVICES	7/73
EAST KENTUCKY POWER SPURLOCK	2	NEW	500.	LIME THYSSEN/CEA	12/82
GRAND HAVEN BRD OF LIGHT & PWR J.B. SIMS	3	NEW	65.	LIME BABCOCK & WILCOX	5/83
HOOSIER ENERGY MEROM	1	NEW	441.	LIMESTONE MITSUBISHI HEAVY INDUSTRIES	8/82
HOOSIER ENERGY MEROM	2	NEW	441.	LIMESTONE MITSUBISHI HEAVY INDUSTRIES	12/81
HOUSTON LIGHTING & POWER W.A. PARISH	8	NEW	492.	LIMESTONE GE ENVIRONMENTAL SERVICES	10/82
INDIANAPOLIS POWER & LIGHT PETERSBURG	3	NEW	532.	LIMESTONE AIR CORRECTION DIVISION, UOP	12/77
KANSAS CITY POWER & LIGHT LA CYGNE	1	NEW	874.	LIMESTONE BABCOCK & WILCOX	12/72
KANSAS POWER & LIGHT JEFFREY	1	NEW	540.	LIMESTONE COMBUSTION ENGINEERING	8/78
KANSAS POWER & LIGHT JEFFREY	2	NEW	540.	LIMESTONE COMBUSTION ENGINEERING	1/80
KANSAS POWER & LIGHT JEFFREY	3	NEW	540.	LIMESTONE COMBUSTION ENGINEERING	5/83
KANSAS POWER & LIGHT LAWRENCE	4	RETROFIT	125.	LIMESTONE COMBUSTION ENGINEERING	1/77
KANSAS POWER & LIGHT LAWRENCE	5	RETROFIT	420.	LIMESTONE COMBUSTION ENGINEERING	4/78

SECTION 8
SUMMARY OF FGD SYSTEMS IN OPERATION

COMPANY NAME/ UNIT NAME	UNIT NO.	NEW OR RETROFIT	CAPACITY MW	PROCESS/ SYSTEM SUPPLIER	START-UP DATE
KENTUCKY UTILITIES GREEN RIVER	1-3	RETROFIT	65.	LIME AMERICAN AIR FILTER	9/75
LAKELAND UTILITIES MCINTOSH	3	NEW	364.	LIMESTONE BABCOCK & WILCOX	7/82
LOUISVILLE GAS & ELECTRIC CANE RUN	4	RETROFIT	188.	LIME AMERICAN AIR FILTER	8/76
LOUISVILLE GAS & ELECTRIC CANE RUN	5	RETROFIT	200.	LIME COMBUSTION ENGINEERING	12/77
LOUISVILLE GAS & ELECTRIC CANE RUN	6	RETROFIT	299.	DUAL ALKALI THYSSEN/CEA	4/79
LOUISVILLE GAS & ELECTRIC MILL CREEK	1	RETROFIT	358.	LIME COMBUSTION ENGINEERING	12/80
LOUISVILLE GAS & ELECTRIC MILL CREEK	2	RETROFIT	350.	LIME COMBUSTION ENGINEERING	12/81
LOUISVILLE GAS & ELECTRIC MILL CREEK	3	NEW	427.	LIME AMERICAN AIR FILTER	8/78
LOUISVILLE GAS & ELECTRIC MILL CREEK	4	NEW	495.	LIME AMERICAN AIR FILTER	7/82
LOUISVILLE GAS & ELECTRIC PADDY'S RUN	6	RETROFIT	72.	LIME COMBUSTION ENGINEERING	4/73
MARQUETTE BOARD OF LIGHT & PWR SHIRAS	3	NEW	44.	LIME/SPRAY DRYING GE ENVIRONMENTAL SERVICES	3/83
MICHIGAN SO CENTRAL PWR AGENCY PROJECT	1	NEW	55.	LIMESTONE BABCOCK & WILCOX	5/83
MINNESOTA POWER & LIGHT CLAY BOSWELL	4	NEW	475.	LIME/ALKALINE FLYASH PEABODY PROCESS SYSTEMS	2/80
MINNKOTA POWER MILTON R. YOUNG	2	NEW	374.	LIME/ALKALINE FLYASH THYSSEN/CEA	9/77
MONONGAHELA POWER PLEASANTS	1	NEW	626.	LIME BABCOCK & WILCOX	12/78
MONONGAHELA POWER PLEASANTS	2	NEW	626.	LIME BABCOCK & WILCOX	10/80
MONTANA POWER COLSTRIP	1	NEW	360.	LIME/ALKALINE FLYASH THYSSEN/CEA	9/75
MONTANA POWER COLSTRIP	2	NEW	360.	LIME/ALKALINE FLYASH THYSSEN/CEA	5/76
MONTANA POWER COLSTRIP	3	NEW	778.	LIME/ALKALINE FLYASH BECHTEL/MONTANA POWER	10/83
MONTANA-DAKOTA UTILITIES COYOTE	1	NEW	440.	SODIUM CARBONATE/SPRAY DRYING WHEELABRATOR-FRYE/R.I.	4/81
MUSCATINE POWER & WATER MUSCATINE	9	NEW	166.	LIMESTONE RESEARCH-COTTRELL	4/83
NEVADA POWER REID GARDNER	1	RETROFIT	125.	SODIUM CARBONATE THYSSEN/CEA	3/74
NEVADA POWER REID GARDNER	2	RETROFIT	125.	SODIUM CARBONATE THYSSEN/CEA	4/74

SECTION 8
SUMMARY OF FGD SYSTEMS IN OPERATION

COMPANY NAME/ UNIT NAME	UNIT NO.	NEW OR RETROFIT	CAPACITY MW	PROCESS/ SYSTEM SUPPLIER	START-UP DATE
NEVADA POWER REID GARDNER	3	NEW	125.	SODIUM CARBONATE THYSSEN/CEA	6/76
NEVADA POWER REID GARDNER	4	NEW	250.	SODIUM CARBONATE THYSSEN/CEA	6/83
NEW YORK STATE ELEC & GAS SOMERSET	1	NEW	625.	LIMESTONE PEABODY PROCESS SYSTEMS	7/84
NIAGARA MOHAWK POWER CHARLES R. HUNTLEY	66	RETROFIT	100.	AQUEOUS CARBONATE/SPRAY DRYING ROCKWELL INTERNATIONAL	4/82
NORTHERN INDIANA PUB SERVICE SCHAHFER	17	NEW	391.	DUAL ALKALI FMC	4/83
NORTHERN STATES POWER RIVERSIDE	6-7	RETROFIT	110.	LIME/SPRAY DRYING JOY MFG/NIRO ATOMIZER	11/80
NORTHERN STATES POWER SHERBURNE	1	NEW	750.	LIMESTONE/ALKALINE FLYASH COMBUSTION ENGINEERING	3/76
NORTHERN STATES POWER SHERBURNE	2	NEW	750.	LIMESTONE/ALKALINE FLYASH COMBUSTION ENGINEERING	3/77
PACIFIC POWER & LIGHT JIM BRIDGER	4	NEW	550.	SODIUM CARBONATE AIR CORRECTION DIVISION, UOP	9/79
PENNSYLVANIA POWER BRUCE MANSFIELD	1	NEW	917.	LIME GE ENVIRONMENTAL SERVICES	12/75
PENNSYLVANIA POWER BRUCE MANSFIELD	2	NEW	917.	LIME GE ENVIRONMENTAL SERVICES	7/77
PENNSYLVANIA POWER BRUCE MANSFIELD	3	NEW	917.	LIME M.W. KELLOGG	6/80
PHILADELPHIA ELECTRIC CROMBY	1	RETROFIT	150.	MAGNESIUM OXIDE UNITED ENGINEERS	10/82
PHILADELPHIA ELECTRIC EDDYSTONE	1	RETROFIT	240.	MAGNESIUM OXIDE UNITED ENGINEERS	9/82
PHILADELPHIA ELECTRIC EDDYSTONE	2	RETROFIT	334.	MAGNESIUM OXIDE UNITED ENGINEERS	11/82
PLATTE RIVER POWER AUTHORITY RAWHIDE	1	NEW	279.	LIME/SPRAY DRYING JOY MFG/NIRO ATOMIZER	12/83
PUBLIC SERVICE INDIANA GIBSON	5	NEW	670.	LIMESTONE M.W. KELLOGG	10/82
PUBLIC SERVICE OF NEW MEXICO SAN JUAN	1	RETROFIT	361.	WELLMAN LORD DAVY MCKEE	4/78
PUBLIC SERVICE OF NEW MEXICO SAN JUAN	2	RETROFIT	350.	WELLMAN LORD DAVY MCKEE	8/78
PUBLIC SERVICE OF NEW MEXICO SAN JUAN	3	NEW	534.	WELLMAN LORD DAVY MCKEE	12/79
PUBLIC SERVICE OF NEW MEXICO SAN JUAN	4	NEW	534.	WELLMAN LORD DAVY MCKEE	5/82
SALT RIVER PROJECT CORONADO	1	NEW	320.	LIMESTONE M.W. KELLOGG	11/79
SALT RIVER PROJECT CORONADO	2	NEW	320.	LIMESTONE M.W. KELLOGG	7/80

SECTION 8
SUMMARY OF FGD SYSTEMS IN OPERATION

COMPANY NAME/ UNIT NAME	UNIT NO.	NEW OR RETROFIT	CAPACITY MW	PROCESS/ SYSTEM SUPPLIER	START-UP DATE
SAN MIGUEL ELECTRIC SAN MIGUEL	1	NEW	400.	LIMESTONE BABCOCK & WILCOX	8/81
SEMINOLE ELECTRIC SEMINOLE	1	NEW	620.	LIMESTONE PEABODY PROCESS SYSTEMS	5/83
SEMINOLE ELECTRIC SEMINOLE	2	NEW	620.	LIMESTONE PEABODY PROCESS SYSTEMS	9/84
SIKESTON BRD OF MUNICIPAL UTIL SIKESTON	1	NEW	235.	LIMESTONE BABCOCK & WILCOX	6/81
SOUTH CAROLINA PUBLIC SERVICE CROSS	2	NEW	450.	LIMESTONE PEABODY PROCESS SYSTEMS	10/83
SOUTH CAROLINA PUBLIC SERVICE WINYAH	2	NEW	140.	LIMESTONE BABCOCK & WILCOX	7/77
SOUTH CAROLINA PUBLIC SERVICE WINYAH	3	NEW	280.	LIMESTONE BABCOCK & WILCOX	7/80
SOUTH CAROLINA PUBLIC SERVICE WINYAH	4	NEW	280.	LIMESTONE AMERICAN AIR FILTER	7/81
SOUTH MISSISSIPPI ELEC PWR R.D. MORROW, SR.	1	NEW	124.	LIMESTONE ENVIRONEERING, RILEY STOKER	8/78
SOUTH MISSISSIPPI ELEC PWR R.D. MORROW, SR.	2	NEW	124.	LIMESTONE ENVIRONEERING, RILEY STOKER	6/79
SOUTHERN ILLINOIS POWER MARION	4	NEW	184.	LIMESTONE BABCOCK & WILCOX	4/79
SOUTHERN INDIANA GAS & ELEC A.B. BROWN	1	NEW	265.	DUAL ALKALI FMC	3/79
SPRINGFIELD CITY UTILITIES SOUTHWEST	1	NEW	194.	LIMESTONE AIR CORRECTION DIVISION, UOP	4/77
SPRINGFIELD WATER, LIGHT & PWR DALLMAN	3	NEW	205.	LIMESTONE RESEARCH-COTTRELL	10/80
SUNFLOWER ELECTRIC HOLCOMB	1	NEW	347.	LIME/SPRAY DRYING JOY MFG/NIRO ATOMIZER	7/83
TENNESSEE VALLEY AUTHORITY PARADISE	1	RETROFIT	704.	LIMESTONE GE ENVIRONMENTAL SERVICES	5/83
TENNESSEE VALLEY AUTHORITY PARADISE	2	RETROFIT	704.	LIMESTONE GE ENVIRONMENTAL SERVICES	7/83
TENNESSEE VALLEY AUTHORITY WIDOWS CREEK	7	RETROFIT	575.	LIMESTONE COMBUSTION ENGINEERING	3/81
TENNESSEE VALLEY AUTHORITY WIDOWS CREEK	8	RETROFIT	550.	LIMESTONE TENNESSEE VALLEY AUTHORITY	5/77
TEXAS MUNICIPAL POWER AGENCY GIBBONS CREEK	1	NEW	400.	LIMESTONE COMBUSTION ENGINEERING	11/82
TEXAS POWER & LIGHT SANDOW	4	NEW	382.	LIMESTONE COMBUSTION ENGINEERING	12/80
TEXAS UTILITIES MARTIN LAKE	1	NEW	595.	LIMESTONE RESEARCH-COTTRELL	4/77
TEXAS UTILITIES MARTIN LAKE	2	NEW	595.	LIMESTONE RESEARCH-COTTRELL	5/78

SECTION 8
SUMMARY OF FGD SYSTEMS IN OPERATION

COMPANY NAME/ UNIT NAME	UNIT NO.	NEW OR RETROFIT	CAPACITY MW	PROCESS/ SYSTEM SUPPLIER	START-UP DATE
TEXAS UTILITIES MARTIN LAKE	3	NEW	595.	LIMESTONE RESEARCH-COTTRELL	2/79
TEXAS UTILITIES MONTICELLO	3	NEW	800.	LIMESTONE GE ENVIRONMENTAL SERVICES	5/78
UNITED POWER ASSOCIATION STANTON	1A	NEW	50.	LIME/SPRAY DRYING RESEARCH-COTTRELL	7/82
UTAH POWER & LIGHT HUNTER	1	NEW	360.	LIME GE ENVIRONMENTAL SERVICES	3/79
UTAH POWER & LIGHT HUNTER	2	NEW	360.	LIME GE ENVIRONMENTAL SERVICES	6/80
UTAH POWER & LIGHT HUNTER	3	NEW	400.	LIMESTONE GE ENVIRONMENTAL SERVICES	4/83
UTAH POWER & LIGHT HUNTINGTON	1	NEW	366.	LIME GE ENVIRONMENTAL SERVICES	5/78
UTAH POWER & LIGHT NAUGHTON	3	RETROFIT	330.	SODIUM CARBONATE AIR CORRECTION DIVISION, UOP	9/81
WEST PENN POWER MITCHELL	33	RETROFIT	300.	LIME GE ENVIRONMENTAL SERVICES	8/82
TOTAL			47255.		

SECTION 9
SUMMARY OF FGD SYSTEMS UNDER CONSTRUCTION

COMPANY NAME/ UNIT NAME	UNIT NO.	NEW OR RETROFIT	CAPACITY MW	PROCESS/ SYSTEM SUPPLIER	START-UP DATE
ARIZONA PUBLIC SERVICE FOUR CORNERS	4	RETROFIT	745.	LIME BABCOCK & WILCOX	10/84
ARIZONA PUBLIC SERVICE FOUR CORNERS	5	RETROFIT	745.	LIME BABCOCK & WILCOX	10/84
BASIN ELECTRIC POWER ANTELOPE VALLEY	2	NEW	440.	LIME/SPRAY DRYING JOY MFG/NIRO ATOMIZER	11/85
GRAND RIVER DAM AUTHORITY GRDA	2	NEW	520.	LIME/SPRAY DRYING FLAKT	3/85
HOUSTON LIGHTING & POWER LIMESTONE	1	NEW	750.	LIMESTONE COMBUSTION ENGINEERING	12/85
HOUSTON LIGHTING & POWER LIMESTONE	2	NEW	750.	LIMESTONE COMBUSTION ENGINEERING	12/86
INDIANAPOLIS POWER & LIGHT PETERSBURG	4	NEW	530.	LIMESTONE RESEARCH-COTTRELL	3/86
JACKSONVILLE ELEC AUTHORITY ST.JOHNS RVR PWR PRK	1	NEW	612.	LIMESTONE RESEARCH-COTTRELL	4/87
JACKSONVILLE ELEC AUTHORITY ST.JOHNS RVR PWR PRK	2	NEW	612.	LIMESTONE RESEARCH-COTTRELL	10/88
LOS ANGELES DEPT OF WTR & PWR INTERMOUNTAIN	1	NEW	820.	LIMESTONE GE ENVIRONMENTAL SERVICES	7/86
LOS ANGELES DEPT OF WTR & PWR INTERMOUNTAIN	2	NEW	820.	LIMESTONE GE ENVIRONMENTAL SERVICES	7/87
LOWER COLORADO RIVER AUTH FAYETTE POWER PROJECT	3	NEW	451.	LIMESTONE COMBUSTION ENGINEERING	11/87
MONTANA POWER COLSTRIP	4	NEW	778.	LIME/ALKALINE FLYASH BECHTEL/MONTANA POWER	10/85
NORTHERN INDIANA PUB SERVICE SCHAHFER	18	NEW	391.	DUAL ALKALI FMC	6/86
NORTHERN STATES POWER SHERBURNE	3	NEW	810.	LIME/SPRAY DRYING JOY MFG/NIRO ATOMIZER	0/88
ORLANDO UTILITIES COMMISSION C.H. STANTON	1	NEW	465.	LIMESTONE COMBUSTION ENGINEERING	0/87
PACIFIC POWER & LIGHT JIM BRIDGER	2	RETROFIT	550.	SODIUM CARBONATE BABCOCK & WILCOX	0/86
PLAINS ELECTRIC G & T PLAINS ESCALANTE	1	NEW	233.	LIMESTONE COMBUSTION ENGINEERING	10/84
SIERRA PACIFIC POWER VALMY	2	NEW	276.	LIME/SPRAY DRYING ROCKWELL INTERNATIONAL	6/85
SOUTHERN INDIANA GAS & ELEC A.B. BROWN	2	NEW	265.	DUAL ALKALI FMC	1/85
SOUTHWESTERN ELECTRIC POWER DOLET HILLS	1	NEW	720.	LIMESTONE AIR CORRECTION DIVISION, UOP	12/85
SOUTHWESTERN ELECTRIC POWER HENRY W. PIRKEY	1	NEW	720.	LIMESTONE AIR CORRECTION DIVISION, UOP	12/84
TAMPA ELECTRIC BIG BEND	4	NEW	458.	LIMESTONE RESEARCH-COTTRELL	1/85

SECTION 9
SUMMARY OF FGD SYSTEMS UNDER CONSTRUCTION

COMPANY NAME/ UNIT NAME	UNIT NO.	NEW OR RETROFIT	CAPACITY MW	PROCESS/ SYSTEM SUPPLIER	START-UP DATE
TUCSON ELECTRIC POWER SPRINGERVILLE	1	NEW	370.	LIME/SPRAY DRYING JOY MFG/NIRO ATOMIZER	2/85
WEST TEXAS UTILITIES OKLAUNION	1	NEW	504.	LIMESTONE GE ENVIRONMENTAL SERVICES	9/86
TOTAL			14335.		

SECTION 10
SUMMARY OF CONTRACT AWARDED FGD SYSTEMS

COMPANY NAME/ UNIT NAME	UNIT NO.	NEW OR RETROFIT	CAPACITY MW	PROCESS/ SYSTEM SUPPLIER	START-UP DATE
CAJUN ELECTRIC POWER OXBOW	1	NEW	540.	LIME/SPRAY DRYING JOY MFG/NIRO ATOMIZER	99/99
CENTRAL POWER & LIGHT COLETO CREEK	2	NEW	720.	LIME/SPRAY DRYING JOY MFG/NIRO ATOMIZER	10/93
EAST KENTUCKY POWER J.K. SMITH	1	NEW	650.	LIME BABCOCK & WILCOX	0/92
HOUSTON LIGHTING & POWER MALAKOFF	1	NEW	690.	LIMESTONE GE ENVIRONMENTAL SERVICES	12/89
HOUSTON LIGHTING & POWER MALAKOFF	2	NEW	690.	LIMESTONE GE ENVIRONMENTAL SERVICES	12/90
KENTUCKY UTILITIES HANCOCK	1	NEW	650.	LIMESTONE BABCOCK & WILCOX	10/93
PACIFIC POWER & LIGHT JIM BRIDGER	1	RETROFIT	550.	SODIUM CARBONATE BABCOCK & WILCOX	0/90
PACIFIC POWER & LIGHT JIM BRIDGER	3	RETROFIT	550.	SODIUM CARBONATE BABCOCK & WILCOX	0/88
PACIFIC POWER & LIGHT WYODAK	1	RETROFIT	330.	LIME/SPRAY DRYING JOY/NIRO	0/86
SOUTH CAROLINA PUBLIC SERVICE CROSS	1	NEW	450.	LIMESTONE PEABODY PROCESS SYSTEMS	5/91
TEXAS POWER & LIGHT TWIN OAKS	1	NEW	750.	LIMESTONE GE ENVIRONMENTAL SERVICES	8/89
TEXAS POWER & LIGHT TWIN OAKS	2	NEW	750.	LIMESTONE GE ENVIRONMENTAL SERVICES	8/91
TEXAS UTILITIES FOREST GROVE	1	NEW	750.	LIMESTONE WHEELABRATOR AIR POLTN. CNTRL.	0/88
TEXAS UTILITIES MARTIN LAKE	4	NEW	750.	LIMESTONE RESEARCH-COTTRELL	0/89
TUCSON ELECTRIC POWER SPRINGERVILLE	2	NEW	370.	LIME/SPRAY DRYING JOY MFG/NIRO ATOMIZER	2/89
TOTAL			9190.		

SECTION 11
SUMMARY OF PLANNED FGD SYSTEMS

COMPANY NAME/ UNIT NAME	UNIT NO.	NEW OR RETROFIT	CAPACITY MW	PROCESS/ SYSTEM SUPPLIER	START-UP DATE
LETTER OF INTENT SIGNED					
IOWA ELECTRIC LIGHT & PWR GUTHRIE CO.	1	NEW	720.	LIMESTONE COMBUSTION ENGINEERING	99/99
MIDDLE SOUTH UTILITIES WILTON	1	NEW	890.	LIMESTONE COMBUSTION ENGINEERING	99/99
MIDDLE SOUTH UTILITIES WILTON	2	NEW	890.	LIMESTONE COMBUSTION ENGINEERING	99/99
TOTAL			2500.		
REQUESTING/EVALUATING BIDS					
BOSTON EDISON NEW BOSTON	1	NEW	388.	LIMESTONE VENDOR NOT SELECTED	10/87
BOSTON EDISON NEW BOSTON	2	NEW	388.	LIMESTONE VENDOR NOT SELECTED	6/88
LOUISVILLE GAS & ELECTRIC TRIMBLE COUNTY	1	NEW	575.	PROCESS NOT SELECTED VENDOR NOT SELECTED	7/87
LOUISVILLE GAS & ELECTRIC TRIMBLE COUNTY	2	NEW	575.	PROCESS NOT SELECTED VENDOR NOT SELECTED	7/90
TOTAL			1926.		
CONSIDERING FGD SYSTEMS					
ARIZONA PUBLIC SERVICE CHOLLA	5	NEW	126.	PROCESS NOT SELECTED VENDOR NOT SELECTED	0/97
ATLANTIC CITY ELECTRIC CUMBERLAND	1	NEW	330.	LIMESTONE VENDOR NOT SELECTED	99/99
BASIN ELECTRIC POWER ANTELOPE VALLEY	3	NEW	560.	LIME/SPRAY DRYING VENDOR NOT SELECTED	0/92
CENTRAL MAINE POWER SEARS ISLAND	1	NEW	600.	PROCESS NOT SELECTED VENDOR NOT SELECTED	11/95
CINCINNATI GAS & ELECTRIC EAST BEND	1	NEW	650.	PROCESS NOT SELECTED VENDOR NOT SELECTED	0/89
CINCINNATI GAS & ELECTRIC ZIMMER	1	NEW	1386.	PROCESS NOT SELECTED VENDOR NOT SELECTED	0/91
COOPERATIVE POWER N/D	1	NEW	750.	LIMESTONE VENDOR NOT SELECTED	0/94
DELMARVA POWER & LIGHT VIENNA	9	NEW	550.	PROCESS NOT SELECTED VENDOR NOT SELECTED	0/95
DESERET GEN & TRANS BONANZA	2	NEW	410.	LIMESTONE VENDOR NOT SELECTED	0/92
FLORIDA POWER & LIGHT MARTIN	3	NEW	800.	PROCESS NOT SELECTED VENDOR NOT SELECTED	0/94
FLORIDA POWER & LIGHT MARTIN	4	NEW	800.	PROCESS NOT SELECTED VENDOR NOT SELECTED	0/95
GENERAL PUBLIC UTILITIES COAL	1	NEW	690.	LIMESTONE VENDOR NOT SELECTED	0/93

SECTION 11
SUMMARY OF PLANNED FGD SYSTEMS

COMPANY NAME/ UNIT NAME	UNIT NO.	NEW OR RETROFIT	CAPACITY MW	PROCESS/ SYSTEM SUPPLIER	START-UP DATE
GENERAL PUBLIC UTILITIES COAL	2	NEW	690.	LIMESTONE VENDOR NOT SELECTED	0/97
INDIANAPOLIS POWER & LIGHT PATRIOT	1	NEW	650.	LIMESTONE VENDOR NOT SELECTED	0/93
INDIANAPOLIS POWER & LIGHT PATRIOT	2	NEW	650.	LIMESTONE VENDOR NOT SELECTED	0/ 0
INDIANAPOLIS POWER & LIGHT PATRIOT	3	NEW	650.	LIMESTONE VENDOR NOT SELECTED	0/ 0
KENTUCKY UTILITIES HANCOCK	2	NEW	650.	LIMESTONE VENDOR NOT SELECTED	99/99
LOWER COLORADO RIVER AUTH FAYETTE POWER PROJECT	4	NEW	451.	LIMESTONE VENDOR NOT SELECTED	6/90
NEBRASKA PUBLIC POWER DISTRICT FOSSIL III	1	NEW	650.	PROCESS NOT SELECTED VENDOR NOT SELECTED	3/96
NEVADA POWER HARRY ALLEN	1	NEW	500.	PROCESS NOT SELECTED VENDOR NOT SELECTED	0/94
NEVADA POWER HARRY ALLEN	2	NEW	500.	PROCESS NOT SELECTED VENDOR NOT SELECTED	0/95
NEVADA POWER HARRY ALLEN	3	NEW	500.	PROCESS NOT SELECTED VENDOR NOT SELECTED	0/96
NEVADA POWER HARRY ALLEN	4	NEW	500.	PROCESS NOT SELECTED VENDOR NOT SELECTED	0/97
PUBLIC SERVICE OF NEW MEXICO NEW MEXICO	1	NEW	500.	PROCESS NOT SELECTED VENDOR NOT SELECTED	0/95
PUB. SER. CO. OF COLORADO PAWNEE	2	NEW	500.	TRONA/DRY INJECTION VENDOR NOT SELECTED	0/90
SALT RIVER PROJECT CORONADO	3	NEW	280.	LIMESTONE VENDOR NOT SELECTED	0/92
SAN ANTONIO PUBLIC SERVICE N/D	1	NEW	500.	LIMESTONE VENDOR NOT SELECTED	0/93
SAN ANTONIO PUBLIC SERVICE N/D	2	NEW	500.	LIMESTONE VENDOR NOT SELECTED	0/95
SAN ANTONIO PUBLIC SERVICE N/D	3	NEW	500.	LIMESTONE VENDOR NOT SELECTED	0/99
SAN ANTONIO PUBLIC SERVICE N/D	4	NEW	500.	LIMESTONE VENDOR NOT SELECTED	99/99
SEMINOLE ELECTRIC TAYLOR	1	NEW	620.	PROCESS NOT SELECTED VENDOR NOT SELECTED	99/99
SEMINOLE ELECTRIC TAYLOR	2	NEW	620.	PROCESS NOT SELECTED VENDOR NOT SELECTED	99/99
SIERRA PACIFIC POWER THOUSAND SPRINGS	1	NEW	500.	PROCESS NOT SELECTED VENDOR NOT SELECTED	0/90
SIERRA PACIFIC POWER THOUSAND SPRINGS	2	NEW	500.	PROCESS NOT SELECTED VENDOR NOT SELECTED	0/95
SIERRA PACIFIC POWER THOUSAND SPRINGS	3	NEW	500.	PROCESS NOT SELECTED VENDOR NOT SELECTED	0/99

SECTION 11
SUMMARY OF PLANNED FGD SYSTEMS

COMPANY NAME/ UNIT NAME	UNIT NO.	NEW OR RETROFIT	CAPACITY MW	PROCESS/ SYSTEM SUPPLIER	START-UP DATE
SOUTHWESTERN ELECTRIC POWER WALKER CO.	1	NEW	720.	PROCESS NOT SELECTED VENDOR NOT SELECTED	12/93
SOUTHWESTERN ELECTRIC POWER WALKER CO.	2	NEW	720.	PROCESS NOT SELECTED VENDOR NOT SELECTED	12/93
SOUTHWESTERN PUBLIC SERVICE SOUTH PLAINS	1	NEW	572.	PROCESS NOT SELECTED VENDOR NOT SELECTED	0/90
TUCSON ELECTRIC POWER SPRINGERVILLE	3	NEW	370.	PROCESS NOT SELECTED VENDOR NOT SELECTED	0/91
WASHINGTON WATER POWER CRESTON COAL	1	NEW	570.	LIMESTONE VENDOR NOT SELECTED	0/95
WASHINGTON WATER POWER CRESTON COAL	2	NEW	570.	LIMESTONE VENDOR NOT SELECTED	0/97
WASHINGTON WATER POWER CRESTON COAL	3	NEW	570.	LIMESTONE VENDOR NOT SELECTED	0/98
WASHINGTON WATER POWER CRESTON COAL	4	NEW	570.	LIMESTONE VENDOR NOT SELECTED	0/99
WEST TEXAS UTILITIES OKLAUNION	2	NEW	504.	PROCESS NOT SELECTED VENDOR NOT SELECTED	0/96
WHITE PINE COUNTY WHITE PINE PWR PROJ.	1	NEW	820.	PROCESS NOT SELECTED VENDOR NOT SELECTED	3/91
WHITE PINE COUNTY WHITE PINE PWR PROJ.	2	NEW	820.	PROCESS NOT SELECTED VENDOR NOT SELECTED	3/92
TOTAL			26869.		

SECTION 12
TOTAL FGD UNITS AND CAPACITY (MW) INSTALLED BY YEAR

YEAR	NEW ON LINE NO.	NEW ON LINE MW	TERMINATED NO.	TERMINATED MW	TOTAL ON LINE NO.	TOTAL ON LINE MW
1968	1	140.	0	0.	1	140.
1969	0	0.	1	140.	0	0.
1971	1	80.	0	0.	1	80.
1972	10	1548.	0	0.	11	1628.
1973	5	854.	1	10.	15	2472.
1974	4	586.	3	340.	16	2718.
1975	9	2279.	5	628.	20	4369.
1976	7	2709.	4	1014.	23	6064.
1977	11	4727.	2	215.	32	10576.
1978	15	5544.	0	0.	47	16120.
1979	19	5824.	2	143.	64	21801.
1980	20	6817.	0	0.	84	28618.
1981	11	4397.	1	20.	94	32995.
1982	17	6410.	7	825.	104	38580.
1983	16	6233.	1	100.	119	44713.
1984	9	4985.	0	0.	128	49698.
1985	9	4577.	0	0.	137	54275.
1986	7	3875.	0	0.	144	58150.
1987	6	3311.	0	0.	150	61461.
1988	5	3110.	0	0.	155	64571.
1989	5	3210.	0	0.	160	67781.
1990	7	3838.	0	0.	167	71619.
1991	5	3776.	0	0.	172	75395.
1992	5	2720.	0	0.	177	78115.
1993	7	4650.	0	0.	184	82765.
1994	3	2050.	0	0.	187	84815.
1995	8	4520.	0	0.	195	89335.
1996	3	1654.	0	0.	198	90989.
1997	4	1886.	0	0.	202	92875.
1998	1	570.	0	0.	203	93445.
1999	12	7330.	0	0.	215	100775.
UNDEFINED	2	1300.				

APPENDIX A

DEFINITIONS

DEFINITIONS

Boiler Commercial Service Date	Date when boiler and auxiliary equipment (including FGD system for new boilers) has met initial supplier guarantees and begins to contribute electrical power to the power grid.
Byproduct Nature	The nature (e.g. elemental sulfur, sulfuric acid) and disposition (e.g. stockpile on site, marketed) of the end product by systems that generate a saleable product.
Commercial Service Date (FGD System)	Date when the FGD system successfully completes compliance testing and the utility is satisfied that the system meets supplier contractual guarantees.
Company Name	Name of corporation as it appears in Electrical World - Directory of Electrical Utilities, McGraw-Hill - Current Edition - as space permits.
Disposal	Disposal method for throwaway product systems producing sludge including: interim and final disposal sites and disposal type (minefill, landfill, etc.) as well as disposal location and site capacity.
Efficiency:	
Total Unit Design Particle Removal Efficiency	The actual percentage of particulate matter removed by the emission control system (mechanical collectors, ESP, or fabric filter and FGD) from the untreated flue gas.
Total Unit SO_2 Design Removal Efficiency	The actual percentage of SO_2 removed from the flue gas by the FGD system.

FGD Viability Indexes

Several parameters have been developed to quantify the viability of FGD system technology. Various terms such as "availability," "reliability," "operability," and "utilization" are used to accurately represent the operation of any FGD system during a given period. The above-mentioned parameters are defined below and discussed briefly. The objectives of this discussion are to make the reader aware that several different definitions are being used and to select appropriate parameters that can be used for reporting purposes so that reasonably consistent comparisons can be made.

Availability Index

Hours the FGD system is available for operation (whether operated or not) divided by hours in period, expressed as a percentage. This parameter tends to overestimate the viability of the FGD system because it does not penalize for election not to operate the system when it could have been operated. Boiler downtime may tend to increase the magnitude of the parameter because FGD failures generally cannot occur during such periods.

Reliability Index

Hours the FGD system was operated divided by the hours the FGD system was called upon to operate, expressed as a percentage. This parameter has been developed in order not to penalize the FGD system for elected outages, e.g., periods when the FGD system could have been run but was not run because of chemical shortages, lack of manpower, short duration boiler operations, etc. The main problem in using this

	formula is the concise determination whether or not the system was "called upon to operate" during a given time period. In addition, an undefined value can result when the FGD system is not called upon to operate for a given period (e.g., turbine or boiler outage when FGD system is available).
FGD Operability Index	Hours the FGD system was operated divided by boiler operating hours in period, expressed as a percentage. This parameter indicates the degree to which the FGD system is actually used, relative to boiler operating time. The parameter is penalized when options are exercised not to use the FGD system in periods when the system is operable. In addition, an undefined value can result when neither the boiler nor the FGD system is operated for a given period (e.g., turbine or boiler outage when FGD system is available).
FGD Utilization Index	Hours that the FGD system operated divided by total hours in period. This parameter is a relative stress factor for the FGD system. It is not a complete measure of FGD system viability because the parameter can be strongly influenced by conditions that are external to the FGD system (e.g., infrequent boiler operation will lower the value of the parameter although the FGD system may be highly dependable in its particular application).
End Product	
Sludge	The SO_2 removed from the flue gas is not recovered in a usable or marketable form and resulting sulfur-bearing waste

	products must be disposed in an environmentally acceptable fashion.
Recoverable Byproduct	The SO_2 removed from the flue gas is recovered in a usable or marketable form (e.g., sulfur, sulfuric acid, gypsum, ammonium sulfate, sodium sulfate).
Energy Consumption, %	The percentage of gross unit electrical generating capacity consumed by the FGD system, as defined by the following equation: [Net MW w/o FGD - Net MW w/FGD]/ [Gross unit rating]
Equivalent Scrubbed Capacity (ESC)	The effective scrubbed flue gas in equivalent MW based on the percent of flue gas scrubbed by the FGD system.
FGD Status:	
Category 1	Operational - FGD system is in service removing SO_2.
Category 2	Under construction - ground has been broken for installation of FGD system, but FGD system has not become operational.
Category 3	Planned, Contract Awarded - contract has been signed for purchase of FGD system but ground has not been broken for installation.
Cateogry 4	Planned, Letter of Intent Signed - letter of intent has been signed, but legal contract for purchase has not been awarded.
Category 5	Planned, Requesting/Evaluating Bids - bid requests have been released but no letter of intent or contract has been issued.

Category 6	Considering only FGD Systems - an FGD system is proposed as a means to meet an SO_2 regulation.
Category 7	Considering an FGD system as well as alternative methods.
Category 8	Nonoperational - FGD system has been operated in the past but has been shut down permanently or for an extended indefinite period of time.
Fuel Firing Rate - TPH	Boiler fuel firing rate in terms of tons per hour at maximum continuous load.
Initial Start-Up (FGD System)	Date when flue gas first passes through any component of the FGD system (or is scheduled to do so).
NA	Not available - early status - information not known at this time.
N/A	Not applicable.
NR	Not reported - the information is known but for one reason or another has not been reported by the utility.
New	FGD unit and boiler were designed at the same time or space for addition of an FGD unit was reserved when boiler was constructed.
Plant Name	Unit identification as it appears in Electrical World - Directory of Electrical Utilities, McGraw-Hill - Current Edition - or as indicated by utility representative for installations in planning stages.
Process Additives	A chemical compound or element which is added to the process or normally found with the main process reagent in small

	quantities (e.g., Mg, adipic acid) to promote improved process operation (e.g., scale reduction, increased SO_2 removal efficiency).
Process Type	Company name if process is patented. Generic name if several companies have similar processes (e.g., Lime, Limestone, Wellman Lord, Thoroughbred 121).
Regulatory Class	A. Unit(s) subject to standard(s) more stringent than NSPS (6/79). B. Unit(s) subject to Federal New Source Performance Standards (NSPS) promulgated in June 1979. C. Unit(s) subject to standard(s) more stringent than NSPS (12/71), but not more stringent than NSPS (6/79). D. Unit(s) subject to Federal New Source Performance Standards (NSPS) promulgated in December 1971. E. Unit(s) subject to standard(s) equal to or less stringent than NSPS (12/71).
Retrofit	FGD unit will be/was added to an existing boiler not specifically designed to accommodate FGD unit.
SO_2 Removal Mode	The manner in which the SO_2 from the flue gas is collected, e.g., wet scrubbing, spray drying, dry adsorption.
Spare Capacity Index - %	The summation of the individual component capacities (%) minus 100%.

Spare Component Index	The equipment spare capacity index (%) divided by the individual component capacity (%).
System Supplier	A firm that fabricates and supplies flue gas desulfurization systems.
Total Controlled Capacity (TCC)	The gross rating (MW) of a unit brought into compliance with FGD, regardless of the percent of flue gas treated at the facility. In the case of prototype and demonstration FGD systems, this figure will be identical to the Equivalent Scrubbed Capacity rather than the gross unit rating if the system is not meant to bring the facility into compliance with SO_2 emission standards.
Unit Rating	
Gross	Operational - Maximum continuous gross generation capacity in MW; Preoperational - maximum continuous design generation capacity in MW.
Net w/FGD	Gross unit rating less the energy required to operate ancillary station equipment, inclusive of emission control systems.
Net w/o FGD	Gross unit rating less the energy required to operate ancillary station equipment, exclusive of emission control systems.

APPENDIX B

TABLE OF UNIT NOTATION

TABLE OF UNIT NOTATION

Classification	English Unit	Symbol	Survey Report Notation	ASTM/SI Unit	Symbol	Survey Report Notation
Area	Acre	acre	ACRE	Square meter	M^2	SQ.M
	Square foot	ft^2	SQ.FT	Square meter	M^2	SQ.M
Concentration	Grains per standard cubic foot	gr/scf	GR/SCF	Grams per cubic meter	g/m^3	G/CU.M
	Parts per million	ppm	PPM	Parts per million	ppm	PPM
	Pounds per million Btu	$lb/10^6$ Btu	LB/MMBTU	Nanograms per joule	ng/J	NG/J
Flow	Actual cubic feet per minute	ft^3/min (actual)	ACFM	Cubic meters per second	m^3/s	CU.M/S
	Gallons per minute	gal/min	GPM	Liters per second	liter/s	LITER/S
	Pounds per minute	lb/min	LB/MIN	Kilogram per second	kg/s	KG/S
	Ton per day	t/day	TPD	Metric ton per day	M t/d	M T/D
	Ton per hour	t/h	TPH	Metric ton per hour	M t/h	M T/H
Heat Content	Btu per pound	Btu/lb	BTU/LB	Joules per gram	J/g	J/G
Length	Foot	ft	FT	Meter	m	M
	Inch	in	IN	Centimeter	cm	CM
	Mile	mi	MI	Kilometer	km	KM
L/G Ratio	Gallons per thousand actual cubic feet	gal/1000 ft^3 (actual)	GAL/1000ACF	Liters per cubic meter	$liter/m^3$	LITER/CU.M
Mass/Weight	Pound	lb	LB	Kilogram	kg	KG
	Ton	t	T	Megagram	Mg	MG
Pressure	Inches of water	in. H_2O	IN. H_2O	Kilopascal	kPa	KPA
Temperature	Degree Fahrenheit	°F	F	Degree Celsius	°C	C
Volume	Cubic feet	ft^3	CU.F	Cubic meter	m^3	CU.M
	Acre-feet	Acre-ft	ACRE-FT	Cubic meter	m^3	CU.M

APPENDIX C

FGD PROCESS FLOW DIAGRAMS

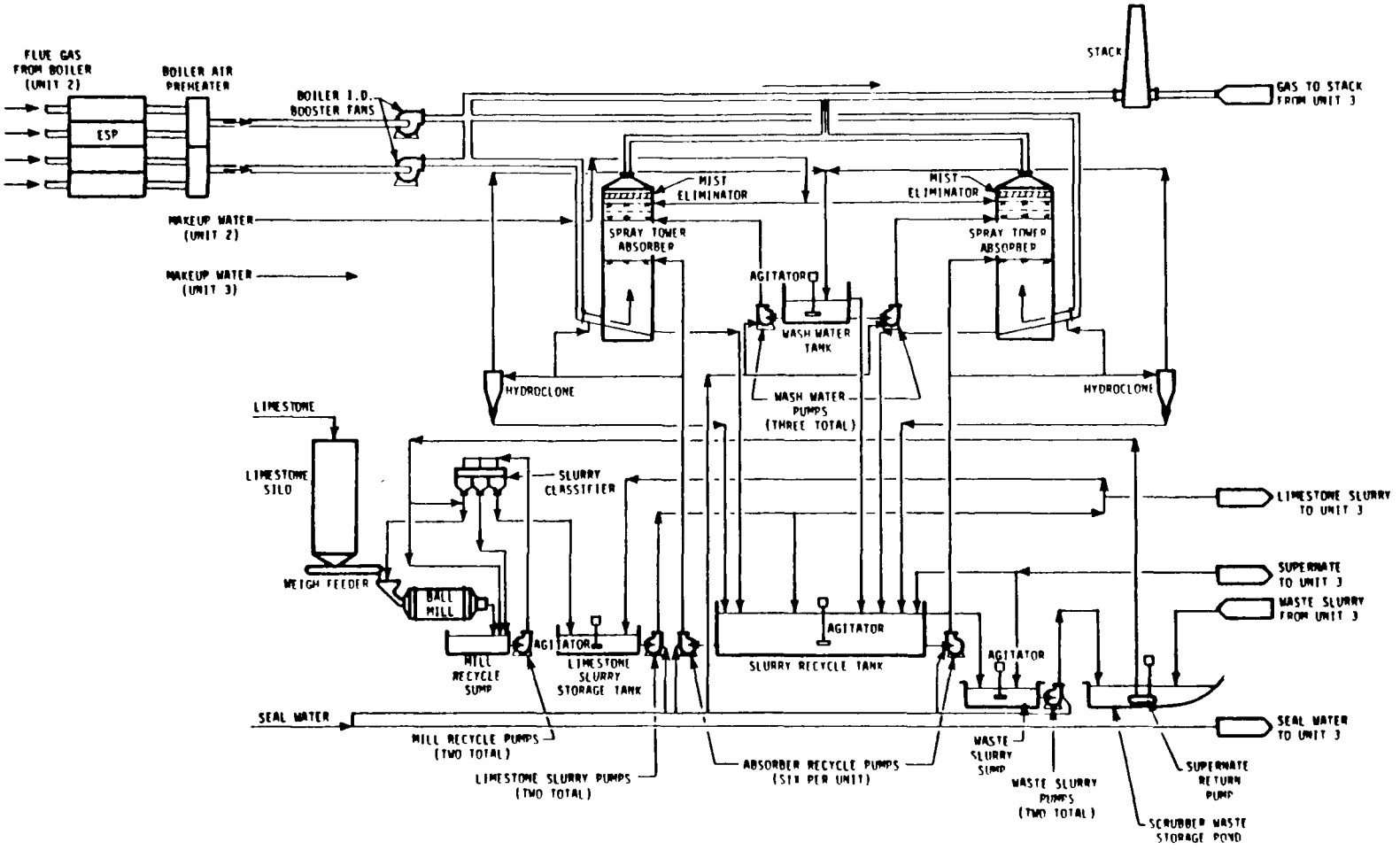

Alabama Electric,
Simplified Process Flow Diagram for Tombigbee 2 and 3

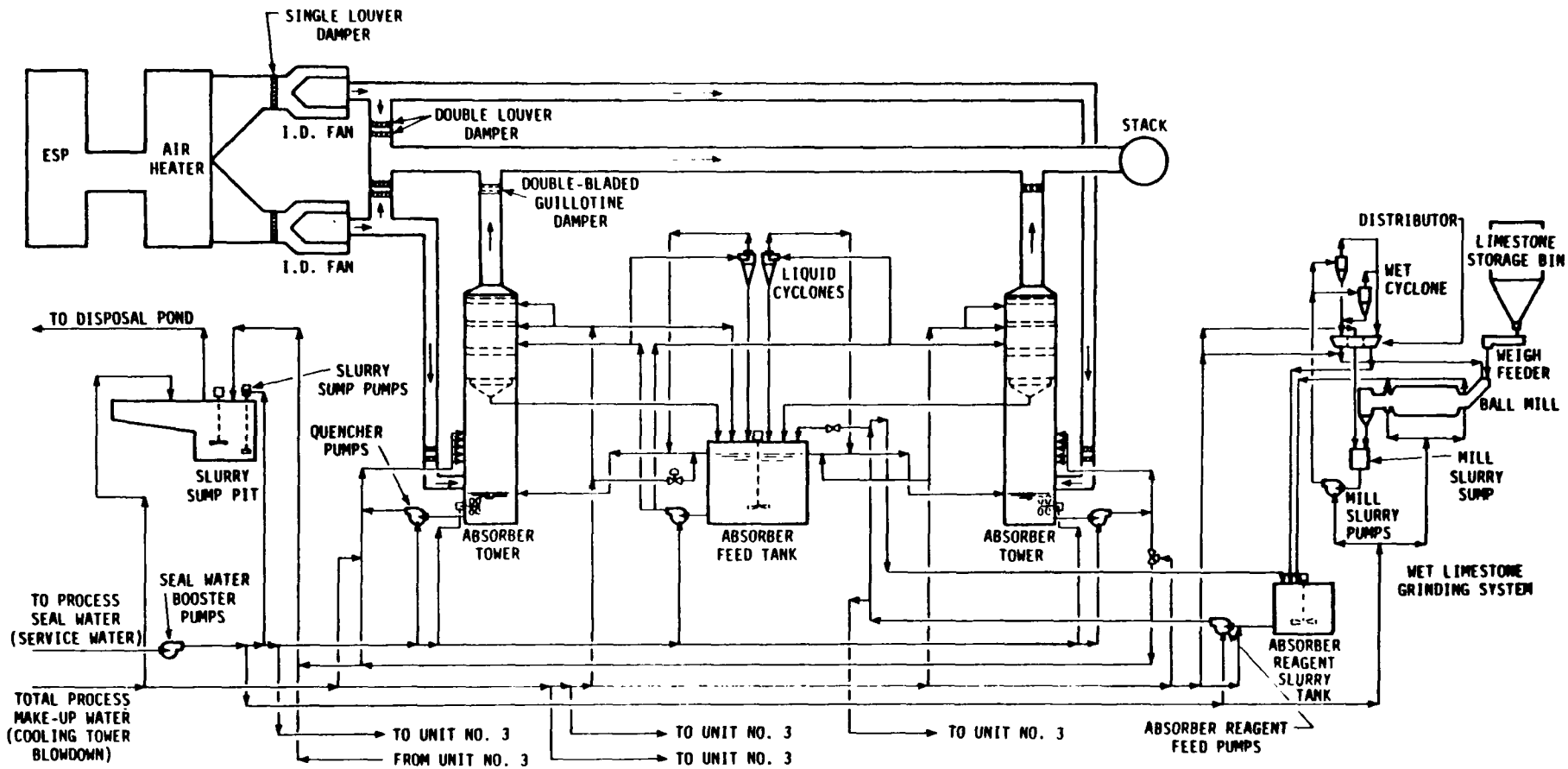

Arizona Electric Power Coop, Apache 2 and 3
Process Flow Diagram

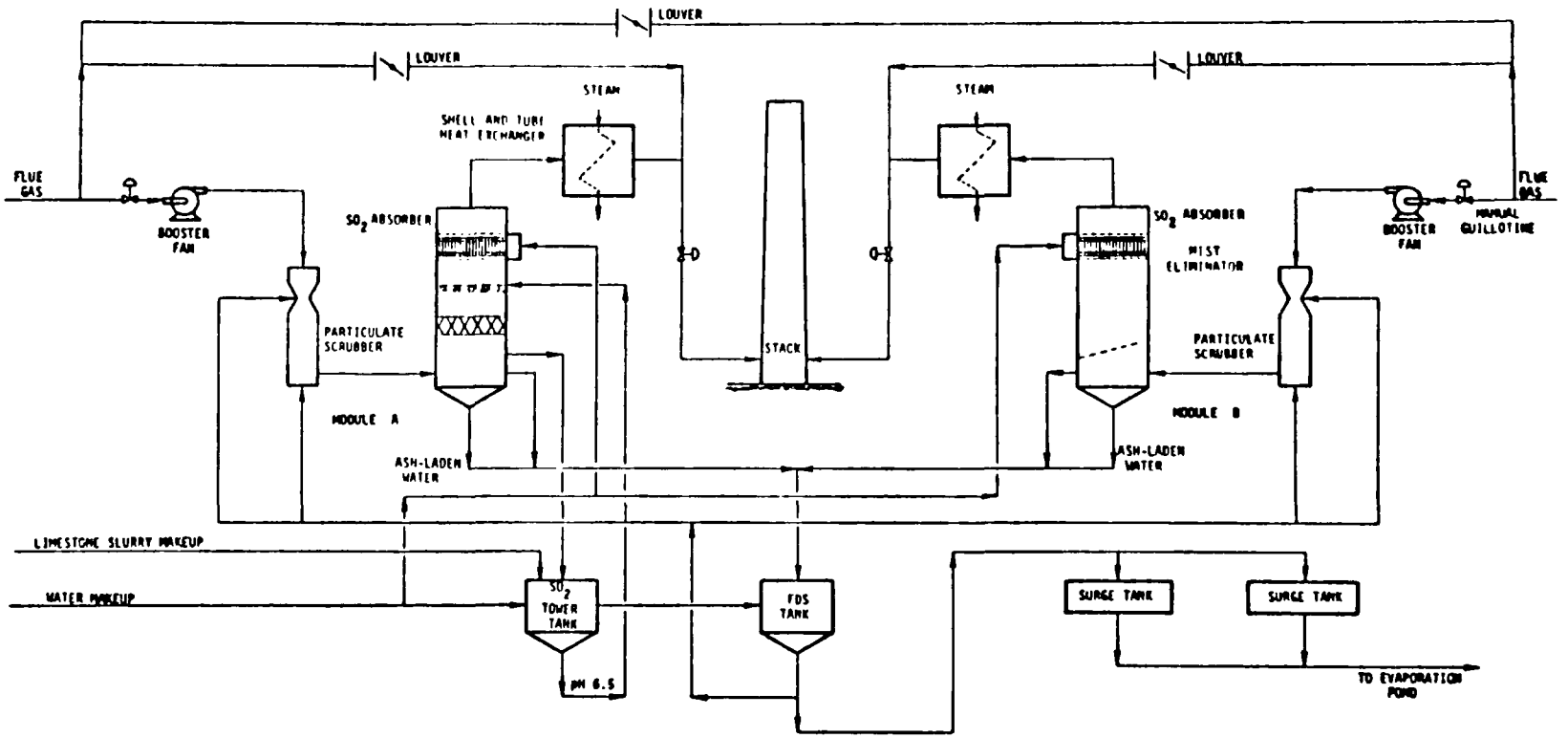

Arizona Public Service, Cholla 1:
Simplified Process Flow Diagram

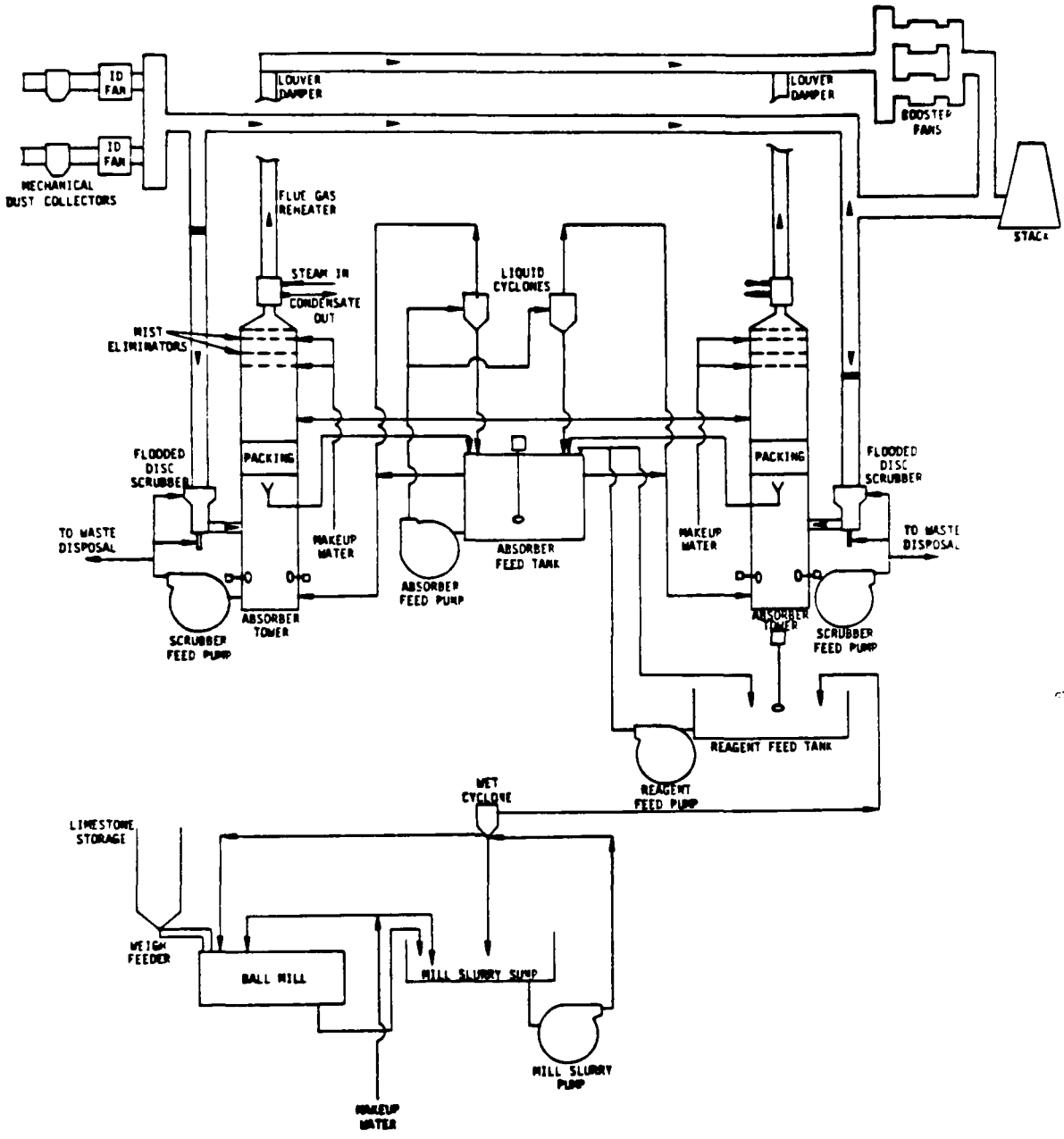

Arizona Public Service, Cholla 2:
Simplified Process Flow Diagram

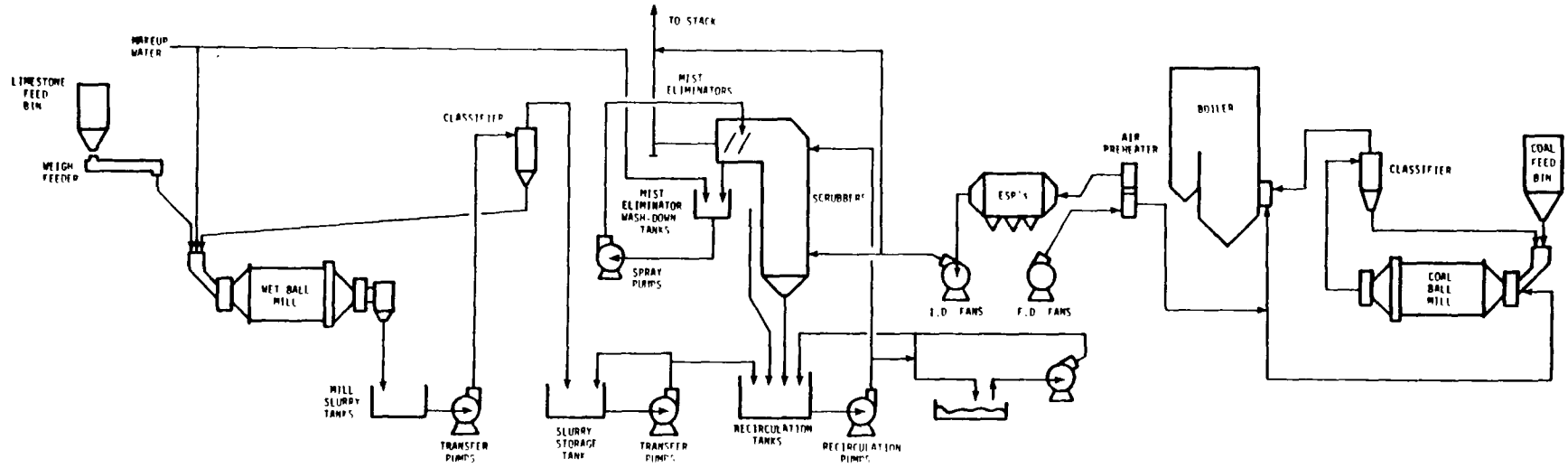

Central Illinois Light,
Simplified Process Flow Diagram of Duck Creek 1
Power Plant and Emission Control System

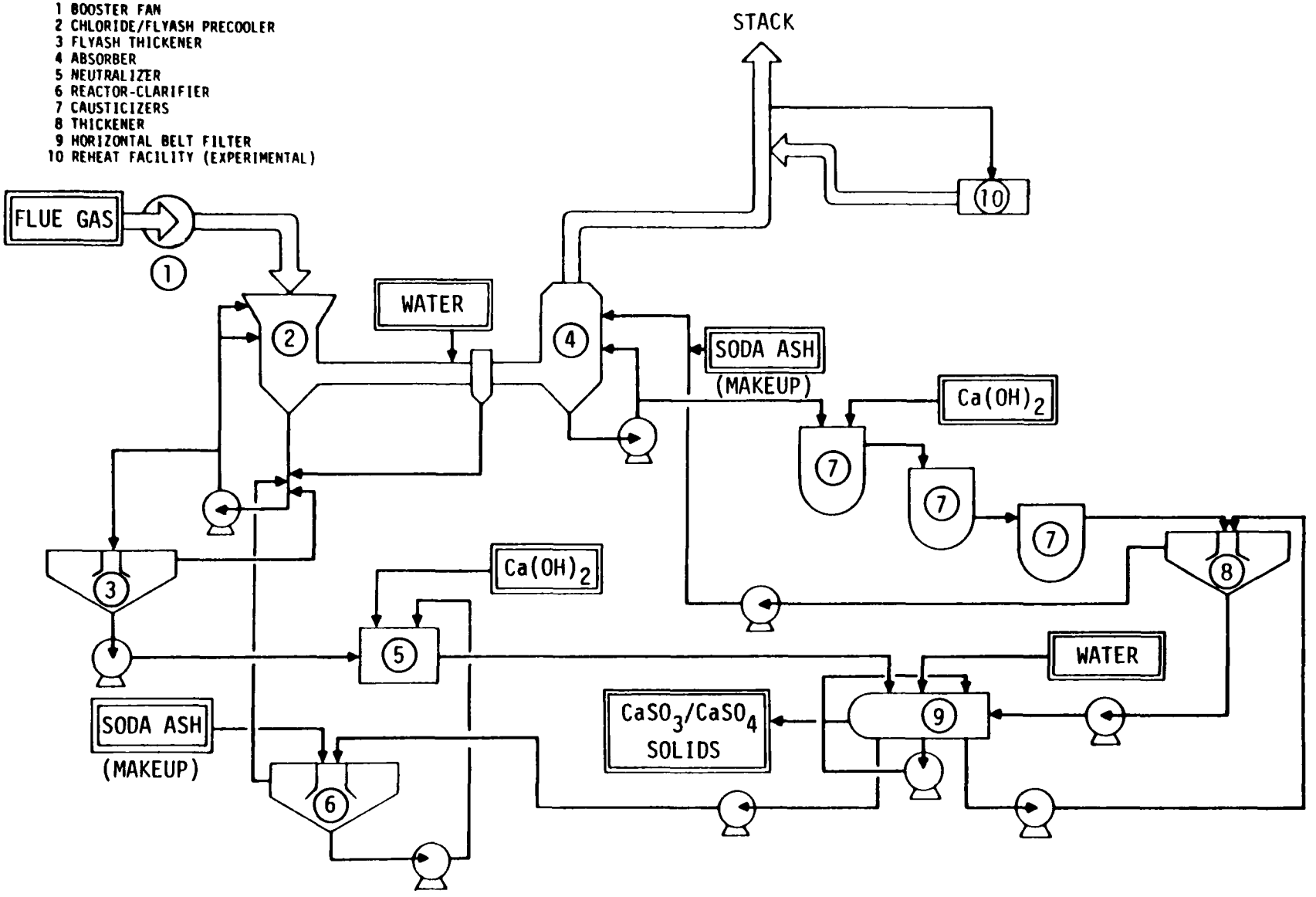

Central Illinois Public Service, Newton 1:
Simplified Process Flow Diagram Showing One of Four Absorbers

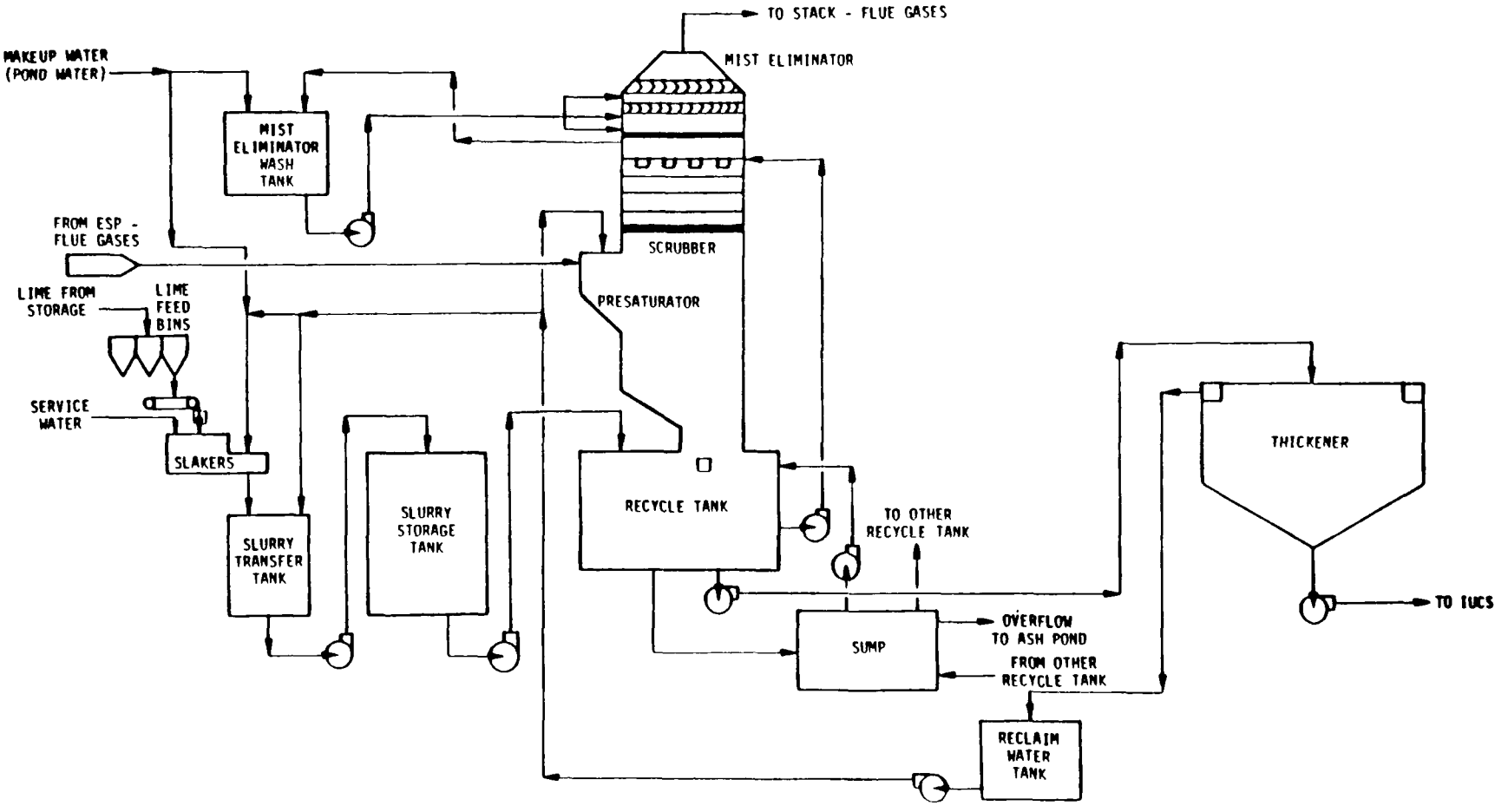

Columbus and Southern Ohio Electric, Conesville 5 and 6:
Simplified Process Flow Diagram for a Given Module

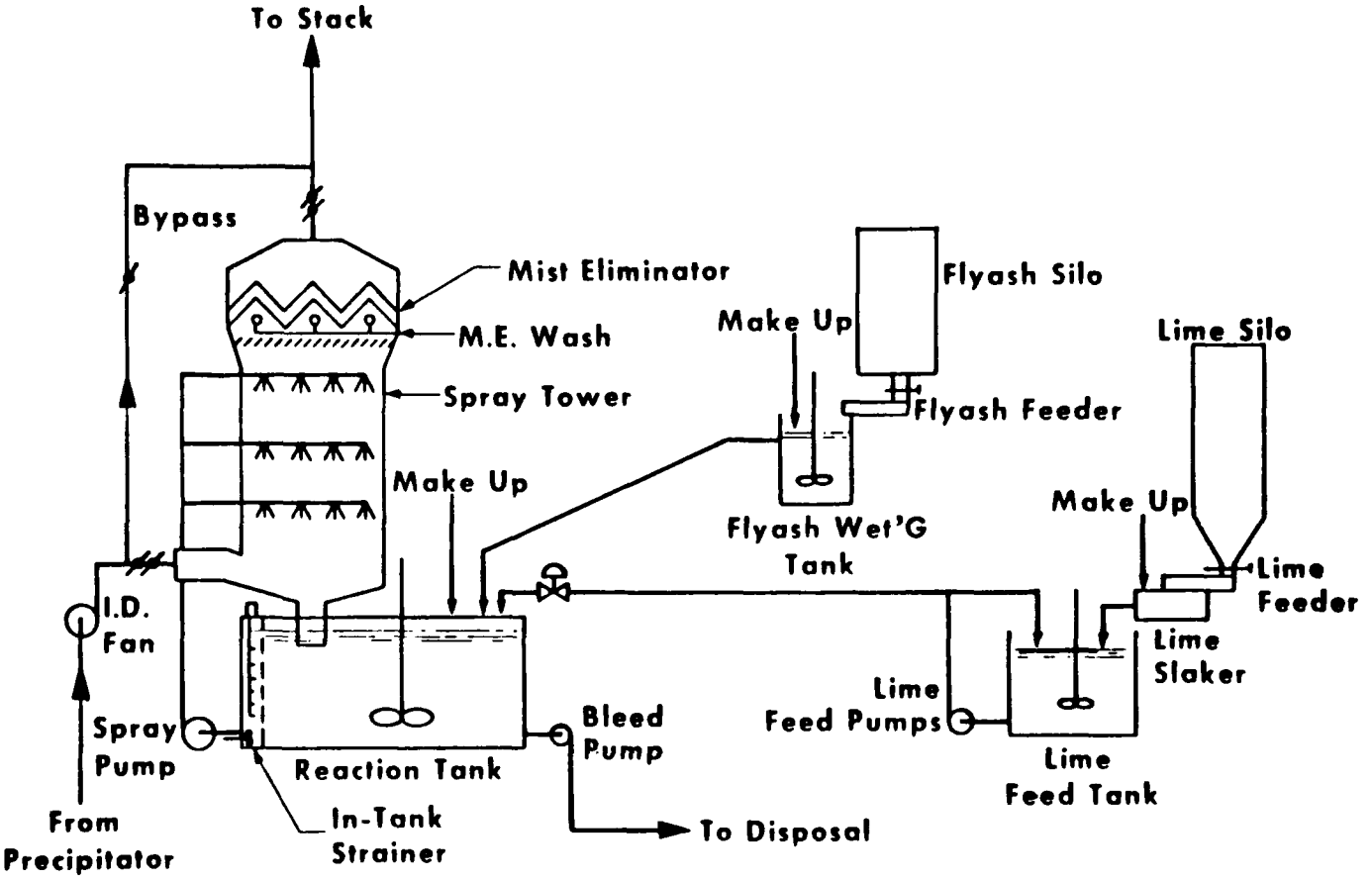

Cooperative Power Association, Coal Creek 1 and 2:
Simplified Process Flow Diagram

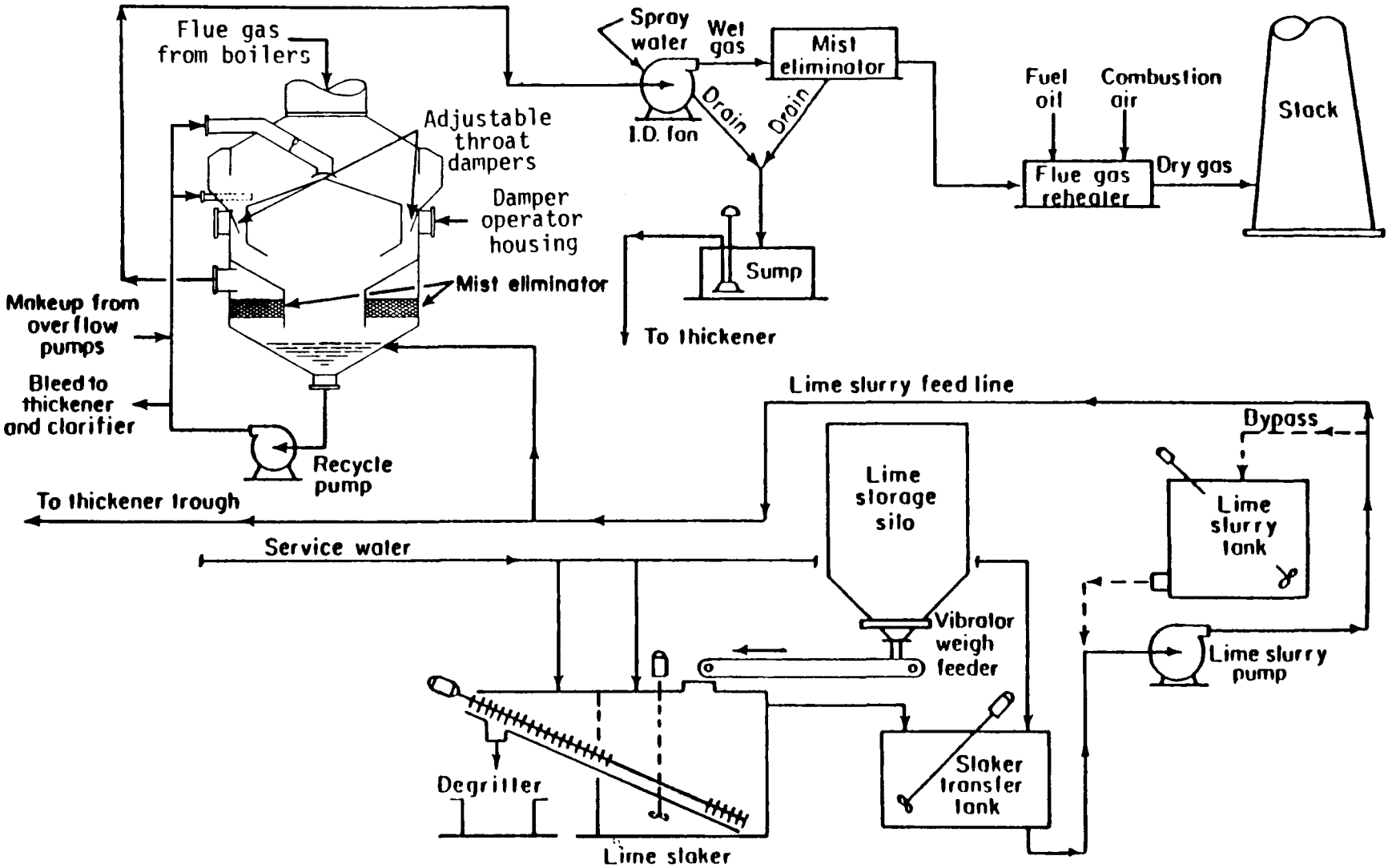

Duquesne Light, Elrama 1-4: Simplified Process Flow Diagram

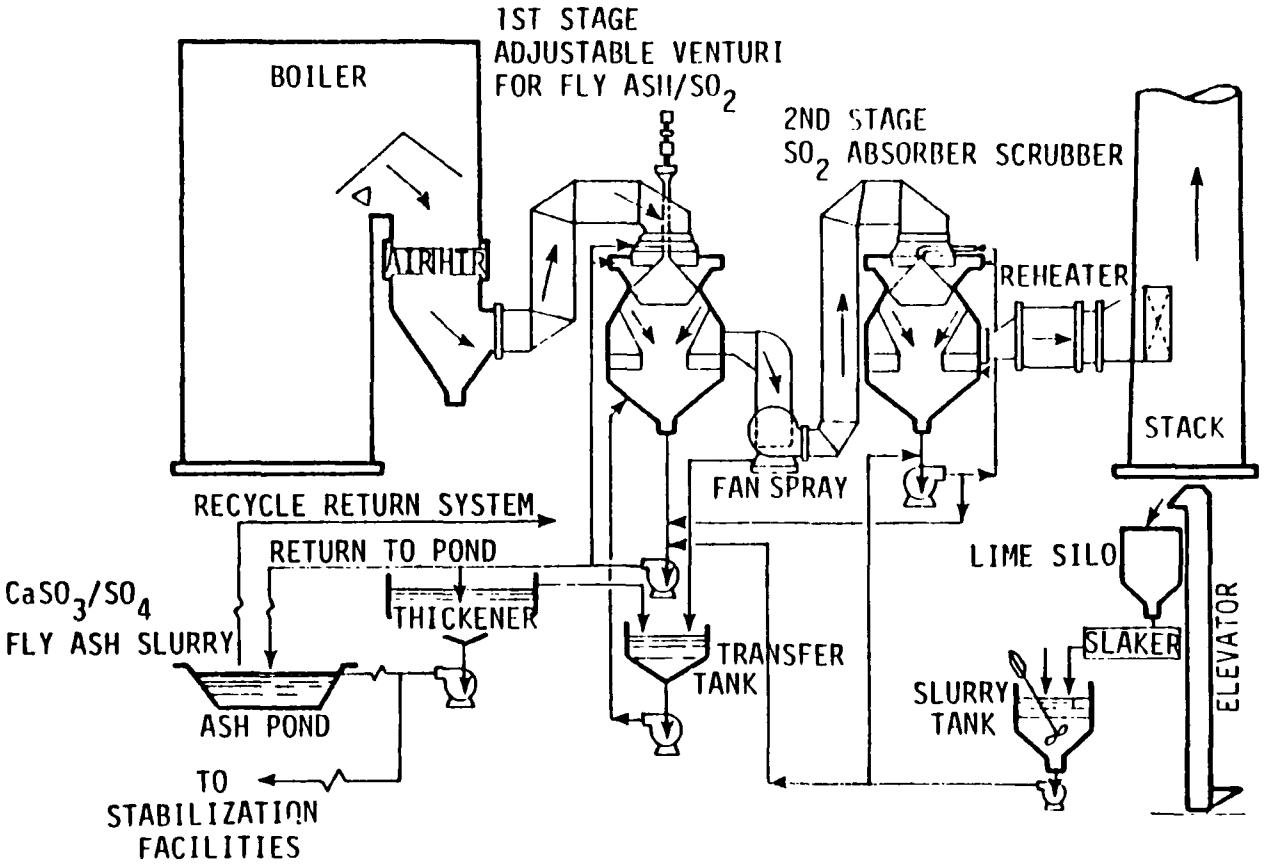

Duquesne Light, F. R. Phillips FGD System:
General Diagram.

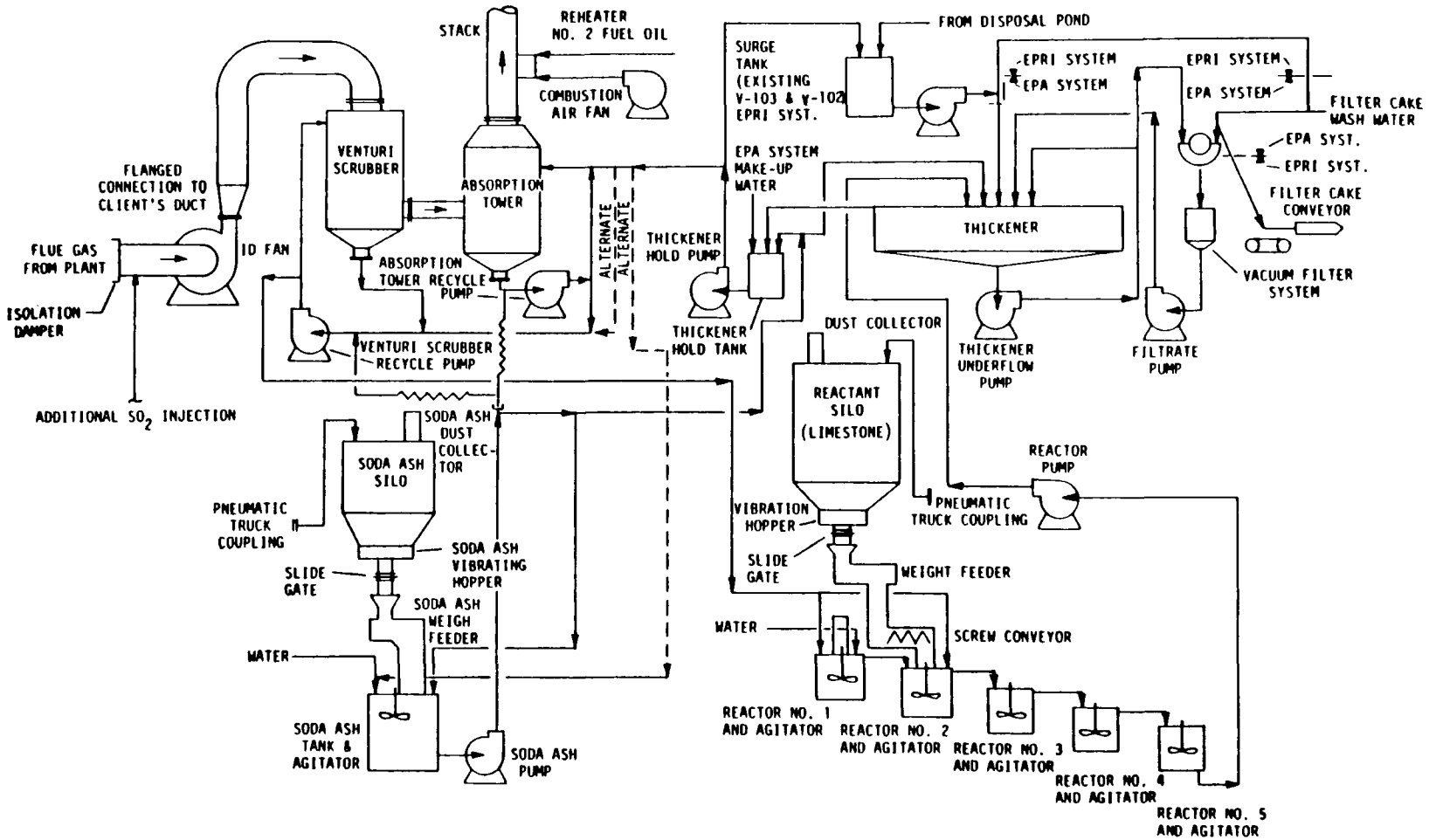

Gulf Power, Scholz 1:
Simplified Process Flow Diagram of the Demonstration
Soda Ash/Limestone Dual Alkali Process

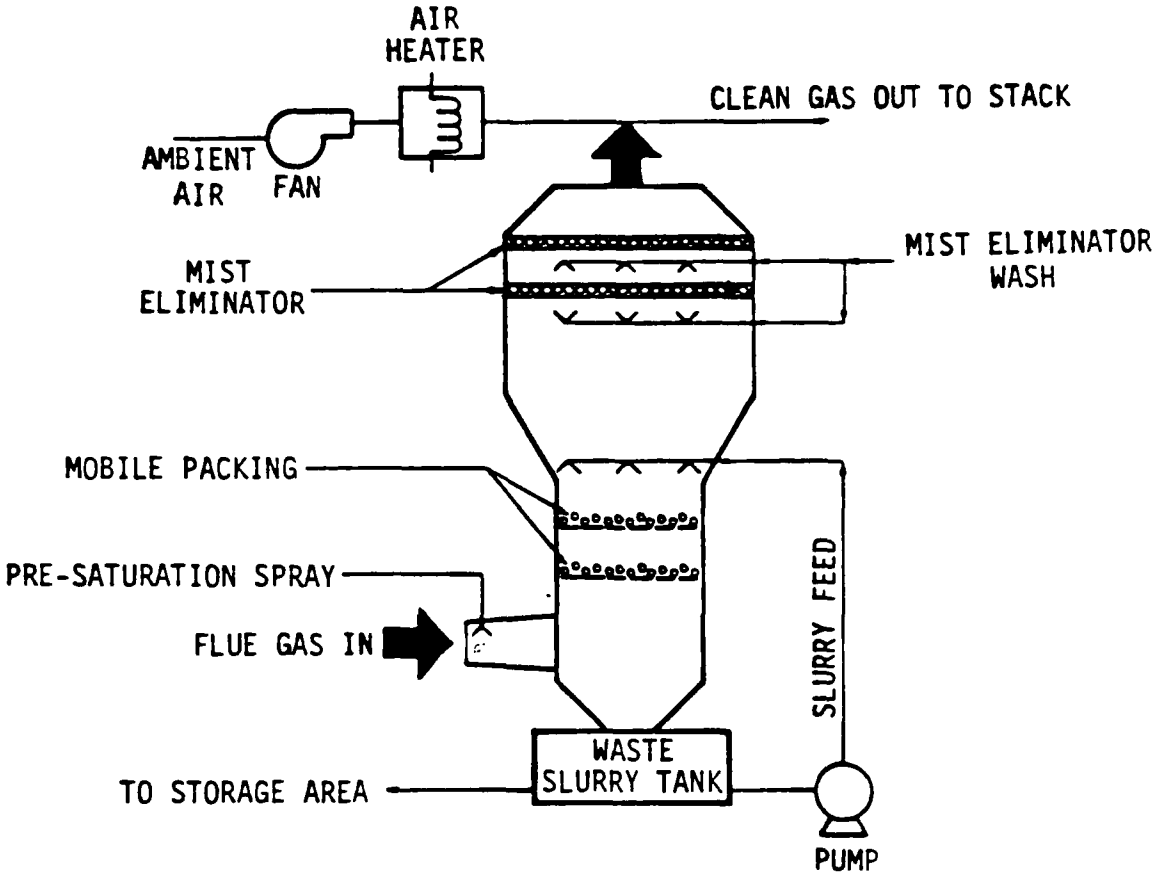

Indianapolis Power and Light, Petersburg 3:
Simplified Process Flow Diagram for One of Four Absorbers

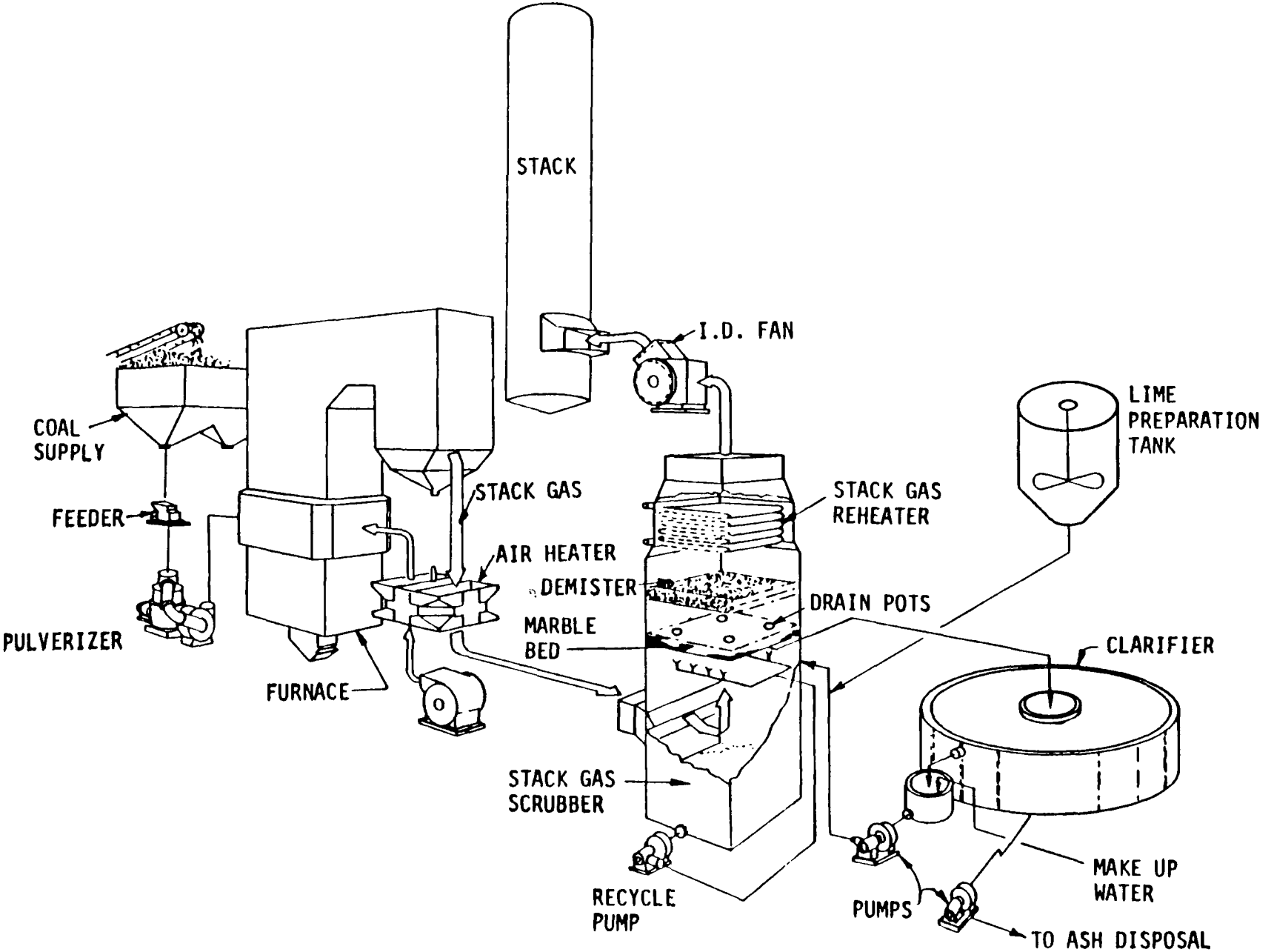

Kansas City Power and Light, Hawthorn Units 3 and 4:
Simplified Process Flow Diagram of the Lime Scrubbing Process

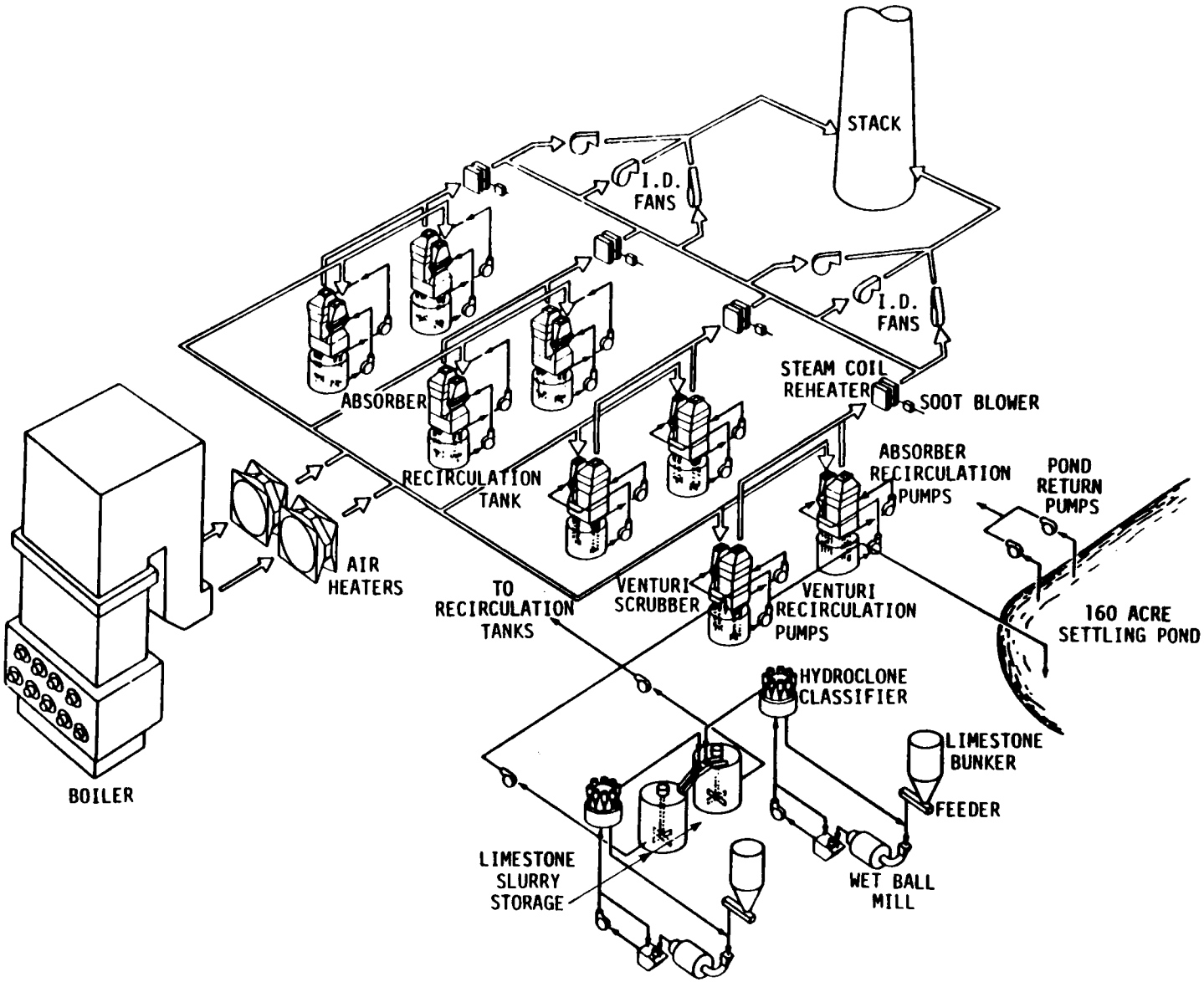

Kansas City Power and Light,
LaCygne 1 FGD System: General Diagram

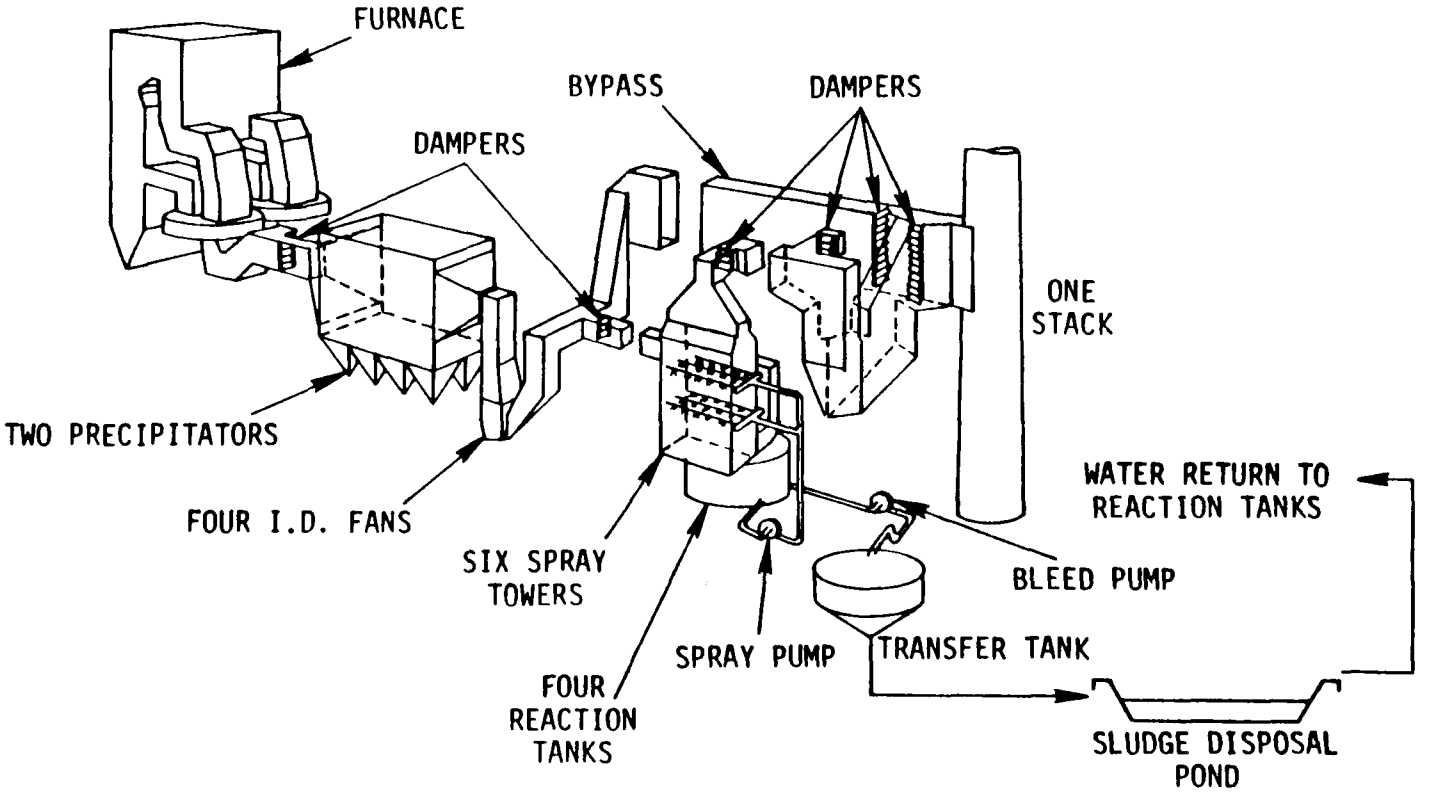

Kansas Power and Light,
Schematic of Jeffrey Steam Generator and Emission Control Equipment

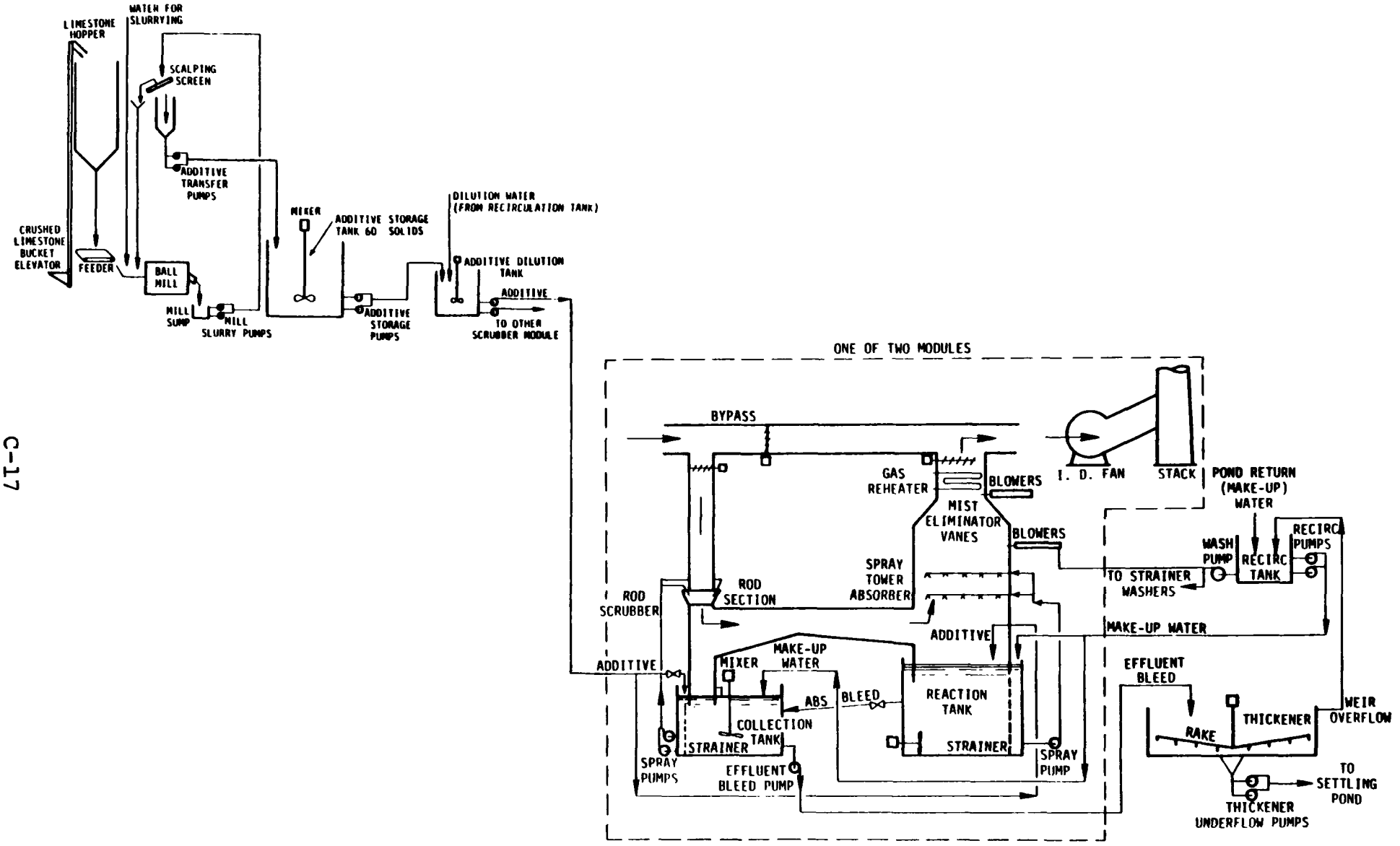

Kansas Power and Light,
Lawrence 4 Operational FGD System:
Simplified Process Flow Diagram

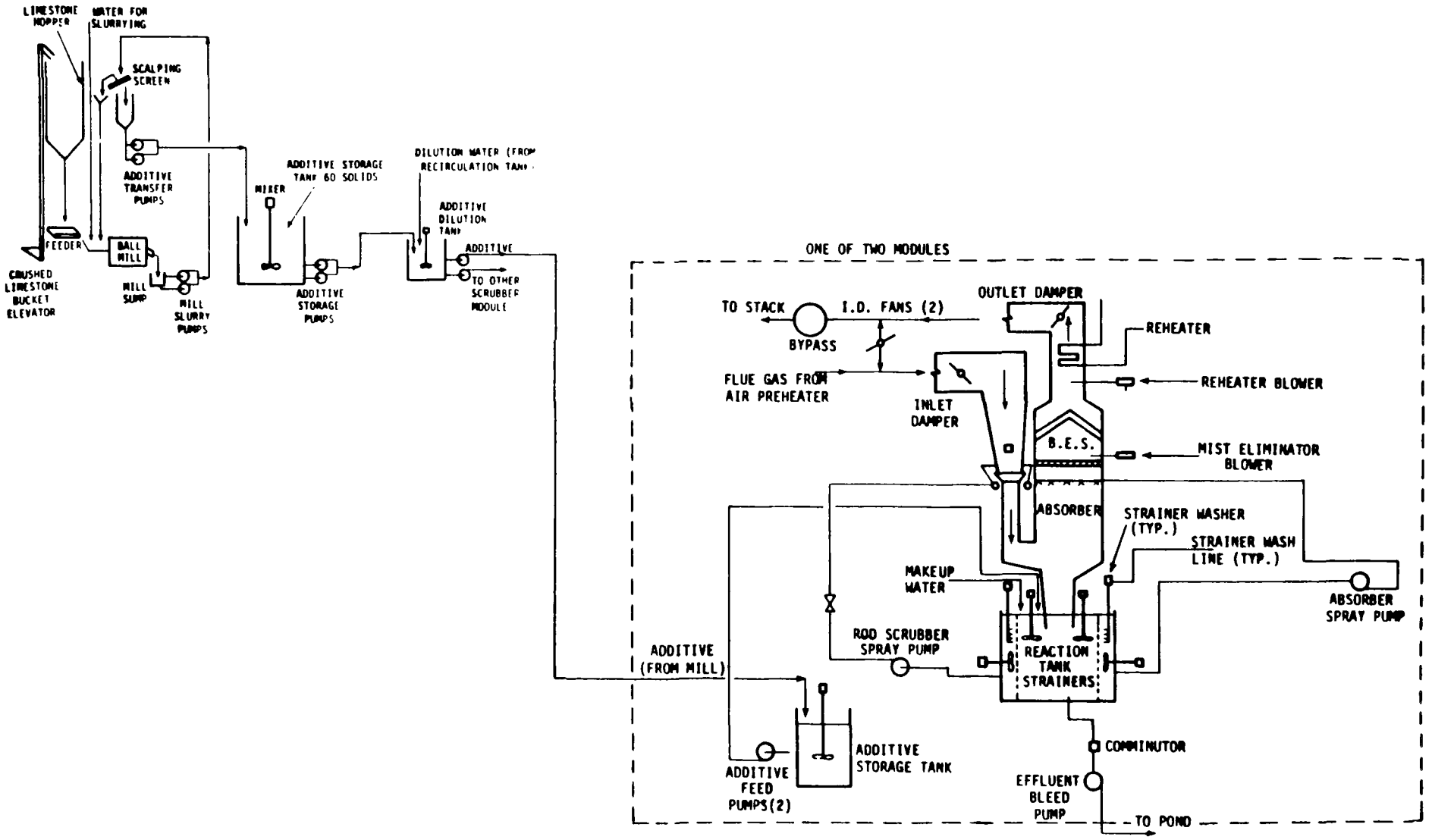

Kansas Power and Light,
Lawrence 5 Operational FGD System:
Simplified Process Flow Diagram

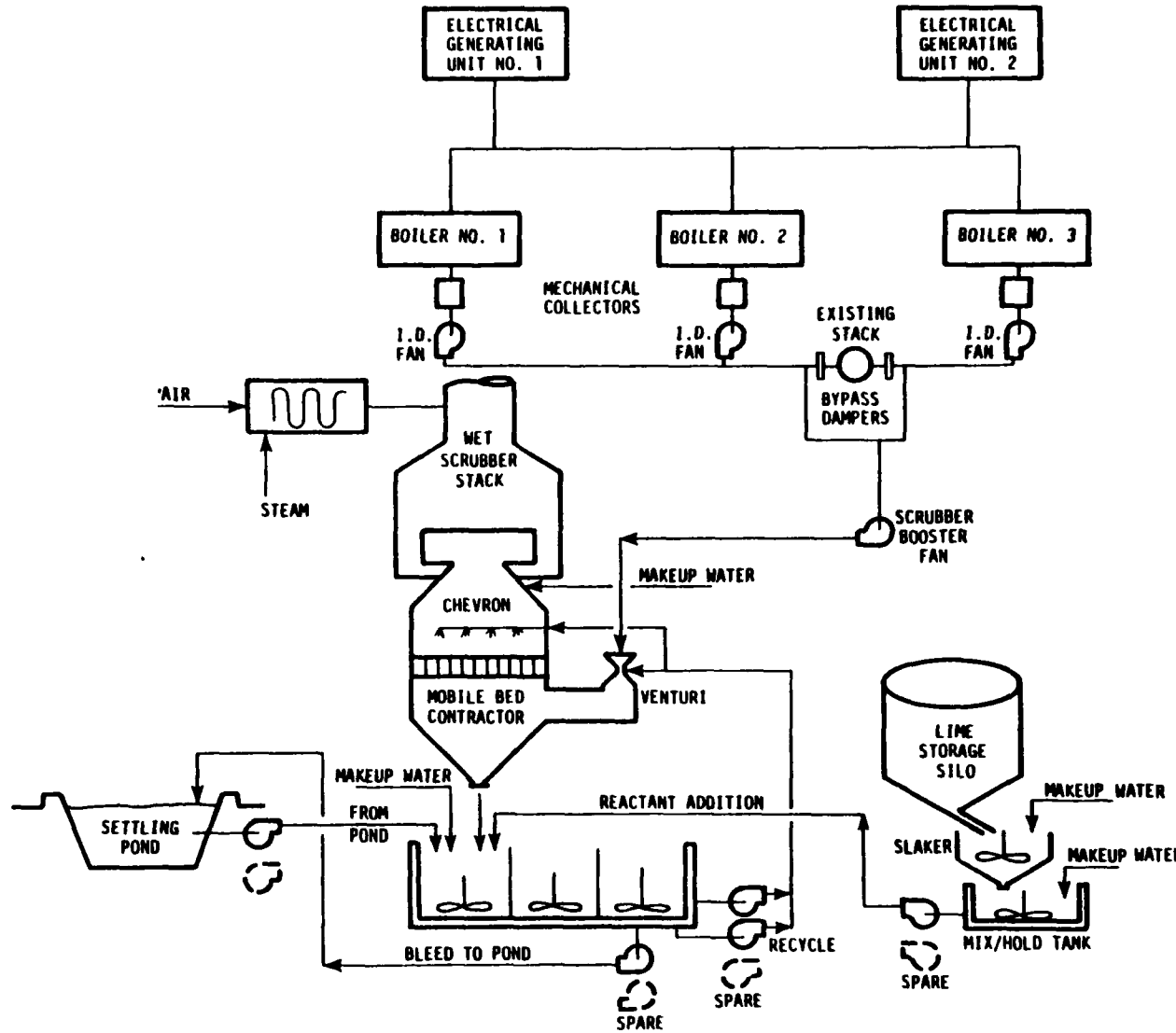

Kentucky Utilities,
Green River FGD System: General Process Diagram

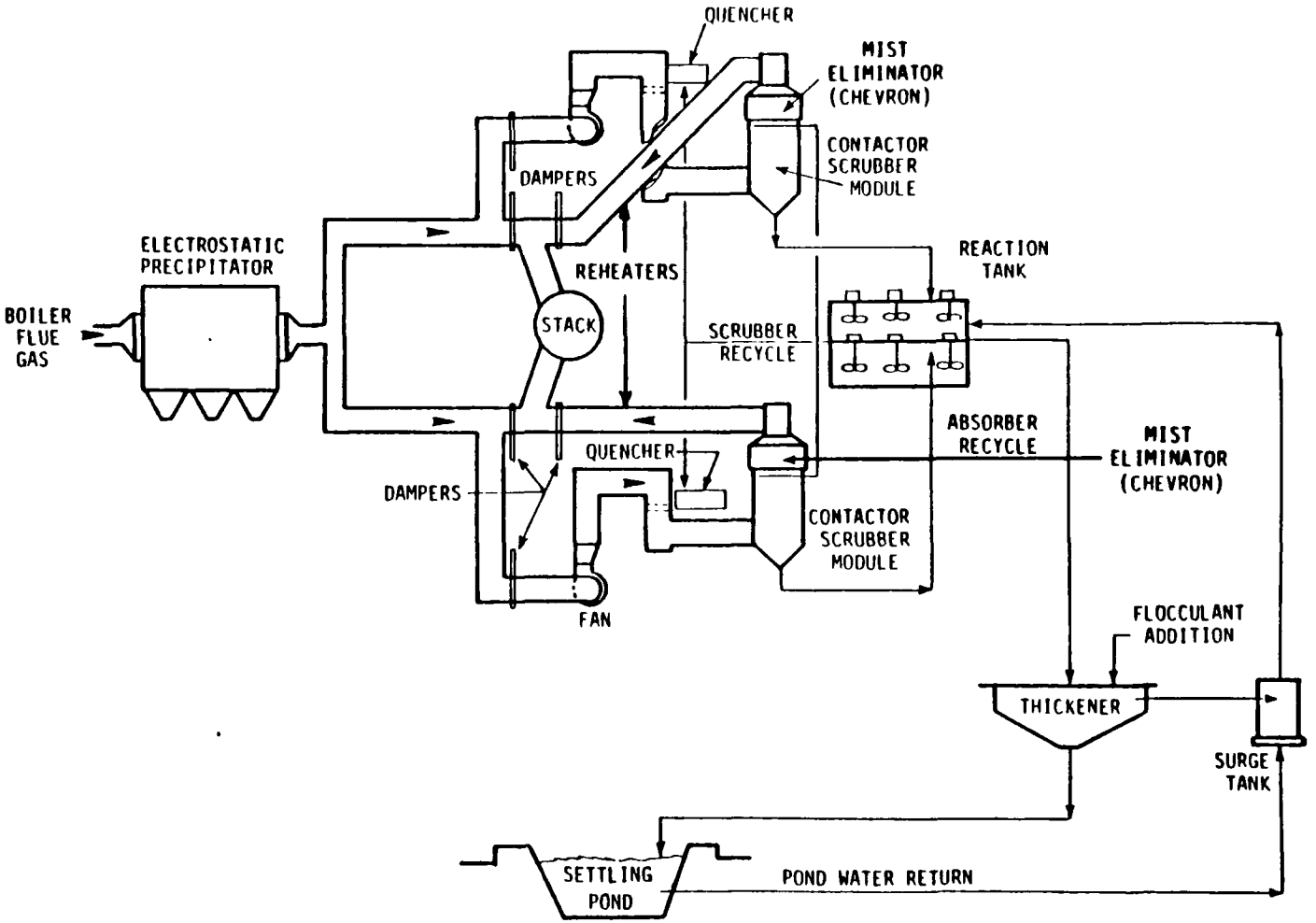

Louisville Gas and Electric, Cane Run 4
FGD System: Simplified Process Flow Diagram

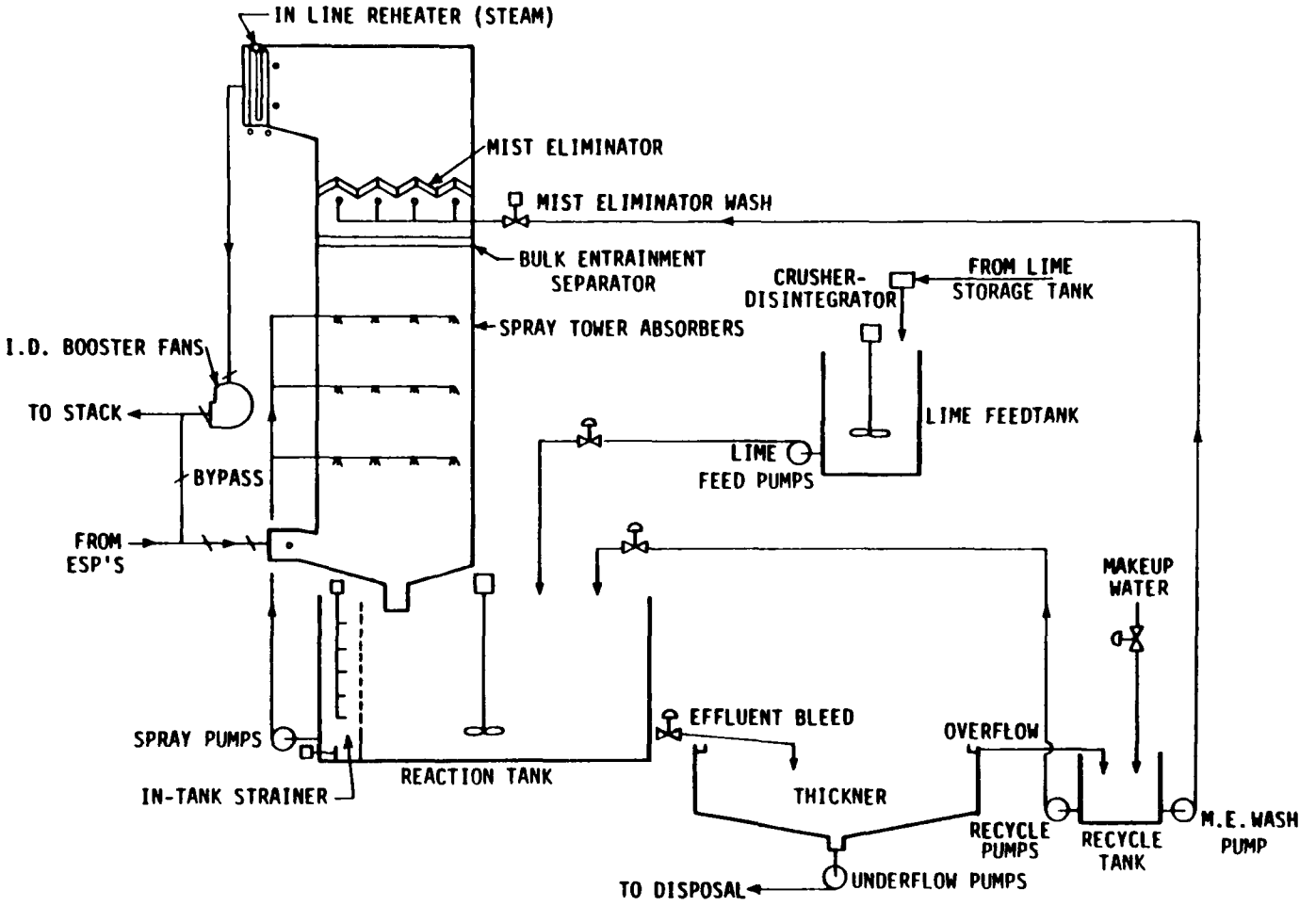

Louisville Gas and Electric, Cane Run 5
FGD System: Simplified Process Flow Diagram

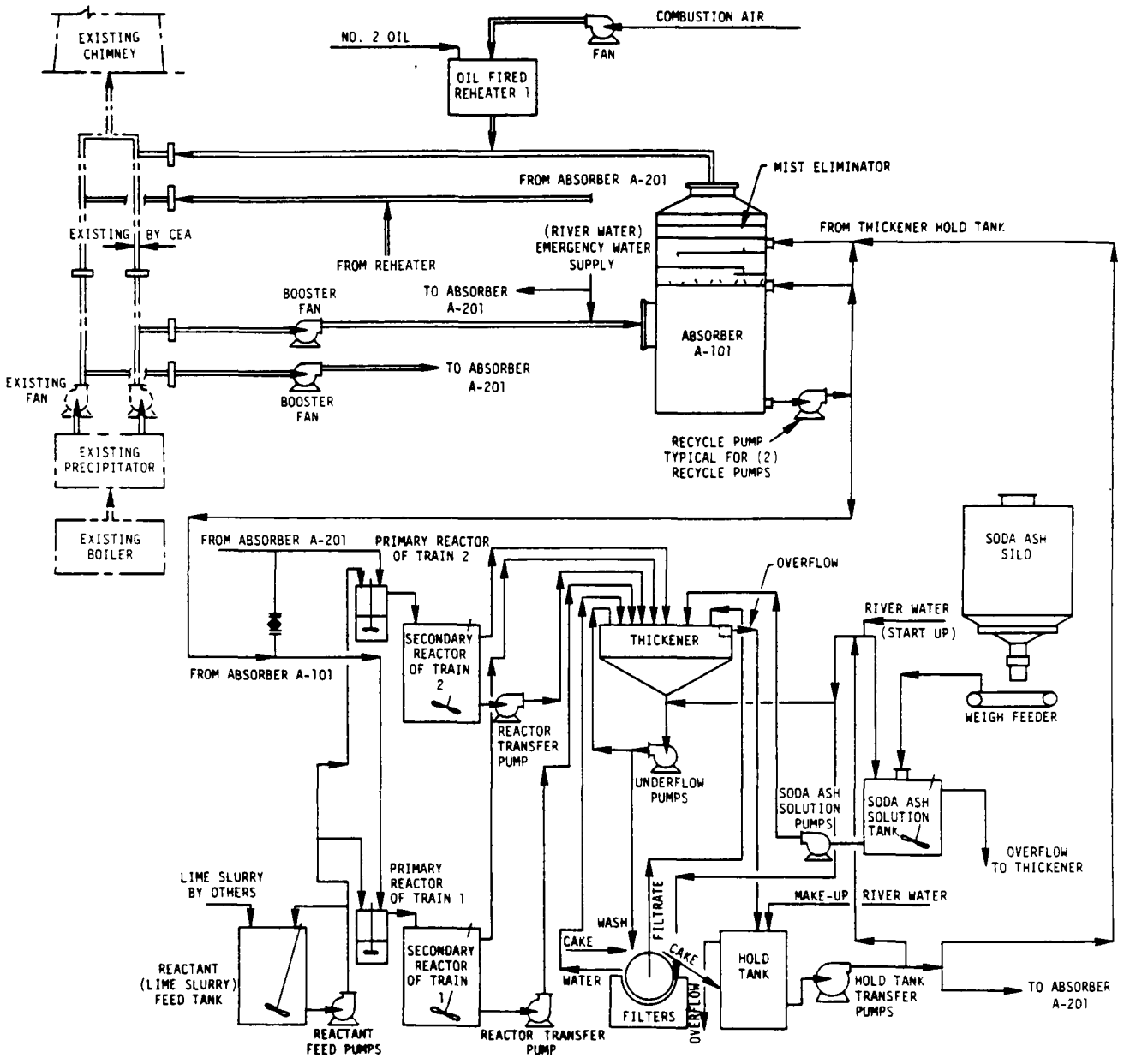

Louisville Gas and Electric, Cane Run 6
Dual Alkali FGD System: Simplified Process Flow Diagram

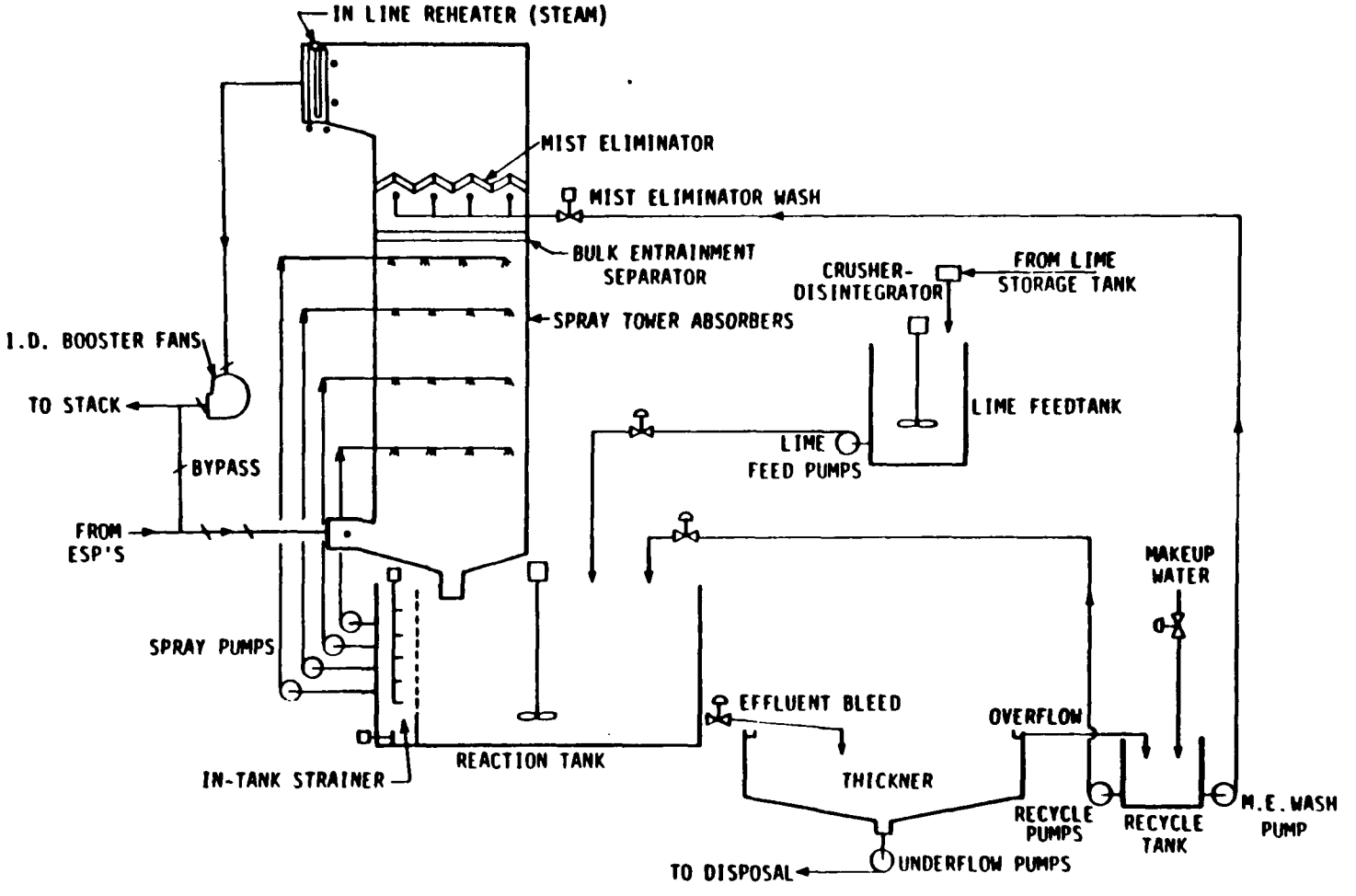

Louisville Gas and Electric,
Mill Creek 1 and 2 FGD System:
Simplified Process Flow Diagram

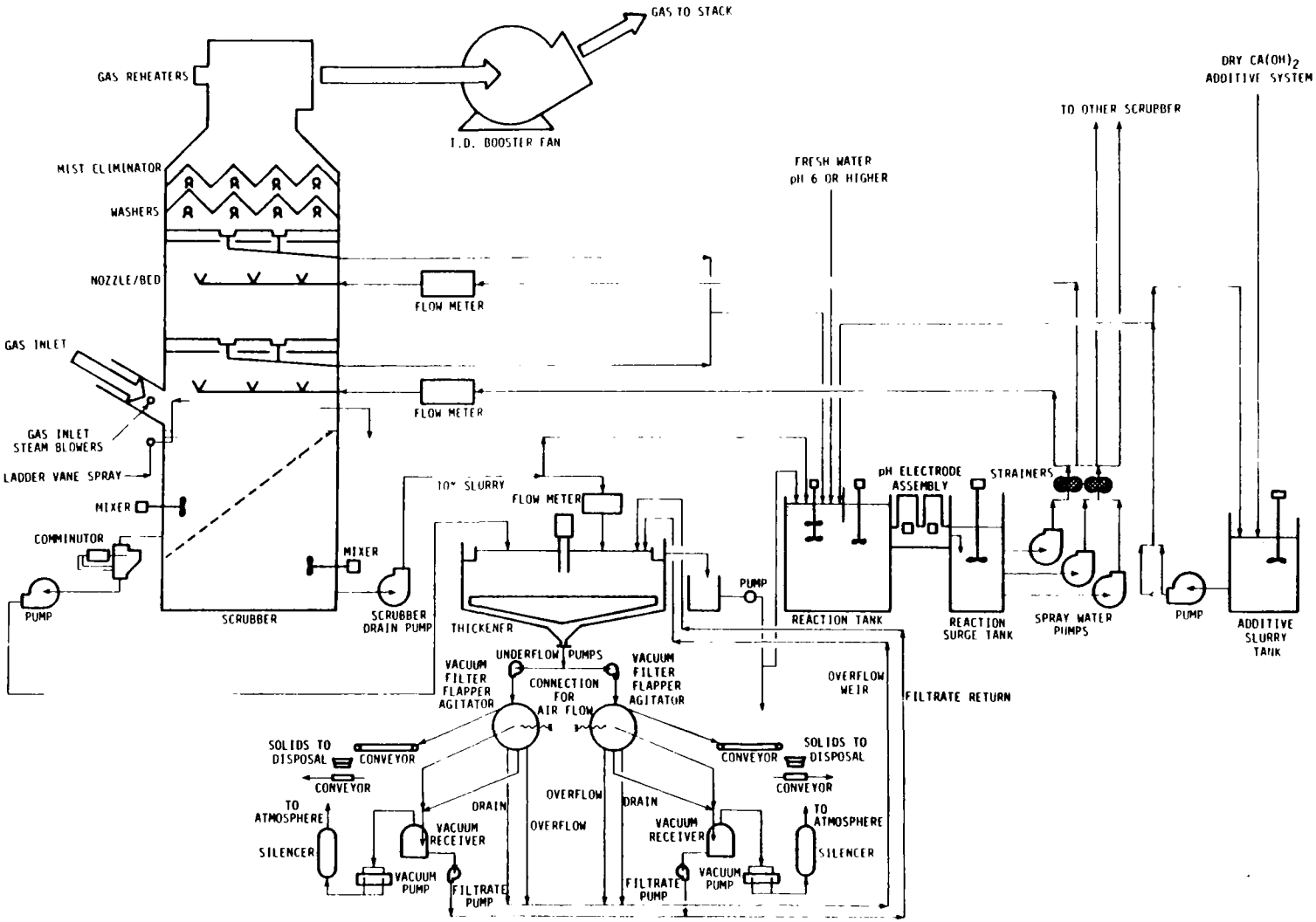

Louisville Gas and Electric,
Paddys Run 6 FGD System:
Simplified Process Flow Diagram

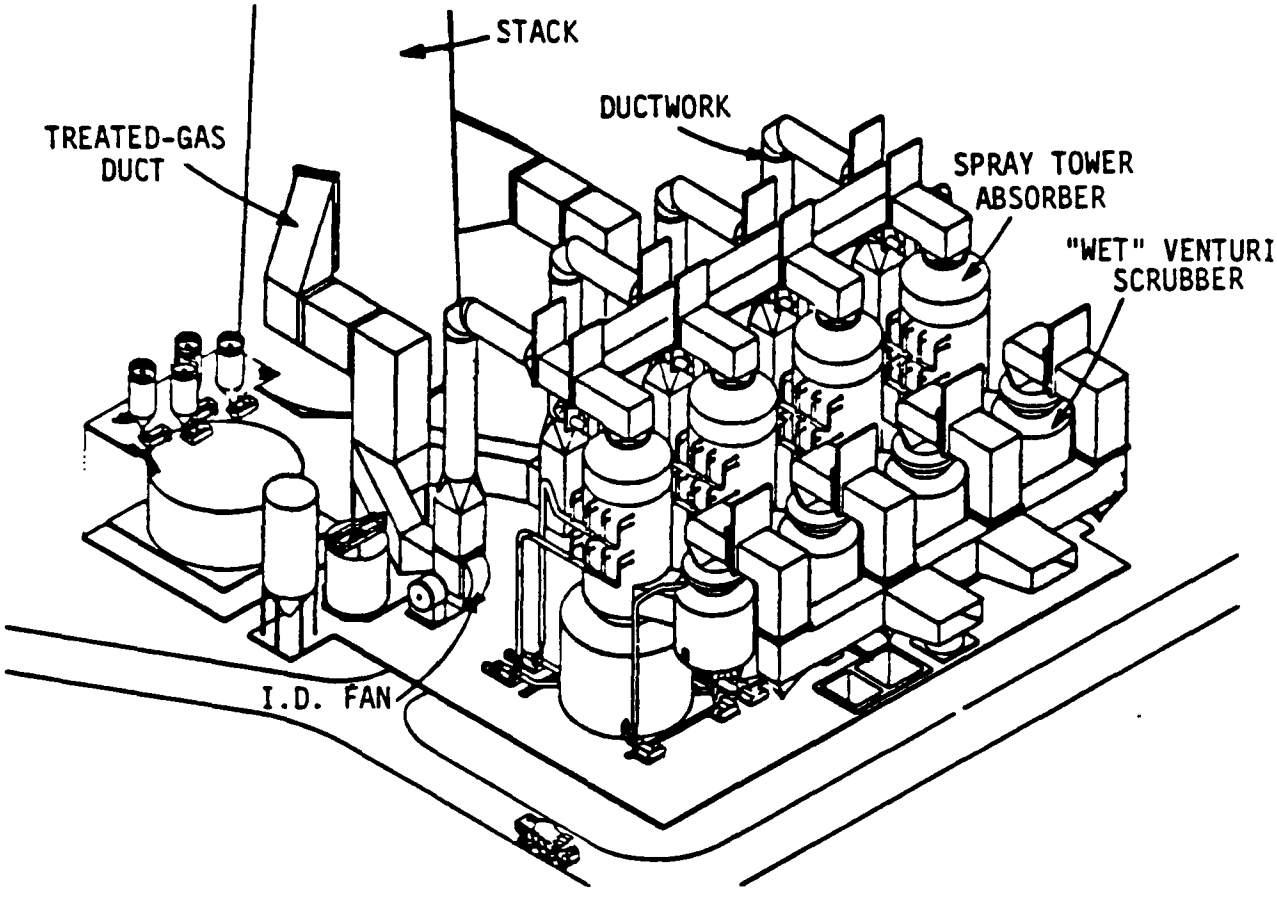

Minnesota Power and Light, Clay Boswell 4:
General Diagram

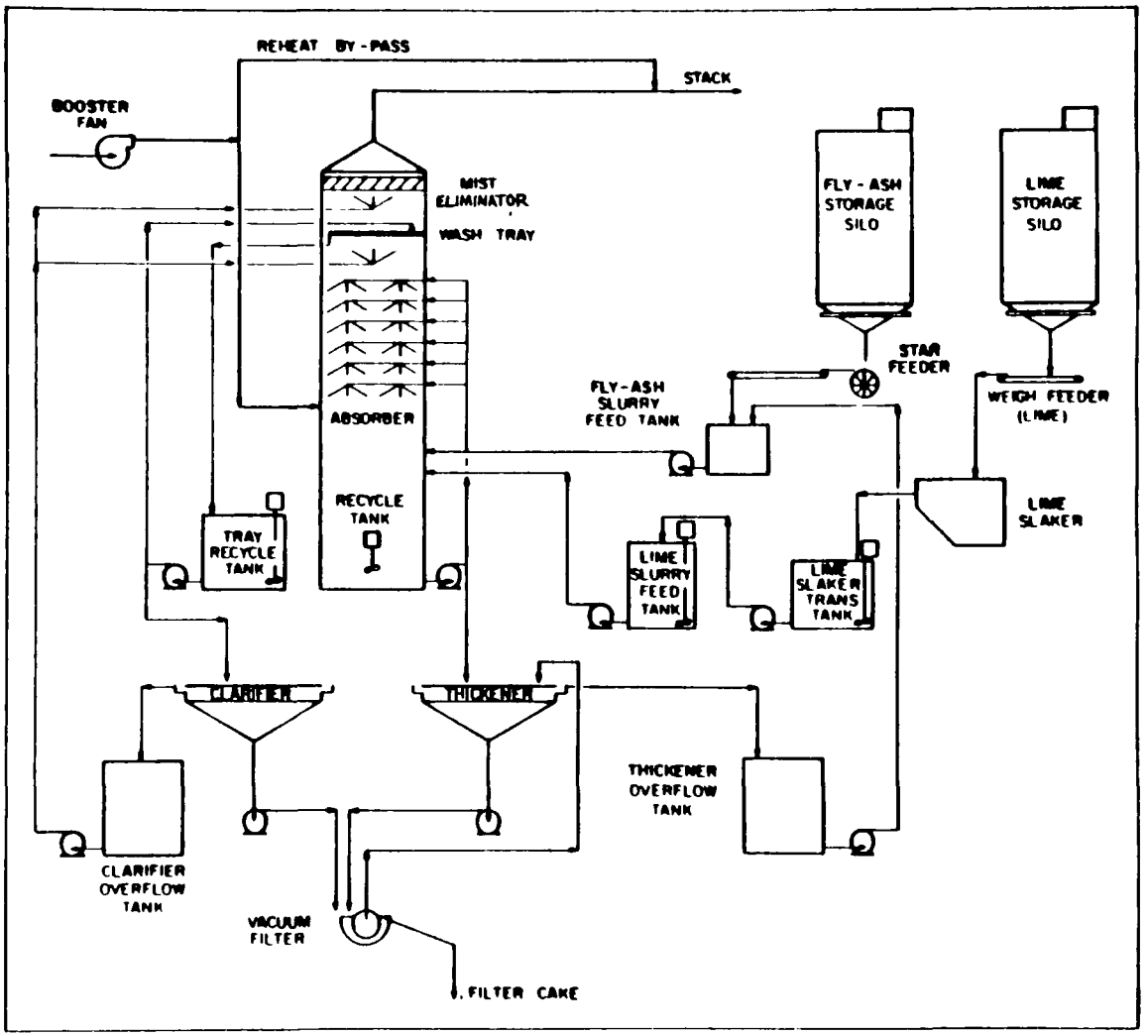

Minnkota Power Cooperative, Milton R. Young 2:
Simplified Process Flow Diagram for One of Two Absorbers

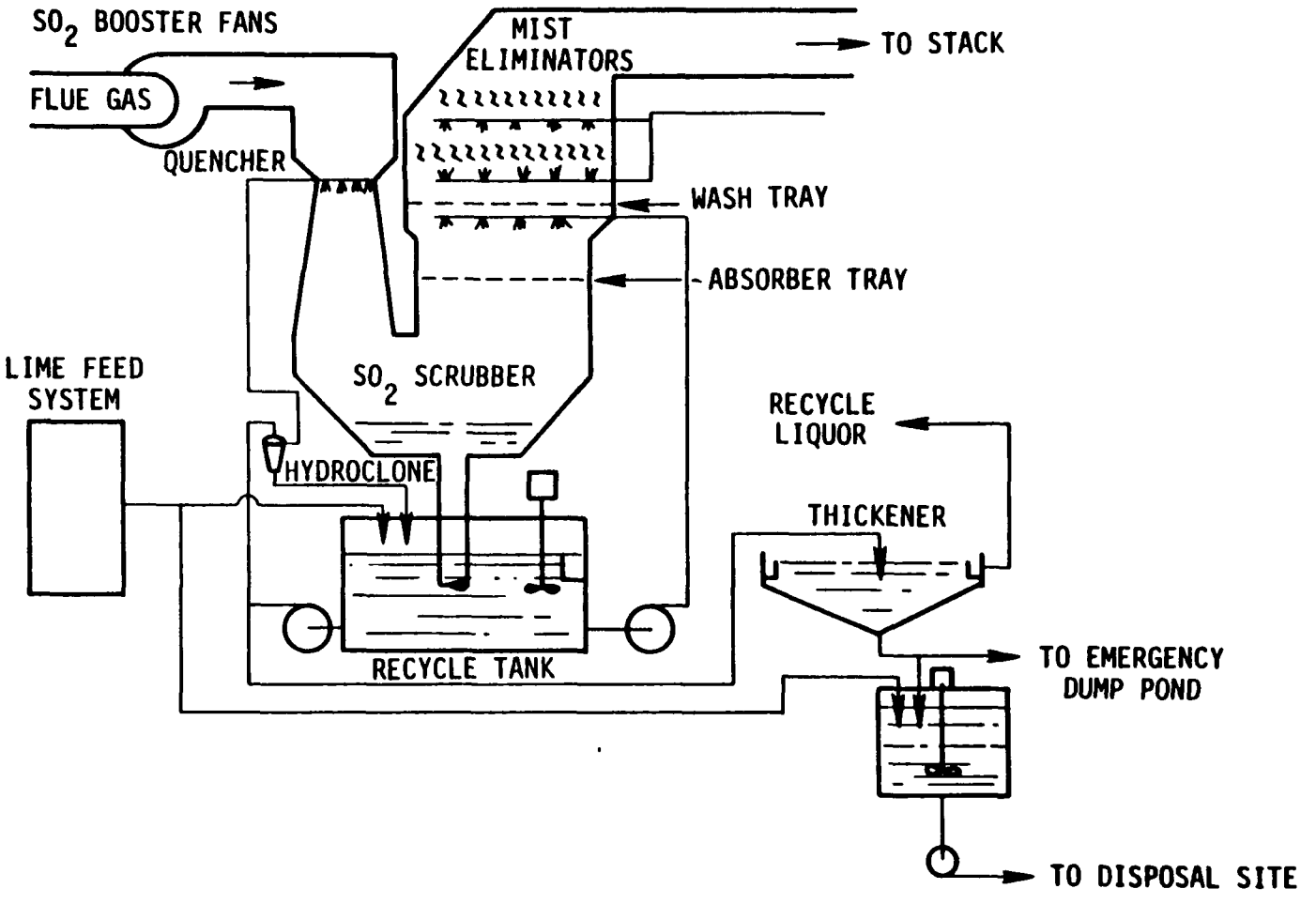

Monongahela Power, Pleasants 1 and 2:
Simplified Process Flow Diagram for One of Four Modules for Either Unit

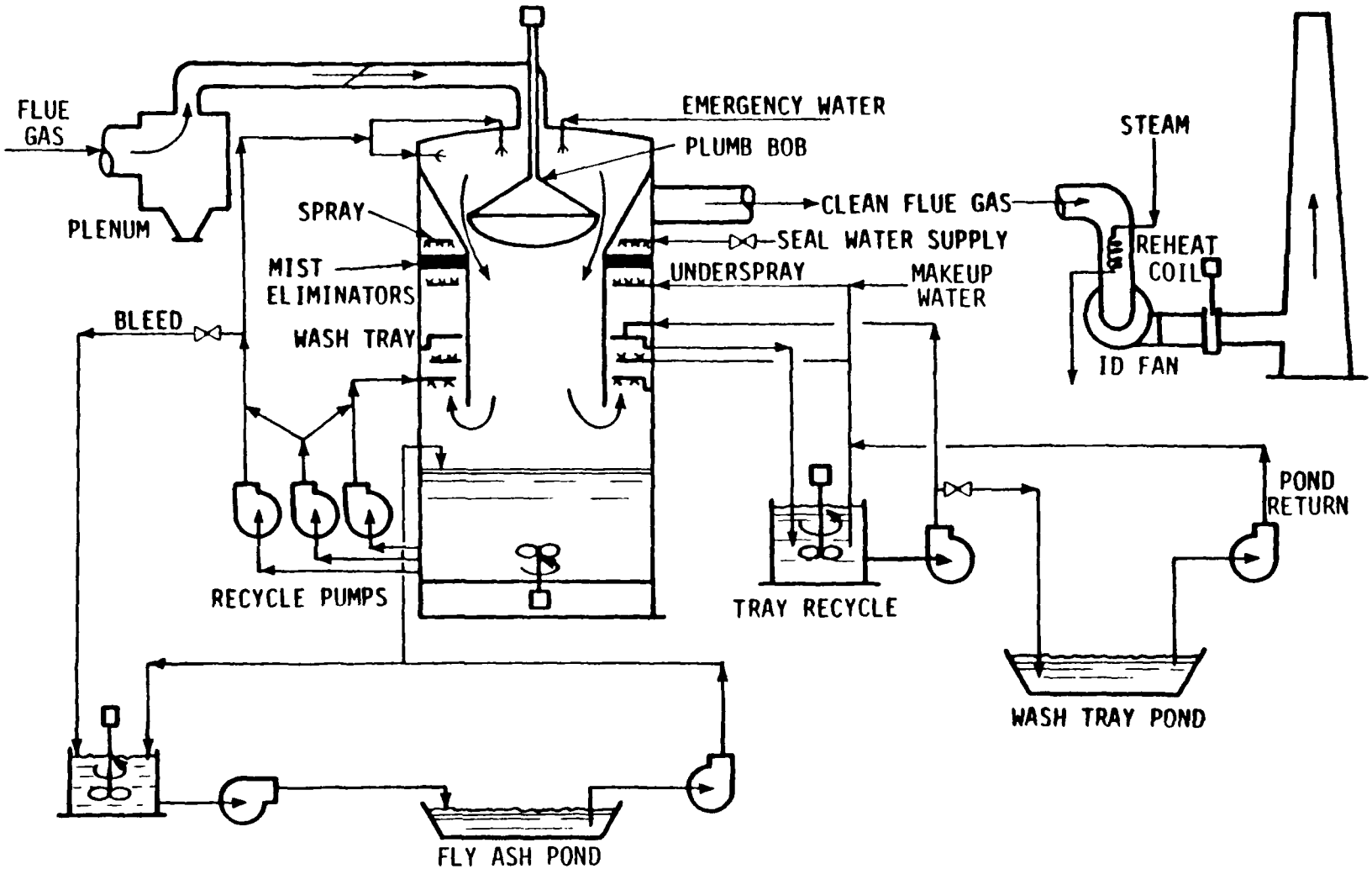

Montana Power, Colstrip 1 and 2:
Process diagram of a given FGD module.

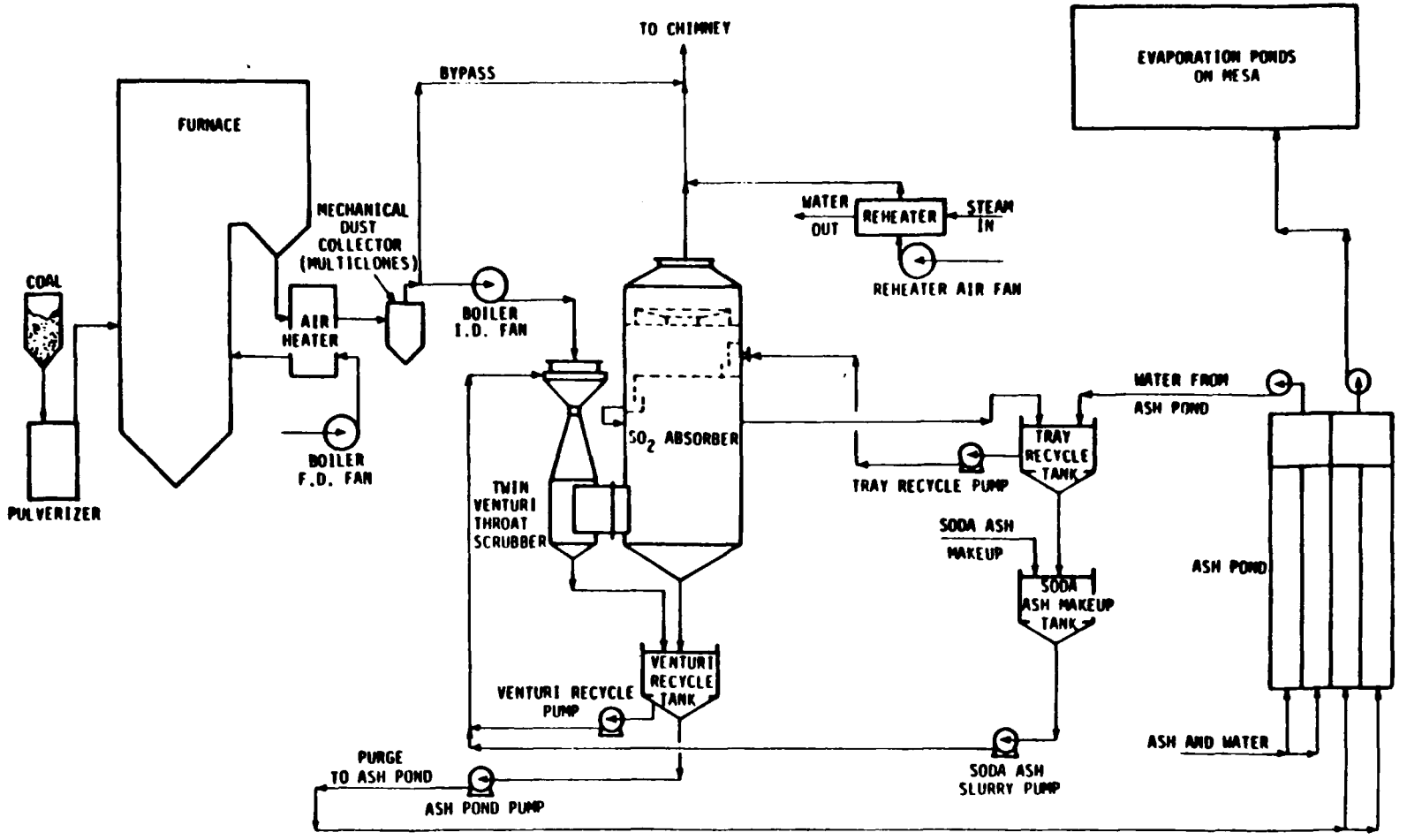

Nevada Power, Reid Gardner 1,2 and 3:
Process diagram of a given FGD system.

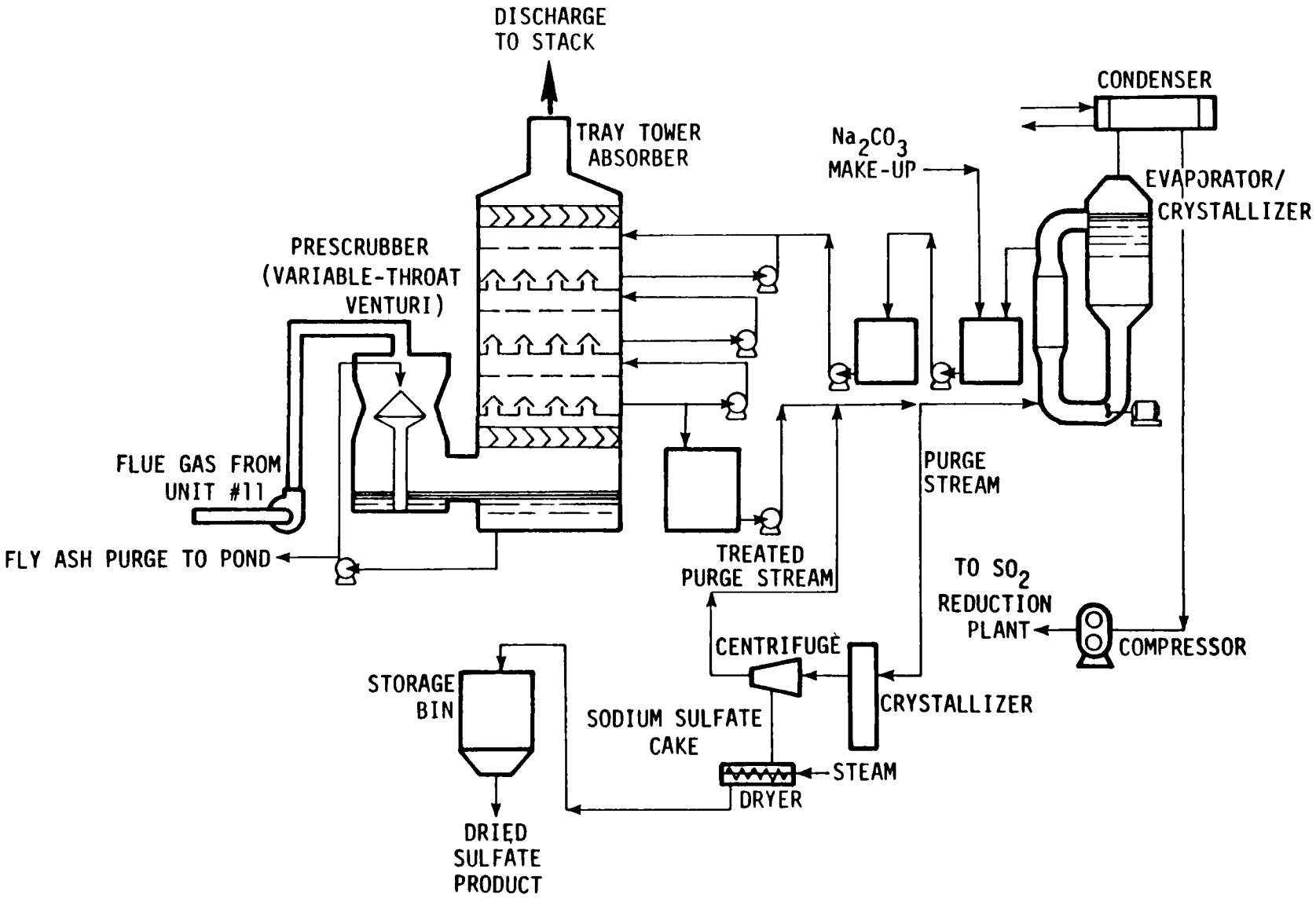

Northern Indiana Public Service,
D. H. Mitchell 11 Wellman Lord/Allied System:
General Process Diagram.

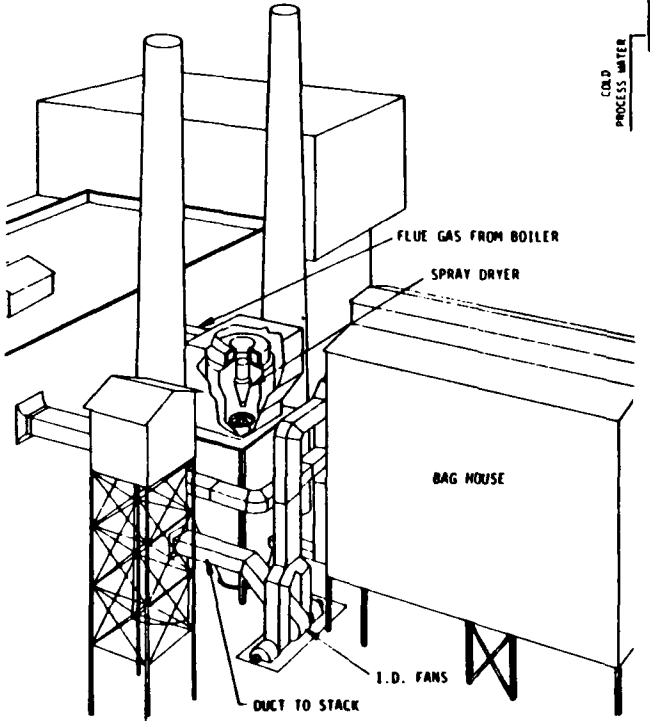

Spray Dryer Cutaway View

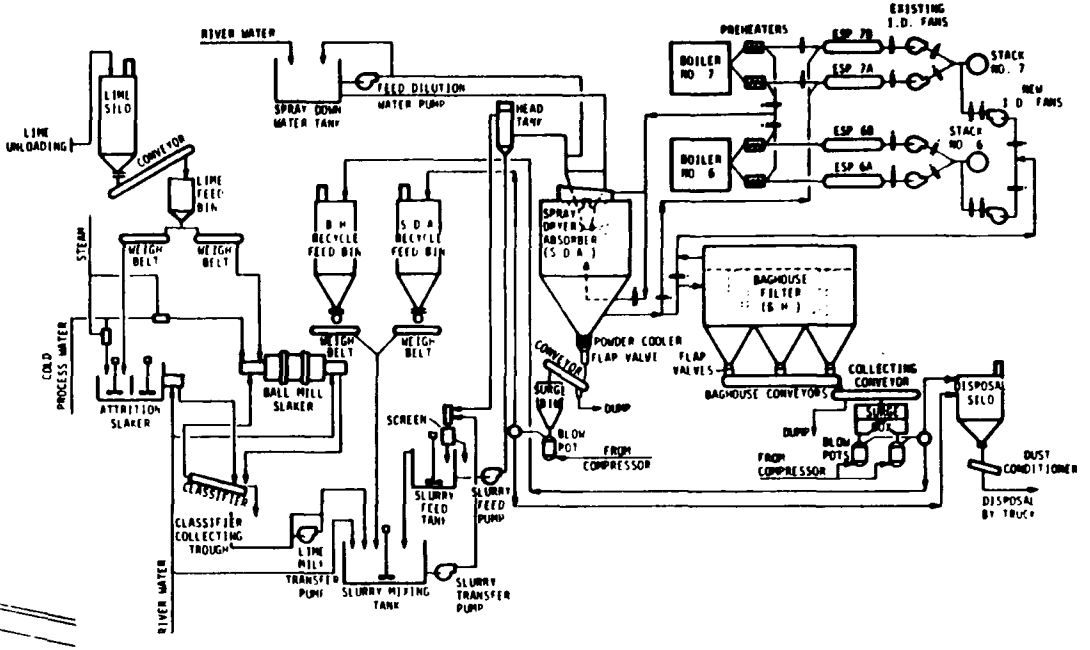

Simplified Process Flow Diagram

Northern States Power, Riverside 6,7: FGD System Flow Diagrams

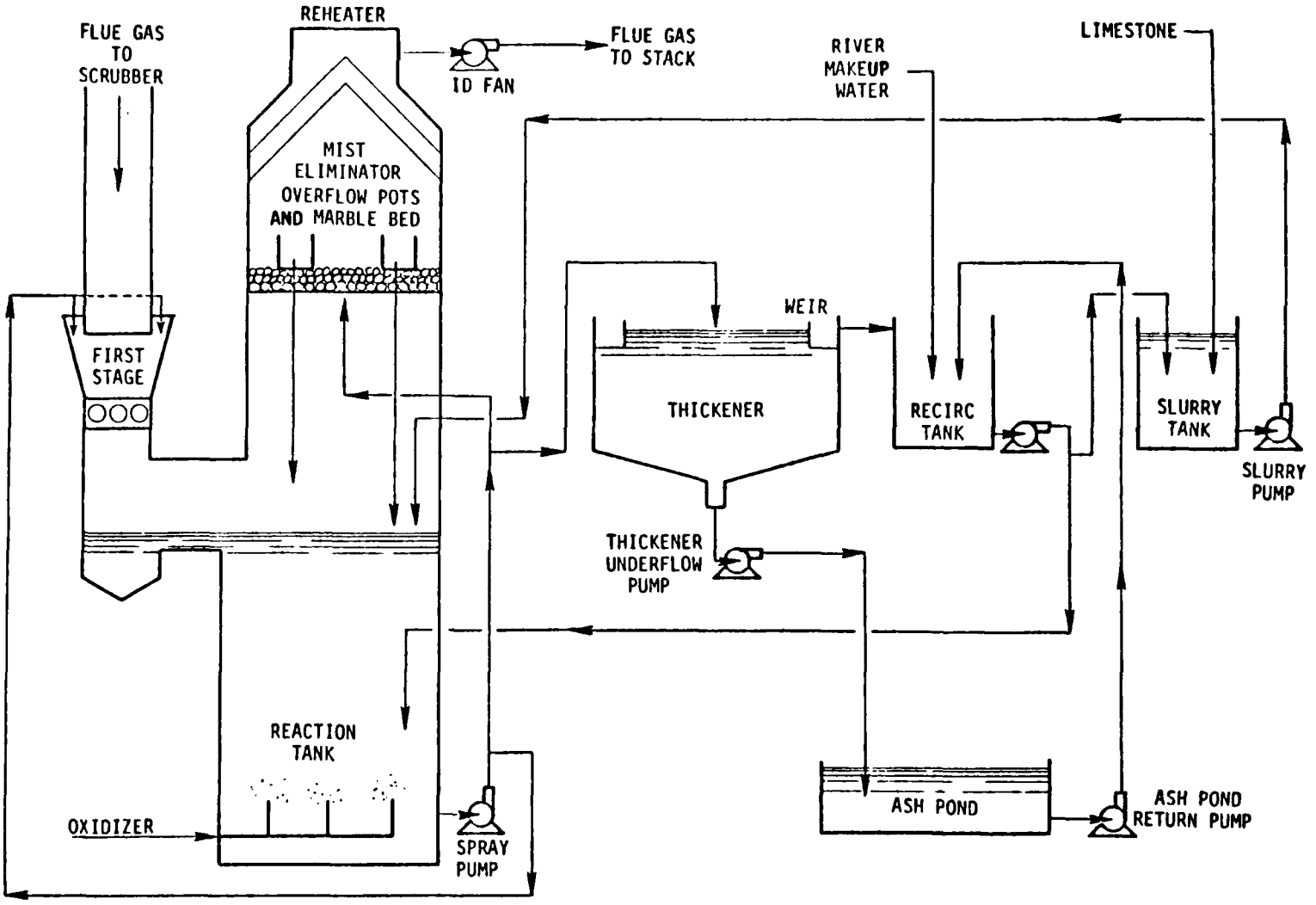

Northern States Power, Sherburne 1 and 2 FGD System:
Simplified Process Flow Diagram

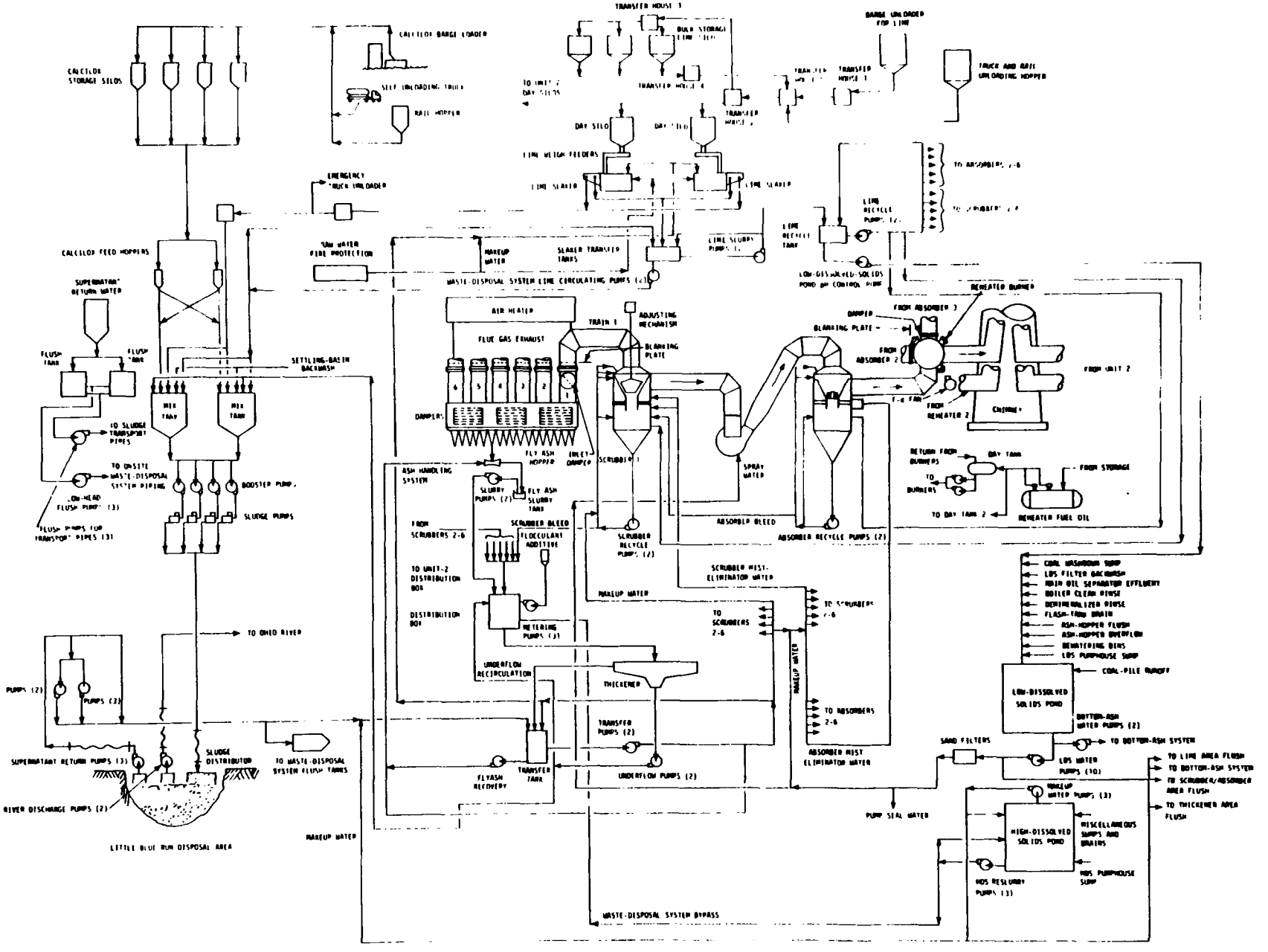

Pennsylvania Power, Bruce Mansfield FGD System:
Process Flow Diagram for Unit 1 or 2

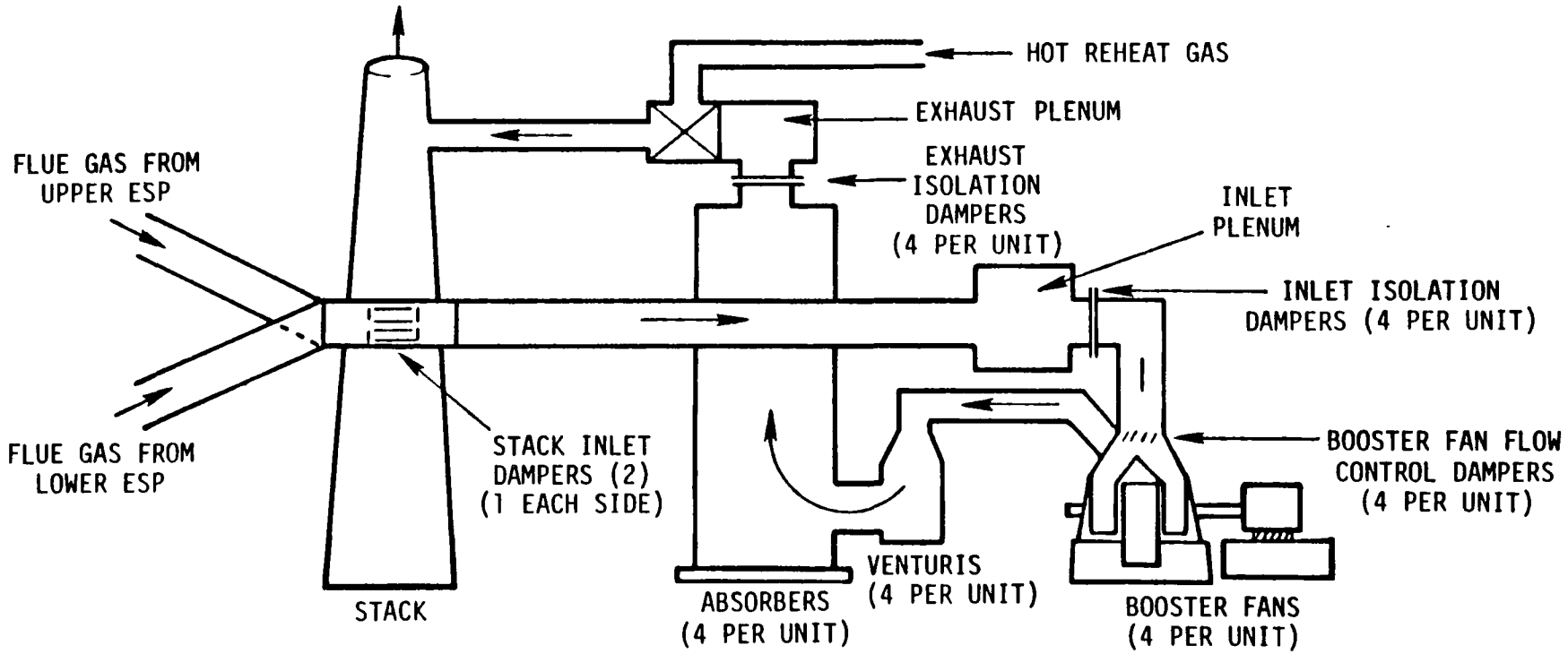

Public Service of New Mexico, San Juan 1, 2, 3, and 4
FGD System Flue Gas Flow Path

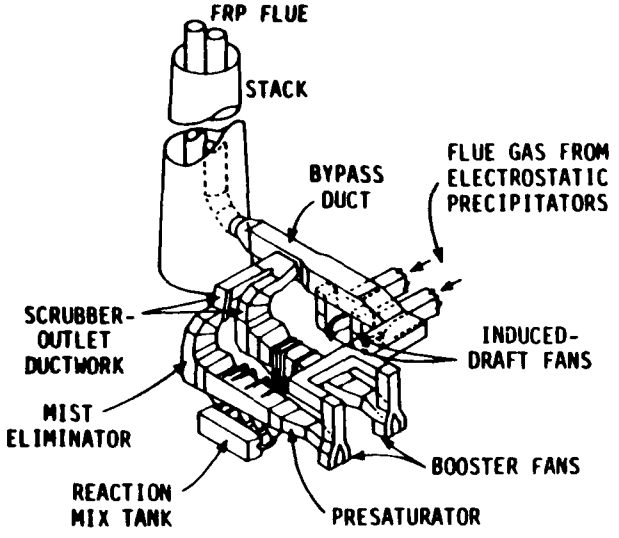

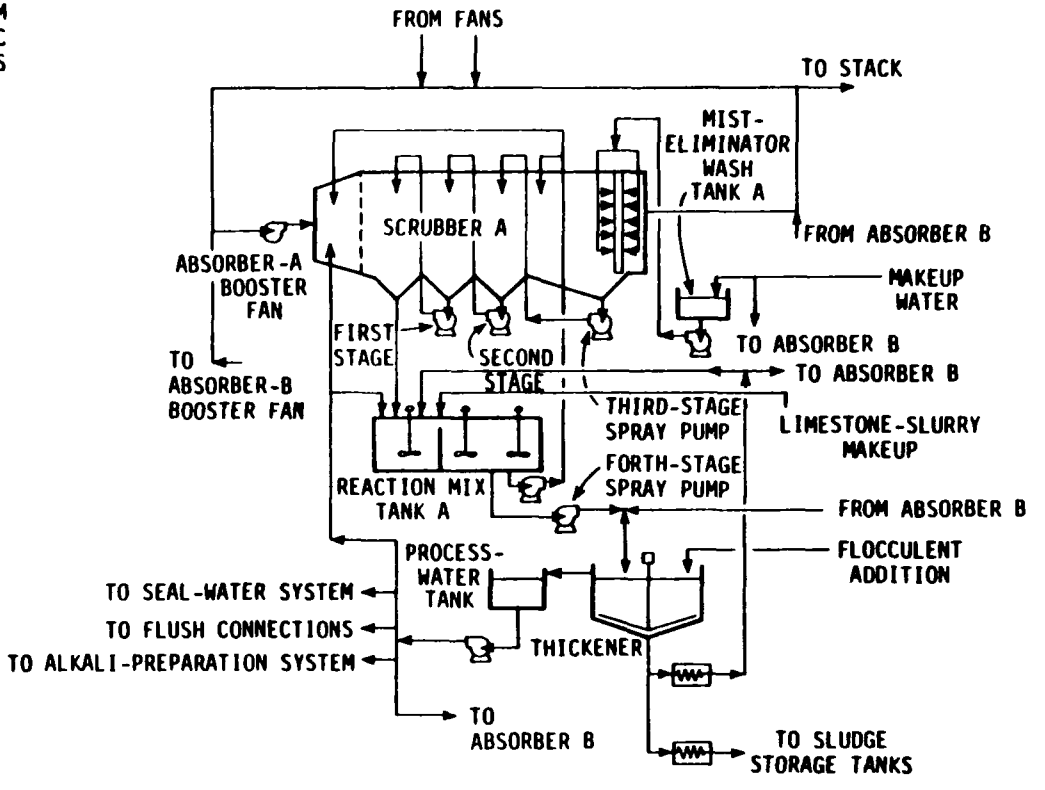

Salt River Project, Coronado 1 and 2 FGD System:
Simplified Process Flow Diagram

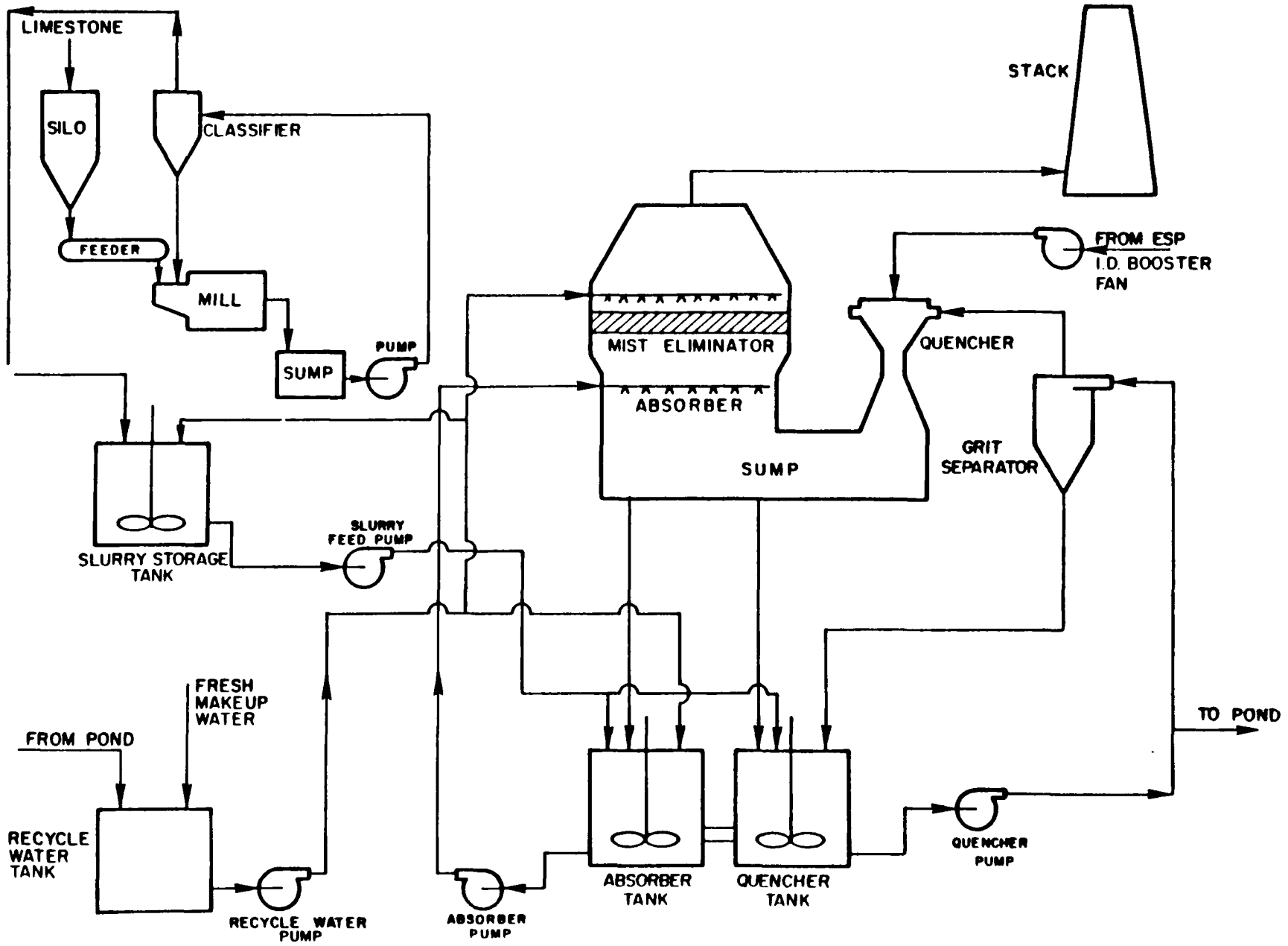

South Carolina Public Service Authority, Winyah 2: Simplified Process Flow Diagram

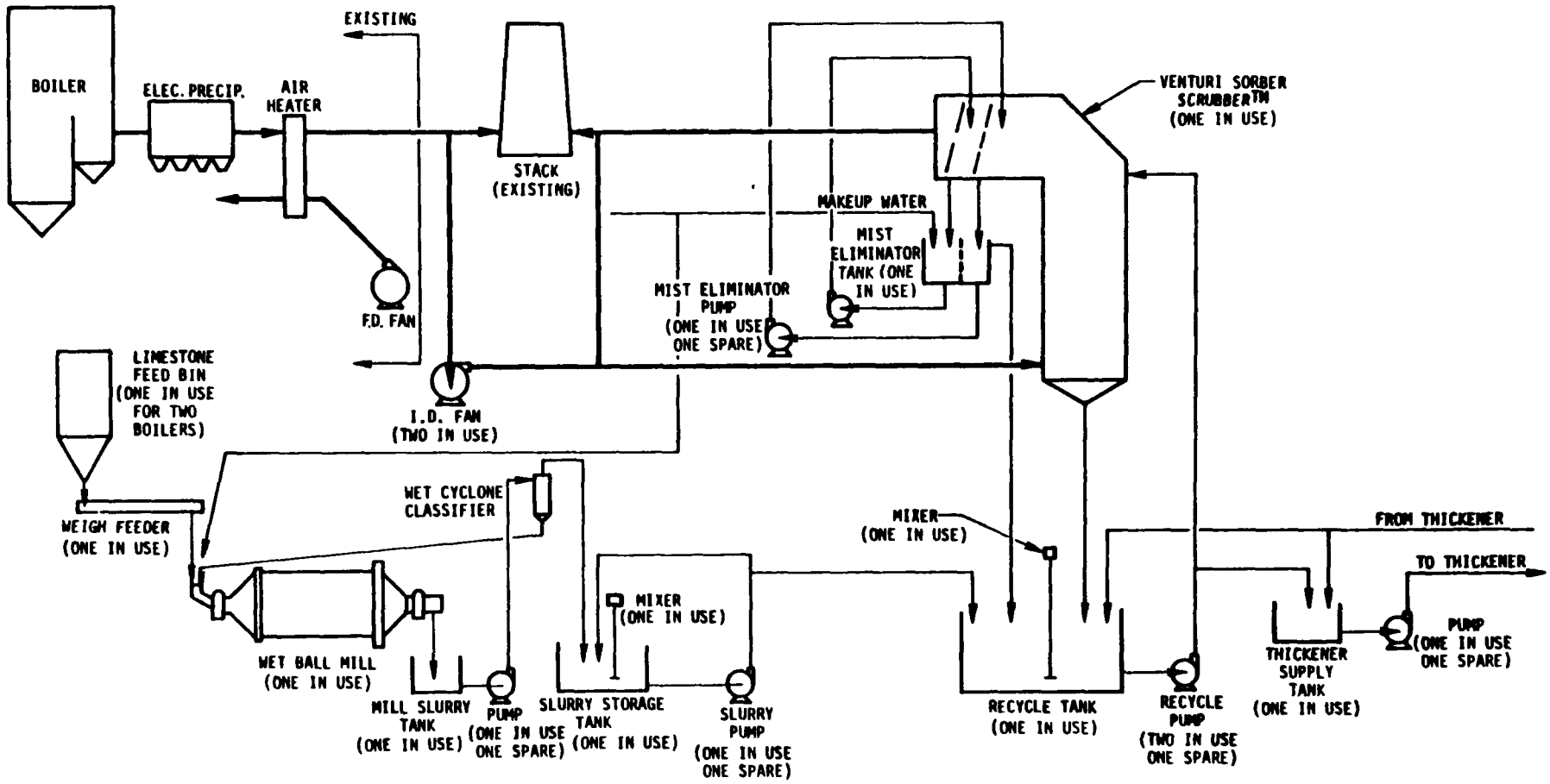

South Mississippi Electric, R.D. Morrow 1 and 2:
Simplified Process Flow Diagram

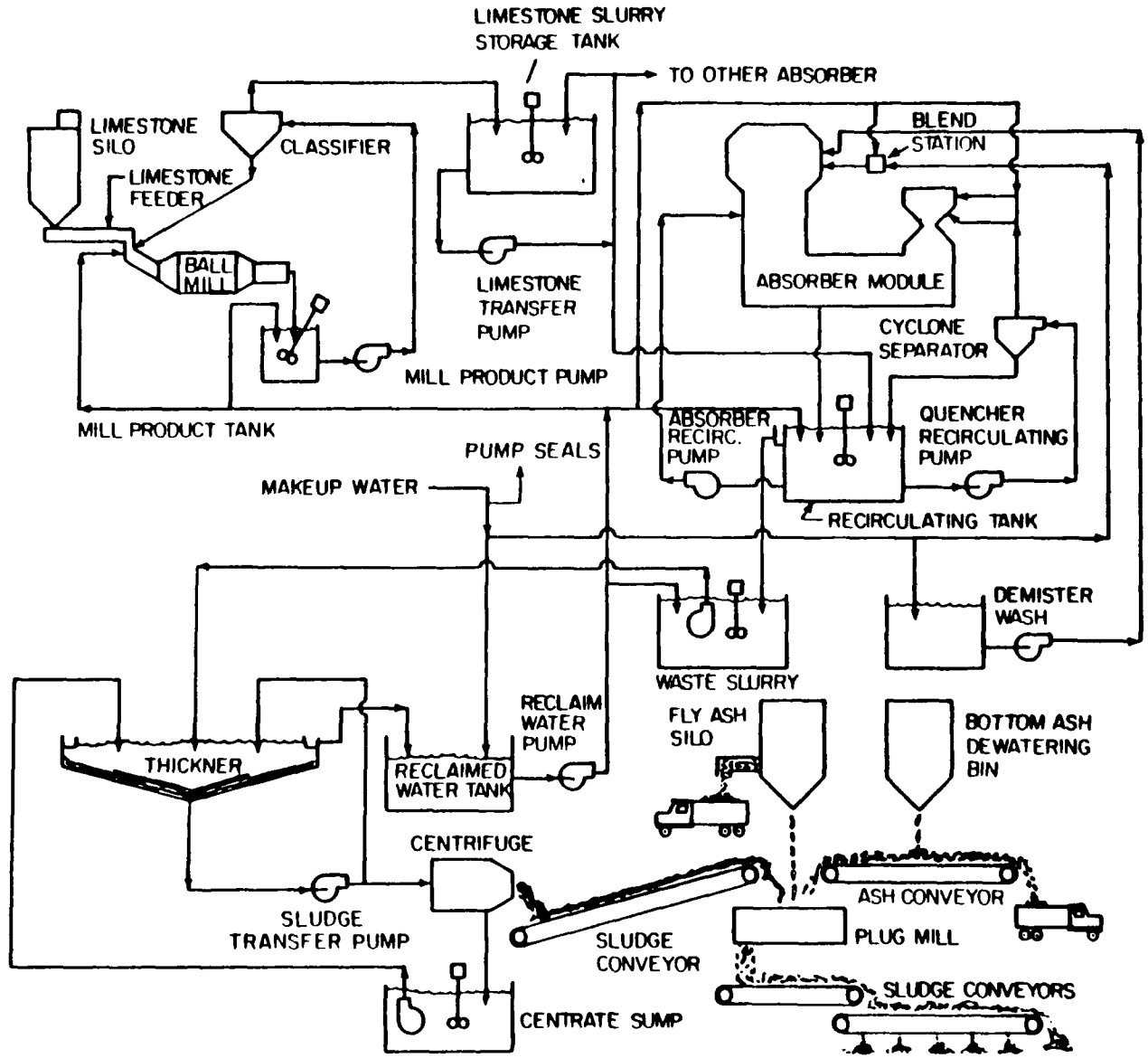

Southern Illinois Power Coop, Marion 4: Simplified Process Flow Diagram

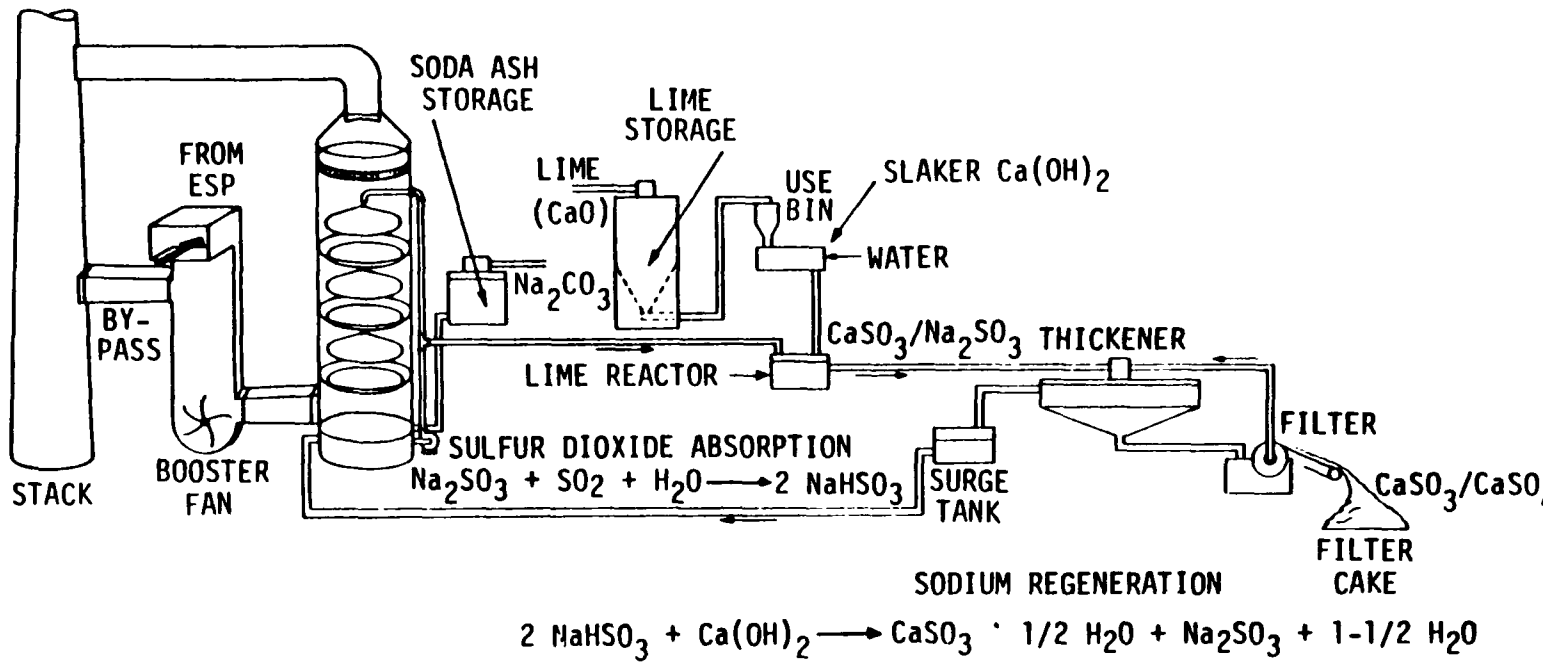

Southern Indiana Gas and Electric, A.B. Brown 1:
Dual Alkali FGD System Simplified Process Flow Diagram

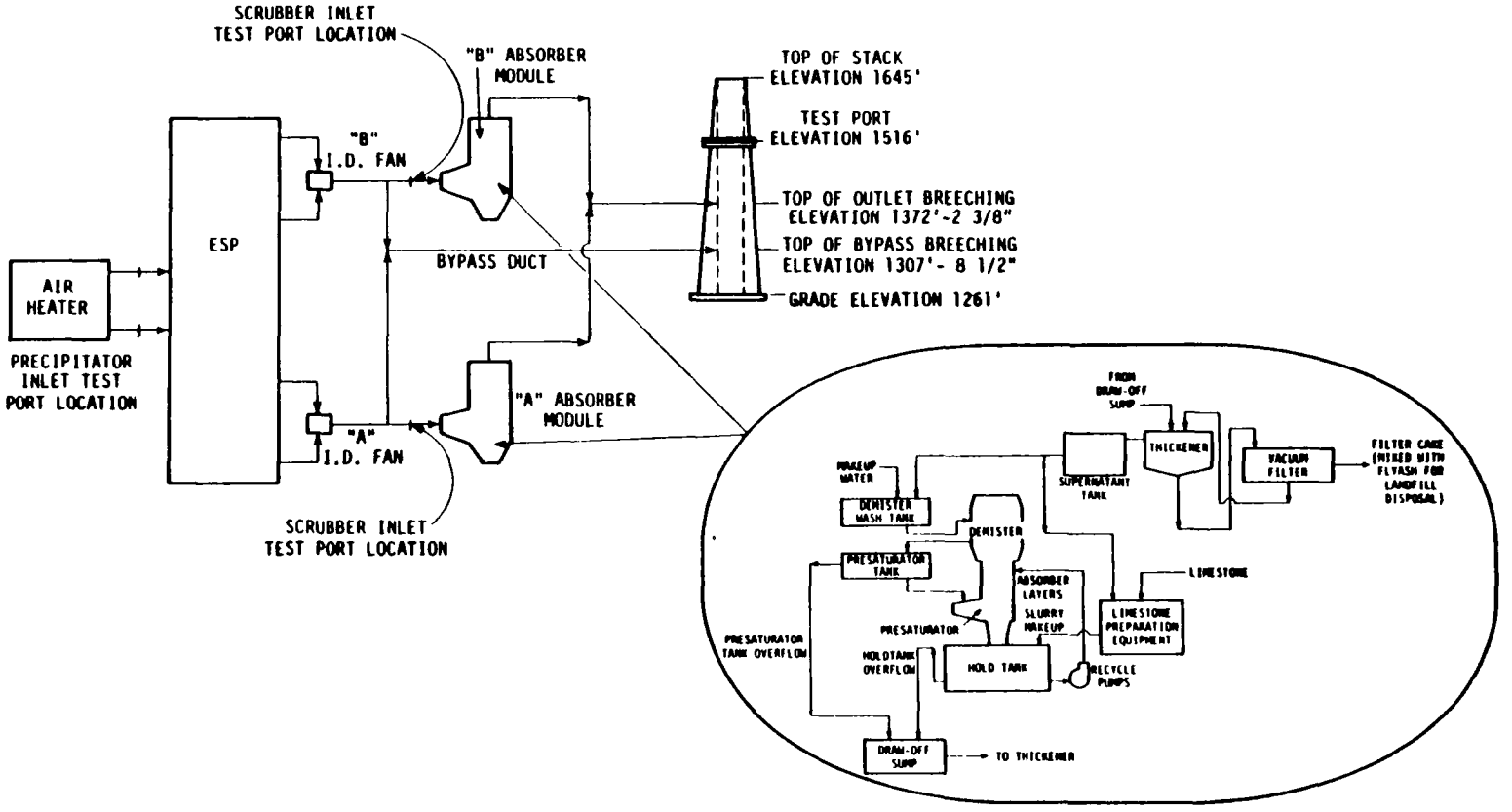

Springfield City Utilities, Southwest 1:
Simplified Process Diagram

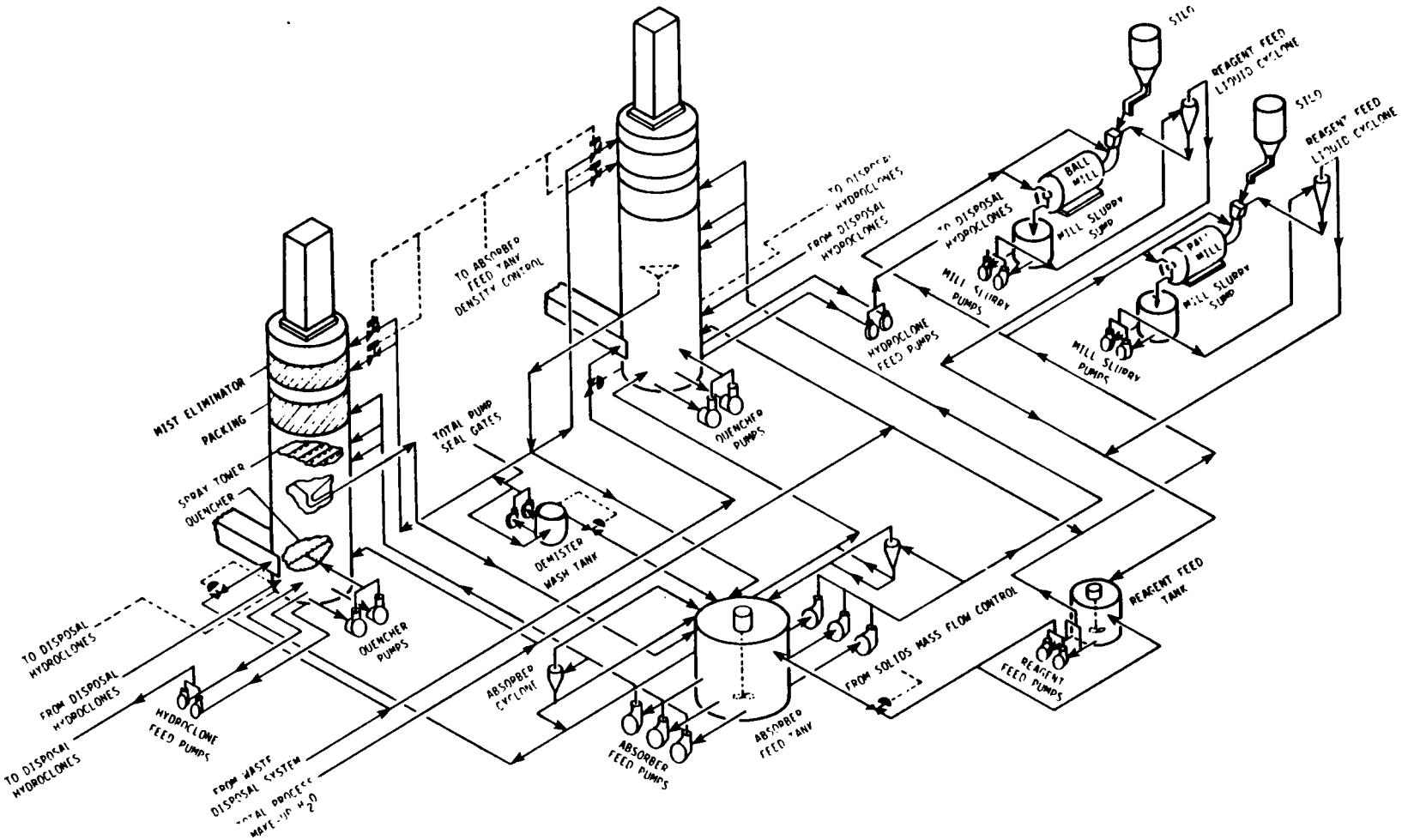

Springfield Water, Light & Power, Dallman 3
Process Flow Diagram

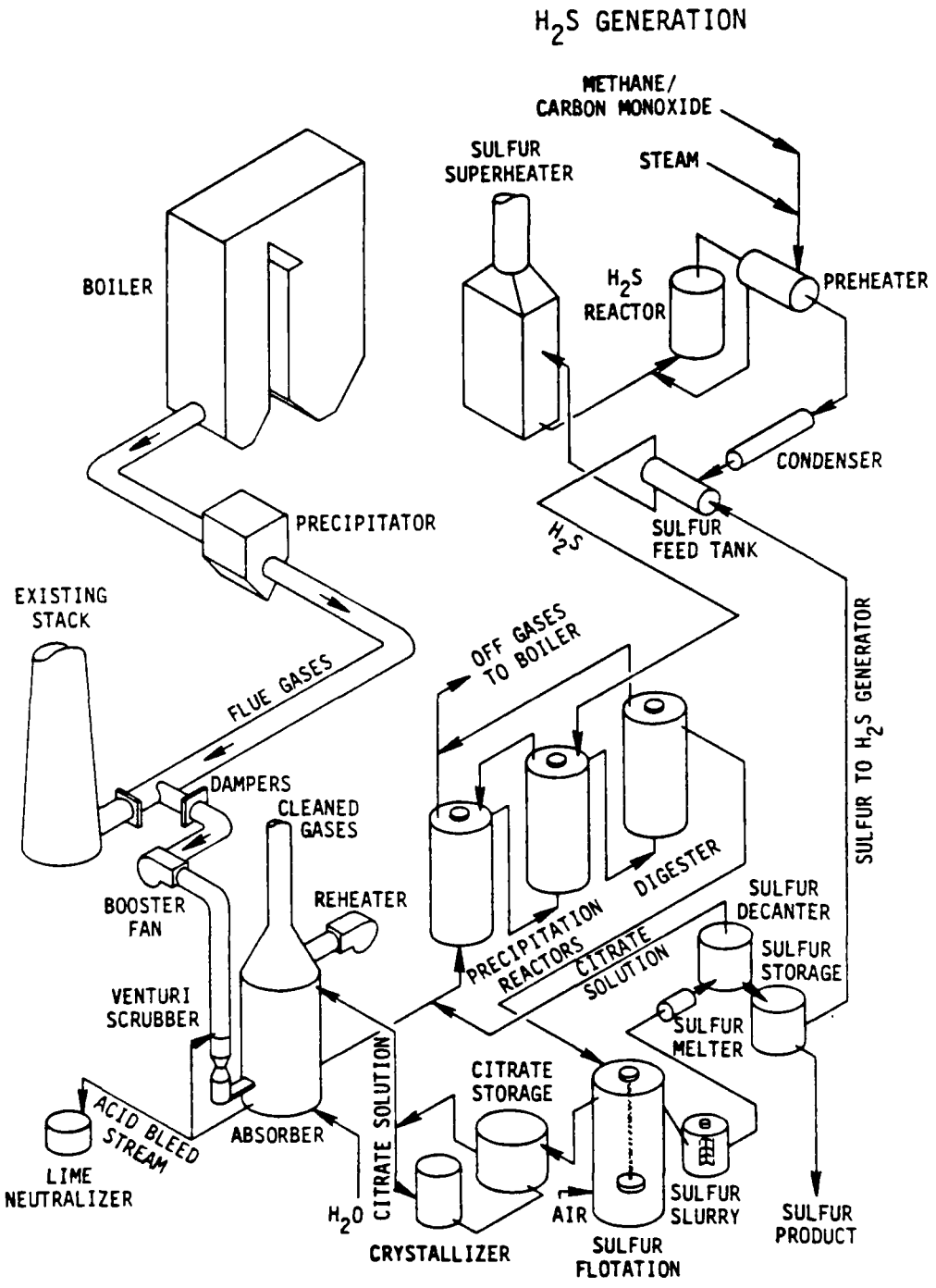

St. Joe Zinc, G.F. Weaton 1:
Citrate FGD System Simplified Process Flow Diagram

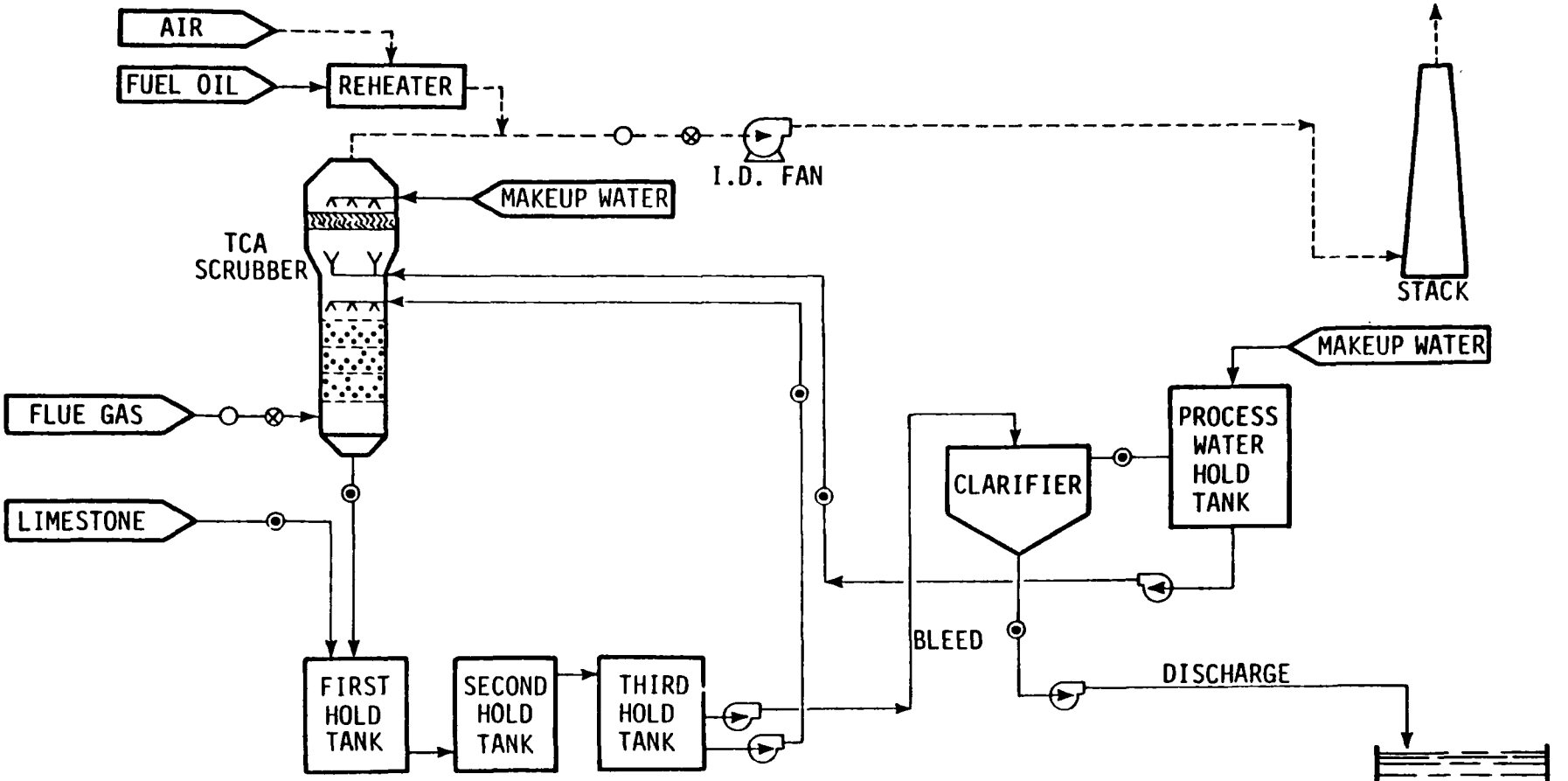

Tennessee Valley Authority,
Shawnee 10A Prototype Test Unit:
General Process Diagram.

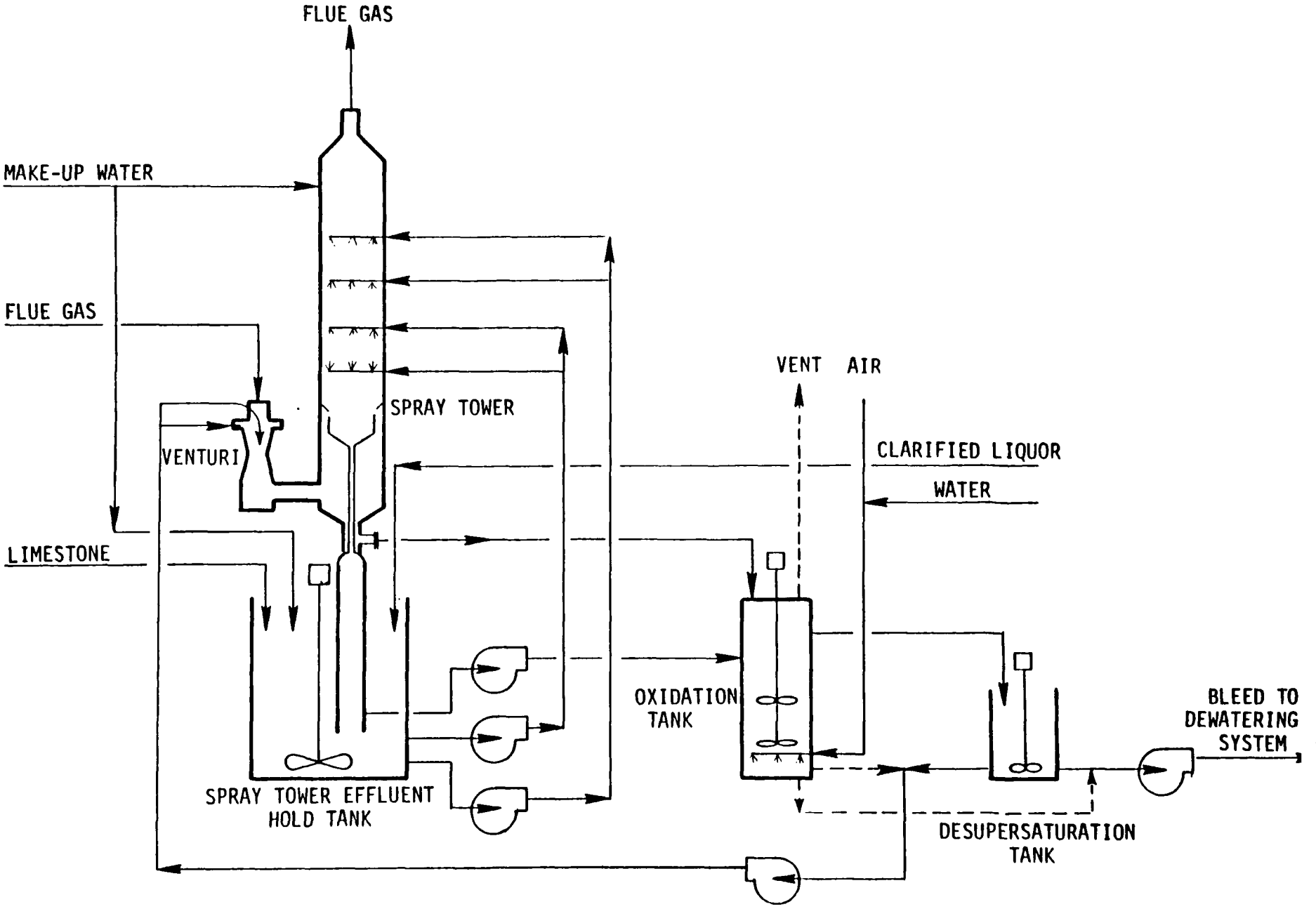

Tennessee Valley Authority, Shawnee 10B Prototype Test Unit:
Modified Venturi/Spray Tower System for 2-Stage Oxidation Testing.

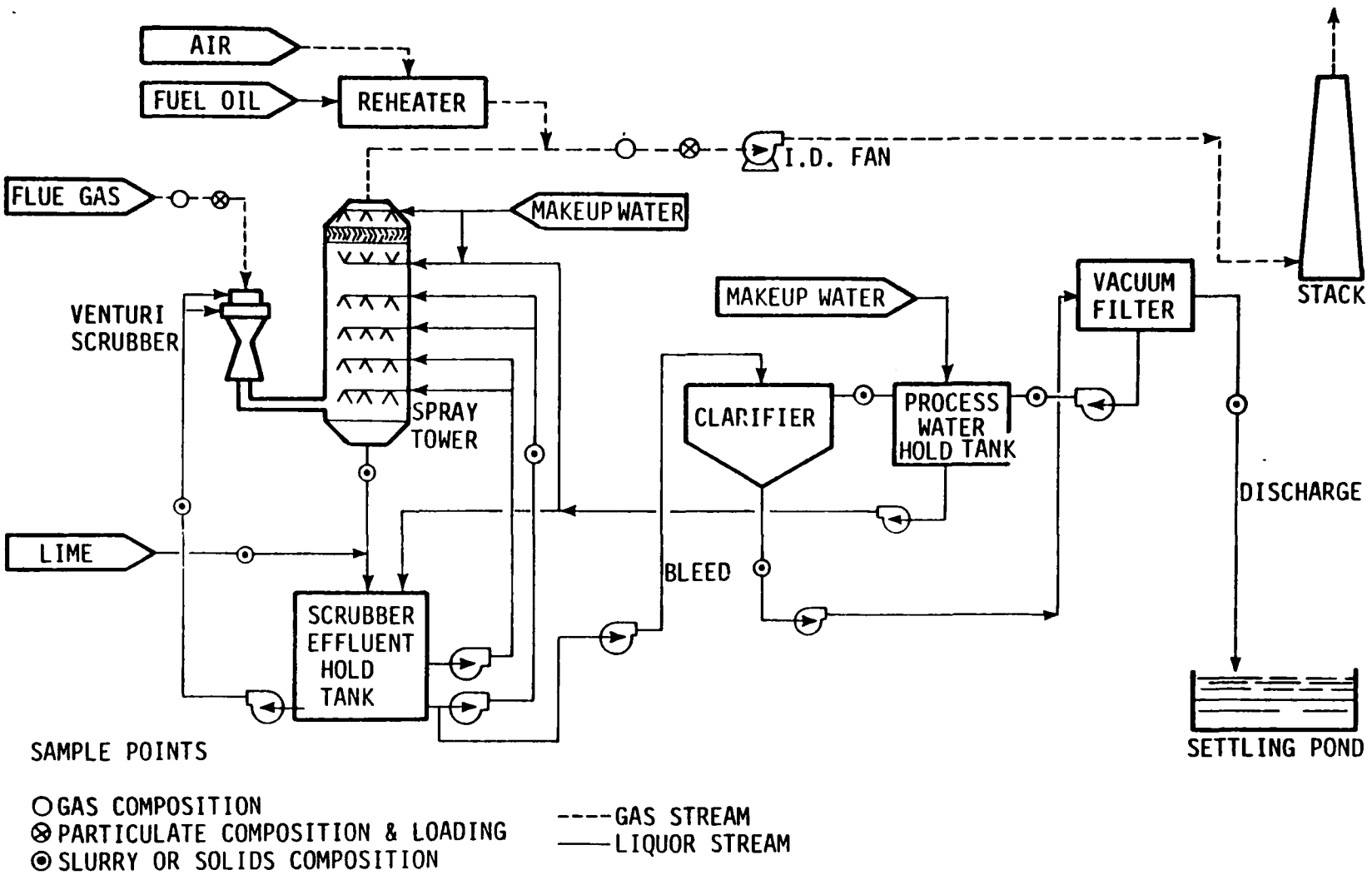

Tennessee Valley Authority, Shawnee 10B Prototype Unit:
General Process Diagram.

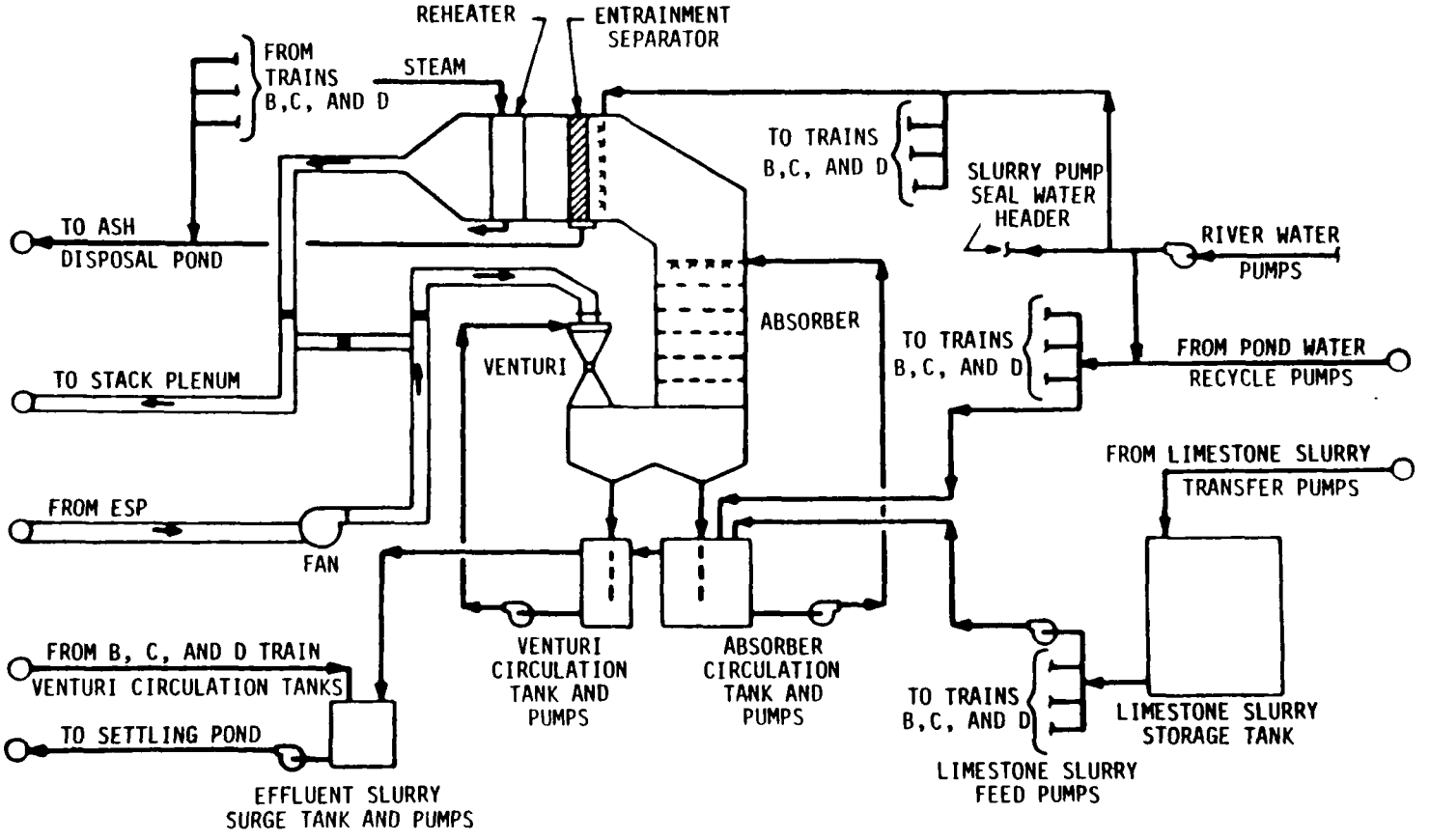

Tennessee Valley Authority, Widows Creek 8 FGD System:
Process Flow Diagram for One of the Four Scrubber Trains

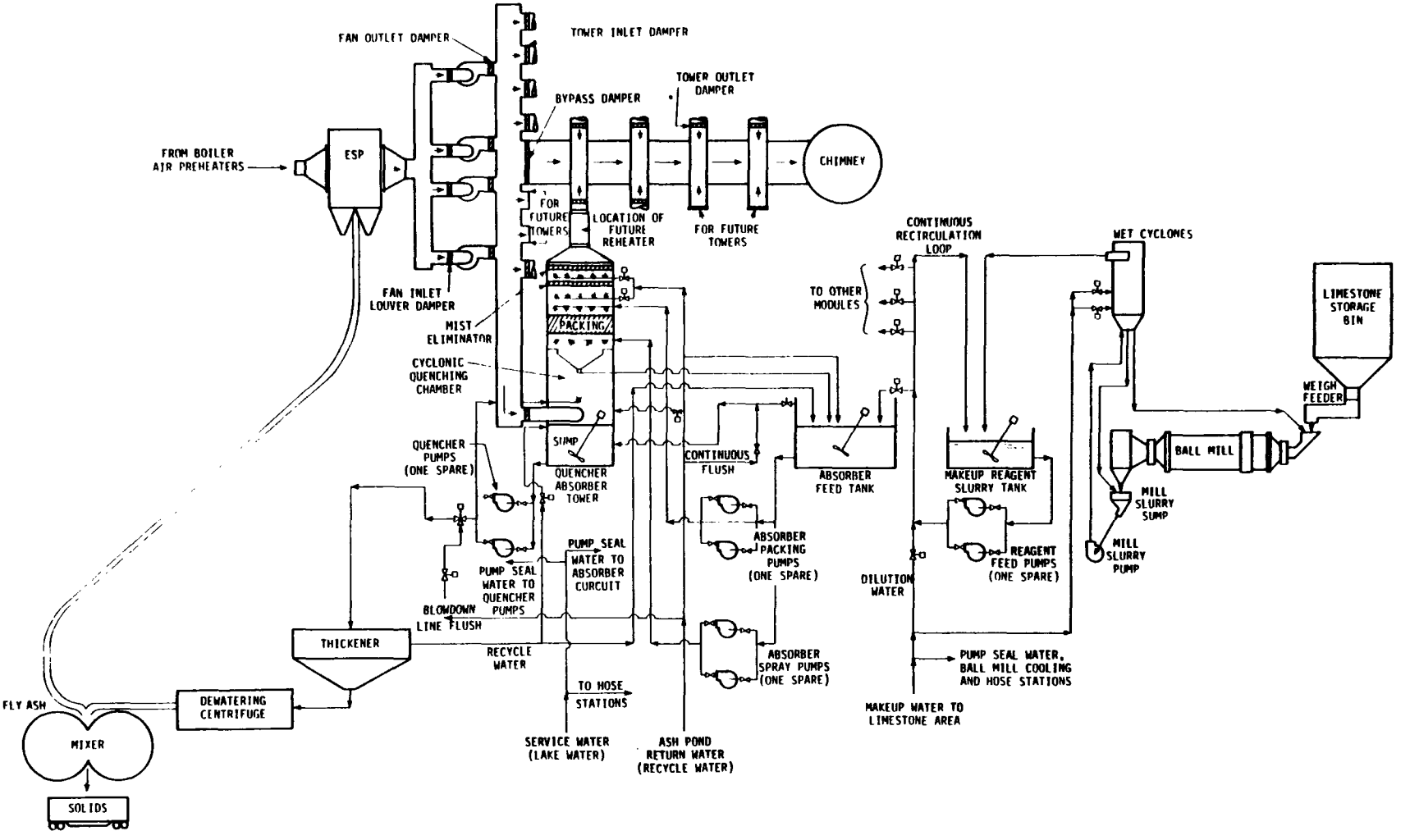

Texas Utilities,
Simplified Process Flow Diagram for One of the Three Identical
Martin Lake FGD Systems

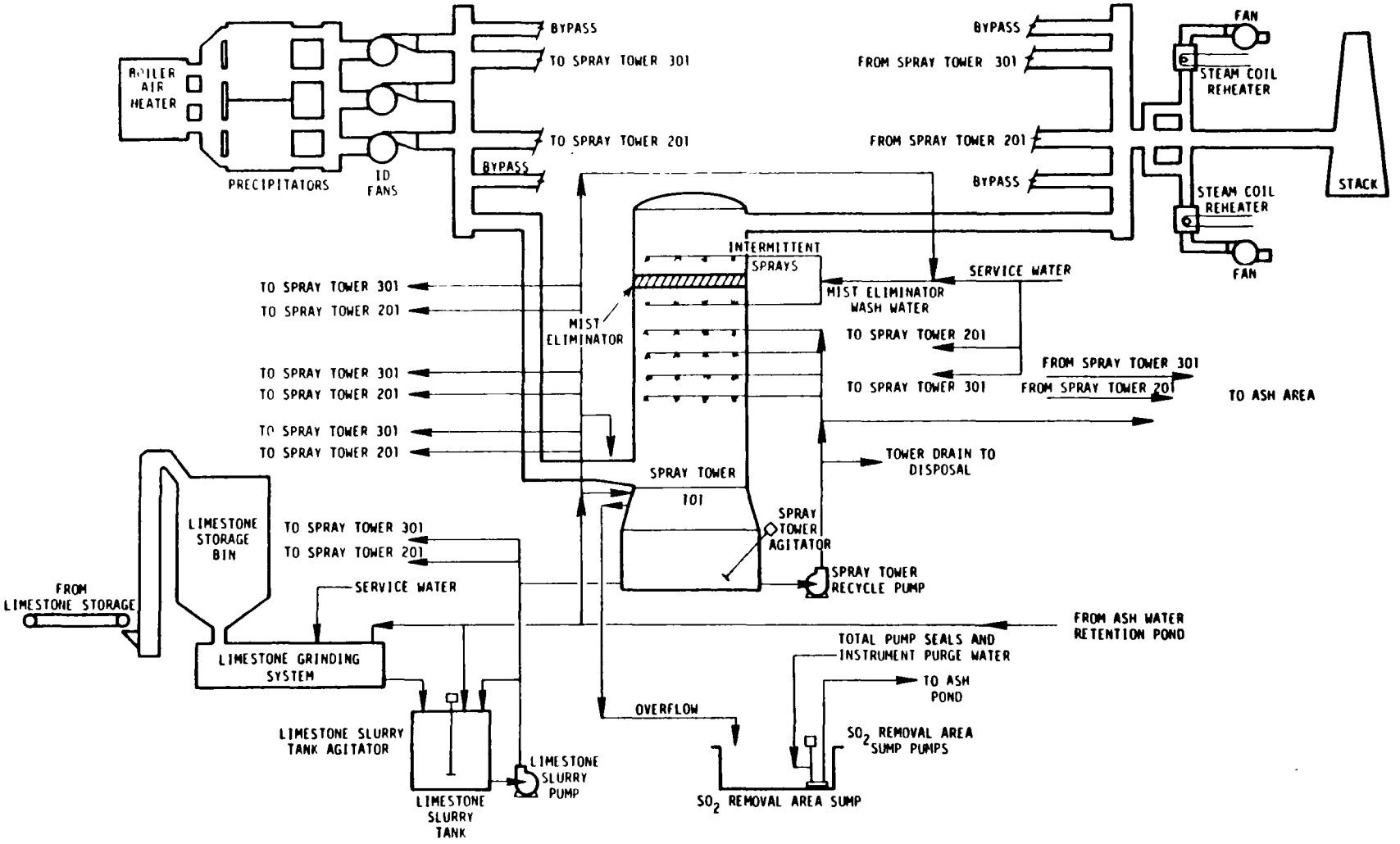

Texas Utilities,
Simplified Process Flow Diagram for Monticello 3

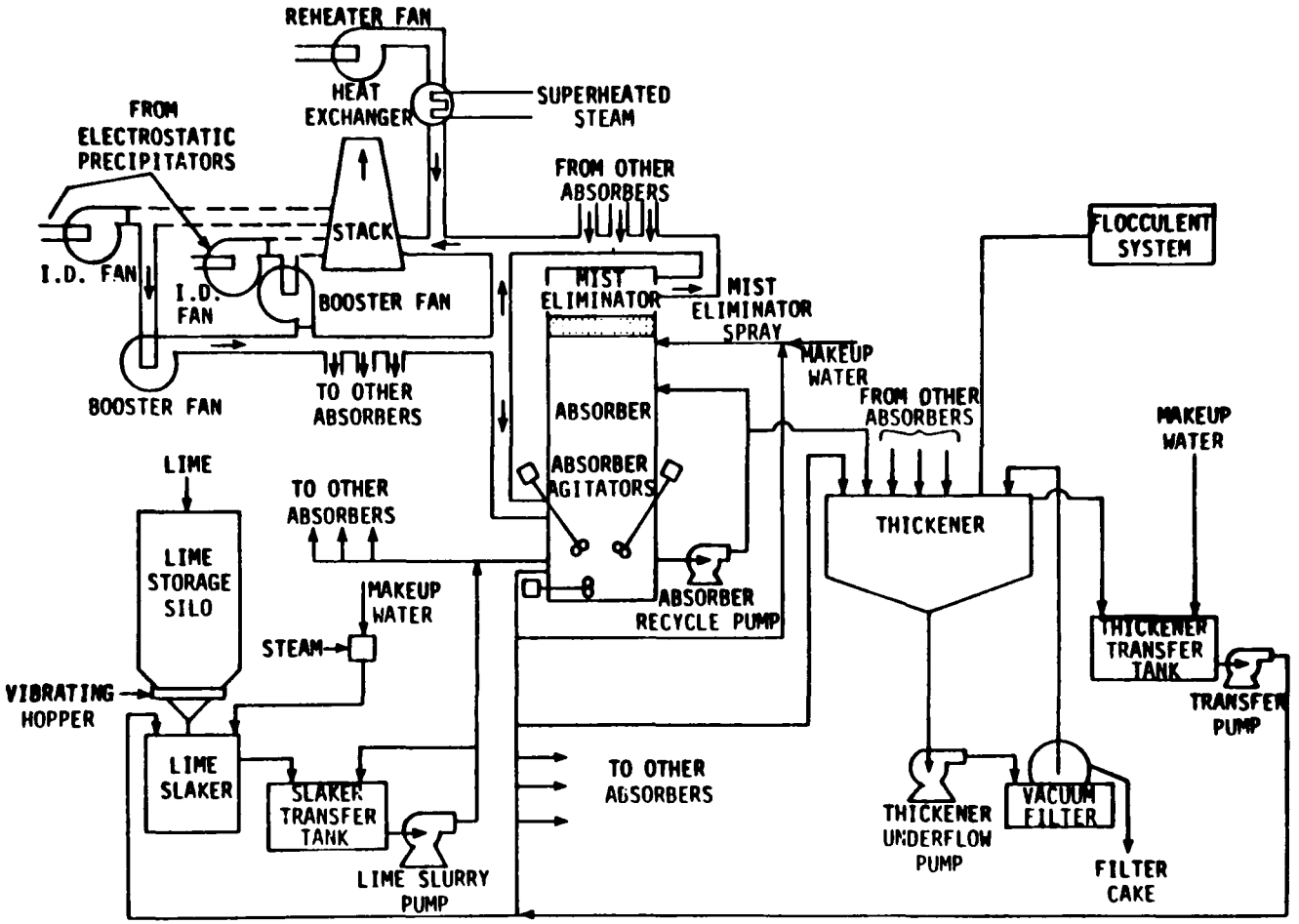

Utah Power & Light, FGD System Simplified Process Flow Diagram for Hunter 1, 2 or Huntington 1

APPENDIX D
DESIGN AND PERFORMANCE DATA FOR OPERATIONAL PARTICLE SCRUBBERS

COMPANY NAME	COMMONWEALTH EDISON	
PLANT NAME	WILL COUNTY	
UNIT NUMBER	1	
CITY	ROMEOVILLE	
STATE	ILLINOIS	
REGULATORY CLASSIFICATION	E	
PARTICULATE EMISSION LIMITATION - NG/J	86.	(.200 LB/MMBTU)
SO2 EMISSION LIMITATION - NG/J	774.	(1.800 LB/MMBTU)
NOX EMISSION LIMITATION - NG/J	******	(****** LB/MMBTU)
NET PLANT GENERATING CAPACITY - MW	1147	
GROSS UNIT GENERATING CAPACITY - MW	167	
NET UNIT GENERATING CAPACITY W/FGD - MW	137	
NET UNIT GENERATING CAPACITY WO/FGD - MW	144	
EQUIVALENT SCRUBBED CAPACITY - MW	167	
** UNIT DATA - BOILER AND STACK		
BOILER SUPPLIER	BABCOCK & WILCOX	
BOILER TYPE	CYCLONE	
BOILER SERVICE LOAD	CYCLING	
DESIGN BOILER FLUE GAS FLOW - CU.M/S	363.36	(770000 ACFM)
BOILER FLUE GAS TEMPERATURE - C	179.4	(355 F)
STACK HEIGHT - M	107.	(350 FT)
STACK SHELL	NR	
STACK TOP DIAMETER - M	3.8	(12.4 FT)
** FUEL DATA		
FUEL TYPE	COAL	
FUEL GRADE	******	
AVERAGE HEAT CONTENT - J/G	22260.	(9570 BTU/LB)
RANGE HEAT CONTENT - BTU/LB		9100-10500
AVERAGE ASH CONTENT - %	7.40	
RANGE ASH CONTENT - %	3.0-16.0	
AVERAGE MOISTURE CONTENT - %	********	
RANGE MOISTURE CONTENT - %	******	
AVERAGE SULFUR CONTENT - %	1.50	
RANGE SULFUR CONTENT - %	0.3-4.5	
AVERAGE CHLORIDE CONTENT - %	********	
RANGE CHLORIDE CONTENT - %	******	
*** PARTICLE CONTROL		
** MECHANICAL COLLECTOR		
NUMBER	0	
TYPE	NONE	
** FABRIC FILTER		
NUMBER	0	
TYPE	NONE	
** ESP		
NUMBER	1	
TYPE	COLD SIDE	
SUPPLIER	WESTERN PREC. DIVISION, JOY	
INLET FLUE GAS TEMPERATURE - C	179.4	(355 F)
PARTICLE REMOVAL EFFICENCY - %	90.0	
** PARTICLE SCRUBBER		
NUMBER	2	
INITIAL START-UP DATE	4/72	
GENERIC TYPE	VENTURI TOWER	
SPECIFIC TYPE	VARIABLE-THROAT/SIDE-MOVABLE BLADES	
TRADE NAME/COMMON NAME	N/A	
SUPPLIER	BABCOCK & WILCOX	
DIMENSIONS - FT	8.0 X 26.0 X 16.0	
SHELL GENERIC MATERIAL	CARBON STEEL	
SHELL SPECIFIC MATERIAL	AISI 1110	
LINER GENERIC MATERIAL	ORGANIC; INORGANIC	
LINER SPECIFIC MATERIAL	INERT FLAKE-FILLED VINYL ESTER; HYDRAULICALLY-BO	
GAS CONTACTING DEVICE TYPE	NONE	

COMMONWEALTH EDISON: WILL COUNTY 1 (CONT.)

LIQUID RECIRCULATION RATE - LITER/S	365.4	(5800 GPM)
L/G RATIO - LITER/CU.M	2.4	(18.0 GAL/1000ACF)
PH CONTROL ADDITIVE	LIMESTONE	
PRESSURE DROP - KPA	2.2	(9.0 IN-H2O)
SUPERFICIAL GAS VELOCITY - M/S	36.6	(120.0 FT/S)
INLET GAS FLOW RATE - CU.M/S	181.7	(385000 ACFM)
INLET GAS TEMPERATURE - C	179.4	(355 F)
PARTICLE REMOVAL EFFICIENCY - %	98.0	
ENERGY CONSUMPTION - %	4.2	

PERFORMANCE DATA

PERIOD	MODULE	AVAILABILITY	OPERABILITY	RELIABILITY	UTILIZATION	% REMOVAL SO2	% REMOVAL PART.	PER HOURS	BOILER HOURS	FGD HOURS	CAP. FACTOR
2/72	SYSTEM							696			

** PROBLEMS/SOLUTIONS/COMMENTS

IN FEBRUARY 1972 THE BABCOCK & WILCOX WET LIMESTONE FGD SYSTEM AT WILL COUNTY COMMENCED OPERATION. THE LONGEST PERIOD OF CONTINUOUS OPERATION WAS 23 DAYS WITH ONE OF THE TWO MODULES. THE SO2 REMOVAL EFFICIENCY WAS ABOUT 85% AND THE PARTICULATE MATTER REMOVAL EFFICIENCY WAS ABOUT 98%. THE SYSTEM WAS PLAGUED WITH MANY MECHANICAL PROBLEMS. THE MAIN PROBLEMS ASSOCIATED WITH THE FGD SYSTEM WERE PLUGGING OF THE MIST ELIMINATORS, CORROSION OF THE REHEATER TUBES AND SLUDGE DISPOSAL. TO SOLVE THE MIST ELIMINATOR AND REHEATER PROBLEMS, A CONSTANT UNDERSPRAY AND INTERMITTENT OVERSPRAY WERE USED TO WASH ALL THE MIST ELIMINATOR COMPARTMENTS. THE REHEATER UNIT WAS ALSO RETUBED.
DURING THE FIRST TWO MONTHS OF 1975 MODULE A WAS OPERATIONAL WHEN NEEDED WHILE MODULE B WAS UNDERGOING MODIFICATIONS.

3/72	A					.0					
	B					35.0					
	SYSTEM							744			

** PROBLEMS/SOLUTIONS/COMMENTS

IN MARCH 1972 MODULE A WAS DOWN FOR REPAIRS AND MODIFICATION OF THE MIST ELIMINATOR WASH PIPING ASSEMBLY. MODULE B WAS REMOVED EVERY TWO OR THREE DAYS TO HAND WASH THE MIST ELIMINATOR.

OTHER PROBLEMS ENCOUNTERED DURING THE MONTH INCLUDED VIBRATION OF THE REHEATER TUBE BUNDLES, RAPID EROSION OF THE SCRUBBER SPRAY NOZZLES, AND PLUGGING OF THE VENTURI NOZZLES.

4/72	A					34.0					
	B					14.0					
	SYSTEM							720			

** PROBLEMS/SOLUTIONS/COMMENTS

MODULE A WAS OUT OF SERVICE FOR SIX DAYS IN APRIL BECAUSE OF A NEAR-RUPTURE OF A VENTURI PIPE EXPANSION JOINT AND HEAVY BUILDUP OF SOLIDS ON THE MIST ELIMINATOR.

MODULE B WAS OUT OF SERVICE MOST OF THE TIME FOR SIMILAR REPAIR OF THE VENTURI PIPE EXPANSION JOINT, AND FOR MODIFICATION OF THE REHEATER UNIT AND MIST ELIMINATOR WASH SYSTEM.

5/72	A					70.0					
	B					32.0					
	SYSTEM							744			

** PROBLEMS/SOLUTIONS/COMMENTS

MODULE B WAS OUT OF SERVICE FOR TWO WEEKS IN MAY TO REBRACE THE REHEAT, INSTALL UNDERSPRAY NOZZLES ON THE MIST ELIMINATOR, AND TO INSTALL HEAVIER SCREENS IN THE SUMP.

COMMONWEALTH EDISON: WILL COUNTY 1 (CONT.)

PERIOD	MODULE	AVAILABILITY	OPERABILITY	RELIABILITY	UTILIZATION	% REMOVAL SO2	% REMOVAL PART.	PER BOILER HOURS	FGD HOURS	CAP. FACTOR
				PERFORMANCE DATA						

REHEATER PLUGGING DURING THE MONTH CAUSED ADDITIONAL OUTAGES.

6/72	A		8.0							
	B		31.0							
	SYSTEM							720		

** PROBLEMS/SOLUTIONS/COMMENTS

DURING JUNE BOTH MODULES WERE OUT OF SERVICE PART OF THE MONTH DUE TO A HIGH DIFFERENTIAL PRESSURE ACROSS THE MIST ELIMINATORS AND PLUGGING OF THE MIST ELIMINATORS DUE TO A LEAKING BYPASS VALVE.

THE RUBBER LINER IN MODULE A WAS REPLACED DURING THE MONTH.

7/72	SYSTEM							744		
8/72	A		79.0							
	B		21.0							
	SYSTEM							744		

** PROBLEMS/SOLUTIONS/COMMENTS

A TWO DAY OUTAGE DURING AUGUST WAS NECESSARY TO UNPLUG THE VENTURI NOZZLES AND THE MIST ELIMINATOR OF MODULE A.

MODULE B WAS OUT OF SERVICE 22 DAYS FOR CLEANING OF THE MIST ELIMINATOR AND REHEATER, INSTALLATION OF OVERHEAD SPRAY NOZZLES AND REPLACEMENT OF SECTIONS OF THE MIST ELIMINATOR.

THE BOILER WAS SHUTDOWN FOR TWO DAYS TO REPAIR THE TURBINE/GENERATOR.

9/72	A		.0							
	B		30.0							
	SYSTEM							720		

** PROBLEMS/SOLUTIONS/COMMENTS

THE BOILER WAS OFF LINE FROM SEPTEMBER 1 TO SEPTEMBER 5 DUE TO A LACK OF DEMAND.

AN ID FAN PROBLEM CAUSED UNSTABLE OPERATION DURING THE MONTH.

MODULE A WAS OUT OF SERVICE IN SEPTEMBER DUE TO THE NECESSARY MODIFICATION OFTHE REHEATER AND TO REPAIR THE RECYCLE TANK SCREENS.

10/72	A		.0							
	B		.0							
	SYSTEM							744		

** PROBLEMS/SOLUTIONS/COMMENTS

DURING OCTOBER THE BOILER WAS OUT OF SERVICE THE ENTIRE MONTH.

MODULES A AND B WERE OUT OF SERVICE DUE TO THE INSTALLATION OF THE REHEATER BAFFLE PLATES TO DAMPEN VIBRATIONS AND ALSO THE INSTALLATION OF AN EXPERIMENTAL MIST ELIMINATOR WASH SYSTEM.

11/72	A		.0							
	B		.0							
	SYSTEM							720		

COMMONWEALTH EDISON: WILL COUNTY 1 (CONT.)

PERIOD	MODULE	AVAILABILITY	OPERABILITY	RELIABILITY	UTILIZATION	% REMOVAL SO2	% REMOVAL PART.	PER HOURS	BOILER HOURS	FGD HOURS	CAP. FACTOR
		PERFORMANCE DATA									
	** PROBLEMS/SOLUTIONS/COMMENTS										
		THE BOILER REMAINED OUT OF SERVICE DURING THE MONTH OF NOVEMBER.									
		MODULES A AND B REMAINED OUT OF SERVICE DUE TO UNSTABLE OPERATIONS OF THE BOILER.									
12/72	A		22.0								
	B		30.0								
	SYSTEM								744		
	** PROBLEMS/SOLUTIONS/COMMENTS										
		MODULES A AND B OPERATED INTERMITTENTLY DURING DECEMBER DUE TO TESTING OF THE ESP AND MISCELLANEOUS INSTRUMENT PROBLEMS.									
1/73	A		.0								
	B		.0								
	SYSTEM								744		
	** PROBLEMS/SOLUTIONS/COMMENTS										
		DURING JANUARY MODULES A AND B WERE OUT OF SERVICE THE ENTIRE MONTH TO PERFORM SOME NECESSARY REPAIRS AND MODIFICATIONS TO THE SYSTEM.									
2/73	A		22.0								
	B		24.0								
	SYSTEM								672		
	** PROBLEMS/SOLUTIONS/COMMENTS										
		DURING FEBRUARY MODULES A AND B REMAINED OUT OF SERVICE DUE TO CRACKS IN THE INLET DUCTWORK OF THE BOOSTER FAN.									
		THE IMPROPER INSTALLATION OF THE MIST ELIMINATOR IN MODULE B CAUSED PLUGGING IN THE REHEATER.									
3/73	A		65.0								
	B		11.0								
	SYSTEM								744		
	** PROBLEMS/SOLUTIONS/COMMENTS										
		MODULE A WAS OUT OF SERVICE FOR FIVE DAYS IN MARCH DUE TO PLUGGING OF THE MIST ELIMINATOR.									
		DURING MARCH THE BOILER WAS OUT OF SERVICE FOR APPROXIMATELY FOUR DAYS DUE TO AN INSPECTION.									
		MODULE B WAS OUT OF SERVICE PART OF THE MONTH DUE TO REHEATER TUBE LEAKS.									
4/73	A		6.0								
	B		13.0								
	SYSTEM								720		
	** PROBLEMS/SOLUTIONS/COMMENTS										
		DURING APRIL PROBLEMS OCCURRED DUE TO THE DEPOSITS OF CALCIUM SULFATE SCALE ON THE REHEATER TUBES OF MODULE A.									
		PERSISTING PROBLEMS WITH THE MIST ELIMINATOR WERE ENCOUNTERED DURING THE MONTH.									

COMMONWEALTH EDISON: WILL COUNTY 1 (CONT.)

PERIOD	MODULE	AVAILABILITY	OPERABILITY	RELIABILITY	UTILIZATION	% REMOVAL SO2	% REMOVAL PART.	PER HOURS	BOILER HOURS	FGD HOURS	CAP. FACTOR
		PERFORMANCE DATA									
5/73	A		.0								
	B		.0								
	SYSTEM							744			
	** PROBLEMS/SOLUTIONS/COMMENTS										
		MODULES A AND B WERE OUT OF SERVICE FOR THE ENTIRE MONTH OF MAY.									
6/73	A		16.0								
	B		.0								
	SYSTEM							720			
	** PROBLEMS/SOLUTIONS/COMMENTS										
		DURING JUNE BOILER-RELATED PROBLEMS WERE RESPONSIBLE FOR MOST OF THE OUTAGE TIME OF MODULE A. MODULE B WAS TAKEN OUT OF SERVICE TO ALLOW CONCENTRATION ON THE PROBLEMS OF MODULE A.									
7/73	A		51.0								
	B		.0								
	SYSTEM							744			
	** PROBLEMS/SOLUTIONS/COMMENTS										
		DURING JULY PROBLEMS WERE ENCOUNTERED WITH REHEATER TUBE LEAKS ON MODULE A.									
		HIGH FAN VIBRATIONS CAUSED OUTAGE TIME DURING JULY.									
8/73	A		19.0								
	B		.0								
	SYSTEM							744			
	** PROBLEMS/SOLUTIONS/COMMENTS										
		DURING AUGUST MORE REHEATER TUBE LEAKS ON MODULE A ATTRIBUTED TO CHLORIDE CORROSION ATTACK.									
9/73	A		.0								
	B		.0								
	SYSTEM							720			
	** PROBLEMS/SOLUTIONS/COMMENTS										
		DURING SEPTEMBER MODULES A AND B REMAINED OUT OF SERVICE. DURING THIS TIME THE CHICAGO FLY ASH CO. FINISHED CLEANING AND TREATING THE NORTHEAST HALF OF THE SLUDGE POND.									
10/73	A		32.0								
	B		.0								
	SYSTEM							744			
	** PROBLEMS/SOLUTIONS/COMMENTS										
		DURING OCTOBER MODULE A TRIPPED SEVERAL TIMES DUE TO BAD LIMIT SWITCHES IN THE BYPASS AND THE BLOCK DAMPERS.									
		THE BOILER WAS TAKEN OUT OF SERVICE TO BALANCE THE BOOSTER I.D. FAN.									
11/73	A		51.0								
	B		.0								
	SYSTEM							720			

COMMONWEALTH EDISON: WILL COUNTY 1 (CONT.)

PERIOD	MODULE	AVAILABILITY	OPERABILITY	RELIABILITY	UTILIZATION	% REMOVAL SO2	% REMOVAL PART.	PER HOURS	BOILER HOURS	FGD HOURS	CAP. FACTOR
	** PROBLEMS/SOLUTIONS/COMMENTS										
		DURING NOVEMBER PROBLEMS OCCURRED WITH THE MIST ELIMINATOR DUE TO POOR GAS DISTRIBUTION.									
		MODULE A WAS TAKEN OUT OF SERVICE FOR AN INSPECTION. CLEANING AND MODIFICATIONS WERE ALSO DONE DURING NOVEMBER.									
12/73	A		.0								
	B		.0								
	SYSTEM									744	
	** PROBLEMS/SOLUTIONS/COMMENTS										
		MODULES A AND B WERE OUT OF SERVICE DURING DECEMBER DUE TO MODIFICATIONS AND MAINTENANCE TO THE ISOLATION VALVES, PUMPS, VENTURI THROATS AND THE MIST ELIMINATOR.									
1/74	A		.0								
	B		.0								
	SYSTEM									744	
	** PROBLEMS/SOLUTIONS/COMMENTS										
		MODULES A AND B WERE OUT OF SERVICE DUE TO FREEZING IN THE 10-INCH-DIAMETER, 4400 FT. LINE BETWEEN THE MODULES AND THE POND.									
		DAMAGE OCCURRED TO THE SUMP PUMPS AND ALSO SOME OTHER INSTRUMENTS DUE TO THE FREEZING.									
2/74	A		.0								
	B		.0								
	SYSTEM									672	
	** PROBLEMS/SOLUTIONS/COMMENTS										
		DURING FEBRUARY THE FROZEN PIPELINES WERE THAWED, REANCHORED AND RETURNED TO SERVICE. THE INSTRUMENTS DAMAGED BY THE FREEZING WERE REPAIRED.									
		MODULE A REMAINED OUT OF SERVICE UNTIL THE ARRIVAL OF THE SECOND-STAGE MIST ELIMINATOR.									
3/74	A		21.0								
	B		.0								
	SYSTEM									744	
	** PROBLEMS/SOLUTIONS/COMMENTS										
		MODULE A WAS OPERABLE MARCH 20, BUT WAS NOT RETURNED TO SERVICE UNTIL MARCH 27 DUE TO THE BOILER BEING OUT OF SERVICE.									
4/74	A		72.0								
	B		.0								
	SYSTEM									720	
	** PROBLEMS/SOLUTIONS/COMMENTS										
		DURING APRIL MODULE A OPERATED ON LOW-SULFUR COAL FOR 23 CONSECUTIVE DAYS. TWO SHORT INSPECTION OUTAGES OCCURRED DURING THAT TIME.									
		THE SUMP SCREEN FROM MODULE B WAS SUBSTITUTED FOR THE DAMAGED SCREEN IN MODULE A.									

COMMONWEALTH EDISON: WILL COUNTY 1 (CONT.)

PERIOD	MODULE	AVAILABILITY	OPERABILITY	RELIABILITY	UTILIZATION	% REMOVAL SO2	% REMOVAL PART.	PER HOURS	BOILER HOURS	FGD HOURS	CAP. FACTOR
5/74	A		93.0								
	B		.0								
	SYSTEM							744			

** PROBLEMS/SOLUTIONS/COMMENTS

DURING MAY MODULE A OPERATED MOST OF THE TIME ON HIGH-SULFUR COAL. DURING THIS TIME A FEW SHORT OUTAGES OCCURRED FOR INSPECTIONS.

6/74	A		55.0								
	B		.0								
	SYSTEM							720			

** PROBLEMS/SOLUTIONS/COMMENTS

DURING JUNE MODULE A OPERATED FOR APPROXIMATELY 300 HOURS.

TWO WEEKS OF OUTAGE TIME WAS NECESSARY TO MAKE REPAIRS TO THE VENTURI THROAT DRIVE.

7/74	A		96.0								
	B		.0								
	SYSTEM							744			

** PROBLEMS/SOLUTIONS/COMMENTS

MODULE B WILL REMAIN OUT OF SERVICE UNTIL SATISFACTORY OPERATION OF MODULE A IS ACHIEVED.

8/74	A		91.0								
	B		.0								
	SYSTEM							744			

** PROBLEMS/SOLUTIONS/COMMENTS

DURING AUGUST THE BOILER WAS TAKEN OFF LINE THREE TIMES DUE TO LACK OF DEMAND.

TWO OUTAGES OCCURRED DUE TO LEAKS IN THE STEAM PIPING.

ONE OUTAGE OCCURRED DUE TO THE BALANCING OF A FAN.

9/74	A		85.0								
	B		.0								
	SYSTEM							720			

** PROBLEMS/SOLUTIONS/COMMENTS

DURING SEPTEMBER MODULE A WAS OUT OF SERVICE ONCE FOR THE REPAIR OF A SUPERHEATER LEAK AND ONCE FOR CLEANING OF DEPOSITS FROM THE VENTURI THROAT.

10/74	A		94.0								
	B		.0								
	SYSTEM							744			

** PROBLEMS/SOLUTIONS/COMMENTS

DURING OCTOBER REHEATER LEAKS CAUSED MODULE A TO BE OUT OF SERVICE TWICE. ADDITIONAL OUTAGE TIME WAS A RESULT OF A BOILER OUTAGE AND A INSPECTION OF THE MODULE.

11/74	A		97.0								

PERIOD	MODULE	AVAILABILITY	OPERABILITY	RELIABILITY	UTILIZATION	% REMOVAL SO2	% REMOVAL PART.	PER HOURS	BOILER HOURS	FGD HOURS	CAP. FACTOR
	B		.0								
	SYSTEM							720			

** PROBLEMS/SOLUTIONS/COMMENTS

MODULE A WAS SHUT DOWN THREE TIMES DURING NOVEMBER. TWICE DUE TO LACK OF DEMAND AND ONCE FOR AN INSPECTION.

12/74	A		99.0								
	B		.0								
	SYSTEM							744			

** PROBLEMS/SOLUTIONS/COMMENTS

MODULE A WAS TAKEN OFF LINE PART OF THE MONTH TO REPAIR THE VALVE IN THE SPENT LIQUOR LINE TO THE POND AND ALSO FOR AN INSPECTION.

1/75	A		99.0								
	B		.0								
	SYSTEM							744			

** PROBLEMS/SOLUTIONS/COMMENTS

MODIFICATIONS OF MODULE B ARE STILL CONTINUING.

DURING JANUARY MODULE A WAS OUT OF SERVICE TWICE; ONCE FOR AN INSPECTION AND ONCE DUE TO LACK OF DEMAND.

2/75	A		99.0								
	B		.0								
	SYSTEM							672			

** PROBLEMS/SOLUTIONS/COMMENTS

DURING FEBRUARY MODULE A WAS OUT OF SERVICE TWO TIMES DUE TO LACK OF DEMAND AND ALSO FOR AN INSPECTION. THE INSPECTION SHOWED THAT CONDITIONS INSIDE THE MODULE WERE THE SAME AS BEFORE.

DURING THE MONTH A SMALL REHEATER LEAK IN A STAINLESS STEEL BUNDLE CAUSED THE SYSTEM TO SHUT DOWN.

DURING THE INSPECTION OF MODULE A, THE UNDERWASH NOZZLES WERE CLEANED AND A SMALL SECTION FO THE MIST ELIMINATOR WAS REPLACED.

CHICAGO FLYASH IS TREATING MATERIAL FROM THE SYSTEM WITH PORTLAND CEMENT AND FLYASH AND DUMPING THE TREATED MATERIAL INTO THE NORTH HALF OF THE HOLDING BASIN.

3/75	A	94.0	99.2		81.2						
	B	.0	.0		.0						
	SYSTEM							744	609		

** PROBLEMS/SOLUTIONS/COMMENTS

A VENTURI HOSE LEAK FORCED MODULE A OUT ONCE.

MODULE B WAS OUT OF SERVICE TWICE FOR NO DEMAND AND ONCE AS A RESULT OF AN ACCIDENTAL 50 MINUTE TRIP.

COAL BURNED THIS MONTH AVERAGED LESS THAN ONE PERCENT SULFUR.

4/75	A	37.0	39.5		35.0						
	B	.0	.0		.0						
	SYSTEM							720	638		

COMMONWEALTH EDISON: WILL COUNTY 1 (CONT.)

PERIOD	MODULE	AVAILABILITY	OPERABILITY	RELIABILITY	UTILIZATION	% REMOVAL SO2	% REMOVAL PART.	PER HOURS	BOILER HOURS	FGD HOURS	CAP. FACTOR
	** PROBLEMS/SOLUTIONS/COMMENTS										
		CHICAGO FLY ASH IS TREATING MATERIAL FROM THE SCRUBBER WITH LIME AND FLY ASH AND DUMPING IT INTO THE HOLDING BASIN.									
		A BOILER OUTAGE FORCED MODULE A OUT OF SERVICE ONCE THIS MONTH (MODULE B WAS ALREADY OUT OF SERVICE).									
		COAL BURNED THIS MONTH WAS RECLAIM COAL AND VARIED IN SULFUR CONTENT.									
5/75	A	84.5	84.5		84.5						
	B	37.1	37.1		37.1						
	SYSTEM							744	744		
	** PROBLEMS/SOLUTIONS/COMMENTS										
		MODULE B WAS IN SERVICE ON MAY 20 FOR THE FIRST TIME SINCE APRIL 13, 1973.									
		RECIRCULATION TANK MIXERS.									
		MODULE A (WHICH WAS THE ONLY ONE OPERATING) WAS FORCED OUT TWICE IN APRIL TO AVOID POND OVERBOARDING INTO THE DES PLAINES RIVER. THE SECOND OUTAGE LASTED UNTIL MAY 5. DURING THE PAST SEVERAL MONTHS OF GENERALLY CONTINUOUS OPERATION OF MODULE A. IT HAS BECOME APPARENT THAT THE PRESENT LIQUID CIRCULATING SYSTEM CANNOT BE OPERATED IN A CONTINUOUSLY CLOSED CYCLE. THE WATER IMBALANCE POSES A HIGH RISK OF OVERBOARDING FROM THE SLUDGE POND DURING LONG PERIODS OF SUSTAINED OPERATON. THE FOLLOWING REVISIONS HAVE BEEN MADE TO REDUCE THE WATER IMBALANCE: 1. THE PUMP GLAND WATER FLOWS HAVE BEEN CUT FROM 10 GPM TO 5 GPM. 2. THE SCRUBBER HOUSE SERVICE WATER FILTER BACKWASH HAS BEEN ROUTED OUT OF THE SYSTEM. 3. THE CONTINUOUS UNDERSPRAY HAS BEEN CHANGED TO AN INTERMITTENT SPRAY 5 MINUTES ON, 5 MINUTES OFF.									
		THE THICKENER HAS BEEN DOWN SINCE APRIL 21 DUE TO A BROKEN GEAR AND A STUCK SWEEP ARM. THE THICKENER HAS BEEN BYPASSED AND THE SLUDGE IS GOING TO THE POND.									
		DURING MAY, MODULE A WAS OUT FOR 45 MINUTES DUE TO A DAMPER TRIP.									
		MODULE A WAS OUT ONCE FOR SPRAY NOZZLE CLEANING.									
		MODULE B WAS OUT TWICE AFTER START UP, ONCE FOR A VENTURI PUMP TRIP AND ONCE FOR A RECIRCULATION TANK LEVEL TRIP.									
		CHICAGO FLY ASH IS TREATING THE MATERIAL FROM THE SCRUBBER WITH LIME AND FLY ASH AND DUMPING IT INTO THE HOLDING BASIN. A MIXER HAS BEEN INSTALLED AT THE THICKENER, WHICH ENABLES THEM TO SUBSTITUTE SEALED DUMP TRUCKS FOR THE CEMENT TRUCKS WHICH WERE USED IN THE PAST FOR MIXING AND TRANSPORTING THE WASTE MATERIAL TO THE HOLDING BASIN.									
		COAL BURNED THIS MONTH VARIED GREATLY IN SULFUR CONTENT, RANGING FROM LOW SULFUR WESTERN COAL TO HIGH SULFUR ILLINOIS COAL.									
6/75	A	64.1	60.6		54.1						
	B	85.5	84.6		75.4						
	SYSTEM							720	642		
	** PROBLEMS/SOLUTIONS/COMMENTS										
		A REHEATER PLUGGAGE INSPECTION FORCED ONE MODULE A OUTAGE.									
		A LOW LEVEL TRIP CAUSED A 35 MINUTE OUTAGE, AND NO DEMAND ACCOUNTED FOR TWO									

PERIOD	MODULE	AVAILABILITY	OPERABILITY	RELIABILITY	UTILIZATION	% REMOVAL SO2	% REMOVAL PART.	PERFORMANCE DATA PER HOURS	BOILER HOURS	FGD HOURS	CAP. FACTOR

MORE MODULE A OUTAGES.

MODULE B WAS OUT FOR 95 HOURS TO CLEAN THE BOOSTER FAN AND DEMISTER.

HIGH BOOSTER FAN VIBRATIONS CAUSED MODULE B TO SHUT DOWN ON JUNE 30.

DURING THIS MONTH HIGH SULFUR COAL WAS BURNED IN A TWO WEEK TEST, AND LOW SULFUR COAL WAS BURNED THE REST OF THE MONTH.

7/75	A	.0		.0		.0					
	B	79.2		79.4		73.5					
	SYSTEM								744	689	

** PROBLEMS/SOLUTIONS/COMMENTS

CHICAGO FLY ASH IS TREATING THE SCRUBBER WASTE MATERIAL WITH LIME AND FLY ASH AND DUMPING IT INTO THE ON SITE HOLDING BASIN. THE MATERIAL FROM THE HOLDING BASIN IS BEING TRUCKED TO AN OFF SITE DUMP.

MODULE B WAS OUT ONCE (30 MINUTES) TO REPAIR A MINOR STEAM HEADER LEAK.

MODULE B WAS OUT ONCE DUE TO NO DEMAND.

LOW SULFUR COAL WAS BURNED MOST OF THIS MONT, WITH HIGH SULFUR COAL BEING BURNED DURING THE LAST WEEK OF THE MONTH.

8/75	A	.0		.0		.0					
	B	93.5		100.0		76.4					
	SYSTEM								744	565	

** PROBLEMS/SOLUTIONS/COMMENTS

IN JUNE, MODULE A ENCOUNTERED PLUGGAGE IN THE DEMISTER, WHICH REQUIRED ITS REPLACEMENT. THE WORK WAS COMPLETED IN AUGUST.

MODULE A WENT OUT OF SERVICE ON JUNE 20 AND REMAINED OUT THROUGH AUGUST DUE TO MASSIVE REHEATER LEAKS. THERE IS PRESENTLY A HOLD ON THE NEW REHEATER ORDER BECAUSE OF MATERIAL FAILURES EXPERIENCED IN MODULE B'S CARBON STEEL REHEATER.

MODULE B SUFFERED TWO OUTAGES IN JULY AND ONE IN AUGUST BECAUSE OF REHEATER TUBE LEAKS. THE FAILURES WERE DUE TO VIBRATION FATIGUE. THE REHEATER, WHICH WAS INSTALLED IN MAY, HAS LOST SIX OF ITS TWELVE TUBE BUNDLES SO FAR. THE LENGTH OF TIME THAT THE TUBES HAVE LASTED WOULD SEEM TO INDICATE THAT THERE IS A DIESIGN RELATED MATERIAL DEFICIENCY. THREE OF THE TUBE BUNDLES WERE REPLACED WITH MARGINAL BUNDLES LEFT OVER FROM MODULE A.

A SMALL STEAM HEADER LEAK CAUSED ONE MODULE B OUTAGE.

MODULE B WAS OUT FOUR TIMES FOR NO DEMAND AND ONCE FOR A LOW FLOW TRIP.

HIGH SULFUR COAL WAS BURNED ALL MONTH, CAUSING AN INCREASE IN SLUDGE PRODUCTION WHICH HAS FORCED A MINIMUM SIX DAY A WEEK, TEN HOUR A DAY SLUDGE DISPOSAL OPERATION. THE SLUDGE IS BEING TREATED WITH LIME AND FLY ASH AND BEING DUMPED INTO THE ON SITE HOLDING POND. STABILIZED MATERIAL IS BEING TRUCKED FROM THE POND TO AN OFF SITE DISPOSAL AREA.

9/75	A										
	B										
	SYSTEM								720		
10/75	A	.0		.0		.0					
	B	32.3		100.0		26.6					
	SYSTEM								744	194	

COMMONWEALTH EDISON: WILL COUNTY 1 (CONT.)

PERIOD	MODULE	PERFORMANCE DATA: AVAILABILITY	OPERABILITY	RELIABILITY	UTILIZATION	% REMOVAL SO2	% REMOVAL PART.	PER HOURS	BOILER HOURS	FGD HOURS	CAP. FACTOR
	** PROBLEMS/SOLUTIONS/COMMENTS										
		MODULE A WAS OFF THE ENTIRE 11 DAYS THE BOILER OPERATED THIS MONTH, WAITING FOR ITS NEW REHEATER, WHICH HAS NOW BEEN RELEASED FOR MANUFACTURING BY SMED.									
		MODULE B HAD TWO OUTAGES, ONE FOR NO DEMAND AND ONE MINOR 15 MINUTE TRIP.									
		HIGH SULFUR COAL WAS BURNED THIS MONTH WHEN THE SCRUBBER WAS IN SERVICE.									
		THE SLUDGE IS BEING TREATED WITH LIME AND FLY ASH AND HAULED TO AN OFF SITE DISPOSAL AREA.									
11/75	A	.0			.0						
	B	.0			.0						
	SYSTEM							720	0		
12/75	A	.0			.0						
	B	.0			.0						
	SYSTEM							744	0		
1/76	A	.0			.0						
	B	.0			.0						
	SYSTEM							744	0		
2/76	A	.0			.0						
	B	.0			.0						
	SYSTEM							696	0		
3/76	A	30.1	45.2		18.8						
	B	8.8	20.4		8.5						
	SYSTEM							744	309		
	** PROBLEMS/SOLUTIONS/COMMENTS										
		UNIT 1 WAS DOWN FROM OCTOBER 11 THROUGH MARCH 19 FOR ITS BOILER TURBINE AND SCRUBBER OVERHAUL. THE MAJOR ITEMS TO BE ACCOMPLISHED DURING THE OUTAGE WERE: 1. SIMPLIFICATION OF THE MILLING SYSTEM CONTROL. 2. PULLING AND CLEANING OF THE MODULE B REHEATER AND RETURNING IT REPLACED WITH MARGINAL BUNDLES LEFT OVER FROM MODULE A. 3. CLEANING OF THE POND PUMP BAY. 4. REMOVAL OF THE VENTURI AND ABSORBER PUMP CHECK VALVES (ONE OF THEM FAILED LAST SPRING AND DESTROYED A PUMP LINER AND IMPELLER). 5. CLEANING AND REPAIR OF THE VENTURI NOZZLES AND SUPPORTS. 6. REPAIR OF CORRODED REHEATER SUPPORTS. 7. RESETTING AND ADJUSTMENT OF ALL DAMPERS. 8. REVISION OF SCRUBBER CONTROLS BY REMOVING THE CONTROLS NO LONGER USED OR NEEDED. 9. INSPECTION AND CLEANING OF THE ENTIRE SCRUBBER AND RELATED EQUIPMENT.									
		MODULE A WAS PUT INTO THE GAS PATH ON MARCH 22 AND REMAINED AVAILABLE FOR SERVICE THE REST OF THE MONTH.									
		MODULE B HAD TO REMAIN OUT OF SERVICE UNTIL MARCH 29 WHILE ITS REPAIRED REHEATER WAS INSTALLED.									
4/76	A	23.0	20.0		19.2						
	B		49.3		47.3						
	SYSTEM							720	691		

COMMONWEALTH EDISON: WILL COUNTY 1 (CONT.)

PERIOD	MODULE	AVAILABILITY	OPERABILITY	RELIABILITY	UTILIZATION	% REMOVAL SO2	% REMOVAL PART.	PER HOURS	BOILER HOURS	FGD HOURS	CAP. FACTOR
5/76	A	.0	.0		.0						
	SYSTEM							744	665		

** PROBLEMS/SOLUTIONS/COMMENTS

UNIT 1 RETURNED TO SERVICE APRIL 2 AFTER A SHORT TURBINE CONTROL OUTAGE. BOTH MODULES CAME ON LINE JUST BEFORE THE BOILER.

A FIVE DAY OUTAGE OF MODULE B WAS DUE TO REHEATER TUBE BUNDLE LEAKS.

SEVERAL MODULE B OUTAGES WERE DUE TO PLUGGED ABSORBER TANK SCREENS CAUSED BY MILL AND CLASSIFIER FAILURES WHICH ALLOWED ROCK TO GET INTO THE SYSTEM. MODULE B WAS THOROUGHLY CLEANED.

ONLY ONE ABSORBER PUMP IS BEING USED IN MODULE B, SINCE THE 1B2 PUMP LINER FAILED AS A RESULT OF A BROKEN DISCHARGE VALVE. A REPLACEMENT LINER IS BEING INSTALLED.

A SCRUBBER TESTING AND EVALUATING PROGRAM WAS STARTED THIS MONTH. MUCH OF THE LATTER TWO WEEKS OF THE MONTH WERE SPENT TRAINING THE TESTING PERSONNEL. THE PROGRAM WILL PROVIDE CHEMISTRY DATA AND OPERATING CHARACTERISTICS.

PERIOD	MODULE	AVAILABILITY	OPERABILITY	RELIABILITY	UTILIZATION	% REMOVAL SO2	% REMOVAL PART.	PER HOURS	BOILER HOURS	FGD HOURS	CAP. FACTOR
6/76	A	52.0	44.2		37.6						
	B	86.2	84.5		71.9						
	SYSTEM							720	612		

** PROBLEMS/SOLUTIONS/COMMENTS

A VENTRUI HOSE LEAK FORCED MODULE B OFF ONCE THIS MONTH.

MODULE B WAS TAKEN OUT OF SERVICE ONCE BECAUSE OF A PLUGGED ABSORBER TANK SCREEN.

MODULE B WAS OFF ONCE DUE TO A FOULED I.D. FAN.

MODULE B WAS OUT OF THE GAS PATH ONCE DUE TO NO DEMAND.

** PROBLEMS/SOLUTIONS/COMMENTS

MODULE A SUFFERED VENTURI PUMP LINER FAILURES ON APRIL 78 WHEN AN INLET 16 INCH BUTTERFLY ISOLATION VALVE BROKE APART AND FELL INTO THE VENTURI PUMP. BOTH THE A AND BACKUP AB VENTURI PUMP LINERS WERE DESTROYED. MODULE A REMAINED OUT SERVICE UNITL JUNE 9, WHEN THE LINERS WERE REPLACED.

MODULE A WAS OFF ONCE FOR SHEARED BYPASS DAMPER PINS.

I.D. BOOSTER FAN FOULING FORCED MODULE A OFF ONCE THIS MONTH FOR ABOUT 164 HOURS.

BOTH MODULES WERE OFF TWICE DUE TO NO DEMAND. DURING THESE OUTAGES, THE DEMISTERS WERE WASHED AND ABSORBER TRAY SCALE, IF ANY, WAS KNOCKED OFF.

MODULE B WAS OUT OF THE GAS PATH FOR SEVERAL SHORT VENTURI LOW FLOW TRIP OUTAGES DUE TO A PLUGGED, SCALED VENTURI TANK SCREEN. AT THE END OF THE MONTH, THE MODULE WAS TAKEN OUT TO CLEAN THE SCREEN.

THE MODULE B I.D. BOOSTER FAN REQUIRED CLEANING DURING THE MONTH.

THE REHEATER TUBES ARE SCALING, WHICH RESULTS IN A LOWER HEAT TRANSFER RATE RATE, AND THEREFORE INCREASES I.D. BOOSTER FAN FOULING. THE ONLY WAY TO CLEAN THE REHEATERS EFFECTIVELY IS TO REMOVE THEM, WHICH DEMANDS A SUBSTANTIAL OUTAGE.

COMMONWEALTH EDISON: WILL COUNTY 1 (CONT.)

PERIOD	MODULE	AVAILABILITY	OPERABILITY	RELIABILITY	UTILIZATION	% REMOVAL SO2	% REMOVAL PART.	PER HOURS	BOILER HOURS	FGD HOURS	CAP. FACTOR
		PERFORMANCE DATA									
7/76	A	19.9	.0		.0						
	B	86.2	90.0		72.3						
	SYSTEM							744	598		

** PROBLEMS/SOLUTIONS/COMMENTS

MODULE A WAS OFF THE FIRST PART OF THE MONTH DURING REPAIRS TO THE ABSORBER

THE LATTER PART OF THE MONTH THE MODULE WAS READY FOR SERVICE BUT WAS NOT OPERATED BECAUSE OF THICKENER-POND SLUDGE OVERLOADING.

MODULE B WAS FORCED OFF ONCE TO BALANCE THE I.D. BOOSTER FAN, AND ONCE TO WASH THE FAN.

MODULE B WAS OUT OF THE GAS PATH TWICE DUE TO NO DEMAND.

8/76	A	98.2	57.6		38.3						
	B	65.4	61.4		40.9						
	SYSTEM							744	495		

** PROBLEMS/SOLUTIONS/COMMENTS

MODULE A WAS OUT OF THE GAS PATH THE FIRST HALF OF THE MONTH T AVOID THICKENER-POND OVERLOADING.

DURING THE LATTER HALF OF THE MONTH, MODULE A WAS USED WITH THREE MINOR FORCED OUTAGES AND ONE FOUR DAY NO DEMAND OUTAGE.

MODULE B WAS OUT OF THE GAS PATH THREE TIMES DUE TO NO DEMAND.

LOSS OF CHEMICAL CONTROL CAUSED TWO MODULE A OUTAGES.

MODULE B WAS OFF FOR NINE DAYS DUE TO FOULING.

SPENT SLURRY VALVE REPAIRS FORCED A MODULE B OUTAGE.

ON AUGUST 12 THE OPERATING PH CONTROL SET POINT WAS REDUCED FROM 5.4 TO 5.1. IT IS BELIEVED THAT THIS LOWER PH IS THE CAUSE OF THE FOULING OUTAGE OF MODULE B ON AUGUST 21. MODULE A WAS ALSO OPERATED FOR THREE DAYS, AND IT, TOO, EXPERIENCED INCREASED SACLE FOULING. THE PH SET POINT WAS THEN INCREASED BACK TO 5.4.

9/76	A	42.3	28.7		22.6						
	B	79.4			59.9						
	SYSTEM							720	566		

** PROBLEMS/SOLUTIONS/COMMENTS

MODULE A WENT OFF ONCE DUE TO A LOW FLOW TRIP.

MODULE A WAS TAKEN OFF ONCE FOR CLEANING OF THE RECIRCULATION TANK AND PUMPS, AND INSPECTION OF PUMP ISOLATION VALVES.

A LINER LEAK IN 1A2 ABOSORBER PUMP ALSO FORCED MODULE A OFF.

MODULE A WAS OUT OF TH GAS PATH TWICE DUE TO NO DEMAND.

MODULE A WAS TAKEN OFF ONCE TO AVOID THICKENER-POND OVERLOADING.

SPENT SLURRY VALVE TROUBLE CAUSED TWO MODULE B OUTAGES.

10/76	A	27.9	28.9		37.9						

COMMONWEALTH EDISON: WILL COUNTY 1 (CONT.)

PERIOD	MODULE	AVAILABILITY	OPERABILITY	RELIABILITY	UTILIZATION	% REMOVAL SO2	% REMOVAL PART.	PER HOURS	BOILER HOURS	FGD HOURS	CAP. FACTOR
	B	76.4	56.2		54.8						
	SYSTEM							744	726		

** PROBLEMS/SOLUTIONS/COMMENTS

HIGH SULFUR ILLINOIS COAL WAS BURNED IN THE BOILER FROM MARCH THROUGH OCTOBER.

THE SCRUBBER WASTE MATERIAL WAS TREATED WITH LIME AND FLY ASH AND HAULED TO AN OFF SITE DISPOSAL AREA.

MODULE A OPERATED ON ONE ABSORBER PUMP, ALLOWING TESTING ON A LOWER ABSORBER FAN.

MODULE A WAS OUT OF THE GAS PATH ONCE FOR AN I.D. BOBOOSTER FAN TRIP.

WORK ON RECIRCULATION TANK LEVEL CONTROLS CAUSED A MODULE A OUTAGE.

MODULE B WAS FORCED OFF ONCE TO REPAIR A REHEATER HEADER LEAK.

ONE MODULE B OUTAGE WAS FOR VENTURI NOZZLE CLEANING.

MODULE B WENT OFF FOR A VENTURI LOW FLOW TRIP.

MODULE B REMAINED OUT OF SERVICE WHILE MODULE A WAS BEING TESTED TO AVOID THICKENER-POND OVERLOADING.

A VACUUM FILTER WAS TIED IN AT THE THICKENER.

11/76	A	20.1	25.6		20.1						
	B	72.2	69.6		4.7						
	SYSTEM							720	566		

** PROBLEMS/SOLUTIONS/COMMENTS

MODULE A OPERATED ON ONE ABSORBER PUMP DURING MODULE B OUTAGE.

MODULE B WAS FORCED OUT OF THE GAS PATH ONCE FOR A MILLING SYSTEM FAILURE.

MODULE B ENCOUNTERED A VENTURI HEADER LEAK.

THE VENTURI NOZZLES REQUIRED CLEANING DURING THE MONTH.

REPLACEMENT OF THE SPENT SLURRY VALVE NECESSITATED A MODULE OUTAGE.

MODULE B WAS OFF ONCE DUE TO A CHEMICAL SYSTEM UPSET.

MODULE B WAS OUT OF THE GAS PATH TWICE DUE TO NO DEMAND (MODULE A WAS NOT IN SERVICE AT THE TIME OF THE OUTAGE).

12/76	A	44.9	48.3		44.9						
	B	53.4	51.7		48.0						
	SYSTEM							744	692		

** PROBLEMS/SOLUTIONS/COMMENTS

DURING THE LAST WEEK OF NOVEMBER, THE 1A2 ABSORBER PUMP WAS TAKEN OUT OF SERVICE FOR OVERHAUL. THE REPAIRS WERE COMPLETED ON DECEMBER 6, WHEN THE MODULE ASSUMED A ONE ABSORBER PUMP STANDBY CAPABILITY UNTIL THE 1A1 ABSORBER PUMP CAN BE REPAIRED.

DURING THE LAST HALF OF THE MONTH, MODUELE A OPERATED WHILE MODULE B WAS BEING REPAIRED.

COMMONWEALTH EDISON: WILL COUNTY 1 (CONT.)

PERIOD	MODULE	AVAILABILITY	OPERABILITY	RELIABILITY	UTILIZATION	% REMOVAL SO2	% REMOVAL PART.	PER HOURS	BOILER HOURS	FGD HOURS	CAP. FACTOR
				PERFORMANCE DATA							
		MODULE B PERFORMED SATISFACTIORILY DURING THE FIRST HALF OF THE MONTH, EXPERIENCING ONLY ONE NO DEMAND OUTAGE. ON THE 17TH, HOWEVER, THE SPENT SLURRY VALVE FAILED AND THE MODULE HAS REMAINED OUT OF SERVICE.									
1/77	A	98.2	98.7		95.8						
	B	13.5	1.1		1.1						
	SYSTEM							744	722		

** PROBLEMS/SOLUTIONS/COMMENTS

THE 1A1 ABSORBER PUMP WENT OUT IN LATE SEPTEMBER WITH BURNED OUT BEARINGS AND REMAINED OUT THROUGH JANUARY WAITING FOR PARTS.

LOW SULFUR COAL WAS BURNED IN THE BOILER FROM NOVEMBER THROUGH JANUARY.

DUE TO THE LOW VOLUME OF SLUDGE PRODUCED WHILE BURNING LOW SULFUR COAL, MUCH OF THE SLUDGE HANDLING TIME WAS SPENT DIGGING OUT THE ACCUMULATED SLUDGE IN THE RECIRCULATION PONDS. THIS MATERIAL, ALONG WITH SCRUBBER WASTE MATERIAL, WAS TREATED WITH LIME AND FLYASH AND HAULED TO AN OFF SITE DISPOSAL AREA.

MODULE A WAS FORCED OUT ONCE BY A FAILED SPENT SLURRY VALVE.

PLUGGED DEMISTER UNDERSPRAYS CAUSED ANOTHER MODULE A OUTAGE.

MODULE A WENT OUT ONCE BECAUSE OF NO DEMAND AND ONCE DUE TO A BOILER OUTAGE (MODULE B WAS ALREADY OUT OF SERVICE FOR REPAIRS).

MODULE B BECAME AVAILABLE FOR SERVICE ON JANUARY 27, AFTER REPAIRS TO THE SPENT SLURRY VALVE WERE COMPLETED. DUE TO SEVERE WEATHER CONDITIONS, THE MODULE WAS PLACED IN THE GAS PATH JANUARY 31.

2/77	A	38.8	42.6		38.8						
	B	72.0	45.7		41.7						
	SYSTEM							672	613		

** PROBLEMS/SOLUTIONS/COMMENTS

THERE WAS VERY LITTLE DIGGING IN THE RECIRCULATION PONDS. CHICAGO FLYASH SPENT MOST OF THEIR TIME ON CLEANING AND MAINTENANCE.

3/77	A	96.9	66.7		64.2						
	B	80.9	75.5		73.9						
	SYSTEM							744	728		

** PROBLEMS/SOLUTIONS/COMMENTS

AN ERT SO2 ANALYZER WAS INSTALLED ON THE DISCHARGE SIDE OF MODULE B I.D. BOOSTER FAN. THIS IS AN "IN SITU" ON-DISPERSIVE ANALYZER THAT CONTINUALLY MEASURES AND READS OUT CONCENTRATIONS OF SO2, CO, CO2, AND NO.

AN ABSORBER SUCTION HEADER LEAK FORCED MODULE B FROM THE GAS PATH.

MODULE B WAS FORCED OUT DUE TO A SLURRY VALVE GASKET LEAK.

A PLUGGED FEED SLURRY RECIRCULATION LINE WAS ENCOUNTERED IN MODULE B.

HIGH SULFUR COAL WAS BURNED FOR SEVEN DAYS THIS MONTH TO PROVIDE HIGH SULFUR SLUDGE FOR THE UOP SLUDGE TEST.

CHICAGO FLYASH SPENT 75% OF THEIR TIME DIGGING IN THE POND. THE REST WAS SPENT ON THE THICKENER AND VACUUM FILTER IPERATION. THE SCRUBBER WASTE MATERIAL WAS TREATED WITH LIME FLYASH AND HAULED OFF SITE. DISPOSAL AREA.

COMMONWEALTH EDISON: WILL COUNTY 1 (CONT.)

PERFORMANCE DATA

PERIOD	MODULE	AVAILABILITY	OPERABILITY	RELIABILITY	UTILIZATION	% REMOVAL SO2	% REMOVAL PART.	PER HOURS	BOILER HOURS	FGD HOURS	CAP. FACTOR
4/77	A	86.1	67.7		61.2						
	B	45.5	30.2		27.3						
	SYSTEM							720	650		

** PROBLEMS/SOLUTIONS/COMMENTS

THE PERFORMANCE OF THE ERT SO2 ANALYZER TO DATE HAS BEEN, AT BEST, UNRELIABLE AND INCONSISTENT. THE ERT TECHNICIANS ARE OUT TO SERVICE THE ANALYZER ALMOST EVERY OTHER DAY. THE PROBLEM, ACCORDING TO ERT TECHNICIANS, IS OF A "THERMAL NATURE". WHEN THE ANALYZER REACHES A CERTAIN TEMPERATURE, A CHIP SHORTS OUT. THEY HAVE NOT BEEN ABLE TO LOCATE THE FAULTY INTEGRATED CIRCUIT YET.

A BOILER TUBE LEAK REPAIR FORCED MODULE A OUT OF THE GAS PATH ONCE THIS MONTH (MODULE B WAS ALREADY DOWN FOR REPAIRS).

MODULE B WAS FORCED OUT OF THE GAS PATH TWICE FOR AN ABSORBER SUCTION HEADER LEAK REPAIR.

MODULE B WAS OUT OF SERVICE ONCE TO WASH THE I. D. BOOSTER FAN.

CHICAGO ADMIXTURES SPENT MOST OF THEIR TIME DIGGING IN THE SMALL POND, GETTING READY FOR THE MGO ADDITION AND FORCED OXIDATION TEST. THE SCRUBBER WASTE MATERIAL WAS TREATED WITH LIME AND FLYASH AND HAULED TO AN OFF SITE DISPOSAL AREA.

PERIOD	MODULE	AVAILABILITY	OPERABILITY	RELIABILITY	UTILIZATION	% REMOVAL SO2	% REMOVAL PART.	PER HOURS	BOILER HOURS	FGD HOURS	CAP. FACTOR
5/77	A	89.4	2.2		2.0						
	B	98.0	50.9		47.3						
	SYSTEM							744	691		

** PROBLEMS/SOLUTIONS/COMMENTS

THE ERT SO2 ANALYZER HAS BEEN REMOVED FROM SERVICE DUE TO A POOR PERFORMANCE RECORD OVER THE LAST THREE MONTHS. ERT IS IN THE PROCESS OF RE-ENGINEERING THEIR ANALYZER.

THE MGO ADDITION TEST WENT WELL. ALTHOUGH THE MGO INCREASED SO2 REMOVAL EFFICIENCY ABOUT 10%, IT DID PRACTICALLY NOTHING FOR THE TWO MORE SERIOUS PROBLEMS, SINCE THICKENER AND SLUDGE PRODUCTION AND LIMESTONE CONSUMPTION RATE WERE ABOUT THE SAME.

MODULE A WAS FORCED OUT OF THE GAS PATH ONCE THIS MONTH WHEN THE INLET VALVE ON 1A2 ABSORBER PUMP FAILED.

MODULE B WAS TAKEN OFF TO CLEAN AND INSPECT THE REHEATER TUBES.

BOTH MODULES WERE FORCED OFF FOR THE FIRST FIFTEEN DAYS OF THE MONTH DUE TO A FAILED 120V CONTROL TRANSFORMER FOR THE POND RETURN PUMPS. THE TRANSFORMER HAD TO BE ORDERED FROM WESTINGHOUSE.

HIGH SULFUR COAL HAS BURNED FOR ELEVEN DAYS DURING THE MONTH.

PERIOD	MODULE	AVAILABILITY	OPERABILITY	RELIABILITY	UTILIZATION	% REMOVAL SO2	% REMOVAL PART.	PER HOURS	BOILER HOURS	FGD HOURS	CAP. FACTOR
6/77	A	31.8	13.3		10.5						
	B	93.2	93.4		73.5						
	SYSTEM							720	566		

** PROBLEMS/SOLUTIONS/COMMENTS

THE 1A1 ABSORBER PUMP IS STILL OUT OF SERVICE WAITING FOR PARTS 1A2 ABSORBER PUMP'S ISOLATION VALVES FORCED MODULE A OFF FOR MOST OF T(E MONTH.

MODULE A HAD ONE NO DEMAND AND ONE BOILER OUTAGE THIS MONTH.

COMMONWEALTH EDISON: WILL COUNTY 1 (CONT.)

PERIOD	MODULE	AVAILABILITY	OPERABILITY	RELIABILITY	UTILIZATION	% REMOVAL SO2	% REMOVAL PART.	PER HOURS	BOILER HOURS	FGD HOURS	CAP. FACTOR
		PERFORMANCE DATA									
		MODULE B WAS ALSO FORCED OFF TO CLEAN THE I.D. BOOSTER FAN.									
		NO HIGH SULFUR COAL WAS BURNED THIS MONTH.									
7/77	B	70.3	41.4		21.0						
	SYSTEM							744	377		
	** PROBLEMS/SOLUTIONS/COMMENTS										
		HIGH SULFUR COAL HAS BURNED FOR EIGHT DAYS THIS MONTH. LIMESTONE OPERATION WAS NORMAL FOR HIGH SULFUR OPERATION.									
		MODULE B WAS FORCED OUT OF THE GAS PATH ONCE TO REMOVE A PLUGGED DIFFUSER. THE FINAL TEST, FORCED OXIDATION SEEMDD TO BE THE MOST SUCCESSFUL OF ALL. USING LIQUID OXYGEN, UP TO 12,000 CFM OF GASEOUS 02 WAS FED INTO EACH VENTURI DOWNCOMER, OXIDATION OF SULFITE TO SULFATE WAS INCREASED FROM 35 TO 90 %									
		MODULE B WAS ALSO FORCED OFF DUE TO A LOW LEVEL IN THE SLURRY STORAGE TANK.									
		MODULE B WAS ALSO FORCED OFF DUE TO REHEATER TUBE BUNDLE LEAKS.									
8/77	A	99.8	99.6		80.8						
	B	9.7	12.0		9.7						
	SYSTEM							744	604		
	** PROBLEMS/SOLUTIONS/COMMENTS										
		MODULE A WAS AVAILABLE THE ENTIRE MONTH WITH JUST THE VENTURI PUMP OPERATING.									
9/77	A	61.0	77.8		54.0						
	B	52.3	75.4		52.3						
	SYSTEM							720	499		
	** PROBLEMS/SOLUTIONS/COMMENTS										
		MODULE B ENCOUNTERED HIGH VIBERATIONS IN ITS BOOSTER FAN DURING THE FIRST WEEK OF THE MONTH. AFTER THE FAN WAS BALANCED, THE MODULE OPERATED INTIL THE UNIT OUTAGE ON SEPTEMBER 21.									
10/77	A	.0			.0						
	B	.0			.0						
	SYSTEM							744	0		
11/77	A	.0			.0						
	B	8.8	50.1		8.8						
	SYSTEM							720	126		
	** PROBLEMS/SOLUTIONS/COMMENTS										
		UNIT ONE CAME UP ON NOVEMBER 25 AFTER A SIXTY-THREE DAY OUTAGE.									
		MODULE B IS IN THE GAS PATH FATER EXPERIENCING SOME DIFICULTY IN BALANCING ITS BOOSTER FAN.									
12/77	A	42.5	42.5	47.8	42.5						
	B	84.1	84.1	94.6	84.1						
	SYSTEM							744	661		

COMMONWEALTH EDISON: WILL COUNTY 1 (CONT.)

PERIOD	MODULE	AVAILABILITY	OPERABILITY	RELIABILITY	UTILIZATION	% REMOVAL SO2	% REMOVAL PART.	PER HOURS	BOILER HOURS	FGD HOURS	CAP. FACTOR
	** PROBLEMS/SOLUTIONS/COMMENTS										
						PLUGGAGE WAS ENCOUNTERED IN THE MODULE B REHEATER. BECAUSE NO SPARE REHEAT COILS WERE AVAILABLE, THE UTILITY TRIED TAKING SOME COILS FROM MODULE A MODULE B APPEARED TO BE MORE ORE SEVERELY PLUGGED THAN ORIGINALLY THOUGHT.					
						MODULE A WAS DOWN HALF THE MONTH BECAUSE OF A MAIN STEAM LEAK WHICH COULD NOT BE ISOLATED.					
						MODULE A OPERATED UNTIL SEPTEMBER 19, WH E A COMBINATION OF MUD AND SCALE BUILD-UP ON THE SUMP FLOOR STRUCTURALLY DAMAGED THE MODULE. REPAIRS PUT THE MODULE OUT OF SERVICE UNTIL MID DECEMBER.					
1/78	A	69.0	89.9		66.3						
	B	22.0	29.8		22.0						
	SYSTEM							744	549		
	** PROBLEMS/SOLUTIONS/COMMENTS										
						ON JANUARY 7, THE MODULE B I.D. BOOSTER FAN DISCHARGE DUCT STARTED VIBRATING WILDLY. THIS FORCED THE BOILER OFF WHILE THE SHOP MADE REPAIRS TO THE DUCTWORK AND BALANCED THE FAN WITH AN I.R.D. MACHINE.					
						WHEN THE UTILITY ATTEMPTED TO PUT MODULE B BACK IN THE GAS PATH, A LEAK IN THE SLURRY LINE FORCED IT BACK OFF.					
						A PLUGGED VENTURI PUMP FORCED MODULE B OFF THE REST OF THE MONTH.					
						DURING THE OUTAGE, THE REHEATER COILS WERE CLEANED WITH A HIGH PRESSURE (5000 LB) SPRAYER.					
						MODULE A WAS FORCED OFF WHEN A STEAM REGULATING VALVE BLEW ITS PACKING.					
						ON THE 23RD, BOTH MODULES WERE TAKEN OFF AND DRAINED TO ALLOW THE SHOP TO INSTALL NEW ISOLATION VALVES IN THE ABSORBER AND VENTURI PUMPS.					
						TOWARD THE END OF THE MONTH, SOME PROBLEMS WERE ENCOUNTERED WITH THE POND RETURN PUMPS FREEZING.					
2/78	A	40.9	56.5		34.4						
	B	69.5	92.9		56.5						
	SYSTEM							672	409		
	** PROBLEMS/SOLUTIONS/COMMENTS										
						MODULE A RAN INTO DIFFICULT OPERATIONG CONDITIONS THIS MONTH DUE TO RAPID PLUGGING OF THE REHEAT COILS.					
						INSPECTION AND SUBSEQUENT CLEANING OF MODULE A UNCOVERED PLUGGED SPRAY NOZZLES AND DEMISTER TRAYS DUE TO NOZZLE INEFFICIENCY.					
						MODULE B OPERATED VERY WELL AND AN INSPECTION SHOWED THE MODULE TO BE VERY CLEAN.					
3/78	A	93.5	100.0	90.6							
	B	83.5	84.7	76.0	26.2						
	SYSTEM							744	230		
	** PROBLEMS/SOLUTIONS/COMMENTS										
						THIS MONTH, DUE TO COAL CONSERVATION, UNIT 1 WAS ON THE SYSTEM VERY LITTLE.					
						MODULE B HAD DIFFICULTY FOR SEVERAL DAYS BECAUSE OF A CRACKED SHEAVE ON THE					

COMMONWEALTH EDISON: WILL COUNTY 1 (CONT.)

PERIOD	MODULE	AVAILABILITY	OPERABILITY	RELIABILITY	UTILIZATION	% REMOVAL SO2	% REMOVAL PART.	PER HOURS	BOILER HOURS	FGD HOURS	CAP. FACTOR

VENTURI PUMP.

HIGH PRESSURE CLEANING ON BOTH MODULES DURING THE COAL CONSERVATION ALONG WITH REMOVING THE VENTURI THROAT RESTRICTOR BLOCKS PROVED BENEFICIAL IN MAINTAINING BETTER CONTROL OF THE DRAFT CONDITIONS IN THE SCRUBBER.

4/78	A	99.9	99.7		92.0						
	B	100.0	99.9		92.2						
	SYSTEM							720		665	

** PROBLEMS/SOLUTIONS/COMMENTS

THE PRESSURE DIFFERENTIAL ACROSS THE VENTURIS HAS BEEN REDUCED BY APPROXIMATELY 40% AT 140 MW BY REMOVING THE VENTURI RESTRICTOR BLOCKS. PARTICULATE REMOVAL AND SOLIDS CARRYOVER COULD BE ADVERSELY AFFECTED BY THIS ACTION. SINCE PARTICULATE REMOVAL AT THE VENTURI IS A FUNCTION OF WATER DROPLET SIZE, WHICH IN TURN IS A FUNCTION OF PRESSURE DROP. INCREASED SOLIDS CARRYOVER COULD POSSIBLY COMPUND REHEATER PLUGGING PROBLEMS. THE UTILITY IS KEEPING A CLOSE WATCH FOR PLUGGING, BUT HAS NOT YET FOUND ANYTHING UNUSUAL.

MODULE A WAS FORCED OUT OF THE GAS PATH ONCE THIS MONTH FOR A VENTURI PIPE LEAK.

5/78	A	9.5	99.4		55.2						
	B	89.2	100.0		56.1						
	SYSTEM							744		413	

** PROBLEMS/SOLUTIONS/COMMENTS

DURING THE LAST PART OF THE MONTH BOTH MODULES WERE FORCED OUT OF THE GAS PATH DUE TO REHEATER LEAKS. IT REQUIRED A TWO DAY OUTAGE TO REMOVE THE LEAKING REHEATER BUNDLES. ADDITIONAL REHATERS ARE ON ORDER AND ARE EXPECTED TO ARRIVE IN JUNE.

6/78	A	87.1	94.5		23.7						
	B	85.6	100.0		25.1						
	SYSTEM							720		181	

** PROBLEMS/SOLUTIONS/COMMENTS

DURING A SCRUBBER INSPECTION, 25% DIEMISTER AND 75% ABSORBER SPRAY PLUGGAGE WAS DISCOVERED IN MODULE A. MODULE B WAS NOT AS BAD.

HIGH VIBRATION WAS ENCOUNTERED IN THE TURBINE BEARINGS DURING BOILER START UP, CAUSING THE BOILER TO SHUT BACK DOWN.

THE PUG MILL FOR CHICAGO ADMIXTURES HAS BEEN APPROVED, AND THE NEW SLUDGE TREATMENT SYSTEM SHOULD BE OPERATING BY FALL.

THE SCRUBBER WAS FORCED OUT OF THE GAS PATH ONCE THIS MONTH WHEN THE 1B1 ABSORBER DISCHARGE VALVE FAILED TO OPEN.

THE BOILER WAS FORCED OFF THE LAST FOUR DAYS OF THE MONTH FOR CYCLONE LEAKS. DURING THIS OUTAGE, THE A AND B MODULE SPENT SLURRY VALVES WERE REPLACED.

7/78	A	97.0	100.0		11.6						
	B	99.2	100.0		11.6						
	SYSTEM							744		77	

COMMONWEALTH EDISON: WILL COUNTY 1 (CONT.)

PERIOD	MODULE	AVAILABILITY	OPERABILITY	RELIABILITY	UTILIZATION	% REMOVAL SO2	% REMOVAL PART.	PER HOURS	BOILER HOURS	FGD HOURS	CAP. FACTOR
				PERFORMANCE DATA							

** PROBLEMS/SOLUTIONS/COMMENTS

THE BOILER WAS PLAGUED ALL MONTH BY CYCLONE CASING LEAKS. BECAUSE OF THE CYCLONE PROBLEMS AND THE COAL CONSERVATION PROGRAM, THE BOILER WAS ONLY OPERATED SEVENTY-SEVEN HOURS FOR THE MONTH.

THE BOILER DOWN TIME WAS USED FOR PREVENTATIVE MAINTENANCE ON THE SCRUBBER. SIX NEW REHEATERS WERE INSTALLED AND A DRAIN VALVE ON THE SPENT SLURRY LINE WAS REPAIRED.

A VALVE FAILURE ON THE 1A1 ABSORBER PUMP FORCED THE SCRUBBER FROM THE GAS PATH ONCE DURING THE MONTH.

MODULE B EXPERIENCED A LEAKING VENTURI HEADER.

8/78	A	97.8	100.0		59.1						
	B	99.6	100.0		59.1						
	SYSTEM							744	440		

** PROBLEMS/SOLUTIONS/COMMENTS

CHICAGO ADMIXTURES SPENT MOST OF THEIR TIME OPERATING OUT OF THE THICKENER. THE SCRUBBER WASTE MATERIAL WAS TREATED WITH LIME AND FLY ASH AND HAULED OFF TO AN OFF SITE DISPOSAL AREA.

REPAIRS TO THE VENTURI EMERGENCY SPRAY VALVE CAUSED ONE BOILER OUTAGE DURING THE MONTH.

A REHEATER FLANGE LEAK WAS RESPONSIBLE FOR FORCING THE UNIT OFF.

MODULE A WAS FORCED OFF ONCE DUE TO HIGH VIBRATION OF THE I.D. BOOSTER FAN. THE PROBLEM WAS CORRECTED BY REPACKING THE COUPLING ON THE FAN.

9/78	A	77.7	95.9		55.4						
	B	77.7	96.0		55.5						
	SYSTEM							720	416		

** PROBLEMS/SOLUTIONS/COMMENTS

CHICAGO ADMIXTURES SPENT MOST OF THEIR TIME OPERATING OUT OF THE THICKENER. THE SCRUBBER WASTE MATERIAL WAS TREATED WITH LIME AND FLY ASH AND HAULED TO AN OFF SITE DISPOSAL AREA.

REHEATER TUBE LEAKS, ONE IN MODULE A AND FOUR IN MODULE B, CAUSED ONE BOILER OUTAGE AND CAUSED THE FGD SYSTEM TO BE UNAVAILABLE FOR A TOTAL OF NINETY HOURS. SAMPLES OF THE TUBES HAVE BEEN SUBMITTED TO O.A.D. FOR METALLURGICAL EXAMINATION.

A RUPTURED AIR LINE ON A VENTURI PUMP ISOLATION VALVE WOULD NOT ALLOW THE E VALVE TO GO COMPLETELY CLOSED.

WHEN THE A VENTURI PUMP WAS STARTED, A VENTURI SPRAY HOSE RUPTURED.

IT WAS DISCOVERED THAT THE MODULE A VENTURI TANK LEVEL PRESSURE SWITCH WAS NOT WORKING PROPERLY.

THE PUGMILL ORDERED FOR CHICAGO ADMIXTURES HAS ARRIVED ON SITE. IN OCTOBER, THEY WILL FINISH THE CONVERSION, WHICH WILL ALLOW THE MATERIAL SERVICE MIXER TRUCKS TO BE ELIMINATED.

IN OCTOBER, THE THICKENER WILL HAVE TO BE BYPASSED WHILE THE UTILITY DOES MAINTENANCE ON THE RAKE AND REPLACES SOME LEAKING VALVES.

COMMONWEALTH EDISON: WILL COUNTY 1 (CONT.)

PERFORMANCE DATA

PERIOD	MODULE	AVAILABILITY	OPERABILITY	RELIABILITY	UTILIZATION	% REMOVAL SO2	% REMOVAL PART.	PER HOURS	BOILER HOURS	FGD HOURS	CAP. FACTOR
10/78	A	100.0	100.0		35.0						
	B	100.0	100.0		35.0						
	SYSTEM							744	261		

** PROBLEMS/SOLUTIONS/COMMENTS

LOW BOILER HOURS WERE DUE TO FOUR OUTAGES CAUSED BY HIGH BEARING METAL TEMPERATURES AND EXCESSIVE VIBRATION IN THE 1-B FORCED DRAFT FAN.

THE BOILER DOWN TIME WAS UTILIZED FOR CLEANING AND REPAIR OF THE VENTURI THROAT, SUMP AND SUMP SCREENS, AND INLET BLOCK DAMPERS OF MODULE A, AS WELL AS THE VENTURI AND ABSORBER TANKS AND SCREENS AND ALL ABSORBER SPRAY NOZZLES OF BOTH MODULES.

ON INSPECTION, IT WAS DISCOVERED THAT THE B MODULE ABSORBER DEPARTMENTAL DAMPER HAD SLIPPED 50% CLOSED. THE DAMPERS WERE JACKED OPEN AND WELDED IN PLACE.

TO CORRECT A HIGH PRESSURE DROP ACROSS THE MODULE B REHEATER, A NEW METHOD WAS EMPLOYED WHEREBY ONLY THE MIDDLE TUBES WERE REMOVED, ALLOWING THE TOP AND BOTTOM TUBES TO BE SEEN AND CLEANED, ELIMINATING THE REMOVAL OF ALL THE TUBES. THIS PROCEDURE CUT OUTAGE TIME FROM ONE OR TWO WEEKS TO TWO DAYS.

11/78	A	96.2	100.0		48.3						
	B	85.2	100.0		48.3						
	SYSTEM							720	348		

** PROBLEMS/SOLUTIONS/COMMENTS

THE UNIT WAS DOWN THREE TIMES THIS MONTH DUE TO A VENTURI PUMP AND TWO BOOSTER FAN OUTAGES.

12/78	A	65.3	100.0		64.5						
	B	64.5	100.0		64.5						
	SYSTEM							744	480		

** PROBLEMS/SOLUTIONS/COMMENTS

REHEATER TUBE LEAKS CAUSED TWO OUTAGES.

THE MODULE B SPENT SLURRY DRAIN WAS REPAIRED.

1/79	A	83.5	100.0		61.3						
	B	62.2	87.1		53.4						
	SYSTEM							744	456		

** PROBLEMS/SOLUTIONS/COMMENTS

THE SO2 PLANT WAS FORCED OFF TWICE THIS MONTH DUE TO REHEATER TUBE LEAKS. TWO TUBES ON MODULE A AND FOUR TUBES ON MODULE B WERE REPLACED.

THE I.D. BOOSTER FAN ON MODULE B WAS FOULED AND HAD TO BE REPLACED.

TWO SPECIAL SECTIONS OF VENTURI PIPING, A SIXTEEN TO EIGHT INCH ECCENTRIC REDUCER AND AN OFFSET TEE WERE PREPARED BY LOCKPORT FABRICATING AND INSTALLED THIS MONTH. THE ORIGINAL REDUCER AND TEE HAD BEEN PATCHED AND WELDED SO MANY TIMES THAT THEY WERE BEYOND REPAIR.

2/79	A	93.0	91.3		54.2						
	B	93.0	91.3		54.2						
	SYSTEM							672	399		

PERIOD	MODULE	AVAILABILITY	OPERABILITY	RELIABILITY	UTILIZATION	% REMOVAL SO2	% REMOVAL PART.	PER HOURS	BOILER HOURS	FGD HOURS	CAP. FACTOR
	** PROBLEMS/SOLUTIONS/COMMENTS										
				THE UNIT WAS FORCED OFF ONCE FOR A MAIN STEAM HEADER LEAK.							
3/79	A	100.0	100.0		46.0						
	B	68.6	100.0		46.0						
	SYSTEM							744	343		
	** PROBLEMS/SOLUTIONS/COMMENTS										
				THE SYSTEM WAS FORCED OUT TWICE IN FEBRUARY AND FOUR TIMES IN MARCH DUE TO A VENTURI HEADER LEAK. A TEN FOOT SECTION OF PIPE WILL HAVE TO BE REPLACED DUE TO EXTENSIVE CORROSION. E							
				THE SYSTEM WAS DOWN ONCE FOR A SPRAY HEADER LEAK.							
				MODULE B EXPERIENCED A LEAK IN THE VENTURI DOWNCOMER. A FIVE FOOT SECTION OF THE PIPE WILL HAVE TO BE REPLACED.							
4/79	A										
	SYSTEM							720			
5/79	A				.0						
	B				.0						
	SYSTEM							744	0		
	** PROBLEMS/SOLUTIONS/COMMENTS										
				UNIT 1 WAS OUT OF SERVICE THE ENTIRE MONTH DUE TO A BOILER OVERHAUL.							
				CHICAGO ADMIXTURES WILL STOCKPILE THE FIXED SLUDGE ON STATION PROPERTY.							
6/79	SYSTEM							720	0		
7/79	SYSTEM							744	0		
8/79	SYSTEM							744	0		
	** PROBLEMS/SOLUTIONS/COMMENTS										
				UNIT 1 WAS OUT OF SERVICE TO REPLACE THE AIR HEATER TUBES, TUBE SHEET AND HOPPERS. DURING THIS OUTAGE, THE WORN VENTURI SPRAY NOZZLES AND DEMISTERS WERE REPLACED. WELDING LEAKS AND GENERAL CLEANING OF THE SO2 INTERNALS WAS ALSO DONE AT THIS TIME.							
				THE BOILER AND THE SCRUBBER ARE SCHEDULED TO RETURN TO SERVICE OCTOBER 1, 1979.							
9/79	SYSTEM							720	0		
10/79	SYSTEM							744	0		
11/79	A	53.3	100.0		85.4						
	B	53.3	100.0		85.4						
	SYSTEM	53.3	100.0		85.4			720	336	336	
	** PROBLEMS/SOLUTIONS/COMMENTS										
				ON NOVEMBER 5, UNIT 1 RETURNED TO SERVICE AFTER A SIX MONTH OUTAGE TO REPLACE THE AIR HEATER TUBES, TUBE SHEET AND HOPPERS.							
				DURING THE OUTAGE, SEVERAL LENGTHS OF VENTURI PIPING HAD TO BE REPLACED WITH NEW RUBBER LINED PIPE.							

COMMONWEALTH EDISON: WILL COUNTY 1 (CONT.)

PERIOD	MODULE	AVAILABILITY	OPERABILITY	RELIABILITY	UTILIZATION	% REMOVAL SO2	% REMOVAL PART.	PER HOURS	BOILER HOURS	FGD HOURS	CAP. FACTOR

THE UNIT DID NOT FORCE THE BOILER OFF AT ANY TIME DURING NOVEMBER.

12/79	A	77.0	99.5		57.5						
	B	84.9	100.0		57.8						
	SYSTEM	77.0	99.5		57.5			744	431		428

** PROBLEMS/SOLUTIONS/COMMENTS

ON DECEMBER 4, UNIT 1 CAME OFF LINE SO THAT THE AIR HEATER HOPPERS AND PRECIPITATOR HOPPERS COULD BE EMPTIED OF CARBON CARRY-OVER AND DEBRIS. DURING THIS OUTAGE THE SHOP REPAIRED A LEAK IN THE POND RETURN LINE.

ON DECEMBER 10, THE A-MODULE DEVELOPED A SERIOUS STEAM LEAK (25,000 MAKE-UP) IN A LOWER REHEAT BUNDLE. THE LEAKING BUNDLE HAD TO BE REMOVED AND REPLACED. THIS RESULTED IN A TWO DAY FORCED OUTAGE. LATER IN THE MONTH THE A-MODULE BLEW ANOTHER REHEATER TUBE FORCING THE BOILER OFF FOR AN ADDITIONAL 25 HOURS AND 12 MINUTES.

THE A-MODULE WAS REMOVED FROM THE GAS PATH ON DECEMBER 29, FOR THREE HOURS TO ALLOW THE MAINTENANCE SHOP TO WELD A LEAKING REHEATER FLANGE.

THE SO2 PLANT FORCED THE BOILER OFF TWICE THIS MONTH. TOTAL FORCED OUTAGE TIME ATTRIBUTED TO THE SCRUBBER WAS 54 HOURS AND 39 MINUTES.

1/80	A	91.0	87.5		63.0						
	B	88.6	84.1		60.6						
	SYSTEM	88.6	84.1		60.6			744	536		451

** PROBLEMS/SOLUTIONS/COMMENTS

THE FIRST SIX DAYS OF JANUARY, UNIT 1 BOILER WAS OFF THE SYSTEM BECAUSE OF A SLAG SCREEN TUBE LEAK. THE UNIT RETURNED TO SERVICE ON JANUARY 7.

ON JANUARY 16, THE UTILITY HAD TO DERATE UNIT 1 TO 50 MW BECAUSE THE RE-HEATER SECTIONS ON A AND B MODULES WERE PLUGGING. ON JANUARY 17, THE MODULES WERE TAKEN OUT OF THE GAS PATH TO BEGIN REMOVING AND CLEANING THE REHEATER SECTIONS WITH A HIGH PRESSURE (4000 PSI) WATER SPRAY. UNIT 1 BOILER WAS LEFT ON TO PROVIDE STABILITY FOR THE 138 KV SYSTEM.

IN THE PAST, ALL 42 BUNDLES CONSISTING OF SEVEN TUBES PER BUNDLE, HAD TO BE TAKEN OUTSIDE TO BE CLEANED ON A CONCRETE SLAB. IN THIS CASE SINCE TIME WAS THE MOST IMPORTANT FACTOR, A DIFFERENT APPROACH WAS USED. ONLY THE MIDDLE SIX BUNDLES ON EACH MODULE WERE REMOVED. THIS PROVIDED A LARGE ENOUGH SPACE SO THAT A LANCE WITH AN EXTENSION ON IT COULD BE USED TO CLEAN THE BOTTOM OF THE TWO TOP BUNDLES AND THE TOP OF THE TWO BOTTOM BUNDLES. THERE ARE DOORS THAT ALLOW EASY ACCESS TO THE TOP AND BOTTOM OF THE REHEATER. USING THIS METHOD, ONLY 12 OR THE 42 BUNDLES WERE REMOVED. IN THE PAST, THIS JOB HAS TAKEN AS LONG AS TWO WEEKS TO COMPLETE. USING THE NEW METHOD, ALL THE REHEATER BUNDLES WERE CLEANED IN 20 HOURS.

THE B-MODULE WAS FORCED OFF LINE ON TWO OTHER OCCASIONS IN JANUARY. BOTH THESE OUTAGES WERE CAUSED BY THE REHEATER (A COIL LEAK AND A FLANGE LEAK) TOTALING 18 HOURS AND 24 MINUTES.

2/80	A	79.7	90.5		79.7						
	B	78.6	89.2		78.6						
	SYSTEM	74.1	84.2		74.1			696	613		516

** PROBLEMS/SOLUTIONS/COMMENTS

SCRUBBER PROBLEMS IN FEBRUARY WERE CAUSED FROM LEAKS IN THE VENTURI SPRAY HEADER. THESE LEAKS DEVELOP WHERE THE RUBBER LINING INSIDE THE VENTURI PIPING HAS WORN AWAY SO THAT THE BARE METAL IS EXPOSED. THIS EXPOSED METAL

PERIOD	MODULE	AVAILABILITY	OPERABILITY	RELIABILITY	UTILIZATION	% REMOVAL SO2	% REMOVAL PART.	PER HOURS	BOILER HOURS	FGD HOURS	CAP. FACTOR

IS THEN SUBJECT TO ERROSION/CORROSION. THE LINING IS MOST LIKELY TO WEAR AT THE WELD HEAD OF THE SPRAY NOZZLE TO THE MAIN HEADER. ALL THE VENTURI SPRAY PIPING IS BEING REPLACED.

TUBE LEAKS IN THE STEAM COIL REHEAT SYSTEM CAUSED SCRUBBER PROBLEMS THIS MONTH. MODULE A WAS FORCED OUT ONCE AND MODULE B WAS FORCED OUT THREE TIMES. THESE TUBES WILL BE REPLACED DURING THE NEXT OUTAGE.

3/80	A	83.9				.0					
	A	83.9				.0					
	SYSTEM	83.9				.0		744	0	0	

** PROBLEMS/SOLUTIONS/COMMENTS

THE BOILER WAS OUT OF SERVICE FOR ALL OF MARCH DUE TO BOILER TUBE LEAKS IN THE REHEAT SECTION OF THE BOILER.

4/80	A	100.0	71.0		17.3						
	B	87.7	71.0		17.3						
	SYSTEM	93.9	71.4		17.3			720	175	125	

** PROBLEMS/SOLUTIONS/COMMENTS

DURING THE FIRST 15 DAYS OF APRIL THE BOILER WAS OUT OF SERVICE DUE TO TUBE LEAKS IN THE AIR PREHEATER.

WHEN ATTEMPTS WERE MADE TO BRING THE BOILER ON LINE ON THE 16 THE B-MODULE OF THE SO2 SYSTEM DEVELOPED REHEATER TUBE LEAKS. THIS CAUSED A FORCED OUTAGE OF 53 HOURS AND 40 MINUTES.

WHEN ATTEMPTS WERE MADE TO RETURN THE BOILER TO SERVICE AGAIN, THE AUXILIARY LOW PRESSURE GOVENOR DEVELOPED AN OIL LEAK CAUSING A FOUR DAY OUTAGE, FOLLOWED BY ANOTHER REHEATER TUBE LEAK OUTAGE ON THE B MODULE. THIS OUTAGE LASTED 35 HOURS. THE UNIT RETURNED TO SERVICE ON APRIL 24 AND WAS AVAILABLE FOR THE REST OF APRIL.

5/80	SYSTEM							744			

** PROBLEMS/SOLUTIONS/COMMENTS

INFORMATION WAS NOT AVAILABLE FOR THE MONTH OF MAY.

6/80	A	86.5	100.0		81.2						
	B	86.5	100.0		81.2						
	SYSTEM	86.5	100.0		81.2			720	584	584	

** PROBLEMS/SOLUTIONS/COMMENTS

THE SCRUBBING SYSTEM FORCED THE BOILER OUT OF SERVICE FROM JUNE 6 TO JUNE 10. THE OUTAGE WAS CAUSED BY PLUGGED REHEATERS ON BOTH MODULES. THIS WAS THE ONLY FORCED OUTAGE EXPERIENCED DURING JUNE.

7/80	A	87.8	78.3		55.0						
	B	87.8	78.3		55.0						
	SYSTEM	87.8	78.3		55.0			744	522	409	

** PROBLEMS/SOLUTIONS/COMMENTS

DURING THE MONTH OF JULY THERE WERE NO FORCED SCRUBBER OUTAGES.

TWO SLAG LINE OUTAGES, ONE FORCED DRAFT FAN AND ONE BOILER SCREEN WALL TUBE OUTAGE OCCURRED. THIS ACCOUNTED FOR 193 HOURS OF BOILER-RELATED OUTAGE TIME DURING THE MONTH.

COMMONWEALTH EDISON: WILL COUNTY 1 (CONT.)

PERIOD	MODULE	AVAILABILITY	OPERABILITY	RELIABILITY	UTILIZATION	% REMOVAL SO2	% REMOVAL PART.	PER HOURS	BOILER HOURS	FGD HOURS	CAP. FACTOR
				PERFORMANCE DATA							
			ON NINE OCCASIONS IN JULY THE SCRUBBER WAS BY-PASSED SO THAT THE BOILER COULD CARRY MAXIMUM LOAD (163 MW). THE UNIT WAS LIMITED TO 135 MW AFTER A RECENT STACK EMISSION TEST.								
8/80	SYSTEM							744			
9/80	SYSTEM							720			
	** PROBLEMS/SOLUTIONS/COMMENTS										
			NO INFORMATION WAS AVAILABLE FOR THE MONTHS OF AUGUST AND SEPTEMBER.								
10/80	A	69.9	100.0		60.9						
	B	69.9	100.0		60.9						
	SYSTEM	69.9	100.0		60.9			744	453	453	
	** PROBLEMS/SOLUTIONS/COMMENTS										
			DURING OCTOBER THERE WAS ONE FORCED OUTAGE DUE TO PROBLEMS WITH THE ABSORBER RECIRCULATION PUMP ON MODULE B. DURING THIS OUTAGE THE WALL WASH HEADERS WERE REPLACED ON BOTH MODULES.								
			DURING OCTOBER THE BOILER WAS SHUT DOWN TWICE DUE TO A LACK OF DEMAND. THIS ACCOUNTED FOR APPROXIMATELY 51 HOURS OF DOWN TIME. ADDITIONAL UNIT OUTAGE TIME WAS DUE TO INTERCEPT VALVE AND AIR HEATER PROBLEMS.								
11/80	A	92.4	100.0	83.4	33.0						
	B	92.4	100.0	83.4	33.0						
	SYSTEM	92.4	100.0	83.4	33.0			720	238	238	
	** PROBLEMS/SOLUTIONS/COMMENTS										
			THE UTILITY REPORTED THAT NO MAJOR PROBLEMS WITH THE SCRUBBING SYSTEM WERE ENCOUNTERED DURING NOVEMBER.								
12/80	A	77.9	100.0	31.5	31.5						
	B	77.9	100.0	31.5	31.5						
	SYSTEM	77.9	100.0	31.5	31.5			744	234	234	20.3
	** PROBLEMS/SOLUTIONS/COMMENTS										
			DURING DECEMBER AVAILABILITY OF THE FGD SYSTEM WAS LOW DUE TO PLUGGED VENTURI NOZZLES AND HEADER, WHICH HAD TO BE HIGH-PRESSURE JETTED.								
1/81	A	82.4	100.0	80.8	80.8						
	B	82.4	100.0	80.8	80.8						
	SYSTEM	82.4	100.0	80.8	80.8			744	601	601	
	** PROBLEMS/SOLUTIONS/COMMENTS										
			DURING JANUARY THE MIST ELIMINATOR TRAY WAS REPLACED ON MODULE A.								
2/81	A	75.4	100.0	68.9	68.9						
	B	75.4	100.0	68.9	68.9						
	SYSTEM	75.4	100.0	68.9	68.9			672	463	463	59.3
	** PROBLEMS/SOLUTIONS/COMMENTS										
			DURING FEBRUARY THE BOILER WAS OUT OF SERVICE APPROXIMATELY 209 HOURS DUE TO TUBE LEAKS.								
			THE SCRUBBING SYSTEM WAS OUT OF SERVICE 164 HOURS DUE TO CLEANING AND A TWO HOUR INSPECTION.								

COMMONWEALTH EDISON: WILL COUNTY 1 (CONT.)

PERFORMANCE DATA

PERIOD	MODULE	AVAILABILITY	OPERABILITY	RELIABILITY	UTILIZATION	% REMOVAL SO2	% REMOVAL PART.	PER HOURS	BOILER HOURS	FGD HOURS	CAP. FACTOR
3/81	A	70.2	100.0	68.2	68.2						
	B	70.2	100.0	68.2	68.2						
	SYSTEM	70.2	100.0	68.2	68.2			744	507	507	63.1

** PROBLEMS/SOLUTIONS/COMMENTS

DURING MARCH DOWNTIME OCCURRED DUE TO MISCELLANEOUS CLEANING TO THE BOILER AND THE SCRUBBER.

4/81	A	32.9	100.0	32.9	32.9						
	B	32.9	100.0	32.9	32.9						
	SYSTEM	32.9	100.0	32.9	32.9			720	237	237	30.1

** PROBLEMS/SOLUTIONS/COMMENTS

DURING MAY THE SCRUBBING MODULES AND THE SCRUBBER PIPING WERE CLEANED. THIS ACCOUNTED FOR THE OUTAGE TIME DURING THE MONTH.

5/81	A	59.1	100.0	51.0	48.1						
	B	59.1	100.0	51.0	48.1						
	SYSTEM	59.1	100.0	51.0	48.1			744	358	358	42.7

** PROBLEMS/SOLUTIONS/COMMENTS

DURING MAY THE BOILER WAS DOWN FOR 11 DAYS FOR A SCHEDULED OUTAGE.

IN MAY 41 HOURS OF OUTAGE TIME WAS DUE TO A LACK OF DEMAND.

LEAKS IN THE CYCLONE TUBES CAUSED THE SYSTEM TO SHUT DOWN FOR 53 HOURS.

TOWARD THE END OF MAY, THE SYSTEM WAS SHUTDOWN FOR 30 HOURS TO PREPARE FOR AN EMISSION TEST.

6/81	A	100.0	100.0	100.0	63.7						
	B	100.0	100.0	100.0	63.7						
	SYSTEM	100.0	100.0	100.0	63.7			720	458	458	49.4

** PROBLEMS/SOLUTIONS/COMMENTS

DURING JUNE NO MAJOR PROBLEMS WERE ENCOUNTERED.

APPENDIX D
DESIGN AND PERFORMANCE DATA FOR OPERATIONAL PARTICLE SCRUBBERS

COMPANY NAME	MINNESOTA POWER & LIGHT	
PLANT NAME	CLAY BOSWELL	
UNIT NUMBER	3	
CITY	COHASSET	
STATE	MINNESOTA	
REGULATORY CLASSIFICATION	E	
PARTICULATE EMISSION LIMITATION - NG/J	258.	(.600 LB/MMBTU)
SO2 EMISSION LIMITATION - NG/J	1720.	(4.000 LB/MMBTU)
NOX EMISSION LIMITATION - NG/J	******	(****** LB/MMBTU)
NET PLANT GENERATING CAPACITY - MW	1000	
GROSS UNIT GENERATING CAPACITY - MW	364	
NET UNIT GENERATING CAPACITY W/FGD - MW	347	
NET UNIT GENERATING CAPACITY WO/FGD - MW	350	
EQUIVALENT SCRUBBED CAPACITY - MW	350	
** UNIT DATA - BOILER AND STACK		
BOILER SUPPLIER	COMBUSTION ENGINEERING	
BOILER TYPE	PULVERIZED COAL	
BOILER SERVICE LOAD	BASE	
DESIGN BOILER FLUE GAS FLOW - CU.M/S	613.47	(1300000 ACFM)
BOILER FLUE GAS TEMPERATURE - C	123.3	(254 F)
STACK HEIGHT - M	213.	(700 FT)
STACK SHELL	CONCRETE	
STACK TOP DIAMETER - M	7.9	(26.0 FT)
** FUEL DATA		
FUEL TYPE	COAL	
FUEL GRADE	SUBBITUMINOUS	
AVERAGE HEAT CONTENT - J/G	19538.	(8400 BTU/LB)
RANGE HEAT CONTENT - BTU/LB		7500-9900
AVERAGE ASH CONTENT - %	9.00	
RANGE ASH CONTENT - %	4.8-16.0	
AVERAGE MOISTURE CONTENT - %	26.00	
RANGE MOISTURE CONTENT - %	24.0-28.0	
AVERAGE SULFUR CONTENT - %	.92	
RANGE SULFUR CONTENT - %	0.5-1.5	
AVERAGE CHLORIDE CONTENT - %	.01	
RANGE CHLORIDE CONTENT - %	0.00-0.07	
*** PARTICLE CONTROL		
** MECHANICAL COLLECTOR		
NUMBER	0	
TYPE	NONE	
** FABRIC FILTER		
NUMBER	0	
TYPE	NONE	
** ESP		
NUMBER	0	
TYPE	NONE	
** PARTICLE SCRUBBER		
NUMBER	1	
INITIAL START-UP DATE	5/73	
GENERIC TYPE	IMPINGEMENT TOWER	
SPECIFIC TYPE	NR	
TRADE NAME/COMMON NAME	NR	
SUPPLIER	KREBS ENGINEERS	
DIMENSIONS - FT	18.0 X 126.0 X 52.0	
SHELL GENERIC MATERIAL	STAINLESS STEEL	
SHELL SPECIFIC MATERIAL	AUSTENITIC	
LINER GENERIC MATERIAL	NONE	
LINER SPECIFIC MATERIAL	N/A	
GAS CONTACTING DEVICE TYPE	NONE	
NUMBER OF CONTACTING ZONES	1	
LIQUID RECIRCULATION RATE - LITER/S	714.4	(11340 GPM)
L/G RATIO - LITER/CU.M	1.1	(8.3 GAL/1000ACF)

MINNESOTA POWER & LIGHT: CLAY BOSWELL 3 (CONT.)

PH CONTROL ADDITIVE	ALKALINE FLYASH	
PRESSURE DROP - KPA	1.0	(4.0 IN-H2O)
SUPERFICIAL GAS VELOCITY - M/S	2.4	(8.0 FT/S)
INLET GAS FLOW RATE - CU.M/S	613.5	(1300000 ACFM)
INLET GAS TEMPERATURE - C	123.3	(254 F)
SO2 REMOVAL EFFICENCY - %	.0	
PARTICLE REMOVAL EFFICIENCY - %	98.7	
ENERGY CONSUMPTION - %	.8	

PERFORMANCE DATA

PERIOD	MODULE	AVAILABILITY	OPERABILITY	RELIABILITY	UTILIZATION	% REMOVAL SO2	% REMOVAL PART.	PER HOURS	BOILER HOURS	FGD HOURS	CAP. FACTOR
5/73	SYSTEM										

** PROBLEMS/SOLUTIONS/COMMENTS

SINCE STARTUP IN MAY 1973 SCALING AND PLUGGING HAVE OCCURRED IN NOZZLES, NOZZLE TREES, STRAINERS, ON PUNCH PLATE BAFFLES, IN THE WET/DRY ZONE, AND ON THE FAN AND THE MIST ELIMINATOR. PLUGGING HAS ALSO RESULTED AS DEPOSITS HAVE FALLEN INTO THE DRAINS AT THE BOTTOM OF THE SCRUBBER. DUE TO THE CALCIUM-RICH ASH, CHARACTERISTIC OF THE WESTERN COAL BURNED, THE SCALING IS AGGRAVATED. THE UTILITY HAS CONTROLLED SCALE BY BLOWDOWN OF THE SCRUBBING SYSTEM. THIS HAS MAINTAINED THE PROCESS CHEMISTRY BELOW SATURATION WITH RESPECT TO CALCIUM SULFITE. A VERY HIGH LEVEL OF MAINTENANCE HAS BEEN MAINTAINED ALSO TO MINIMIZE SCALE ACCUMULATION AND PLUGGING, THIS HAS INCLUDED WASHING OF THE WET FAN WHICH HAS RESULTED IN A STACK MIST PROBLEM. THE USE OF SOOT BLOWERS IN PLACE OF WASHING WAS ATTEMPTED BUT WAS UNSUCCESSFUL. THE UTILITY HAS REDUCED THE AMOUNT OF WASHING AND HAS CONSIDERED THE INSTALLATION OF REHEAT OR CONSTRUCTION OF A NEW LOW-VELOCITY STACK.

10/79	SYSTEM							744			
11/79	SYSTEM							720			
12/79	SYSTEM							744			

** PROBLEMS/SOLUTIONS/COMMENTS

NO INFORMATION WAS AVAILABLE FOR THE FOURTH QUARTER 1979.

1/80	SYSTEM							744			
2/80	SYSTEM							696			
3/80	SYSTEM							744			

** PROBLEMS/SOLUTIONS/COMMENTS

THE UTILITY REPORTED THAT THE SCRUBBER EXPERIENCED NO PROBLEMS DURING THE 1ST QUARTER OF 1980.

4/80	SYSTEM							720			
5/80	SYSTEM							744			
6/80	SYSTEM							720			

** PROBLEMS/SOLUTIONS/COMMENTS

THE UTILITY REPORTED THAT NO SCRUBBER-RELATED OUTAGES OCCURRED DURING THE SECOND QUARTER OF 1980. DOWN TIME FOR MAINTENANCE WAS NOT REQUIRED SINCE GENERAL MAINTENANCE CAN BE PERFORMED ON THE MINNESOTA POWER AND LIGHT PARTICLE SCRUBBERS WHILE THEY ARE IN SERVICE.

7/80	SYSTEM		100.0	100.0	90.3			720	650	650	60.2
8/80	SYSTEM		100.0	100.0	78.0			744	580	580	52.3

MINNESOTA POWER & LIGHT: CLAY BOSWELL 3 (CONT.)

PERIOD	MODULE	AVAILABILITY	OPERABILITY	RELIABILITY	UTILIZATION	% REMOVAL SO2	% REMOVAL PART.	PER HOURS	BOILER HOURS	FGD HOURS	CAP. FACTOR
		PERFORMANCE DATA									
9/80	SYSTEM		100.0	100.0	84.0			744	625	625	54.8
	** PROBLEMS/SOLUTIONS/COMMENTS										
	NO OPERATIONAL PROBLEMS WERE REPORTED FOR THE JULY THROUGH SEPTEMBER PERIOD.										
10/80	SYSTEM	100.0	100.0	100.0	85.9			744	639	639	62.3
11/80	SYSTEM	100.0	100.0	100.0	81.5			720	587	587	64.6
12/80	SYSTEM	100.0	100.0	100.0	81.6			744	607	607	60.9
	** PROBLEMS/SOLUTIONS/COMMENTS										
	THE UTILITY REPORTED THAT NO SCRUBBER PROBLEMS WERE ENCOUNTERED DURING THE FOURTH QUARTER 1980.										
1/81	SYSTEM	100.0	100.0	100.0	94.3			744	702	702	69.1
2/81	SYSTEM	100.0	100.0	100.0	97.0			672	651	651	73.2
3/81	SYSTEM	100.0	100.0	100.0	79.0			744	585	585	65.1
	** PROBLEMS/SOLUTIONS/COMMENTS										
	THE UTILITY REPORTED THAT NO SCRUBBER-RELATED PROBLEMS WERE ENCOUNTERED DURING THE FIRST QUARTER 1981.										
	DURING MARCH THE BOILER WAS OUT OF SERVICE APPROXIMATELY 159 HOURS TO REPAIR STEAM LEAKS AND TO PERFORM MAINTENANCE.										
4/81	SYSTEM	100.0	100.0	100.0	62.1			720	447	447	50.9
5/81	SYSTEM	100.0	100.0	100.0	95.3			744	709	709	79.3
6/81	SYSTEM	100.0	100.0	100.0	96.7			720	696	696	75.7
	** PROBLEMS/SOLUTIONS/COMMENTS										
	THE UTILITY REPORTED THAT NO MAJOR PROBLEMS WERE ENCOUNTERED DURING THE SECOND QUARTER 1981.										

APPENDIX D
DESIGN AND PERFORMANCE DATA FOR OPERATIONAL PARTICLE SCRUBBERS

COMPANY NAME	MINNESOTA POWER & LIGHT	
PLANT NAME	SYL LASKIN	
UNIT NUMBER	1	
CITY	AURORA	
STATE	MINNESOTA	
REGULATORY CLASSIFICATION	E	
PARTICULATE EMISSION LIMITATION - NG/J	258.	(.600 LB/MMBTU)
SO2 EMISSION LIMITATION - NG/J	1720.	(4.000 LB/MMBTU)
NOX EMISSION LIMITATION - NG/J	******	(****** LB/MMBTU)
NET PLANT GENERATING CAPACITY - MW	116	
GROSS UNIT GENERATING CAPACITY - MW	62	
NET UNIT GENERATING CAPACITY W/FGD - MW	57	
NET UNIT GENERATING CAPACITY WO/FGD - MW	58	
EQUIVALENT SCRUBBED CAPACITY - MW	58	
** UNIT DATA - BOILER AND STACK		
BOILER SUPPLIER	COMBUSTION ENGINEERING	
BOILER TYPE	PULVERIZED COAL	
BOILER SERVICE LOAD	INTERMEDIATE	
DESIGN BOILER FLUE GAS FLOW - CU.M/S	141.57	(300000 ACFM)
BOILER FLUE GAS TEMPERATURE - C	171.1	(340 F)
STACK HEIGHT - M	91.	(300 FT)
STACK SHELL	CONCRETE	
STACK TOP DIAMETER - M	3.2	(10.5 FT)
** FUEL DATA		
FUEL TYPE	COAL	
FUEL GRADE	SUBBITUMINOUS	
AVERAGE HEAT CONTENT - J/G	20469.	(8800 BTU/LB)
RANGE HEAT CONTENT - BTU/LB		7509-9923
AVERAGE ASH CONTENT - %	9.00	
RANGE ASH CONTENT - %	4.8-16.0	
AVERAGE MOISTURE CONTENT - %	26.70	
RANGE MOISTURE CONTENT - %	24.0-28.0	
AVERAGE SULFUR CONTENT - %	1.00	
RANGE SULFUR CONTENT - %	0.5-1.5	
AVERAGE CHLORIDE CONTENT - %	.01	
RANGE CHLORIDE CONTENT - %	0.00-0.07	
*** PARTICLE CONTROL		
** MECHANICAL COLLECTOR		
NUMBER	0	
TYPE	NONE	
** FABRIC FILTER		
NUMBER	0	
TYPE	NONE	
** ESP		
NUMBER	0	
TYPE	NONE	
** PARTICLE SCRUBBER		
NUMBER	1	
INITIAL START-UP DATE	6/71	
GENERIC TYPE	IMPINGEMENT TOWER	
SPECIFIC TYPE	NR	
TRADE NAME/COMMON NAME	NR	
SUPPLIER	KREBS ENGINEERS	
DIMENSIONS - FT	34.0 X 18.0 X 23.0	
SHELL GENERIC MATERIAL	STAINLESS STEEL	
SHELL SPECIFIC MATERIAL	AUSTENITIC	
LINER GENERIC MATERIAL	NONE	
LINER SPECIFIC MATERIAL	N/A	
GAS CONTACTING DEVICE TYPE	NONE	
NUMBER OF CONTACTING ZONES	1	
LIQUID RECIRCULATION RATE - LITER/S	151.2	(2400 GPM)
L/G RATIO - LITER/CU.M	1.1	(8.3 GAL/1000ACF)

MINNESOTA POWER & LIGHT: SYL LASKIN 1 (CONT.)

PH CONTROL ADDITIVE	ALKALINE FLYASH	
PRESSURE DROP - KPA	.6	(2.5 IN-H2O)
SUPERFICIAL GAS VELOCITY - M/S	2.1	(7.0 FT/S)
INLET GAS FLOW RATE - CU.M/S	137.4	(291160 ACFM)
INLET GAS TEMPERATURE - C	171.1	(340 F)
SO2 REMOVAL EFFICENCY - %	.0	
PARTICLE REMOVAL EFFICIENCY - %	97.8	
ENERGY CONSUMPTION - %	1.6	

PERFORMANCE DATA

PERIOD	MODULE	AVAILABILITY	OPERABILITY	RELIABILITY	UTILIZATION	% REMOVAL SO2	% REMOVAL PART.	PER HOURS	BOILER HOURS	FGD HOURS	CAP. FACTOR
6/71	SYSTEM										

** PROBLEMS/SOLUTIONS/COMMENTS

SINCE STARTUP IN JUNE 1971 SCALING AND PLUGGING HAVE OCCURRED IN NOZZLES, NOZZLE TREES, STRAINERS, ON PUNCH PLATE BAFFLES, IN THE WET/DRY ZONE, AND ON THE FAN AND THE MIST ELIMINATOR. PLUGGING HAS ALSO RESULTED AS DEPOSITS HAVE FALLEN INTO THE DRAINS AT THE BOTTOM OF THE SCRUBBER. DUE TO THE CALCIUM-RICH ASH, CHARACTERISTIC OF THE WESTERN COAL BURNED, THE SCALING IS AGGRAVATED. THE UTILITY HAS CONTROLLED SCALE BY BLOWDOWN OF THE SCRUBBING SYSTEM. THIS HAS MAINTAINED THE PROCESS CHEMISTRY BELOW SATURATION WITH RESPECT TO CALCIUM SULFITE. A VERY HIGH LEVEL OF MAINTENANCE HAS BEEN MAINTAINED ALSO TO MINIMIZE SCALE ACCUMULATION AND PLUGGING, THIS HAS INCLUDED WASHING OF THE WET FAN WHICH HAS RESULTED IN A STACK MIST PROBLEM. THE USE OF SOOT BLOWERS IN PLACE OF WASHING WAS ATTEMPTED BUT WAS UNSUCCESSFUL. THE UTILITY HAS REDUCED THE AMOUNT OF WASHING AND HAS CONSIDERED THE INSTALLATION OF REHEAT OR CONSTRUCTION OF A NEW LOW-VELOCITY STACK.
THE PROBLEMS AT SYL LASKIN ARE NOT AS SEVERE AS THE PROBLEMS AT CLAY BOSWELL DUE TO THE FACT THAT THE RECYCLE LOOP IS NOT CLOSED TO THE SAME EXTENT. THE MIST CARRYOVER PROBLEM IS LESS SEVERE OWING TO OPERATION OF THE UNIT AT PARTIAL LOAD RESULTING IN A LOWER STACK VELOCITY.

10/79	SYSTEM							744			
11/79	SYSTEM							720			
12/79	SYSTEM							744			

** PROBLEMS/SOLUTIONS/COMMENTS

NO INFORMATION WAS AVAILABLE FOR THE FOURTH QUARTER 1979.

1/80	SYSTEM							744			
2/80	SYSTEM							696			
3/80	SYSTEM							744			

** PROBLEMS/SOLUTIONS/COMMENTS

THE UTILITY REPORTED THAT THE SCRUBBER EXPERIENCED NO PROBLEMS DURING THE 1ST QUARTER OF 1980.

4/80	SYSTEM							720			
5/80	SYSTEM							744			
6/80	SYSTEM							720			

** PROBLEMS/SOLUTIONS/COMMENTS

THE UTILITY REPORTED THAT NO SCRUBBER-RELATED OUTAGES OCCURRED DURING THE SECOND QUARTER OF 1980. DOWN TIME FOR MAINTENANCE WAS NOT REQUIRED SINCE GENERAL MAINTENANCE CAN BE PERFORMED ON THE MINNESOTA POWER AND LIGHT PAR-

MINNESOTA POWER & LIGHT: SYL LASKIN 1 (CONT.)

PERIOD	MODULE	PERFORMANCE DATA AVAILABILITY	OPERABILITY	RELIABILITY	UTILIZATION	% REMOVAL SO2	% REMOVAL PART.	PER HOURS	BOILER HOURS	FGD HOURS	CAP. FACTOR
		TICLE SCRUBBERS WHILE THEY ARE IN SERVICE.									
7/80	SYSTEM	100.0	100.0	100.0	56.6			744	421	421	25.2
8/80	SYSTEM	100.0	100.0	100.0	19.0			744	140	140	12.0
	** PROBLEMS/SOLUTIONS/COMMENTS										
		THE UTILITY REPORTED THAT NO BOILER OR FGD-RELATED PROBLEMS WERE ENCOUNTERED DURING JULY AND AUGUST. LOW UTILIZATION FACTORS WERE DUE TO A LACK OF POWER DEMAND.									
9/80	SYSTEM	100.0	100.0	100.0	4.4			720	33	33	1.9
	** PROBLEMS/SOLUTIONS/COMMENTS										
		NO SCRUBBER OUTAGES OCCURRED DURING SEPTEMBER. THE LOW UTILIZATION FACTOR WAS AGAIN THE RESULT OF A LACK OF DEMAND FOR POWER.									
10/80	SYSTEM	100.0			.0			744	0	744	.0
11/80	SYSTEM	100.0	100.0	100.0	24.3			720	175	175	10.2
12/80	SYSTEM	100.0	100.0	100.0	64.1			744	477	477	23.4
	** PROBLEMS/SOLUTIONS/COMMENTS										
		THE UTILITY REPORTED THAT NO SCRUBBER-RELATED PROBLEMS OCCURRED DURING THE FOURTH QUARTER 1980. LOW UTILIZATION FACTORS WERE CAUSED BY A LACK OF POWER DEMAND.									
1/81	SYSTEM	78.5	100.0	100.0	78.5			744	524	524	23.8
	** PROBLEMS/SOLUTIONS/COMMENTS										
		DURING JANUARY THE BOILER WAS OUT OF SERVICE APPROXIMATELY 160 HOURS DUE TO A TURBINE STEAM LEAK. THE BOILER WAS OUT OF SERVICE AN ADDITIONAL 60 HOURS DUE TO A LACK OF POWER DEMAND.									
2/81	SYSTEM	5.4	100.0	100.0	5.4			672	36	36	17.4
	** PROBLEMS/SOLUTIONS/COMMENTS										
		DURING FEBRUARY THE BOILER REMAINED OFF LINE FOR APPROXIMATELY 708 HOURS TO REPAIR A TURBINE STEAM LEAK.									
3/81	SYSTEM	99.1	100.0	100.0	79.0			744	588	588	44.8
	** PROBLEMS/SOLUTIONS/COMMENTS										
		DURING MARCH THE BOILER WAS OUT OF SERVICE SEVEN HOURS TO CLEAN THE ID FANS AND 77 HOURS DUE TO A LACK OF DEMAND.									
4/81	SYSTEM	100.0	100.0	100.0	100.0			720	720	720	46.0
	** PROBLEMS/SOLUTIONS/COMMENTS										
		DURING APRIL 10 HOURS OF OUTAGE TIME WAS NECESSARY TO WORK ON THE EXCITER.									
5/81	SYSTEM	64.1	100.0	100.0	64.0			744	476	476	31.3

MINNESOTA POWER & LIGHT: SYL LASKIN 1 (CONT.)

PERIOD	MODULE	AVAILABILITY	OPERABILITY	RELIABILITY	UTILIZATION	% REMOVAL SO2	% REMOVAL PART.	PER HOURS	BOILER HOURS	FGD HOURS	CAP. FACTOR
	** PROBLEMS/SOLUTIONS/COMMENTS										
					DURING MAY THE UNIT WAS OUT OF SERVICE 209 HOURS FOR AN OVERHAUL.						
					SYSTEM DOWN TIME WAS NEEDED TO REPAIR A STEAM DRIVEN OIL PUMP.						
					FOLLOWING A TEST THE SYSTEM WAS TAKEN OFF-LINE FOR SANDBLASTING ID FANS.						
6/81	SYSTEM	100.0			.0			720	0	0	
	** PROBLEMS/SOLUTIONS/COMMENTS										
					IN JUNE THE UNIT WAS DOWN DUE TO A LACK OF DEMAND. DURING THIS PERIOD GENERAL MAINTENANCE WAS PERFORMED.						

APPENDIX D
DESIGN AND PERFORMANCE DATA FOR OPERATIONAL PARTICLE SCRUBBERS

COMPANY NAME	MINNESOTA POWER & LIGHT	
PLANT NAME	SYL LASKIN	
UNIT NUMBER	2	
CITY	AURORA	
STATE	MINNESOTA	
REGULATORY CLASSIFICATION	E	
PARTICULATE EMISSION LIMITATION - NG/J	258.	(.600 LB/MMBTU)
SO2 EMISSION LIMITATION - NG/J	1720.	(4.000 LB/MMBTU)
NOX EMISSION LIMITATION - NG/J	******	(****** LB/MMBTU)
NET PLANT GENERATING CAPACITY - MW	116	
GROSS UNIT GENERATING CAPACITY - MW	62	
NET UNIT GENERATING CAPACITY W/FGD - MW	57	
NET UNIT GENERATING CAPACITY WO/FGD - MW	58	
EQUIVALENT SCRUBBED CAPACITY - MW	58	
** UNIT DATA - BOILER AND STACK		
BOILER SUPPLIER	COMBUSTION ENGINEERING	
BOILER TYPE	PULVERIZED COAL	
BOILER SERVICE LOAD	INTERMEDIATE	
DESIGN BOILER FLUE GAS FLOW - CU.M/S	141.57	(300000 ACFM)
BOILER FLUE GAS TEMPERATURE - C	171.1	(340 F)
STACK HEIGHT - M	91.	(300 FT)
STACK SHELL	CONCRETE	
STACK TOP DIAMETER - M	3.2	(10.5 FT)
** FUEL DATA		
FUEL TYPE	COAL	
FUEL GRADE	SUBBITUMINOUS	
AVERAGE HEAT CONTENT - J/G	20469.	(8800 BTU/LB)
RANGE HEAT CONTENT - BTU/LB	7509-9923	
AVERAGE ASH CONTENT - %	9.00	
RANGE ASH CONTENT - %	4.8-16.0	
AVERAGE MOISTURE CONTENT - %	26.70	
RANGE MOISTURE CONTENT - %	24.0-28.0	
AVERAGE SULFUR CONTENT - %	1.00	
RANGE SULFUR CONTENT - %	0.5-1.5	
AVERAGE CHLORIDE CONTENT - %	.01	
RANGE CHLORIDE CONTENT - %	0.00-0.07	
*** PARTICLE CONTROL		
** MECHANICAL COLLECTOR		
NUMBER	0	
TYPE	NONE	
** FABRIC FILTER		
NUMBER	0	
TYPE	NONE	
** ESP		
NUMBER	0	
TYPE	NONE	
** PARTICLE SCRUBBER		
NUMBER	1	
INITIAL START-UP DATE	6/71	
GENERIC TYPE	IMPINGEMENT TOWER	
SPECIFIC TYPE	NR	
TRADE NAME/COMMON NAME	NR	
SUPPLIER	KREBS ENGINEERS	
DIMENSIONS - FT	34.0 X 18.0 X 23.0	
SHELL GENERIC MATERIAL	STAINLESS STEEL	
SHELL SPECIFIC MATERIAL	AUSTENITIC	
LINER GENERIC MATERIAL	NONE	
LINER SPECIFIC MATERIAL	N/A	
GAS CONTACTING DEVICE TYPE	NONE	
NUMBER OF CONTACTING ZONES	1	
LIQUID RECIRCULATION RATE - LITER/S	151.2	(2400 GPM)
L/G RATIO - LITER/CU.M	1.1	(8.3 GAL/1000ACF)

MINNESOTA POWER & LIGHT: SYL LASKIN 2 (CONT.)

PH CONTROL ADDITIVE	ALKALINE FLYASH	
PRESSURE DROP - KPA	.6	(2.5 IN-H2O)
SUPERFICIAL GAS VELOCITY - M/S	2.1	(7.0 FT/S)
INLET GAS FLOW RATE - CU.M/S	137.4	(291160 ACFM)
INLET GAS TEMPERATURE - C	171.1	(340 F)
SO2 REMOVAL EFFICENCY - %	.0	
PARTICLE REMOVAL EFFICIENCY - %	97.8	
ENERGY CONSUMPTION - %	1.6	

PERFORMANCE DATA

PERIOD	MODULE	AVAILABILITY	OPERABILITY	RELIABILITY	UTILIZATION	% REMOVAL SO2	% REMOVAL PART.	PER HOURS	BOILER HOURS	FGD HOURS	CAP. FACTOR
6/71	SYSTEM										

** PROBLEMS/SOLUTIONS/COMMENTS

SINCE STARTUP IN JUNE 1971 SCALING AND PLUGGING HAVE OCCURRED IN NOZZLES, NOZZLE TREES, STRAINERS, ON PUNCH PLATE BAFFLES, IN THE WET/DRY ZONE AND ON THE FAN AND THE MIST ELIMINATOR. PLUGGING HAS ALSO RESULTED AS DEPOSITS HAVE FALLEN INTO THE DRAINS AT THE BOTTOM OF THE SCRUBBER. DUE TO THE CALCIUM-RICH ASH, CHARACTERISTIC OF THE WESTERN COAL BURNED, THE SCALING IS AGGRAVATED. THE UTILITY HAS CONTROLLED SCALE BY BLOWDOWN OF THE SCRUBBING SYSTEM. THIS HAS MAINTAINED THE PROCESS CHEMISTRY BELOW SATURATION WITH RESPECT TO CALCIUM SULFITE. A VERY HIGH LEVEL OF MAINTENANCE HAS BEEN MAINTAINED ALSO TO MINIMIZE SCALE ACCUMULATION AND PLUGGING, THIS HAS INCLUDED WASHING OF THE WET FAN WHICH HAS RESULTED IN A STACK MIST PROBLEM. THE USE OF SOOT BLOWERS IN PLACE OF WASHING WAS ATTEMPTED BUT WAS UNSUCCESSFUL. THE UTILITY HAS REDUCED THE AMOUNT OF WASHING AND HAS CONSIDERED THE INSTALLATION OF REHEAT OR CONSTRUCTION OF A NEW LOW-VELOCITY STACK.
THE PROBLEMS AT SYL LASKIN ARE NOT AS SEVERE AS THE PROBLEMS AT CLAY BOSWELL DUE TO THE FACT THAT THE RECYCLE LOOP IS NOT CLOSED TO THE SAME EXTENT. THE MIST CARRYOVER PROBLEM IS LESS SEVERE OWING TO OPERATION OF THE UNIT AT PARTIAL LOAD RESULTING IN A LOWER STACK VELOCITY.

10/79	SYSTEM							744			
11/79	SYSTEM							720			
12/79	SYSTEM							744			

** PROBLEMS/SOLUTIONS/COMMENTS

NO INFORMATION WAS AVAILABLE FOR THE FOURTH QUARTER 1979.

1/80	SYSTEM							744			
2/80	SYSTEM							696			
3/80	SYSTEM							744			

** PROBLEMS/SOLUTIONS/COMMENTS

THE UTILITY REPORTED THAT THE SCRUBBER EXPERIENCED NO PROBLEMS DURING THE 1ST QUARTER OF 1980.

4/80	SYSTEM							720			
5/80	SYSTEM							744			
6/80	SYSTEM							720			

** PROBLEMS/SOLUTIONS/COMMENTS

THE UTILITY REPORTED THAT NO SCRUBBER-RELATED OUTAGES OCCURRED DURING THE SECOND QUARTER OF 1980. DOWN TIME FOR MAINTENANCE WAS NOT REQUIRED SINCE GENERAL MAINTENANCE CAN BE PERFORMED ON THE MINNESOTA POWER AND LIGHT PAR-

MINNESOTA POWER & LIGHT: SYL LASKIN 2 (CONT.)

PERIOD	MODULE	AVAILABILITY	OPERABILITY	RELIABILITY	UTILIZATION	% REMOVAL SO2	% REMOVAL PART.	PER HOURS	BOILER HOURS	FGD HOURS	CAP. FACTOR
					PERFORMANCE DATA						
			TICLE SCRUBBERS WHILE THEY ARE IN SERVICE.								
7/80	SYSTEM	100.0	100.0	100.0	24.5			744	182	182	12.3
	** PROBLEMS/SOLUTIONS/COMMENTS										
			THE BOILER DID NOT OPERATE MOST OF JULY DUE TO A BOILER INSPECTION. NO PROBLEMS WERE ENCOUNTERED WITH THE FGD UNIT.								
8/80	SYSTEM	100.0	100.0	100.0	15.0			744	115	115	5.0
	** PROBLEMS/SOLUTIONS/COMMENTS										
			THE BOILER OPERATED ONLY 115 HOURS DURING AUGUST DUE TO A LACK OF DEMAND.								
9/80	SYSTEM	100.0	100.0	100.0	5.2			720	39	39	2.4
	** PROBLEMS/SOLUTIONS/COMMENTS										
			THE UTILITY REPORT THAT NO SCRUBBER OUTAGES OCCURRED DURING SEPTEMBER. THE LOW UTILIZATION FACTOR RESULTED FROM A LACK OF DEMAND FOR POWER.								
10/80	SYSTEM	100.0	100.0	100.0	26.3			744	195	195	15.0
11/80	SYSTEM	100.0	100.0	100.0	76.0			720	547	547	37.2
12/80	SYSTEM	100.0	100.0	100.0	70.8			744	527	527	34.9
	** PROBLEMS/SOLUTIONS/COMMENTS										
			THE UTILITY REPORTED THAT NO SCRUBBER-RELATED PROBLEMS WERE ENCOUNTERED DURING THE FOURTH QUARTER.								
1/81	SYSTEM	100.0	100.0	100.0	45.3			744	337	337	23.8
	** PROBLEMS/SOLUTIONS/COMMENTS										
			DURING JANUARY THE BOILER WAS OUT OF SERVICE APPROXIMATELY 407 HOURS DUE TO A LACK OF POWER DEMAND.								
2/81	SYSTEM	100.0	100.0	100.0	97.4			672	653	653	28.5
	** PROBLEMS/SOLUTIONS/COMMENTS										
			DURING FEBRUARY THE UTILITY REPORTED THAT NO SCRUBBER-RELATED PROBLEMS OCCURRED.								
3/81	SYSTEM	100.0			.0			744	0	0	.0
	** PROBLEMS/SOLUTIONS/COMMENTS										
			DURING MARCH THE BOILER WAS OUT OF SERVICE TO FIND THE CAUSE OF A TURBINE VIBRATION.								
4/81	SYSTEM	88.2	100.0	100.0	56.4			720	406	406	26.9
	** PROBLEMS/SOLUTIONS/COMMENTS										
			DURING APRIL 229 HOURS OF DOWN TIME WAS DUE TO A LACK OF DEMAND.								
			THE UNIT WAS DOWN 109 HOURS FOR A BEARING CHECK AND REPAIR DUE TO HIGH VIBRATION.								
5/81	SYSTEM	94.1	100.0	100.0	55.0			744	409	409	28.7

MINNESOTA POWER & LIGHT: SYL LASKIN 2 (CONT.)

PERIOD	MODULE	AVAILABILITY	OPERABILITY	RELIABILITY	UTILIZATION	% REMOVAL SO2	% REMOVAL PART.	PER HOURS	BOILER HOURS	FGD HOURS	CAP. FACTOR
				PERFORMANCE DATA							

** PROBLEMS/SOLUTIONS/COMMENTS

THE BOILER WAS OFF-LINE APPROXIMATELY 210 HOURS IN MAY DUE TO A LACK OF DEMAND.

FOLLOWING A TEST CONDUCTED IN JUNE THE UNIT WAS SHUTDOWN FOR SANDBLASTING THE ID FANS.

6/81	SYSTEM	100.0			.0			720	0	0	

** PROBLEMS/SOLUTIONS/COMMENTS

DURING JUNE THE UNIT WAS OFF-LINE DUE TO A LACK OF DEMAND. DURING THIS PERIOD GENERAL MAINTENANCE WAS PERFORMED.

APPENDIX D
DESIGN AND PERFORMANCE DATA FOR OPERATIONAL PARTICLE SCRUBBERS

COMPANY NAME	MONTANA-DAKOTA UTILITIES	
PLANT NAME	LEWIS & CLARK	
UNIT NUMBER	1	
CITY	SIDNEY	
STATE	MONTANA	
REGULATORY CLASSIFICATION	E	
PARTICULATE EMISSION LIMITATION - NG/J	86.	(.200 LB/MMBTU)
SO2 EMISSION LIMITATION - NG/J	430.	(1.000 LB/MMBTU)
NOX EMISSION LIMITATION - NG/J	******	(****** LB/MMBTU)
NET PLANT GENERATING CAPACITY - MW	50	
GROSS UNIT GENERATING CAPACITY - MW	55	
NET UNIT GENERATING CAPACITY W/FGD - MW	50	
NET UNIT GENERATING CAPACITY WO/FGD - MW	52	
EQUIVALENT SCRUBBED CAPACITY - MW	55	
** UNIT DATA - BOILER AND STACK		
BOILER SUPPLIER	COMBUSTION ENGINEERING	
BOILER TYPE	PULVERIZED COAL	
BOILER SERVICE LOAD	BASE	
DESIGN BOILER FLUE GAS FLOW - CU.M/S	153.37	(325000 ACFM)
BOILER FLUE GAS TEMPERATURE - C	215.6	(420 F)
STACK HEIGHT - M	76.	(250 FT)
STACK SHELL	CARBON STEEL	
STACK TOP DIAMETER - M	4.4	(14.5 FT)
** FUEL DATA		
FUEL TYPE	COAL	
FUEL GRADE	LIGNITE	
AVERAGE HEAT CONTENT - J/G	15003.	(6450 BTU/LB)
RANGE HEAT CONTENT - BTU/LB		6200-6700
AVERAGE ASH CONTENT - %	7.80	
RANGE ASH CONTENT - %	7.2-9.3	
AVERAGE MOISTURE CONTENT - %	36.20	
RANGE MOISTURE CONTENT - %	34.3-38.2	
AVERAGE SULFUR CONTENT - %	.61	
RANGE SULFUR CONTENT - %	0.3-1.4	
AVERAGE CHLORIDE CONTENT - %	.03	
RANGE CHLORIDE CONTENT - %	******	
*** PARTICLE CONTROL		
** MECHANICAL COLLECTOR		
NUMBER	1	
TYPE	MULTICLONE	
SUPPLIER	WESTERN PREC. DIVISION, JOY	
INLET FLUE GAS CAPACITY - CU.M/S	106.2	(225000 ACFM)
INLET FLUE GAS TEMPERATURE - C	176.7	(350 F)
PRESSURE DROP - KPA	.4	(1. IN-H2O)
PARTICLE REMOVAL EFFICENCY -%	85.7	
** ESP		
** PARTICLE SCRUBBER		
GENERIC TYPE	VENTURI TOWER	
SPECIFIC TYPE	VARIABLE-THROAT/BOTTOM-ENTRY LIQUID DISTRIBUTION	
TRADE NAME/COMMON NAME	FLOODED DISC SCRUBBER	
SUPPLIER	RESEARCH-COTTRELL	
DIMENSIONS - FT	10.5 DIA X 27.0	
SHELL GENERIC MATERIAL	CARBON STEEL	
SHELL SPECIFIC MATERIAL	AISI 1110	
LINER GENERIC MATERIAL	ORGANIC	
LINER SPECIFIC MATERIAL	GLASS FLAKE-FILLED POLYESTER	
GAS CONTACTING DEVICE TYPE	NONE	
NUMBER OF CONTACTING ZONES	1	
LIQUID RECIRCULATION RATE - LITER/S	212.6	(3374 GPM)
L/G RATIO - LITER/CU.M	1.7	(13.0 GAL/1000ACF)
PH CONTROL ADDITIVE	LIMESTONE	
PRESSURE DROP - KPA	3.2	(13.0 IN-H2O)
INLET GAS FLOW RATE - CU.M/S	148.0	(313730 ACFM)

MONTANA-DAKOTA UTILITIES: LEWIS & CLARK 1 (CONT.)

INLET GAS TEMPERATURE - C	215.6	(420 F)
ENERGY CONSUMPTION - %	3.6	

PERFORMANCE DATA

PERIOD	MODULE	AVAILABILITY	OPERABILITY	RELIABILITY	UTILIZATION	% REMOVAL SO2	% REMOVAL PART.	PER HOURS	BOILER HOURS	FGD HOURS	CAP. FACTOR
10/79	SYSTEM							720			

** PROBLEMS/SOLUTIONS/COMMENTS

DURING A SCHEDULED BOILER OUTAGE GENERAL SCRUBBER MAINTENANCE WAS PERFORMED.

11/79	SYSTEM							720			

** PROBLEMS/SOLUTIONS/COMMENTS

DURING NOVEMBER THE SCRUBBER WAS TEMPORARILY BYPASSED TO ALLOW FOR REPAIRS NECESSITATED BY A LEAK IN THE FLOODED DISC SCRUBBER.

12/79	SYSTEM							744			

** PROBLEMS/SOLUTIONS/COMMENTS

THE UTILITY REPORTED THAT NO SCRUBBER PROBLEMS OCCURRED DURING DECEMBER.

1/80	SYSTEM							744			
2/80	SYSTEM							696			
3/80	SYSTEM							744			

** PROBLEMS/SOLUTIONS/COMMENTS

DURING THE JANUARY THROUGH MARCH PERIOD THE SCRUBBER WAS AVAILABLE MORE THAN 95% OF THE TIME.

THE EROSION PROBLEM MENTIONED DURING NOVEMBER CONTINUED. SECTIONS OF THE EXTERIOR CARBON STEEL LINED COLUMN WALL SUPPORTING THE FLOODED DISC WERE ERODING, FILLING THE INNER CHAMBER WITH SLURRY AND ULTIMATELY RENDERING THE DISC MOVEMENT MECHANISM INOPERATIVE. THE UTILITY HAS MANAGED TO KEEP THE SCRUBBEER OPERATING AS A STOP-GAP MEASURE BETWEEN UNIT SHUTDOWNS BY INSERTING A GARDEN HOSE IN THE COLUMN HOLES AND CONTINUALLY FLUSHING THE INNER CHAMBER. THE UTILITY HAS HAD SOME SUCCESS IN OTHER EROSION AREAS BY MAKING REPAIRS WITH A HASTELLOY MATERIAL. PLANS ARE BEING MADE TO JACKET THE ENTIRE DISC SUPPORT COLUMN WITH HASTELLOY G.

4/80	SYSTEM							720			
5/80	SYSTEM							744			
6/80	SYSTEM							720			

** PROBLEMS/SOLUTIONS/COMMENTS

THE BOILER WAS SHUT DOWN FOR TWO WEEKS IN MAY.

CREWS INSPECTING THE SCRUBBING SYSTEM DISCOVERED THAT THE NINE FOOT SCRUBBER LINER SECTION AT THE BOTTOM OF THE CYCLONIC MIST ELIMINATOR WAS SEVERELY ERRODED. THE LINER HAS LASTED THREE YEARS. THE UTILITY CONSIDERS THIS A NORMAL MAINTENANCE PROBLEM. AT ONE TIME LINERS IN THIS SECTION WERE REPLACED EVERY SIX MONTHS. REPLACEMENT WORK ON THE LATEST FAILURE IS EXPECTED TO BEGIN BY JULY 21.

THE ENTIRE SCRUBBER COLUMN SUPPORTING THE DISC WHICH WAS ERODING AS REPORTED DURING THE PREVIOUS TWO QUARTERS HAS BEEN CLAD WITH HASTELLOY G.

PERIOD	MODULE	AVAILABILITY	OPERABILITY	RELIABILITY	UTILIZATION	% REMOVAL SO2	% REMOVAL PART.	PER HOURS	BOILER HOURS	FGD HOURS	CAP. FACTOR

THE UTILITY REPORTED THAT THE SCRUBBER HAS EXPERIENCED PLUGGING AT WET/DRY INTERFACES WITHIN THE STRUCTURE. IT APPEARS THAT THIS IS RELATED TO COAL SULFUR CONTENT. WHEN THE SULFUR CONTENT IS RELATIVELY HIGH (0.7 TO 1.0% AT LEWIS AND CLARK) THE PLUGGING DOES NOT OCCUR. LIMESTONE IS ADDED AS REQUIRED TO PREVENT THE OCCURRANCE OF LOW PH LEVELS. WHEN THE SULFUR CONTENT FALLS TO THE 0.3% RANGE THE PH RISES AS A RESULT OF THE ALKALINE CONSTITUENTS IN THE FLY ASH UNTIL SOFT SCALE PLUGGING RESULTS. THE UTILITY HAS CONSIDERED ADDING ACID TO STABILIZE THE PH WHEN THE COAL SULFUR CONTENT DROPS.

7/80	SYSTEM							744			

** PROBLEMS/SOLUTIONS/COMMENTS

DURING JULY TWO WEEKS OF DOWN TIME WAS NECESSARY TO REPLACE THE MIST ELIMINATOR LINER.

THE PROBLEM WITH THE FLOODED DISC BUILDUP MENTIONED EARLIER CONTINUED. THE UTILITY PERFORMS THE NECESSARY REPAIRS IN THREE TO FOUR HOURS WHEN THIS OCCURS.

8/80	SYSTEM							744			
9/80	SYSTEM							720			

** PROBLEMS/SOLUTIONS/COMMENTS

THE UTILITY REPORTED THAT NO MAJOR PROBLEMS WERE ENCOUNTERED WITH SCRUBBING OPERATIONS DURING THE MONTHS OF AUGUST AND SEPTEMBER.

10/80	SYSTEM							744			
11/80	SYSTEM							720			
12/80	SYSTEM							744			

** PROBLEMS/SOLUTIONS/COMMENTS

THE UTILITY REPORTED THAT NO MAJOR PROBLEMS WERE ENCOUNTERED WITH THE SCRUBBING OPERATIONS DURING THE OCTOBER THROUGH DECEMBER PERIOD.

SCRUBBING OPERATIONS WERE SHUTDOWN FOR ONE WEEK DURING THE LAST PART OF OCTOBER FOR A SCHEDULED MAINTENANCE OVERHAUL AND NO PROBLEMS WERE FOUND.

1/81	SYSTEM							744			

** PROBLEMS/SOLUTIONS/COMMENTS

THE UTILITY REPORTED THAT NO MAJOR SCRUBBER PROBLEMS OCCURRED DURING JANUARY.

2/81	SYSTEM							672			

** PROBLEMS/SOLUTIONS/COMMENTS

ON FEBRUARY 10 THE SCRUBBER WAS SHUT DOWN FOR FIVE HOURS DUE TO A PLUGGED VENTURI.

ON FEBRUARY 23 A LEAK WAS DISCOVERED ON THE OUTER WALL OF THE SCRUBBER, LOCATED BELOW THE VENTURI. THE LEAK WAS TEMPORARILY REPAIRED FROM THE OUTSIDE WHILE THE SCRUBBER REMAINED ON-LINE. THE UTILITY PLANNED TO REPAIR THE LEAK DURING THE SCHEDULED OUTAGE IN MARCH.

3/81	SYSTEM							744			

MONTANA-DAKOTA UTILITIES: LEWIS & CLARK 1 (CONT.)

PERFORMANCE DATA										
PERIOD	MODULE	AVAILABILITY	OPERABILITY	RELIABILITY	UTILIZATION	% REMOVAL SO2	% REMOVAL PART.	PER HOURS	BOILER HOURS	FGD HOURS	CAP. FACTOR

** PROBLEMS/SOLUTIONS/COMMENTS

THE SCHEDULED OUTAGE PERIOD WAS HELD FROM MARCH 3 TO 15. DURING THIS TIME THE VENTURI AND SUMP WERE INSPECTED. THE LEAK DISCOVERED EARLIER IN FEBRUARY WAS REPAIRED CORRECTLY.

APPENDIX D
DESIGN AND PERFORMANCE DATA FOR OPERATIONAL PARTICLE SCRUBBERS

COMPANY NAME	PACIFIC POWER & LIGHT	
PLANT NAME	DAVE JOHNSTON	
UNIT NUMBER	4	
CITY	GLENROCK	
STATE	WYOMING	
REGULATORY CLASSIFICATION	C	
PARTICULATE EMISSION LIMITATION - NG/J	90.	(.210 LB/MMBTU)
SO2 EMISSION LIMITATION - NG/J	215.	(.500 LB/MMBTU)
NOX EMISSION LIMITATION - NG/J	******	(****** LB/MMBTU)
NET PLANT GENERATING CAPACITY - MW	*****	
GROSS UNIT GENERATING CAPACITY - MW	330	
NET UNIT GENERATING CAPACITY W/FGD - MW	327	
NET UNIT GENERATING CAPACITY WO/FGD - MW	330	
EQUIVALENT SCRUBBED CAPACITY - MW	330	
** UNIT DATA - BOILER AND STACK		
BOILER SUPPLIER	COMBUSTION ENGINEERING	
BOILER TYPE	PULVERIZED COAL	
BOILER SERVICE LOAD	BASE	
DESIGN BOILER FLUE GAS FLOW - CU.M/S	707.85	(1500000 ACFM)
BOILER FLUE GAS TEMPERATURE - C	132.2	(270 F)
STACK HEIGHT - M	76.	(250 FT)
STACK SHELL	NR	
STACK TOP DIAMETER - M	*******	(***** FT)
** FUEL DATA		
FUEL TYPE	COAL	
FUEL GRADE	SUBBITUMINOUS	
AVERAGE HEAT CONTENT - J/G	17282.	(7430 BTU/LB)
RANGE HEAT CONTENT - BTU/LB		5000-9000
AVERAGE ASH CONTENT - %	12.00	
RANGE ASH CONTENT - %	******	
AVERAGE MOISTURE CONTENT - %	26.00	
RANGE MOISTURE CONTENT - %	******	
AVERAGE SULFUR CONTENT - %	.50	
RANGE SULFUR CONTENT - %	******	
AVERAGE CHLORIDE CONTENT - %	.04	
RANGE CHLORIDE CONTENT - %	******	
*** PARTICLE CONTROL		
** PARTICLE SCRUBBER		
NUMBER	3	
INITIAL START-UP DATE	4/72	
GENERIC TYPE	VENTURI TOWER	
SPECIFIC TYPE	VARIABLE-THROAT/TOP-ENTRY PLUMB BOB	
TRADE NAME/COMMON NAME	N/A	
SUPPLIER	GE ENVIRONMENTAL SERVICES	
SHELL GENERIC MATERIAL	CARBON STEEL	
SHELL SPECIFIC MATERIAL	AISI 1110	
LINER GENERIC MATERIAL	ORGANIC	
LINER SPECIFIC MATERIAL	POLYESTER	
GAS CONTACTING DEVICE TYPE	N/A	
LIQUID RECIRCULATION RATE - LITER/S	409.5	(6500 GPM)
L/G RATIO - LITER/CU.M	1.7	(13.0 GAL/1000ACF)
PH CONTROL ADDITIVE	LIME/ALKALINE FLYASH	
PRESSURE DROP - KPA	2.5	(10.0 IN-H2O)
INLET GAS FLOW RATE - CU.M/S	327.5	(694000 ACFM)
INLET GAS TEMPERATURE - C	135.0	(275 F)
SO2 REMOVAL EFFICENCY - %	40.0	
PARTICLE REMOVAL EFFICIENCY - %	99.7	
ENERGY CONSUMPTION - %	.9	

PACIFIC POWER & LIGHT: DAVE JOHNSTON 4 (CONT.)

PERIOD	MODULE	AVAILABILITY	OPERABILITY	RELIABILITY	UTILIZATION	% REMOVAL SO2	% REMOVAL PART.	PER HOURS	BOILER HOURS	FGD HOURS	CAP. FACTOR
4/72	SYSTEM										
	** PROBLEMS/SOLUTIONS/COMMENTS										
	SINCE STARTUP IN APRIL 1972, THE SCRUBBING UNIT HAS EXPERIENCED MAJOR SCALING PROBLEMS. HARD GYPSUM SCALE ACCUMULATES IN THE SCRUBBER VESSELS AND PIPING. THE USE OF LIME FOR PH CONTROL AND LIGNO SULFONATE TO ALTER THE HARDNESS OF DEPOSITS IMPROVED THE SCALE PROBLEM. FRESH WATER WASHING HAS BEEN REQUIRED TO FLUSH ASH AND SCALE DEPOSITS FROM THE SCRUBBER VESSELS. SOLIDS BUILDUP HAS OCCURRED AT THE WET-DRY INTERFACE AND IN THE BLEED AND RECYCLE LINES. THE UTILITY IS USING AN ADDITIVE (HEXAMATA PHOSPHATE) IN WHICH THE EFFECTS HAVE YET TO BE DETERMINED. ADDITIONAL OPERATING PROBLEMS EXPERIENCED SINCE STARTUP INCLUDE ERROSION IN THE RECYCLE PUMP AND "SILTING" DURING SHUTDOWN. THE UTILITY CHARACTERIZED THE AVAILABILITY AS BEING DEPENDENT ON THE AMOUNT OF BLOWDOWN AND FRESH WATER IRRIGATION THAT ARE EMPLOYED.										
10/79	SYSTEM							744			
11/79	SYSTEM							720			
12/79	SYSTEM							744			
	** PROBLEMS/SOLUTIONS/COMMENTS										
	NO INFORMATION WAS AVAILABLE FOR THE FOURTH QUARTER 1979.										
1/80	SYSTEM							744			
2/80	SYSTEM							696			
3/80	SYSTEM							744			
	** PROBLEMS/SOLUTIONS/COMMENTS										
	NO INFORMATION WAS AVAILABLE FOR THE FIRST QUARTER OF 1980.										
4/80	SYSTEM							720			
5/80	SYSTEM							744			
6/80	SYSTEM							720			
	** PROBLEMS/SOLUTIONS/COMMENTS										
	THE UTILITY REPORTED THAT NO MAJOR PROBLEMS OCCURRED DURING THE SECOND QUARTER OF 1980.										
7/80	SYSTEM							744			
8/80	SYSTEM							744			
9/80	SYSTEM							720			
	** PROBLEMS/SOLUTIONS/COMMENTS										
	NO INFORMATION WAS AVAILABLE FOR THE THIRD QUARTER OF 1980.										
10/80	SYSTEM							744			
11/80	SYSTEM							720			
12/80	SYSTEM							744			

PACIFIC POWER & LIGHT: DAVE JOHNSTON 4 (CONT.)

PERIOD	MODULE	AVAILABILITY	OPERABILITY	RELIABILITY	UTILIZATION	% REMOVAL SO2	% REMOVAL PART.	PER HOURS	BOILER HOURS	FGD HOURS	CAP. FACTOR
				PERFORMANCE DATA							
	** PROBLEMS/SOLUTIONS/COMMENTS										
		THE UTILITY REPORTED THAT NO MAJOR PROBLEMS WERE ENCOUNTERED WITH THE SCRUBBING OPERATIONS DURING THE OCTOBER THROUGH DECEMBER PERIOD.									
1/81	SYSTEM							744			
2/81	SYSTEM							672			
3/81	SYSTEM							744			
	** PROBLEMS/SOLUTIONS/COMMENTS										
		NO INFORMATION WAS AVAILABLE FOR THE FIRST QUARTER 1981.									

APPENDIX D
DESIGN AND PERFORMANCE DATA FOR OPERATIONAL PARTICLE SCRUBBERS

COMPANY NAME	POTOMAC ELECTRIC POWER	
PLANT NAME	DICKERSON	
UNIT NUMBER	1	
CITY	DICKERSON	
STATE	MARYLAND	
REGULATORY CLASSIFICATION	******	
PARTICULATE EMISSION LIMITATION - NG/J	******	(****** LB/MMBTU)
SO2 EMISSION LIMITATION - NG/J	******	(****** LB/MMBTU)
NOX EMISSION LIMITATION - NG/J	******	(****** LB/MMBTU)
NET PLANT GENERATING CAPACITY - MW	1348	
GROSS UNIT GENERATING CAPACITY - MW	190	
NET UNIT GENERATING CAPACITY W/FGD - MW	183	
NET UNIT GENERATING CAPACITY WO/FGD - MW	*****	
EQUIVALENT SCRUBBED CAPACITY - MW	190	
** UNIT DATA - BOILER AND STACK		
BOILER SUPPLIER	COMBUSTION ENGINEERING	
BOILER TYPE	PULVERIZED COAL	
BOILER SERVICE LOAD	******	
DESIGN BOILER FLUE GAS FLOW - CU.M/S	********	(******* ACFM)
BOILER FLUE GAS TEMPERATURE - C	*******	(**** F)
STACK HEIGHT - M	213.	(700 FT)
STACK SHELL	CONCRETE	
STACK TOP DIAMETER - M	*******	(***** FT)
** FUEL DATA		
FUEL TYPE	COAL	
FUEL GRADE	******	
AVERAGE HEAT CONTENT - J/G	27214.	(11700 BTU/LB)
RANGE HEAT CONTENT - BTU/LB		******
AVERAGE ASH CONTENT - %	14.00	
RANGE ASH CONTENT - %	******	
AVERAGE MOISTURE CONTENT - %	********	
RANGE MOISTURE CONTENT - %	6.0-7.0	
AVERAGE SULFUR CONTENT - %	2.00	
RANGE SULFUR CONTENT - %	******	
AVERAGE CHLORIDE CONTENT - %	********	
RANGE CHLORIDE CONTENT - %	******	
*** PARTICLE CONTROL		
** ESP		
TYPE	COLD SIDE	
** PARTICLE SCRUBBER		
INITIAL START-UP DATE	0/78	
GENERIC TYPE	VENTURI TOWER	
SPECIFIC TYPE	VARIABLE-THROAT/TOP-ENTRY PLUMB BOB	
TRADE NAME/COMMON NAME	N/A	
SHELL GENERIC MATERIAL	CARBON STEEL	
SHELL SPECIFIC MATERIAL	AISI 1110	
LINER GENERIC MATERIAL	NR	
LINER SPECIFIC MATERIAL	NR	
GAS CONTACTING DEVICE TYPE	NONE	
NUMBER OF CONTACTING ZONES	2	

PERFORMANCE DATA

PERIOD	MODULE	AVAILABILITY	OPERABILITY	RELIABILITY	UTILIZATION	% REMOVAL SO2	% REMOVAL PART.	PER HOURS	BOILER HOURS	FGD HOURS	CAP. FACTOR
10/79	SYSTEM	100.0		83.6				744	622	622	
11/79	SYSTEM	96.0		80.1				720	601	577	
12/79	SYSTEM	100.0		87.4				744	650	650	

POTOMAC ELECTRIC POWER: DICKERSON 1 (CONT.)

PERIOD	MODULE	AVAILABILITY	OPERABILITY	RELIABILITY	UTILIZATION	% REMOVAL SO2	% REMOVAL PART.	PER HOURS	BOILER HOURS	FGD HOURS	CAP. FACTOR
		PERFORMANCE DATA									
	** PROBLEMS/SOLUTIONS/COMMENTS										
		DURING THIS PERIOD ONLY ONE SCRUBBER RELATED OUTAGE OCCURRED. THE OUTAGE WAS FOR AN ID FAN INSPECTION WHICH LASTED ONE DAY.									
1/80	SYSTEM	100.0	100.0		100.0			744	744	744	
2/80	SYSTEM	94.3	95.8		94.3			696	685	656	
3/80	SYSTEM	100.0	100.0		100.0			744	744	744	
	** PROBLEMS/SOLUTIONS/COMMENTS										
		DURING THE FIRST QUARTER OF 1980 ONLY ONE SCRUBBER OUTAGE OCCURRED. IN FEBRUARY OUTAGE TIME WAS NECESSARY TO REPAIR A SLURRY RECYCLE LINE LEAK.									
4/80	SYSTEM							720			
5/80	SYSTEM							744			
6/80	SYSTEM							720			
	** PROBLEMS/SOLUTIONS/COMMENTS										
		DICKERSON 1 SCRUBBER DEPENDABILITY FACTORS WERE UNAVAILABLE FOR THE APRIL-JUNE PERIOD. THESE FIGURES SHOULD BE AVAILABLE BY THE THIRD QUARTER REPORT. THE UTILITY REPORTED THAT THE FGD SYSTEM OPERATED THE ENTIRE SECOND QUARTER WITH ESSENTIALLY 100% AVAILABILITY. NO SCRUBBER-RELATED PROBLEMS WERE REPORTED.									
7/80	SYSTEM							744			
8/80	SYSTEM							744			
9/80	SYSTEM							720			
	** PROBLEMS/SOLUTIONS/COMMENTS										
		THE UTILITY REPORTED HAVING MINIMAL SCRUBBING SYSTEM PROBLEMS DURING THE JULY-SEPTEMBER PERIOD.									
		THE BOILER CAPACITY WAS REDUCED DURING PART OF THE PERIOD DUE TO A LINING FAILURE IN THE SCRUBBING SYSTEM PIPING.									
10/80	SYSTEM							744			
11/80	SYSTEM							720			
12/80	SYSTEM							744			
	** PROBLEMS/SOLUTIONS/COMMENTS										
		DURING THE OCTOBER THROUGH DECEMBER PERIOD THE BOILER WAS OPERATED AT A 60% (110 MW) CAPACITY DUE TO A LINING FAILURE IN THE SCRUBBING SYSTEM PIPING.									
1/81	SYSTEM	97.0	88.1	91.9	82.1			744	694	611	
	** PROBLEMS/SOLUTIONS/COMMENTS										
		DURING JANUARY APPROXIMATELY 53 HOURS OF OUTAGE TIME WAS CAUSED BY PROBLEMS WITH THE RECYCLE LINE REDUCER AND THE BLEED LINE SPOOL.									
2/81	SYSTEM	.0			.0			672	0	0	

POTOMAC ELECTRIC POWER: DICKERSON 1 (CONT.)

PERFORMANCE DATA

PERIOD	MODULE	AVAILABILITY	OPERABILITY	RELIABILITY	UTILIZATION	% REMOVAL SO2	% REMOVAL PART.	PER HOURS	BOILER HOURS	FGD HOURS	CAP. FACTOR
3/81	SYSTEM	.0			.0			744	0	0	

** PROBLEMS/SOLUTIONS/COMMENTS

DICKERSON UNITS 1, 2 AND 3 WERE SHUT DOWN SO THAT THE STACK AND THE COMMON DUCT LEADING TO THE STACK COULD BE RELINED WITH PLASITE. UNIT 1 WAS SHUT DOWN ON JANUARY 31 AND REMAINED DOWN THROUGHOUT FEBRUARY AND MARCH DUE TO THESE REPAIRS.

APPENDIX D
DESIGN AND PERFORMANCE DATA FOR OPERATIONAL PARTICLE SCRUBBERS

COMPANY NAME	POTOMAC ELECTRIC POWER	
PLANT NAME	DICKERSON	
UNIT NUMBER	2	
CITY	DICKERSON	
STATE	MARYLAND	
REGULATORY CLASSIFICATION	******	
PARTICULATE EMISSION LIMITATION - NG/J	******	(****** LB/MMBTU)
SO2 EMISSION LIMITATION - NG/J	******	(****** LB/MMBTU)
NOX EMISSION LIMITATION - NG/J	******	(****** LB/MMBTU)
NET PLANT GENERATING CAPACITY - MW	1348	
GROSS UNIT GENERATING CAPACITY - MW	190	
NET UNIT GENERATING CAPACITY W/FGD - MW	183	
NET UNIT GENERATING CAPACITY WO/FGD - MW	*****	
EQUIVALENT SCRUBBED CAPACITY - MW	190	
** UNIT DATA - BOILER AND STACK		
BOILER SUPPLIER	COMBUSTION ENGINEERING	
BOILER TYPE	PULVERIZED COAL	
BOILER SERVICE LOAD	******	
DESIGN BOILER FLUE GAS FLOW - CU.M/S	********	(******* ACFM)
BOILER FLUE GAS TEMPERATURE - C	*******	(**** F)
STACK HEIGHT - M	213.	(700 FT)
STACK SHELL	CONCRETE	
STACK TOP DIAMETER - M	*******	(***** FT)
** FUEL DATA		
FUEL TYPE	COAL	
FUEL GRADE	******	
AVERAGE HEAT CONTENT - J/G	27214.	(11700 BTU/LB)
RANGE HEAT CONTENT - BTU/LB		******
AVERAGE ASH CONTENT - %	14.00	
RANGE ASH CONTENT - %	******	
AVERAGE MOISTURE CONTENT - %	********	
RANGE MOISTURE CONTENT - %	6.0-7.0	
AVERAGE SULFUR CONTENT - %	2.00	
RANGE SULFUR CONTENT - %	******	
AVERAGE CHLORIDE CONTENT - %	********	
RANGE CHLORIDE CONTENT - %	******	
*** PARTICLE CONTROL		
** ESP		
TYPE	COLD SIDE	
** PARTICLE SCRUBBER		
INITIAL START-UP DATE	0/78	
GENERIC TYPE	VENTURI TOWER	
SPECIFIC TYPE	VARIABLE-THROAT/TOP-ENTRY PLUMB BOB	
TRADE NAME/COMMON NAME	N/A	
SHELL GENERIC MATERIAL	CARBON STEEL	
SHELL SPECIFIC MATERIAL	AISI 1110	
LINER GENERIC MATERIAL	NR	
LINER SPECIFIC MATERIAL	NR	
GAS CONTACTING DEVICE TYPE	NONE	
NUMBER OF CONTACTING ZONES	2	

PERFORMANCE DATA

PERIOD	MODULE	AVAILABILITY	OPERABILITY	RELIABILITY	UTILIZATION	% REMOVAL SO2	% REMOVAL PART.	PER HOURS	BOILER HOURS	FGD HOURS	CAP. FACTOR
10/79	SYSTEM	100.0	97.0					744	722	722	
11/79	SYSTEM	96.4	88.9					720	664	640	
12/79	SYSTEM	100.0	100.0					744	744	744	

POTOMAC ELECTRIC POWER: DICKERSON 2 (CONT.)

PERIOD	MODULE	AVAILABILITY	OPERABILITY	RELIABILITY	UTILIZATION	% REMOVAL SO2	% REMOVAL PART.	PER HOURS	BOILER HOURS	FGD HOURS	CAP. FACTOR
	** PROBLEMS/SOLUTIONS/COMMENTS										
		A ONE DAY OUTAGE OCCURRED, DUE TO A FAN LINING PROBLEM. NO OTHER SCRUBBER UNIT PROBLEMS WERE ENCOUNTERED DURING THE PERIOD.									
1/80	SYSTEM	95.4	96.4		95.4			744	736	710	
	** PROBLEMS/SOLUTIONS/COMMENTS										
		IN JANUARY THE SCRUBBER WAS DOWN FOR THREE HOURS TO REPAIR A SLURRY RECYCLE LINE LEAK.									
		31 HOURS OF THE OUTAGE TIME IN JANUARY WAS NECESSARY TO REPAIR A RECYCLE PUMP.									
2/80	SYSTEM	100.0	100.0		100.0			696	696	696	
3/80	SYSTEM	96.9	96.9		96.9			744	744	721	
	** PROBLEMS/SOLUTIONS/COMMENTS										
		IN MARCH THE SCRUBBER WAS DOWN FOR A SCRUBBER LINING WARRANTY INSPECTION. NO REPAIR WORK WAS NECESSARY.									
4/80	SYSTEM							720			
5/80	SYSTEM							744			
6/80	SYSTEM							720			
	** PROBLEMS/SOLUTIONS/COMMENTS										
		DICKERSON 2 SCRUBBER DEPENDABILITY FACTORS WERE UNAVAILABLE FOR THE APRIL-JUNE PERIOD. THESE FIGURES SHOULD BE AVAILABLE BY THE THIRD QUARTER REPORT. THE UTILITY REPORTED THAT THE FGD SYSTEM OPERATED THE ENTIRE SECOND QUARTER WITH ESSENTIALLY 100% AVAILABILITY. NO SCRUBBER-RELATED PROBLEMS WERE REPORTED.									
7/80	SYSTEM							744			
8/80	SYSTEM							744			
9/80	SYSTEM							720			
	** PROBLEMS/SOLUTIONS/COMMENTS										
		THE UTILITY HAS NOT FIGURED OUT THE DEPENDABILITY FIGURES AS YET.									
		THE UTILITY REPORTED HAVING MINIMAL SCRUBBING SYSTEM PROBLEMS DURING THE JULY-SEPTEMBER PERIOD.									
		THE BOILER CAPACITY WAS REDUCED DURING PART OF THE PERIOD DUE TO A LINING FAILURE IN THE SCRUBBING SYSTEM PIPING.									
10/80	SYSTEM							744			
11/80	SYSTEM							720			
12/80	SYSTEM							744			

POTOMAC ELECTRIC POWER: DICKERSON 2 (CONT.)

PERIOD	MODULE	AVAILABILITY	OPERABILITY	RELIABILITY	UTILIZATION	% REMOVAL SO2	% REMOVAL PART.	PER HOURS	BOILER HOURS	FGD HOURS	CAP. FACTOR
		PERFORMANCE DATA									
	** PROBLEMS/SOLUTIONS/COMMENTS										
		DURING THE OCTOBER THROUGH DECEMBER PERIOD THE BOILER WAS OPERATED AT A 60% (110 MW) CAPACITY DUE TO A LINING FAILURE IN THE SCRUBBING SYSTEM PIPING.									
1/81	SYSTEM	96.9	92.8	100.0	81.9			744	654	607	
2/81	SYSTEM	.0			.0			672	0	0	
3/81	SYSTEM	.0			.0			744	0	0	
	** PROBLEMS/SOLUTIONS/COMMENTS										
		DICKERSON UNITS 1, 2 AND 3 WERE SHUT DOWN SO THAT THE STACK AND THE COMMON DUCT LEADING TO THE STACK COULD BE RELINED WITH PLASITE. UNIT 2 WAS SHUT DOWN ON JANUARY 31 AND REMAINED DOWN THROUGHOUT FEBRUARY AND MARCH DUE TO THESE REPAIRS.									

APPENDIX D
DESIGN AND PERFORMANCE DATA FOR OPERATIONAL PARTICLE SCRUBBERS

COMPANY NAME	POTOMAC ELECTRIC POWER	
PLANT NAME	DICKERSON	
UNIT NUMBER	3	
CITY	DICKERSON	
STATE	MARYLAND	
REGULATORY CLASSIFICATION	******	
PARTICULATE EMISSION LIMITATION - NG/J	******	(****** LB/MMBTU)
SO2 EMISSION LIMITATION - NG/J	688.	(1.600 LB/MMBTU)
NOX EMISSION LIMITATION - NG/J	******	(****** LB/MMBTU)
NET PLANT GENERATING CAPACITY - MW	548	
GROSS UNIT GENERATING CAPACITY - MW	190	
NET UNIT GENERATING CAPACITY W/FGD - MW	178	
NET UNIT GENERATING CAPACITY WO/FGD - MW	182	
EQUIVALENT SCRUBBED CAPACITY - MW	95	
** UNIT DATA - BOILER AND STACK		
BOILER SUPPLIER	COMBUSTION ENGINEERING	
BOILER TYPE	PULVERIZED COAL	
BOILER SERVICE LOAD	BASE	
DESIGN BOILER FLUE GAS FLOW - CU.M/S	278.42	(590000 ACFM)
BOILER FLUE GAS TEMPERATURE - C	126.1	(259 F)
STACK HEIGHT - M	213.	(700 FT)
STACK SHELL	CONCRETE	
STACK TOP DIAMETER - M	*******	(***** FT)
** FUEL DATA		
FUEL TYPE	COAL	
FUEL GRADE	BITUMINOUS	
AVERAGE HEAT CONTENT - J/G	27214.	(11700 BTU/LB)
RANGE HEAT CONTENT - BTU/LB	******	
AVERAGE ASH CONTENT - %	14.00	
RANGE ASH CONTENT - %	******	
AVERAGE MOISTURE CONTENT - %	********	
RANGE MOISTURE CONTENT - %	6.0-7.0	
AVERAGE SULFUR CONTENT - %	2.00	
RANGE SULFUR CONTENT - %	******	
AVERAGE CHLORIDE CONTENT - %	********	
RANGE CHLORIDE CONTENT - %	******	
*** PARTICLE CONTROL		
** MECHANICAL COLLECTOR		
NUMBER	0	
TYPE	NONE	
** FABRIC FILTER		
NUMBER	0	
TYPE	NONE	
** PARTICLE SCRUBBER		
NUMBER	1	
INITIAL START-UP DATE	9/75	
GENERIC TYPE	VENTURI TOWER	
SPECIFIC TYPE	VARIABLE-THROAT/TOP-ENTRY PLUMB BOB	
TRADE NAME/COMMON NAME	N/A	
SUPPLIER	GE ENVIRONMENTAL SERVICES	
SHELL GENERIC MATERIAL	CARBON STEEL	
SHELL SPECIFIC MATERIAL	AISI 1110	
LINER GENERIC MATERIAL	ORGANIC	
LINER SPECIFIC MATERIAL	FIBER-REINFORCED POLYESTER	
GAS CONTACTING DEVICE TYPE	NONE	
L/G RATIO - LITER/CU.M	2.7	(20.0 GAL/1000ACF)
PRESSURE DROP - KPA	2.7	(11.0 IN-H2O)
INLET GAS FLOW RATE - CU.M/S	139.2	(295000 ACFM)
INLET GAS TEMPERATURE - C	126.1	(259 F)
PARTICLE REMOVAL EFFICIENCY - %	99.0	
ENERGY CONSUMPTION - %	2.1	

POTOMAC ELECTRIC POWER: DICKERSON 3 (CONT.)

PERIOD	MODULE	PERFORMANCE DATA: AVAILABILITY	OPERABILITY	RELIABILITY	UTILIZATION	% REMOVAL SO2	% REMOVAL PART.	PER HOURS	BOILER HOURS	FGD HOURS	CAP. FACTOR
9/73	SYSTEM							720			
10/73	SYSTEM							744			
11/73	SYSTEM							720			
12/73	SYSTEM							744			
1/74	SYSTEM							744			

** PROBLEMS/SOLUTIONS/COMMENTS

PROBLEMS DURING THIS PERIOD RANGED FROM CORROSION LEAKS IN EXPANSION JOINTS TO PROBLEMS IN MATERIAL HANDLING EQUIPMENT, FEEDING AND SLAKING OF MGO, PLUGGING IN THE MGO MIX TANK AND SUCTION LINES TO THE MGO MAKE-UP PUMPS.

2/74	SYSTEM							672			
3/74	SYSTEM							744			
4/74	SYSTEM							720			

** PROBLEMS/SOLUTIONS/COMMENTS

MAINTENANCE AND MODIFICATIONS WERE PERFORMED ON THE SYSTEM. THE MAJOR SYSTEM REVISION MADE DURING THIS PERIOD WAS THE ADDITION OF A PRE-MIX TANK IN THE MGO SYSTEM.

5/74	SYSTEM							744			
6/74	SYSTEM							720			
7/74	SYSTEM							744			

** PROBLEMS/SOLUTIONS/COMMENTS

LIMITED OPERATION OCCURRED BECAUSE THE UTILITY DID NOT HAVE ACCESS TO THE EPA CALCINING FACILITY AT THE ESSEX CHEMICAL COMPANY SULFURIC ACID PLANT. BY THE END OF JUNE 1974, ALL THE MGO AT DICKERSON HAD BEEN USED AND A SILO PLUS THREE CARS WERE FULL OF MGSO3.

8/74	SYSTEM							744		87	
9/74	SYSTEM							720			
10/74	SYSTEM							744			
11/74	SYSTEM							720			
12/74	SYSTEM							744			

** PROBLEMS/SOLUTIONS/COMMENTS

DURING THIS PERIOD THE SYSTEM GENERALLY OPERATED AT 75 PERCENT OF THE DESIGN GAS FLOW.

1/75	SYSTEM							744			

** PROBLEMS/SOLUTIONS/COMMENTS

PROBLEMS DEVELOPED IN THE BUCKET ELEVATOR TRANSPORTING THE MGSO3 FROM THE DRYER TO THE STORAGE SILO.

2/75	SYSTEM							672			

POTOMAC ELECTRIC POWER: DICKERSON 3 (CONT.)

PERIOD	MODULE	AVAILABILITY	OPERABILITY	RELIABILITY	UTILIZATION	% REMOVAL SO2	% REMOVAL PART.	PER HOURS	BOILER HOURS	FGD HOURS	CAP. FACTOR
3/75	SYSTEM							744			
4/75	SYSTEM							720			
5/75	SYSTEM							744			
6/75	SYSTEM							720			
7/75	SYSTEM							744			

** PROBLEMS/SOLUTIONS/COMMENTS

UNIT NO. 3 WAS TAKEN OUT OF SERVICE FOR AN 8 TO 12 WEEK TURBINE OVERHAUL. THE SCRUBBER WAS INSPECTED, MAINTENANCE AND MODIFICATIONS WERE MADE.

8/75	SYSTEM							744			

** PROBLEMS/SOLUTIONS/COMMENTS

THE FGD SYSTEM CONSISTS OF A SINGLE, TWO-STAGE SCRUBBER/ABSORBER, WHICH INCORPORATES AN ADJUSTABLE-THROAT VENTURI SCRUBBER FOR PARTICULATE REMOVAL AND A SECOND STAGE ABSORBER WITH A FIXED VENTURI TO REMOVE SO2. THE LIQUOR STREAMS FOR BOTH STAGES ARE SEPARATE AND OPERATE IN A CLOSED-LOOP MODE. UNTIL MID-1975 THE MAGNESIUM SULFITE GENERATED WAS TRANSFERRED TO AN EPA FINANCED FACILITY AT THE ESSEX CHEMICAL COMPANY SULFURIC ACID MANUFACTURING PLANT IN RUMFORD, RHODE ISLAND WHERE MAGNESIUM OXIDE WAS REGENERATED AND SO2 FROM THE REGENERATION PROCESS WAS CONVERTED TO SULFURIC ACID. THE RUMFORD FACILITY HAS SINCE BEEN CLOSED DOWN.

CONSTRUCTION WAS COMPLETED IN AUGUST AND THE SYSTEM STARTED UP IN SEPTEMBER 1973. DURING INTERMITTENT OPERATIONS FOR SHAKEDOWN THROUGH JANUARY 1974, THE SYSTEM'S LONGEST CONTINUOUS RUN WAS 271 HOURS. THE SYSTEM HAS RE-STARTED FROM JULY THROUGH DECEMBER 1974, AND AGAIN ON AUGUST 11, 1975, FOR APPROXIMATELY 87 HOURS.

FGD UNIT OUTAGES WERE CAUSED PRIMARILY BY PIPE AND PUMP CORROSION AND MAJOR TURBINE OVERHAUL OF THE BOILER. PARTICULATE AND SO2 REMOVAL EFFICIENCY GUARANTEES WERE CORROBORATED DURING OPERATIONAL PHASES.

THE FGD SYSTEM WAS RESTARTED IN AUGUST. STEAM WAS LOST TO THE MGO MIX TANK, RESULTING IN A VERY MOIST PRODUCT FROM THE CENTRIFUGE. CAKING IN THE DRYER OCCURRED. AT THIS POINT, THE UTILITY DECIDED TO TEST ONLY THE FIRST-STAGE OF THE SCRUBBING SYSTEM, TAKING GAS AHEAD OF THE PRECIPITATOR. FGD OPERATION AT DICKERSON TERMINATED AT THIS POINT.

THE REMAINING SUPPLY OF MAGNESIUM OXIDE, ABOUT 100 TONS (10 DAYS), HAS BEEN DEPLETED, AND THE DICKERSON UNIT HAS BEEN TERMINATED AS A FGD SYSTEM.

9/75	SYSTEM							720			
10/75	SYSTEM							744			
11/75	SYSTEM							720			
12/75	SYSTEM							744			
1/76	SYSTEM							744			
2/76	SYSTEM							696			
3/76	SYSTEM							744			
4/76	SYSTEM							720			

PERIOD	MODULE	PERFORMANCE DATA: AVAILABILITY	OPERABILITY	RELIABILITY	UTILIZATION	% REMOVAL SO2	% REMOVAL PART.	PER HOURS	BOILER HOURS	FGD HOURS	CAP. FACTOR
5/76	SYSTEM							744			
6/76	SYSTEM							720			
7/76	SYSTEM							744			
8/76	SYSTEM							744			
9/76	SYSTEM							720			
10/76	SYSTEM							744			
11/76	SYSTEM							720			
12/76	SYSTEM							744			
1/77	SYSTEM							744			
2/77	SYSTEM							672			
3/77	SYSTEM							744			
4/77	SYSTEM							720			
5/77	SYSTEM							744			
6/77	SYSTEM							720			
7/77	SYSTEM							744			
8/77	SYSTEM							744			
9/77	SYSTEM							720			
10/77	SYSTEM							744			
11/77	SYSTEM							720			
12/77	SYSTEM							744			
1/78	SYSTEM							744			
2/78	SYSTEM	38.0	38.0		38.0			672	672	252	

** PROBLEMS/SOLUTIONS/COMMENTS

THERE HAVE BEEN MANY MAINTENANCE PROBLEMS AND PROBLEMS WITH LINER FAILURES. SINCE SHIFTING FROM SO2 TO PARTICULATE SCRUBBING ONLY, PLUGGING PROBLEMS HAVE NOT OCCURRED. LOW PH HAS CAUSED CORROSION WHICH WAS AGGRAVATED BY PARTICULATE ERROSION. THE UTILITY WILL PROBABLY RELINE WITH A FLAKE GLASS TYPE LINER. NO CHEMICALS (E.G. LIME) ARE ADDED TO THE CIRCULATING LIQUOR FOR PH BALANCE.

OUTAGE TIME WAS CAUSED BY LEAK REPAIRS IN SLURRY PIPING.

3/78	SYSTEM	21.0	22.0		21.0			744	717	156	

** PROBLEMS/SOLUTIONS/COMMENTS

OUTAGE TIME WAS DUE TO RUBBER LINING FAILURE IN THE RECYCLE PUMP DISCHARGE LINE.

4/78	SYSTEM	80.7	79.8		76.4			720	689	550	

POTOMAC ELECTRIC POWER: DICKERSON 3 (CONT.)

PERIOD	MODULE	AVAILABILITY	OPERABILITY	RELIABILITY	UTILIZATION	% REMOVAL SO2	% REMOVAL PART.	PER HOURS	BOILER HOURS	FGD HOURS	CAP. FACTOR
		PERFORMANCE DATA									
	** PROBLEMS/SOLUTIONS/COMMENTS										
		26 HOURS OF OUTAGE TIME WERE DUE TO SMALL LEAKS IN PIPING.									
5/78	SYSTEM	84.5	82.7		74.0			744	666	551	
	** PROBLEMS/SOLUTIONS/COMMENTS										
		A LEAK OCCURRED IN A MIST ELIMINATOR DRAIN.									
		THERE WAS A LEAK IN A BLEED LINE FOR THE SCRUBBER RECYCLE CIRCUIT.									
		OUTAGE TIME WAS REQUIRED FOR BLEED LINE REPLACEMENT.									
6/78	SYSTEM	100.0	90.1		68.7			720	549	495	
7/78	SYSTEM	100.0	.0		.0			744	16	0	
	** PROBLEMS/SOLUTIONS/COMMENTS										
		THE VENTURI SCRUBBER HAD AN AVAILABILITY OF 100% FOR JUNE AND JULY. THE ONLY VENTURI OUTAGE TIME WAS IN JUNE. THE OUTAGE TIME WAS REQUIRED TO TIE IN EQUIPMENT COMMON TO THE NEW UNIT AND UNIT 3.									
		THE BOILER WAS DOWN IN JULY FOR AN OVERHAUL.									
		THE REASON VENTURI HOURS CAN BE LOWER THAN BOILER HOURS WHEN THE VENTURI HAS A 100% AVAILABILITY IS BECAUSE THE VENTURI IS NOT OPERATED UNDER LOW LOAD CONDITIONS.									
8/78	SYSTEM							744			
9/78	SYSTEM							720			
10/78	SYSTEM							744			
11/78	SYSTEM							720			
12/78	SYSTEM							744			
1/79	SYSTEM							744			
2/79	SYSTEM							672			
3/79	SYSTEM							744			
4/79	SYSTEM							720			
5/79	SYSTEM							744			
	** PROBLEMS/SOLUTIONS/COMMENTS										
		SCRUBBER OUTAGE HOURS SINCE SEPTEMBER 1978 (I.E. SEPTEMBER 1978 THROUGH MAY 30, 1979) TOTAL 140. THE UTILITY INDICATED THAT IT IS NO LONGER ALLOWABLE TO BYPASS THE SCRUBBER WHEN PROBLEMS OCCUR, CLEANING THE PARTICULATE MATTER SOLELY WITH THE ESP. THE UTILITY MUST DROP THE BOILER LOAD SO THE UNIT REMAINS IN COMPLIANCE. THERE HAVE BEEN NO PROBLEMS REPORTED FOR THE LAST FEW MONTHS. THE UTILITY IS KEEPING AHEAD OF PROBLEMS WITH A CONSCIENTIOUS INSPECTION AND MAINTENANCE PROGRAM.									
6/79	SYSTEM							720			
7/79	SYSTEM							744			

POTOMAC ELECTRIC POWER: DICKERSON 3 (CONT.)

PERIOD	MODULE	AVAILABILITY	OPERABILITY	RELIABILITY	UTILIZATION	% REMOVAL SO2	% REMOVAL PART.	PER HOURS	BOILER HOURS	FGD HOURS	CAP. FACTOR
8/79	SYSTEM							744			
9/79	SYSTEM							720			
10/79	SYSTEM		98.6		95.4			744	720	710	

** PROBLEMS/SOLUTIONS/COMMENTS

A TEN HOUR OUTAGE OCCURRED FOR REPAIRS OF A LEAD LINE LEAK.

11/79	SYSTEM		95.2		88.8			720	672	640	

** PROBLEMS/SOLUTIONS/COMMENTS

IN NOVEMBER, 8 HOURS OUTAGE TIME WAS REQUIRED TO REPAIR A LEAK IN A RECYCLE LINE.

12/79	SYSTEM		96.1		93.5			744	724	696	

** PROBLEMS/SOLUTIONS/COMMENTS

AN OUTAGE FOR GENERAL INSPECTION TOOK PLACE DURING DECEMBER.

1/80	SYSTEM	78.7	88.2		78.7			744	664	586	

** PROBLEMS/SOLUTIONS/COMMENTS

DURING JANUARY THE SCRUBBER WAS DOWN TO REPAIR THE FLAKEGLASS LINING.

2/80	SYSTEM	100.0	100.0		100.0			696	696	696	
3/80	SYSTEM	100.0	100.0		100.0			744	744	744	

** PROBLEMS/SOLUTIONS/COMMENTS

DURING FEBRUARY AND MARCH THE SCRUBBER OPERATED WITH NO MAJOR PROBLEMS.

4/80	SYSTEM							720			
5/80	SYSTEM							744			
6/80	SYSTEM							720			

** PROBLEMS/SOLUTIONS/COMMENTS

THE UNIT 3 SCRUBBER EXPERIENCED SOME DOWN TIME DURING THE APRIL-JUNE PERIOD AS A RESULT OF THE CONTINUING DETERIORATION OF THE SCRUBBER FLAKEGLASS LINING. THE UTILITY REPORTED THAT MAINTENANCE CREWS ARE PATCHING OLD PATCHES. A STUDY WILL BEGIN IN LATE JULY TO ESTABLISH THE OPTIMUM LINER MATERIAL AND APPLICATION STRATEGY FOR THE UNIT 3 SCRUBBING SYSTEM.

7/80	SYSTEM							744			
8/80	SYSTEM							744			
9/80	SYSTEM							720			

** PROBLEMS/SOLUTIONS/COMMENTS

THE UTILITY HAS NOT FIGURED OUT THE DEPENDABILITY FIGURES AS YET.

THE UTILITY REPORTED HAVING MINIMAL SCRUBBING SYSTEM PROBLEMS DURING THE JULY-SEPTEMBER PERIOD.

POTOMAC ELECTRIC POWER: DICKERSON 3 (CONT.)

PERIOD	MODULE	AVAILABILITY	OPERABILITY	RELIABILITY	UTILIZATION	% REMOVAL SO2	% REMOVAL PART.	PER HOURS	BOILER HOURS	FGD HOURS	CAP. FACTOR

THE BOILER CAPACITY WAS REDUCED TO 1/2 LOAD DURING PART OF THE PERIOD DUE TO THE NECESSARY PATCHING OF THE SCRUBBER LINING. THE UTILITY IS PRESENTLY STUDYING THE POSSIBILITY OF REPLACING THE FLAKEGLASS LINER WITH A RUBBER LINER.

10/80	SYSTEM							744			
11/80	SYSTEM							720			
12/80	SYSTEM							744			

** PROBLEMS/SOLUTIONS/COMMENTS

DURING THE OCTOBER THROUGH DECEMBER PERIOD THE BOILER WAS OPERATED AT A 60% (110 MW) CAPACITY DUE TO A LINING FAILURE IN THE SCRUBBING SYSTEM PIPING.

UNIT 3 WILL BE SHUTDOWN ON FEBRUARY 2, 1981 TO REPLACE THE FLAKEGLASS LINING.

1/81	SYSTEM	96.8	96.9	97.5	94.2			744	723	701	
2/81	SYSTEM	.0			.0			672	0	0	
3/81	SYSTEM	.0			.0			744	0	0	

** PROBLEMS/SOLUTIONS/COMMENTS

DICKERSON UNITS 1, 2 AND 3 WERE SHUT DOWN SO THAT THE STACK AND THE COMMON DUCT LEADING TO THE STACK COULD BE RELINED WITH PLASITE. UNIT 3 WAS SHUT DOWN ON JANUARY 30 AND REMAINED DOWN THROUGHOUT FEBRUARY AND MARCH DUE TO THESE REPAIRS.

APPENDIX D
DESIGN AND PERFORMANCE DATA FOR OPERATIONAL PARTICLE SCRUBBERS

COMPANY NAME	PUBLIC SERVICE OF COLORADO	
PLANT NAME	ARAPAHOE	
UNIT NUMBER	4	
CITY	DENVER	
STATE	COLORADO	
REGULATORY CLASSIFICATION	D	
PARTICULATE EMISSION LIMITATION - NG/J	43.	(.100 LB/MMBTU)
SO2 EMISSION LIMITATION - NG/J	******	(****** LB/MMBTU)
NOX EMISSION LIMITATION - NG/J	******	(****** LB/MMBTU)
NET PLANT GENERATING CAPACITY - MW	*****	
GROSS UNIT GENERATING CAPACITY - MW	112	
NET UNIT GENERATING CAPACITY W/FGD - MW	109	
NET UNIT GENERATING CAPACITY WO/FGD - MW	*****	
EQUIVALENT SCRUBBED CAPACITY - MW	112	
** UNIT DATA - BOILER AND STACK		
BOILER SUPPLIER	******	
BOILER TYPE	PULVERIZED COAL	
BOILER SERVICE LOAD	******	
DESIGN BOILER FLUE GAS FLOW - CU.M/S	245.39	(520000 ACFM)
BOILER FLUE GAS TEMPERATURE - C	148.9	(300 F)
STACK HEIGHT - M	******	(**** FT)
STACK SHELL	NR	
STACK TOP DIAMETER - M	*******	(***** FT)
** FUEL DATA		
FUEL TYPE	COAL 1 (50%)	
FUEL GRADE	SUBBITUNINOUS; BITUMINOU	
AVERAGE HEAT CONTENT - J/G	23609.	(10150 BTU/LB)
RANGE HEAT CONTENT - BTU/LB		******
AVERAGE ASH CONTENT - %	10.90	
RANGE ASH CONTENT - %	******	
AVERAGE MOISTURE CONTENT - %	12.45	
RANGE MOISTURE CONTENT - %	******	
AVERAGE SULFUR CONTENT - %	.80	
RANGE SULFUR CONTENT - %	0.6-1.0; NR	
AVERAGE CHLORIDE CONTENT - %	.01	
RANGE CHLORIDE CONTENT - %	******	
*** PARTICLE CONTROL		
** MECHANICAL COLLECTOR		
NUMBER	1	
** FABRIC FILTER		
NUMBER	0	
TYPE	NONE	
** ESP		
NUMBER	1	
** PARTICLE SCRUBBER		
NUMBER	1	
INITIAL START-UP DATE	9/73	
GENERIC TYPE	PACKED TOWER	
SPECIFIC TYPE	MOBILE BED PACKING	
TRADE NAME/COMMON NAME	TURBULENT CONTACT ABSORBER	
SUPPLIER	AIR CORRECTION DIVISION, UOP	
SHELL GENERIC MATERIAL	CARBON STEEL	
SHELL SPECIFIC MATERIAL	AISI 1110	
LINER GENERIC MATERIAL	ORGANIC	
LINER SPECIFIC MATERIAL	NATURAL RUBBER	
GAS CONTACTING DEVICE TYPE	STAINLESS STEEL	
NUMBER OF CONTACTING ZONES	3	
L/G RATIO - LITER/CU.M	7.5	(56.0 GAL/1000ACF)
PH CONTROL ADDITIVE	ALKALINE FLYASH	
PRESSURE DROP - KPA	3.0	(12.0 IN-H2O)
SUPERFICIAL GAS VELOCITY - M/S	3.4	(11.0 FT/S)
INLET GAS FLOW RATE - CU.M/S	245.4	(520000 ACFM)

PUBLIC SERVICE OF COLORADO: ARAPAHOE 4 (CONT.)

INLET GAS TEMPERATURE - C	151.7	(305 F)
SO2 REMOVAL EFFICENCY - %	30.0	
PARTICLE REMOVAL EFFICIENCY - %	93.0	

PERIOD	MODULE	AVAILABILITY	OPERABILITY	RELIABILITY	UTILIZATION	% REMOVAL SO2	% REMOVAL PART.	PER HOURS	BOILER HOURS	FGD HOURS	CAP. FACTOR
9/77	SYSTEM										

** PROBLEMS/SOLUTIONS/COMMENTS

SINCE STARTUP IN SEPTEMBER 1977 SCALING AND PLUGGING AT THE WET/DRY ZONE, ON THE FIRST STAGE GRIDS, AND IN THE REHEATERS HAVE BEEN THE MOST PROMINENT PROBLEM AREAS CHARACTERIZED BY THIS SYSTEM. VARIOUS CHEMICAL ADDITIVES HAVE BEEN TESTED FOR CONTROL OF SCALING, INCLUDING PHOSPHATED ESTERS, BUT WITHOUT SIGNIFICANT IMPROVEMENT. BLOWDOWN IS MAINTAINED AT A HIGH LEVEL TO CHECK THE BUILDUP OF SALTS BUT, OTHER THAN FOR TESTING PURPOSES, NO CHEMICAL CONTROL METHOD HAS BEEN USED TO CONTROL SCALE ACCUMULATION. OTHER OPERATING EXPERIENCES INCLUDE WEAR AND PERIODIC REPLACEMENT OF THE MOBILE BALLS, EROSION OF LINING AND CORROSIVE FAILURE OF REHEATERS. THE EROSION AND LINING FAILURE HAVE NOT BEEN A SERIOUS PROBLEM EXCEPT IN THE RECIRCULATING PUMPS.

10/79	SYSTEM							744			
11/79	SYSTEM							720			
12/79	SYSTEM							744			

** PROBLEMS/SOLUTIONS/COMMENTS

DURING THE FOURTH QUARTER REHEATER FAILURES OCCURRED.

LEAKAGE IN THE INLINE STEAM TUBES HAS BEEN ENCOUNTERED. CORROSION IS KNOWN TO OCCUR AFTER LEAKS ARE EXPERIENCED.

THE PRIMARY PROBLEM WITH THE SYSTEM IS THE INABILITY TO ISOLATE MODULES. IF A PROBLEM OCCURS NO MODULE MAINTENANCE CAN BE PERFORMED UNLESS THE UNIT LOAD IS CUT BACK OR THE UNIT IS SHUT DOWN.

1/80	SYSTEM							744			
2/80	SYSTEM							696			
3/80	SYSTEM							744			

** PROBLEMS/SOLUTIONS/COMMENTS

THE MODULE ISOLATION PROBLEMS CONTINUED THROUGH THE FIRST QUARTER OF 1980. USE OF THE CARBON STEEL DAMPERS HAS BEEN ABANDONED. THE PROGRAM FOR REPLACING THE DAMPERS HAS BEEN SUSPENDED INDEFINITELY. THE UNIT IS SHUTDOWN WHEN MAJOR SCRUBBER PROBLEMS OCCUR.

REHEATER STEAM TUBE LEAKS ARE STILL CAUSING PROBLEMS. THE SIX STEAM COILS ON THIS IN-LINE REHEAT SYSTEM, TWO OF WHICH ARE 316SS AND FOUR OF WHICH ARE CARBON STEEL, ARE EXPERIENCING CORROSION PROBLEMS. A SOLUTION TO THE PROBLEM HAS NOT YET BEEN DETERMINED.

IN FEBRUARY THE UTILITY REPLACED THE SCRUBBER BALLS AND GRIDS. THE OLD BALLS WERE REPLACED WITH THE NEW HOLLOW HARD PLASTIC-WALLED BALLS WITH NOTCHED SEAMS. THE GRIDS WERE ORIGINALLY 316L SS, CERAMIC, POLYPROPYLENE, AND RUBBER LINED CARBON STEEL, BUT HAVE BEEN REPLACED WITH 317L SS GRIDS.

THE SCRUBBERS OPERATED CONTINUOUSLY THROUGHOUT THE QUARTER EXCEPT FOR THE BALL AND GRID REPLACEMENT DOWNTIME.

4/80	SYSTEM		100.0		100.0			720	720	720	

PUBLIC SERVICE OF COLORADO: ARAPAHOE 4 (CONT.)

PERIOD	MODULE	AVAILABILITY	OPERABILITY	RELIABILITY	UTILIZATION	% REMOVAL SO2	% REMOVAL PART.	PER HOURS	BOILER HOURS	FGD HOURS	CAP. FACTOR
5/80	SYSTEM		100.0		100.0			744	744	744	
6/80	SYSTEM		100.0		100.0			720	720	720	

** PROBLEMS/SOLUTIONS/COMMENTS

BOTH BOILER AND SCRUBBERS OPERATED THE ENTIRE APRIL-JUNE PERIOD.

THE ISOLATION DAMPERS ARE STILL EFFECTIVELY INOPERABLE AND A REPLACEMENT PLAN AS YET HAS NOT BEEN REESTABLISHED.

THE UTILITY REPORTED THAT THE REHEATER TUBE LEAK PROBLEM CONTINUED THROUGH THE SECOND QUARTER. THE TUBES WILL BE ENTIRELY REPLACED WITH NEW 316L SS BUNDLES DURING THE NEXT SCHEDULED OUTAGE IN NOVEMBER AND DECEMBER. DURING THE SECOND QUARTER MORE TUBES WERE BLANKED OFF AFTER STEAM LEAKS OCCURRED. TO DATE ROUGHLY 50% OF THE TUBES ARE SEALED OFF AND ARE OUT OF SERVICE BECAUSE OF LEAKS THAT OCCURRED OVER THE PAST MONTHS.

PERIOD	MODULE	AVAILABILITY	OPERABILITY	RELIABILITY	UTILIZATION	% REMOVAL SO2	% REMOVAL PART.	PER HOURS	BOILER HOURS	FGD HOURS	CAP. FACTOR
7/80	SYSTEM	100.0	100.0	100.0	100.0			744	744	744	
8/80	SYSTEM	100.0	100.0	100.0	100.0			744	744	744	
9/80	SYSTEM	100.0	100.0	100.0	100.0			720	720	720	

** PROBLEMS/SOLUTIONS/COMMENTS

THE BOILER AND SCRUBBERS OPERATED ACCEPTABLY DURING THE JULY-SEPTEMBER PERIOD. NO PLANS HAVE BEEN MADE TO REPAIR THE ISOLATION DAMPERS. THE FAULTY REHEATER TUBES WILL BE REPLACED DURING THE SCHEDULED OUTAGE NOW SET FOR THE FIRST THREE WEEKS OF DECEMBER.

PERIOD	MODULE	PER HOURS
10/80	SYSTEM	744
11/80	SYSTEM	720
12/80	SYSTEM	744

** PROBLEMS/SOLUTIONS/COMMENTS

DURING THE OCTOBER THROUGH DECEMBER PERIOD THE REHEATER TUBES WERE NOT REPLACED AND THE UNIT IS OPERATING WITHOUT REHEAT UNTIL THE NEXT SCHEDULED OUTAGE PERIOD IN FEBRUARY 1981.

NO MAJOR SCRUBBER RELATED PROBLEMS WERE ENCOUNTERED, EXCEPT THE REPLACEMENT OF THE DISCHARGE VALVE ON THE RECIRCULATION PUMP.

PERIOD	MODULE	PER HOURS
1/81	SYSTEM	744
2/81	SYSTEM	672
3/81	SYSTEM	744

** PROBLEMS/SOLUTIONS/COMMENTS

DURING THE SCHEDULED FOUR WEEK OUTAGE STARTING JANUARY 30 AND ENDING FEBRUARY 24, TWO NEW A-SIDE REHEATER BUNDLES WERE INSTALLED. THE UNIT WAS THEN RESTARTED.

THE UNIT HOWEVER HAD TO BE SHUT DOWN ON FEBRUARY 24 ONLY AFTER OPERATING 3 HOURS DUE TO OPERATOR ERROR. THE BOOSTER FAN WAS RESTARTED WITHOUT ITS OIL BEARING COOLING SYSTEM. CONSEQUENTLY, THE FAN BEARINGS WERE DAMAGE AND THE BOOSTER FAN HAD TO BE SHUT DOWN. THE UTILITY HAS SINCE REPAIRED THE FAN SHAFT BUT STILL AWAITS FOR THE REPAIRED FAN BEARINGS BEFORE THE UNIT CAN BE

PUBLIC SERVICE OF COLORADO: ARAPAHOE 4 (CONT.)

PERIOD	MODULE	AVAILABILITY	OPERABILITY	RELIABILITY	UTILIZATION	% REMOVAL SO2	% REMOVAL PART.	PER HOURS	BOILER HOURS	FGD HOURS	CAP. FACTOR
		RESTARTED.									

APPENDIX D
DESIGN AND PERFORMANCE DATA FOR OPERATIONAL PARTICLE SCRUBBERS

COMPANY NAME	PUBLIC SERVICE OF COLORADO	
PLANT NAME	CHEROKEE	
UNIT NUMBER	1	
CITY	DENVER	
STATE	COLORADO	
REGULATORY CLASSIFICATION	D	
PARTICULATE EMISSION LIMITATION - NG/J	43.	(.100 LB/MMBTU)
SO2 EMISSION LIMITATION - NG/J	******	(****** LB/MMBTU)
NOX EMISSION LIMITATION - NG/J	******	(****** LB/MMBTU)
NET PLANT GENERATING CAPACITY - MW	710	
GROSS UNIT GENERATING CAPACITY - MW	115	
NET UNIT GENERATING CAPACITY W/FGD - MW	100	
NET UNIT GENERATING CAPACITY WO/FGD - MW	105	
EQUIVALENT SCRUBBED CAPACITY - MW	102	
** UNIT DATA - BOILER AND STACK		
BOILER SUPPLIER	BABCOCK & WILCOX	
BOILER TYPE	PULVERIZED COAL	
BOILER SERVICE LOAD	******	
DESIGN BOILER FLUE GAS FLOW - CU.M/S	245.39	(520000 ACFM)
BOILER FLUE GAS TEMPERATURE - C	146.1	(295 F)
STACK HEIGHT - M	******	(**** FT)
STACK SHELL	NR	
STACK TOP DIAMETER - M	*******	(***** FT)
** FUEL DATA		
FUEL TYPE	COAL	
FUEL GRADE	BITUMINOUS	
AVERAGE HEAT CONTENT - J/G	23493.	(10100 BTU/LB)
RANGE HEAT CONTENT - BTU/LB		******
AVERAGE ASH CONTENT - %	12.50	
RANGE ASH CONTENT - %	9.4-12.5	
AVERAGE MOISTURE CONTENT - %	11.30	
RANGE MOISTURE CONTENT - %	******	
AVERAGE SULFUR CONTENT - %	.65	
RANGE SULFUR CONTENT - %	******	
AVERAGE CHLORIDE CONTENT - %	.01	
RANGE CHLORIDE CONTENT - %	******	
*** PARTICLE CONTROL		
** MECHANICAL COLLECTOR		
NUMBER	1	
** FABRIC FILTER		
NUMBER	0	
TYPE	NONE	
** ESP		
NUMBER	1	
** PARTICLE SCRUBBER		
NUMBER	1	
INITIAL START-UP DATE	6/73	
GENERIC TYPE	PACKED TOWER	
SPECIFIC TYPE	MOBILE BED PACKING	
TRADE NAME/COMMON NAME	TURBULENT CONTACT ABSORBER	
SUPPLIER	AIR CORRECTION DIVISION, UOP	
SHELL GENERIC MATERIAL	CARBON STEEL	
SHELL SPECIFIC MATERIAL	AISI 1110	
LINER GENERIC MATERIAL	ORGANIC	
LINER SPECIFIC MATERIAL	NATURAL RUBBER	
GAS CONTACTING DEVICE TYPE	STAINLESS STEEL	
NUMBER OF CONTACTING ZONES	3	
L/G RATIO - LITER/CU.M	7.5	(56.0 GAL/1000ACF)
PH CONTROL ADDITIVE	ALKALINE FLYASH	
PRESSURE DROP - KPA	3.2	(13.0 IN-H2O)
SUPERFICIAL GAS VELOCITY - M/S	3.4	(11.0 FT/S)
INLET GAS FLOW RATE - CU.M/S	164.4	(348400 ACFM)

PUBLIC SERVICE OF COLORADO: CHEROKEE 1 (CONT.)

INLET GAS TEMPERATURE - C	146.1	(295 F)
SO2 REMOVAL EFFICENCY - %	16.0	
PARTICLE REMOVAL EFFICIENCY - %	97.0	
ENERGY CONSUMPTION - %	4.3	

PERIOD	MODULE	AVAILABILITY	OPERABILITY	RELIABILITY	UTILIZATION	% REMOVAL SO2	% REMOVAL PART.	PER HOURS	BOILER HOURS	FGD HOURS	CAP. FACTOR
		PERFORMANCE DATA									
6/73	SYSTEM										

** PROBLEMS/SOLUTIONS/COMMENTS

SINCE STARTUP IN JUNE 1973 SCALING AND PLUGGING AT THE WET/DRY ZONE, ON THE FIRST STAGE GRIDS, AND IN THE REHEATERS HAVE BEEN THE MOST PROMINENT PROBLEM AREAS CHARACTERIZED BY THIS SYSTEM. VARIOUS CHEMICAL ADDITIVES HAVE BEEN TESTED FOR CONTROL OF SCALING, INCLUDING PHOSPHATED ESTERS, BUT WITHOUT SIGNIFICANT IMPROVEMENT. BLOWDOWN IS MAINTAINED AT A HIGH LEVEL TO CHECK THE BUILDUP OF SALTS BUT, OTHER THAN FOR TESTING PURPOSES NO CHEMICAL CONTROL METHOD HAS BEEN USED TO CONTROL SCALE ACCUMULATION. OTHER OPERATING EXPERIENCES INCLUDE WEAR AND PERIODIC REPLACEMENT OF THE MOBILE BALLS, EROSION OF LINING AND CORROSIVE FAILURE OF REHEATERS. THE EROSION AND LINING FAILURE HAVE NOT BEEN A SERIOUS PROBLEM EXCEPT IN THE RECIRCULATING PUMPS.

10/79	SYSTEM							744			
11/79	SYSTEM							720			
12/79	SYSTEM							744			

** PROBLEMS/SOLUTIONS/COMMENTS

DURING THE PERIOD ID FAN FAILURES HAVE OCCURRED DUE TO EROSION FROM THE FLYASH.

THE ISOLATION DAMPER HAS BEEN A PROBLEM DUE TO FREEZE UPS MAKING IT INOPERATIVE.

REHEATER FAILURES HAVE OCCURRED DUE TO PLUGGING OF THE HOT AIR INJECTION STEAM COILS.

THE SCRUBBER EXIT DUCTWORK WILL BE REPAIRED TEMPORARILY WITH A SPRAY ON FIBERGLASS-LIKE MATERIAL.

1/80	SYSTEM					100.0	100.0	744	744	744	
2/80	SYSTEM					100.0	100.0	696	696	696	
3/80	SYSTEM					100.0	100.0	744	744	744	

** PROBLEMS/SOLUTIONS/COMMENTS

THE SCRUBBERS OPERATED CONTINUOUSLY THROUGHOUT THE FIRST QUARTER OF 1980.

THE ISOLATION DAMPERS HAVE NOT CAUSED ANY PROBLEMS BECAUSE MODULE ISOLATION WAS NOT REQUIRED DURING THE PERIOD.

THE FANS ARE STILL EXPERIENCING EROSION PROBLEMS.

IN MARCH A BOILER/SCRUBBER OVERHAUL BEGAN. DURING THIS TIME THE CARBON STEEL ISOLATION DAMPERS WILL BE REPLACED WITH 316 SS. THE NEW FANS WILL BE INSTALLED IN THE OLD HOUSINGS. THE NEW HIGH STRENGTH CARBON STEEL FANS WILL BE EQUIPPED WITH REPLACABLE CHROMIUM ALLOY WEAR PLATE BLADE TIPS.

4/80	SYSTEM							720			
5/80	SYSTEM							744			

PUBLIC SERVICE OF COLORADO: CHEROKEE 1 (CONT.)

PERIOD	MODULE	PERFORMANCE DATA: AVAILABILITY	OPERABILITY	RELIABILITY	UTILIZATION	% REMOVAL SO2	% REMOVAL PART.	PER HOURS	BOILER HOURS	FGD HOURS	CAP. FACTOR
6/80	SYSTEM							720			
	** PROBLEMS/SOLUTIONS/COMMENTS										
		THE 1B ID FAN WAS SEVERELY ERRODED. THE FAN WAS REBUILT DURING THE OUTAGE.									
		THE OLD CARBON STEEL ISOLATION DAMPERS WERE REPLACED WITH 316 SS DAMPERS DURING THE CONTINUING MAY-JULY OUTAGE.									
7/80	SYSTEM							744			
8/80	SYSTEM							744			
9/80	SYSTEM							720			
	** PROBLEMS/SOLUTIONS/COMMENTS										
		SHAFT BEARING FAILURES ON THE RECIRCULATION PUMP CAUSED SCRUBBER SYSTEM PROBLEMS THROUGHOUT THE JULY-SEPTEMBER PERIOD.									
10/80	SYSTEM							744			
11/80	SYSTEM							720			
12/80	SYSTEM							744			
	** PROBLEMS/SOLUTIONS/COMMENTS										
		THE UTILITY REPORTED NO MAJOR PROBLEMS WERE ENCOUNTERED DURING THE OCTOBER THROUGH DECEMBER PERIOD. HOWEVER, SHAFT BEARING REPAIRS WERE MADE TO THE RECIRCULATION PUMPS.									
1/81	SYSTEM							744			
	** PROBLEMS/SOLUTIONS/COMMENTS										
		DURING THE MONTH OF JANUARY THE UNIT WAS SHUT DOWN FOR THE ENTIRE MONTH FOR A GENERAL SCRUBBER OVERHAUL. THE OVERHAUL INCLUDED THE REPLACEMENT OF THE SCRUBBER BALLS AND REPAIR WORK TO THE SCRUBBER BALL PARTITIONS.									
2/81	SYSTEM							672			
	** PROBLEMS/SOLUTIONS/COMMENTS										
		UTILITY REPORTED THAT NO SCRUBBER RELATED PROBLEMS OCCURRED DURING THE MONTH OF FEBRUARY.									
3/81	SYSTEM							744			
	** PROBLEMS/SOLUTIONS/COMMENTS										
		DURING PART OF MARCH THE UNIT WAS FORCED TO SHUT DOWN DUE TO A FROZEN GUILLOTINE INLET DAMPER.									

APPENDIX D
DESIGN AND PERFORMANCE DATA FOR OPERATIONAL PARTICLE SCRUBBERS

COMPANY NAME	PUBLIC SERVICE OF COLORADO	
PLANT NAME	CHEROKEE	
UNIT NUMBER	4	
CITY	DENVER	
STATE	COLORADO	
REGULATORY CLASSIFICATION	D	
PARTICULATE EMISSION LIMITATION - NG/J	43.	(.100 LB/MMBTU)
SO2 EMISSION LIMITATION - NG/J	******	(****** LB/MMBTU)
NOX EMISSION LIMITATION - NG/J	******	(****** LB/MMBTU)
NET PLANT GENERATING CAPACITY - MW	710	
GROSS UNIT GENERATING CAPACITY - MW	375	
NET UNIT GENERATING CAPACITY W/FGD - MW	350	
NET UNIT GENERATING CAPACITY WO/FGD - MW	375	
EQUIVALENT SCRUBBED CAPACITY - MW	356	
** UNIT DATA - BOILER AND STACK		
BOILER SUPPLIER	COMBUSTION ENGINEERING	
BOILER TYPE	PULVERIZED COAL	
BOILER SERVICE LOAD	******	
DESIGN BOILER FLUE GAS FLOW - CU.M/S	717.29	(1520000 ACFM)
BOILER FLUE GAS TEMPERATURE - C	135.0	(275 F)
STACK HEIGHT - M	******	(**** FT)
STACK SHELL	NR	
STACK TOP DIAMETER - M	*******	(***** FT)
** FUEL DATA		
FUEL TYPE	COAL	
FUEL GRADE	BITUMINOUS	
AVERAGE HEAT CONTENT - J/G	23493.	(10100 BTU/LB)
RANGE HEAT CONTENT - BTU/LB		******
AVERAGE ASH CONTENT - %	12.50	
RANGE ASH CONTENT - %	9.4-12.5	
AVERAGE MOISTURE CONTENT - %	11.30	
RANGE MOISTURE CONTENT - %	******	
AVERAGE SULFUR CONTENT - %	.65	
RANGE SULFUR CONTENT - %	******	
AVERAGE CHLORIDE CONTENT - %	.01	
RANGE CHLORIDE CONTENT - %	******	
*** PARTICLE CONTROL		
** MECHANICAL COLLECTOR		
NUMBER	1	
** FABRIC FILTER		
NUMBER	0	
TYPE	NONE	
** ESP		
NUMBER	1	
** PARTICLE SCRUBBER		
NUMBER	4	
INITIAL START-UP DATE	7/74	
GENERIC TYPE	PACKED TOWER	
SPECIFIC TYPE	MOBILE BED PACKING	
TRADE NAME/COMMON NAME	TURBULENT CONTACT ABSORBER	
SUPPLIER	AIR CORRECTION DIVISION, UOP	
SHELL GENERIC MATERIAL	CARBON STEEL	
SHELL SPECIFIC MATERIAL	AISI 1110	
LINER GENERIC MATERIAL	ORGANIC	
LINER SPECIFIC MATERIAL	NATURAL RUBBER	
GAS CONTACTING DEVICE TYPE	STAINLESS STEEL	
NUMBER OF CONTACTING ZONES	3	
L/G RATIO - LITER/CU.M	7.5	(56.0 GAL/1000ACF)
PH CONTROL ADDITIVE	ALKALINE FLYASH	
PRESSURE DROP - KPA	3.2	(13.0 IN-H2O)
SUPERFICIAL GAS VELOCITY - M/S	3.4	(11.0 FT/S)
SO2 REMOVAL EFFICENCY - %	16.0	

PUBLIC SERVICE OF COLORADO: CHEROKEE 4 (CONT.)

PARTICLE REMOVAL EFFICIENCY - % 97.0
ENERGY CONSUMPTION - % 6.7

PERFORMANCE DATA

PERIOD	MODULE	AVAILABILITY	OPERABILITY	RELIABILITY	UTILIZATION	% REMOVAL SO2	% REMOVAL PART.	PER HOURS	BOILER HOURS	FGD HOURS	CAP. FACTOR
7/74	SYSTEM										

** PROBLEMS/SOLUTIONS/COMMENTS

SINCE STARTUP IN JULY 1974 SCALING AND PLUGGING AT THE WET/DRY ZONE, ON THE FIRST STAGE GRIDS, AND IN THE REHEATERS HAVE BEEN THE MOST PROMINENT PROBLEM AREAS CHARACTERIZED BY THIS SYSTEM. VARIOUS CHEMICAL ADDITIVES HAVE BEEN TESTED FOR CONTROL OF SCALING, INCLUDING PHOSPHATED ESTERS, BUT WITHOUT SIGNIFICANT IMPROVEMENT. BLOWDOWN IS MAINTAINED AT A HIGH LEVEL TO CHECK THE BUILDUP OF SALTS BUT, OTHER THAN FOR TESTING PURPOSES NO CHEMICAL CONTROL METHOD HAS BEEN USED TO CONTROL SCALE ACCUMULATION. OTHER OPERATING EXPERIENCES INCLUDE WEAR AND PERIODIC REPLACEMENT OF THE MOBILE BALLS, EROSION OF LINING AND CORROSIVE FAILURE OF REHEATERS. THE EROSION AND LINING FAILURE HAVE NOT BEEN A SERIOUS PROBLEM EXCEPT IN THE RECIRCULATING PUMPS.

10/79	SYSTEM							744			
11/79	SYSTEM							720			
12/79	SYSTEM							744			

** PROBLEMS/SOLUTIONS/COMMENTS

DURING THE PERIOD ID FAN FAILURES HAVE OCCURRED DUE TO EROSION FROM THE FLYASH.

THE ISOLATION DAMPER HAS BEEN A PROBLEM DUE TO FREEZE UPS MAKING IT INOPERATIVE.

REHEATER FAILURES HAVE OCCURRED DUE TO PLUGGING OF THE HOT AIR INJECTION STEAM COILS.

THE SCRUBBER EXIT DUCTWORK WILL BE REPAIRED TEMPORARILY WITH A SPRAY ON FIBERGLASS LIKE MATERIAL.

1/80	SYSTEM							744			
2/80	SYSTEM							696			
3/80	SYSTEM							744			

** PROBLEMS/SOLUTIONS/COMMENTS

THE OUTLET DUCT WORK IS BEING REBUILT INTERNALLY WITH FIBERGLASS FOR STRUCTURAL SUPPORT AND ACID RESISTANCE. WITH REGULAR MAINTENANCE THE UTILITY EXPECTS THIS TO PROVE TO BE A PERMANENT SOLUTION TO THE EROSION/ CORROSION PROBLEM.

THE OLD FANS ARE BEING REPLACED WITH HIGH STRENGTH CARBON STEEL FANS HAVING REPLACABLE CHROMIUM ALLOY WEAR PLATE BLADE TIPS.

4/80	SYSTEM							720			
5/80	SYSTEM							744			
6/80	SYSTEM							720			

PUBLIC SERVICE OF COLORADO: CHEROKEE 4 (CONT.)

PERIOD	MODULE	AVAILABILITY	OPERABILITY	RELIABILITY	UTILIZATION	% REMOVAL SO2	% REMOVAL PART.	PER HOURS	BOILER HOURS	FGD HOURS	CAP. FACTOR
	** PROBLEMS/SOLUTIONS/COMMENTS										
		THE NEW FANS DESCRIBED DURING THE LAST REPORT PERIOD WERE INSTALLED IN ONE OF THE FOUR MODULES. NEW FANS WILL BE INSTALLED IN THE OTHER THREE MODULES DURING A SCHEDULED LATE SEPTEMBER OUTAGE UNLESS THE UTILITY HAS AN OPPORTUNITY TO MAKE THE REPLACEMENTS SOONER.									
7/80	SYSTEM								744		
	** PROBLEMS/SOLUTIONS/COMMENTS										
		THE SCRUBBER RETURNED TO SERVICE IN MID JULY AFTER A TWO WEEK OUTAGE. DURING THIS TIME, THE FIBERGLASS INSIDE THE DUCTWORK WAS REPLACED, AND A VERTICAL GRID WAS INSTALLED ON THE SECOND LEVEL OF THE MOBILE BED TOWER TO IMPROVE SYSTEM PERFORMANCE.									
8/80	SYSTEM								744		
9/80	SYSTEM								720		
	** PROBLEMS/SOLUTIONS/COMMENTS										
		THE BOILER AND FGD SYSTEM WENT DOWN ON SEPTEMBER 15, 1980 FOR A SCHEDULED OVERHAUL. DURING THIS TIME, FANS WERE INSTALLED ON MODULES A, C, AND D.									
		THE UTILITY IS CURRENTLY EVALUATING THE VERTICAL GRID ON THE SECOND LAYER. IF THE GRID IMPROVES SYSTEM PERFORMANCE, THEY WILL INSTALL ANOTHER ONE ON THE THIRD LEVEL.									
10/80	SYSTEM								744		
11/80	SYSTEM								720		
12/80	SYSTEM								744		
	** PROBLEMS/SOLUTIONS/COMMENTS										
		UNIT 4 EXPERIENCED SOME MINOR REHEATER LEAKAGE PROBLEMS DURING THE PERIOD.									
		DURING THE FOURTH QUARTER OF 1980 THE UTILITY REPORTED THAT PROBLEMS WERE ENCOUNTERED WHEN VERITICAL GRIDS WERE INSTALLED ON THE SCRUBBER BED. THIS WAS INTENDED TO SOLVE THE PROBLEM OF KEEPING THE SCRUBBER BALLS FROM MOVING HORIZONTALLY, RESULTING IN PILES OF SCRUBBER BALLS IN LOCALIZED AREAS, BUT CORROSION AND SYSTEM PERFORMANCE DID NOT IMPROVE.									
1/81	SYSTEM								744		
2/81	SYSTEM								672		
3/81	SYSTEM								744		
	** PROBLEMS/SOLUTIONS/COMMENTS										
		THROUGHOUT THE JANUARY-MARCH PERIOD THE UTILITY INTERMITTENTLY SHUT DOWN THE SCRUBBER MODULES (ONE MODULE AT A TIME) TO REPLACE SCRUBBER BALLS AND REPAIR SCRUBBER BALL PARTITIONS.									
		THE UTILITY REPORTED EXPERIENCING CORROSION PROBLEMS WITH THE FOUR SCRUBBER BOOSTER FANS.									

APPENDIX D
DESIGN AND PERFORMANCE DATA FOR OPERATIONAL PARTICLE SCRUBBERS

COMPANY NAME	PUBLIC SERVICE OF COLORADO	
PLANT NAME	VALMONT	
UNIT NUMBER	5	
CITY	VALMONT	
STATE	COLORADO	
REGULATORY CLASSIFICATION	E	
PARTICULATE EMISSION LIMITATION - NG/J	43.	(.100 LB/MMBTU)
SO2 EMISSION LIMITATION - NG/J	******	(****** LB/MMBTU)
NOX EMISSION LIMITATION - NG/J	******	(****** LB/MMBTU)
NET PLANT GENERATING CAPACITY - MW	274	
GROSS UNIT GENERATING CAPACITY - MW	166	
NET UNIT GENERATING CAPACITY W/FGD - MW	157	
NET UNIT GENERATING CAPACITY WO/FGD - MW	163	
EQUIVALENT SCRUBBED CAPACITY - MW	166	
** UNIT DATA - BOILER AND STACK		
BOILER SUPPLIER	COMBUSTION ENGINEERING	
BOILER TYPE	PULVERIZED COAL	
BOILER SERVICE LOAD	BASE	
DESIGN BOILER FLUE GAS FLOW - CU.M/S	436.98	(926000 ACFM)
BOILER FLUE GAS TEMPERATURE - C	126.7	(260 F)
STACK HEIGHT - M	******	(**** FT)
STACK SHELL	NR	
STACK TOP DIAMETER - M	*******	(***** FT)
** FUEL DATA		
FUEL TYPE	COAL	
FUEL GRADE	SUBBITUMINOUS	
AVERAGE HEAT CONTENT - J/G	25121.	(10800 BTU/LB)
RANGE HEAT CONTENT - BTU/LB		******
AVERAGE ASH CONTENT - %	6.00	
RANGE ASH CONTENT - %	5.4-7.0	
AVERAGE MOISTURE CONTENT - %	15.00	
RANGE MOISTURE CONTENT - %	12.7-18.3	
AVERAGE SULFUR CONTENT - %	.70	
RANGE SULFUR CONTENT - %	0.6-0.7	
AVERAGE CHLORIDE CONTENT - %	********	
RANGE CHLORIDE CONTENT - %	******	
*** PARTICLE CONTROL		
** MECHANICAL COLLECTOR		
NUMBER	1	
INLET FLUE GAS CAPACITY - CU.M/S	218.5	(463000 ACFM)
** FABRIC FILTER		
NUMBER	0	
TYPE	NONE	
** ESP		
NUMBER	1	
TYPE	COLD SIDE	
INLET FLUE GAS CAPACITY - CU.M/S	218.5	(463000 ACFM)
** PARTICLE SCRUBBER		
NUMBER	2	
INITIAL START-UP DATE	11/71	
GENERIC TYPE	PACKED TOWER	
SPECIFIC TYPE	MOBILE BED PACKING	
TRADE NAME/COMMON NAME	TURBULENT CONTACT ABSORBER	
SUPPLIER	AIR CORRECTION DIVISION, UOP	
SHELL GENERIC MATERIAL	CARBON STEEL	
SHELL SPECIFIC MATERIAL	AISI 1110	
LINER GENERIC MATERIAL	ORGANIC	
LINER SPECIFIC MATERIAL	NATURAL RUBBER	
GAS CONTACTING DEVICE TYPE	STAINLESS STEEL	
NUMBER OF CONTACTING ZONES	3	
L/G RATIO - LITER/CU.M	7.8	(58.3 GAL/1000ACF)
PH CONTROL ADDITIVE	LIMESTONE/ALKALINE FLYASH	

PUBLIC SERVICE OF COLORADO: VALMONT 5 (CONT.)

PRESSURE DROP - KPA	3.7	(15.0 IN-H2O)
SUPERFICIAL GAS VELOCITY - M/S	3.4	(11.0 FT/S)
INLET GAS FLOW RATE - CU.M/S	109.2	(231500 ACFM)
INLET GAS TEMPERATURE - C	132.8	(271 F)
SO2 REMOVAL EFFICENCY - %	45.0	
PARTICLE REMOVAL EFFICIENCY - %	96.0	
ENERGY CONSUMPTION - %	3.6	

PERFORMANCE DATA

PERIOD	MODULE	AVAILABILITY	OPERABILITY	RELIABILITY	UTILIZATION	% REMOVAL SO2	% REMOVAL PART.	PER HOURS	BOILER HOURS	FGD HOURS	CAP. FACTOR
11/71	SYSTEM							720			

** PROBLEMS/SOLUTIONS/COMMENTS

THE FIRST PARTICLE MATTER SCRUBBER COMMENCED OPERATION IN NOVEMBER 1971. THE SCRUBBER WAS ORIGINALLY INSTALLED FOR PARTICLE MATTER REMOVAL SINCE THE PLANT BURNS LOW SULFUR COAL; HOWEVER, 45% OF THE SO2 IS REMOVED AS WELL BECAUSE OF THE ALKALINITY OF THE FLYASH.

DURING THE FIRST YEAR OF OPERATION PROBLEMS INCLUDED DIFFICULTIES WITH THE MODULE PACKING GRID SUPPORT, GENERAL VESSEL SCALE FORMATION, FLOW DISTRIBUTION PROBLEMS, BALL BREAKAGE, SCALING IN THE MIST ELIMINATOR SECTION, AND PLUGGING OF THE REHEATER. SCALE FORMATION WAS THE MOST PREDOMINANT CONTINUING MAJOR CAUSE OF DOWNTIME IN THE SCRUBBER. SCALE ACCUMULATION WAS NOTED ON THE WET-DRY INTERFACE IMMEDIATELY DOWNSTREAM OF THE PRESATURATION NOZZLES. SCALE ALSO ACCUMULATED HEAVILY ON THE UNDERSIDE OF THE FIRST LAYER OF GRID BARS.
SCALE ON THE UPPER GRID BARS WAS LESS PREVALENT AS THE ACTION OF THE "PING PONG" BALLS TENDED TO KEEP THE SCALE OFF OF THESE SECTIONS. SCALE ALSO COLLECTED ON THE WALLS OF THE VESSEL AND INTERMITTENTLY SLOUGHED OFF AND FELL INTO THE SUMP IN LARGE PIECES CAUSING BLOCKAGE OF THE RECIRCULATION PUMP SUCTION SCREENS. SCALING OF THE MIST ELIMINATOR ABATED SOMEWHAT WITH THE INTRODUCTION OF A CLEAR RINSE WATER WASH. SCALE FORMATION IN THE REHEAT SECTION SOMETIMES REQUIRED SUPPLEMENTAL CLEANING OF THE REHEATER IN ADDITION TO THE CLEANING OBTAINED BY THE USE OF THE SOOTBLOWERS WHICH WERE INSTALLED AS A PART OF THE REHEATER EQUIPMENT. UNDER NORMAL OPERATION, THE SOOTBLOWERS LOCATED IN THIS REHEAT SECTION WERE FAIRLY SUCCESSFUL IN REMOVING THE ACCUMULATION OF THE SCALE IN THE REHEATER.
ALTHOUGH MANY OF THE INITIAL START-UP PROBLEMS WERE SOLVED OVER A PERIOD OF TIME, THE CALCIUM SULFATE-FLYASH SCALING CONTINUED TO BE A SIGNIFICANT OPERATING PROBLEM AT THE VALMONT INSTALLATION. IN ADDITION TO THESE SCALING RELIABILITY PROBLEMS, A WATER QUALITY CONCERN ALSO SURFACED THAT WAS A DIRECT RESULT OF THE PARTICLE SCRUBBER OPERATION. THE RELATIVELY HIGH CAO CONCENTRATION IN THE VALMONT FLYASH RESULTED IN FAIRLY HIGH SO2 REMOVAL RATES (45-50 PERCENT) WITHIN THE UNITS. SINCE NO PH CONTROL CAPABILITY FOR EITHER THE RECIRCULATING SLURRY OR THE SYSTEM BLOWDOWN SLURRY WAS DESIGNED INTO THE SYSTEM, AN ACID CONDITION WAS CREATED IN THE SLURRY AND THE BLOWDOWN STREAM. PH LEVELS OF THE BLOWDOWN NORMALLY RANGED BETWEEN 1.7 AND 2.0. ALTHOUGH THE STREAM WAS NEUTRALIZED TO A DEGREE BY ALKALINE FLYASH, PSCC FELT THAT IT WAS IMPORTANT TO INVESTIGATE VARIOUS CONTROL MEASURES WHICH COULD BE APPLIED TO THIS STREAM. THE CALCIUM SULFATE SCALING PROBLEM WAS THOUGHT TO BE THE RESULT OF A SUPER-SATURATED CALCIUM SULFATE CONDITION IN THE RECIRCULATING SLURRY. BECAUSE OF THIS IT WAS FELT THAT CONTINUOUS PH CONTROL OF THE RECIRCULATING SLURRY, CONVERSION OF THE SYSTEM TO CLOSED LOOP OPERATION AND ESTABLISHING A HIGHER CONCENTRATION OF SEEDING SOLIDS IN THE RECIRCULATION SLURRY (THEREBY CONTROLLING THE SCALING PROBLEMS WITHOUT CHEMICAL ADDITIVES) WOULD BE NECESSARY MEASURES.
FOR PH CONTROL, LIMESTONE WAS TESTED INITIALLY, THEN LIME WAS UTILIZED FOR THE ALKALI REAGENT. IN THE FIRST TEST, SINCE LIMESTONE UTILIZATION WAS A MAJOR CONCERN, A SPECIAL EFFORT WAS MADE TO REDUCE THE POTENTIAL FOR THE SHORT CIRCUITING OF THE ADDED LIMESTONE AND TO PROVIDE SUFFICIENT RESIDENCE TIME IN THE REACTOR SECTION OF THE SYSTEM. BY UTILIZING FOUR REACTION MIX TANKS IN SERIES, PLUG FLOW WAS EXPECTED TO BE MORE CLOSELY SIMULATED. TO MAINTAIN A CLOSED LOOP SYSTEM WHERE THE QUANTITY OF WATER REMOVED FROM THE SYSTEM WAS HELD TO A MINIMUM, FOUR SYSTEM DESIGN FEATURES WERE UTILIZED.

1. UTILIZATION OF A COMBINATION OF POND SUPERNATANT AND MAKE-UP WATER

PERIOD	MODULE	AVAILABILITY	OPERABILITY	RELIABILITY	UTILIZATION	% REMOVAL SO2	% REMOVAL PART.	PER BOILER HOURS	FGD HOURS	CAP. FACTOR
						PERFORMANCE DATA				

FOR RECYCLE WATER.
2. PRESATURATION OF THE INCOMING FLUE GAS WITH RECIRCULATING SLURRY.
3. INTERMITTENT MIST ELIMINATOR WASH.
4. PROPER SELECTION OF MATERIALS OF CONSTRUCTION TO PROTECT AGAINST ATTACK CAUSED BY HIGH CHLORIDE CONCENTRATIONS.

THE SCRUBBERS R & D FACILITY WAS NOT EQUIPPED WITH A MECHANICAL THICKENER FOR CONTROL OF THE SUSPENDED SOLIDS CONCENTRATION OF THE RECIRCULATING SLURRY (ALL PURGED MATERIAL WAS SENT TO THE SLUDGE POND). WITH A 500 PPM SO2 CONCENTRATION IN THE FLUE GAS, IT IS EXPECTED THAT THE RECIRCULATING SLURRY SOLIDS COULD BE REALLY CONTROLLED IN THE 5 TO 7 PERCENT RANGE. DUE TO THE MIXED FUEL FIRED AT THE UNIT DURING THE TEST PERIOD, HOWEVER, THE SO2 CONCENTRATIONS EMITTED FROM THE BOILER AND HENCE PRESENT IN THE FLUE GAS STREAM VARIED SIGNIFICANTLY AND FINALLY FELL TO SUCH LOW LEVELS (OFTEN 100-200 PPM) THAT SUSPENDED SOLIDS CONCENTRATIONS IN THE SLURRY COULD NOT BE MAINTAINED. IT IS ALMOST CERTAIN THAT A THICKENER, WITH THE SUBSEQUENT RETURN OF SOLIDS TO THE SCRUBBER LIQUOR, COULD HAVE BEEN USED TO GOOD ADVANTAGE DURING THIS TIME PERIOD. GENERALLY SPEAKING, THE SEVERE SCALING CONDITIONS PLAGUING THE TEST MODULE WERE INTENSIFIED DURING THESE PERIODS OF LOW INLET SO2 CONDITION.

11/74	SYSTEM							720		
12/74	SYSTEM							744		
1/75	SYSTEM							744		
2/75	SYSTEM							672		
3/75	SYSTEM							744		

** PROBLEMS/SOLUTIONS/COMMENTS

THE FGD SCRUBBING SYSTEM WAS OPERATED FOR A TOTAL OF FOUR AND ONE-HALF MONTHS, FROM MID-OCTOBER 1974 TO MARCH 1975. THE OVERALL RELIABILITY OF THE SYSTEM WAS APPROXIMATELY 75%.

4/75	SYSTEM							720		
5/75	SYSTEM							744		
6/75	SYSTEM							720		
7/75	SYSTEM							744		
8/75	SYSTEM							744		
9/75	SYSTEM							720		
10/75	SYSTEM							744		
11/75	SYSTEM							720		
12/75	SYSTEM							744		
1/76	SYSTEM							744		
2/76	SYSTEM							696		
3/76	SYSTEM							744		
4/76	SYSTEM							720		
5/76	SYSTEM									
6/76	SYSTEM							720		

PUBLIC SERVICE OF COLORADO: VALMONT 5 (CONT.)

PERIOD	MODULE	AVAILABILITY	OPERABILITY	RELIABILITY	UTILIZATION	% REMOVAL SO2	% REMOVAL PART.	PER HOURS	BOILER HOURS	FGD HOURS	CAP. FACTOR
		PERFORMANCE DATA									
7/76	SYSTEM							744			
8/76	SYSTEM							744			
9/76	SYSTEM							720			
10/76	SYSTEM							744			
11/76	SYSTEM							720			
12/76	SYSTEM							744			
1/77	SYSTEM							744			
2/77	SYSTEM							672			
3/77	SYSTEM							744			
4/77	SYSTEM							720			
5/77	SYSTEM							744			
6/77	SYSTEM							720			
7/77	SYSTEM							744			
8/77	SYSTEM							744			
9/77	SYSTEM							720			
10/77	SYSTEM							744			
11/77	SYSTEM							720			
12/77	SYSTEM							744			
1/78	SYSTEM							744			
2/78	SYSTEM							672			
3/78	SYSTEM							744			

** PROBLEMS/SOLUTIONS/COMMENTS

THERE HAVE BEEN RECURRING PROBLEMS ASSOCIATED WITH BALL MIGRATION IN THE BALL COMPARTMENT AS WELL AS RECIRCULATION PUMP MOTOR BEARING FAILURE, AND WEAR AND FAILURE IN THE BALL COMPARTMENT LINING. THERE HAVE BEEN CONTINUAL PROBLEMS WITH REHEATER PLUGGING. THERE ALSO HAVE BEEN EXPANSION JOINT FAILURES AT BOTH THE INLET AND OUTLET OF THE SCRUBBER.
MORE RECENTLY THERE WAS A PINCH BELT FAILURE.
THE SCRUBBING SYSTEM HAS HAD AN AVAILABILITY RANGE OF 50 TO 78% WITH AN AVERAGE OF 66%.

4/78	SYSTEM							720			
5/78	SYSTEM							744			

** PROBLEMS/SOLUTIONS/COMMENTS

NO SIGNIFICANT PROBLEMS WERE ENCOUNTERED.

6/78	SYSTEM							720			
7/78	SYSTEM							744			

PUBLIC SERVICE OF COLORADO: VALMONT 5 (CONT.)

PERIOD	MODULE	AVAILABILITY	OPERABILITY	RELIABILITY	UTILIZATION	% REMOVAL SO2	% REMOVAL PART.	PER HOURS	BOILER HOURS	FGD HOURS	CAP. FACTOR
8/78	SYSTEM							744			

** PROBLEMS/SOLUTIONS/COMMENTS

THE UTILITY HAD NO COMMENTS FOR THIS PERIOD.

9/78	SYSTEM							720			
10/78	SYSTEM							744			
11/78	SYSTEM							720			
12/78	SYSTEM							744			
1/79	SYSTEM							744			
2/79	SYSTEM							672			
3/79	SYSTEM							744			
4/79	SYSTEM							720			
5/79	SYSTEM							744			
6/79	SYSTEM							720			

** PROBLEMS/SOLUTIONS/COMMENTS

AVERAGE SCRUBBER AVAILABILITY FROM START UP THROUGH APRIL 1979 WAS 64.42%.
AVERAGE SCRUBBER AVAILABILITY FOR 1978 WAS 66.85%.
AVERAGE SCRUBBER AVAILABILITY FROM JANUARY 1, 1979 THROUGH MAY, 1979 WAS APPROXIMATELY 80%.

BALL MIGRATION, ALTHOUGH NOT SERIOUS, IS A CHRONIC PROBLEM FOR VALMONT 5.

EROSION AND CORROSION HAVE OCCURRED ON THE SCRUBBER GRID BAR AREA (PACKING SUPPORT).

EROSION/CORROSION IS EVIDENT IN THE MIST ELIMINATOR SECTION.

EROSION/CORROSION OCCURRS IN THE REHEATER AREA AND SOOT BLOWER.

THE UTILITY HAD TO REPLACE INLET AND OUTLET EXPANSION JOINTS.

REHEATER PLUGGING HAS BEEN A PROBLEM.

RECYCLE PUMP BEARING FAILURES OCCURRED.

THE JACK SCREW DRIVE HAS BEEN MALFUNCTIONING ON INLET AND OUTLET ISOLATION DAMPERS.

7/79	SYSTEM							744			
8/79	SYSTEM							744			
9/79	SYSTEM							720			

** PROBLEMS/SOLUTIONS/COMMENTS

DURING THE ANNUAL SHUTDOWN IN SEPTEMBER THE OLD SCRUBBER BALLS WERE REPLACED WITH A NEW BRAND. DUE TO BALL MOTION THE RUBBER LINER ERODED.

IN THE MIST ELIMINATOR SECTION EROSION AND CORROSION OCCURRED.

PUBLIC SERVICE OF COLORADO: VALMONT 5 (CONT.)

PERIOD	MODULE	AVAILABILITY	OPERABILITY	RELIABILITY	UTILIZATION	% REMOVAL SO2	% REMOVAL PART.	PER HOURS	BOILER HOURS	FGD HOURS	CAP. FACTOR
10/79	SYSTEM	100.0						744			
11/79	SYSTEM	92.3						720			
12/79	SYSTEM	98.1						744			

** PROBLEMS/SOLUTIONS/COMMENTS

ONE OF THE MAJOR SCRUBBING SYSTEM PROBLEMS IS THE SCRUBBER WALL WEAR WHICH HAS TO BE PATCHED DURING THE SPRING AND FALL.

REHEATER PLUGGING HAS BEEN A CHRONIC PROBLEM.

THE UTILITY HAS REPORTED THE FOLLOWING ANNUAL AVAILABILITIES FOR THE UNIT.
1972 - 1978: 64.3%
1972 - 1979: 65.9%
1978: 66.8%
1979: 80.5%

1/80	A	98.5									
	B	98.5									
	SYSTEM	98.5						744			
2/80	A	84.4									
	B	94.9									
	SYSTEM	89.7						696			
3/80	A	90.8									
	B	87.7									
	SYSTEM	89.0						744	615		

** PROBLEMS/SOLUTIONS/COMMENTS

DURING THE FIRST QUARTER OF 1980, NO MAJOR PROBLEMS WERE ENCOUNTERED WITH THE SCRUBBER.

4/80	A	88.1									
	B	88.1									
	SYSTEM	88.1						720	716		

** PROBLEMS/SOLUTIONS/COMMENTS

THE SCRUBBER WAS SHUT DOWN ON APRIL 14 FOR A WEEK TO MAKE REPAIRS TO A HOLE IN THE SCRUBBER RUBBER LINING, RECYCLE PUMP LININGS AND A STEAM REGULATOR ON ONE OF THE REHEATERS.

5/80	A	96.8									
	B	100.0									
	SYSTEM	98.4						744	744		

** PROBLEMS/SOLUTIONS/COMMENTS

NO PROBLEMS WERE REPORTED FOR MAY.

6/80	A	8.0									
	B	8.0									
	SYSTEM	8.0						720	720		

** PROBLEMS/SOLUTIONS/COMMENTS

DURING JUNE THE SCRUBBER WAS FORCED OUT OF SERVICE WHEN AN INBOARD FAN PEDISTLE BEARING FAILED. THE BEARING SECTION WAS REBUILT.

PUBLIC SERVICE OF COLORADO: VALMONT 5 (CONT.)

PERIOD	MODULE	PERFORMANCE DATA: AVAILABILITY	OPERABILITY	RELIABILITY	UTILIZATION	% REMOVAL SO2	% REMOVAL PART.	PER HOURS	BOILER HOURS	FGD HOURS	CAP. FACTOR
		WHILE FAN REPAIRS WERE IN PROGRESS EXTENSIVE MAINTENANCE WAS PERFORMED ON THE SCRUBBER. MAINTENANCE WORK INCLUDED COMPLETE BALL REPLACEMENT, ADDITIONAL REPAIR WORK ON THE SCRUBBER LINER, REPAIR OF HOLES IN THE TOWER SHELL AND OF A RUPTURED MIST ELIMINATOR WASH LINE AND THE REHEATER WAS CLEANED.									
		DAMPER JAMMING AT VALMONT HAS OCCURRED PERIODICALLY. SOMETIMES DAMPERS DO NOT READILY CLOSE. THE OPERATOR MUST MOVE THE DAMPER UP AND DOWN UNTIL THE GUILLOTINE SEATS. BECAUSE OF CONTINUOUS FLY ASH ACCUMULATION IT APPEARS THAT THE DAMPERS MUST BE EXERCISED FREQUENTLY TO PREVENT JAMMING.									
7/80	5A	48.3		46.6							
	5B	48.3		46.6							
	SYSTEM	48.3		46.6				744	719	347	
	** PROBLEMS/SOLUTIONS/COMMENTS										
		THE SCRUBBER SYSTEM WAS SHUT DOWN BECAUSE OF SCRUBBER BOOSTER FAN BEARING FAILURE.									
8/80	5A	87.5		84.8							
	5B	95.6		92.6							
	SYSTEM	91.5		87.7				744	721	660	
	** PROBLEMS/SOLUTIONS/COMMENTS										
		THE RECIRCULATION PUMP MOTOR BEARING FAILED CAUSING SOME MINOR OUTAGE TIME IN AUGUST.									
9/80	SYSTEM			.0				720	0	0	
	** PROBLEMS/SOLUTIONS/COMMENTS										
		THE BOILER AND SCRUBBER WERE SHUT DOWN DURING SEPTEMBER FOR SCHEDULED MAINTENANCE.									
10/80	SYSTEM							744			
11/80	SYSTEM							720			
12/80	SYSTEM							744			
	** PROBLEMS/SOLUTIONS/COMMENTS										
		THE SCRUBBER REMAINED OUT OF SERVICE THROUGHOUT THE OCTOBER-DECEMBER PERIOD AND IS EXPECTED TO START UP AT THE END OF JANUARY. LATE START UP OF THE SCRUBBER IS DUE TO A MANPOWER SHORTAGE. THE BOILER AND TURBINE RETURNED TO SERVICE IN MID-DECEMBER.									
1/81	SYSTEM							744			
2/81	SYSTEM							672			
3/81	SYSTEM							744			
	** PROBLEMS/SOLUTIONS/COMMENTS										
		SCRUBBER CAME BACK ON-LINE AT THE END OF JANUARY AND OPERATED THROUGHOUT THE MONTHS OF FEBRUARY AND MARCH WITHOUT ANY MAJOR SCRUBBER RELATED PROBLEMS.									

APPENDIX D
DESIGN AND PERFORMANCE DATA FOR OPERATIONAL PARTICLE SCRUBBERS

COMPANY NAME	SOUTHWESTERN PUBLIC SERVICE	
PLANT NAME	HARRINGTON	
UNIT NUMBER	1	
CITY	AMARILLO	
STATE	TEXAS	
REGULATORY CLASSIFICATION	D	
PARTICULATE EMISSION LIMITATION - NG/J	43.	(.100 LB/MMBTU)
SO2 EMISSION LIMITATION - NG/J	516.	(1.200 LB/MMBTU)
NOX EMISSION LIMITATION - NG/J	******	(****** LB/MMBTU)
NET PLANT GENERATING CAPACITY - MW	350	
GROSS UNIT GENERATING CAPACITY - MW	350	
NET UNIT GENERATING CAPACITY W/FGD - MW	320	
NET UNIT GENERATING CAPACITY WO/FGD - MW	*****	
EQUIVALENT SCRUBBED CAPACITY - MW	350	
** UNIT DATA - BOILER AND STACK		
BOILER SUPPLIER	COMBUSTION ENGINEERING	
BOILER TYPE	PULVERIZED COAL	
BOILER SERVICE LOAD	BASE	
DESIGN BOILER FLUE GAS FLOW - CU.M/S	778.63	(1650000 ACFM)
BOILER FLUE GAS TEMPERATURE - C	176.7	(350 F)
STACK HEIGHT - M	76.	(250 FT)
STACK SHELL	CONCRETE	
STACK TOP DIAMETER - M	8.2	(27.0 FT)
** FUEL DATA		
FUEL TYPE	COAL	
FUEL GRADE	SUBBITUMINOUS	
AVERAGE HEAT CONTENT - J/G	20236.	(8700 BTU/LB)
RANGE HEAT CONTENT - BTU/LB		8400-8700
AVERAGE ASH CONTENT - %	5.00	
RANGE ASH CONTENT - %	5.0-5.5	
AVERAGE MOISTURE CONTENT - %	27.10	
RANGE MOISTURE CONTENT - %	25.0-30.0	
AVERAGE SULFUR CONTENT - %	.31	
RANGE SULFUR CONTENT - %	0.3-0.5	
AVERAGE CHLORIDE CONTENT - %	********	
RANGE CHLORIDE CONTENT - %	******	
*** PARTICLE CONTROL		
** ESP		
NUMBER	1	
TYPE	COLD SIDE	
SUPPLIER	RESEARCH-COTTRELL	
INLET FLUE GAS CAPACITY - CU.M/S	778.6	(1650000 ACFM)
INLET FLUE GAS TEMPERATURE - C	168.3	(335 F)
PRESSURE DROP - KPA	.1	(1. IN-H2O)
PARTICLE REMOVAL EFFICENCY - %	95.0	
** PARTICLE SCRUBBER		
NUMBER	6	
NUMBER OF SPARES	1	
GENERIC TYPE	PACKED TOWER	
SPECIFIC TYPE	STATIC BED PACKING	
TRADE NAME/COMMON NAME	MARBLE-BED SCRUBBER	
SUPPLIER	COMBUSTION ENGINEERING	
DIMENSIONS - FT	24.0 X 25.0	
SHELL GENERIC MATERIAL	CARBON STEEL	
SHELL SPECIFIC MATERIAL	AISI 1110	
LINER GENERIC MATERIAL	ORGANIC	
LINER SPECIFIC MATERIAL	NR	
GAS CONTACTING DEVICE TYPE	GLASS MARBLES	
NUMBER OF CONTACTING ZONES	1	
LIQUID RECIRCULATION RATE - LITER/S	444.1	(7050 GPM)
L/G RATIO - LITER/CU.M	3.1	(23.0 GAL/1000ACF)
PH CONTROL ADDITIVE	SLUDGE FROM WATER TREATMENT	
SUPERFICIAL GAS VELOCITY - M/S	2.4	(8.0 FT/S)
INLET GAS FLOW RATE - CU.M/S	141.6	(300000 ACFM)

SOUTHWESTERN PUBLIC SERVICE: HARRINGTON 1 (CONT.)

INLET GAS TEMPERATURE - C	60.0	(140 F)
PARTICLE REMOVAL EFFICIENCY - %	50.0	

PERFORMANCE DATA

PERIOD	MODULE	AVAILABILITY	OPERABILITY	RELIABILITY	UTILIZATION	% REMOVAL SO2	% REMOVAL PART.	PER HOURS	BOILER HOURS	FGD HOURS	CAP. FACTOR
10/79	SYSTEM							744			
11/79	SYSTEM							720			
12/79	SYSTEM							744			

** PROBLEMS/SOLUTIONS/COMMENTS

DURING OCTOBER THROUGH DECEMBER, TWO SPRAY PUMP MOTORS FAILED.

THE FRP FLUSH PIPING HAS FAILED CAUSING SOME LEAKING.

PLUGGING IN ONE MARBLE BED WAS ENCOUNTERED WHEN THE CHEMISTRY CONTROL WAS TEMPORARILY LOST.

THE CONE SHAPED EXPANDED METAL (316L SS) SCREENS COVERING THE BED DRAIN PIPES HAVE ERODED AWAY FROM BALL MOVEMENT. THE MARBLE BALLS HAVE BEEN DROPPING INTO THE RECYCLE TANK. WHERE THE UTILITY HAS REPLACED THE METAL SCREEN WITH EXPANDED PLASTIC SCREEN, EROSION HAS NOT OCCURRED.

1/80	SYSTEM							744			
2/80	SYSTEM							696			
3/80	SYSTEM							744			

** PROBLEMS/SOLUTIONS/COMMENTS

DURING THE FIRST QUARTER OF 1980 THE MIST ELIMINATOR WASH PIPING RUPTURED CAUSING PLUGGING IN SCRUBBERS 4 AND 5. THE UTILITY PLANS TO REPLACE ALL FRP PIPING WITH STEEL. THE RUPTURE ON NO. 5 ALSO DAMAGED THE WATER SUPPLY HEADER.

THE MARBLE BED PLUGGING REPORTED DURING THE LAST QUARTER IS NOT YET COMPLETELY CLEARED. THE SOFT SCALE IS GRADUALLY GOING BACK INTO THE SOLUTION. THE PLATE AREA IS CLEAN.

THE DUCT BENEATH THE REHEATER TUBING ON ONE OF THE MODULES HAS CORRODED TO THE POINT THAT HOLES HAVE FORMED. SCALE AND MOISTURE WERE FOUND ON THE PLATE WHERE THE CORROSION FORMED. THE PLATE WAS REMOVED AND A NEW CARBON STEEL PLATE WAS WELDED IN. NO OTHER REHEATER DUCTS HAVE EXPERIENCED ANY SCALE OR MOISTURE ACCUMULATION.

4/80	SYSTEM							720			

** PROBLEMS/SOLUTIONS/COMMENTS

A PUMP LINER FAILURE OCCURRED IN APRIL. THE IMPELLER SHAFT LINER WAS REPAIRED AND REPLACED.

5/80	SYSTEM							744			

** PROBLEMS/SOLUTIONS/COMMENTS

THE BOILER WAS SHUT DOWN A FEW DAYS IN LATE APRIL AND 12 TO 14 DAYS IN EARLY MAY FOR AIR PREHEATER REPAIRS.

DURING APRIL AND MAY THE SCRUBBING SYSTEM EXPERIENCED AGITATOR PROBLEMS. THE RECENT PROBLEMS HAVE BEEN RELATED TO BEARING FAILURE, HOWEVER, THE SEALS HAVE BEEN LEAKING AS WELL. THE AGITATORS AT THIS FACILITY ARE SIDE MOUNTED. THE AGITATOR SHAFT ENTERS THE TANK AT ROUGHLY 12 FT BELOW THE

SOUTHWESTERN PUBLIC SERVICE: HARRINGTON 1 (CONT.)

PERFORMANCE DATA

PERIOD	MODULE	AVAILABILITY	OPERABILITY	RELIABILITY	UTILIZATION	% REMOVAL SO2	% REMOVAL PART.	PER HOURS	BOILER HOURS	FGD HOURS	CAP. FACTOR

FLUID SURFACE. IT APPEARS THAT THE SEAL LEAKING MAY BE ATTRIBUTABLE TO FAULTY INSTALLATION.

6/80	SYSTEM	92.1						720	696		79.3

** PROBLEMS/SOLUTIONS/COMMENTS

DURING JUNE THE SCRUBBER EXHIBITED AN AVAILABILITY OF 92.1%. THERE WAS GREATER SCRUBBER CAPACITY AVAILABLE THAN REQUIRED BY THE BOILER. NO PROBLEMS WERE REPORTED FOR JUNE.

DAMPER PROBLEMS REPORTED PREVIOUSLY HAVE BEEN ELIMINATED. THE OLD OPERATOR MECHANISMS WERE REPLACED WITH OPERATORS SUPPLIED BY ANOTHER MANUFACTURER.

ONE OF THE MARBLE BEDS IS STILL PARTIALLY PLUGGED. THE MATERIAL SEEMS TO BE HARD CALCIUM SULFATE SCALE. THE SCALE WILL PROBABLY NOT CLEAR FURTHER THROUGH DISSOLUTION DURING NORMAL SCRUBBER OPERATIONS AS HAD BEEN HOPED. ALTHOUGH THE MODULE MUST OPERATE AT LOWER THAN DESIGN GAS FLOW SCRUBBER OPERATIONS ARE NOT HAMPERED OVERALL BECAUSE THE SYSTEM HAS SOME DESIGN SPARE CAPACITY.

THE REHEATER PROBLEM REPORTED PREVIOUSLY HAS OCCURRED ON THREE REHEATERS NOW. THE FAILURE OF THE REHEATER DUCT BOTTOM PANELS MAY BE A RESULT OF AN UNDERSIZED DEFLECTION SHIELD BENEATH THE TUBE BANKS. IT IS ALSO POSSIBLE THAT THE DUCTING WAS IMPROPERLY WELDED.

7/80	SYSTEM							744			
8/80	SYSTEM							744			
9/80	SYSTEM							720			

** PROBLEMS/SOLUTIONS/COMMENTS

THE UTILITY REPORTED THAT NO MAJOR SCRUBBING SYSTEM PROBLEMS OCCURRED DURING THE THIRD QUARTER 1980.

THE PROBLEM REPORTED EARLIER WITH THE MIST ELIMINATOR WASH PIPING IS PRESENTLY BEING SOLVED BY REPLACING THE PIPING WITH CARBON STEEL.

10/80	SYSTEM							744			
11/80	SYSTEM							720			
12/80	SYSTEM							744			

** PROBLEMS/SOLUTIONS/COMMENTS

DURING THE OCTOBER THROUGH DECEMBER PERIOD REPLACEMENT OF THE MIST ELIMINATOR WASH PIPING WITH CARBON STEEL CONTINUED; AS THE OLD PIPING WEARS OUT AND MAINTENANCE TIME PERMITS.

DURING LATE DECEMBER, THE SLURRY SPRAY PUMP HOUSING CRACKED DURING A BACK FLUSH. THIS WAS THE SECOND TIME IN TWO YEARS THAT THIS PROBLEM HAD OCCURRED.

1/81	SYSTEM							744			

** PROBLEMS/SOLUTIONS/COMMENTS

THE UTILITY REPORTED THAT AT THE BEGINNING OF THE YEAR THE SCRUBBER SYSTEM BEGAN TO SEE VOLUMES OF FLUE GAS GREATER THAN THAT PRODUCED BY THE BOILER. IT WAS LATER DISCOVERED THAT THE EXPANSION JOINTS LOCATED AT THE ESP HAD CRACKED AND WERE ALLOWING AMBIENT AIR TO ENTER THE SYSTEM. THE UTILITY

SOUTHWESTERN PUBLIC SERVICE: HARRINGTON 1 (CONT.)

PERIOD	MODULE	AVAILABILITY	OPERABILITY	RELIABILITY	UTILIZATION	% REMOVAL SO2	% REMOVAL PART.	PERFORMANCE DATA PER HOURS	BOILER HOURS	FGD HOURS	CAP. FACTOR

REPORTED THEY HAD ORIGINALLY ORDERED VITRON EXPANSION JOINTS BUT INSTEAD RECEIVED CHLOROBUTYL JOINTS WHICH SUBSEQUENTLY FAILED. DUE TO THE INCREASED GAS LOAD THE UTILITY HAS HAD TO RUN MORE MODULES THAN NORMALLY NECESSARY FOR A GIVEN BOILER LOAD. THE UTILITY PLANS TO REPLACE THE EXPANSION JOINTS DURING THE NEXT SCHEDULED OUTAGE IN MAY.

2/81	SYSTEM							672			
3/81	SYSTEM							744			

** PROBLEMS/SOLUTIONS/COMMENTS

MODULE 3 WAS SHUT DOWN FOR 24 HOURS TO REPLACE A RUBBER PUMP LINER WHICH HAD BEEN WORN AWAY BY THE PUMP IMPELLERS.

EXCEPT FOR THE PUMP LINER AND EXPANSION JOINT FAILURES THE SCRUBBER SYSTEM OPERATED WELL THROUGHOUT THE JANUARY-MARCH PERIOD.

APPENDIX E
DESIGN AND PERFORMANCE DATA FOR OPERATIONAL FOREIGN FGD SYSTEMS

COMPANY NAME	CHUGOKU ELECTRIC	
PLANT NAME	SHIMONOSEKI	
UNIT NUMBER	1	
CITY	SHIMONOSEKI	
COUNTRY	JAPAN	
REGULATORY CLASSIFICATION	******	
PARTICULATE EMISSION LIMITATION - NG/J	******	(****** LB/MMBTU)
SO2 EMISSION LIMITATION - NG/J	219.	(.510 LB/MMBTU)
NOX EMISSION LIMITATION - NG/J	******	(****** LB/MMBTU)
NET PLANT GENERATING CAPACITY - MW	575	
GROSS UNIT GENERATING CAPACITY - MW	175	
NET UNIT GENERATING CAPACITY W/FGD - MW	*****	
NET UNIT GENERATING CAPACITY WO/FGD - MW	*****	
EQUIVALENT SCRUBBED CAPACITY - MW	175	
** UNIT DATA - BOILER AND STACK		
BOILER SUPPLIER	MITSUBISHI	
BOILER TYPE	PULVERIZED COAL	
BOILER SERVICE LOAD	BASE	
DESIGN BOILER FLUE GAS FLOW - CU.M/S	266.27	(564255 ACFM)
BOILER FLUE GAS TEMPERATURE - C	130.0	(266 F)
STACK HEIGHT - M	200.	(656 FT)
STACK SHELL	CONCRETE	
STACK TOP DIAMETER - M	3.0	(9.7 FT)
** FUEL DATA		
FUEL TYPE	COAL	
FUEL GRADE	******	
AVERAGE HEAT CONTENT - J/G	25046.	(10768 BTU/LB)
RANGE HEAT CONTENT - BTU/LB		******
AVERAGE ASH CONTENT - %	24.60	
RANGE ASH CONTENT - %	******	
AVERAGE MOISTURE CONTENT - %	2.30	
RANGE MOISTURE CONTENT - %	******	
AVERAGE SULFUR CONTENT - %	.59	
RANGE SULFUR CONTENT - %	******	
AVERAGE CHLORIDE CONTENT - %	.04	
RANGE CHLORIDE CONTENT - %	0.01-0.11	
*** PARTICLE CONTROL		
** MECHANICAL COLLECTOR		
TYPE	MULTICLONE	
SUPPLIER	MITSUBISHI	
** FABRIC FILTER		
NUMBER	0	
TYPE	NONE	
** ESP		
NUMBER	1	
TYPE	COLD SIDE	
SUPPLIER	MITSUBISHI HEAVY INDUSTRIES	
INLET FLUE GAS CAPACITY - CU.M/S	246.1	(521589 ACFM)
INLET FLUE GAS TEMPERATURE - C	140.0	(284 F)
PRESSURE DROP - KPA	.8	(3. IN-H2O)
** PARTICLE SCRUBBER		
NUMBER	1	
GENERIC TYPE	SPRAY TOWER	
SPECIFIC TYPE	NR	
TRADE NAME/COMMON NAME	NR	
SUPPLIER	MITSUBISHI	
SHELL GENERIC MATERIAL	CARBON STEEL	
SHELL SPECIFIC MATERIAL	AISI 1110	
LINER GENERIC MATERIAL	ORGANIC	
LINER SPECIFIC MATERIAL	SYNTHETIC RUBBER	
GAS CONTACTING DEVICE TYPE	NONE	
NUMBER OF CONTACTING ZONES	1	

CHUGOKU ELECTRIC: SHIMONOSEKI 1 (CONT.)

LIQUID RECIRCULATION RATE - LITER/S	544.3	(8640 GPM)
L/G RATIO - LITER/CU.M	3.0	(22.5 GAL/1000ACF)
SUPERFICIAL GAS VELOCITY - M/S	13.1	(43.0 FT/S)
INLET GAS FLOW RATE - CU.M/S	203.7	(431725 ACFM)

*** FGD SYSTEM

** GENERAL DATA

SALEABLE PRODUCT/THROWAWAY PRODUCT	SALEABLE PRODUCT
SO2 REMOVAL MODE	WET SCRUBBING
PROCESS TYPE	LIMESTONE
PROCESS ADDITIVES	NONE
SYSTEM SUPPLIER	MITSUBISHI HEAVY INDUSTRIES
A-E FIRM	MITSUBISHI
DEVELOPMENT LEVEL	FULL SCALE
NEW/RETROFIT	RETROFIT
UNIT DESIGN SO2 REMOVAL EFFICIENCY - %	85.00
CURRENT STATUS	1
COMMERCIAL START-UP	7/79
INITIAL START-UP	5/79
CONTRACT AWARDED	5/77

** DESIGN AND OPERATING PARAMETERS

** QUENCHER/PRESATURATOR

CONSTRUCTION MATERIAL GENERIC TYPE	NR
CONSTRUCTION MATERIAL SPECIFIC TYPE	NR

** ABSORBER

NUMBER	1	
NUMBER OF SPARES	0	
GENERIC TYPE	COMBINATION TOWER	
SPECIFIC TYPE	NR	
TRADE NAME/COMMON TYPE	N/A	
SUPPLIER	MITSUBISHI	
SHELL GENERIC MATERIAL	CARBON STEEL	
SHELL SPECIFIC MATERIAL	AISI 1110	
SHELL MATERIAL TRADE NAME/COMMON TYPE	N/A	
LINER GENERIC MATERIAL	ORGANIC	
LINER SPECIFIC MATERIAL	NR	
LINER MATERIAL TRADE NAME/COMMON TYPE	NR	
NUMBER OF CONTACTING ZONES	4	
LIQUID RECIRCULATION RATE - LITER/S	2722.	(43200 GPM)
GAS-SIDE PRESSURE DROP - KPA	1.0	(3.9 IN-H2O)
SUPERFICAL GAS VELOCITY - M/SEC	3.0	(9.8 FT/S)
INLET GAS FLOW - CU. M/S	203.73	(431725 ACFM)
INLET GAS TEMPERATURE - C	50.0	(122 F)
SO2 REMOVAL EFFICIENCY - %	89.0	
PARTICLE REMOVAL EFFICENCY - %	90.0	

** MIST ELIMINATOR

PRE-MIST ELIMINATOR/MIST ELIMINATOR	PRIMARY COLLECTOR	
GENERIC TYPE	IMPINGEMENT	
SPECIFIC TYPE	BAFFLE	
TRADE NAME/COMMON TYPE	CLOSED VANE	
NUMBER OF STAGES	2	
PRESSURE DROP - KPA	.1	(.6 IN-H2O)
CONSTRUCTION MATERIAL GENERIC TYPE	NR	
CONSTRUCTION MATERIAL SPECIFIC TYPE	NR	
WASH WATER SOURCE	FRESH	
WASH RATE - L/S	200.0	(3170 GAL/MIN)

** REHEATER

GENERIC TYPE	WASTE HEAT RECOVERY	
SPECIFIC TYPE	NR	
TRADE NAME/COMMON TYPE	NR	
TEMPERATURE INCREASE - C	157.8	(284 F)
INLET FLUE GAS FLOW RATE - CU. M/S	203.73	(431725 ACFM)
INLET FLUE GAS TEMPERATURE - C	105.0	(221 F)
CONSTRUCTION MATERIAL GENERIC TYPE	NR	
CONSTRUCTION MATERIAL SPECIFIC TYPE	NR	

CHUGOKU ELECTRIC: SHIMONOSEKI 1 (CONT.)

** FANS	
DESIGN	NR
SUPPLIER	MITSUBISHI HEAVY INDUSTRIES
FUNCTION	NR
APPLICATION	NR
SERVICE	NR
FLUE GAS FLOW RATE - CU.M/S	294.04 (623108 ACFM)
FLUE GAS TEMPERATURE - C	140.0 (284 F)
CONSTRUCTION MATERIAL GENERIC TYPE	NR
** DAMPERS	
FUNCTION	NR
GENERIC TYPE	NR
SPECIFIC TYPE	NR
CONSTRUCTION MATERIAL GENERIC TYPE	NR
CONSTRUCTION MATERIAL SPECIFIC TYPE	NR
LINER GENERIC MATERIAL TYPE	NR
LINER SPECIFIC MATERIAL TYPE	NR
** REAGENT PREPARATION EQUIPMENT	
FUNCTION	WET BALL MILL
DEVICE	NR
DEVICE TYPE	NR
** TANKS	
SERVICE	NUMBER
-------	------
NR	****
** PUMPS	
SERVICE	NUMBER
-------	------
NR	****
** SOLIDS CONCENTRATING/DEWATERING	
DEVICE	CENTRIFUGE
NUMBER	5
NUMBER OF SPARES	0
FEED STREAM CHARACTERISTICS	25% SOLIDS
OUTLET STREAM CHARACTERISTICS	90% SOLIDS
** SOLIDS CONCENTRATING/DEWATERING	
DEVICE	THICKENER
NUMBER	1
NUMBER OF SPARES	0
DIMENSIONS - FT	33.0 DIA X 10.0
FEED STREAM CHARACTERISTICS	5% SOLIDS
OUTLET STREAM CHARACTERISTICS	25% SOLIDS
*** SALEABLE BYPRODUCTS	
NATURE	GYPSUM
FULL LOAD QUANTITY - M T/H	6.98 (7.70 TPH)
QUALITY - %	99.0
*** SLUDGE	
** TREATMENT	
METHOD	NR
DEVICE	NR
PROPRIETARY PROCESS	NR
** DISPOSAL	
NATURE	NR
TYPE	NR
SITE TREATMENT	NR

UTILITY FGD SURVEY: OCTOBER 1983 - SEPTEMBER 1984

CHUGOKU ELECTRIC: SHIMONOSEKI 1 (CONT.)

** WATER BALANCE

WATER LOOP TYPE	OPEN	
EVAPORATION WATER LOSS - LITER/S	3.0	(47 GPM)
POND SEEPAGE/RUNOFF WATER LOSS - LITERS/S	54	
MAKEUP WATER ADDITION - LITERS/S	6.8	(108 GPM)

PERFORMANCE DATA

PERIOD	MODULE	AVAILABILITY	OPERABILITY	RELIABILITY	UTILIZATION	% REMOVAL SO2	% REMOVAL PART.	PER HOURS	BOILER HOURS	FGD HOURS	CAP. FACTOR
7/79	SYSTEM	100.0	100.0	100.0	50.0			744	372	372	
8/79	SYSTEM	100.0	100.0	100.0	100.0			744	744	744	
9/79	SYSTEM	100.0	100.0	100.0	100.0			720	720	720	

** PROBLEMS/SOLUTIONS/COMMENTS

COMMERCIAL OPERATIONS BEGAN IN THE MIDDLE OF JULY 1979. THE FGD UNIT HAS OPERATED CONTINUOUSLY THROUGH THE THIRD QUARTER WITH NO PROBLEMS.

10/79	SYSTEM	100.0	100.0	100.0	100.0			744	744	744	
11/79	SYSTEM	100.0	100.0	100.0	100.0			720	720	720	
12/79	SYSTEM	100.0	93.5	100.0	93.5			744	744	696	

** PROBLEMS/SOLUTIONS/COMMENTS

THE FGD UNIT OPERATED CONTINUOUSLY THROUGH THE FOURTH QUARTER EXCEPT FOR A 2 DAY SHUTDOWN TO INSPECT THE GAS-GAS HEATER DURING DECEMBER. THE BOILER WAS OPERATED FIRING A LOW SULFUR OIL DURING THE TWO DAYS.

1/80	SYSTEM	100.0	100.0	100.0	100.0			744	744	744	
2/80	SYSTEM	100.0	100.0	100.0	53.4			696	372	372	

** PROBLEMS/SOLUTIONS/COMMENTS

DURING JANUARY AND THE FIRST HALF OF FEBRUARY THE FGD UNIT OPERATED WITH NO PROBLEMS. THE BOILER WAS TAKEN OFF-LINE ON FEBRUARY 8 FOR SCHEDULED MAINTENANCE.

3/80	SYSTEM	100.0			.0			744	0	0	

** PROBLEMS/SOLUTIONS/COMMENTS

THE BOILER REMAINED DOWN THROUGH MARCH FOR ANNUAL MAINTENANCE.

4/80	SYSTEM	100.0	100.0	100.0	182.4			720	593	593	

** PROBLEMS/SOLUTIONS/COMMENTS

DURING THE ANNUAL MAINTENANCE THE SCR (SELECTIVE CATALYTIC REDUCTION OF NOX) UNIT WAS CONNECTED BETWEEN THE BOILER AND AIR PREHEATER. AFTER THE STARTUP ON APRIL 6, COAL ONLY HAS BEEN USED (BEFORE FEBRUARY, COAL AND OIL WERE USED 50:50). EXCEPT FOR A 2 HOUR SHUTDOWN FOR A TURBINE TEST ON APRIL 7, THE FGD SYSTEM HAS OPERATED CONTINUOUSLY WITH NO PROBLEMS.

5/80	SYSTEM	100.0	100.0	100.0	90.3			744	672	672	

** PROBLEMS/SOLUTIONS/COMMENTS

THE FGD SYSTEM OPERATED CONTINOUSLY WITH NO PROBLEMS. A THREE DAY SHUTDOWN FOR INSPECTION OF THE SCR UNIT FROM MAY 16 TO MAY 19 WAS THE ONLY DOWN TIME EXPERIENCED DURING MAY.

6/80	SYSTEM	100.0	100.0	100.0	100.0			720	720	720	99.4

CHUGOKU ELECTRIC: SHIMONOSEKI 1 (CONT.)

PERIOD	MODULE	AVAILABILITY	OPERABILITY	RELIABILITY	UTILIZATION	% REMOVAL SO2	% REMOVAL PART.	PER HOURS	BOILER HOURS	FGD HOURS	CAP. FACTOR
	** PROBLEMS/SOLUTIONS/COMMENTS										
		THE FGD SYSTEM OPERATED CONTINOUSLY WITH NO PROBLEMS DURING JUNE.									
7/80	SYSTEM	100.0	100.0	100.0	100.0			744	744	744	98.9
	** PROBLEMS/SOLUTIONS/COMMENTS										
		THE FGD SYSTEM OPERATED DURING JULY WITH NO PROBLEMS.									
8/80	SYSTEM	88.7	88.7	88.7	88.7			744	744	660	99.5
	** PROBLEMS/SOLUTIONS/COMMENTS										
		DURING AUGUST THE FGD SYSTEM WAS SHUT DOWN FOR 84 HOURS DUE TO SOME PLUGGING IN THE REHEATER. DURING THIS TIME THE REHEATER WAS WATER WASHED AND THE SOOT BLOWER SYSTEM WAS IMPROVED.									
9/80	SYSTEM	89.0	89.0	89.0	89.0			720	720	641	97.3
	** PROBLEMS/SOLUTIONS/COMMENTS										
		DURING SEPTEMBER PROBLEMS WITH PLUGGING IN THE REHEATER RECURRED. THE TROUBLE WAS CAUSED BY ESP PROBLEMS, BY WHICH A LARGE AMOUNT OF FLYASH WENT INTO THE REHEATER.									
10/80	SYSTEM	100.0	97.4	100.0	88.0			744	673	655	88.5
	** PROBLEMS/SOLUTIONS/COMMENTS										
		DURING OCTOBER THE BOILER WAS TAKEN OFF LINE FOR THREE DAYS FOR AN INSPECTION OF THE NOX REMOVAL SYSTEM.									
11/80	SYSTEM	100.0	100.0	100.0	100.0			720	720	720	99.4
12/80	SYSTEM	100.0	100.0	100.0	100.0			744	744	744	99.6
	** PROBLEMS/SOLUTIONS/COMMENTS										
		NO PROBLEMS WERE ENCOUNTERED DURING THE MONTHS OF NOVEMBER AND DECEMBER.									
1/81	SYSTEM							744			
2/81	SYSTEM							672			
3/81	SYSTEM							744			
	** PROBLEMS/SOLUTIONS/COMMENTS										
		THE FIRST QUARTER 1981 DATA IS NOT AVAILABLE AT THIS TIME; HOWEVER THE DATA WILL BE AVAILABLE IN THE SECOND QUARTER 1981 REPORT.									

APPENDIX E
DESIGN AND PERFORMANCE DATA FOR OPERATIONAL FOREIGN FGD SYSTEMS

COMPANY NAME	ELECTRIC POWER DEVELOPMENT	
PLANT NAME	ISOGO	
UNIT NUMBER	1	
CITY	YOKOHAMA	
COUNTRY	JAPAN	
REGULATORY CLASSIFICATION	******	
PARTICULATE EMISSION LIMITATION - NG/J	20.	(.046 LB/MMBTU)
SO2 EMISSION LIMITATION - NG/J	58.	(.135 LB/MMBTU)
NOX EMISSION LIMITATION - NG/J	******	(****** LB/MMBTU)
NET PLANT GENERATING CAPACITY - MW	238	
GROSS UNIT GENERATING CAPACITY - MW	265	
NET UNIT GENERATING CAPACITY W/FGD - MW	238	
NET UNIT GENERATING CAPACITY WO/FGD - MW	*****	
EQUIVALENT SCRUBBED CAPACITY - MW	265	
** UNIT DATA - BOILER AND STACK		
BOILER SUPPLIER	IHI	
BOILER TYPE	PULVERIZED COAL	
BOILER SERVICE LOAD	BASE	
DESIGN BOILER FLUE GAS FLOW - CU.M/S	405.36	(859000 ACFM)
BOILER FLUE GAS TEMPERATURE - C	170.0	(338 F)
STACK HEIGHT - M	122.	(400 FT)
STACK SHELL	CARBON STEEL	
STACK TOP DIAMETER - M	3.7	(12.0 FT)
** FUEL DATA		
FUEL TYPE	COAL	
FUEL GRADE	******	
AVERAGE HEAT CONTENT - J/G	25958.	(11160 BTU/LB)
RANGE HEAT CONTENT - BTU/LB		11160-11520
AVERAGE ASH CONTENT - %	16.00	
RANGE ASH CONTENT - %	15.0-17.0	
AVERAGE MOISTURE CONTENT - %	7.00	
RANGE MOISTURE CONTENT - %	6.0-8.0	
AVERAGE SULFUR CONTENT - %	.60	
RANGE SULFUR CONTENT - %	0.2-0.6	
AVERAGE CHLORIDE CONTENT - %	********	
RANGE CHLORIDE CONTENT - %	******	
*** PARTICLE CONTROL		
** MECHANICAL COLLECTOR		
NUMBER	0	
TYPE	NONE	
** ESP		
NUMBER	2	
TYPE	COLD SIDE	
SUPPLIER	TOYO ENGINEERING	
INLET FLUE GAS CAPACITY - CU.M/S	353.2	(748362 ACFM)
INLET FLUE GAS TEMPERATURE - C	150.0	(302 F)
PARTICLE REMOVAL EFFICENCY - %	98.0	
** PARTICLE SCRUBBER		
NUMBER	1	
NUMBER OF SPARES	0	
GENERIC TYPE	VENTURI TOWER	
SPECIFIC TYPE	NR	
TRADE NAME/COMMON NAME	NR	
SUPPLIER	IHI-CHEMICO	
DIMENSIONS - FT	43.6 DIA X 101.4	
SHELL GENERIC MATERIAL	CARBON STEEL	
SHELL SPECIFIC MATERIAL	AISI 1110	
LINER GENERIC MATERIAL	ORGANIC	
LINER SPECIFIC MATERIAL	GLASS FLAKE-FILLED POLYESTER	
GAS CONTACTING DEVICE TYPE	NONE	
NUMBER OF CONTACTING ZONES	1	
LIQUID RECIRCULATION RATE - LITER/S	2194.1	(34827 GPM)
L/G RATIO - LITER/CU.M	9.4	(70.0 GAL/1000ACF)

ELECTRIC POWER DEVELOPMENT: ISOGO 1 (CONT.)

PRESSURE DROP - KPA	1.5	(5.9 IN-H2O)
SUPERFICIAL GAS VELOCITY - M/S	3.0	(10.0 FT/S)
INLET GAS FLOW RATE - CU.M/S	424.6	(899864 ACFM)
INLET GAS TEMPERATURE - C	170.0	(338 F)

*** FGD SYSTEM

** GENERAL DATA

SALEABLE PRODUCT/THROWAWAY PRODUCT	SALEABLE PRODUCT
SO2 REMOVAL MODE	WET SCRUBBING
PROCESS TYPE	LIMESTONE
SYSTEM SUPPLIER	IHI-CHEMICO
DEVELOPMENT LEVEL	FULL SCALE
NEW/RETROFIT	RETROFIT
UNIT DESIGN PARTICLE REMOVAL EFFICIENCY - %	97.00
UNIT DESIGN SO2 REMOVAL EFFICIENCY - %	95.00
CURRENT STATUS	1
COMMERCIAL START-UP	3/76
INITIAL START-UP	12/75

** DESIGN AND OPERATING PARAMETERS

** QUENCHER/PRESATURATOR

CONSTRUCTION MATERIAL GENERIC TYPE	NR
CONSTRUCTION MATERIAL SPECIFIC TYPE	NR

** ABSORBER

NUMBER	1	
NUMBER OF SPARES	0	
GENERIC TYPE	VENTURI TOWER	
SPECIFIC TYPE	NR	
TRADE NAME/COMMON TYPE	NR	
SUPPLIER	IHI/CHEMICO	
DIMENSIONS - FT	43.5 DIA X 76.8	
SHELL GENERIC MATERIAL	CARBON STEEL	
SHELL SPECIFIC MATERIAL	NR	
SHELL MATERIAL TRADE NAME/COMMON TYPE	N/A	
LINER GENERIC MATERIAL	ORGANIC	
LINER SPECIFIC MATERIAL	GLASS FLAKE-FILLED POLYESTER	
LINER MATERIAL TRADE NAME/COMMON TYPE	NR	
GAS CONTACTING DEVICE TYPE	NONE	
NUMBER OF CONTACTING ZONES	1	
LIQUID RECIRCULATION RATE - LITER/S	2194.	(34827 GPM)
L/G RATIO - L/CU.M	9.4	(70.0 GAL/1000 ACF)
GAS-SIDE PRESSURE DROP - KPA	1.5	(5.9 IN-H2O)
SUPERFICAL GAS VELOCITY - M/SEC	3.0	(10.0 FT/S)
INLET GAS FLOW - CU. M/S	566.28	(1200000 ACFM)
INLET GAS TEMPERATURE - C	55.0	(131 F)
PARTICLE REMOVAL EFFICENCY - %	96.7	

** MIST ELIMINATOR

PRE-MIST ELIMINATOR/MIST ELIMINATOR	PRIMARY COLLECTOR	
GENERIC TYPE	IMPINGEMENT	
SPECIFIC TYPE	BAFFLE	
TRADE NAME/COMMON TYPE	CLOSED VANE	
CONFIGURATION	HORIZONTAL	
NUMBER OF STAGES	4	
NUMBER OF PASSES PER STAGE	4	
PRESSURE DROP - KPA	.5	(2.0 IN-H2O)
SUPERFICAL GAS VELOCITY - M/S	3.0	(9.8 FT/S)
CONSTRUCTION MATERIAL GENERIC TYPE	ORGANIC	
CONSTRUCTION MATERIAL SPECIFIC TYPE	NR	
WASH FREQUENCY	INTERMITTENT	

** REHEATER

GENERIC TYPE	DIRECT COMBUSTION	
SPECIFIC TYPE	NR	
TRADE NAME/COMMON TYPE	OIL	
TEMPERATURE INCREASE - C	83.9	(151 F)
INLET FLUE GAS TEMPERATURE - C	120.0	(248 F)
CONSTRUCTION MATERIAL GENERIC TYPE	NR	

ELECTRIC POWER DEVELOPMENT: ISOGO 1 (CONT.)

CONSTRUCTION MATERIAL SPECIFIC TYPE	NR	
** FANS		
NUMBER	2	
NUMBER OF SPARES	0	
DESIGN	NR	
FUNCTION	BOOSTER	
APPLICATION	NR	
SERVICE	NR	
FLUE GAS FLOW RATE - CU.M/S	362.14	(767400 ACFM)
FLUE GAS TEMPERATURE - C	170.0	(338 F)
CONSTRUCTION MATERIAL GENERIC TYPE	NR	
** DAMPERS		
FUNCTION	NR	
GENERIC TYPE	NR	
SPECIFIC TYPE	NR	
CONSTRUCTION MATERIAL GENERIC TYPE	NR	
CONSTPUCTION MATERIAL SPECIFIC TYPE	NR	
LINER GENERIC MATERIAL TYPE	NR	
LINER SPECIFIC MATERIAL TYPE	NR	
** REAGENT PREPARATION EQUIPMENT		
FUNCTION	WET BALL MILL	
DEVICE	NR	
DEVICE TYPE	NR	
** TANKS		
SERVICE	NUMBER	
-------	------	
WASTE SLURRY BLEED	1	
ABSORBER RECYCLE	****	
REAGENT PREP PRODUCT	1	
THICKENER OVERFLOW	1	
VACUUM FILTER FILTRATE	1	
SPARGER/OXIDIZER	1	
** PUMPS		
SERVICE	NUMBER	
-------	------	
SLURRY MAKEUP	3	
ABSORBER RECIRCULATION	8	
OXIDATION TOWER SUPPLY TRANSFER	2	
FILTRATE	2	
** SOLIDS CONCENTRATING/DEWATERING		
DEVICE	CENTRIFUGE	
NUMBER	4	
NUMBER OF SPARES	1	
FEED STREAM CHARACTERISTICS	18.5% SOLIDS	
OUTLET STREAM CHARACTERISTICS	90% SOLIDS	
** SOLIDS CONCENTRATING/DEWATERING		
DEVICE	THICKENER	
NUMBER	1	
NUMBER OF SPARES	0	
DIMENSIONS - FT	20.0 DIA X 10.0	
FEED STREAM CHARACTERISTICS	8.5% SOLIDS	
OUTLET STREAM CHARACTERISTICS	18.6% SOLIDS	
*** SALEABLE BYPRODUCTS		
NATURE	GYPSUM	
FULL LOAD QUANTITY - M T/H	4.53	(5.00 TPH)
DISPOSITION	MARKETED	
*** SLUDGE		

ELECTRIC POWER DEVELOPMENT: ISOGO 1 (CONT.)

** TREATMENT

METHOD	FORCED OXIDATION
DEVICE	OXIDATION TANK
PROPRIETARY PROCESS	N/A

** DISPOSAL

NATURE	NR
TYPE	NR
SITE TREATMENT	NR

** PROCESS CONTROL AND INSTRUMENTATION

CHEMICAL PARAMETERS	PH
PROCESS CONTROL MANNER	AUTOMATIC
PROCESS CHEMISTRY MODE	FEEDBACK

** WATER BALANCE

WATER LOOP TYPE	OPEN
POND SEEPAGE/RUNOFF WATER LOSS - LITERS/S	40
MAKEUP WATER ADDITION - LITERS/S	22.3 (354 GPM)

PERFORMANCE DATA

PERIOD	MODULE	AVAILABILITY	OPERABILITY	RELIABILITY	UTILIZATION	% REMOVAL SO2	% REMOVAL PART.	PER HOURS	BOILER HOURS	FGD HOURS	CAP. FACTOR
4/78	SYSTEM							720			
5/78	SYSTEM							744			
6/78	SYSTEM							720			
7/78	SYSTEM							744			
8/78	SYSTEM							744			
9/78	SYSTEM							720			
10/78	SYSTEM							744			
11/78	SYSTEM							720			
12/78	SYSTEM							744			
1/79	SYSTEM							744			
2/79	SYSTEM							672			
3/79	SYSTEM							744			

** PROBLEMS/SOLUTIONS/COMMENTS

100% AVAILABILITY FOR THE FGD SYSTEM WAS REPORTED DURING THE PERIOD APRIL 1978 THROUGH MARCH 1979. THE SYSTEM SO2 REMOVAL EFFICIENCY WAS REPORTEDLY AVERAGING 95%.

4/79	SYSTEM							720			
5/79	SYSTEM							744			
6/79	SYSTEM							720			
7/79	SYSTEM							744			
8/79	SYSTEM							744			
9/79	SYSTEM							720			
10/79	SYSTEM							744			

ELECTRIC POWER DEVELOPMENT: ISOGO 1 (CONT.)

PERIOD	MODULE	AVAILABILITY	OPERABILITY	RELIABILITY	UTILIZATION	% REMOVAL SO2	% REMOVAL PART.	PER HOURS	BOILER HOURS	FGD HOURS	CAP. FACTOR
		PERFORMANCE DATA									
11/79	SYSTEM							720			
12/79	SYSTEM							744			
1/80	SYSTEM							744			
2/80	SYSTEM							696			
3/80	SYSTEM							744			
	** PROBLEMS/SOLUTIONS/COMMENTS										
	NO INFORMATION WAS AVAILABLE FOR THE APRIL 1979 THROUGH MARCH 1980 PERIOD.										
4/80	SYSTEM	100.0	100.0	100.0	100.0			720	720	720	
	** PROBLEMS/SOLUTIONS/COMMENTS										
	THE FGD SYSTEM OPERATED ALONG WITH THE BOILER FOR THE ENTIRE MONTH OF APRIL.										
5/80	SYSTEM	100.0	100.0	100.0	52.8			744	393	393	
6/80	SYSTEM	100.0	100.0	100.0	10.0			720	72	72	
	** PROBLEMS/SOLUTIONS/COMMENTS										
	THE BOILER WAS SHUT DOWN FROM MAY 17 TO JUNE 27 FOR ANNUAL MAINTENANCE. THE FGD SYSTEM WAS OPERATED DURING ALL OF THE BOILER OPERATION IN MAY AND JUNE.										
7/80	SYSTEM	100.0	100.0	100.0	100.0			744	744	744	90.9
8/80	SYSTEM	100.0	100.0	100.0	100.0			744	744	744	91.9
9/80	SYSTEM	100.0	100.0	100.0	99.8			720	718	718	90.4
	** PROBLEMS/SOLUTIONS/COMMENTS										
	DURING SEPTEMBER THE BOILER WAS OUT OF SERVICE FOR APPROXIMATELY TWO HOURS TO CHANGE THE TAP ON THE MAIN TRANSFORMER.										
10/80	SYSTEM	100.0	100.0	100.0	91.4			744	680	680	84.5
11/80	SYSTEM	100.0	100.0	100.0	100.0			720	720	720	91.7
12/80	SYSTEM	100.0	100.0	100.0	100.0			744	744	744	93.2
	** PROBLEMS/SOLUTIONS/COMMENTS										
	DURING JULY THROUGH DECEMBER THE FGD SYSTEM EXPERIENCED NO OPERATIONAL PROBLEMS.										
1/81	SYSTEM							744			
2/81	SYSTEM							672			
3/81	SYSTEM							744			

ELECTRIC POWER DEVELOPMENT: ISOGO 1 (CONT.)

PERFORMANCE DATA										
PERIOD	MODULE	AVAILABILITY	OPERABILITY	RELIABILITY	UTILIZATION	% REMOVAL SO2	% REMOVAL PART.	PER HOURS	BOILER HOURS	FGD HOURS	CAP. FACTOR

** PROBLEMS/SOLUTIONS/COMMENTS

THE FIRST QUARTER 1981 DATA IS NOT AVAILABLE AT THIS TIME; HOWEVER THE DATA WILL BE AVAILABLE IN THE SECOND QUARTER 1981 REPORT.

APPENDIX E
DESIGN AND PERFORMANCE DATA FOR OPERATIONAL FOREIGN FGD SYSTEMS

COMPANY NAME	ELECTRIC POWER DEVELOPMENT	
PLANT NAME	ISOGO	
UNIT NUMBER	2	
CITY	YOKOHAMA	
COUNTRY	JAPAN	
REGULATORY CLASSIFICATION	******	
PARTICULATE EMISSION LIMITATION - NG/J	20.	(.046 LB/MMBTU)
SO2 EMISSION LIMITATION - NG/J	58.	(.135 LB/MMBTU)
NOX EMISSION LIMITATION - NG/J	******	(****** LB/MMBTU)
NET PLANT GENERATING CAPACITY - MW	238	
GROSS UNIT GENERATING CAPACITY - MW	265	
NET UNIT GENERATING CAPACITY W/FGD - MW	238	
NET UNIT GENERATING CAPACITY WO/FGD - MW	246	
EQUIVALENT SCRUBBED CAPACITY - MW	265	
** UNIT DATA - BOILER AND STACK		
BOILER SUPPLIER	IHI	
BOILER TYPE	PULVERIZED COAL	
BOILER SERVICE LOAD	BASE	
DESIGN BOILER FLUE GAS FLOW - CU.M/S	405.36	(859000 ACFM)
BOILER FLUE GAS TEMPERATURE - C	170.0	(338 F)
STACK HEIGHT - M	140.	(460 FT)
STACK SHELL	CARBON STEEL	
STACK TOP DIAMETER - M	3.7	(12.0 FT)
** FUEL DATA		
FUEL TYPE	COAL	
FUEL GRADE	******	
AVERAGE HEAT CONTENT - J/G	25958.	(11160 BTU/LB)
RANGE HEAT CONTENT - BTU/LB	11160-11520	
AVERAGE ASH CONTENT - %	16.00	
RANGE ASH CONTENT - %	15.0-17.0	
AVERAGE MOISTURE CONTENT - %	7.00	
RANGE MOISTURE CONTENT - %	6.0-8.0	
AVERAGE SULFUR CONTENT - %	.60	
RANGE SULFUR CONTENT - %	0.2-0.6	
AVERAGE CHLORIDE CONTENT - %	********	
RANGE CHLORIDE CONTENT - %	******	
*** PARTICLE CONTROL		
** MECHANICAL COLLECTOR		
NUMBER	0	
TYPE	NONE	
** ESP		
NUMBER	2	
INLET FLUE GAS CAPACITY - CU.M/S	356.6	(755654 ACFM)
INLET FLUE GAS TEMPERATURE - C	150.0	(302 F)
PARTICLE REMOVAL EFFICENCY - %	98.0	
** PARTICLE SCRUBBER		
NUMBER	1	
NUMBER OF SPARES	0	
GENERIC TYPE	VENTURI TOWER	
SPECIFIC TYPE	NR	
TRADE NAME/COMMON NAME	NR	
SUPPLIER	IHI-CHEMICO	
DIMENSIONS - FT	43.6 DIA X 101.4	
SHELL GENERIC MATERIAL	CARBON STEEL	
SHELL SPECIFIC MATERIAL	AISI 1110	
LINER GENERIC MATERIAL	ORGANIC	
LINER SPECIFIC MATERIAL	GLASS FLAKE-FILLED POLYESTER	
GAS CONTACTING DEVICE TYPE	NONE	
NUMBER OF CONTACTING ZONES	1	
LIQUID RECIRCULATION RATE - LITER/S	2194.1	(34827 GPM)
L/G RATIO - LITER/CU.M	9.4	(70.0 GAL/1000ACF)
PRESSURE DROP - KPA	1.5	(5.9 IN-H2O)
SUPERFICIAL GAS VELOCITY - M/S	3.0	(10.0 FT/S)

ELECTRIC POWER DEVELOPMENT: ISOGO 2 (CONT.)

INLET GAS FLOW RATE - CU.M/S	424.6	(899864 ACFM)
INLET GAS TEMPERATURE - C	170.0	(338 F)

*** FGD SYSTEM

** GENERAL DATA

SALEABLE PRODUCT/THROWAWAY PRODUCT	SALEABLE PRODUCT
SO2 REMOVAL MODE	WET SCRUBBING
PROCESS TYPE	LIMESTONE
SYSTEM SUPPLIER	IHI-CHEMICO
DEVELOPMENT LEVEL	FULL SCALE
NEW/RETROFIT	RETROFIT
UNIT DESIGN PARTICLE REMOVAL EFFICIENCY - %	97.00
UNIT DESIGN SO2 REMOVAL EFFICIENCY - %	95.00
ENERGY CONSUMPTION - %	3.0
CURRENT STATUS	1
COMMERCIAL START-UP	5/76
INITIAL START-UP	3/76

** DESIGN AND OPERATING PARAMETERS

** QUENCHER/PRESATURATOR

CONSTRUCTION MATERIAL GENERIC TYPE	NR
CONSTRUCTION MATERIAL SPECIFIC TYPE	NR

** ABSORBER

NUMBER	1	
NUMBER OF SPARES	0	
GENERIC TYPE	VENTURI TOWER	
SPECIFIC TYPE	NR	
TRADE NAME/COMMON TYPE	NR	
SUPPLIER	IHI/CHEMICO	
DIMENSIONS - FT	43.5 DIA X 76.8	
SHELL GENERIC MATERIAL	CARBON STEEL	
SHELL SPECIFIC MATERIAL	NR	
SHELL MATERIAL TRADE NAME/COMMON TYPE	N/A	
LINER GENERIC MATERIAL	ORGANIC	
LINER SPECIFIC MATERIAL	GLASS FLAKE-FILLED POLYESTER	
LINER MATERIAL TRADE NAME/COMMON TYPE	NR	
GAS CONTACTING DEVICE TYPE	NONE	
NUMBER OF CONTACTING ZONES	1	
LIQUID RECIRCULATION RATE - LITER/S	2194.	(34827 GPM)
L/G RATIO - L/CU.M	9.4	(70.0 GAL/1000 ACF)
GAS-SIDE PRESSURE DROP - KPA	1.5	(5.9 IN-H2O)
SUPERFICAL GAS VELOCITY - M/SEC	3.0	(10.0 FT/S)
INLET GAS FLOW - CU. M/S	566.28	(1200000 ACFM)
INLET GAS TEMPERATURE - C	55.0	(131 F)
PARTICLE REMOVAL EFFICENCY - %	96.7	

** MIST ELIMINATOR

PRE-MIST ELIMINATOR/MIST ELIMINATOR	PRIMARY COLLECTOR	
GENERIC TYPE	IMPINGEMENT	
SPECIFIC TYPE	BAFFLE	
TRADE NAME/COMMON TYPE	CLOSED VANE	
CONFIGURATION	HORIZONTAL	
NUMBER OF STAGES	4	
NUMBER OF PASSES PER STAGE	4	
PRESSURE DROP - KPA	.5	(2.0 IN-H2O)
SUPERFICAL GAS VELOCITY - M/S	3.0	(9.8 FT/S)
CONSTRUCTION MATERIAL GENERIC TYPE	ORGANIC	
CONSTRUCTION MATERIAL SPECIFIC TYPE	NR	
WASH FREQUENCY	INTERMITTENT	

** REHEATER

GENERIC TYPE	DIRECT COMBUSTION	
SPECIFIC TYPE	NR	
TRADE NAME/COMMON TYPE	OIL	
TEMPERATURE INCREASE - C	83.9	(151 F)
INLET FLUE GAS FLOW RATE - CU. M/S	132.50	(280783 ACFM)
INLET FLUE GAS TEMPERATURE - C	120.0	(248 F)
CONSTRUCTION MATERIAL GENERIC TYPE	NR	

ELECTRIC POWER DEVELOPMENT: ISOGO 2 (CONT.)

CONSTRUCTION MATERIAL SPECIFIC TYPE	NR	
** FANS		
NUMBER	2	
NUMBER OF SPARES	0	
DESIGN	NR	
FUNCTION	BOOSTER	
APPLICATION	NR	
SERVICE	NR	
FLUE GAS FLOW RATE - CU.M/S	362.14	(767400 ACFM)
FLUE GAS TEMPERATURE - C	170.0	(338 F)
CONSTRUCTION MATERIAL GENERIC TYPE	NR	
** DAMPERS		
FUNCTION	NR	
GENERIC TYPE	NR	
SPECIFIC TYPE	NR	
CONSTRUCTION MATERIAL GENERIC TYPE	NR	
CONSTRUCTION MATERIAL SPECIFIC TYPE	NR	
LINER GENERIC MATERIAL TYPE	NR	
LINER SPECIFIC MATERIAL TYPE	NR	
** REAGENT PREPARATION EQUIPMENT		
FUNCTION	WET BALL MILL	
DEVICE	NR	
DEVICE TYPE	NR	

** TANKS

SERVICE	NUMBER
WASTE SLURRY BLEED	1
REAGENT PREP PRODUCT	1
THICKENER OVERFLOW	1
VACUUM FILTER FILTRATE	1
SPARGER/OXIDIZER	1

** PUMPS

SERVICE	NUMBER
SLURRY MAKEUP	2
ABSORBER RECIRCULATION	8
OXIDATION TOWER SUPPLY TRANSFER	2
FILTRATE	2

** SOLIDS CONCENTRATING/DEWATERING		
DEVICE	CENTRIFUGE	
NUMBER	4	
NUMBER OF SPARES	0	
FEED STREAM CHARACTERISTICS	18.5% SOLIDS	
OUTLET STREAM CHARACTERISTICS	90% SOLIDS	
** SOLIDS CONCENTRATING/DEWATERING		
DEVICE	THICKENER	
NUMBER	1	
NUMBER OF SPARES	0	
DIMENSIONS - FT	20.0 DIA X 10.0	
FEED STREAM CHARACTERISTICS	8.5% SOLIDS	
OUTLET STREAM CHARACTERISTICS	18.6% SOLIDS	
*** SALEABLE BYPRODUCTS		
NATURE	GYPSUM	
FULL LOAD QUANTITY - M T/H	4.53	(5.00 TPH)
DISPOSITION	MARKETED	

*** SLUDGE

ELECTRIC POWER DEVELOPMENT: ISOGO 2 (CONT.)

** TREATMENT

METHOD	FORCED OXIDATION
DEVICE	OXIDATION TANK
PROPRIETARY PROCESS	N/A

** DISPOSAL

NATURE	NR
TYPE	NR
SITE TREATMENT	NR

** PROCESS CONTROL AND INSTRUMENTATION

CHEMICAL PARAMETERS	PH
PROCESS CONTROL MANNER	AUTOMATIC
PROCESS CHEMISTRY MODE	FEEDBACK

** WATER BALANCE

WATER LOOP TYPE	OPEN
POND SEEPAGE/RUNOFF WATER LOSS - LITERS/S	40
MAKEUP WATER ADDITION - LITERS/S	22.3 (354 GPM)

PERFORMANCE DATA

PERIOD	MODULE	AVAILABILITY	OPERABILITY	RELIABILITY	UTILIZATION	% REMOVAL SO2	% REMOVAL PART.	PER HOURS	BOILER HOURS	FGD HOURS	CAP. FACTOR
4/78	SYSTEM							720			
5/78	SYSTEM							744			
6/78	SYSTEM							720			
7/78	SYSTEM							744			
8/78	SYSTEM							744			
9/78	SYSTEM							720			
10/78	SYSTEM							744			
11/78	SYSTEM							720			
12/78	SYSTEM							744			
1/79	SYSTEM							744			
2/79	SYSTEM							672			
3/79	SYSTEM							744			

** PROBLEMS/SOLUTIONS/COMMENTS

100% AVAILABILITY FOR THE FGD SYSTEM WAS REPORTED DURING THE PERIOD APRIL 1978 THROUGH MARCH 1979. THE FGD SYSTEM LOGGED A TOTAL OF 1,689 HOURS OF OPERATION.

4/79	SYSTEM							720			
5/79	SYSTEM							744			
6/79	SYSTEM							720			
7/79	SYSTEM							744			
8/79	SYSTEM							744			
9/79	SYSTEM							720			
10/79	SYSTEM							744			

ELECTRIC POWER DEVELOPMENT: ISOGO 2 (CONT.)

PERIOD	MODULE	AVAILABILITY	OPERABILITY	RELIABILITY	UTILIZATION	% REMOVAL SO2	% REMOVAL PART.	PER HOURS	BOILER HOURS	FGD HOURS	CAP. FACTOR
11/79	SYSTEM							720			
12/79	SYSTEM							744			
1/80	SYSTEM							744			
2/80	SYSTEM							696			
3/80	SYSTEM							744			
	** PROBLEMS/SOLUTIONS/COMMENTS										
	NO INFORMATION WAS AVAILABLE FOR THE APRIL 1979 THROUGH MARCH 1980 PERIOD.										
4/80	SYSTEM	100.0	100.0	100.0	31.3			720	225	225	
	** PROBLEMS/SOLUTIONS/COMMENTS										
	ON MARCH 30 THE BOILER WAS SHUTDOWN FOR ANNUAL MAINTENANCE. THE UNIT REMAINED DOWN THROUGH APRIL 20. WHEN OPERATIONS COMMENCED THE FGD SYSTEM OPERATED WITH THE BOILER FOR THE REST OF THE MONTH.										
5/80	SYSTEM	100.0	100.0	100.0	100.0			744	744	744	
6/80	SYSTEM	100.0	100.0	100.0	100.0			720	720	720	
	** PROBLEMS/SOLUTIONS/COMMENTS										
	DURING MAY AND JUNE THE FGD SYSTEM OPERATED WITH NO REPORTED PROBLEMS.										
7/80	SYSTEM	100.0	100.0	100.0	88.2			744	656	656	82.0
	** PROBLEMS/SOLUTIONS/COMMENTS										
	DURING JULY THE BOILER WAS OFF LINE APPROXIMATELY 88 HOURS FOR MAINTENANCE.										
8/80	SYSTEM	100.0	100.0	100.0	100.0			744	744	744	91.9
9/80	SYSTEM	100.0	100.0	100.0	99.8			720	718	718	92.1
	** PROBLEMS/SOLUTIONS/COMMENTS										
	APPROXIMATELY TWO HOURS OF BOILER OUTAGE TIME WAS NECESSARY TO CHANGE THE TAP OF THE MAIN TRANSFORMER.										
10/80	SYSTEM	100.0	100.0	100.0	100.0			744	744	744	92.2
11/80	SYSTEM	100.0	100.0	100.0	100.0			720	720	720	92.7
12/80	SYSTEM	100.0	100.0	100.0	100.0			744	744	744	
	** PROBLEMS/SOLUTIONS/COMMENTS										
	DURING JULY THROUGH DECEMBER THE FGD SYSTEM OPERATED WITH NO PROBLEMS.										
1/81	SYSTEM							744			
2/81	SYSTEM							672			
3/81	SYSTEM							744			

ELECTRIC POWER DEVELOPMENT: ISOGO 2 (CONT.)

PERFORMANCE DATA										
PERIOD	MODULE	AVAILABILITY	OPERABILITY	RELIABILITY	UTILIZATION	% REMOVAL SO2	% REMOVAL PART.	PER HOURS	BOILER HOURS	FGD HOURS	CAP. FACTOR

** PROBLEMS/SOLUTIONS/COMMENTS

THE FIRST QUARTER 1981 DATA IS NOT AVAILABLE AT THIS TIME; HOWEVER THE DATA WILL BE AVAILABLE IN THE SECOND QUARTER 1981 REPORT.

APPENDIX E
DESIGN AND PERFORMANCE DATA FOR OPERATIONAL FOREIGN FGD SYSTEMS

COMPANY NAME	ELECTRIC POWER DEVELOPMENT	
PLANT NAME	TAKASAGO	
UNIT NUMBER	1	
CITY	TAKASAGO	
COUNTRY	JAPAN	
REGULATORY CLASSIFICATION	******	
PARTICULATE EMISSION LIMITATION - NG/J	37.	(.086 LB/MMBTU)
SO2 EMISSION LIMITATION - NG/J	150.	(.350 LB/MMBTU)
NOX EMISSION LIMITATION - NG/J	******	(****** LB/MMBTU)
NET PLANT GENERATING CAPACITY - MW	230	
GROSS UNIT GENERATING CAPACITY - MW	250	
NET UNIT GENERATING CAPACITY W/FGD - MW	230	
NET UNIT GENERATING CAPACITY WO/FGD - MW	238	
EQUIVALENT SCRUBBED CAPACITY - MW	250	
** UNIT DATA - BOILER AND STACK		
BOILER SUPPLIER	MITSUBISHI	
BOILER TYPE	******	
BOILER SERVICE LOAD	BASE	
DESIGN BOILER FLUE GAS FLOW - CU.M/S	365.25	(774000 ACFM)
BOILER FLUE GAS TEMPERATURE - C	154.4	(310 F)
STACK HEIGHT - M	180.	(590 FT)
STACK SHELL	CARBON STEEL	
STACK TOP DIAMETER - M	3.6	(11.9 FT)
** FUEL DATA		
FUEL TYPE	COAL	
FUEL GRADE	******	
AVERAGE HEAT CONTENT - J/G	25958.	(11160 BTU/LB)
RANGE HEAT CONTENT - BTU/LB		11160-11520
AVERAGE ASH CONTENT - %	22.00	
RANGE ASH CONTENT - %	******	
AVERAGE MOISTURE CONTENT - %	7.00	
RANGE MOISTURE CONTENT - %	******	
AVERAGE SULFUR CONTENT - %	1.80	
RANGE SULFUR CONTENT - %	******	
AVERAGE CHLORIDE CONTENT - %	********	
RANGE CHLORIDE CONTENT - %	******	
*** PARTICLE CONTROL		
** MECHANICAL COLLECTOR		
NUMBER	0	
TYPE	NONE	
** ESP		
NUMBER	1	
TYPE	COLD SIDE	
SUPPLIER	MITSUBISHI HEAVY INDUSTRIES	
INLET FLUE GAS CAPACITY - CU.M/S	344.3	(729507 ACFM)
INLET FLUE GAS TEMPERATURE - C	154.4	(310 F)
PARTICLE REMOVAL EFFICENCY - %	99.5	
** PARTICLE SCRUBBER		
NUMBER	1	
NUMBER OF SPARES	0	
GENERIC TYPE	VENTURI TOWER	
SPECIFIC TYPE	NR	
TRADE NAME/COMMON NAME	NR	
SUPPLIER	MITSUI-CHEMICO	
DIMENSIONS - FT	37.7 DIA X 62.3	
SHELL GENERIC MATERIAL	CARBON STEEL	
SHELL SPECIFIC MATERIAL	AISI 1110	
LINER GENERIC MATERIAL	ORGANIC	
LINER SPECIFIC MATERIAL	NR	
GAS CONTACTING DEVICE TYPE	NONE	
NUMBER OF CONTACTING ZONES	1	
LIQUID RECIRCULATION RATE - LITER/S	1228.8	(19505 GPM)
L/G RATIO - LITER/CU.M	6.5	(48.6 GAL/1000ACF)

ELECTRIC POWER DEVELOPMENT: TAKASAGO 1 (CONT.)

PRESSURE DROP - KPA	1.5	(5.9 IN-H2O)
INLET GAS FLOW RATE - CU.M/S	260.5	(552000 ACFM)
INLET GAS TEMPERATURE - C	154.4	(310 F)
SO2 REMOVAL EFFICENCY - %	56.0	
PARTICLE REMOVAL EFFICIENCY - %	50.0	

*** FGD SYSTEM

** GENERAL DATA

SALEABLE PRODUCT/THROWAWAY PRODUCT	SALEABLE PRODUCT
SO2 REMOVAL MODE	WET SCRUBBING
PROCESS TYPE	LIMESTONE
SYSTEM SUPPLIER	MITSUI-CHEMICO
DEVELOPMENT LEVEL	FULL SCALE
NEW/RETROFIT	RETROFIT
UNIT DESIGN SO2 REMOVAL EFFICIENCY - %	93.00
ENERGY CONSUMPTION - %	3.2
CURRENT STATUS	1
INITIAL START-UP	2/75

** DESIGN AND OPERATING PARAMETERS

** QUENCHER/PRESATURATOR

CONSTRUCTION MATERIAL GENERIC TYPE	NR
CONSTRUCTION MATERIAL SPECIFIC TYPE	NR

** ABSORBER

NUMBER	1	
NUMBER OF SPARES	0	
GENERIC TYPE	VENTURI TOWER	
SPECIFIC TYPE	NR	
TRADE NAME/COMMON TYPE	NR	
SUPPLIER	MITSUI/CHEMICO	
DIMENSIONS - FT	45.9 DIA X 78.7	
SHELL GENERIC MATERIAL	CARBON STEEL	
SHELL SPECIFIC MATERIAL	NR	
SHELL MATERIAL TRADE NAME/COMMON TYPE	N/A	
LINER GENERIC MATERIAL	NR	
LINER SPECIFIC MATERIAL	NR	
LINER MATERIAL TRADE NAME/COMMON TYPE	NR	
GAS CONTACTING DEVICE TYPE	NONE	
NUMBER OF CONTACTING ZONES	1	
LIQUID RECIRCULATION RATE - LITER/S	2566.	(40727 GPM)
L/G RATIO - L/CU.M	6.5	(48.6 GAL/1000 ACF)
GAS-SIDE PRESSURE DROP - KPA	1.5	(5.9 IN-H2O)
INLET GAS TEMPERATURE - C	55.0	(131 F)
SO2 REMOVAL EFFICIENCY - %	85.0	

** ABSORBER

NUMBER	1	
GENERIC TYPE	VENTURI TOWER	
SPECIFIC TYPE	NR	
TRADE NAME/COMMON TYPE	NR	
SUPPLIER	MITSUI/CHEMICO	
DIMENSIONS - FT	26.2 DIA X 82.3	
SHELL GENERIC MATERIAL	CARBON STEEL	
SHELL SPECIFIC MATERIAL	NR	
SHELL MATERIAL TRADE NAME/COMMON TYPE	N/A	
LINER GENERIC MATERIAL	NR	
LINER SPECIFIC MATERIAL	NR	
LINER MATERIAL TRADE NAME/COMMON TYPE	NR	
GAS CONTACTING DEVICE TYPE	NONE	
NUMBER OF CONTACTING ZONES	1	
LIQUID RECIRCULATION RATE - LITER/S	610.	(9689 GPM)
INLET GAS FLOW - CU. M/S	69.37	(147000 ACFM)
INLET GAS TEMPERATURE - C	154.4	(310 F)
SO2 REMOVAL EFFICIENCY - %	63.0	

** ABSORBER

NUMBER	2
GENERIC TYPE	SPRAY TOWER

ELECTRIC POWER DEVELOPMENT: TAKASAGO 1 (CONT.)

SPECIFIC TYPE	NR	
TRADE NAME/COMMON TYPE	NR	
SUPPLIER	MITSUI/CHEMICO	
DIMENSIONS - FT	19.7 DIA X 65.0	
SHELL GENERIC MATERIAL	CARBON STEEL	
SHELL SPECIFIC MATERIAL	NR	
SHELL MATERIAL TRADE NAME/COMMON TYPE	N/A	
LINER GENERIC MATERIAL	NR	
LINER SPECIFIC MATERIAL	NR	
LINER MATERIAL TRADE NAME/COMMON TYPE	NR	
GAS CONTACTING DEVICE TYPE	NONE	
NUMBER OF CONTACTING ZONES	1	
LIQUID RECIRCULATION RATE - LITER/S	9986.	(***** GPM)
INLET GAS FLOW - CU. M/S	18.26	(38686 ACFM)
INLET GAS TEMPERATURE - C	154.4	(310 F)

** MIST ELIMINATOR

PRE-MIST ELIMINATOR/MIST ELIMINATOR	PRIMARY COLLECTOR	
GENERIC TYPE	IMPINGEMENT	
SPECIFIC TYPE	BAFFLE	
TRADE NAME/COMMON TYPE	CLOSED VANE	
NUMBER OF STAGES	4	
NUMBER OF PASSES PER STAGE	4	
CONSTRUCTION MATERIAL GENERIC TYPE	NR	
CONSTRUCTION MATERIAL SPECIFIC TYPE	NR	
WASH WATER SOURCE	BLENDED	

** REHEATER

NUMBER	1	
GENERIC TYPE	DIRECT COMBUSTION	
SPECIFIC TYPE	NR	
TRADE NAME/COMMON TYPE	OIL	
INLET FLUE GAS TEMPERATURE - C	120.0	(248 F)
CONSTRUCTION MATERIAL GENERIC TYPE	NR	
CONSTRUCTION MATERIAL SPECIFIC TYPE	NR	

** FANS

DESIGN	NR
FUNCTION	BOOSTER
APPLICATION	NR
SERVICE	NR
CONSTRUCTION MATERIAL GENERIC TYPE	NR

** DAMPERS

FUNCTION	NR
GENERIC TYPE	NR
SPECIFIC TYPE	NR
CONSTRUCTION MATERIAL GENERIC TYPE	NR
CONSTRUCTION MATERIAL SPECIFIC TYPE	NR
LINER GENERIC MATERIAL TYPE	NR
LINER SPECIFIC MATERIAL TYPE	NR

** REAGENT PREPARATION EQUIPMENT

FUNCTION	WET BALL MILL
DEVICE	NR
DEVICE TYPE	NR

** TANKS

SERVICE	NUMBER
CENTRIFUGE	3
REAGENT PREP PRODUCT	1
ABSORBER RECYCLE	2

** PUMPS

SERVICE	NUMBER
CIRCULATION	5
PH ADJUSTER CIRCULATION	3
REACTOR CIRCULATION	3

ELECTRIC POWER DEVELOPMENT: TAKASAGO 1 (CONT.)

** SOLIDS CONCENTRATING/DEWATERING
DEVICE: CENTRIFUGE
NUMBER: 7
OUTLET STREAM CHARACTERISTICS: 90% SOLIDS

** SOLIDS CONCENTRATING/DEWATERING
DEVICE: THICKENER
OUTLET STREAM CHARACTERISTICS: 20% SOLIDS

*** SALEABLE BYPRODUCTS
NATURE: GYPSUM
FULL LOAD QUANTITY - M T/H: 8.62 (9.50 TPH)

*** SLUDGE

** TREATMENT
METHOD: FORCED OXIDATION
DEVICE: OXIDATION TANK
PROPRIETARY PROCESS: N/A

** DISPOSAL
NATURE: NR
TYPE: NR
SITE TREATMENT: NR

** PROCESS CONTROL AND INSTRUMENTATION
CHEMICAL PARAMETERS: FLUE GAS VOLUME & SO2 CONCENTRATION

** WATER BALANCE
WATER LOOP TYPE: OPEN
POND SEEPAGE/RUNOFF WATER LOSS - LITERS/S: 40
MAKEUP WATER ADDITION - LITERS/S: 13.1 (208 GPM)

----------PERFORMANCE DATA----------

PERIOD	MODULE	AVAILABILITY	OPERABILITY	RELIABILITY	UTILIZATION	% REMOVAL SO2	% REMOVAL PART.	PER HOURS	BOILER HOURS	FGD HOURS	CAP. FACTOR
2/75	SYSTEM	96.9			88.8			672	616	597	
	** PROBLEMS/SOLUTIONS/COMMENTS										
	THE FGD SYSTEM WAS DOWN ONCE DUE TO A PIPING FLANGE LEAK.										
3/75	SYSTEM	100.0			48.4			744	360	360	
4/75	SYSTEM	100.0			44.1			720	318	318	
	** PROBLEMS/SOLUTIONS/COMMENTS										
	THE BOILER WAS TAKEN OFF-LINE FOR ANNUAL MAINTENANCE DURING MARCH AND APRIL.										
5/75	SYSTEM	100.0			96.4			744	717	717	
6/75	SYSTEM	97.9			97.9			720	720	705	
7/75	SYSTEM	98.0			97.8			744	743	728	
8/75	SYSTEM	98.0			98.0			744	744	729	
9/75	SYSTEM	95.7			91.7			720	690	660	

ELECTRIC POWER DEVELOPMENT: TAKASAGO 1 (CONT.)

PERIOD	MODULE	AVAILABILITY	OPERABILITY	RELIABILITY	UTILIZATION	% REMOVAL SO2	% REMOVAL PART.	PER HOURS	BOILER HOURS	FGD HOURS	CAP. FACTOR
		PERFORMANCE DATA									
	** PROBLEMS/SOLUTIONS/COMMENTS										
		SYSTEM DOWN TIME FROM JUNE THROUGH SEPTEMBER WAS DUE TO MIST ELIMINATOR SCALING.									
10/75	SYSTEM		95.2		95.2			744	744	708	
	** PROBLEMS/SOLUTIONS/COMMENTS										
		FAN VIBRATIONS CAUSED A SYSTEM OUTAGE DURING THE MONTH.									
11/75	SYSTEM		98.5		98.5			720	720	709	
	** PROBLEMS/SOLUTIONS/COMMENTS										
		MIST ELIMINATOR SCALING WAS ENCOUNTERED IN NOVEMBER.									
12/75	SYSTEM		95.9		92.2			744	715	686	
1/76	SYSTEM		100.0		100.0			744	744	744	
2/76	SYSTEM		95.2		90.8			696	664	632	
	** PROBLEMS/SOLUTIONS/COMMENTS										
		DURING FEBRUARY, THE SYSTEM AGAIN ENCOUNTERED MIST ELIMINATOR SCALING.									
3/76	SYSTEM		100.0		92.3			744	687	687	
4/76	SYSTEM		100.0		30.4			720	219	219	
5/76	SYSTEM		100.0		100.0			744	744	744	
6/76	SYSTEM		100.0		100.0			720	720	720	
7/76	SYSTEM		100.0		100.0			744	744	744	
8/76	SYSTEM							744	744		
9/76	SYSTEM		100.0		100.0			720	720	720	
10/76	SYSTEM		91.7		91.7			744	744	682	
	** PROBLEMS/SOLUTIONS/COMMENTS										
		THE SYSTEM WAS TAKEN OFF-LINE FOR CLEANING OF THE FIRST STAGE SCRUBBER.									
11/76	SYSTEM		99.3		99.3			720	720	715	
	** PROBLEMS/SOLUTIONS/COMMENTS										
		REPAIR OF A DUCT FORCED ONE SYSTEM OUTAGE DURING THE MONTH.									
12/76	SYSTEM		98.9		98.9			744	744	736	
	** PROBLEMS/SOLUTIONS/COMMENTS										
		A DECEMBER OUTAGE WAS DUE TO THE REPAIR OF A SPRAY PIPE.									
1/77	SYSTEM		99.3		99.3			744	744	739	

ELECTRIC POWER DEVELOPMENT: TAKASAGO 1 (CONT.)

PERIOD	MODULE	AVAILABILITY	OPERABILITY	RELIABILITY	UTILIZATION	% REMOVAL SO2	% REMOVAL PART.	PER HOURS	BOILER HOURS	FGD HOURS	CAP. FACTOR
		PERFORMANCE DATA									
	** PROBLEMS/SOLUTIONS/COMMENTS										
		THE SYSTEM WAS TAKEN OFF-LINE ONCE FOR CLEANING OF THE FIRST STAGE SCRUBBER.									
2/77	SYSTEM		100.0		100.0			672	672	672	
3/77	SYSTEM				.0			744	0	0	
	** PROBLEMS/SOLUTIONS/COMMENTS										
		THE SYSTEM WAS OFF DURING MARCH FOR ANNUAL BOILER MAINTENANCE.									
4/77	SYSTEM		100.0		71.3			720	513	513	
5/77	SYSTEM		98.7		98.7			744	744	734	
	** PROBLEMS/SOLUTIONS/COMMENTS										
		FAN VIBRATIONS CAUSED ONE SYSTEM OUTAGE DURING MAY.									
6/77	SYSTEM		100.0		100.0			720	720	720	
7/77	SYSTEM		100.0		96.4			744	717	717	
	** PROBLEMS/SOLUTIONS/COMMENTS										
		THE FIRST STAGE ABSORBER WAS CLEANED DURING JULY.									
8/77	SYSTEM		100.0		100.0			744	744	744	
9/77	SYSTEM		100.0		100.0			720	720	720	
10/77	SYSTEM		94.2		94.2			744	744	701	
	** PROBLEMS/SOLUTIONS/COMMENTS										
		THE SYSTEM WAS OFF LINE PART OF THIS MONTH FOR CLEANING OF THE SCRUBBERS AND REACTORS.									
11/77	SYSTEM		100.0		100.0			720	720	720	
12/77	SYSTEM		100.0		100.0			744	744	744	
1/78	SYSTEM		100.0		100.0			744	744	744	
	** PROBLEMS/SOLUTIONS/COMMENTS										
		THE FIRST REACTOR WAS CLEANED THIS MONTH.									
4/78	SYSTEM							720			
5/78	SYSTEM							744			
6/78	SYSTEM							720			
7/78	SYSTEM							744			
8/78	SYSTEM							744			
9/78	SYSTEM							720			
10/78	SYSTEM							744			

ELECTRIC POWER DEVELOPMENT: TAKASAGO 1 (CONT.)

PERIOD	MODULE	AVAILABILITY	OPERABILITY	RELIABILITY	UTILIZATION	% REMOVAL SO2	% REMOVAL PART.	PER HOURS	BOILER HOURS	FGD HOURS	CAP. FACTOR
11/78	SYSTEM							720			
12/78	SYSTEM							744			
1/79	SYSTEM							744			
2/79	SYSTEM							672			
3/79	SYSTEM							744			

** PROBLEMS/SOLUTIONS/COMMENTS

DURING APRIL 1978 THROUGH MARCH 1979 NO FORCED OUTAGES OCCURRED. THE FGD SYSTEM AVAILABILITY WAS 99.9%, AND LOGGED A TOTAL OF 7823.4 HOURS OF OPERATION WITH 6.1 HOURS OF SCHEDULED OUTAGE TIME.

4/79	SYSTEM							720			
6/79	SYSTEM							720			
7/79	SYSTEM							744			
8/79	SYSTEM							744			
9/79	SYSTEM							720			
10/79	SYSTEM							744			
11/79	SYSTEM							720			
12/79	SYSTEM							744			
1/80	SYSTEM							744			
2/80	SYSTEM							696			
3/80	SYSTEM							744			

** PROBLEMS/SOLUTIONS/COMMENTS

NO INFORMATION WAS AVAILABLE FOR THE APRIL 1979 THROUGH MARCH 1980 PERIOD.

4/80	SYSTEM	100.0	100.0	100.0	31.1			720	224	224	

** PROBLEMS/SOLUTIONS/COMMENTS

THE BOILER WAS SHUTDOWN ON MARCH 29 FOR ANNUAL MAINTENANCE. THE UNIT REMAINED OFF LINE THROUGH APRIL 21. WHEN OPERATIONS COMMENCED THE FGD SYSTEM OPERATED WITH THE BOILER FOR THE REST OF THE MONTH.

5/80	SYSTEM	100.0	100.0	100.0	100.0			744	744	744	
6/80	SYSTEM	100.0	100.0	100.0	100.0			720	720	720	

** PROBLEMS/SOLUTIONS/COMMENTS

THE FGD SYSTEM EXPERIENCED NO PROBLEMS DURING THE MAY-JUNE PERIOD.

7/80	SYSTEM	100.0	100.0	100.0	100.0			744	744	744	83.4
8/80	SYSTEM	100.0	100.0	100.0	100.0			744	744	744	83.6
9/80	SYSTEM	100.0	100.0	100.0	100.0			720	720	720	83.3

ELECTRIC POWER DEVELOPMENT: TAKASAGO 1 (CONT.)

PERIOD	MODULE	AVAILABILITY	OPERABILITY	RELIABILITY	UTILIZATION	% REMOVAL SO2	% REMOVAL PART.	PER HOURS	BOILER HOURS	FGD HOURS	CAP. FACTOR
	** PROBLEMS/SOLUTIONS/COMMENTS										
		NO PROBLEMS WERE ENCOUNTERED DURING THE THIRD QUARTER 1980.									
10/80	SYSTEM	99.5	99.5	99.5	99.5			744	744	740	85.3
	** PROBLEMS/SOLUTIONS/COMMENTS										
		THE FGD SYSTEM WAS SHUT DOWN FOR APPROXIMATELY FOUR HOURS IN OCTOBER FOR AN INSPECTION OF THE SECOND SCRUBBER OUTLET DUCT AND THE MIST ELIMINATOR. THE INSPECTION REVEALED THAT NO PROBLEM EXISTED.									
11/80	SYSTEM	100.0	100.0	100.0	100.0			720	720	720	85.0
12/80	SYSTEM	100.0	100.0	100.0	100.0			744	744	744	89.9
	** PROBLEMS/SOLUTIONS/COMMENTS										
		NO PROBLEMS WERE ENCOUNTERED DURING NOVEMBER AND DECEMBER.									
1/81	SYSTEM							744			
2/81	SYSTEM							672			
3/81	SYSTEM							744			
	** PROBLEMS/SOLUTIONS/COMMENTS										
		THE FIRST QUARTER 1981 DATA IS NOT AVAILABLE AT THIS TIME; HOWEVER THE DATA WILL BE AVAILABLE IN THE SECOND QUARTER 1981 REPORT.									

APPENDIX E
DESIGN AND PERFORMANCE DATA FOR OPERATIONAL FOREIGN FGD SYSTEMS

COMPANY NAME	ELECTRIC POWER DEVELOPMENT	
PLANT NAME	TAKASAGO	
UNIT NUMBER	2	
CITY	TAKASAGO	
COUNTRY	JAPAN	
REGULATORY CLASSIFICATION	******	
PARTICULATE EMISSION LIMITATION - NG/J	37.	(.086 LB/MMBTU)
SO2 EMISSION LIMITATION - NG/J	150.	(.350 LB/MMBTU)
NOX EMISSION LIMITATION - NG/J	******	(****** LB/MMBTU)
NET PLANT GENERATING CAPACITY - MW	230	
GROSS UNIT GENERATING CAPACITY - MW	250	
NET UNIT GENERATING CAPACITY W/FGD - MW	230	
NET UNIT GENERATING CAPACITY WO/FGD - MW	238	
EQUIVALENT SCRUBBED CAPACITY - MW	250	
** UNIT DATA - BOILER AND STACK		
BOILER SUPPLIER	MITSUBISHI	
BOILER TYPE	******	
BOILER SERVICE LOAD	BASE	
DESIGN BOILER FLUE GAS FLOW - CU.M/S	365.25	(774000 ACFM)
BOILER FLUE GAS TEMPERATURE - C	154.4	(310 F)
STACK HEIGHT - M	180.	(590 FT)
STACK SHELL	CARBON STEEL	
STACK TOP DIAMETER - M	3.6	(11.9 FT)
** FUEL DATA		
FUEL TYPE	COAL	
FUEL GRADE	******	
AVERAGE HEAT CONTENT - J/G	25958.	(11160 BTU/LB)
RANGE HEAT CONTENT - BTU/LB		11160-11520
AVERAGE ASH CONTENT - %	22.00	
RANGE ASH CONTENT - %	******	
AVERAGE MOISTURE CONTENT - %	7.00	
RANGE MOISTURE CONTENT - %	******	
AVERAGE SULFUR CONTENT - %	1.80	
RANGE SULFUR CONTENT - %	******	
AVERAGE CHLORIDE CONTENT - %	********	
RANGE CHLORIDE CONTENT - %	******	
*** PARTICLE CONTROL		
** MECHANICAL COLLECTOR		
NUMBER	0	
TYPE	NONE	
** ESP		
NUMBER	1	
TYPE	COLD SIDE	
SUPPLIER	MITSUBISHI HEAVY INDUSTRIES	
INLET FLUE GAS CAPACITY - CU.M/S	344.3	(729507 ACFM)
INLET FLUE GAS TEMPERATURE - C	154.4	(310 F)
PARTICLE REMOVAL EFFICENCY - %	99.5	
** PARTICLE SCRUBBER		
NUMBER	1	
NUMBER OF SPARES	0	
GENERIC TYPE	VENTURI TOWER	
SPECIFIC TYPE	NR	
TRADE NAME/COMMON NAME	NR	
SUPPLIER	MITSUI-CHEMICO	
DIMENSIONS - FT	37.7 DIA X 62.3	
SHELL GENERIC MATERIAL	CARBON STEEL	
SHELL SPECIFIC MATERIAL	AISI 1110	
LINER GENERIC MATERIAL	ORGANIC	
LINER SPECIFIC MATERIAL	NR	
GAS CONTACTING DEVICE TYPE	NONE	
NUMBER OF CONTACTING ZONES	1	
LIQUID RECIRCULATION RATE - LITER/S	1542.2	(24480 GPM)
L/G RATIO - LITER/CU.M	6.5	(48.6 GAL/1000ACF)

ELECTRIC POWER DEVELOPMENT: TAKASAGO 2 (CONT.)

PRESSURE DROP - KPA	1.5	(5.9 IN-H2O)
INLET GAS FLOW RATE - CU.M/S	260.5	(552000 ACFM)
INLET GAS TEMPERATURE - C	154.4	(310 F)
SO2 REMOVAL EFFICENCY - %	56.0	
PARTICLE REMOVAL EFFICIENCY - %	50.0	

*** FGD SYSTEM

** GENERAL DATA

SALEABLE PRODUCT/THROWAWAY PRODUCT	SALEABLE PRODUCT
SO2 REMOVAL MODE	WET SCRUBBING
PROCESS TYPE	LIMESTONE
SYSTEM SUPPLIER	MITSUI-CHEMICO
DEVELOPMENT LEVEL	FULL SCALE
NEW/RETROFIT	RETROFIT
UNIT DESIGN SO2 REMOVAL EFFICIENCY - %	93.00
ENERGY CONSUMPTION - %	3.2
CURRENT STATUS	1
INITIAL START-UP	3/76

** DESIGN AND OPERATING PARAMETERS

** QUENCHER/PRESATURATOR

CONSTRUCTION MATERIAL GENERIC TYPE	NR
CONSTRUCTION MATERIAL SPECIFIC TYPE	NR

** ABSORBER

NUMBER	1	
NUMBER OF SPARES	0	
GENERIC TYPE	VENTURI TOWER	
SPECIFIC TYPE	NR	
TRADE NAME/COMMON TYPE	NR	
SUPPLIER	MITSUI/CHEMICO	
DIMENSIONS - FT	45.9 DIA X 78.7	
SHELL GENERIC MATERIAL	CARBON STEEL	
SHELL SPECIFIC MATERIAL	NR	
SHELL MATERIAL TRADE NAME/COMMON TYPE	N/A	
LINER GENERIC MATERIAL	NR	
LINER SPECIFIC MATERIAL	NR	
LINER MATERIAL TRADE NAME/COMMON TYPE	NR	
GAS CONTACTING DEVICE TYPE	NONE	
NUMBER OF CONTACTING ZONES	1	
LIQUID RECIRCULATION RATE - LITER/S	2066.	(32801 GPM)
L/G RATIO - L/CU.M	6.5	(48.6 GAL/1000 ACF)
GAS-SIDE PRESSURE DROP - KPA	1.5	(5.9 IN-H2O)
INLET GAS FLOW - CU. M/S	280.24	(593855 ACFM)
INLET GAS TEMPERATURE - C	55.0	(131 F)
SO2 REMOVAL EFFICIENCY - %	85.0	

** ABSORBER

NUMBER	1	
GENERIC TYPE	VENTURI TOWER	
SPECIFIC TYPE	NR	
TRADE NAME/COMMON TYPE	NR	
SUPPLIER	MITSUI/CHEMICO	
DIMENSIONS - FT	26.2 DIA X 82.3	
SHELL GENERIC MATERIAL	CARBON STEEL	
SHELL SPECIFIC MATERIAL	NR	
SHELL MATERIAL TRADE NAME/COMMON TYPE	N/A	
LINER GENERIC MATERIAL	NR	
LINER SPECIFIC MATERIAL	NR	
LINER MATERIAL TRADE NAME/COMMON TYPE	NR	
GAS CONTACTING DEVICE TYPE	NONE	
NUMBER OF CONTACTING ZONES	1	
LIQUID RECIRCULATION RATE - LITER/S	743.	(11799 GPM)
INLET GAS FLOW - CU. M/S	69.37	(147000 ACFM)
INLET GAS TEMPERATURE - C	154.4	(310 F)
SO2 REMOVAL EFFICIENCY - %	63.0	

ELECTRIC POWER DEVELOPMENT: TAKASAGO 2 (CONT.)

** ABSORBER		
NUMBER	1	
GENERIC TYPE	SPRAY TOWER	
SPECIFIC TYPE	NR	
TRADE NAME/COMMON TYPE	NR	
SUPPLIER	MITSUI/CHEMICO	
SHELL GENERIC MATERIAL	CARBON STEEL	
SHELL SPECIFIC MATERIAL	NR	
SHELL MATERIAL TRADE NAME/COMMON TYPE	N/A	
LINER GENERIC MATERIAL	NR	
LINER SPECIFIC MATERIAL	NR	
LINER MATERIAL TRADE NAME/COMMON TYPE	NR	
GAS CONTACTING DEVICE TYPE	NONE	
NUMBER OF CONTACTING ZONES	1	
LIQUID RECIRCULATION RATE - LITER/S	19639.	(***** GPM)
INLET GAS FLOW - CU. M/S	36.51	(77372 ACFM)
INLET GAS TEMPERATURE - C	154.4	(310 F)
** MIST ELIMINATOR		
PRE-MIST ELIMINATOR/MIST ELIMINATOR	PRIMARY COLLECTOR	
GENERIC TYPE	IMPINGEMENT	
SPECIFIC TYPE	BAFFLE	
TRADE NAME/COMMON TYPE	CLOSED VANE	
NUMBER OF STAGES	4	
NUMBER OF PASSES PER STAGE	4	
CONSTRUCTION MATERIAL GENERIC TYPE	NR	
CONSTRUCTION MATERIAL SPECIFIC TYPE	NR	
WASH WATER SOURCE	BLENDED	
** REHEATER		
NUMBER	1	
GENERIC TYPE	DIRECT COMBUSTION	
SPECIFIC TYPE	NR	
TRADE NAME/COMMON TYPE	OIL	
INLET FLUE GAS TEMPERATURE - C	120.0	(248 F)
CONSTRUCTION MATERIAL GENERIC TYPE	NR	
CONSTRUCTION MATERIAL SPECIFIC TYPE	NR	
** FANS		
DESIGN	NR	
FUNCTION	BOOSTER	
APPLICATION	NR	
SERVICE	NR	
CONSTRUCTION MATERIAL GENERIC TYPE	NR	
** DAMPERS		
FUNCTION	NR	
GENERIC TYPE	NR	
SPECIFIC TYPE	NR	
CONSTRUCTION MATERIAL GENERIC TYPE	NR	
CONSTRUCTION MATERIAL SPECIFIC TYPE	NR	
LINER GENERIC MATERIAL TYPE	NR	
LINER SPECIFIC MATERIAL TYPE	NR	
** REAGENT PREPARATION EQUIPMENT		
FUNCTION	WET BALL MILL	
DEVICE	NR	
DEVICE TYPE	NR	

** TANKS	
SERVICE	NUMBER
-------	------
CENTRIFUGE	3
REAGENT PREP PRODUCT	1
ABSORBER RECYCLE	2

ELECTRIC POWER DEVELOPMENT: TAKASAGO 2 (CONT.)

** PUMPS

SERVICE	NUMBER
CIRCULATION	5
PH ADJUSTER CIRCULATION	2
REACTOR CIRCULATION	1

** SOLIDS CONCENTRATING/DEWATERING

DEVICE	CENTRIFUGE
NUMBER	7
OUTLET STREAM CHARACTERISTICS	90% SOLIDS

** SOLIDS CONCENTRATING/DEWATERING

DEVICE	THICKENER
OUTLET STREAM CHARACTERISTICS	20% SOLIDS

*** SALEABLE BYPRODUCTS

NATURE	GYPSUM
FULL LOAD QUANTITY - M T/H	8.62 (9.50 TPH)

*** SLUDGE

** TREATMENT

METHOD	FORCED OXIDATION
DEVICE	OXIDATION TANK
PROPRIETARY PROCESS	N/A

** DISPOSAL

NATURE	NR
TYPE	NR
SITE TREATMENT	NR

** PROCESS CONTROL AND INSTRUMENTATION

CHEMICAL PARAMETERS	FLUE GAS VOLUME & SO2 CONCENTRATION

** WATER BALANCE

WATER LOOP TYPE	OPEN
POND SEEPAGE/RUNOFF WATER LOSS - LITERS/S	40
MAKEUP WATER ADDITION - LITERS/S	13.1 (208 GPM)

PERFORMANCE DATA

PERIOD	MODULE	AVAILABILITY	OPERABILITY	RELIABILITY	UTILIZATION	% REMOVAL SO2	% REMOVAL PART.	PER HOURS	BOILER HOURS	FGD HOURS	CAP. FACTOR
3/76	SYSTEM		100.0		100.0			744	744	720	
4/76	SYSTEM		100.0		100.0			720	720	720	
5/76	SYSTEM		100.0		29.0			744	216	216	
6/76	SYSTEM		100.0		87.8			720	632	632	
	** PROBLEMS/SOLUTIONS/COMMENTS										
	THE SYSTEM WAS DOWN FOR PART OF MAY AND JUNE FOR ANNUAL BOILER MAINTENANCE.										
7/76	SYSTEM		100.0		100.0			744	744	744	
8/76	SYSTEM		100.0		100.0			744	744	744	
9/76	SYSTEM		100.0		100.0			720	720	720	
10/76	SYSTEM		94.2		94.2			744	744	701	

UTILITY FGD SURVEY: OCTOBER 1983 - SEPTEMBER 1984

ELECTRIC POWER DEVELOPMENT: TAKASAGO 2 (CONT.)

PERIOD	MODULE	AVAILABILITY	OPERABILITY	RELIABILITY	UTILIZATION	% REMOVAL SO2	% REMOVAL PART.	PER HOURS	BOILER HOURS	FGD HOURS	CAP. FACTOR
		PERFORMANCE DATA									
	** PROBLEMS/SOLUTIONS/COMMENTS										
		OUTAGE TIME DURING OCTOBER WAS NECESSARY FOR DUCT CLEANING.									
11/76	SYSTEM	100.0	100.0					720	720	720	
12/76	SYSTEM	99.3	99.3					744	744	739	
	** PROBLEMS/SOLUTIONS/COMMENTS										
		THE SYSTEM WAS DOWN BRIEFLY FOR REPAIR OF A GYPSUM CONVEYOR.									
1/77	SYSTEM	100.0	100.0					744	744	744	
2/77	SYSTEM	88.2	88.2					672	672	593	
3/77	SYSTEM	98.7	98.7					744	744	734	
	** PROBLEMS/SOLUTIONS/COMMENTS										
		OUTAGE TIME IN FEBRUARY & MARCH WAS NEEDED FOR CLEANING OF A PH CONTROLLER.									
4/77	SYSTEM	100.0	100.0					720	720	720	
5/77	SYSTEM	100.0	51.6					744	384	384	
6/77	SYSTEM	100.0	3.3					720	240	240	
7/77	SYSTEM	100.0	100.0					744	744	744	
8/77	SYSTEM	100.0	100.0					744	744	744	
9/77	SYSTEM	100.0	100.0					720	720	720	
10/77	SYSTEM	100.0	100.0					744	744	744	
11/77	SYSTEM	89.2	89.2					720	720	642	
	** PROBLEMS/SOLUTIONS/COMMENTS										
		CLEANING OF THE PH CONTROLLER CAUSED ONE OUTAGE DURING NOVEMBER.									
		A REACTOR WAS ALSO CLEANED THIS MONTH.									
12/77	SYSTEM	100.0	100.0					744	744	744	
1/78	SYSTEM							744	744		
2/78	SYSTEM							672			
3/78	SYSTEM							720			
4/78	SYSTEM							720			
5/78	SYSTEM							744			
6/78	SYSTEM							720			
7/78	SYSTEM							744			
8/78	SYSTEM							744			
9/78	SYSTEM							720			

ELECTRIC POWER DEVELOPMENT: TAKASAGO 2 (CONT.)

PERIOD	MODULE	AVAILABILITY	OPERABILITY	RELIABILITY	UTILIZATION	% REMOVAL SO2	% REMOVAL PART.	PER HOURS	BOILER HOURS	FGD HOURS	CAP. FACTOR
10/78	SYSTEM							744			
11/78	SYSTEM							720			
12/78	SYSTEM							744			
1/79	SYSTEM							744			
2/79	SYSTEM							672			
3/79	SYSTEM							744			

** PROBLEMS/SOLUTIONS/COMMENTS

DURING THE PERIOD FROM APRIL 1978 THROUGH MARCH 1979 THE FGD SYSTEM OPERATED WITH 99.8% AVAILABILITY. THERE WERE NO FORCED OUTAGES DURING THIS TIME. A TOTAL OF 8147.4 HOURS OF FGD SYSTEM OPERATION WERE LOGGED WITH 19.5 HOURS OF SCHEDULED OUTAGE TIME.

4/79	SYSTEM							720			
5/79	SYSTEM							744			
6/79	SYSTEM							720			
7/79	SYSTEM							744			
8/79	SYSTEM							744			
9/79	SYSTEM							720			
10/79	SYSTEM							744			
11/79	SYSTEM							720			
12/79	SYSTEM							744			
1/80	SYSTEM							744			
2/80	SYSTEM							696			
3/80	SYSTEM							744			

** PROBLEMS/SOLUTIONS/COMMENTS

NO INFORMATION WAS AVAILABLE FOR THE APRIL 1979 THROUGH MARCH 1980 PERIOD.

4/80	SYSTEM	100.0	100.0	100.0	100.0			720	720	720	
5/80	SYSTEM	100.0	100.0	100.0	100.0			744	744	744	

** PROBLEMS/SOLUTIONS/COMMENTS

DURING APRIL AND MAY THE UTILITY EXPERIENCED NO PROBLEMS WITH THE FGD SYSTEM.

6/80	SYSTEM	100.0	100.0	100.0	24.6			720	177	177	

** PROBLEMS/SOLUTIONS/COMMENTS

THE BOILER WAS SHUTDOWN FROM JUNE 3 TO JUNE 24 FOR ANNUAL MAINTENANCE. THE FGD SYSTEM OPERATED ALONG WITH THE BOILER THE REMAINDER OF THE TIME.

7/80	SYSTEM	100.0	100.0	100.0	100.0			744	744	744	83.0

UTILITY FGD SURVEY: OCTOBER 1983 - SEPTEMBER 1984

ELECTRIC POWER DEVELOPMENT: TAKASAGO 2 (CONT.)

PERIOD	MODULE	AVAILABILITY	OPERABILITY	RELIABILITY	UTILIZATION	% REMOVAL SO2	% REMOVAL PART.	PER HOURS	BOILER HOURS	FGD HOURS	CAP. FACTOR
		PERFORMANCE DATA									
8/80	SYSTEM	100.0	100.0	100.0	100.0			744	744	744	83.3
9/80	SYSTEM	100.0	100.0	100.0	100.0			720	720	720	83.4
10/80	SYSTEM	100.0	100.0	100.0	100.0			744	744	744	85.1
11/80	SYSTEM	100.0	100.0	100.0	100.0			720	720	720	84.8
12/80	SYSTEM	100.0	100.0	100.0	87.3			744	649	649	78.4

** PROBLEMS/SOLUTIONS/COMMENTS

DURING JULY THROUGH DECEMBER NO FGD-RELATED PROBLEMS WERE EXPERIENCED.

IN DECEMBER THE BOILER WAS OUT OF SERVICE APPROXIMATELY FOUR DAYS FOR GENERAL MAINTENANCE.

1/81	SYSTEM							744			
2/81	SYSTEM							672			
3/81	SYSTEM							744			

** PROBLEMS/SOLUTIONS/COMMENTS

THE FIRST QUARTER 1981 DATA IS NOT AVAILABLE AT THIS TIME; HOWEVER THE DATA WILL BE AVAILABLE IN THE SECOND QUARTER 1981 REPORT.

APPENDIX E
DESIGN AND PERFORMANCE DATA FOR OPERATIONAL FOREIGN FGD SYSTEMS

COMPANY NAME	ELECTRIC POWER DEVELOPMENT	
PLANT NAME	TAKEHARA	
UNIT NUMBER	1	
CITY	MIHARA	
COUNTRY	JAPAN	
REGULATORY CLASSIFICATION	******	
PARTICULATE EMISSION LIMITATION - NG/J	56.	(.130 LB/MMBTU)
SO2 EMISSION LIMITATION - NG/J	271.	(.630 LB/MMBTU)
NOX EMISSION LIMITATION - NG/J	******	(****** LB/MMBTU)
NET PLANT GENERATING CAPACITY - MW	231	
GROSS UNIT GENERATING CAPACITY - MW	250	
NET UNIT GENERATING CAPACITY W/FGD - MW	231	
NET UNIT GENERATING CAPACITY WO/FGD - MW	239	
EQUIVALENT SCRUBBED CAPACITY - MW	250	
** UNIT DATA - BOILER AND STACK		
BOILER SUPPLIER	BABCOCK-HITACHI	
BOILER TYPE	PULVERIZED COAL	
BOILER SERVICE LOAD	BASE	
DESIGN BOILER FLUE GAS FLOW - CU.M/S	577.13	(1223000 ACFM)
BOILER FLUE GAS TEMPERATURE - C	140.0	(284 F)
STACK HEIGHT - M	201.	(660 FT)
STACK SHELL	CARBON STEEL	
STACK TOP DIAMETER - M	3.6	(11.9 FT)
** FUEL DATA		
FUEL TYPE	COAL	
FUEL GRADE	******	
AVERAGE HEAT CONTENT - J/G	25130.	(10804 BTU/LB)
RANGE HEAT CONTENT - BTU/LB		10804-11520
AVERAGE ASH CONTENT - %	23.00	
RANGE ASH CONTENT - %	******	
AVERAGE MOISTURE CONTENT - %	9.05	
RANGE MOISTURE CONTENT - %	******	
AVERAGE SULFUR CONTENT - %	2.00	
RANGE SULFUR CONTENT - %	******	
AVERAGE CHLORIDE CONTENT - %	.05	
RANGE CHLORIDE CONTENT - %	******	
*** PARTICLE CONTROL		
** MECHANICAL COLLECTOR		
NUMBER	0	
TYPE	NONE	
** ESP		
NUMBER	1	
TYPE	COLD SIDE	
SUPPLIER	SUMITOMO HEAVY INDUSTRIES	
INLET FLUE GAS CAPACITY - CU.M/S	333.2	(706000 ACFM)
INLET FLUE GAS TEMPERATURE - C	140.0	(284 F)
PARTICLE REMOVAL EFFICENCY - %	98.0	
** PARTICLE SCRUBBER		
NUMBER	2	
GENERIC TYPE	VENTURI TOWER	
SPECIFIC TYPE	NR	
TRADE NAME/COMMON NAME	NR	
SUPPLIER	HITACHI	
SHELL GENERIC MATERIAL	NR	
SHELL SPECIFIC MATERIAL	NR	
LINER GENERIC MATERIAL	ORGANIC	
LINER SPECIFIC MATERIAL	NR	
GAS CONTACTING DEVICE TYPE	NONE	
NUMBER OF CONTACTING ZONES	1	
LIQUID RECIRCULATION RATE - LITER/S	533.7	(8471 GPM)
L/G RATIO - LITER/CU.M	2.5	(18.7 GAL/1000ACF)
PRESSURE DROP - KPA	2.3	(9.1 IN-H2O)
INLET GAS FLOW RATE - CU.M/S	168.0	(356000 ACFM)

ELECTRIC POWER DEVELOPMENT: TAKEHARA 1 (CONT.)

INLET GAS TEMPERATURE - C	140.0	(284 F)

*** FGD SYSTEM

** GENERAL DATA

SALEABLE PRODUCT/THROWAWAY PRODUCT	SALEABLE PRODUCT
SO2 REMOVAL MODE	WET SCRUBBING
PROCESS TYPE	LIMESTONE
PROCESS ADDITIVES	NONE
SYSTEM SUPPLIER	BABCOCK-HITACHI
DEVELOPMENT LEVEL	FULL SCALE
NEW/RETROFIT	RETROFIT
UNIT DESIGN PARTICLE REMOVAL EFFICIENCY - %	91.70
UNIT DESIGN SO2 REMOVAL EFFICIENCY - %	94.20
ENERGY CONSUMPTION - %	3.2
CURRENT STATUS	1
COMMERCIAL START-UP	2/79
INITIAL START-UP	2/77

** DESIGN AND OPERATING PARAMETERS

** QUENCHER/PRESATURATOR

CONSTRUCTION MATERIAL GENERIC TYPE	NR
CONSTRUCTION MATERIAL SPECIFIC TYPE	NR

** ABSORBER

NUMBER	2	
GENERIC TYPE	TRAY TOWER	
SPECIFIC TYPE	NR	
TRADE NAME/COMMON TYPE	NR	
SUPPLIER	BABCOCK-HITACHI	
SHELL GENERIC MATERIAL	CARBON STEEL	
SHELL SPECIFIC MATERIAL	NR	
SHELL MATERIAL TRADE NAME/COMMON TYPE	N/A	
LINER GENERIC MATERIAL	ORGANIC	
LINER SPECIFIC MATERIAL	POLYESTER	
LINER MATERIAL TRADE NAME/COMMON TYPE	NR	
NUMBER OF CONTACTING ZONES	5	
LIQUID RECIRCULATION RATE - LITER/S	721.	(11448 GPM)
L/G RATIO - L/CU.M	7.0	(52.4 GAL/1000 ACF)
GAS-SIDE PRESSURE DROP - KPA	3.8	(15.2 IN-H2O)
INLET GAS FLOW - CU. M/S	164.76	(349142 ACFM)
INLET GAS TEMPERATURE - C	52.2	(126 F)

** MIST ELIMINATOR

PRE-MIST ELIMINATOR/MIST ELIMINATOR	PRIMARY COLLECTOR	
NUMBER PER SYSTEM	2	
GENERIC TYPE	IMPINGEMENT	
SPECIFIC TYPE	TUBE BANK	
TRADE NAME/COMMON TYPE	VERTICAL PARALLEL TUBES	
CONFIGURATION	HORIZONTAL	
PRESSURE DROP - KPA	.1	(.4 IN-H2O)
CONSTRUCTION MATERIAL GENERIC TYPE	NR	
CONSTRUCTION MATERIAL SPECIFIC TYPE	NR	
WASH WATER SOURCE	FRESH	
WASH FREQUENCY	CONTINUOUS	
WASH RATE - L/S	1.3	(20 GAL/MIN)

** REHEATER

GENERIC TYPE	DIRECT COMBUSTION	
SPECIFIC TYPE	NR	
TRADE NAME/COMMON TYPE	OIL	
INLET FLUE GAS TEMPERATURE - C	120.0	(248 F)
CONSTRUCTION MATERIAL GENERIC TYPE	NR	
CONSTRUCTION MATERIAL SPECIFIC TYPE	NR	

** FANS

NUMBER	2
DESIGN	NR
FUNCTION	BOOSTER
APPLICATION	INDUCED DRAFT

ELECTRIC POWER DEVELOPMENT: TAKEHARA 1 (CONT.)

SERVICE	WET
CONSTRUCTION MATERIAL GENERIC TYPE	NR
** DAMPERS	
FUNCTION	NR
GENERIC TYPE	NR
SPECIFIC TYPE	NR
CONSTRUCTION MATERIAL GENERIC TYPE	NR
CONSTRUCTION MATERIAL SPECIFIC TYPE	NR
LINER GENERIC MATERIAL TYPE	NR
LINER SPECIFIC MATERIAL TYPE	NR
** REAGENT PREPARATION EQUIPMENT	
FUNCTION	WET BALL MILL
DEVICE	NR
DEVICE TYPE	NR
** TANKS	
SERVICE	NUMBER
-------	------
PRESATURATOR/QUENCHER	2
ABSORBER RECYCLE	****
VACUUM FILTER FILTRATE	****
SPARGER/OXIDIZER	2
** PUMPS	
SERVICE	NUMBER
-------	------
COOLER RECYCLE	2
ABSORBER RECIRCULATION	4
** SOLIDS CONCENTRATING/DEWATERING	
DEVICE	CENTRIFUGE
NUMBER	9
NUMBER OF SPARES	1
CAPACITY	4 GPM
FEED STREAM CHARACTERISTICS	20% SOLIDS
OUTLET STREAM CHARACTERISTICS	86% SOLIDS
** SOLIDS CONCENTRATING/DEWATERING	
DEVICE	THICKENER
NUMBER	1
CONFIGURATION	HORIZONTAL
DIMENSIONS - FT	45.0 DIA X 10.0
FEED STREAM CHARACTERISTICS	12% SOLIDS
OUTLET STREAM CHARACTERISTICS	20% SOLIDS
*** SALEABLE BYPRODUCTS	
NATURE	GYPSUM
FULL LOAD QUANTITY - M T/H	9.89 (10.90 TPH)
QUALITY - %	95.0
DISPOSITION	MARKETED
*** SLUDGE	
** TREATMENT	
METHOD	FORCED OXIDATION
DEVICE	OXIDATION TANK
PROPRIETARY PROCESS	N/A
** DISPOSAL	
NATURE	NR
TYPE	NR
SITE TREATMENT	NR

ELECTRIC POWER DEVELOPMENT: TAKEHARA 1 (CONT.)

** PROCESS CONTROL AND INSTRUMENTATION

CHEMICAL PARAMETERS	PH, GAS FLOW
CONTROL LEVELS	PH 5.0-6.0
PROCESS CONTROL MANNER	AUTOMATIC

** WATER BALANCE

WATER LOOP TYPE	OPEN	
POND SEEPAGE/RUNOFF WATER LOSS - LITERS/S	60	
MAKEUP WATER ADDITION - LITERS/S	14.9	(237 GPM)

PERFORMANCE DATA

PERIOD	MODULE	AVAILABILITY	OPERABILITY	RELIABILITY	UTILIZATION	% REMOVAL SO2	% REMOVAL PART.	PER HOURS	BOILER HOURS	FGD HOURS	CAP. FACTOR
4/78	SYSTEM							720			
5/78	SYSTEM							744			
6/78	SYSTEM							720			
7/78	SYSTEM							744			
8/78	SYSTEM							744			
9/78	SYSTEM							720			
10/78	SYSTEM							744			
11/78	SYSTEM							720			
12/78	SYSTEM							744			
1/79	SYSTEM							744			
2/79	SYSTEM							672			
3/79	SYSTEM							744			

** PROBLEMS/SOLUTIONS/COMMENTS

99.95% AVAILABILITY WAS REPORTED FOR THE PERIOD FROM APRIL 1978 THROUGH MARCH 1979.

4/79	SYSTEM							720			
5/79	SYSTEM							744			
6/79	SYSTEM							720			
7/79	SYSTEM							744			
8/79	SYSTEM							744			
9/79	SYSTEM							720			
10/79	SYSTEM							744			
11/79	SYSTEM							720			
12/79	SYSTEM							744			
1/80	SYSTEM							744			
2/80	SYSTEM							696			
3/80	SYSTEM							744			

ELECTRIC POWER DEVELOPMENT: TAKEHARA 1 (CONT.)

PERIOD	MODULE	AVAILABILITY	OPERABILITY	RELIABILITY	UTILIZATION	% REMOVAL SO2	% REMOVAL PART.	PER HOURS	BOILER HOURS	FGD HOURS	CAP. FACTOR
		PERFORMANCE DATA									
	** PROBLEMS/SOLUTIONS/COMMENTS										
		NO INFORMATION WAS AVAILABLE FOR THE APRIL 1979 THROUGH MARCH 1980 PERIOD.									
4/80	SYSTEM	100.0	100.0	100.0	100.0			720	720	720	
5/80	SYSTEM	100.0	100.0	100.0	100.0			744	744	744	
6/80	SYSTEM	87.9	100.0	100.0	87.9			720	633	633	82.4
	** PROBLEMS/SOLUTIONS/COMMENTS										
		THE FGD SYSTEM WAS OUT OF SERVICE FOR APPROXIMATELY 3 DAYS IN JUNE TO REMOVE THE SCALE ACCUMULATION IN THE FGD OUTLET DUCT.									
7/80	SYSTEM	100.0	100.0	100.0	100.0			744	744	744	95.5
8/80	SYSTEM	100.0	100.0	100.0	100.0			744	744	744	95.3
9/80	SYSTEM	100.0	100.0	100.0	100.0			720	720	720	95.3
	** PROBLEMS/SOLUTIONS/COMMENTS										
		NO PROBLEMS WERE ENCOUNTERED DURING THE THIRD QUARTER 1980.									
10/80	SYSTEM	100.0	100.0	100.0	100.0			744	744	744	94.5
11/80	SYSTEM	100.0	100.0	100.0	100.0			720	720	720	95.2
12/80	SYSTEM	100.0	100.0	100.0	27.7			744	206	206	22.4
	** PROBLEMS/SOLUTIONS/COMMENTS										
		THE BOILER WAS OUT OF SERVICE FROM DECEMBER 1 THROUGH DECEMBER 25 FOR SCHEDULED MAINTENANCE.									
1/81	SYSTEM							744			
2/81	SYSTEM							672			
3/81	SYSTEM							744			
	** PROBLEMS/SOLUTIONS/COMMENTS										
		THE FIRST QUARTER 1981 DATA IS NOT AVAILABLE AT THIS TIME; HOWEVER THE DATA WILL BE AVAILABLE IN THE SECOND QUARTER 1981 REPORT.									

APPENDIX E
DESIGN AND PERFORMANCE DATA FOR OPERATIONAL FOREIGN FGD SYSTEMS

COMPANY NAME	HOKKAIDO ELECTRIC POWER	
PLANT NAME	TOMATOATSUMA THERMAL POW	
UNIT NUMBER	1	
CITY	TOMAKOMAI	
COUNTRY	JAPAN	
REGULATORY CLASSIFICATION	******	
PARTICULATE EMISSION LIMITATION - NG/J	******	(****** LB/MMBTU)
SO2 EMISSION LIMITATION - NG/J	******	(****** LB/MMBTU)
NOX EMISSION LIMITATION - NG/J	******	(****** LB/MMBTU)
NET PLANT GENERATING CAPACITY - MW	350	
GROSS UNIT GENERATING CAPACITY - MW	350	
NET UNIT GENERATING CAPACITY W/FGD - MW	175	
NET UNIT GENERATING CAPACITY WO/FGD - MW	175	
EQUIVALENT SCRUBBED CAPACITY - MW	350	
** UNIT DATA - BOILER AND STACK		
BOILER SUPPLIER	BABCOCK-HITACHI	
BOILER TYPE	PULVERIZED COAL	
BOILER SERVICE LOAD	BASE	
DESIGN BOILER FLUE GAS FLOW - CU.M/S	508.21	(1076939 ACFM)
BOILER FLUE GAS TEMPERATURE - C	121.1	(250 F)
STACK HEIGHT - M	170.	(558 FT)
STACK SHELL	CARBON STEEL	
STACK TOP DIAMETER - M	4.5	(14.6 FT)
** FUEL DATA		
FUEL TYPE	COAL	
FUEL GRADE	BITUMINOUS	
AVERAGE HEAT CONTENT - J/G	25121.	(10800 BTU/LB)
RANGE HEAT CONTENT - BTU/LB	******	
AVERAGE ASH CONTENT - %	20.50	
RANGE ASH CONTENT - %	******	
AVERAGE MOISTURE CONTENT - %	7.00	
RANGE MOISTURE CONTENT - %	******	
AVERAGE SULFUR CONTENT - %	.30	
RANGE SULFUR CONTENT - %	******	
AVERAGE CHLORIDE CONTENT - %	********	
RANGE CHLORIDE CONTENT - %	******	
*** PARTICLE CONTROL		
** ESP		
NUMBER	4	
TYPE	HOT SIDE	
SUPPLIER	HITACHI	
INLET FLUE GAS CAPACITY - CU.M/S	828.8	(1756252 ACFM)
INLET FLUE GAS TEMPERATURE - C	363.9	(687 F)
PRESSURE DROP - KPA	.2	(1. IN-H2O)
PARTICLE REMOVAL EFFICENCY - %	99.8	
** PARTICLE SCRUBBER		
NUMBER	1	
GENERIC TYPE	VENTURI TOWER	
SPECIFIC TYPE	NR	
TRADE NAME/COMMON NAME	NR	
SUPPLIER	BABCOCK-HITACHI	
SHELL GENERIC MATERIAL	NR	
SHELL SPECIFIC MATERIAL	NR	
LINER GENERIC MATERIAL	NR	
LINER SPECIFIC MATERIAL	NR	
GAS CONTACTING DEVICE TYPE	NONE	
INLET GAS FLOW RATE - CU.M/S	198.7	(421036 ACFM)
INLET GAS TEMPERATURE - C	47.2	(117 F)
*** FGD SYSTEM		
** GENERAL DATA		
SALEABLE PRODUCT/THROWAWAY PRODUCT	SALEABLE PRODUCT	
SO2 REMOVAL MODE	WET SCRUBBING	

HOKKAIDO ELECTRIC POWER: TOMATOATSUMA THERMAL POW 1 (CONT.)

PROCESS TYPE	LIMESTONE	
SYSTEM SUPPLIER	BABCOCK-HITACHI	
DEVELOPMENT LEVEL	FULL SCALE	
NEW/RETROFIT	RETROFIT	
UNIT DESIGN SO2 REMOVAL EFFICIENCY - %	90.00	
ENERGY CONSUMPTION - %	.0	
CURRENT STATUS	1	
COMMERCIAL START-UP	10/80	
INITIAL START-UP	7/80	
** DESIGN AND OPERATING PARAMETERS		
** QUENCHER/PRESATURATOR		
CONSTRUCTION MATERIAL GENERIC TYPE	NR	
CONSTRUCTION MATERIAL SPECIFIC TYPE	NR	
** ABSORBER		
NUMBER	1	
GENERIC TYPE	NR	
SPECIFIC TYPE	NR	
TRADE NAME/COMMON TYPE	NR	
SUPPLIER	BABCOCK-HITACHI	
SHELL GENERIC MATERIAL	NR	
SHELL SPECIFIC MATERIAL	NR	
SHELL MATERIAL TRADE NAME/COMMON TYPE	NR	
LINER GENERIC MATERIAL	NR	
LINER SPECIFIC MATERIAL	NR	
LINER MATERIAL TRADE NAME/COMMON TYPE	NR	
INLET GAS FLOW - CU. M/S	198.69	(421036 ACFM)
INLET GAS TEMPERATURE - C	47.2	(117 F)
PARTICLE REMOVAL EFFICENCY - %	90.0	
** MIST ELIMINATOR		
PRE-MIST ELIMINATOR/MIST ELIMINATOR	PRIMARY COLLECTOR	
NUMBER PER SYSTEM	1	
GENERIC TYPE	IMPINGEMENT	
SPECIFIC TYPE	BAFFLE	
TRADE NAME/COMMON TYPE	NR	
CONFIGURATION	VERTICAL	
CONSTRUCTION MATERIAL GENERIC TYPE	NR	
CONSTRUCTION MATERIAL SPECIFIC TYPE	NR	
** REHEATER		
NUMBER	1	
GENERIC TYPE	WASTE HEAT RECOVERY	
SPECIFIC TYPE	GAS-GAS	
TRADE NAME/COMMON TYPE	WHEEL TYPE	
PERCENT GAS BYPASSED - AVG	14.3	
TEMPERATURE INCREASE - C	65.6	(118 F)
INLET FLUE GAS FLOW RATE - CU. M/S	199.17	(422057 ACFM)
CONSTRUCTION MATERIAL GENERIC TYPE	NR	
CONSTRUCTION MATERIAL SPECIFIC TYPE	NR	
** FANS		
NUMBER	1	
DESIGN	CENTRIFUGAL	
SUPPLIER	HITACHI,LDT.	
FUNCTION	BOOSTER	
APPLICATION	NR	
SERVICE	NR	
FLUE GAS FLOW RATE - CU.M/S	254.47	(539247 ACFM)
FLUE GAS TEMPERATURE - C	137.2	(279 F)
CONSTRUCTION MATERIAL GENERIC TYPE	NR	
** DAMPERS		
FUNCTION	NR	
GENERIC TYPE	NR	
SPECIFIC TYPE	NR	
CONSTRUCTION MATERIAL GENERIC TYPE	NR	
CONSTRUCTION MATERIAL SPECIFIC TYPE	NR	
LINER GENERIC MATERIAL TYPE	NR	

HOKKAIDO ELECTRIC POWER: TOMATOATSUMA THERMAL POW 1 (CONT.)

LINER SPECIFIC MATERIAL TYPE	NR
** REAGENT PREPARATION EQUIPMENT	
FUNCTION	WET BALL MILL
DEVICE	NR
DEVICE TYPE	NR
NUMBER	1
PRODUCT QUALITY - % SOLIDS	92.0
** PUMPS	
SERVICE	NUMBER
NR	****
** SOLIDS CONCENTRATING/DEWATERING	
DEVICE	THICKENER
NUMBER	2
** SOLIDS CONCENTRATING/DEWATERING	
DEVICE	CENTRIFUGE
NUMBER	3
NUMBER OF SPARES	1
*** SALEABLE BYPRODUCTS	
NATURE	GYPSUM
QUALITY - %	45.0
DISPOSITION	MARKETED
*** SLUDGE	
** TREATMENT	
METHOD	NR
DEVICE	NR
PROPRIETARY PROCESS	NR
** DISPOSAL	
NATURE	NR
TYPE	NR
SITE TREATMENT	NR
** WATER BALANCE	
WATER LOOP TYPE	CLOSED
MAKEUP WATER ADDITION - LITERS/S	4.0 (63 GPM)

PERFORMANCE DATA

PERIOD	MODULE	AVAILABILITY	OPERABILITY	RELIABILITY	UTILIZATION	% REMOVAL SO2	% REMOVAL PART.	PER HOURS	BOILER HOURS	FGD HOURS	CAP. FACTOR
10/80	SYSTEM	100.0	100.0	100.0	70.3	94.40		744	523	523	46.0
	** PROBLEMS/SOLUTIONS/COMMENTS										
	OPERATIONS AT THE TOMATOATSUMA STATION COMMENCED IN OCTOBER 1980.										
11/80	SYSTEM	100.0	100.0	100.0	85.1			720	613	613	61.1
12/80	SYSTEM	100.0	100.0	100.0	100.0			744	744	744	94.7
	** PROBLEMS/SOLUTIONS/COMMENTS										
	DURING DECEMBER SCALE FORMATION WAS OBSERVED IN THE PIPING AND IN A PUMP OF THE WASTE WATER TREATMENT FACILITY. A WATER WASH LINE WAS INSTALLED FOR THE PIPING AND A PUMP WAS ADDED TO ELIMINATE SCALE. THE FGD SYSTEM OPERATION WAS NOT AFFECTED DURING THIS TIME.										

@BRKPT PRINT$

APPENDIX F
DESIGN AND PERFORMANCE DATA FOR DISCONTINUED DOMESTIC FGD SYSTEMS

COMPANY NAME	ARIZONA PUBLIC SERVICE	
PLANT NAME	FOUR CORNERS	
UNIT NUMBER	5A	
CITY	FARMINGTON	
STATE	NEW MEXICO	
REGULATORY CLASSIFICATION	C	
PARTICULATE EMISSION LIMITATION - NG/J	21.	(.050 LB/MMBTU)
SO2 EMISSION LIMITATION - NG/J	258.	(.600 LB/MMBTU)
NOX EMISSION LIMITATION - NG/J	******	(****** LB/MMBTU)
NET PLANT GENERATING CAPACITY - MW	2089	
GROSS UNIT GENERATING CAPACITY - MW	755	
NET UNIT GENERATING CAPACITY W/FGD - MW	*****	
NET UNIT GENERATING CAPACITY WO/FGD - MW	*****	
EQUIVALENT SCRUBBED CAPACITY - MW	755	
** UNIT DATA - BOILER AND STACK		
BOILER SUPPLIER	******	
BOILER TYPE	PULVERIZED COAL	
BOILER SERVICE LOAD	BASE	
DESIGN BOILER FLUE GAS FLOW - CU.M/S	********	(******* ACFM)
BOILER FLUE GAS TEMPERATURE - C	*******	(**** F)
STACK HEIGHT - M	******	(**** FT)
STACK SHELL	NR	
STACK TOP DIAMETER - M	*******	(***** FT)
** FUEL DATA		
FUEL TYPE	COAL	
FUEL GRADE	SUBBITUMINOUS	
AVERAGE HEAT CONTENT - J/G	22562.	(9700 BTU/LB)
RANGE HEAT CONTENT - BTU/LB		******
AVERAGE ASH CONTENT - %	24.00	
RANGE ASH CONTENT - %	******	
AVERAGE MOISTURE CONTENT - %	11.00	
RANGE MOISTURE CONTENT - %	******	
AVERAGE SULFUR CONTENT - %	.81	
RANGE SULFUR CONTENT - %	******	
AVERAGE CHLORIDE CONTENT - %	********	
RANGE CHLORIDE CONTENT - %	******	
*** PARTICLE CONTROL		
** MECHANICAL COLLECTOR		
NUMBER	0	
TYPE	NONE	
** ESP		
** PARTICLE SCRUBBER		
NUMBER	0	
GENERIC TYPE	NONE	
SPECIFIC TYPE	N/A	
TRADE NAME/COMMON NAME	N/A	
SHELL GENERIC MATERIAL	N/A	
SHELL SPECIFIC MATERIAL	N/A	
LINER GENERIC MATERIAL	N/A	
LINER SPECIFIC MATERIAL	N/A	
GAS CONTACTING DEVICE TYPE	N/A	
*** FGD SYSTEM		
** GENERAL DATA		
SALEABLE PRODUCT/THROWAWAY PRODUCT	THROWAWAY PRODUCT	
SO2 REMOVAL MODE	WET SCRUBBING	
PROCESS TYPE	LIME	
SYSTEM SUPPLIER	SOUTHERN CALIFORNIA EDISON	
A-E FIRM	BECHTEL	
DEVELOPMENT LEVEL	EXPERIMENTAL	
NEW/RETROFIT	RETROFIT	
CURRENT STATUS	8	

ARIZONA PUBLIC SERVICE: FOUR CORNERS 5A (CONT.)

TERMINATION	12/76
INITIAL START-UP	2/76
CONTRACT AWARDED	1/74

** DESIGN AND OPERATING PARAMETERS

** QUENCHER/PRESATURATOR

CONSTRUCTION MATERIAL GENERIC TYPE	NR
CONSTRUCTION MATERIAL SPECIFIC TYPE	NR

** ABSORBER

GENERIC TYPE	SPRAY TOWER
SPECIFIC TYPE	OPEN CROSSCURRENT SPRAY
TRADE NAME/COMMON TYPE	HORIZONTAL SPRAY CHAMBER
DIMENSIONS - FT	60.0 X 28.0 X 17.0
SHELL GENERIC MATERIAL	CARBON STEEL
SHELL SPECIFIC MATERIAL	AISI 1110
SHELL MATERIAL TRADE NAME/COMMON TYPE	N/A
LINER GENERIC MATERIAL	ORGANIC
LINER SPECIFIC MATERIAL	NATURAL RUBBER; GLASS FLAKE-FILLED POLYESTER
LINER MATERIAL TRADE NAME/COMMON TYPE	BLACK NATURAL RUBBER; NR
GAS CONTACTING DEVICE TYPE	NONE
NUMBER OF CONTACTING ZONES	5

** MIST ELIMINATOR

PRE-MIST ELIMINATOR/MIST ELIMINATOR	PRIMARY COLLECTOR
NUMBER PER SYSTEM	1
GENERIC TYPE	IMPINGEMENT
SPECIFIC TYPE	BAFFLE
TRADE NAME/COMMON TYPE	CLOSED VANE
CONSTRUCTION MATERIAL GENERIC TYPE	STAINLESS STEEL; CARBON STEEL
CONSTRUCTION MATERIAL SPECIFIC TYPE	NR

** REHEATER

GENERIC TYPE	INDIRECT HOT AIR
SPECIFIC TYPE	EXTERNAL HEAT EXCHANGER
TRADE NAME/COMMON TYPE	STEAM TUBE BUNDLE
CONSTRUCTION MATERIAL GENERIC TYPE	NR
CONSTRUCTION MATERIAL SPECIFIC TYPE	NR

** FANS

NUMBER	1
DESIGN	CENTRIFUGAL
FUNCTION	BOOSTER
APPLICATION	FORCED DRAFT
SERVICE	NR
CONSTRUCTION MATERIAL GENERIC TYPE	NR

** DAMPERS

FUNCTION	NR
GENERIC TYPE	NR
SPECIFIC TYPE	NR
CONSTRUCTION MATERIAL GENERIC TYPE	NR
CONSTRUCTION MATERIAL SPECIFIC TYPE	NR
LINER GENERIC MATERIAL TYPE	NR
LINER SPECIFIC MATERIAL TYPE	NR

** DUCTWORK

SHELL GENERIC MATERIAL TYPE	NR
SHELL SPECIFIC MATERIAL TYPE	NR
LINER GENERIC MATERIAL TYPE	NR
LINER SPECIFIC MATERIAL TYPE	NR

** REAGENT PREPARATION EQUIPMENT

FUNCTION	SLAKER
DEVICE	DETENTION
DEVICE TYPE	N/A
NUMBER	1

ARIZONA PUBLIC SERVICE: FOUR CORNERS 5A (CONT.)

** PUMPS

SERVICE	NUMBER
SLURRY RECIRCULATION	12

** SOLIDS CONCENTRATING/DEWATERING

DEVICE	THICKENER
NUMBER	1
DIMENSIONS - FT	60.0 DIA
SHELL GENERIC MATERIAL TYPE	CARBON STEEL
OUTLET STREAM CHARACTERISTICS	30% SOLIDS

*** SLUDGE

** TREATMENT

METHOD	NR
DEVICE	NR
PROPRIETARY PROCESS	NR

** DISPOSAL

NATURE	NR
TYPE	NR
SITE TREATMENT	NR

APPENDIX F
DESIGN AND PERFORMANCE DATA FOR DISCONTINUED DOMESTIC FGD SYSTEMS

COMPANY NAME	BOSTON EDISON	
PLANT NAME	MYSTIC	
UNIT NUMBER	6	
CITY	EVERETT	
STATE	MASSACHUSETTS	
REGULATORY CLASSIFICATION	******	
PARTICULATE EMISSION LIMITATION - NG/J	******	(****** LB/MMBTU)
SO2 EMISSION LIMITATION - NG/J	******	(****** LB/MMBTU)
NOX EMISSION LIMITATION - NG/J	******	(****** LB/MMBTU)
NET PLANT GENERATING CAPACITY - MW	*****	
GROSS UNIT GENERATING CAPACITY - MW	150	
NET UNIT GENERATING CAPACITY W/FGD - MW	*****	
NET UNIT GENERATING CAPACITY WO/FGD - MW	*****	
EQUIVALENT SCRUBBED CAPACITY - MW	150	
** UNIT DATA - BOILER AND STACK		
BOILER SUPPLIER	COMBUSTION ENGINEERING	
BOILER TYPE	OIL FIRED	
BOILER SERVICE LOAD	******	
DESIGN BOILER FLUE GAS FLOW - CU.M/S	273.70	(580000 ACFM)
BOILER FLUE GAS TEMPERATURE - C	148.9	(300 F)
STACK HEIGHT - M	99.	(325 FT)
STACK SHELL	NR	
STACK TOP DIAMETER - M	*******	(***** FT)
** FUEL DATA		
FUEL TYPE	OIL	
FUEL GRADE	NO. 6	
AVERAGE HEAT CONTENT - J/G	******	(****** BTU/LB)
RANGE HEAT CONTENT - BTU/LB		******
AVERAGE ASH CONTENT - %	.07	
RANGE ASH CONTENT - %	******	
AVERAGE MOISTURE CONTENT - %	1.00	
RANGE MOISTURE CONTENT - %	******	
AVERAGE SULFUR CONTENT - %	2.00	
RANGE SULFUR CONTENT - %	******	
AVERAGE CHLORIDE CONTENT - %	********	
RANGE CHLORIDE CONTENT - %	******	
*** PARTICLE CONTROL		
** MECHANICAL COLLECTOR		
NUMBER	0	
TYPE	NONE	
** FABRIC FILTER		
NUMBER	0	
TYPE	NONE	
** ESP		
** PARTICLE SCRUBBER		
NUMBER	0	
GENERIC TYPE	NONE	
SPECIFIC TYPE	N/A	
TRADE NAME/COMMON NAME	N/A	
SHELL GENERIC MATERIAL	N/A	
SHELL SPECIFIC MATERIAL	N/A	
LINER GENERIC MATERIAL	N/A	
LINER SPECIFIC MATERIAL	N/A	
GAS CONTACTING DEVICE TYPE	N/A	
*** FGD SYSTEM		
** GENERAL DATA		
SALEABLE PRODUCT/THROWAWAY PRODUCT	SALEABLE PRODUCT	
SO2 REMOVAL MODE	WET SCRUBBING	
PROCESS TYPE	MAGNESIUM OXIDE	
SYSTEM SUPPLIER	GE ENVIRONMENTAL SERVICES	

BOSTON EDISON: MYSTIC 6 (CONT.)

DEVELOPMENT LEVEL	DEMONSTRATION
NEW/RETROFIT	RETROFIT
UNIT DESIGN PARTICLE REMOVAL EFFICIENCY - %	55.00
UNIT DESIGN SO2 REMOVAL EFFICIENCY - %	90.00
CURRENT STATUS	8
TERMINATION	7/74
COMMERCIAL START-UP	4/72
INITIAL START-UP	4/72
CONTRACT AWARDED	0/70

** DESIGN AND OPERATING PARAMETERS

** QUENCHER/PRESATURATOR

CONSTRUCTION MATERIAL GENERIC TYPE	NR
CONSTRUCTION MATERIAL SPECIFIC TYPE	NR

** ABSORBER

NUMBER	1	
GENERIC TYPE	VENTURI TOWER	
SPECIFIC TYPE	VARIABLE-THROAT/TOP-ENTRY PLUMB BOB	
TRADE NAME/COMMON TYPE	N/A	
SHELL GENERIC MATERIAL	CARBON STEEL	
SHELL SPECIFIC MATERIAL	NR	
SHELL MATERIAL TRADE NAME/COMMON TYPE	N/A	
LINER GENERIC MATERIAL	ORGANIC	
LINER SPECIFIC MATERIAL	EPOXY	
LINER MATERIAL TRADE NAME/COMMON TYPE	FLAKELINE E	
GAS CONTACTING DEVICE TYPE	N/A	
NUMBER OF CONTACTING ZONES	1	
LIQUID RECIRCULATION RATE - LITER/S	945.	(15000 GPM)
L/G RATIO - L/CU.M	4.4	(33.0 GAL/1000 ACF)
INLET GAS FLOW - CU. M/S	200.56	(425000 ACFM)
INLET GAS TEMPERATURE - C	148.9	(300 F)

** MIST ELIMINATOR

PRE-MIST ELIMINATOR/MIST ELIMINATOR	PRIMARY COLLECTOR
NUMBER PER SYSTEM	1
GENERIC TYPE	IMPINGEMENT
SPECIFIC TYPE	BAFFLE
TRADE NAME/COMMON TYPE	CLOSED VANE
NUMBER OF PASSES PER STAGE	6
CONSTRUCTION MATERIAL GENERIC TYPE	NR
CONSTRUCTION MATERIAL SPECIFIC TYPE	NR
WASH WATER SOURCE	FRESH

** REHEATER

NUMBER	0
GENERIC TYPE	NONE
SPECIFIC TYPE	N/A
TRADE NAME/COMMON TYPE	N/A
CONSTRUCTION MATERIAL GENERIC TYPE	NONE
CONSTRUCTION MATERIAL SPECIFIC TYPE	N/A

** FANS

NUMBER	2
DESIGN	NR
FUNCTION	NR
APPLICATION	INDUCED DRAFT
SERVICE	NR
CONSTRUCTION MATERIAL GENERIC TYPE	NR

** DAMPERS

FUNCTION	NR
GENERIC TYPE	NR
SPECIFIC TYPE	NR
CONSTRUCTION MATERIAL GENERIC TYPE	NR
CONSTRUCTION MATERIAL SPECIFIC TYPE	NR
LINER GENERIC MATERIAL TYPE	NR
LINER SPECIFIC MATERIAL TYPE	NR

BOSTON EDISON: MYSTIC 6 (CONT.)

** DUCTWORK	
SHELL GENERIC MATERIAL TYPE	NR
SHELL SPECIFIC MATERIAL TYPE	NR
LINER GENERIC MATERIAL TYPE	NR
LINER SPECIFIC MATERIAL TYPE	NR
** REAGENT PREPARATION EQUIPMENT	
FUNCTION	SLAKER
DEVICE	NR
DEVICE TYPE	NR
** SOLIDS CONCENTRATING/DEWATERING	
DEVICE	CENTRIFUGE
NUMBER	1
SHELL GENERIC MATERIAL TYPE	CARBON STEEL
FEED STREAM CHARACTERISTICS	10% SOLIDS
*** SLUDGE	
** TREATMENT	
METHOD	NR
DEVICE	NR
PROPRIETARY PROCESS	NR
** DISPOSAL	
NATURE	N/A
TYPE	NONE
SITE TREATMENT	NR
** PROCESS CONTROL AND INSTRUMENTATION	
CHEMICAL PARAMETERS	PH, FLUE GAS INLET TEMP., SCRUBBER OUTLET TEMP.
CONTROL LEVELS	PH 6.8
MONITOR LOCATION	PH - BLEED LINE FROM ABSORBER TO CENTRIFUGE
PROCESS CONTROL MANNER	MANUAL
PROCESS CHEMISTRY MODE	FEEDBACK
** WATER BALANCE	
WATER LOOP TYPE	CLOSED

APPENDIX F
DESIGN AND PERFORMANCE DATA FOR DISCONTINUED DOMESTIC FGD SYSTEMS

COMPANY NAME	COMMONWEALTH EDISON	
PLANT NAME	POWERTON	
UNIT NUMBER	51	
CITY	PEKIN	
STATE	ILLINOIS	
REGULATORY CLASSIFICATION	E	
PARTICULATE EMISSION LIMITATION - NG/J	43.	(.100 LB/MMBTU)
SO2 EMISSION LIMITATION - NG/J	774.	(1.800 LB/MMBTU)
NOX EMISSION LIMITATION - NG/J	******	(****** LB/MMBTU)
NET PLANT GENERATING CAPACITY - MW	1700	
GROSS UNIT GENERATING CAPACITY - MW	450	
NET UNIT GENERATING CAPACITY W/FGD - MW	400	
NET UNIT GENERATING CAPACITY WO/FGD - MW	425	
EQUIVALENT SCRUBBED CAPACITY - MW	450	
** UNIT DATA - BOILER AND STACK		
BOILER SUPPLIER	BABCOCK & WILCOX	
BOILER TYPE	CYCLONE	
BOILER SERVICE LOAD	BASE	
DESIGN BOILER FLUE GAS FLOW - CU.M/S	722.18	(1530370 ACFM)
BOILER FLUE GAS TEMPERATURE - C	157.2	(315 F)
STACK HEIGHT - M	137.	(450 FT)
STACK SHELL	CONCRETE	
STACK TOP DIAMETER - M	6.4	(21.0 FT)
** FUEL DATA		
FUEL TYPE	COAL	
FUEL GRADE	******	
AVERAGE HEAT CONTENT - J/G	24516.	(10540 BTU/LB)
RANGE HEAT CONTENT - BTU/LB		******
AVERAGE ASH CONTENT - %	9.16	
RANGE ASH CONTENT - %	******	
AVERAGE MOISTURE CONTENT - %	16.34	
RANGE MOISTURE CONTENT - %	******	
AVERAGE SULFUR CONTENT - %	3.53	
RANGE SULFUR CONTENT - %	******	
AVERAGE CHLORIDE CONTENT - %	.20	
RANGE CHLORIDE CONTENT - %	******	
*** PARTICLE CONTROL		
** MECHANICAL COLLECTOR		
NUMBER	0	
TYPE	NONE	
** FABRIC FILTER		
NUMBER	0	
TYPE	NONE	
** ESP		
NUMBER	1	
TYPE	COLD SIDE	
SUPPLIER	RESEARCH-COTTRELL	
INLET FLUE GAS CAPACITY - CU.M/S	722.2	(1530370 ACFM)
INLET FLUE GAS TEMPERATURE - C	157.2	(315 F)
PARTICLE REMOVAL EFFICENCY - %	98.7	
** PARTICLE SCRUBBER		
NUMBER	0	
GENERIC TYPE	NONE	
SPECIFIC TYPE	N/A	
TRADE NAME/COMMON NAME	N/A	
SHELL GENERIC MATERIAL	N/A	
SHELL SPECIFIC MATERIAL	N/A	
LINER GENERIC MATERIAL	N/A	
LINER SPECIFIC MATERIAL	N/A	
GAS CONTACTING DEVICE-TYPE	N/A	

COMMONWEALTH EDISON: POWERTON 51 (CONT.)

*** FGD SYSTEM

** GENERAL DATA

SALEABLE PRODUCT/THROWAWAY PRODUCT	THROWAWAY PRODUCT	
SO2 REMOVAL MODE	WET SCRUBBING	
PROCESS TYPE	LIMESTONE	
SYSTEM SUPPLIER	AIR CORRECTION DIVISION, UOP	
A-E FIRM	SARGENT & LUNDY	
DEVELOPMENT LEVEL	FULL SCALE	
NEW/RETROFIT	RETROFIT	
UNIT DESIGN SO2 REMOVAL EFFICIENCY - %	75.50	
ENERGY CONSUMPTION - %	5.6	
CURRENT STATUS	8	
TERMINATION	5/82	
COMMERCIAL START-UP	6/81	
INITIAL START-UP	4/80	
CONTRACT AWARDED	5/76	

** DESIGN AND OPERATING PARAMETERS

** QUENCHER/PRESATURATOR

CONSTRUCTION MATERIAL GENERIC TYPE	NR	
CONSTRUCTION MATERIAL SPECIFIC TYPE	NR	

** ABSORBER

NUMBER	3	
GENERIC TYPE	PACKED TOWER	
SPECIFIC TYPE	MOBILE BED PACKING	
TRADE NAME/COMMON TYPE	TURBULENT CONTACT ABSORBER	
SUPPLIER	AIR CORRECTION DIVISION, UOP	
DIMENSIONS - FT	55.0 X 30.0 X 18.0	
SHELL GENERIC MATERIAL	CARBON STEEL	
SHELL SPECIFIC MATERIAL	AISI 1110	
SHELL MATERIAL TRADE NAME/COMMON TYPE	N/A	
LINER GENERIC MATERIAL	ORGANIC	
LINER SPECIFIC MATERIAL	SYNTHETIC RUBBER	
LINER MATERIAL TRADE NAME/COMMON TYPE	NEOPRENE LS-576	
GAS CONTACTING DEVICE TYPE	PLASTIC/RUBBER MOBILE BALLS	
NUMBER OF CONTACTING ZONES	3	
LIQUID RECIRCULATION RATE - LITER/S	1575.	(25000 GPM)
L/G RATIO - L/CU.M	6.6	(49.0 GAL/1000 ACF)
GAS-SIDE PRESSURE DROP - KPA	3.0	(12.0 IN-H2O)
SUPERFICAL GAS VELOCITY - M/SEC	3.8	(12.5 FT/S)
INLET GAS FLOW - CU. M/S	240.73	(510123 ACFM)
INLET GAS TEMPERATURE - C	157.2	(315 F)
SO2 REMOVAL EFFICIENCY - %	75.5	

** MIST ELIMINATOR

PRE-MIST ELIMINATOR/MIST ELIMINATOR	PRIMARY COLLECTOR	
NUMBER PER SYSTEM	2	
GENERIC TYPE	IMPINGEMENT	
SPECIFIC TYPE	BAFFLE	
TRADE NAME/COMMON TYPE	CLOSED VANE	
CONFIGURATION	HORIZONTAL	
SUPERFICAL GAS VELOCITY - M/S	2.7	(9.0 FT/S)
CONSTRUCTION MATERIAL GENERIC TYPE	ORGANIC	
CONSTRUCTION MATERIAL SPECIFIC TYPE	FIBER-REINFORCED POLYESTER	

** REHEATER

GENERIC TYPE	INDIRECT HOT AIR	
SPECIFIC TYPE	EXTERNAL HEAT EXCHANGER	
TRADE NAME/COMMON TYPE	STEAM TUBE BUNDLE	
TEMPERATURE INCREASE - C	13.9	(25 F)
INLET FLUE GAS FLOW RATE - CU. M/S	583.28	(1236021 ACFM)
INLET FLUE GAS TEMPERATURE - C	54.4	(130 F)
CONSTRUCTION MATERIAL GENERIC TYPE	NR	
CONSTRUCTION MATERIAL SPECIFIC TYPE	NR	

COMMONWEALTH EDISON: POWERTON 51 (CONT.)

** FANS	
DESIGN	CENTRIFUGAL
SUPPLIER	GREEN FAN
FUNCTION	BOOSTER
APPLICATION	FORCED DRAFT
SERVICE	DRY
CONSTRUCTION MATERIAL GENERIC TYPE	CARBON STEEL
** DAMPERS	
FUNCTION	NR
GENERIC TYPE	NR
SPECIFIC TYPE	NR
CONSTRUCTION MATERIAL GENERIC TYPE	NR
CONSTRUCTION MATERIAL SPECIFIC TYPE	NR
LINER GENERIC MATERIAL TYPE	NR
LINER SPECIFIC MATERIAL TYPE	NR
** DUCTWORK	
SHELL GENERIC MATERIAL TYPE	NR
SHELL SPECIFIC MATERIAL TYPE	NR
LINER GENERIC MATERIAL TYPE	NR
LINER SPECIFIC MATERIAL TYPE	NR
** REAGENT PREPARATION EQUIPMENT	
FUNCTION	WET BALL MILL
DEVICE	COMPARTMENTED
DEVICE TYPE	NR
MANUFACTURER	KOPPERS
NUMBER	2
FULL LOAD DRY FEED CAPACITY - M.TONS/HR	20.0 (22 TPH)

** TANKS

SERVICE	NUMBER
ABSORBER RECYCLE	3
REAGENT PREP PRODUCT	3
MIST ELIMINATOR WASH	1
WASTE SLURRY BLEED	2
THICKENER OVERFLOW	1

** PUMPS

SERVICE	NUMBER
RECLAIMED WATER TRANSFER	2
WASTE SLURRY TRANSFER	2
FILTRATE TRANSFER	3
CONDENSATE RETURN	2
SERVICE WATER BOOSTER	2
FILTERED WATER BOOSTER	2
SURGE POND RECOVERY	3
SLURRY RECIRCULATION	9
REACTANT FEED	2
DEMISTER WASH	2
WASTE SLURRY	2
SLURRY TRANSFER	4

** SOLIDS CONCENTRATING/DEWATERING	
DEVICE	VACUUM FILTER
NUMBER	3
NUMBER OF SPARES	1
SHELL GENERIC MATERIAL TYPE	CARBON STEEL
OUTLET STREAM CHARACTERISTICS	55% SOLIDS
** SOLIDS CONCENTRATING/DEWATERING	
DEVICE	THICKENER
NUMBER	1
DIMENSIONS - FT	170.0 DIA X 10.0
SHELL GENERIC MATERIAL TYPE	CARBON STEEL
OUTLET STREAM CHARACTERISTICS	35% SOLIDS

COMMONWEALTH EDISON: POWERTON 51 (CONT.)

*** SLUDGE

** TREATMENT

METHOD	FIXATION
DEVICE	PUG MILL
PROPRIETARY PROCESS	CONVERSION SYSTEMS [POZ-O-TEC]
INLET QUALITY - %	35.0

** DISPOSAL

NATURE	FINAL
TYPE	POND
SITE TREATMENT	NONE

** DISPOSAL

NATURE	INTERIM
TYPE	POND
LOCATION	ON-SITE
SITE TREATMENT	CLAY LINING
SITE CAPACITY - CU.M	122300 (100.0 ACRE-FT)

** PROCESS CONTROL AND INSTRUMENTATION

CHEMICAL PARAMETERS	SO2, GAS FLOW, PH
PROCESS CONTROL MANNER	AUTOMATIC
PROCESS CHEMISTRY MODE	FEEDBACK/FEED FORWARD

** WATER BALANCE

WATER LOOP TYPE	CLOSED
MAKEUP WATER ADDITION - LITERS/S	35.3 (560 GPM)

APPENDIX F
DESIGN AND PERFORMANCE DATA FOR DISCONTINUED DOMESTIC FGD SYSTEMS

COMPANY NAME	COMMONWEALTH EDISON	
PLANT NAME	WILL COUNTY	
UNIT NUMBER	1A	
CITY	ROMEOVILLE	
STATE	ILLINOIS	
REGULATORY CLASSIFICATION	E	
PARTICULATE EMISSION LIMITATION - NG/J	86.	(.200 LB/MMBTU)
SO2 EMISSION LIMITATION - NG/J	774.	(1.800 LB/MMBTU)
NOX EMISSION LIMITATION - NG/J	******	(****** LB/MMBTU)
NET PLANT GENERATING CAPACITY - MW	1147	
GROSS UNIT GENERATING CAPACITY - MW	167	
NET UNIT GENERATING CAPACITY W/FGD - MW	137	
NET UNIT GENERATING CAPACITY WO/FGD - MW	144	
EQUIVALENT SCRUBBED CAPACITY - MW	167	
** UNIT DATA - BOILER AND STACK		
BOILER SUPPLIER	BABCOCK & WILCOX	
BOILER TYPE	CYCLONE	
BOILER SERVICE LOAD	CYCLING	
DESIGN BOILER FLUE GAS FLOW - CU.M/S	363.36	(770000 ACFM)
BOILER FLUE GAS TEMPERATURE - C	179.4	(355 F)
STACK HEIGHT - M	107.	(350 FT)
STACK SHELL	NR	
STACK TOP DIAMETER - M	3.8	(12.4 FT)
** FUEL DATA		
FUEL TYPE	COAL	
FUEL GRADE	******	
AVERAGE HEAT CONTENT - J/G	22260.	(9570 BTU/LB)
RANGE HEAT CONTENT - BTU/LB		9100-10500
AVERAGE ASH CONTENT - %	7.40	
RANGE ASH CONTENT - %	3.0-16.0	
AVERAGE MOISTURE CONTENT - %	********	
RANGE MOISTURE CONTENT - %	******	
AVERAGE SULFUR CONTENT - %	1.50	
RANGE SULFUR CONTENT - %	0.3-4.5	
AVERAGE CHLORIDE CONTENT - %	********	
RANGE CHLORIDE CONTENT - %	******	
*** PARTICLE CONTROL		
** MECHANICAL COLLECTOR		
NUMBER	0	
TYPE	NONE	
** FABRIC FILTER		
NUMBER	0	
TYPE	NONE	
** ESP		
NUMBER	1	
TYPE	COLD SIDE	
SUPPLIER	WESTERN PREC. DIVISION, JOY	
INLET FLUE GAS TEMPERATURE - C	179.4	(355 F)
PARTICLE REMOVAL EFFICENCY - %	90.0	
** PARTICLE SCRUBBER		
NUMBER	2	
INITIAL START-UP DATE	4/72	
GENERIC TYPE	VENTURI TOWER	
SPECIFIC TYPE	VARIABLE-THROAT/SIDE-MOVABLE BLADES	
TRADE NAME/COMMON NAME	N/A	
SUPPLIER	BABCOCK & WILCOX	
DIMENSIONS - FT	8.0 X 26.0 X 16.0	
SHELL GENERIC MATERIAL	CARBON STEEL	
SHELL SPECIFIC MATERIAL	AISI 1110	
LINER GENERIC MATERIAL	ORGANIC; INORGANIC	
LINER SPECIFIC MATERIAL	INERT FLAKE-FILLED VINYL ESTER; HYDRAULICALLY-BO	
GAS CONTACTING DEVICE TYPE	NONE	

COMMONWEALTH EDISON: WILL COUNTY 1A (CONT.)

LIQUID RECIRCULATION RATE - LITER/S	365.4	(5800 GPM)
L/G RATIO - LITER/CU.M	2.4	(18.0 GAL/1000ACF)
PRESSURE DROP - KPA	2.2	(9.0 IN-H2O)
SUPERFICIAL GAS VELOCITY - M/S	36.6	(120.0 FT/S)
INLET GAS FLOW RATE - CU.M/S	181.7	(385000 ACFM)
INLET GAS TEMPERATURE - C	179.4	(355 F)
PARTICLE REMOVAL EFFICIENCY - %	98.0	

*** FGD SYSTEM

** GENERAL DATA

SALEABLE PRODUCT/THROWAWAY PRODUCT	THROWAWAY PRODUCT
SO2 REMOVAL MODE	WET SCRUBBING
PROCESS TYPE	LIMESTONE
SYSTEM SUPPLIER	BABCOCK & WILCOX
A-E FIRM	BECHTEL
DEVELOPMENT LEVEL	FULL SCALE
NEW/RETROFIT	RETROFIT
UNIT DESIGN PARTICLE REMOVAL EFFICIENCY - %	98.00
UNIT DESIGN SO2 REMOVAL EFFICIENCY - %	76.00
ENERGY CONSUMPTION - %	4.2
CURRENT STATUS	8
TERMINATION	7/77
COMMERCIAL START-UP	2/73
INITIAL START-UP	2/72
CONTRACT AWARDED	2/71

** DESIGN AND OPERATING PARAMETERS

** QUENCHER/PRESATURATOR

CONSTRUCTION MATERIAL GENERIC TYPE	NR
CONSTRUCTION MATERIAL SPECIFIC TYPE	NR

** ABSORBER

NUMBER	2	
GENERIC TYPE	TRAY TOWER	
SPECIFIC TYPE	SIEVE TRAY	
TRADE NAME/COMMON TYPE	N/A	
SUPPLIER	BABCOCK & WILCOX	
DIMENSIONS - FT	16.0 X 24.0 X 60.0	
SHELL GENERIC MATERIAL	CARBON STEEL	
SHELL SPECIFIC MATERIAL	HIGH STRENGTH LOW ALLOY (HSLA)	
SHELL MATERIAL TRADE NAME/COMMON TYPE	COR-TEN	
LINER GENERIC MATERIAL	ORGANIC	
LINER SPECIFIC MATERIAL	NATURAL RUBBER	
LINER MATERIAL TRADE NAME/COMMON TYPE	BLACK NATURAL RUBBER	
GAS CONTACTING DEVICE TYPE	PERFORATED TRAYS	
NUMBER OF CONTACTING ZONES	2	
LIQUID RECIRCULATION RATE - LITER/S	693.	(11000 GPM)
L/G RATIO - L/CU.M	4.7	(35.0 GAL/1000 ACF)
GAS-SIDE PRESSURE DROP - KPA	2.5	(10.0 IN-H2O)
SUPERFICAL GAS VELOCITY - M/SEC	3.0	(10.0 FT/S)
INLET GAS FLOW - CU. M/S	181.68	(385000 ACFM)
INLET GAS TEMPERATURE - C	179.4	(355 F)
PARTICLE REMOVAL EFFICENCY - %	76.0	

** MIST ELIMINATOR

PRE-MIST ELIMINATOR/MIST ELIMINATOR	PRIMARY COLLECTOR	
NUMBER PER SYSTEM	2	
GENERIC TYPE	IMPINGEMENT	
SPECIFIC TYPE	BAFFLE	
TRADE NAME/COMMON TYPE	CLOSED VANE	
CONFIGURATION	HORIZONTAL	
NUMBER OF STAGES	2	
NUMBER OF PASSES PER STAGE	3	
FREEBOARD DISTANCE - M	3.05	(10.0 FT)
DISTANCE BETWEEN VANES - CM	3.8	(1.50 IN)
VANE ANGLES - DEGREES	45	
PRESSURE DROP - KPA	.2	(1.0 IN-H2O)
CONSTRUCTION MATERIAL GENERIC TYPE	ORGANIC	
CONSTRUCTION MATERIAL SPECIFIC TYPE	FIBER-REINFORCED POLYESTER	

COMMONWEALTH EDISON: WILL COUNTY 1A (CONT.)

WASH WATER SOURCE	BLENDED
WASH FREQUENCY	UNDERSPRAY-CONTINUOUS; OVERSPRAY-INTERMITTENT
WASH RATE - L/S	71.0 (1125 GAL/MIN)
**** REHEATER**	
NUMBER	2
GENERIC TYPE	IN-LINE
SPECIFIC TYPE	STEAM
TRADE NAME/COMMON TYPE	NR
TEMPERATURE INCREASE - C	28.9 (52 F)
INLET FLUE GAS FLOW RATE - CU. M/S	179.32 (380000 ACFM)
INLET FLUE GAS TEMPERATURE - C	53.3 (128 F)
CONSTRUCTION MATERIAL GENERIC TYPE	STAINLESS STEEL
CONSTRUCTION MATERIAL SPECIFIC TYPE	AUSTENITIC
**** FANS**	
NUMBER	2
DESIGN	CENTRIFUGAL
FUNCTION	BOOSTER
APPLICATION	INDUCED DRAFT
SERVICE	DRY
FLUE GAS TEMPERATURE - C	82.2 (180 F)
CONSTRUCTION MATERIAL GENERIC TYPE	CARBON STEEL
**** DAMPERS**	
FUNCTION	NR
GENERIC TYPE	NR
SPECIFIC TYPE	NR
CONSTRUCTION MATERIAL GENERIC TYPE	NR
CONSTRUCTION MATERIAL SPECIFIC TYPE	NR
LINER GENERIC MATERIAL TYPE	NR
LINER SPECIFIC MATERIAL TYPE	NR
**** DUCTWORK**	
SHELL GENERIC MATERIAL TYPE	NR
SHELL SPECIFIC MATERIAL TYPE	NR
LINER GENERIC MATERIAL TYPE	NR
LINER SPECIFIC MATERIAL TYPE	NR
**** REAGENT PREPARATION EQUIPMENT**	
FUNCTION	WET BALL MILL
DEVICE	COMPARTMENTED
DEVICE TYPE	NR
NUMBER	2
FULL LOAD DRY FEED CAPACITY - M.TONS/HR	10.9 (12 TPH)
PRODUCT QUALITY - % SOLIDS	27.5
**** TANKS**	

SERVICE	NUMBER
SCRUBBER RECYCLE	2

**** PUMPS**

SERVICE	NUMBER
VENTURI RECIRCULATION	6
ABSORBER RECIRCULATION	8

**** SOLIDS CONCENTRATING/DEWATERING**	
DEVICE	THICKENER
NUMBER	1
CONFIGURATION	CIRCULAR, SLOPED BOTTOM
DIMENSIONS - FT	65.0 DIA X 15.0
**** SOLIDS CONCENTRATING/DEWATERING**	
DEVICE	VACUUM FILTER
NUMBER	1
CAPACITY	90TON/DAY

COMMONWEALTH EDISON: WILL COUNTY 1A (CONT.)

*** SLUDGE

** TREATMENT	
METHOD	FIXATION
DEVICE	PUG MILL
PROPRIETARY PROCESS	CHICAGO ADMIXTURES
** DISPOSAL	
NATURE	INTERIM
TYPE	POND
LOCATION	ON-SITE
SITE TREATMENT	CLAY LINING
** DISPOSAL	
NATURE	FINAL
TYPE	LANDFILL
LOCATION	OFF-SITE
SITE TRANSPORTATION METHOD	TRUCK
** PROCESS CONTROL AND INSTRUMENTATION	
CHEMICAL PARAMETERS	PRESSURE, LIMESTONE FEED, PH
PROCESS CONTROL MANNER	AUTOMATIC
** WATER BALANCE	
WATER LOOP TYPE	CLOSED

APPENDIX F
DESIGN AND PERFORMANCE DATA FOR DISCONTINUED DOMESTIC FGD SYSTEMS

COMPANY NAME	DAIRYLAND POWER	
PLANT NAME	ALMA	
UNIT NUMBER	5	
CITY	ALMA	
STATE	WISCONSIN	
REGULATORY CLASSIFICATION	******	
PARTICULATE EMISSION LIMITATION - NG/J	******	(****** LB/MMBTU)
SO2 EMISSION LIMITATION - NG/J	******	(****** LB/MMBTU)
NOX EMISSION LIMITATION - NG/J	******	(****** LB/MMBTU)
NET PLANT GENERATING CAPACITY - MW	210	
GROSS UNIT GENERATING CAPACITY - MW	80	
NET UNIT GENERATING CAPACITY W/FGD - MW	*****	
NET UNIT GENERATING CAPACITY WO/FGD - MW	*****	
EQUIVALENT SCRUBBED CAPACITY - MW	80	
** UNIT DATA - BOILER AND STACK		
BOILER SUPPLIER	******	
BOILER TYPE	******	
BOILER SERVICE LOAD	******	
DESIGN BOILER FLUE GAS FLOW - CU.M/S	********	(******* ACFM)
BOILER FLUE GAS TEMPERATURE - C	*******	(**** F)
STACK HEIGHT - M	******	(**** FT)
STACK SHELL	NR	
STACK TOP DIAMETER - M	*******	(***** FT)
** FUEL DATA		
FUEL TYPE	COAL	
FUEL GRADE	******	
AVERAGE HEAT CONTENT - J/G	******	(****** BTU/LB)
RANGE HEAT CONTENT - BTU/LB		10500-11000
AVERAGE ASH CONTENT - %	********	
RANGE ASH CONTENT - %	12.0-20.0	
AVERAGE MOISTURE CONTENT - %	********	
RANGE MOISTURE CONTENT - %	3.0-3.5	
AVERAGE SULFUR CONTENT - %	********	
RANGE SULFUR CONTENT - %	******	
AVERAGE CHLORIDE CONTENT - %	********	
RANGE CHLORIDE CONTENT - %	******	
*** PARTICLE CONTROL		
** ESP		
NUMBER	1	
** PARTICLE SCRUBBER		
NUMBER	0	
GENERIC TYPE	NONE	
SPECIFIC TYPE	N/A	
TRADE NAME/COMMON NAME	N/A	
SHELL GENERIC MATERIAL	N/A	
SHELL SPECIFIC MATERIAL	N/A	
LINER GENERIC MATERIAL	N/A	
LINER SPECIFIC MATERIAL	N/A	
GAS CONTACTING DEVICE TYPE	N/A	
*** FGD SYSTEM		
** GENERAL DATA		
SALEABLE PRODUCT/THROWAWAY PRODUCT	THROWAWAY PRODUCT	
SO2 REMOVAL MODE	WET SCRUBBING	
PROCESS TYPE	LIME	
SYSTEM SUPPLIER	FOSTER WHEELER	
DEVELOPMENT LEVEL	EXPERIMENTAL	
NEW/RETROFIT	RETROFIT	
UNIT DESIGN SO2 REMOVAL EFFICIENCY - %	32.50	
CURRENT STATUS	8	
TERMINATION	8/74	
COMMERCIAL START-UP	6/71	
INITIAL START-UP	6/71	

DAIRYLAND POWER: ALMA 5 (CONT.)

** DESIGN AND OPERATING PARAMETERS

** QUENCHER/PRESATURATOR	
CONSTRUCTION MATERIAL GENERIC TYPE	NR
CONSTRUCTION MATERIAL SPECIFIC TYPE	NR
** ABSORBER	
GENERIC TYPE	NR
SPECIFIC TYPE	NR
TRADE NAME/COMMON TYPE	NR
SHELL GENERIC MATERIAL	NR
SHELL SPECIFIC MATERIAL	NR
SHELL MATERIAL TRADE NAME/COMMON TYPE	NR
LINER GENERIC MATERIAL	NR
LINER SPECIFIC MATERIAL	NR
LINER MATERIAL TRADE NAME/COMMON TYPE	NR
** MIST ELIMINATOR	
PRE-MIST ELIMINATOR/MIST ELIMINATOR	NR
GENERIC TYPE	NR
SPECIFIC TYPE	NR
TRADE NAME/COMMON TYPE	NR
CONSTRUCTION MATERIAL GENERIC TYPE	NR
CONSTRUCTION MATERIAL SPECIFIC TYPE	NR
** REHEATER	
GENERIC TYPE	NR
SPECIFIC TYPE	NR
TRADE NAME/COMMON TYPE	NR
CONSTRUCTION MATERIAL GENERIC TYPE	NR
CONSTRUCTION MATERIAL SPECIFIC TYPE	NR
** FANS	
DESIGN	NR
FUNCTION	NR
APPLICATION	NR
SERVICE	NR
CONSTRUCTION MATERIAL GENERIC TYPE	NR
** DAMPERS	
FUNCTION	NR
GENERIC TYPE	NR
SPECIFIC TYPE	NR
CONSTRUCTION MATERIAL GENERIC TYPE	NR
CONSTRUCTION MATERIAL SPECIFIC TYPE	NR
LINER GENERIC MATERIAL TYPE	NR
LINER SPECIFIC MATERIAL TYPE	NR
** DUCTWORK	
SHELL GENERIC MATERIAL TYPE	NR
SHELL SPECIFIC MATERIAL TYPE	NR
LINER GENERIC MATERIAL TYPE	NR
LINER SPECIFIC MATERIAL TYPE	NR
** REAGENT PREPARATION EQUIPMENT	
FUNCTION	SLAKER
DEVICE	NR
DEVICE TYPE	NR

** TANKS

SERVICE	NUMBER
NR	****

** PUMPS

SERVICE	NUMBER
NR	****

DAIRYLAND POWER: ALMA 5 (CONT.)

** SOLIDS CONCENTRATING/DEWATERING	
DEVICE	NA
*** SLUDGE	
** TREATMENT	
METHOD	NA
DEVICE	NA
PROPRIETARY PROCESS	NA
** DISPOSAL	
NATURE	NR
TYPE	NR

APPENDIX F
DESIGN AND PERFORMANCE DATA FOR DISCONTINUED DOMESTIC FGD SYSTEMS

COMPANY NAME	DETROIT EDISON	
PLANT NAME	ST. CLAIR	
UNIT NUMBER	6A	
CITY	BELLE RIVER	
STATE	MICHIGAN	
REGULATORY CLASSIFICATION	A	
PARTICULATE EMISSION LIMITATION - NG/J	86.	(.200 LB/MMBTU)
SO2 EMISSION LIMITATION - NG/J	1376.	(3.200 LB/MMBTU)
NOX EMISSION LIMITATION - NG/J	******	(****** LB/MMBTU)
NET PLANT GENERATING CAPACITY - MW	1798	
GROSS UNIT GENERATING CAPACITY - MW	325	
NET UNIT GENERATING CAPACITY W/FGD - MW	154	
NET UNIT GENERATING CAPACITY WO/FGD - MW	163	
EQUIVALENT SCRUBBED CAPACITY - MW	163	
** UNIT DATA - BOILER AND STACK		
BOILER SUPPLIER	COMBUSTION ENGINEERING	
BOILER TYPE	******	
BOILER SERVICE LOAD	PEAK	
DESIGN BOILER FLUE GAS FLOW - CU.M/S	465.77	(987000 ACFM)
BOILER FLUE GAS TEMPERATURE - C	132.2	(270 F)
STACK HEIGHT - M	130.	(425 FT)
STACK SHELL	NR	
STACK TOP DIAMETER - M	*******	(***** FT)
** FUEL DATA		
FUEL TYPE	COAL	
FUEL GRADE	SUBBITUMINOUS	
AVERAGE HEAT CONTENT - J/G	22330.	(9600 BTU/LB)
RANGE HEAT CONTENT - BTU/LB		9500-9600
AVERAGE ASH CONTENT - %	4.00	
RANGE ASH CONTENT - %	3.0-4.0	
AVERAGE MOISTURE CONTENT - %	22.60	
RANGE MOISTURE CONTENT - %	22.0-24.0	
AVERAGE SULFUR CONTENT - %	.35	
RANGE SULFUR CONTENT - %	0.3-0.4	
AVERAGE CHLORIDE CONTENT - %	********	
RANGE CHLORIDE CONTENT - %	******	
*** PARTICLE CONTROL		
** MECHANICAL COLLECTOR		
NUMBER	0	
TYPE	NONE	
** FABRIC FILTER		
NUMBER	0	
TYPE	NONE	
** ESP		
NUMBER	2	
SUPPLIER	WHEELABRATOR-FRYE	
PARTICLE REMOVAL EFFICENCY - %	90.0	
** PARTICLE SCRUBBER		
NUMBER	2	
INITIAL START-UP DATE	9/75	
GENERIC TYPE	VENTURI TOWER	
SPECIFIC TYPE	VARIABLE-THROAT/ADJUSTABLE DRUM	
TRADE NAME/COMMON NAME	RADIAL FLOW VENTURI	
SUPPLIER	PEABODY-LURGI	
SHELL GENERIC MATERIAL	STAINLESS STEEL	
SHELL SPECIFIC MATERIAL	AUSTENITIC	
LINER GENERIC MATERIAL	ORGANIC	
LINER SPECIFIC MATERIAL	NATURAL RUBBER	
GAS CONTACTING DEVICE TYPE	NONE	
LIQUID RECIRCULATION RATE - LITER/S	278.5	(4420 GPM)
L/G RATIO - LITER/CU.M	2.7	(20.0 GAL/1000ACF)
PRESSURE DROP - KPA	3.5	(14.0 IN-H2O)

DETROIT EDISON: ST. CLAIR 6A (CONT.)

SUPERFICIAL GAS VELOCITY - M/S	28.3	(93.0 FT/S)
INLET GAS FLOW RATE - CU.M/S	116.6	(247000 ACFM)
INLET GAS TEMPERATURE - C	132.2	(270 F)

*** FGD SYSTEM

** GENERAL DATA

SALEABLE PRODUCT/THROWAWAY PRODUCT	THROWAWAY PRODUCT
SO2 REMOVAL MODE	WET SCRUBBING
PROCESS TYPE	LIMESTONE
SYSTEM SUPPLIER	PEABODY PROCESS SYSTEMS
A-E FIRM	BECHTEL
DEVELOPMENT LEVEL	DEMONSTRATION
NEW/RETROFIT	RETROFIT
UNIT DESIGN PARTICLE REMOVAL EFFICIENCY - %	99.70
UNIT DESIGN SO2 REMOVAL EFFICIENCY - %	90.00
ENERGY CONSUMPTION - %	2.8
CURRENT STATUS	8
TERMINATION	12/76
COMMERCIAL START-UP	9/75
INITIAL START-UP	6/75
CONTRACT AWARDED	0/71

** DESIGN AND OPERATING PARAMETERS

** QUENCHER/PRESATURATOR

CONSTRUCTION MATERIAL GENERIC TYPE	NR
CONSTRUCTION MATERIAL SPECIFIC TYPE	NR

** ABSORBER

NUMBER	2	
GENERIC TYPE	SPRAY TOWER	
SPECIFIC TYPE	OPEN COUNTERCURRENT SPRAY	
TRADE NAME/COMMON TYPE	N/A	
SUPPLIER	PEABODY PROCESS SYSTEMS	
SHELL GENERIC MATERIAL	STAINLESS STEEL	
SHELL SPECIFIC MATERIAL	AUSTENITIC	
SHELL MATERIAL TRADE NAME/COMMON TYPE	TYPE 316L	
LINER GENERIC MATERIAL	NONE	
LINER SPECIFIC MATERIAL	N/A	
LINER MATERIAL TRADE NAME/COMMON TYPE	N/A	
GAS CONTACTING DEVICE TYPE	NONE	
L/G RATIO - L/CU.M	10.7	(80.0 GAL/1000 ACF)
GAS-SIDE PRESSURE DROP - KPA	2.5	(10.0 IN-H2O)
SUPERFICAL GAS VELOCITY - M/SEC	2.9	(9.5 FT/S)
INLET GAS FLOW - CU. M/S	101.46	(215000 ACFM)
INLET GAS TEMPERATURE - C	47.8	(118 F)
SO2 REMOVAL EFFICIENCY - %	90.0	

** MIST ELIMINATOR

PRE-MIST ELIMINATOR/MIST ELIMINATOR	PRIMARY COLLECTOR	
NUMBER PER SYSTEM	2	
GENERIC TYPE	CENTRIFUGAL	
SPECIFIC TYPE	RADIAL VANE	
TRADE NAME/COMMON TYPE	RADIAL BAFFLE	
CONFIGURATION	HORIZONTAL	
FREEBOARD DISTANCE - M	1.37	(4.5 FT)
DISTANCE BETWEEN VANES - CM	20.3	(8.00 IN)
VANE ANGLES - DEGREES	45	
PRESSURE DROP - KPA	.0	(.2 IN-H2O)
SUPERFICAL GAS VELOCITY - M/S	3.0	(10.0 FT/S)
CONSTRUCTION MATERIAL GENERIC TYPE	STAINLESS STEEL	
CONSTRUCTION MATERIAL SPECIFIC TYPE	AUSTENITIC	

** REHEATER

NUMBER	1	
GENERIC TYPE	DIRECT COMBUSTION	
SPECIFIC TYPE	EXTERNAL COMBUSTION CHAMBER	
TRADE NAME/COMMON TYPE	OIL	
PERCENT GAS BYPASSED - AVG	.0	
TEMPERATURE INCREASE - C	27.8	(50 F)

DETROIT EDISON: ST. CLAIR 6A (CONT.)

INLET FLUE GAS FLOW RATE - CU. M/S	187.20	(396700 ACFM)
INLET FLUE GAS TEMPERATURE - C	50.0	(122 F)
CONSTRUCTION MATERIAL GENERIC TYPE	NR	
CONSTRUCTION MATERIAL SPECIFIC TYPE	NR	

** FANS

NUMBER	1
SUPPLIER	PEABODY PROCESS SYSTEMS
FUNCTION	BOOSTER
APPLICATION	INDUCED DRAFT
SERVICE	WET
CONSTRUCTION MATERIAL GENERIC TYPE	STAINLESS STEEL

** DAMPERS

FUNCTION	NR
GENERIC TYPE	NR
SPECIFIC TYPE	NR
CONSTRUCTION MATERIAL GENERIC TYPE	NR
CONSTRUCTION MATERIAL SPECIFIC TYPE	NR
LINER GENERIC MATERIAL TYPE	NR
LINER SPECIFIC MATERIAL TYPE	NR

** DUCTWORK

SHELL GENERIC MATERIAL TYPE	NR
SHELL SPECIFIC MATERIAL TYPE	NR
LINER GENERIC MATERIAL TYPE	NR
LINER SPECIFIC MATERIAL TYPE	NR

** REAGENT PREPARATION EQUIPMENT

FUNCTION	NONE
DEVICE	N/A
DEVICE TYPE	N/A
NUMBER	1
PRODUCT QUALITY - % SOLIDS	35.0

** PUMPS

SERVICE	NUMBER
VENTURI RECIRCULATION	3
SPRAY TOWER RECIRCULATION	6

** SOLIDS CONCENTRATING/DEWATERING

DEVICE	NONE
NUMBER	0

*** SLUDGE

** TREATMENT

METHOD	BLEED
DEVICE	N/A
PROPRIETARY PROCESS	N/A

** DISPOSAL

NATURE	FINAL
TYPE	POND
SITE TRANSPORTATION METHOD	PIPELINE
SITE TREATMENT	NONE
SITE SERVICE LIFE - YRS	1

** PROCESS CONTROL AND INSTRUMENTATION

CHEMICAL PARAMETERS	PH, SOLIDS
CONTROL LEVELS	PH 5.8-6.0; SOLIDS 15%
MONITOR LOCATION	RECYCLE TANK
PROCESS CONTROL MANNER	AUTOMATIC
PROCESS CHEMISTRY MODE	FEEDBACK

** WATER BALANCE

WATER LOOP TYPE	OPEN

APPENDIX F
DESIGN AND PERFORMANCE DATA FOR DISCONTINUED DOMESTIC FGD SYSTEMS

COMPANY NAME	GULF POWER	
PLANT NAME	SCHOLZ	
UNIT NUMBER	1	
CITY	SNEADS	
STATE	FLORIDA	
REGULATORY CLASSIFICATION	E	
PARTICULATE EMISSION LIMITATION - NG/J	******	(****** LB/MMBTU)
SO2 EMISSION LIMITATION - NG/J	******	(****** LB/MMBTU)
NOX EMISSION LIMITATION - NG/J	******	(****** LB/MMBTU)
NET PLANT GENERATING CAPACITY - MW	80	
GROSS UNIT GENERATING CAPACITY - MW	20	
NET UNIT GENERATING CAPACITY W/FGD - MW	*****	
NET UNIT GENERATING CAPACITY WO/FGD - MW	*****	
EQUIVALENT SCRUBBED CAPACITY - MW	20	
** UNIT DATA - BOILER AND STACK		
BOILER SUPPLIER	BABCOCK & WILCOX	
BOILER TYPE	PULVERIZED COAL	
BOILER SERVICE LOAD	BASE	
DESIGN BOILER FLUE GAS FLOW - CU.M/S	50.02	(106000 ACFM)
BOILER FLUE GAS TEMPERATURE - C	*******	(**** F)
STACK HEIGHT - M	******	(**** FT)
STACK SHELL	NR	
STACK TOP DIAMETER - M	*******	(***** FT)
** FUEL DATA		
FUEL TYPE	COAL	
FUEL GRADE	******	
AVERAGE HEAT CONTENT - J/G	30005.	(12900 BTU/LB)
RANGE HEAT CONTENT - BTU/LB		******
AVERAGE ASH CONTENT - %	********	
RANGE ASH CONTENT - %	******	
AVERAGE MOISTURE CONTENT - %	********	
RANGE MOISTURE CONTENT - %	******	
AVERAGE SULFUR CONTENT - %	3.25	
RANGE SULFUR CONTENT - %	3.0-3.5	
AVERAGE CHLORIDE CONTENT - %	********	
RANGE CHLORIDE CONTENT - %	******	
*** PARTICLE CONTROL		
** ESP		
NUMBER	1	
** PARTICLE SCRUBBER		
GENERIC TYPE	NR	
SPECIFIC TYPE	NR	
TRADE NAME/COMMON NAME	NR	
SHELL GENERIC MATERIAL	NR	
SHELL SPECIFIC MATERIAL	NR	
LINER GENERIC MATERIAL	NR	
LINER SPECIFIC MATERIAL	NR	
*** FGD SYSTEM		
** GENERAL DATA		
SALEABLE PRODUCT/THROWAWAY PRODUCT	THROWAWAY PRODUCT	
SO2 REMOVAL MODE	WET SCRUBBING	
PROCESS TYPE	DUAL ALKALI/LIMESTONE	
SYSTEM SUPPLIER	THYSSEN/CEA	
A-E FIRM	A.D. LITTLE	
DEVELOPMENT LEVEL	DEMONSTRATION	
NEW/RETROFIT	RETROFIT	
CURRENT STATUS	8	
TERMINATION	5/81	
INITIAL START-UP	8/80	

GULF POWER: SCHOLZ 1 (CONT.)

** DESIGN AND OPERATING PARAMETERS

** QUENCHER/PRESATURATOR	
CONSTRUCTION MATERIAL GENERIC TYPE	NR
CONSTRUCTION MATERIAL SPECIFIC TYPE	NR
** ABSORBER	
GENERIC TYPE	TRAY TOWER
SPECIFIC TYPE	NR
TRADE NAME/COMMON TYPE	NR
SHELL GENERIC MATERIAL	NR
SHELL SPECIFIC MATERIAL	NR
SHELL MATERIAL TRADE NAME/COMMON TYPE	NR
LINER GENERIC MATERIAL	NR
LINER SPECIFIC MATERIAL	NR
LINER MATERIAL TRADE NAME/COMMON TYPE	NR
** MIST ELIMINATOR	
PRE-MIST ELIMINATOR/MIST ELIMINATOR	NR
GENERIC TYPE	NR
SPECIFIC TYPE	NR
TRADE NAME/COMMON TYPE	NR
CONSTRUCTION MATERIAL GENERIC TYPE	NR
CONSTRUCTION MATERIAL SPECIFIC TYPE	NR
** REHEATER	
GENERIC TYPE	INDIRECT HOT AIR
SPECIFIC TYPE	NR
TRADE NAME/COMMON TYPE	NR
TEMPERATURE INCREASE - C	22.2 (40 F)
CONSTRUCTION MATERIAL GENERIC TYPE	NR
CONSTRUCTION MATERIAL SPECIFIC TYPE	NR
** FANS	
DESIGN	CENTRIFUGAL
FUNCTION	BOOSTER
APPLICATION	INDUCED DRAFT
SERVICE	WET
CONSTRUCTION MATERIAL GENERIC TYPE	NR
** DAMPERS	
FUNCTION	NR
GENERIC TYPE	NR
SPECIFIC TYPE	NR
CONSTRUCTION MATERIAL GENERIC TYPE	NR
CONSTRUCTION MATERIAL SPECIFIC TYPE	NR
LINER GENERIC MATERIAL TYPE	NR
LINER SPECIFIC MATERIAL TYPE	NR
** DUCTWORK	
SHELL GENERIC MATERIAL TYPE	NR
SHELL SPECIFIC MATERIAL TYPE	NR
LINER GENERIC MATERIAL TYPE	NR
LINER SPECIFIC MATERIAL TYPE	NR
** REAGENT PREPARATION EQUIPMENT	
FUNCTION	NR
DEVICE	NR
DEVICE TYPE	NR

SERVICE	NUMBER
NR	****

** SOLIDS CONCENTRATING/DEWATERING	
DEVICE	THICKENER
NUMBER	1
SHELL GENERIC MATERIAL TYPE	CARBON STEEL; ORGANIC [LINING]
SHELL SPECIFIC MATERIAL TYPE	AISI 1110; NR

GULF POWER: SCHOLZ 1 (CONT.)

** SOLIDS CONCENTRATING/DEWATERING	
DEVICE	VACUUM FILTER
NUMBER	1
SHELL SPECIFIC MATERIAL TYPE	FIBERGLASS
FEED STREAM CHARACTERISTICS	20% SOLIDS
*** SLUDGE	
** TREATMENT	
METHOD	DEWATERED
DEVICE	N/A
PROPRIETARY PROCESS	N/A
** DISPOSAL	
NATURE	FINAL
TYPE	POND
SITE TREATMENT	CLAY LINING
** WATER BALANCE	
WATER LOOP TYPE	CLOSED

APPENDIX F
DESIGN AND PERFORMANCE DATA FOR DISCONTINUED DOMESTIC FGD SYSTEMS

COMPANY NAME	GULF POWER	
PLANT NAME	SCHOLZ	
UNIT NUMBER	1A	
CITY	SNEADS	
STATE	FLORIDA	
REGULATORY CLASSIFICATION	A	
PARTICULATE EMISSION LIMITATION - NG/J	******	(****** LB/MMBTU)
SO2 EMISSION LIMITATION - NG/J	516.	(1.200 LB/MMBTU)
NOX EMISSION LIMITATION - NG/J	******	(****** LB/MMBTU)
NET PLANT GENERATING CAPACITY - MW	80	
GROSS UNIT GENERATING CAPACITY - MW	48	
NET UNIT GENERATING CAPACITY W/FGD - MW	40	
NET UNIT GENERATING CAPACITY WO/FGD - MW	*****	
EQUIVALENT SCRUBBED CAPACITY - MW	48	
** UNIT DATA - BOILER AND STACK		
BOILER SUPPLIER	BABCOCK & WILCOX	
BOILER TYPE	PULVERIZED COAL	
BOILER SERVICE LOAD	BASE	
DESIGN BOILER FLUE GAS FLOW - CU.M/S	********	(******* ACFM)
BOILER FLUE GAS TEMPERATURE - C	146.1	(295 F)
STACK HEIGHT - M	******	(**** FT)
STACK SHELL	NR	
STACK TOP DIAMETER - M	*******	(***** FT)
** FUEL DATA		
FUEL TYPE	COAL	
FUEL GRADE	******	
AVERAGE HEAT CONTENT - J/G	******	(****** BTU/LB)
RANGE HEAT CONTENT - BTU/LB		******
AVERAGE ASH CONTENT - %	********	
RANGE ASH CONTENT - %	******	
AVERAGE MOISTURE CONTENT - %	********	
RANGE MOISTURE CONTENT - %	******	
AVERAGE SULFUR CONTENT - %	5.00	
RANGE SULFUR CONTENT - %	******	
AVERAGE CHLORIDE CONTENT - %	********	
RANGE CHLORIDE CONTENT - %	******	
*** PARTICLE CONTROL		
** ESP		
NUMBER	1	
TYPE	COLD SIDE	
SUPPLIER	BUELL DIVISION, ENVIROTECH	
PARTICLE REMOVAL EFFICENCY - %	99.5	
** PARTICLE SCRUBBER		
NUMBER	1	
INITIAL START-UP DATE	2/75	
GENERIC TYPE	VENTURI TOWER	
SPECIFIC TYPE	VARIABLE-THROAT/TOP-ENTRY PLUMB BOB	
TRADE NAME/COMMON NAME	N/A	
SUPPLIER	THYSSEN/CEA	
SHELL GENERIC MATERIAL	CARBON STEEL	
SHELL SPECIFIC MATERIAL	AISI 1110	
LINER GENERIC MATERIAL	INORGANIC	
LINER SPECIFIC MATERIAL	HYDRAULICALLY-BONDED MORTAR	
GAS CONTACTING DEVICE TYPE	NONE	
*** FGD SYSTEM		
** GENERAL DATA		
SALEABLE PRODUCT/THROWAWAY PRODUCT	THROWAWAY PRODUCT	
SO2 REMOVAL MODE	WET SCRUBBING	
PROCESS TYPE	DUAL ALKALI	
SYSTEM SUPPLIER	THYSSEN/CEA	
DEVELOPMENT LEVEL	PROTOTYPE	
NEW/RETROFIT	RETROFIT	

GULF POWER: SCHOLZ 1A (CONT.)

UNIT DESIGN PARTICLE REMOVAL EFFICIENCY - %	99.70
UNIT DESIGN SO2 REMOVAL EFFICIENCY - %	95.00
CURRENT STATUS	8
TERMINATION	7/76
COMMERCIAL START-UP	2/75
INITIAL START-UP	2/75

** DESIGN AND OPERATING PARAMETERS

** QUENCHER/PRESATURATOR

CONSTRUCTION MATERIAL GENERIC TYPE	NR
CONSTRUCTION MATERIAL SPECIFIC TYPE	NR

** ABSORBER

GENERIC TYPE	VENTURI TOWER
SPECIFIC TYPE	NR
TRADE NAME/COMMON TYPE	NR
SUPPLIER	THYSSEN/CEA
SHELL GENERIC MATERIAL	CARBON STEEL
SHELL SPECIFIC MATERIAL	AISI 1110
SHELL MATERIAL TRADE NAME/COMMON TYPE	N/A
LINER GENERIC MATERIAL	ORGANIC
LINER SPECIFIC MATERIAL	GLASS FLAKE-FILLED POLYESTER
LINER MATERIAL TRADE NAME/COMMON TYPE	NR
GAS CONTACTING DEVICE TYPE	NONE

** MIST ELIMINATOR

PRE-MIST ELIMINATOR/MIST ELIMINATOR	NR
GENERIC TYPE	NR
SPECIFIC TYPE	NR
TRADE NAME/COMMON TYPE	NR
CONSTRUCTION MATERIAL GENERIC TYPE	NR
CONSTRUCTION MATERIAL SPECIFIC TYPE	NR

** REHEATER

NUMBER	1
GENERIC TYPE	NR
SPECIFIC TYPE	NR
TRADE NAME/COMMON TYPE	NR
PERCENT GAS BYPASSED - AVG	5.0
CONSTRUCTION MATERIAL GENERIC TYPE	NR
CONSTRUCTION MATERIAL SPECIFIC TYPE	NR

** FANS

DESIGN	NR
FUNCTION	NR
APPLICATION	NR
SERVICE	NR
CONSTRUCTION MATERIAL GENERIC TYPE	NR

** DAMPERS

FUNCTION	NR
GENERIC TYPE	NR
SPECIFIC TYPE	NR
CONSTRUCTION MATERIAL GENERIC TYPE	NR
CONSTRUCTION MATERIAL SPECIFIC TYPE	NR
LINER GENERIC MATERIAL TYPE	NR
LINER SPECIFIC MATERIAL TYPE	NR

** DUCTWORK

SHELL GENERIC MATERIAL TYPE	NR
SHELL SPECIFIC MATERIAL TYPE	NR
LINER GENERIC MATERIAL TYPE	NR
LINER SPECIFIC MATERIAL TYPE	NR

** REAGENT PREPARATION EQUIPMENT

FUNCTION	NR
DEVICE	NR
DEVICE TYPE	NR

GULF POWER: SCHOLZ 1A (CONT.)

** PUMPS	
SERVICE	NUMBER
-------	------
NR	****
** SOLIDS CONCENTRATING/DEWATERING	
DEVICE	VACUUM FILTER
NUMBER	1
CONFIGURATION	ROTARY DRUM
SHELL GENERIC MATERIAL TYPE	INORGANIC
SHELL SPECIFIC MATERIAL TYPE	NR
*** SLUDGE	
** TREATMENT	
METHOD	DEWATERED
DEVICE	N/A
PROPRIETARY PROCESS	N/A
** DISPOSAL	
NATURE	FINAL
TYPE	POND
LOCATION	ON-SITE
SITE TREATMENT	CLAY LINING
** WATER BALANCE	
WATER LOOP TYPE	CLOSED

APPENDIX F
DESIGN AND PERFORMANCE DATA FOR DISCONTINUED DOMESTIC FGD SYSTEMS

COMPANY NAME	GULF POWER	
PLANT NAME	SCHOLZ	
UNIT NUMBER	1B,2B	
CITY	SNEADS	
STATE	FLORIDA	
REGULATORY CLASSIFICATION	A	
PARTICULATE EMISSION LIMITATION - NG/J	******	(****** LB/MMBTU)
SO2 EMISSION LIMITATION - NG/J	516.	(1.200 LB/MMBTU)
NOX EMISSION LIMITATION - NG/J	******	(****** LB/MMBTU)
NET PLANT GENERATING CAPACITY - MW	80	
GROSS UNIT GENERATING CAPACITY - MW	48	
NET UNIT GENERATING CAPACITY W/FGD - MW	40	
NET UNIT GENERATING CAPACITY WO/FGD - MW	*****	
EQUIVALENT SCRUBBED CAPACITY - MW	48	
** UNIT DATA - BOILER AND STACK		
BOILER SUPPLIER	BABCOCK & WILCOX	
BOILER TYPE	PULVERIZED COAL	
BOILER SERVICE LOAD	BASE	
DESIGN BOILER FLUE GAS FLOW - CU.M/S	********	(******* ACFM)
BOILER FLUE GAS TEMPERATURE - C	146.1	(295 F)
STACK HEIGHT - M	23.	(76 FT)
STACK SHELL	FIBER-REINFORCED POLYESTER	
STACK TOP DIAMETER - M	*******	(***** FT)
** FUEL DATA		
FUEL TYPE	COAL	
FUEL GRADE	******	
AVERAGE HEAT CONTENT - J/G	******	(****** BTU/LB)
RANGE HEAT CONTENT - BTU/LB		******
AVERAGE ASH CONTENT - %	********	
RANGE ASH CONTENT - %	******	
AVERAGE MOISTURE CONTENT - %	********	
RANGE MOISTURE CONTENT - %	******	
AVERAGE SULFUR CONTENT - %	5.00	
RANGE SULFUR CONTENT - %	******	
AVERAGE CHLORIDE CONTENT - %	********	
RANGE CHLORIDE CONTENT - %	******	
*** PARTICLE CONTROL		
** ESP		
NUMBER	1	
TYPE	COLD SIDE	
SUPPLIER	BUELL DIVISION, ENVIROTECH	
PARTICLE REMOVAL EFFICENCY - %	99.5	
** PARTICLE SCRUBBER		
NUMBER	1	
INITIAL START-UP DATE	2/75	
GENERIC TYPE	VENTURI TOWER	
SPECIFIC TYPE	VARIABLE-THROAT/TOP-ENTRY PLUMB BOB	
TRADE NAME/COMMON NAME	N/A	
SUPPLIER	CHIYODA INTERNATIONAL	
SHELL GENERIC MATERIAL	CARBON STEEL	
SHELL SPECIFIC MATERIAL	AISI 1110	
LINER GENERIC MATERIAL	INORGANIC	
LINER SPECIFIC MATERIAL	HYDRAULICALLY-BONDED MORTAR	
GAS CONTACTING DEVICE TYPE	NONE	
*** FGD SYSTEM		
** GENERAL DATA		
SALEABLE PRODUCT/THROWAWAY PRODUCT	THROWAWAY PRODUCT	
SO2 REMOVAL MODE	WET SCRUBBING	
PROCESS TYPE	THOROUGHBRED 101	
SYSTEM SUPPLIER	CHIYODA INTERNATIONAL	
DEVELOPMENT LEVEL	PROTOTYPE	
NEW/RETROFIT	RETROFIT	

GULF POWER: SCHOLZ 1B,2B (CONT.)

UNIT DESIGN PARTICLE REMOVAL EFFICIENCY - %	99.70
UNIT DESIGN SO2 REMOVAL EFFICIENCY - %	90.00
CURRENT STATUS	8
TERMINATION	3/77
COMMERCIAL START-UP	2/75
INITIAL START-UP	2/75

** DESIGN AND OPERATING PARAMETERS

** QUENCHER/PRESATURATOR

CONSTRUCTION MATERIAL GENERIC TYPE	NR
CONSTRUCTION MATERIAL SPECIFIC TYPE	NR

** ABSORBER

NUMBER	1
GENERIC TYPE	PACKED TOWER
SPECIFIC TYPE	NR
TRADE NAME/COMMON TYPE	NR
SUPPLIER	CHIYODA INTERNATIONAL
SHELL GENERIC MATERIAL	STAINLESS STEEL
SHELL SPECIFIC MATERIAL	AUSTENITIC
SHELL MATERIAL TRADE NAME/COMMON TYPE	TYPE 316L
LINER GENERIC MATERIAL	NONE
LINER SPECIFIC MATERIAL	N/A
LINER MATERIAL TRADE NAME/COMMON TYPE	N/A

** MIST ELIMINATOR

PRE-MIST ELIMINATOR/MIST ELIMINATOR	PRIMARY COLLECTOR
NUMBER PER SYSTEM	2
GENERIC TYPE	IMPINGEMENT
SPECIFIC TYPE	BAFFLE
TRADE NAME/COMMON TYPE	CLOSED VANE
CONSTRUCTION MATERIAL GENERIC TYPE	NR
CONSTRUCTION MATERIAL SPECIFIC TYPE	NR

** REHEATER

GENERIC TYPE	NR
SPECIFIC TYPE	NR
TRADE NAME/COMMON TYPE	NR
PERCENT GAS BYPASSED - AVG	5.0
CONSTRUCTION MATERIAL GENERIC TYPE	NR
CONSTRUCTION MATERIAL SPECIFIC TYPE	NR

** FANS

DESIGN	NR
FUNCTION	NR
APPLICATION	NR
SERVICE	NR
CONSTRUCTION MATERIAL GENERIC TYPE	NR

** DAMPERS

FUNCTION	NR
GENERIC TYPE	NR
SPECIFIC TYPE	NR
CONSTRUCTION MATERIAL GENERIC TYPE	NR
CONSTRUCTION MATERIAL SPECIFIC TYPE	NR
LINER GENERIC MATERIAL TYPE	NR
LINER SPECIFIC MATERIAL TYPE	NR

** DUCTWORK

SHELL GENERIC MATERIAL TYPE	NR
SHELL SPECIFIC MATERIAL TYPE	NR
LINER GENERIC MATERIAL TYPE	NR
LINER SPECIFIC MATERIAL TYPE	NR

** REAGENT PREPARATION EQUIPMENT

FUNCTION	MIX TANK
DEVICE	N/A
DEVICE TYPE	AGITATED TANK

GULF POWER: SCHOLZ 1B,2B (CONT.)

** SOLIDS CONCENTRATING/DEWATERING	
DEVICE	CENTRIFUGE
NUMBER	1
CONFIGURATION	CONTINUOUS SCREW-DECANTER/SOLID BOWL
*** SLUDGE	
** TREATMENT	
METHOD	DEWATERED
DEVICE	N/A
PROPRIETARY PROCESS	N/A
** DISPOSAL	
NATURE	FINAL
TYPE	POND
SITE TREATMENT	CLAY LINING
** WATER BALANCE	
WATER LOOP TYPE	OPEN

APPENDIX F
DESIGN AND PERFORMANCE DATA FOR DISCONTINUED DOMESTIC FGD SYSTEMS

COMPANY NAME	GULF POWER	
PLANT NAME	SCHOLZ	
UNIT NUMBER	1,2	
CITY	SNEADS	
STATE	FLORIDA	
REGULATORY CLASSIFICATION	A	
PARTICULATE EMISSION LIMITATION - NG/J	******	(****** LB/MMBTU)
SO2 EMISSION LIMITATION - NG/J	******	(****** LB/MMBTU)
NOX EMISSION LIMITATION - NG/J	******	(****** LB/MMBTU)
NET PLANT GENERATING CAPACITY - MW	80	
GROSS UNIT GENERATING CAPACITY - MW	23	
NET UNIT GENERATING CAPACITY W/FGD - MW	23	
NET UNIT GENERATING CAPACITY WO/FGD - MW	*****	
EQUIVALENT SCRUBBED CAPACITY - MW	23	
** UNIT DATA - BOILER AND STACK		
BOILER SUPPLIER	BABCOCK & WILCOX	
BOILER TYPE	PULVERIZED COAL	
BOILER SERVICE LOAD	BASE	
DESIGN BOILER FLUE GAS FLOW - CU.M/S	********	(******* ACFM)
BOILER FLUE GAS TEMPERATURE - C	*******	(**** F)
STACK HEIGHT - M	23.	(76 FT)
STACK SHELL	FIBER-REINFORCED POLYESTER	
STACK TOP DIAMETER - M	*******	(***** FT)
** FUEL DATA		
FUEL TYPE	COAL	
FUEL GRADE	BITUMINOUS	
AVERAGE HEAT CONTENT - J/G	29075.	(12500 BTU/LB)
RANGE HEAT CONTENT - BTU/LB		******
AVERAGE ASH CONTENT - %	11.00	
RANGE ASH CONTENT - %	******	
AVERAGE MOISTURE CONTENT - %	5.00	
RANGE MOISTURE CONTENT - %	******	
AVERAGE SULFUR CONTENT - %	2.50	
RANGE SULFUR CONTENT - %	2.5-5.0	
AVERAGE CHLORIDE CONTENT - %	********	
RANGE CHLORIDE CONTENT - %	******	
*** PARTICLE CONTROL		
** ESP		
NUMBER	2	
TYPE	COLD SIDE	
SUPPLIER	BUELL DIVISION, ENVIROTECH	
INLET FLUE GAS TEMPERATURE - C	151.7	(305 F)
PARTICLE REMOVAL EFFICENCY - %	99.5	
** PARTICLE SCRUBBER		
NUMBER	0	
GENERIC TYPE	NONE	
SPECIFIC TYPE	N/A	
TRADE NAME/COMMON NAME	N/A	
SHELL GENERIC MATERIAL	N/A	
SHELL SPECIFIC MATERIAL	N/A	
LINER GENERIC MATERIAL	N/A	
LINER SPECIFIC MATERIAL	N/A	
GAS CONTACTING DEVICE TYPE	N/A	
*** FGD SYSTEM		
** GENERAL DATA		
SALEABLE PRODUCT/THROWAWAY PRODUCT	THROWAWAY PRODUCT	
SO2 REMOVAL MODE	WET SCRUBBING	
PROCESS TYPE	LIMESTONE/THOROUGHBRED 121	
PROCESS ADDITIVES	NONE	
SYSTEM SUPPLIER	CHIYODA INTERNATIONAL	
A-E FIRM	CHIYODA CHEMICAL ENG'R & CONSTION	
DEVELOPMENT LEVEL	PROTOTYPE	

GULF POWER: SCHOLZ 1,2 (CONT.)

NEW/RETROFIT	RETROFIT
UNIT DESIGN PARTICLE REMOVAL EFFICIENCY - %	99.50
UNIT DESIGN SO2 REMOVAL EFFICIENCY - %	90.00
CURRENT STATUS	8
TERMINATION	6/79
INITIAL START-UP	8/78

** DESIGN AND OPERATING PARAMETERS

** QUENCHER/PRESATURATOR

CONSTRUCTION MATERIAL GENERIC TYPE	NR
CONSTRUCTION MATERIAL SPECIFIC TYPE	NR

** ABSORBER

NUMBER	1
GENERIC TYPE	MECHANICALLY-AIDED TOWER
SPECIFIC TYPE	GAS SPARGER
TRADE NAME/COMMON TYPE	JET BUBBLER REACTOR
SUPPLIER	CHIYODA INTERNATIONAL
DIMENSIONS - FT	24.0 DIA
SHELL GENERIC MATERIAL	STAINLESS STEEL
SHELL SPECIFIC MATERIAL	AUSTENITIC
SHELL MATERIAL TRADE NAME/COMMON TYPE	NR
LINER GENERIC MATERIAL	ORGANIC
LINER SPECIFIC MATERIAL	FIBER-REINFORCED POLYESTER
LINER MATERIAL TRADE NAME/COMMON TYPE	NR
GAS CONTACTING DEVICE TYPE	N/A
NUMBER OF CONTACTING ZONES	1
INLET GAS FLOW - CU. M/S	37.75 (80000 ACFM)
INLET GAS TEMPERATURE - C	148.9 (300 F)
SO2 REMOVAL EFFICIENCY - %	95.0

** MIST ELIMINATOR

PRE-MIST ELIMINATOR/MIST ELIMINATOR	PRIMARY COLLECTOR
NUMBER PER SYSTEM	1
GENERIC TYPE	IMPINGEMENT
SPECIFIC TYPE	BAFFLE
TRADE NAME/COMMON TYPE	CLOSED VANE
CONFIGURATION	VERTICAL
NUMBER OF STAGES	2
NUMBER OF PASSES PER STAGE	2
PRESSURE DROP - KPA	.2 (1.0 IN-H2O)
CONSTRUCTION MATERIAL GENERIC TYPE	NR
CONSTRUCTION MATERIAL SPECIFIC TYPE	NR

** REHEATER

GENERIC TYPE	NONE
SPECIFIC TYPE	N/A
TRADE NAME/COMMON TYPE	N/A
CONSTRUCTION MATERIAL GENERIC TYPE	NONE
CONSTRUCTION MATERIAL SPECIFIC TYPE	N/A

** FANS

NUMBER	1
DESIGN	CENTRIFUGAL
FUNCTION	BOOSTER
APPLICATION	FORCED DRAFT
SERVICE	DRY
FLUE GAS FLOW RATE - CU.M/S	25.01 (53000 ACFM)
FLUE GAS TEMPERATURE - C	148.9 (300 F)
CONSTRUCTION MATERIAL GENERIC TYPE	CARBON STEEL

** DAMPERS

FUNCTION	NR
GENERIC TYPE	NR
SPECIFIC TYPE	NR
CONSTRUCTION MATERIAL GENERIC TYPE	NR
CONSTRUCTION MATERIAL SPECIFIC TYPE	NR
LINER GENERIC MATERIAL TYPE	NR
LINER SPECIFIC MATERIAL TYPE	NR

GULF POWER: SCHOLZ 1,2 (CONT.)

** DUCTWORK	
SHELL GENERIC MATERIAL TYPE	NR
SHELL SPECIFIC MATERIAL TYPE	NR
LINER GENERIC MATERIAL TYPE	NR
LINER SPECIFIC MATERIAL TYPE	NR
** REAGENT PREPARATION EQUIPMENT	
FUNCTION	WET BALL MILL
DEVICE	COMPARTMENTED
DEVICE TYPE	NR
** PUMPS	
SERVICE	NUMBER
-------	------
NR	****
** SOLIDS CONCENTRATING/DEWATERING	
DEVICE	NONE
*** SALEABLE BYPRODUCTS	
NATURE	GYPSUM
DISPOSITION	STACKED IN POND
*** SLUDGE	
** TREATMENT	
METHOD	FORCED OXIDATION
DEVICE	JET BUBBLER
PROPRIETARY PROCESS	N/A
** DISPOSAL	
NATURE	FINAL
TYPE	POND
SITE TREATMENT	CLAY LINING
** PROCESS CONTROL AND INSTRUMENTATION	
PROCESS CONTROL MANNER	MANUAL
** WATER BALANCE	
WATER LOOP TYPE	CLOSED

APPENDIX F
DESIGN AND PERFORMANCE DATA FOR DISCONTINUED DOMESTIC FGD SYSTEMS

COMPANY NAME	GULF POWER	
PLANT NAME	SCHOLZ	
UNIT NUMBER	2A	
CITY	SNEADS	
STATE	FLORIDA	
REGULATORY CLASSIFICATION	A	
PARTICULATE EMISSION LIMITATION - NG/J	******	(****** LB/MMBTU)
SO2 EMISSION LIMITATION - NG/J	******	(****** LB/MMBTU)
NOX EMISSION LIMITATION - NG/J	******	(****** LB/MMBTU)
NET PLANT GENERATING CAPACITY - MW	80	
GROSS UNIT GENERATING CAPACITY - MW	48	
NET UNIT GENERATING CAPACITY W/FGD - MW	40	
NET UNIT GENERATING CAPACITY WO/FGD - MW	*****	
EQUIVALENT SCRUBBED CAPACITY - MW	48	
** UNIT DATA - BOILER AND STACK		
BOILER SUPPLIER	BABCOCK & WILCOX	
BOILER TYPE	PULVERIZED COAL	
BOILER SERVICE LOAD	BASE	
DESIGN BOILER FLUE GAS FLOW - CU.M/S	********	(******* ACFM)
BOILER FLUE GAS TEMPERATURE - C	146.1	(295 F)
STACK HEIGHT - M	******	(**** FT)
STACK SHELL	NR	
STACK TOP DIAMETER - M	*******	(***** FT)
** FUEL DATA		
FUEL TYPE	COAL	
FUEL GRADE	BITUMINOUS	
AVERAGE HEAT CONTENT - J/G	******	(****** BTU/LB)
RANGE HEAT CONTENT - BTU/LB		******
AVERAGE ASH CONTENT - %	********	
RANGE ASH CONTENT - %	******	
AVERAGE MOISTURE CONTENT - %	********	
RANGE MOISTURE CONTENT - %	******	
AVERAGE SULFUR CONTENT - %	3.50	
RANGE SULFUR CONTENT - %	******	
AVERAGE CHLORIDE CONTENT - %	********	
RANGE CHLORIDE CONTENT - %	******	
*** PARTICLE CONTROL		
** MECHANICAL COLLECTOR		
NUMBER	0	
TYPE	NONE	
** ESP		
NUMBER	1	
** PARTICLE SCRUBBER		
NUMBER	0	
GENERIC TYPE	NONE	
SPECIFIC TYPE	N/A	
TRADE NAME/COMMON NAME	N/A	
SHELL GENERIC MATERIAL	N/A	
SHELL SPECIFIC MATERIAL	N/A	
LINER GENERIC MATERIAL	N/A	
LINER SPECIFIC MATERIAL	N/A	
GAS CONTACTING DEVICE TYPE	N/A	
*** FGD SYSTEM		
** GENERAL DATA		
SALEABLE PRODUCT/THROWAWAY PRODUCT	SALEABLE PRODUCT	
SO2 REMOVAL MODE	SPRAY DRYING	
PROCESS TYPE	ACTIVATED CARBON	
SYSTEM SUPPLIER	FOSTER WHEELER/BERGBAU	
DEVELOPMENT LEVEL	DEMONSTRATION	
NEW/RETROFIT	RETROFIT	
UNIT DESIGN PARTICLE REMOVAL EFFICIENCY - %	99.70	

GULF POWER: SCHOLZ 2A (CONT.)

UNIT DESIGN SO2 REMOVAL EFFICIENCY - %	74.50
CURRENT STATUS	8
TERMINATION	5/76
COMMERCIAL START-UP	2/76
INITIAL START-UP	8/75
CONTRACT AWARDED	1/73

** DESIGN AND OPERATING PARAMETERS

** QUENCHER/PRESATURATOR

CONSTRUCTION MATERIAL GENERIC TYPE	NR
CONSTRUCTION MATERIAL SPECIFIC TYPE	NR

** ABSORBER

NUMBER	1
GENERIC TYPE	PACKED TOWER
SPECIFIC TYPE	NR
TRADE NAME/COMMON TYPE	NR
SUPPLIER	FOSTER WHEELER/BERGBAU
SHELL GENERIC MATERIAL	NR
SHELL SPECIFIC MATERIAL	NR
SHELL MATERIAL TRADE NAME/COMMON TYPE	NR
LINER GENERIC MATERIAL	NR
LINER SPECIFIC MATERIAL	NR
LINER MATERIAL TRADE NAME/COMMON TYPE	NR

** MIST ELIMINATOR

PRE-MIST ELIMINATOR/MIST ELIMINATOR	NR
GENERIC TYPE	NR
SPECIFIC TYPE	NR
TRADE NAME/COMMON TYPE	NR
CONSTRUCTION MATERIAL GENERIC TYPE	NR
CONSTRUCTION MATERIAL SPECIFIC TYPE	NR

** REHEATER

NUMBER	0
GENERIC TYPE	NONE
SPECIFIC TYPE	N/A
TRADE NAME/COMMON TYPE	N/A
CONSTRUCTION MATERIAL GENERIC TYPE	NONE
CONSTRUCTION MATERIAL SPECIFIC TYPE	N/A

** FANS

DESIGN	NR
FUNCTION	NR
APPLICATION	NR
SERVICE	NR
CONSTRUCTION MATERIAL GENERIC TYPE	NR

** DAMPERS

FUNCTION	NR
GENERIC TYPE	NR
SPECIFIC TYPE	NR
CONSTRUCTION MATERIAL GENERIC TYPE	NR
CONSTRUCTION MATERIAL SPECIFIC TYPE	NR
LINER GENERIC MATERIAL TYPE	NR
LINER SPECIFIC MATERIAL TYPE	NR

** DUCTWORK

SHELL GENERIC MATERIAL TYPE	NR
SHELL SPECIFIC MATERIAL TYPE	NR
LINER GENERIC MATERIAL TYPE	NR
LINER SPECIFIC MATERIAL TYPE	NR

** REAGENT PREPARATION EQUIPMENT

FUNCTION	N/A
DEVICE	N/A
DEVICE TYPE	N/A

GULF POWER: SCHOLZ 2A (CONT.)

** PUMPS

SERVICE	NUMBER
NR	****

** SOLIDS CONCENTRATING/DEWATERING

DEVICE	NONE

*** SLUDGE

** TREATMENT

METHOD	N/A
DEVICE	N/A
PROPRIETARY PROCESS	N/A

** DISPOSAL

NATURE	FINAL
TYPE	POND
SITE TREATMENT	CLAY LINING

APPENDIX F
DESIGN AND PERFORMANCE DATA FOR DISCONTINUED DOMESTIC FGD SYSTEMS

COMPANY NAME	ILLINOIS POWER COMPANY	
PLANT NAME	WOOD RIVER	
UNIT NUMBER	4	
CITY	EAST ALTON	
STATE	ILLINOIS	
REGULATORY CLASSIFICATION	C	
PARTICULATE EMISSION LIMITATION - NG/J	******	(****** LB/MMBTU)
SO2 EMISSION LIMITATION - NG/J	774.	(1.800 LB/MMBTU)
NOX EMISSION LIMITATION - NG/J	******	(****** LB/MMBTU)
NET PLANT GENERATING CAPACITY - MW	651	
GROSS UNIT GENERATING CAPACITY - MW	110	
NET UNIT GENERATING CAPACITY W/FGD - MW	103	
NET UNIT GENERATING CAPACITY WO/FGD - MW	*****	
EQUIVALENT SCRUBBED CAPACITY - MW	110	
** UNIT DATA - BOILER AND STACK		
BOILER SUPPLIER	COMBUSTION ENGINEERING	
BOILER TYPE	PULVERIZED COAL	
BOILER SERVICE LOAD	BASE	
DESIGN BOILER FLUE GAS FLOW - CU.M/S	********	(******* ACFM)
BOILER FLUE GAS TEMPERATURE - C	154.4	(310 F)
STACK HEIGHT - M	76.	(250 FT)
STACK SHELL	NR	
STACK TOP DIAMETER - M	*******	(***** FT)
** FUEL DATA		
FUEL TYPE	COAL	
FUEL GRADE	******	
AVERAGE HEAT CONTENT - J/G	25121.	(10800 BTU/LB)
RANGE HEAT CONTENT - BTU/LB		******
AVERAGE ASH CONTENT - %	10.00	
RANGE ASH CONTENT - %	******	
AVERAGE MOISTURE CONTENT - %	4.30	
RANGE MOISTURE CONTENT - %	******	
AVERAGE SULFUR CONTENT - %	3.10	
RANGE SULFUR CONTENT - %	******	
AVERAGE CHLORIDE CONTENT - %	********	
RANGE CHLORIDE CONTENT - %	******	
*** PARTICLE CONTROL		
** MECHANICAL COLLECTOR		
NUMBER	1	
** FABRIC FILTER		
NUMBER	0	
TYPE	NONE	
** ESP		
NUMBER	1	
SUPPLIER	RESEARCH-COTTRELL	
PARTICLE REMOVAL EFFICENCY - %	99.6	
** PARTICLE SCRUBBER		
NUMBER	0	
GENERIC TYPE	NONE	
SPECIFIC TYPE	N/A	
TRADE NAME/COMMON NAME	N/A	
SHELL GENERIC MATERIAL	N/A	
SHELL SPECIFIC MATERIAL	N/A	
LINER GENERIC MATERIAL	N/A	
LINER SPECIFIC MATERIAL	N/A	
GAS CONTACTING DEVICE TYPE	N/A	
*** FGD SYSTEM		
** GENERAL DATA		
SALEABLE PRODUCT/THROWAWAY PRODUCT	SALEABLE PRODUCT	
SO2 REMOVAL MODE	WET SCRUBBING	

ILLINOIS POWER COMPANY: WOOD RIVER 4 (CONT.)

PROCESS TYPE	CATALYTIC OXIDATION	
SYSTEM SUPPLIER	MONSANTO ENVIRO CHEM SYSTEMS	
DEVELOPMENT LEVEL	DEMONSTRATION	
NEW/RETROFIT	RETROFIT	
UNIT DESIGN PARTICLE REMOVAL EFFICIENCY - %	99.90	
UNIT DESIGN SO2 REMOVAL EFFICIENCY - %	85.00	
CURRENT STATUS	8	
TERMINATION	0/74	
COMMERCIAL START-UP	10/72	
INITIAL START-UP	9/72	
CONTRACT AWARDED	6/70	

** DESIGN AND OPERATING PARAMETERS

** QUENCHER/PRESATURATOR

CONSTRUCTION MATERIAL GENERIC TYPE	NR	
CONSTRUCTION MATERIAL SPECIFIC TYPE	NR	

** ABSORBER

NUMBER	1	
GENERIC TYPE	PACKED TOWER	
SPECIFIC TYPE	NR	
TRADE NAME/COMMON TYPE	NR	
DIMENSIONS - FT	30.0 DIA X 65.0	
SHELL GENERIC MATERIAL	CARBON STEEL	
SHELL SPECIFIC MATERIAL	AISI 1110	
SHELL MATERIAL TRADE NAME/COMMON TYPE	N/A	
LINER GENERIC MATERIAL	NR	
LINER SPECIFIC MATERIAL	NR	
LINER MATERIAL TRADE NAME/COMMON TYPE	NR	
NUMBER OF CONTACTING ZONES	8	
DISTANCE BETWEEN GAS CONTACTING ZONES - CM	30.5	(12.0IN)
GAS-SIDE PRESSURE DROP - KPA	1.0	(4.0 IN-H2O)
INLET GAS TEMPERATURE - C	454.4	(850 F)
SO2 REMOVAL EFFICIENCY - %	85.0	

** ABSORBER

NUMBER	1	
GENERIC TYPE	PACKED TOWER	
SPECIFIC TYPE	NR	
TRADE NAME/COMMON TYPE	NR	
SHELL GENERIC MATERIAL	CARBON STEEL	
SHELL SPECIFIC MATERIAL	AISI 1110	
SHELL MATERIAL TRADE NAME/COMMON TYPE	N/A	
LINER GENERIC MATERIAL	INORGANIC	
LINER SPECIFIC MATERIAL	PREFIRED BRICK/SHAPES	
LINER MATERIAL TRADE NAME/COMMON TYPE	ACID-RESISTANT BRICK (LOW H2O ABSORPTION)	
INLET GAS TEMPERATURE - C	121.1	(250 F)

** MIST ELIMINATOR

PRE-MIST ELIMINATOR/MIST ELIMINATOR	PRIMARY COLLECTOR	
NUMBER PER SYSTEM	1	
GENERIC TYPE	IMPINGEMENT	
SPECIFIC TYPE	MESH	
TRADE NAME/COMMON TYPE	KNITTED WIRE MESH PAD	
PRESSURE DROP - KPA	4.5	(18.0 IN-H2O)
CONSTRUCTION MATERIAL GENERIC TYPE	HIGH ALLOY	
CONSTRUCTION MATERIAL SPECIFIC TYPE	NR	
WASH FREQUENCY	INTERMITTENT	

** REHEATER

NUMBER	1	
GENERIC TYPE	IN-LINE	
SPECIFIC TYPE	NR	
TRADE NAME/COMMON TYPE	NR	
PERCENT GAS BYPASSED - AVG	14.5	
TEMPERATURE INCREASE - C	247.8	(446 F)
INLET FLUE GAS TEMPERATURE - C	176.7	(350 F)
CONSTRUCTION MATERIAL-GENERIC TYPE	NR	
CONSTRUCTION MATERIAL SPECIFIC TYPE	NR	

ILLINOIS POWER COMPANY: WOOD RIVER 4 (CONT.)

** FANS	
NUMBER	1
DESIGN	CENTRIFUGAL
FUNCTION	NR
APPLICATION	INDUCED DRAFT
SERVICE	NR
CONSTRUCTION MATERIAL GENERIC TYPE	STAINLESS STEEL
** DAMPERS	
FUNCTION	NR
GENERIC TYPE	NR
SPECIFIC TYPE	NR
CONSTRUCTION MATERIAL GENERIC TYPE	NR
CONSTRUCTION MATERIAL SPECIFIC TYPE	NR
LINER GENERIC MATERIAL TYPE	NR
LINER SPECIFIC MATERIAL TYPE	NR
** DUCTWORK	
SHELL GENERIC MATERIAL TYPE	STAINLESS STEEL
SHELL SPECIFIC MATERIAL TYPE	NR
LINER GENERIC MATERIAL TYPE	NONE
LINER SPECIFIC MATERIAL TYPE	N/A
** REAGENT PREPARATION EQUIPMENT	
FUNCTION	N/A
DEVICE	N/A
DEVICE TYPE	N/A

** TANKS	
SERVICE	NUMBER
-------	------
SALEABLE BYPRODUCT	2

** PUMPS	
SERVICE	NUMBER
-------	------
ACID RECIRCULATION	****
PRODUCT ACID	****

** SOLIDS CONCENTRATING/DEWATERING	
DEVICE	NR
NUMBER	0
*** SLUDGE	
** TREATMENT	
METHOD	N/A
DEVICE	N/A
PROPRIETARY PROCESS	N/A
** DISPOSAL	
NATURE	N/A
TYPE	NONE
SITE TREATMENT	NR
** PROCESS CONTROL AND INSTRUMENTATION	
CHEMICAL PARAMETERS	TEMPERATURE, ASH LOADINGS, ACID CONCENTRATION

APPENDIX F
DESIGN AND PERFORMANCE DATA FOR DISCONTINUED DOMESTIC FGD SYSTEMS

COMPANY NAME	KANSAS CITY POWER & LIGHT	
PLANT NAME	HAWTHORN	
UNIT NUMBER	3	
CITY	KANSAS CITY	
STATE	MISSOURI	
REGULATORY CLASSIFICATION	E	
PARTICULATE EMISSION LIMITATION - NG/J	64.	(.150 LB/MMBTU)
SO2 EMISSION LIMITATION - NG/J	******	(****** LB/MMBTU)
NOX EMISSION LIMITATION - NG/J	******	(****** LB/MMBTU)
NET PLANT GENERATING CAPACITY - MW	836	
GROSS UNIT GENERATING CAPACITY - MW	90	
NET UNIT GENERATING CAPACITY W/FGD - MW	85	
NET UNIT GENERATING CAPACITY WO/FGD - MW	87	
EQUIVALENT SCRUBBED CAPACITY - MW	90	
** UNIT DATA - BOILER AND STACK		
BOILER SUPPLIER	COMBUSTION ENGINEERING	
BOILER TYPE	PULVERIZED COAL	
BOILER SERVICE LOAD	CYCLING	
DESIGN BOILER FLUE GAS FLOW - CU.M/S	235.95	(500000 ACFM)
BOILER FLUE GAS TEMPERATURE - C	148.9	(300 F)
STACK HEIGHT - M	61.	(200 FT)
STACK SHELL	CARBON STEEL	
STACK TOP DIAMETER - M	5.5	(18.0 FT)
** FUEL DATA		
FUEL TYPE	COAL 1 (25%)	
FUEL GRADE	BITUMINOUS; BITUMINOUS	
AVERAGE HEAT CONTENT - J/G	26388.	(11345 BTU/LB)
RANGE HEAT CONTENT - BTU/LB	9500-10800; 10500-13000	
AVERAGE ASH CONTENT - %	11.75	
RANGE ASH CONTENT - %	6-15; 9-12	
AVERAGE MOISTURE CONTENT - %	7.28	
RANGE MOISTURE CONTENT - %	9-17; 1.5-12	
AVERAGE SULFUR CONTENT - %	2.78	
RANGE SULFUR CONTENT - %	0.2-1.2; 0.6-4.6	
AVERAGE CHLORIDE CONTENT - %	.15	
RANGE CHLORIDE CONTENT - %	0.01-0.06; 0.01-0.40	
*** PARTICLE CONTROL		
** MECHANICAL COLLECTOR		
NUMBER	0	
TYPE	NONE	
** FABRIC FILTER		
NUMBER	0	
TYPE	NONE	
** PARTICLE SCRUBBER		
NUMBER	0	
GENERIC TYPE	NONE	
SPECIFIC TYPE	N/A	
TRADE NAME/COMMON NAME	N/A	
SHELL GENERIC MATERIAL	N/A	
SHELL SPECIFIC MATERIAL	N/A	
LINER GENERIC MATERIAL	N/A	
LINER SPECIFIC MATERIAL	N/A	
GAS CONTACTING DEVICE TYPE	N/A	
*** FGD SYSTEM		
** GENERAL DATA		
SALEABLE PRODUCT/THROWAWAY PRODUCT	THROWAWAY PRODUCT	
SO2 REMOVAL MODE	WET SCRUBBING	
PROCESS TYPE	LIME	
PROCESS ADDITIVES	NONE	
SYSTEM SUPPLIER	COMBUSTION ENGINEERING	
A-E FIRM	BLACK & VEATCH	

KANSAS CITY POWER & LIGHT: HAWTHORN 3 (CONT.)

DEVELOPMENT LEVEL	FULL SCALE	
NEW/RETROFIT	RETROFIT	
UNIT DESIGN PARTICLE REMOVAL EFFICIENCY - %	99.00	
UNIT DESIGN SO2 REMOVAL EFFICIENCY - %	70.00	
ENERGY CONSUMPTION - %	2.2	
CURRENT STATUS	8	
TERMINATION	10/82	
COMMERCIAL START-UP	11/72	
INITIAL START-UP	11/72	
CONTRACT AWARDED	0/71	
** DESIGN AND OPERATING PARAMETERS		
DESIGN COAL SULFER CONTENT - %	2.80	
DESIGN COAL HEAT CONTENT - J/G	26400.1	(11350 BTU/LB)
DESIGN COAL ASH CONTENT - %	11.80	
DESIGN MOISTURE CONTENT - %	7.30	
DESIGN CHLORIDE CONTENT - %	.15	
SPACE REQUIREMENTS - SQ M	688.4	(7410 SQ FT)
OPER. & MAINT. REQUIREMENT - MANHR/DAY	136.0	
** QUENCHER/PRESATURATOR		
NUMBER	0	
** ABSORBER		
NUMBER	2	
NUMBER OF SPARES	0	
GENERIC TYPE	PACKED TOWER	
SPECIFIC TYPE	STATIC BED PACKING	
TRADE NAME/COMMON TYPE	MARBLE-BED SCRUBBER	
SUPPLIER	COMBUSTION ENGINEERING	
DIMENSIONS - FT	18.0 X 26.0 X 56.0	
SHELL GENERIC MATERIAL	CARBON STEEL	
SHELL SPECIFIC MATERIAL	AISI 1110	
SHELL MATERIAL TRADE NAME/COMMON TYPE	N/A	
LINER GENERIC MATERIAL	STAINLESS STEEL	
LINER SPECIFIC MATERIAL	AUSTENITIC	
LINER MATERIAL TRADE NAME/COMMON TYPE	TYPE 316L	
GAS CONTACTING DEVICE TYPE	GLASS MARBLES	
NUMBER OF CONTACTING ZONES	1	
LIQUID RECIRCULATION RATE - LITER/S	321.	(5090 GPM)
L/G RATIO - L/CU.M	2.7	(20.4 GAL/1000 ACF)
GAS-SIDE PRESSURE DROP - KPA	2.7	(11.0 IN-H2O)
SUPERFICAL GAS VELOCITY - M/SEC	1.8	(6.0 FT/S)
INLET GAS FLOW - CU. M/S	117.97	(250000 ACFM)
INLET GAS TEMPERATURE - C	148.9	(300 F)
SO2 REMOVAL EFFICIENCY - %	50.0	
PARTICLE REMOVAL EFFICENCY - %	99.5	
** MIST ELIMINATOR		
PRE-MIST ELIMINATOR/MIST ELIMINATOR	PRIMARY COLLECTOR	
NUMBER PER SYSTEM	2	
NUMBER OF SPARES PER SYSTEM	0	
NUMBER PER MODULE	1	
GENERIC TYPE	IMPINGEMENT	
SPECIFIC TYPE	BAFFLE	
TRADE NAME/COMMON TYPE	CLOSED VANE	
MANUFACTURER	COMBUSTION ENGINEERING	
CONFIGURATION	HORIZONTAL	
NUMBER OF STAGES	2	
NUMBER OF PASSES PER STAGE	2	
FREEBOARD DISTANCE - M	3.05	(10.0 FT)
DISTANCE BETWEEN STAGES - CM	15.24	(6.0 IN)
DISTANCE BETWEEN VANES - CM	7.6	(3.00 IN)
VANE ANGLES - DEGREES	45	
PRESSURE DROP - KPA	.3	(1.2 IN-H2O)
SUPERFICAL GAS VELOCITY - M/S	1.8	(6.0 FT/S)
CONSTRUCTION MATERIAL GENERIC TYPE	ORGANIC	
CONSTRUCTION MATERIAL SPECIFIC TYPE	FIBER-REINFORCED POLYESTER	
WASH WATER SOURCE	FRESH	
WASH FREQUENCY	EVERY 48 HOURS	
WASH RATE - L/S	63.1	(1000 GAL/MIN)

KANSAS CITY POWER & LIGHT: HAWTHORN 3 (CONT.)

**** REHEATER**	
NUMBER	4
NUMBER OF SPARES	0
NUMBER PER MODULE	1
GENERIC TYPE	IN-LINE
SPECIFIC TYPE	HOT WATER
TRADE NAME/COMMON TYPE	BARE TUBE
LOCATION	TOP OF ABSORBER VESSEL
PERCENT GAS BYPASSED - AVG	.0
TEMPERATURE INCREASE - C	33.3 (60 F)
INLET FLUE GAS TEMPERATURE - C	48.9 (120 F)
OUTLET FLUE GAS TEMPERATURE - C	82.2 (180 F)
NUMBER OF HEAT EXCHANGER BANKS	6
NUMBER OF BUNDLES PER BANK	1
CONSTRUCTION MATERIAL GENERIC TYPE	STAINLESS STEEL
CONSTRUCTION MATERIAL SPECIFIC TYPE	AUSTENITIC
**** FANS**	
NUMBER	2
NUMBER OF SPARES	0
DESIGN	CENTRIFUGAL
SUPPLIER	HOUDEN, CANADA
FUNCTION	BOOSTER
APPLICATION	INDUCED DRAFT
SERVICE	DRY
FLUE GAS TEMPERATURE - C	79.4 (175 F)
CONSTRUCTION MATERIAL GENERIC TYPE	CARBON STEEL
**** DAMPERS**	
NUMBER	2
FUNCTION	SHUT-OFF
GENERIC TYPE	LOUVER
SPECIFIC TYPE	PARALLEL BLADE MULTILOUVER
MANUFACTURER	COMBUSTION ENGINEERING .
MODULATION	OPEN/CLOSED
SEAL AIR FLOW - CU. M/S	.00 (0 ACFM)
SERVICE CONDITIONS	330
CONSTRUCTION MATERIAL GENERIC TYPE	CARBON STEEL
CONSTRUCTION MATERIAL SPECIFIC TYPE	HIGH STRENGTH LOW ALLOY (HSLA)
LINER GENERIC MATERIAL TYPE	NONE
LINER SPECIFIC MATERIAL TYPE	N/A
**** DAMPERS**	
NUMBER	2
FUNCTION	SHUT-OFF
GENERIC TYPE	LOUVER
SPECIFIC TYPE	PARALLEL BLADE MULTILOUVER
MANUFACTURER	COMBUSTION ENGINEERING
MODULATION	OPEN/CLOSED
SEAL AIR FLOW - CU. M/S	.00 (0 ACFM)
SERVICE CONDITIONS	330
CONSTRUCTION MATERIAL GENERIC TYPE	CARBON STEEL
CONSTRUCTION MATERIAL SPECIFIC TYPE	HIGH STRENGTH LOW ALLOY (HSLA)
LINER GENERIC MATERIAL TYPE	NONE
LINER SPECIFIC MATERIAL TYPE	N/A
**** DAMPERS**	
NUMBER	2
FUNCTION	SHUT-OFF
GENERIC TYPE	GUILLOTINE
SPECIFIC TYPE	TOP-ENTRY GUILLOTINE
MANUFACTURER	SELF-DESIGNED & INSTALLED BY KCP & L
MODULATION	OPEN/CLOSED
SEAL AIR FLOW - CU. M/S	.00 (0 ACFM)
SERVICE CONDITIONS	330
CONSTRUCTION MATERIAL GENERIC TYPE	CARBON STEEL
CONSTRUCTION MATERIAL SPECIFIC TYPE	HIGH STRENGTH LOW ALLOY (HSLA)
LINER GENERIC MATERIAL TYPE	NONE
LINER SPECIFIC MATERIAL TYPE	N/A

KANSAS CITY POWER & LIGHT: HAWTHORN 3 (CONT.)

** DUCTWORK	
LOCATION	SCRUBBER INLET
CONFIGURATION	RECTANGULAR
DIMENSIONS	4.5 FT X 26 FT
SHELL GENERIC MATERIAL TYPE	CARBON STEEL
SHELL SPECIFIC MATERIAL TYPE	HIGH STRENGTH LOW ALLOY (HSLA)
LINER GENERIC MATERIAL TYPE	INORGANIC
LINER SPECIFIC MATERIAL TYPE	HYDRAULICALLY-BONDED MORTAR
** DUCTWORK	
LOCATION	SCRUBBER OUTLET
CONFIGURATION	RECTANGULAR
DIMENSIONS	3 FT X 26 FT
SHELL GENERIC MATERIAL TYPE	CARBON STEEL
SHELL SPECIFIC MATERIAL TYPE	HIGH STRENGTH LOW ALLOY (HSLA)
LINER GENERIC MATERIAL TYPE	INORGANIC
LINER SPECIFIC MATERIAL TYPE	HYDRAULICALLY-BONDED MORTAR
** DUCTWORK	
LOCATION	BYPASS
CONFIGURATION	RECTANGULAR
DIMENSIONS	3 FT X 26 FT
SHELL GENERIC MATERIAL TYPE	CARBON STEEL
SHELL SPECIFIC MATERIAL TYPE	HIGH STRENGTH LOW ALLOY (HSLA)
LINER GENERIC MATERIAL TYPE	NONE
LINER SPECIFIC MATERIAL TYPE	N/A
** REAGENT PREPARATION EQUIPMENT	
FUNCTION	SLAKER
DEVICE	NR
DEVICE TYPE	NR
MANUFACTURER	COFFMAN INDUSTRIES
NUMBER	1
NUMBER OF SPARES	0
FULL LOAD DRY FEED CAPACITY - M.TONS/HR	51.7 (57 TPH)
PRODUCT QUALITY - % SOLIDS	25.0

** TANKS	
SERVICE	NUMBER
-------	------
ABSORBER RECYCLE	2
LIME SLURRY	1
CLEARWELL	1

** PUMPS	
SERVICE	NUMBER
-------	------
RECYCLE	2
CLEAR WATER SUPPLY	2
SLUDGE	2
BLOWDOWN	2
REHEATER FEED	4
MIST ELIMINATOR WASH	4
LIME SLURRY	1
SCRUBBER MAKEUP	2

** SOLIDS CONCENTRATING/DEWATERING	
DEVICE	THICKENER
NUMBER	1
NUMBER OF SPARES	0
DIMENSIONS - FT	115.0 DIA X 10.0
CAPACITY	75000
SHELL GENERIC MATERIAL TYPE	CARBON STEEL (WALLS); INORGANIC (BOTTOM)
SHELL SPECIFIC MATERIAL TYPE	AISI 1110; HYDRAULICALLY-BONDED CONCRETE
LINER GENERIC MATERIAL TYPE	ORGANIC
LINER SPECIFIC MATERIAL TYPE	NR
FEED STREAM SOURCE	ABSORBER BLEED
FEED STREAM CHARACTERISTICS	12% SOLIDS
OUTLET STREAM CHARACTERISTICS	30% SOLIDS
OVERFLOW STREAM CHARACTERISTICS	13900 GPM

KANSAS CITY POWER & LIGHT: HAWTHORN 3 (CONT.)

OUTLET STREAM DISPOSITION	TO ASH POND
OVERFLOW STREAM DISPOSITION	TO RECYCLE CANAL, ASH SLUICE PUMP

*** SLUDGE

** TREATMENT

METHOD	BLEED
DEVICE	N/A
PROPRIETARY PROCESS	N/A

** DISPOSAL

NATURE	FINAL
TYPE	POND
LOCATION	ON-SITE
SITE TRANSPORTATION METHOD	PIPELINE
SITE TREATMENT	NONE
SITE DIMENSIONS	40 ACRES/15 FT
SITE CAPACITY - CU.M	733800 (600.0 ACRE-FT)
SITE SERVICE LIFE - YRS	3

** PROCESS CONTROL AND INSTRUMENTATION

PROCESS STREAM	RECIRCULATING SLURRY
CHEMICAL PARAMETERS	PH
PHYSICAL VARIABLES	% SOLIDS
CONTROL LEVELS	PH 5.5-6.0, 10% SOLIDS
MONITOR LOCATION	GRAB SAMPLES TO LABORATORY
PROCESS CONTROL MANNER	MANUAL
PROCESS CHEMISTRY MODE	FEEDBACK

** WATER BALANCE

WATER LOOP TYPE	OPEN
RECEIVING WATER STREAM	MISSOURI RIVER
SOURCE OF MAKEUP WATER	MISSOURI RIVER

** CHEMICALS AND CONSUMPTION

FUNCTION	ABSORBENT
NAME	LIME
PRINCIPAL CONSTITUENT	93% CAO
SOURCE/SUPPLIER	ASHGROVE
POINT OF ADDITION	LIME SLAKER

** FGD SPARE CAPACITY INDICES

ABSORBER - %	.0
MIST ELIMINATOR - %	.0
REHEATER - %	.0
FAN - %	.0
SLAKER - %	.0
EFFLUENT HOLD TANK - %	.0
RECIRCULATION PUMP - %	.0
THICKENER - %	.0

** FGD SPARE COMPONENT INDICES

ABSORBER	.0
MIST ELIMINATOR	.0
REHEATER	.0
FAN	.0
SLAKER	.0
EFFLUENT HOLD TANK	.0
RECIRCULATION PUMP	.0
THICKENER	.0

APPENDIX F
DESIGN AND PERFORMANCE DATA FOR DISCONTINUED DOMESTIC FGD SYSTEMS

COMPANY NAME	KANSAS CITY POWER & LIGHT	
PLANT NAME	HAWTHORN	
UNIT NUMBER	4	
CITY	KANSAS CITY	
STATE	MISSOURI	
REGULATORY CLASSIFICATION	E	
PARTICULATE EMISSION LIMITATION - NG/J	64.	(.150 LB/MMBTU)
SO2 EMISSION LIMITATION - NG/J	******	(****** LB/MMBTU)
NOX EMISSION LIMITATION - NG/J	******	(****** LB/MMBTU)
NET PLANT GENERATING CAPACITY - MW	836	
GROSS UNIT GENERATING CAPACITY - MW	90	
NET UNIT GENERATING CAPACITY W/FGD - MW	85	
NET UNIT GENERATING CAPACITY WO/FGD - MW	87	
EQUIVALENT SCRUBBED CAPACITY - MW	90	
** UNIT DATA - BOILER AND STACK		
BOILER SUPPLIER	COMBUSTION ENGINEERING	
BOILER TYPE	PULVERIZED COAL	
BOILER SERVICE LOAD	CYCLING	
DESIGN BOILER FLUE GAS FLOW - CU.M/S	235.95	(500000 ACFM)
BOILER FLUE GAS TEMPERATURE - C	148.9	(300 F)
STACK HEIGHT - M	61.	(200 FT)
STACK SHELL	CARBON STEEL	
STACK TOP DIAMETER - M	5.5	(18.0 FT)
** FUEL DATA		
FUEL TYPE	COAL 1 [25%]	
FUEL GRADE	BITUMINOUS; BITUMINOUS	
AVERAGE HEAT CONTENT - J/G	26388.	(11345 BTU/LB)
RANGE HEAT CONTENT - BTU/LB		9500-10800; 10500-13000
AVERAGE ASH CONTENT - %	11.75	
RANGE ASH CONTENT - %	6-15; 9-12	
AVERAGE MOISTURE CONTENT - %	7.28	
RANGE MOISTURE CONTENT - %	9-17; 1.5-12	
AVERAGE SULFUR CONTENT - %	2.78	
RANGE SULFUR CONTENT - %	0.2-1.2; 0.6-4.6	
AVERAGE CHLORIDE CONTENT - %	.15	
RANGE CHLORIDE CONTENT - %	0.01-0.06; 0.01-0.40	
*** PARTICLE CONTROL		
** MECHANICAL COLLECTOR		
NUMBER	0	
TYPE	NONE	
** FABRIC FILTER		
NUMBER	0	
TYPE	NONE	
** PARTICLE SCRUBBER		
NUMBER	0	
GENERIC TYPE	NONE	
SPECIFIC TYPE	N/A	
TRADE NAME/COMMON NAME	N/A	
SHELL GENERIC MATERIAL	N/A	
SHELL SPECIFIC MATERIAL	N/A	
LINER GENERIC MATERIAL	N/A	
LINER SPECIFIC MATERIAL	N/A	
GAS CONTACTING DEVICE TYPE	N/A	
*** FGD SYSTEM		
** GENERAL DATA		
SALEABLE PRODUCT/THROWAWAY PRODUCT	THROWAWAY PRODUCT	
SO2 REMOVAL MODE	WET SCRUBBING	
PROCESS TYPE	LIME	
PROCESS ADDITIVES	NONE	
SYSTEM SUPPLIER	COMBUSTION ENGINEERING	
A-E FIRM	BLACK & VEATCH	

KANSAS CITY POWER & LIGHT: HAWTHORN 4 (CONT.)

DEVELOPMENT LEVEL	FULL SCALE	
NEW/RETROFIT	RETROFIT	
UNIT DESIGN PARTICLE REMOVAL EFFICIENCY - %	99.00	
UNIT DESIGN SO2 REMOVAL EFFICIENCY - %	70.00	
ENERGY CONSUMPTION - %	2.2	
CURRENT STATUS	8	
TERMINATION	10/82	
COMMERCIAL START-UP	11/72	
INITIAL START-UP	8/72	
CONTRACT AWARDED	0/71	
** DESIGN AND OPERATING PARAMETERS		
DESIGN COAL SULFER CONTENT - %	2.80	
DESIGN COAL HEAT CONTENT - J/G	26400.1	(11350 BTU/LB)
DESIGN COAL ASH CONTENT - %	11.80	
DESIGN MOISTURE CONTENT - %	7.30	
DESIGN CHLORIDE CONTENT - %	.15	
SPACE REQUIREMENTS - SQ M	688.4	(7410 SQ FT)
OPER. & MAINT. REQUIREMENT - MANHR/DAY	136.0	
** QUENCHER/PRESATURATOR		
NUMBER	0	
** ABSORBER		
NUMBER	2	
NUMBER OF SPARES	0	
GENERIC TYPE	PACKED TOWER	
SPECIFIC TYPE	STATIC BED PACKING	
TRADE NAME/COMMON TYPE	MARBLE-BED SCRUBBER	
SUPPLIER	COMBUSTION ENGINEERING	
DIMENSIONS - FT	18.0 X 26.0 X 56.0	
SHELL GENERIC MATERIAL	CARBON STEEL	
SHELL SPECIFIC MATERIAL	AISI 1110	
SHELL MATERIAL TRADE NAME/COMMON TYPE	N/A	
LINER GENERIC MATERIAL	STAINLESS STEEL	
LINER SPECIFIC MATERIAL	AUSTENITIC	
LINER MATERIAL TRADE NAME/COMMON TYPE	TYPE 316L	
GAS CONTACTING DEVICE TYPE	GLASS MARBLES	
NUMBER OF CONTACTING ZONES	1	
LIQUID RECIRCULATION RATE - LITER/S	321.	(5090 GPM)
L/G RATIO - L/CU.M	2.7	(20.4 GAL/1000 ACF)
GAS-SIDE PRESSURE DROP - KPA	2.7	(11.0 IN-H2O)
SUPERFICAL GAS VELOCITY - M/SEC	1.8	(6.0 FT/S)
INLET GAS FLOW - CU. M/S	117.97	(250000 ACFM)
INLET GAS TEMPERATURE - C	148.9	(300 F)
SO2 REMOVAL EFFICIENCY - %	50.0	
PARTICLE REMOVAL EFFICENCY - %	99.5	
** MIST ELIMINATOR		
PRE-MIST ELIMINATOR/MIST ELIMINATOR	PRIMARY COLLECTOR	
NUMBER PER SYSTEM	2	
NUMBER OF SPARES PER SYSTEM	0	
NUMBER PER MODULE	1	
GENERIC TYPE	IMPINGEMENT	
SPECIFIC TYPE	BAFFLE	
TRADE NAME/COMMON TYPE	CLOSED VANE	
MANUFACTURER	COMBUSTION ENGINEERING	
CONFIGURATION	HORIZONTAL	
NUMBER OF STAGES	2	
NUMBER OF PASSES PER STAGE	2	
FREEBOARD DISTANCE - M	3.05	(10.0 FT)
DISTANCE BETWEEN STAGES - CM	15.24	(6.0 IN)
DISTANCE BETWEEN VANES - CM	7.6	(3.00 IN)
VANE ANGLES - DEGREES	45	
PRESSURE DROP - KPA	.3	(1.2 IN-H2O)
SUPERFICAL GAS VELOCITY - M/S	1.8	(6.0 FT/S)
CONSTRUCTION MATERIAL GENERIC TYPE	ORGANIC	
CONSTRUCTION MATERIAL SPECIFIC TYPE	FIBER-REINFORCED POLYESTER	
WASH WATER SOURCE	FRESH	
WASH FREQUENCY	EVERY 48 HOURS	
WASH RATE - L/S	63.1	(1000 GAL/MIN)

KANSAS CITY POWER & LIGHT: HAWTHORN 4 (CONT.)

** REHEATER			
NUMBER	4		
NUMBER OF SPARES	0		
NUMBER PER MODULE	1		
GENERIC TYPE	IN-LINE		
SPECIFIC TYPE	HOT WATER		
TRADE NAME/COMMON TYPE	BARE TUBE		
LOCATION	TOP OF ABSORBER VESSEL		
PERCENT GAS BYPASSED - AVG	.0		
TEMPERATURE INCREASE - C	33.3	(60 F)	
INLET FLUE GAS TEMPERATURE - C	48.9	(120 F)	
OUTLET FLUE GAS TEMPERATURE - C	82.2	(180 F)	
NUMBER OF HEAT EXCHANGER BANKS	6		
NUMBER OF BUNDLES PER BANK	1		
CONSTRUCTION MATERIAL GENERIC TYPE	STAINLESS STEEL		
CONSTRUCTION MATERIAL SPECIFIC TYPE	AUSTENITIC		
** FANS			
NUMBER	2		
NUMBER OF SPARES	0		
DESIGN	CENTRIFUGAL		
SUPPLIER	HOUDEN, CANADA		
FUNCTION	BOOSTER		
APPLICATION	INDUCED DRAFT		
SERVICE	DRY		
FLUE GAS TEMPERATURE - C	79.4	(175 F)	
CONSTRUCTION MATERIAL GENERIC TYPE	CARBON STEEL		
** DAMPERS			
NUMBER	2		
FUNCTION	SHUT-OFF		
GENERIC TYPE	LOUVER		
SPECIFIC TYPE	PARALLEL BLADE MULTILOUVER		
MANUFACTURER	COMBUSTION ENGINEERING		
MODULATION	OPEN/CLOSED		
SEAL AIR FLOW - CU. M/S	.00	(0 ACFM)	
SERVICE CONDITIONS	330		
CONSTRUCTION MATERIAL GENERIC TYPE	CARBON STEEL		
CONSTRUCTION MATERIAL SPECIFIC TYPE	HIGH STRENGTH LOW ALLOY (HSLA)		
LINER GENERIC MATERIAL TYPE	NONE		
LINER SPECIFIC MATERIAL TYPE	N/A		
** DAMPERS			
NUMBER	2		
FUNCTION	SHUT-OFF		
GENERIC TYPE	LOUVER		
SPECIFIC TYPE	PARALLEL BLADE MULTILOUVER		
MANUFACTURER	COMBUSTION ENGINEERING		
MODULATION	OPEN/CLOSED		
SEAL AIR FLOW - CU. M/S	.00	(0 ACFM)	
SERVICE CONDITIONS	330		
CONSTRUCTION MATERIAL GENERIC TYPE	CARBON STEEL		
CONSTRUCTION MATERIAL SPECIFIC TYPE	HIGH STRENGTH LOW ALLOY (HSLA)		
LINER GENERIC MATERIAL TYPE	NONE		
LINER SPECIFIC MATERIAL TYPE	N/A		
** DAMPERS			
NUMBER	2		
FUNCTION	SHUT-OFF		
GENERIC TYPE	GUILLOTINE		
SPECIFIC TYPE	TOP-ENTRY GUILLOTINE		
MANUFACTURER	SELF-DESIGNED & INSTALLED BY KCP & L		
MODULATION	OPEN/CLOSED		
SEAL AIR FLOW - CU. M/S	.00	(0 ACFM)	
SERVICE CONDITIONS	330		
CONSTRUCTION MATERIAL GENERIC TYPE	CARBON STEEL		
CONSTRUCTION MATERIAL SPECIFIC TYPE	HIGH STRENGTH LOW ALLOY (HSLA)		
LINER GENERIC MATERIAL TYPE	NONE		
LINER SPECIFIC MATERIAL TYPE	N/A		

KANSAS CITY POWER & LIGHT: HAWTHORN 4 (CONT.)

** DUCTWORK	
LOCATION	SCRUBBER INLET
CONFIGURATION	RECTANGULAR
DIMENSIONS	4.5 FT X 26 FT
SHELL GENERIC MATERIAL TYPE	CARBON STEEL
SHELL SPECIFIC MATERIAL TYPE	HIGH STRENGTH LOW ALLOY (HSLA)
LINER GENERIC MATERIAL TYPE	INORGANIC
LINER SPECIFIC MATERIAL TYPE	HYDRAULICALLY-BONDED MORTAR
** DUCTWORK	
LOCATION	SCRUBBER OUTLET
CONFIGURATION	RECTANGULAR
DIMENSIONS	3 FT X 26 FT
SHELL GENERIC MATERIAL TYPE	CARBON STEEL
SHELL SPECIFIC MATERIAL TYPE	HIGH STRENGTH LOW ALLOY (HSLA)
LINER GENERIC MATERIAL TYPE	INORGANIC
LINER SPECIFIC MATERIAL TYPE	HYDRAULICALLY-BONDED MORTAR
** DUCTWORK	
LOCATION	BYPASS
CONFIGURATION	RECTANGULAR
DIMENSIONS	3 FT X 26 FT
SHELL GENERIC MATERIAL TYPE	CARBON STEEL
SHELL SPECIFIC MATERIAL TYPE	HIGH STRENGTH LOW ALLOY (HSLA)
LINER GENERIC MATERIAL TYPE	NONE
LINER SPECIFIC MATERIAL TYPE	N/A
** REAGENT PREPARATION EQUIPMENT	
FUNCTION	SLAKER
DEVICE	NR
DEVICE TYPE	NR
MANUFACTURER	COFFMAN INDUSTRIES
NUMBER	1
NUMBER OF SPARES	0
FULL LOAD DRY FEED CAPACITY - M.TONS/HR	51.7 (57 TPH)
PRODUCT QUALITY - % SOLIDS	25.0

** TANKS	
SERVICE	NUMBER
-------	------
ABSORBER RECYCLE	2
LIME SLURRY	1
CLEARWELL	1

** PUMPS	
SERVICE	NUMBER
-------	------
RECYCLE	2
CLEAR WATER SUPPLY	2
SLUDGE	2
BLOWDOWN	2
REHEATER FEED	4
MIST ELIMINATOR WASH	4
LIME SLURRY	1
SCRUBBER MAKEUP	2

** SOLIDS CONCENTRATING/DEWATERING	
DEVICE	THICKENER
NUMBER	1
NUMBER OF SPARES	0
DIMENSIONS - FT	115.0 DIA X 10.0
CAPACITY	75000
SHELL GENERIC MATERIAL TYPE	CARBON STEEL (WALLS); INORGANIC (BOTTOM)
SHELL SPECIFIC MATERIAL TYPE	AISI 1110; HYDRAULICALLY-BONDED CONCRETE
LINER GENERIC MATERIAL TYPE	ORGANIC
LINER SPECIFIC MATERIAL TYPE	NR
FEED STREAM SOURCE	ABSORBER BLEED
FEED STREAM CHARACTERISTICS	12% SOLIDS
OUTLET STREAM CHARACTERISTICS	30% SOLIDS
OVERFLOW STREAM CHARACTERISTICS	13900 GPM

KANSAS CITY POWER & LIGHT: HAWTHORN 4 (CONT.)

OUTLET STREAM DISPOSITION	TO ASH POND
OVERFLOW STREAM DISPOSITION	TO RECYCLE CANAL, ASH SLUICE PUMP

*** SLUDGE

** TREATMENT

METHOD	BLEED
DEVICE	N/A
PROPRIETARY PROCESS	N/A

** DISPOSAL

NATURE	FINAL
TYPE	POND
LOCATION	ON-SITE
SITE TRANSPORTATION METHOD	PIPELINE
SITE TREATMENT	NONE
SITE DIMENSIONS	40 ACRES/15 FT
SITE CAPACITY - CU.M	733800 (600.0 ACRE-FT)
SITE SERVICE LIFE - YRS	3

** PROCESS CONTROL AND INSTRUMENTATION

PROCESS STREAM	RECIRCULATING SLURRY
CHEMICAL PARAMETERS	PH
PHYSICAL VARIABLES	% SOLIDS
CONTROL LEVELS	PH 5.5-6.0, 10% SOLIDS
MONITOR LOCATION	GRAB SAMPLES TO LABORATORY
PROCESS CONTROL MANNER	MANUAL
PROCESS CHEMISTRY MODE	FEEDBACK

** WATER BALANCE

WATER LOOP TYPE	OPEN
RECEIVING WATER STREAM	MISSOURI RIVER
SOURCE OF MAKEUP WATER	MISSOURI RIVER

** CHEMICALS AND CONSUMPTION

FUNCTION	ABSORBENT
NAME	LIME
PRINCIPAL CONSTITUENT	93% CAO
SOURCE/SUPPLIER	ASHGROVE
POINT OF ADDITION	LIME SLAKER

** FGD SPARE CAPACITY INDICES

ABSORBER - %	.0
MIST ELIMINATOR - %	.0
REHEATER - %	.0
FAN - %	.0
SLAKER - %	.0
EFFLUENT HOLD TANK - %	.0
RECIRCULATION PUMP - %	.0
THICKENER - %	.0

** FGD SPARE COMPONENT INDICES

ABSORBER	.0
MIST ELIMINATOR	.0
REHEATER	.0
FAN	.0
SLAKER	.0
EFFLUENT HOLD TANK	.0
RECIRCULATION PUMP	.0
THICKENER	.0

APPENDIX F
DESIGN AND PERFORMANCE DATA FOR DISCONTINUED DOMESTIC FGD SYSTEMS

COMPANY NAME	KEY WEST UTILITY BOARD	
PLANT NAME	STOCK ISLAND	
UNIT NUMBER	1	
CITY	KEY WEST	
STATE	FLORIDA	
REGULATORY CLASSIFICATION	E	
PARTICULATE EMISSION LIMITATION - NG/J	******	(****** LB/MMBTU)
SO2 EMISSION LIMITATION - NG/J	473.	(1.100 LB/MMBTU)
NOX EMISSION LIMITATION - NG/J	******	(****** LB/MMBTU)
NET PLANT GENERATING CAPACITY - MW	42	
GROSS UNIT GENERATING CAPACITY - MW	42	
NET UNIT GENERATING CAPACITY W/FGD - MW	37	
NET UNIT GENERATING CAPACITY WO/FGD - MW	*****	
EQUIVALENT SCRUBBED CAPACITY - MW	37	
** UNIT DATA - BOILER AND STACK		
BOILER SUPPLIER	ERIE CITY	
BOILER TYPE	OIL FIRED	
BOILER SERVICE LOAD	BASE	
DESIGN BOILER FLUE GAS FLOW - CU.M/S	********	(******* ACFM)
BOILER FLUE GAS TEMPERATURE - C	*******	(**** F)
STACK HEIGHT - M	34.	(110 FT)
STACK SHELL	NR	
STACK TOP DIAMETER - M	*******	(***** FT)
** FUEL DATA		
FUEL TYPE	OIL	
FUEL GRADE	NO. 6	
AVERAGE HEAT CONTENT - J/G	******	(****** BTU/LB)
RANGE HEAT CONTENT - BTU/LB		******
AVERAGE ASH CONTENT - %	.04	
RANGE ASH CONTENT - %	******	
AVERAGE MOISTURE CONTENT - %	********	
RANGE MOISTURE CONTENT - %	******	
AVERAGE SULFUR CONTENT - %	2.01	
RANGE SULFUR CONTENT - %	2.0-3.0	
AVEPAGE CHLORIDE CONTENT - %	********	
RANGE CHLORIDE CONTENT - %	******	
*** PARTICLE CONTROL		
** MECHANICAL COLLECTOR		
NUMBER	1	
PRESSURE DROP - KPA	.6	(3. IN-H2O)
** FABRIC FILTER		
NUMBER	0	
TYPE	NONE	
** ESP		
NUMBER	0	
TYPE	NONE	
** PARTICLE SCRUBBER		
NUMBER	0	
GENERIC TYPE	NONE	
SPECIFIC TYPE	N/A	
TRADE NAME/COMMON NAME	N/A	
SHELL GENERIC MATERIAL	N/A	
SHELL SPECIFIC MATERIAL	N/A	
LINER GENERIC MATERIAL	N/A	
LINER SPECIFIC MATERIAL	N/A	
GAS CONTACTING DEVICE TYPE	N/A	
*** FGD SYSTEM		
** GENERAL DATA		
SALEABLE PRODUCT/THROWAWAY PRODUCT	THROWAWAY PRODUCT	
SO2 REMOVAL MODE	WET SCRUBBING	

KEY WEST UTILITY BOARD: STOCK ISLAND 1 (CONT.)

PROCESS TYPE	LIMESTONE
SYSTEM SUPPLIER	ZURN AIR SYSTEM
DEVELOPMENT LEVEL	DEMONSTRATION
NEW/RETROFIT	NEW
UNIT DESIGN PARTICLE REMOVAL EFFICIENCY - %	90.00
UNIT DESIGN SO2 REMOVAL EFFICIENCY - %	85.00
CURRENT STATUS	8
TERMINATION	1/75
INITIAL START-UP	10/72
CONTRACT AWARDED	0/70

** DESIGN AND OPERATING PARAMETERS

** QUENCHER/PRESATURATOR

CONSTRUCTION MATERIAL GENERIC TYPE	NR
CONSTRUCTION MATERIAL SPECIFIC TYPE	NR

** ABSORBER

NUMBER	2	
GENERIC TYPE	VENTURI TOWER	
SPECIFIC TYPE	NR	
TRADE NAME/COMMON TYPE	NR	
SUPPLIER	ZURN AIR SYSTEMS	
SHELL GENERIC MATERIAL	STAINLESS STEEL	
SHELL SPECIFIC MATERIAL	AUSTENITIC	
SHELL MATERIAL TRADE NAME/COMMON TYPE	TYPE 304L	
LINER GENERIC MATERIAL	NONE	
LINER SPECIFIC MATERIAL	N/A	
LINER MATERIAL TRADE NAME/COMMON TYPE	N/A	
GAS CONTACTING DEVICE TYPE	SCRUBBING TUBE	
LIQUID RECIRCULATION RATE - LITER/S	25.	(400 GPM)
GAS-SIDE PRESSURE DROP - KPA	1.5	(6.0 IN-H2O)
INLET GAS FLOW - CU. M/S	58.04	(123000 ACFM)
INLET GAS TEMPERATURE - C	62.8	(145 F)

** MIST ELIMINATOR

PRE-MIST ELIMINATOR/MIST ELIMINATOR	PRIMARY COLLECTOR
GENERIC TYPE	IMPINGEMENT
SPECIFIC TYPE	CURVED DEFLECTOR PLATE
TRADE NAME/COMMON TYPE	GULL WING
CONSTRUCTION MATERIAL GENERIC TYPE	ORGANIC
CONSTRUCTION MATERIAL SPECIFIC TYPE	FIBER-REINFORCED POLYESTER

** REHEATER

NUMBER	0
GENERIC TYPE	NONE
SPECIFIC TYPE	N/A
TRADE NAME/COMMON TYPE	N/A
CONSTRUCTION MATERIAL GENERIC TYPE	NONE
CONSTRUCTION MATERIAL SPECIFIC TYPE	N/A

** FANS

NUMBER	1
DESIGN	NR
FUNCTION	NR
APPLICATION	INDUCED DRAFT
SERVICE	NR
CONSTRUCTION MATERIAL GENERIC TYPE	NR

** DAMPERS

FUNCTION	NR
GENERIC TYPE	NR
SPECIFIC TYPE	NR
CONSTRUCTION MATERIAL GENERIC TYPE	NR
CONSTRUCTION MATERIAL SPECIFIC TYPE	NR
LINER GENERIC MATERIAL TYPE	NR
LINER SPECIFIC MATERIAL TYPE	NR

** DUCTWORK

SHELL GENERIC MATERIAL TYPE	NR
SHELL SPECIFIC MATERIAL TYPE	NR

KEY WEST UTILITY BOARD: STOCK ISLAND 1 (CONT.)

LINER GENERIC MATERIAL TYPE	NR
LINER SPECIFIC MATERIAL TYPE	NR
** REAGENT PREPARATION EQUIPMENT	
FUNCTION	WET BALL MILL
DEVICE	NR
DEVICE TYPE	NR
** PUMPS	
SERVICE	NUMBER
-------	------
NR	****
** SOLIDS CONCENTRATING/DEWATERING	
DEVICE	NA
*** SLUDGE	
** TREATMENT	
METHOD	BLEED
DEVICE	N/A
PROPRIETARY PROCESS	N/A
** DISPOSAL	
NATURE	FINAL
TYPE	POND
SITE TREATMENT	NONE
** PROCESS CONTROL AND INSTRUMENTATION	
CHEMICAL PARAMETERS	TEMPERATURE, PARTICLE LOADING, PH
** WATER BALANCE	
WATER LOOP TYPE	OPEN

APPENDIX F
DESIGN AND PERFORMANCE DATA FOR DISCONTINUED DOMESTIC FGD SYSTEMS

COMPANY NAME	NORTHERN INDIANA PUB SERVICE	
PLANT NAME	DEAN H. MITCHELL	
UNIT NUMBER	11	
CITY	GARY	
STATE	INDIANA	
REGULATORY CLASSIFICATION	E	
PARTICULATE EMISSION LIMITATION - NG/J	43.	(.100 LB/MMBTU)
SO2 EMISSION LIMITATION - NG/J	516.	(1.200 LB/MMBTU)
NOX EMISSION LIMITATION - NG/J	******	(****** LB/MMBTU)
NET PLANT GENERATING CAPACITY - MW	505	
GROSS UNIT GENERATING CAPACITY - MW	116	
NET UNIT GENERATING CAPACITY W/FGD - MW	94	
NET UNIT GENERATING CAPACITY WO/FGD - MW	108	
EQUIVALENT SCRUBBED CAPACITY - MW	115	
** UNIT DATA - BOILER AND STACK		
BOILER SUPPLIER	BABCOCK & WILCOX	
BOILER TYPE	PULVERIZED COAL	
BOILER SERVICE LOAD	BASE	
DESIGN BOILER FLUE GAS FLOW - CU.M/S	198.20	(420000 ACFM)
BOILER FLUE GAS TEMPERATURE - C	142.2	(288 F)
STACK HEIGHT - M	51.	(168 FT)
STACK SHELL	FRP	
STACK TOP DIAMETER - M	*******	(***** FT)
** FUEL DATA		
FUEL TYPE	COAL	
FUEL GRADE	******	
AVERAGE HEAT CONTENT - J/G	25586.	(11000 BTU/LB)
RANGE HEAT CONTENT - BTU/LB		******
AVERAGE ASH CONTENT - %	********	
RANGE ASH CONTENT - %	******	
AVERAGE MOISTURE CONTENT - %	11.00	
RANGE MOISTURE CONTENT - %	******	
AVERAGE SULFUR CONTENT - %	3.50	
RANGE SULFUR CONTENT - %	3.2-3.5	
AVERAGE CHLORIDE CONTENT - %	********	
RANGE CHLORIDE CONTENT - %	******	
*** PARTICLE CONTROL		
** ESP		
NUMBER	1	
TYPE	COLD SIDE	
SUPPLIER	AMERICAN STANDARD	
** PARTICLE SCRUBBER		
NUMBER	1	
INITIAL START-UP DATE	7/76	
GENERIC TYPE	VENTURI TOWER	
SPECIFIC TYPE	VARIABLE-THROAT/BOTTOM-ENTRY PLUMB BOB	
TRADE NAME/COMMON NAME	N/A	
SHELL GENERIC MATERIAL	CARBON STEEL	
SHELL SPECIFIC MATERIAL	AISI 1110	
LINER GENERIC MATERIAL	NR	
LINER SPECIFIC MATERIAL	NR	
GAS CONTACTING DEVICE TYPE	NONE	
NUMBER OF CONTACTING ZONES	1	
INLET GAS TEMPERATURE - C	142.2	(288 F)
*** FGD SYSTEM		
** GENERAL DATA		
SALEABLE PRODUCT/THROWAWAY PRODUCT	SALEABLE PRODUCT	
SO2 REMOVAL MODE	WET SCRUBBING	
PROCESS TYPE	WELLMAN LORD	
SYSTEM SUPPLIER	DAVY MCKEE	
A-E FIRM	DAVY MCKEE	
DEVELOPMENT LEVEL	DEMONSTRATION	

NORTHERN INDIANA PUB SERVICE: DEAN H. MITCHELL 11 (CONT.)

NEW/RETROFIT	RETROFIT
UNIT DESIGN PARTICLE REMOVAL EFFICIENCY - %	98.50
UNIT DESIGN SO2 REMOVAL EFFICIENCY - %	90.00
ENERGY CONSUMPTION - %	12.1
CURRENT STATUS	8
TERMINATION	3/82
COMMERCIAL START-UP	6/77
INITIAL START-UP	7/76
CONTRACT AWARDED	6/72

** DESIGN AND OPERATING PARAMETERS

** QUENCHER/PRESATURATOR

CONSTRUCTION MATERIAL GENERIC TYPE	NR
CONSTRUCTION MATERIAL SPECIFIC TYPE	NR

** ABSORBER

NUMBER	1
GENERIC TYPE	TRAY TOWER
SPECIFIC TYPE	VALVE TRAY
TRADE NAME/COMMON TYPE	BUBBLE CAP TRAY TOWER
SUPPLIER	DAVY MCKEE
SHELL GENERIC MATERIAL	CARBON STEEL
SHELL SPECIFIC MATERIAL	AISI 1110
SHELL MATERIAL TRADE NAME/COMMON TYPE	N/A
LINER GENERIC MATERIAL	INORGANIC
LINER SPECIFIC MATERIAL	PREFIRED BRICK/SHAPES
LINER MATERIAL TRADE NAME/COMMON TYPE	ACID-RESISTANT BRICK (LOW H2O ABSORPTION)
GAS CONTACTING DEVICE TYPE	VALVE TRAYS
NUMBER OF CONTACTING ZONES	3
GAS-SIDE PRESSURE DROP - KPA	3.0 (12.0 IN-H2O)
INLET GAS FLOW - CU. M/S	198.20 (420000 ACFM)
SO2 REMOVAL EFFICIENCY - %	91.0

** MIST ELIMINATOR

PRE-MIST ELIMINATOR/MIST ELIMINATOR	NR
GENERIC TYPE	NR
SPECIFIC TYPE	NR
TRADE NAME/COMMON TYPE	NR
CONSTRUCTION MATERIAL GENERIC TYPE	NR
CONSTRUCTION MATERIAL SPECIFIC TYPE	NR

** REHEATER

GENERIC TYPE	DIRECT COMBUSTION
SPECIFIC TYPE	NR
TRADE NAME/COMMON TYPE	NATURAL GAS
TEMPERATURE INCREASE - C	27.8 (50 F)
INLET FLUE GAS TEMPERATURE - C	54.4 (130 F)
CONSTRUCTION MATERIAL GENERIC TYPE	NR
CONSTRUCTION MATERIAL SPECIFIC TYPE	NR

** FANS

NUMBER	1
DESIGN	CENTRIFUGAL
FUNCTION	BOOSTER
APPLICATION	FORCED DRAFT
SERVICE	DRY
FLUE GAS FLOW RATE - CU.M/S	198.20 (420000 ACFM)
FLUE GAS TEMPERATURE - C	142.2 (288 F)
CONSTRUCTION MATERIAL GENERIC TYPE	CARBON STEEL

** FANS

NUMBER	2
DESIGN	CENTRIFUGAL
FUNCTION	UNIT
APPLICATION	FORCED DRAFT
SERVICE	DRY
CONSTRUCTION MATERIAL GENERIC TYPE	CARBON STEEL; HIGH ALLOY

NORTHERN INDIANA PUB SERVICE: DEAN H. MITCHELL 11 (CONT.)

** DAMPERS	
FUNCTION	NR
GENERIC TYPE	NR
SPECIFIC TYPE	NR
CONSTRUCTION MATERIAL GENERIC TYPE	NR
CONSTRUCTION MATERIAL SPECIFIC TYPE	NR
LINER GENERIC MATERIAL TYPE	NR
LINER SPECIFIC MATERIAL TYPE	NR
** DUCTWORK	
LOCATION	SCRUBBER INLET
SHELL GENERIC MATERIAL TYPE	CARBON STEEL
SHELL SPECIFIC MATERIAL TYPE	AISI 1110
LINER GENERIC MATERIAL TYPE	NONE
LINER SPECIFIC MATERIAL TYPE	N/A
** REAGENT PREPARATION EQUIPMENT	
FUNCTION	MIX TANK
DEVICE	N/A
DEVICE TYPE	AGITATED TANK
MANUFACTURER	AGITATED TANK
** TANKS	
SERVICE	NUMBER
-------	------
REAGENT PREP PRODUCT	****
ABSORBER RECYCLE	****
** PUMPS	
SERVICE	NUMBER
-------	------
DISSOLVING TANK TO ABSORBER FEED TAN	****
FLYASH PURGE TO POND TRANSFER	****
ABSORBER RECIRCULATION	3
EVAPORATOR-CRYSTALLIZER FEED	****
SLURRY FEED	****
** SOLIDS CONCENTRATING/DEWATERING	
DEVICE	CENTRIFUGE
NUMBER	1
*** SALEABLE BYPRODUCTS	
NATURE	ELEMENTAL SULFUR
QUALITY - %	99.9
*** SLUDGE	
** TREATMENT	
METHOD	N/A
DEVICE	N/A
PROPRIETARY PROCESS	N/A
** DISPOSAL	
NATURE	N/A
TYPE	NONE
** WATER BALANCE	
WATER LOOP TYPE	CLOSED
** FGD SPARE CAPACITY INDICES	
ABSORBER - %	.0
** FGD SPARE COMPONENT INDICES	
ABSORBER	.0

APPENDIX F
DESIGN AND PERFORMANCE DATA FOR DISCONTINUED DOMESTIC FGD SYSTEMS

COMPANY NAME	PACIFIC POWER & LIGHT	
PLANT NAME	JIM BRIDGER	
UNIT NUMBER	2A	
CITY	ROCK SPRINGS	
STATE	WYOMING	
REGULATORY CLASSIFICATION	B	
PARTICULATE EMISSION LIMITATION - NG/J	******	(****** LB/MMBTU)
SO2 EMISSION LIMITATION - NG/J	129.	(.300 LB/MMBTU)
NOX EMISSION LIMITATION - NG/J	******	(****** LB/MMBTU)
NET PLANT GENERATING CAPACITY - MW	*****	
GROSS UNIT GENERATING CAPACITY - MW	550	
NET UNIT GENERATING CAPACITY W/FGD - MW	*****	
NET UNIT GENERATING CAPACITY WO/FGD - MW	509	
EQUIVALENT SCRUBBED CAPACITY - MW	100	
** UNIT DATA - BOILER AND STACK		
BOILER SUPPLIER	COMBUSTION ENGINEERING	
BOILER TYPE	PULVERIZED COAL	
BOILER SERVICE LOAD	BASE	
DESIGN BOILER FLUE GAS FLOW - CU.M/S	1283.57	(2720000 ACFM)
BOILER FLUE GAS TEMPERATURE - C	*******	(**** F)
STACK HEIGHT - M	152.	(500 FT)
STACK SHELL	******	
STACK TOP DIAMETER - M	*******	(***** FT)
** FUEL DATA		
FUEL TYPE	COAL	
FUEL GRADE	SUBBITUMINOUS	
AVERAGE HEAT CONTENT - J/G	22330.	(9600 BTU/LB)
RANGE HEAT CONTENT - BTU/LB		******
AVERAGE ASH CONTENT - %	11.00	
RANGE ASH CONTENT - %	5.0-16.0	
AVERAGE MOISTURE CONTENT - %	17.00	
RANGE MOISTURE CONTENT - %	12.0-24.0	
AVERAGE SULFUR CONTENT - %	.56	
RANGE SULFUR CONTENT - %	0.2-0.9	
AVERAGE CHLORIDE CONTENT - %	********	
RANGE CHLORIDE CONTENT - %	******	
*** PARTICLE CONTROL		
** ESP		
NUMBER	1	
** PARTICLE SCRUBBER		
NUMBER	0	
GENERIC TYPE	NONE	
SPECIFIC TYPE	N/A	
TRADE NAME/COMMON NAME	N/A	
*** FGD SYSTEM		
** GENERAL DATA		
SALEABLE PRODUCT/THROWAWAY PRODUCT	THROWAWAY PRODUCT	
SO2 REMOVAL MODE	SPRAY DRYING	
PROCESS TYPE	LIME/SODIUM CARBONATE	
SYSTEM SUPPLIER	FLAKT	
A-E FIRM	FLAKT & PACIFIC POWER & LIGHT	
DEVELOPMENT LEVEL	DEMONSTRATION	
NEW/RETROFIT	RETROFIT	
UNIT DESIGN PARTICLE REMOVAL EFFICIENCY - %	99.30	
UNIT DESIGN SO2 REMOVAL EFFICIENCY - %	86.00	
CURRENT STATUS	8	
TERMINATION	1/83	
INITIAL START-UP	1/82	
CONTRACT AWARDED	12/80	

PACIFIC POWER & LIGHT: JIM BRIDGER 2A (CONT.)

** DESIGN AND OPERATING PARAMETERS

** QUENCHER/PRESATURATOR		
CONSTRUCTION MATERIAL GENERIC TYPE	NA	
CONSTRUCTION MATERIAL SPECIFIC TYPE	NA	
** ABSORBER		
NUMBER	1	
GENERIC TYPE	SPRAY DRYER	
SPECIFIC TYPE	NA	
TRADE NAME/COMMON TYPE	HYDRAULIC PRESSURE NOZZLE	
DIMENSIONS - FT	36 FT DIAMETER	
SHELL GENERIC MATERIAL	NA	
SHELL SPECIFIC MATERIAL	NA	
SHELL MATERIAL TRADE NAME/COMMON TYPE	NA	
LINER GENERIC MATERIAL	NA	
LINER SPECIFIC MATERIAL	NA	
LINER MATERIAL TRADE NAME/COMMON TYPE	NA	
INLET GAS TEMPERATURE - C	121.1	(250 F)
SO2 REMOVAL EFFICIENCY - %	86.0	
PARTICLE REMOVAL EFFICENCY - %	99.3	
** MIST ELIMINATOR		
PRE-MIST ELIMINATOR/MIST ELIMINATOR	NA	
GENERIC TYPE	NA	
SPECIFIC TYPE	NA	
TRADE NAME/COMMON TYPE	NA	
CONSTRUCTION MATERIAL GENERIC TYPE	NA	
CONSTRUCTION MATERIAL SPECIFIC TYPE	NA	
** REHEATER		
GENERIC TYPE	NA	
SPECIFIC TYPE	NA	
TRADE NAME/COMMON TYPE	NA	
CONSTRUCTION MATERIAL GENERIC TYPE	NA	
CONSTRUCTION MATERIAL SPECIFIC TYPE	NA	
** DAMPERS		
FUNCTION	NA	
GENERIC TYPE	NA	
SPECIFIC TYPE	NA	
CONSTRUCTION MATERIAL GENERIC TYPE	NA	
CONSTRUCTION MATERIAL SPECIFIC TYPE	NA	
LINER GENERIC MATERIAL TYPE	NA	
LINER SPECIFIC MATERIAL TYPE	NA	
** DUCTWORK		
SHELL GENERIC MATERIAL TYPE	NA	
SHELL SPECIFIC MATERIAL TYPE	NA	
LINER GENERIC MATERIAL TYPE	NA	
LINER SPECIFIC MATERIAL TYPE	NA	
** SOLIDS CONCENTRATING/DEWATERING		
DEVICE	NONE	

*** SLUDGE

** TREATMENT	
METHOD	NA
DEVICE	NA
PROPRIETARY PROCESS	NA
** DISPOSAL	
NATURE	FINAL
TYPE	LANDFILL

PACIFIC POWER & LIGHT: JIM BRIDGER 2A (CONT.)

** WATER BALANCE	
WATER LOOP TYPE	CLOSED

APPENDIX F
DESIGN AND PERFORMANCE DATA FOR DISCONTINUED DOMESTIC FGD SYSTEMS

COMPANY NAME	PHILADELPHIA ELECTRIC	
PLANT NAME	EDDYSTONE	
UNIT NUMBER	1A	
CITY	EDDYSTONE	
STATE	PENNSYLVANIA	
REGULATORY CLASSIFICATION	C	
PARTICULATE EMISSION LIMITATION - NG/J	******	(****** LB/MMBTU)
SO2 EMISSION LIMITATION - NG/J	******	(****** LB/MMBTU)
NOX EMISSION LIMITATION - NG/J	******	(****** LB/MMBTU)
NET PLANT GENERATING CAPACITY - MW	1395	
GROSS UNIT GENERATING CAPACITY - MW	120	
NET UNIT GENERATING CAPACITY W/FGD - MW	120	
NET UNIT GENERATING CAPACITY WO/FGD - MW	*****	
EQUIVALENT SCRUBBED CAPACITY - MW	120	
** UNIT DATA - BOILER AND STACK		
BOILER SUPPLIER	COMBUSTION ENGINEERING	
BOILER TYPE	******	
BOILER SERVICE LOAD	BASE	
DESIGN BOILER FLUE GAS FLOW - CU.M/S	437.45	(927000 ACFM)
BOILER FLUE GAS TEMPERATURE - C	157.2	(315 F)
STACK HEIGHT - M	76.	(249 FT)
STACK SHELL	CONCRETE	
STACK TOP DIAMETER - M	5.6	(18.5 FT)
** FUEL DATA		
FUEL TYPE	COAL	
FUEL GRADE	BITUMINOUS	
AVERAGE HEAT CONTENT - J/G	31634.	(13600 BTU/LB)
RANGE HEAT CONTENT - BTU/LB	******	
AVERAGE ASH CONTENT - %	9.40	
RANGE ASH CONTENT - %	******	
AVERAGE MOISTURE CONTENT - %	5.90	
RANGE MOISTURE CONTENT - %	******	
AVERAGE SULFUR CONTENT - %	2.60	
RANGE SULFUR CONTENT - %	******	
AVERAGE CHLORIDE CONTENT - %	********	
RANGE CHLORIDE CONTENT - %	******	
*** PARTICLE CONTROL		
** MECHANICAL COLLECTOR		
NUMBER	1	
** ESP		
NUMBER	1	
** PARTICLE SCRUBBER		
NUMBER	2	
INITIAL START-UP DATE	9/75	
GENERIC TYPE	VENTURI TOWER	
SPECIFIC TYPE	VARIABLE-THROAT/VERTICALLY-ADJUSTABLE ROD DECKS	
TRADE NAME/COMMON NAME	ROD SCRUBBER	
SUPPLIER	ENVIRONEERING	
DIMENSIONS - FT	14.0 X 25.0 X 53.0	
SHELL GENERIC MATERIAL	STAINLESS STEEL	
SHELL SPECIFIC MATERIAL	AUSTENITIC	
LINER GENERIC MATERIAL	NONE	
LINER SPECIFIC MATERIAL	N/A	
GAS CONTACTING DEVICE TYPE	NONE	
NUMBER OF CONTACTING ZONES	1	
L/G RATIO - LITER/CU.M	.6	(4.8 GAL/1000ACF)
PRESSURE DROP - KPA	.0	(.1 IN-H2O)
INLET GAS FLOW RATE - CU.M/S	145.8	(309000 ACFM)
INLET GAS TEMPERATURE - C	157.2	(315 F)
** PARTICLE SCRUBBER		
NUMBER	1	
INITIAL START-UP DATE	9/75	

PHILADELPHIA ELECTRIC: EDDYSTONE 1A (CONT.)

GENERIC TYPE	VENTURI TOWER	
SPECIFIC TYPE	VARIABLE-THROAT/ADJUSTABLE DRUM	
TRADE NAME/COMMON NAME	RADIAL FLOW VENTURI	
SUPPLIER	PEABODY-LURGI	
DIMENSIONS - FT	14.0 X 25.0 X 53.0	
SHELL GENERIC MATERIAL	STAINLESS STEEL	
SHELL SPECIFIC MATERIAL	AUSTENITIC	
LINER GENERIC MATERIAL	NONE	
LINER SPECIFIC MATERIAL	N/A	
GAS CONTACTING DEVICE TYPE	NONE	
NUMBER OF CONTACTING ZONES	1	
L/G RATIO - LITER/CU.M	.6	(4.8 GAL/1000ACF)
PRESSURE DROP - KPA	.0	(.1 IN-H2O)
INLET GAS FLOW RATE - CU.M/S	145.8	(309000 ACFM)
INLET GAS TEMPERATURE - C	157.2	(315 F)

*** FGD SYSTEM

** GENERAL DATA

SALEABLE PRODUCT/THROWAWAY PRODUCT	SALEABLE PRODUCT
SO2 REMOVAL MODE	WET SCRUBBING
PROCESS TYPE	MAGNESIUM OXIDE
PROCESS ADDITIVES	NONE
SYSTEM SUPPLIER	UNITED ENGINEERS
A-E FIRM	UNITED ENGINEERS & CONSTRUCTORS
DEVELOPMENT LEVEL	DEMONSTRATION
NEW/RETROFIT	RETROFIT
UNIT DESIGN PARTICLE REMOVAL EFFICIENCY - %	99.00
UNIT DESIGN SO2 REMOVAL EFFICIENCY - %	90.00
CURRENT STATUS	8
TERMINATION	12/79
COMMERCIAL START-UP	9/75
INITIAL START-UP	9/75
CONTRACT AWARDED	0/73

** DESIGN AND OPERATING PARAMETERS

** QUENCHER/PRESATURATOR

CONSTRUCTION MATERIAL GENERIC TYPE	NR
CONSTRUCTION MATERIAL SPECIFIC TYPE	NR

** ABSORBER

NUMBER	1	
GENERIC TYPE	PACKED TOWER	
SPECIFIC TYPE	GRID PACKING	
TRADE NAME/COMMON TYPE	N/A	
SUPPLIER	ENVIRONEERING, RILEY STOKER	
DIMENSIONS - FT	14.0 X 25.0 53.0	
SHELL GENERIC MATERIAL	CARBON STEEL	
SHELL SPECIFIC MATERIAL	HIGH STRENGTH LOW ALLOY (HSLA)	
SHELL MATERIAL TRADE NAME/COMMON TYPE	COR-TEN	
LINER GENERIC MATERIAL	ORGANIC	
LINER SPECIFIC MATERIAL	EPOXY	
LINER MATERIAL TRADE NAME/COMMON TYPE	FLAKELINE E	
GAS CONTACTING DEVICE TYPE	ROD DECKS	
NUMBER OF CONTACTING ZONES	2	
LIQUID RECIRCULATION RATE - LITER/S	843.	(13384 GPM)
L/G RATIO - L/CU.M	6.5	(48.5 GAL/1000 ACF)
GAS-SIDE PRESSURE DROP - KPA	2.5	(10.0 IN-H2O)
INLET GAS FLOW - CU. M/S	126.47	(268000 ACFM)
INLET GAS TEMPERATURE - C	51.7	(125 F)

** MIST ELIMINATOR

PRE-MIST ELIMINATOR/MIST ELIMINATOR	PRIMARY COLLECTOR	
GENERIC TYPE	IMPINGEMENT	
SPECIFIC TYPE	BAFFLE	
TRADE NAME/COMMON TYPE	CLOSED VANE	
CONFIGURATION	VERTICAL	
NUMBER OF STAGES	2	
NUMBER OF PASSES PER STAGE	2	
FREEBOARD DISTANCE - M	2.44	(8.0 FT)

PHILADELPHIA ELECTRIC: EDDYSTONE 1A (CONT.)

CONSTRUCTION MATERIAL GENERIC TYPE	ORGANIC
CONSTRUCTION MATERIAL SPECIFIC TYPE	FIBER-REINFORCED POLYESTER
WASH WATER SOURCE	FRESH
WASH FREQUENCY	INTERMITTENT
**** REHEATER**	
NUMBER	1
GENERIC TYPE	DIRECT COMBUSTION
SPECIFIC TYPE	IN-LINE BURNER
TRADE NAME/COMMON TYPE	OIL
TEMPERATURE INCREASE - C	57.2 (103 F)
INLET FLUE GAS TEMPERATURE - C	51.7 (125 F)
CONSTRUCTION MATERIAL GENERIC TYPE	NR
CONSTRUCTION MATERIAL SPECIFIC TYPE	NR
**** FANS**	
NUMBER	3
DESIGN	CENTRIFUGAL
SUPPLIER	BUFFALO FORGE
FUNCTION	UNIT
APPLICATION	INDUCED DRAFT
SERVICE	DRY
FLUE GAS FLOW RATE - CU.M/S	126.47 (268000 ACFM)
FLUE GAS TEMPERATURE - C	107.2 (225 F)
CONSTRUCTION MATERIAL GENERIC TYPE	NR
**** DAMPERS**	
FUNCTION	NR
GENERIC TYPE	NR
SPECIFIC TYPE	NR
CONSTRUCTION MATERIAL GENERIC TYPE	NR
CONSTRUCTION MATERIAL SPECIFIC TYPE	NR
LINER GENERIC MATERIAL TYPE	NR
LINER SPECIFIC MATERIAL TYPE	NR
**** DUCTWORK**	
LOCATION	SCRUBBER INLET
SHELL GENERIC MATERIAL TYPE	STAINLESS STEEL
SHELL SPECIFIC MATERIAL TYPE	AUSTENITIC
LINER GENERIC MATERIAL TYPE	NONE
LINER SPECIFIC MATERIAL TYPE	N/A
**** DUCTWORK**	
LOCATION	SCRUBBER OUTLET
SHELL GENERIC MATERIAL TYPE	STAINLESS STEEL
SHELL SPECIFIC MATERIAL TYPE	AUSTENITIC
LINER GENERIC MATERIAL TYPE	NONE
LINER SPECIFIC MATERIAL TYPE	N/A
**** REAGENT PREPARATION EQUIPMENT**	
FUNCTION	SLAKER
DEVICE	NR
DEVICE TYPE	NR
**** PUMPS**	

SERVICE	NUMBER
ABSORBER RECIRCULATION	2

**** SOLIDS CONCENTRATING/DEWATERING**	
DEVICE	THICKENER
NUMBER	1
DIMENSIONS - FT	40.0 DIA
OUTLET STREAM CHARACTERISTICS	25% SOLIDS
**** SOLIDS CONCENTRATING/DEWATERING**	
DEVICE	CENTRIFUGE
NUMBER	1

PHILADELPHIA ELECTRIC: EDDYSTONE 1A (CONT.)

*** SLUDGE

** TREATMENT

METHOD	DEWATERED	
DEVICE	N/A	
PROPRIETARY PROCESS	N/A	

** DISPOSAL

NATURE	N/A	
TYPE	NONE	
SITE TREATMENT	N/A	

** WATER BALANCE

WATER LOOP TYPE	OPEN	
MAKEUP WATER ADDITION - LITERS/S	8.3	(132 GPM)

** FGD SPARE CAPACITY INDICES

ABSORBER - %	.0

** FGD SPARE COMPONENT INDICES

ABSORBER	.0

APPENDIX F
DESIGN AND PERFORMANCE DATA FOR DISCONTINUED DOMESTIC FGD SYSTEMS

COMPANY NAME	POTOMAC ELECTRIC POWER	
PLANT NAME	DICKERSON	
UNIT NUMBER	3A	
CITY	DICKERSON	
STATE	MARYLAND	
REGULATORY CLASSIFICATION	E	
PARTICULATE EMISSION LIMITATION - NG/J	******	(****** LB/MMBTU)
SO2 EMISSION LIMITATION - NG/J	688.	(1.600 LB/MMBTU)
NOX EMISSION LIMITATION - NG/J	******	(****** LB/MMBTU)
NET PLANT GENERATING CAPACITY - MW	548	
GROSS UNIT GENERATING CAPACITY - MW	190	
NET UNIT GENERATING CAPACITY W/FGD - MW	178	
NET UNIT GENERATING CAPACITY WO/FGD - MW	182	
EQUIVALENT SCRUBBED CAPACITY - MW	95	
** UNIT DATA - BOILER AND STACK		
BOILER SUPPLIER	COMBUSTION ENGINEERING	
BOILER TYPE	PULVERIZED COAL	
BOILER SERVICE LOAD	BASE	
DESIGN BOILER FLUE GAS FLOW - CU.M/S	278.42	(590000 ACFM)
BOILER FLUE GAS TEMPERATURE - C	126.1	(259 F)
STACK HEIGHT - M	122.	(400 FT)
STACK SHELL	CONCRETE	
STACK TOP DIAMETER - M	*******	(***** FT)
** FUEL DATA		
FUEL TYPE	COAL	
FUEL GRADE	BITUMINOUS	
AVERAGE HEAT CONTENT - J/G	27214.	(11700 BTU/LB)
RANGE HEAT CONTENT - BTU/LB		******
AVERAGE ASH CONTENT - %	14.00	
RANGE ASH CONTENT - %	******	
AVERAGE MOISTURE CONTENT - %	********	
RANGE MOISTURE CONTENT - %	6.0-7.0	
AVERAGE SULFUR CONTENT - %	2.00	
RANGE SULFUR CONTENT - %	******	
AVERAGE CHLORIDE CONTENT - %	********	
RANGE CHLORIDE CONTENT - %	******	
*** PARTICLE CONTROL		
** MECHANICAL COLLECTOR		
NUMBER	0	
TYPE	NONE	
** FABRIC FILTER		
NUMBER	0	
TYPE	NONE	
** ESP		
NUMBER	1	
SUPPLIER	RESEARCH-COTTRELL	
PARTICLE REMOVAL EFFICENCY - %	97.5	
** PARTICLE SCRUBBER		
GENERIC TYPE	VENTURI TOWER	
SPECIFIC TYPE	VARIABLE-THROAT/TOP-ENTRY PLUMB BOB	
TRADE NAME/COMMON NAME	N/A	
SHELL GENERIC MATERIAL	CARBON STEEL	
SHELL SPECIFIC MATERIAL	AISI 1110	
LINER GENERIC MATERIAL	ORGANIC	
LINER SPECIFIC MATERIAL	FIBER-REINFORCED POLYESTER	
GAS CONTACTING DEVICE TYPE	NONE	
*** FGD SYSTEM		
** GENERAL DATA		
SALEABLE PRODUCT/THROWAWAY PRODUCT	SALEABLE PRODUCT	
SO2 REMOVAL MODE	WET SCRUBBING	

POTOMAC ELECTRIC POWER: DICKERSON 3A (CONT.)

PROCESS TYPE	MAGNESIUM OXIDE
PROCESS ADDITIVES	NONE
SYSTEM SUPPLIER	GE ENVIRONMENTAL SERVICES
A-E FIRM	GE ENVIRONMENTAL SERVICES
DEVELOPMENT LEVEL	DEMONSTRATION
NEW/RETROFIT	RETROFIT
UNIT DESIGN PARTICLE REMOVAL EFFICIENCY - %	99.30
UNIT DESIGN SO2 REMOVAL EFFICIENCY - %	90.00
ENERGY CONSUMPTION - %	2.1
CURRENT STATUS	8
TERMINATION	8/75
COMMERCIAL START-UP	7/74
INITIAL START-UP	9/73
CONTRACT AWARDED	7/71

** DESIGN AND OPERATING PARAMETERS

** QUENCHER/PRESATURATOR

CONSTRUCTION MATERIAL GENERIC TYPE	NR
CONSTRUCTION MATERIAL SPECIFIC TYPE	NR

** ABSORBER

NUMBER	1
GENERIC TYPE	VENTURI TOWER
SPECIFIC TYPE	VARIABLE-THROAT/TOP-ENTRY PLUMB BOB
TRADE NAME/COMMON TYPE	N/A
SUPPLIER	GE ENVIRONMENTAL SERVICES
SHELL GENERIC MATERIAL	CARBON STEEL
SHELL SPECIFIC MATERIAL	AISI 1110
SHELL MATERIAL TRADE NAME/COMMON TYPE	N/A
LINER GENERIC MATERIAL	ORGANIC
LINER SPECIFIC MATERIAL	GLASS FLAKE-FILLED POLYESTER
LINER MATERIAL TRADE NAME/COMMON TYPE	NR
GAS CONTACTING DEVICE TYPE	NONE
L/G RATIO - L/CU.M	5.3 (40.0 GAL/1000 ACF)
GAS-SIDE PRESSURE DROP - KPA	2.2 (9.0 IN-H2O)
SO2 REMOVAL EFFICIENCY - %	90.0

** MIST ELIMINATOR

PRE-MIST ELIMINATOR/MIST ELIMINATOR	PRIMARY COLLECTOR
NUMBER PER SYSTEM	2
GENERIC TYPE	IMPINGEMENT
SPECIFIC TYPE	BAFFLE
TRADE NAME/COMMON TYPE	CLOSED VANE
NUMBER OF STAGES	3
NUMBER OF PASSES PER STAGE	2
DISTANCE BETWEEN VANES - CM	5.1 (2.00 IN)
VANE ANGLES - DEGREES	45
PRESSURE DROP - KPA	.2 (1.0 IN-H2O)
SUPERFICAL GAS VELOCITY - M/S	3.0 (10.0 FT/S)
CONSTRUCTION MATERIAL GENERIC TYPE	ORGANIC
CONSTRUCTION MATERIAL SPECIFIC TYPE	FIBER-REINFORCED POLYESTER

** REHEATER

NUMBER	0
GENERIC TYPE	NONE
SPECIFIC TYPE	N/A
TRADE NAME/COMMON TYPE	N/A
CONSTRUCTION MATERIAL GENERIC TYPE	NONE
CONSTRUCTION MATERIAL SPECIFIC TYPE	N/A

** FANS

NUMBER	1
DESIGN	CENTRIFUGAL
FUNCTION	UNIT
APPLICATION	INDUCED DRAFT
SERVICE	WET
CONSTRUCTION MATERIAL GENERIC TYPE	HIGH ALLOY

POTOMAC ELECTRIC POWER: DICKERSON 3A (CONT.)

** DAMPERS	
FUNCTION	NR
GENERIC TYPE	NR
SPECIFIC TYPE	NR
CONSTRUCTION MATERIAL GENERIC TYPE	NR
CONSTRUCTION MATERIAL SPECIFIC TYPE	NR
LINER GENERIC MATERIAL TYPE	NR
LINER SPECIFIC MATERIAL TYPE	NR
** DUCTWORK	
SHELL GENERIC MATERIAL TYPE	NR
SHELL SPECIFIC MATERIAL TYPE	NR
LINER GENERIC MATERIAL TYPE	NR
LINER SPECIFIC MATERIAL TYPE	NR
** REAGENT PREPARATION EQUIPMENT	
FUNCTION	NR
DEVICE	NR
DEVICE TYPE	NR
** TANKS	
SERVICE	NUMBER
-------	------
REAGENT PREP PRODUCT	1
** PUMPS	
SERVICE	NUMBER
-------	------
NR	****
** SOLIDS CONCENTRATING/DEWATERING	
DEVICE	THICKENER
NUMBER	2
*** SLUDGE	
** TREATMENT	
METHOD	THICKENED
DEVICE	N/A
PROPRIETARY PROCESS	N/A
** DISPOSAL	
NATURE	N/A
TYPE	NONE
SITE TREATMENT	N/A
** PROCESS CONTROL AND INSTRUMENTATION	
CHEMICAL PARAMETERS	PH, PRESSURE DROP
CONTROL LEVELS	PH 7
MONITOR LOCATION	IN SECOND STAGE SYSTEM
PROCESS CONTROL MANNER	AUTOMATIC
PROCESS CHEMISTRY MODE	FEEDBACK

APPENDIX F
DESIGN AND PERFORMANCE DATA FOR DISCONTINUED DOMESTIC FGD SYSTEMS

COMPANY NAME	PUBLIC SERVICE OF COLORADO	
PLANT NAME	VALMONT	
UNIT NUMBER	5A	
CITY	VALMONT	
STATE	COLORADO	
REGULATORY CLASSIFICATION	D	
PARTICULATE EMISSION LIMITATION - NG/J	43.	(.100 LB/MMBTU)
SO2 EMISSION LIMITATION - NG/J	******	(****** LB/MMBTU)
NOX EMISSION LIMITATION - NG/J	******	(****** LB/MMBTU)
NET PLANT GENERATING CAPACITY - MW	274	
GROSS UNIT GENERATING CAPACITY - MW	166	
NET UNIT GENERATING CAPACITY W/FGD - MW	157	
NET UNIT GENERATING CAPACITY WO/FGD - MW	163	
EQUIVALENT SCRUBBED CAPACITY - MW	166	
** UNIT DATA - BOILER AND STACK		
BOILER SUPPLIER	COMBUSTION ENGINEERING	
BOILER TYPE	PULVERIZED COAL	
BOILER SERVICE LOAD	BASE	
DESIGN BOILER FLUE GAS FLOW - CU.M/S	436.98	(926000 ACFM)
BOILER FLUE GAS TEMPERATURE - C	126.7	(260 F)
STACK HEIGHT - M	******	(**** FT)
STACK SHELL	NR	
STACK TOP DIAMETER - M	*******	(***** FT)
** FUEL DATA		
FUEL TYPE	COAL	
FUEL GRADE	SUBBITUMINOUS	
AVERAGE HEAT CONTENT - J/G	25121.	(10800 BTU/LB)
RANGE HEAT CONTENT - BTU/LB		******
AVERAGE ASH CONTENT - %	6.00	
RANGE ASH CONTENT - %	5.4-7.0	
AVERAGE MOISTURE CONTENT - %	15.00	
RANGE MOISTURE CONTENT - %	12.7-18.3	
AVERAGE SULFUR CONTENT - %	.70	
RANGE SULFUR CONTENT - %	0.6-0.7	
AVERAGE CHLORIDE CONTENT - %	********	
RANGE CHLORIDE CONTENT - %	******	
*** PARTICLE CONTROL		
** MECHANICAL COLLECTOR		
NUMBER	1	
INLET FLUE GAS CAPACITY - CU.M/S	218.5	(463000 ACFM)
** FABRIC FILTER		
NUMBER	0	
TYPE	NONE	
** ESP		
NUMBER	1	
TYPE	COLD SIDE	
INLET FLUE GAS CAPACITY - CU.M/S	218.5	(463000 ACFM)
** PARTICLE SCRUBBER		
NUMBER	1	
INITIAL START-UP DATE	11/71	
GENERIC TYPE	PACKED TOWER	
SPECIFIC TYPE	MOBILE BED PACKING	
TRADE NAME/COMMON NAME	TURBULENT CONTACT ABSORBER	
SUPPLIER	AIR CORRECTION DIVISION, UOP	
SHELL GENERIC MATERIAL	CARBON STEEL	
SHELL SPECIFIC MATERIAL	AISI 1110	
LINER GENERIC MATERIAL	ORGANIC	
LINER SPECIFIC MATERIAL	NATURAL RUBBER	
GAS CONTACTING DEVICE TYPE	STAINLESS STEEL	
NUMBER OF CONTACTING ZONES	3	
L/G RATIO - LITER/CU.M	7.8	(58.3 GAL/1000ACF)
PRESSURE DROP - KPA	3.7	(15.0 IN-H2O)

PUBLIC SERVICE OF COLORADO: VALMONT 5A (CONT.)

SUPERFICIAL GAS VELOCITY - M/S	3.4	(11.0 FT/S)
INLET GAS FLOW RATE - CU.M/S	109.2	(231500 ACFM)
INLET GAS TEMPERATURE - C	132.8	(271 F)
SO2 REMOVAL EFFICENCY - %	45.0	
PARTICLE REMOVAL EFFICIENCY - %	96.0	

*** FGD SYSTEM

** GENERAL DATA

SALEABLE PRODUCT/THROWAWAY PRODUCT	THROWAWAY PRODUCT
SO2 REMOVAL MODE	WET SCRUBBING
PROCESS TYPE	LIMESTONE/ALKALINE FLYASH
PROCESS ADDITIVES	NONE
SYSTEM SUPPLIER	UOP/PUBLIC SERVICE OF COLORADO
A-E FIRM	STEARNS-ROGER
DEVELOPMENT LEVEL	EXPERIMENTAL
NEW/RETROFIT	RETROFIT
UNIT DESIGN PARTICLE REMOVAL EFFICIENCY - %	95.00
UNIT DESIGN SO2 REMOVAL EFFICIENCY - %	85.00
ENERGY CONSUMPTION - %	3.6
CURRENT STATUS	8
TERMINATION	3/75
INITIAL START-UP	10/74
CONTRACT AWARDED	0/72

** DESIGN AND OPERATING PARAMETERS

** QUENCHER/PRESATURATOR

CONSTRUCTION MATERIAL GENERIC TYPE	NR
CONSTRUCTION MATERIAL SPECIFIC TYPE	NR

** ABSORBER

NUMBER	1
NUMBER OF SPARES	0
GENERIC TYPE	PACKED TOWER
SPECIFIC TYPE	MOBILE BED PACKING
TRADE NAME/COMMON TYPE	TURBULENT CONTACT ABSORBER
SUPPLIER	AIR CORRECTION DIVISION, UOP
SHELL GENERIC MATERIAL	CARBON STEEL
SHELL SPECIFIC MATERIAL	AISI 1110
SHELL MATERIAL TRADE NAME/COMMON TYPE	N/A
LINER GENERIC MATERIAL	ORGANIC
LINER SPECIFIC MATERIAL	SYNTHETIC RUBBER
LINER MATERIAL TRADE NAME/COMMON TYPE	NEOPRENE LS-576
SO2 REMOVAL EFFICIENCY - %	77.5

** MIST ELIMINATOR

PRE-MIST ELIMINATOR/MIST ELIMINATOR	PRIMARY COLLECTOR	
GENERIC TYPE	IMPINGEMENT	
SPECIFIC TYPE	BAFFLE	
TRADE NAME/COMMON TYPE	CLOSED VANE	
CONFIGURATION	HORIZONTAL	
NUMBER OF STAGES	2	
NUMBER OF PASSES PER STAGE	7	
PRESSURE DROP - KPA	.1	(.5 IN-H2O)
CONSTRUCTION MATERIAL GENERIC TYPE	STAINLESS STEEL	
CONSTRUCTION MATERIAL SPECIFIC TYPE	NR	
WASH WATER SOURCE	SUPERNATANT	

** REHEATER

NUMBER	1	
GENERIC TYPE	IN-LINE	
SPECIFIC TYPE	STEAM	
TRADE NAME/COMMON TYPE	NR	
TEMPERATURE INCREASE - C	36.1	(65 F)
CONSTRUCTION MATERIAL GENERIC TYPE	NR	
CONSTRUCTION MATERIAL SPECIFIC TYPE	NR	

** FANS

DESIGN	CENTRIFUGAL
FUNCTION	BOOSTER

PUBLIC SERVICE OF COLORADO: VALMONT 5A (CONT.)

APPLICATION	FORCED DRAFT
SERVICE	DRY
CONSTRUCTION MATERIAL GENERIC TYPE	CARBON STEEL
** DAMPERS	
FUNCTION	NR
GENERIC TYPE	NR
SPECIFIC TYPE	NR
CONSTRUCTION MATERIAL GENERIC TYPE	NR
CONSTRUCTION MATERIAL SPECIFIC TYPE	NR
LINER GENERIC MATERIAL TYPE	NR
LINER SPECIFIC MATERIAL TYPE	NR
** DUCTWORK	
LOCATION	OUTLET
SHELL GENERIC MATERIAL TYPE	CARBON STEEL
SHELL SPECIFIC MATERIAL TYPE	AISI 1110
LINER GENERIC MATERIAL TYPE	NONE
LINER SPECIFIC MATERIAL TYPE	N/A
** REAGENT PREPARATION EQUIPMENT	
FUNCTION	WET BALL MILL
DEVICE	NR
DEVICE TYPE	NR
** TANKS	
SERVICE	NUMBER
-------	------
THICKENER OVERFLOW	1
** PUMPS	
SERVICE	NUMBER
-------	------
NR	****
** SOLIDS CONCENTRATING/DEWATERING	
DEVICE	THICKENER
*** SLUDGE	
** TREATMENT	
METHOD	BLEED
DEVICE	N/A
PROPRIETARY PROCESS	N/A
** DISPOSAL	
NATURE	FINAL
TYPE	POND
SITE TREATMENT	NONE
** WATER BALANCE	
WATER LOOP TYPE	CLOSED
EVAPORATION WATER LOSS - LITER/S	5.5 (88 GPM)

APPENDIX F
DESIGN AND PERFORMANCE DATA FOR DISCONTINUED DOMESTIC FGD SYSTEMS

COMPANY NAME	SOUTHERN CALIFORNIA EDISON	
PLANT NAME	MOHAVE	
UNIT NUMBER	1A	
CITY	LAUGHLIN	
STATE	NEVADA	
REGULATORY CLASSIFICATION	D	
PARTICULATE EMISSION LIMITATION - NG/J	28.	(.064 LB/MMBTU)
SO2 EMISSION LIMITATION - NG/J	64.	(.150 LB/MMBTU)
NOX EMISSION LIMITATION - NG/J	******	(****** LB/MMBTU)
NET PLANT GENERATING CAPACITY - MW	1580	
GROSS UNIT GENERATING CAPACITY - MW	790	
NET UNIT GENERATING CAPACITY W/FGD - MW	790	
NET UNIT GENERATING CAPACITY WO/FGD - MW	790	
EQUIVALENT SCRUBBED CAPACITY - MW	170	
** UNIT DATA - BOILER AND STACK		
BOILER SUPPLIER	COMBUSTION ENGINEERING	
BOILER TYPE	PULVERIZED COAL	
BOILER SERVICE LOAD	BASE	
DESIGN BOILER FLUE GAS FLOW - CU.M/S	********	(******* ACFM)
BOILER FLUE GAS TEMPERATURE - C	132.2	(270 F)
STACK HEIGHT - M	152.	(500 FT)
STACK SHELL	NR	
STACK TOP DIAMETER - M	*******	(***** FT)
** FUEL DATA		
FUEL TYPE	COAL	
FUEL GRADE	******	
AVERAGE HEAT CONTENT - J/G	26749.	(11500 BTU/LB)
RANGE HEAT CONTENT - BTU/LB		11000-12000
AVERAGE ASH CONTENT - %	10.00	
RANGE ASH CONTENT - %	******	
AVERAGE MOISTURE CONTENT - %	********	
RANGE MOISTURE CONTENT - %	******	
AVERAGE SULFUR CONTENT - %	.40	
RANGE SULFUR CONTENT - %	******	
AVERAGE CHLORIDE CONTENT - %	********	
RANGE CHLORIDE CONTENT - %	******	
*** PARTICLE CONTROL		
** MECHANICAL COLLECTOR		
NUMBER	0	
TYPE	NONE	
** FABRIC FILTER		
NUMBER	0	
TYPE	NONE	
** ESP		
NUMBER	1	
SUPPLIER	RESEARCH-COTTRELL	
PARTICLE REMOVAL EFFICENCY - %	97.2	
** PARTICLE SCRUBBER		
NUMBER	0	
GENERIC TYPE	NONE	
SPECIFIC TYPE	N/A	
TRADE NAME/COMMON NAME	N/A	
SHELL GENERIC MATERIAL	N/A	
SHELL SPECIFIC MATERIAL	N/A	
LINER GENERIC MATERIAL	N/A	
LINER SPECIFIC MATERIAL	N/A	
GAS CONTACTING DEVICE TYPE	N/A	
*** FGD SYSTEM		

SOUTHERN CALIFORNIA EDISON: MOHAVE 1A (CONT.)

** GENERAL DATA			
SALEABLE PRODUCT/THROWAWAY PRODUCT	THROWAWAY PRODUCT		
SO2 REMOVAL MODE	WET SCRUBBING		
PROCESS TYPE	LIMESTONE		
SYSTEM SUPPLIER	AIR CORRECTION DIVISION, UOP		
DEVELOPMENT LEVEL	PROTOTYPE		
NEW/RETROFIT	RETROFIT		
UNIT DESIGN PARTICLE REMOVAL EFFICIENCY - %	97.20		
ENERGY CONSUMPTION - %	.0		
CURRENT STATUS	8		
TERMINATION	7/75		
COMMERCIAL START-UP	1/74		
INITIAL START-UP	1/74		
** DESIGN AND OPERATING PARAMETERS			
** QUENCHER/PRESATURATOR			
CONSTRUCTION MATERIAL GENERIC TYPE	NR		
CONSTRUCTION MATERIAL SPECIFIC TYPE	NR		
** ABSORBER			
NUMBER	1		
GENERIC TYPE	PACKED TOWER		
SPECIFIC TYPE	MOBILE BED PACKING		
TRADE NAME/COMMON TYPE	TURBULENT CONTACT ABSORBER		
SUPPLIER	AIR CORRECTION DIVISION, UOP		
DIMENSIONS - FT	18.0 X 40.0 X 90.0		
SHELL GENERIC MATERIAL	CARBON STEEL		
SHELL SPECIFIC MATERIAL	AISI 1110		
SHELL MATERIAL TRADE NAME/COMMON TYPE	N/A		
LINER GENERIC MATERIAL	ORGANIC		
LINER SPECIFIC MATERIAL	NATURAL RUBBER		
LINER MATERIAL TRADE NAME/COMMON TYPE	BLACK NATURAL RUBBER		
GAS CONTACTING DEVICE TYPE	PLASTIC/RUBBER MOBILE BALLS		
NUMBER OF CONTACTING ZONES	4		
L/G RATIO - L/CU.M	11.1	(83.0	GAL/1000 ACF)
SUPERFICAL GAS VELOCITY - M/SEC	3.8	(12.6	FT/S)
INLET GAS FLOW - CU. M/S	212.35	(450000	ACFM)
SO2 REMOVAL EFFICIENCY - %	95.0		
PARTICLE REMOVAL EFFICENCY - %	93.0		
** MIST ELIMINATOR			
PRE-MIST ELIMINATOR/MIST ELIMINATOR	PRIMARY COLLECTOR		
GENERIC TYPE	NR		
SPECIFIC TYPE	NR		
TRADE NAME/COMMON TYPE	NR		
CONSTRUCTION MATERIAL GENERIC TYPE	NR		
CONSTRUCTION MATERIAL SPECIFIC TYPE	NR		
WASH FREQUENCY	CONTINUOUS		
** REHEATER			
NUMBER	1		
GENERIC TYPE	IN-LINE		
SPECIFIC TYPE	STEAM		
TRADE NAME/COMMON TYPE	NR		
TEMPERATURE INCREASE - C	30.6	(55	F)
INLET FLUE GAS TEMPERATURE - C	51.7	(125	F)
CONSTRUCTION MATERIAL GENERIC TYPE	NR		
CONSTRUCTION MATERIAL SPECIFIC TYPE	NR		
** FANS			
NUMBER	1		
DESIGN	CENTRIFUGAL		
FUNCTION	BOOSTER		
APPLICATION	NR		
SERVICE	NR		
CONSTRUCTION MATERIAL GENERIC TYPE	NR		

SOUTHERN CALIFORNIA EDISON: MOHAVE 1A (CONT.)

** DAMPERS	
FUNCTION	NR
GENERIC TYPE	NR
SPECIFIC TYPE	NR
CONSTRUCTION MATERIAL GENERIC TYPE	NR
CONSTRUCTION MATERIAL SPECIFIC TYPE	NR
LINER GENERIC MATERIAL TYPE	NR
LINER SPECIFIC MATERIAL TYPE	NR
** DUCTWORK	
SHELL GENERIC MATERIAL TYPE	NR
SHELL SPECIFIC MATERIAL TYPE	NR
LINER GENERIC MATERIAL TYPE	NR
LINER SPECIFIC MATERIAL TYPE	NR
** REAGENT PREPARATION EQUIPMENT	
FUNCTION	WET BALL MILL
DEVICE	COMPARTMENTED
DEVICE TYPE	NR
NUMBER	1

** PUMPS	
SERVICE	NUMBER
-------	------
NR	****
** SOLIDS CONCENTRATING/DEWATERING	
DEVICE	CENTRIFUGE
** SOLIDS CONCENTRATING/DEWATERING	
DEVICE	THICKENER
** SOLIDS CONCENTRATING/DEWATERING	
DEVICE	VACUUM FILTER

*** SLUDGE

** TREATMENT	
METHOD	FIXATION
DEVICE	PUG MILL
PROPRIETARY PROCESS	CONVERSION SYSTEMS (POZ-O-TEC)
** DISPOSAL	
NATURE	FINAL
TYPE	POND
LOCATION	ON-SITE
SITE TRANSPORTATION METHOD	TRUCK
SITE TREATMENT	NR

APPENDIX F
DESIGN AND PERFORMANCE DATA FOR DISCONTINUED DOMESTIC FGD SYSTEMS

COMPANY NAME	SOUTHERN CALIFORNIA EDISON	
PLANT NAME	MOHAVE	
UNIT NUMBER	2A	
CITY	LAUGHLIN	
STATE	NEVADA	
REGULATORY CLASSIFICATION	D	
PARTICULATE EMISSION LIMITATION - NG/J	28.	(.064 LB/MMBTU)
SO2 EMISSION LIMITATION - NG/J	64.	(.150 LB/MMBTU)
NOX EMISSION LIMITATION - NG/J	******	(****** LB/MMBTU)
NET PLANT GENERATING CAPACITY - MW	1580	
GROSS UNIT GENERATING CAPACITY - MW	790	
NET UNIT GENERATING CAPACITY W/FGD - MW	790	
NET UNIT GENERATING CAPACITY WO/FGD - MW	790	
EQUIVALENT SCRUBBED CAPACITY - MW	160	
** UNIT DATA - BOILER AND STACK		
BOILER SUPPLIER	COMBUSTION ENGINEERING	
BOILER TYPE	PULVERIZED COAL	
BOILER SERVICE LOAD	BASE	
DESIGN BOILER FLUE GAS FLOW - CU.M/S	********	(******* ACFM)
BOILER FLUE GAS TEMPERATURE - C	132.2	(270 F)
STACK HEIGHT - M	152.	(500 FT)
STACK SHELL	NR	
STACK TOP DIAMETER - M	*******	(***** FT)
** FUEL DATA		
FUEL TYPE	COAL	
FUEL GRADE	******	
AVERAGE HEAT CONTENT - J/G	26749.	(11500 BTU/LB)
RANGE HEAT CONTENT - BTU/LB		11000-12000
AVERAGE ASH CONTENT - %	10.00	
RANGE ASH CONTENT - %	******	
AVERAGE MOISTURE CONTENT - %	********	
RANGE MOISTURE CONTENT - %	******	
AVERAGE SULFUR CONTENT - %	.40	
RANGE SULFUR CONTENT - %	******	
AVERAGE CHLORIDE CONTENT - %	********	
RANGE CHLORIDE CONTENT - %	******	
*** PARTICLE CONTROL		
** MECHANICAL COLLECTOR		
NUMBER	0	
TYPE	NONE	
** FABRIC FILTER		
NUMBER	0	
TYPE	NONE	
** ESP		
NUMBER	1	
SUPPLIER	RESEARCH-COTTRELL	
PARTICLE REMOVAL EFFICENCY - %	97.2	
** PARTICLE SCRUBBER		
NUMBER	0	
GENERIC TYPE	NONE	
SPECIFIC TYPE	N/A	
TRADE NAME/COMMON NAME	N/A	
SHELL GENERIC MATERIAL	N/A	
SHELL SPECIFIC MATERIAL	N/A	
LINER GENERIC MATERIAL	N/A	
LINER SPECIFIC MATERIAL	N/A	
GAS CONTACTING DEVICE TYPE	N/A	
*** FGD SYSTEM		

SOUTHERN CALIFORNIA EDISON: MOHAVE 2A (CONT.)

** GENERAL DATA		
SALEABLE PRODUCT/THROWAWAY PRODUCT	THROWAWAY PRODUCT	
SO2 REMOVAL MODE	WET SCRUBBING	
PROCESS TYPE	LIME	
SYSTEM SUPPLIER	SO. CALIFORNIA EDISON/STEARNS-	
A-E FIRM	STEARNS-ROGER	
DEVELOPMENT LEVEL	PROTOTYPE	
NEW/RETROFIT	RETROFIT	
UNIT DESIGN PARTICLE REMOVAL EFFICIENCY - %	97.20	
ENERGY CONSUMPTION - %	.0	
CURRENT STATUS	8	
TERMINATION	2/75	
COMMERCIAL START-UP	11/73	
INITIAL START-UP	11/73	
** DESIGN AND OPERATING PARAMETERS		
** QUENCHER/PRESATURATOR		
CONSTRUCTION MATERIAL GENERIC TYPE	NR	
CONSTRUCTION MATERIAL SPECIFIC TYPE	NR	
** ABSORBER		
NUMBER	1	
GENERIC TYPE	SPRAY TOWER	
SPECIFIC TYPE	OPEN CROSSCURRENT SPRAY	
TRADE NAME/COMMON TYPE	HORIZONTAL SPRAY CHAMBER	
SUPPLIER	SO. CALIFORNIA EDISON/STEARNS-ROGER	
DIMENSIONS - FT	15.0 X 30.0 X 60.0	
SHELL GENERIC MATERIAL	CARBON STEEL	
SHELL SPECIFIC MATERIAL	AISI 1110	
SHELL MATERIAL TRADE NAME/COMMON TYPE	N/A	
LINER GENERIC MATERIAL	NR	
LINER SPECIFIC MATERIAL	NR	
LINER MATERIAL TRADE NAME/COMMON TYPE	NR	
GAS CONTACTING DEVICE TYPE	NONE	
NUMBER OF CONTACTING ZONES	4	
L/G RATIO - L/CU.M	4.0	(30.0 GAL/1000 ACF)
SUPERFICAL GAS VELOCITY - M/SEC	6.6	(21.6 FT/S)
INLET GAS FLOW - CU. M/S	212.35	(450000 ACFM)
SO2 REMOVAL EFFICIENCY - %	95.0	
PARTICLE REMOVAL EFFICENCY - %	93.0	
** MIST ELIMINATOR		
PRE-MIST ELIMINATOR/MIST ELIMINATOR	PRIMARY COLLECTOR	
GENERIC TYPE	NR	
SPECIFIC TYPE	NR	
TRADE NAME/COMMON TYPE	NR	
CONFIGURATION	VERTICAL	
NUMBER OF STAGES	1	
CONSTRUCTION MATERIAL GENERIC TYPE	NR	
CONSTRUCTION MATERIAL SPECIFIC TYPE	NR	
** REHEATER		
NUMBER	1	
GENERIC TYPE	INDIRECT HOT AIR	
SPECIFIC TYPE	EXTERNAL HEAT EXCHANGER	
TRADE NAME/COMMON TYPE	STEAM TUBE BUNDLE	
TEMPERATURE INCREASE - C	30.6	(55 F)
INLET FLUE GAS TEMPERATURE - C	48.9	(120 F)
CONSTRUCTION MATERIAL GENERIC TYPE	NR	
CONSTRUCTION MATERIAL SPECIFIC TYPE	NR	
** FANS		
NUMBER	1	
DESIGN	CENTRIFUGAL	
FUNCTION	BOOSTER	
APPLICATION	NR	
SERVICE	NR	
CONSTRUCTION MATERIAL GENERIC TYPE	NR	

SOUTHERN CALIFORNIA EDISON: MOHAVE 2A (CONT.)

** DAMPERS	
FUNCTION	NR
GENERIC TYPE	NR
SPECIFIC TYPE	NR
CONSTRUCTION MATERIAL GENERIC TYPE	NR
CONSTRUCTION MATERIAL SPECIFIC TYPE	NR
LINER GENERIC MATERIAL TYPE	NR
LINER SPECIFIC MATERIAL TYPE	NR
** DUCTWORK	
SHELL GENERIC MATERIAL TYPE	NR
SHELL SPECIFIC MATERIAL TYPE	NR
LINER GENERIC MATERIAL TYPE	NR
LINER SPECIFIC MATERIAL TYPE	NR
** REAGENT PREPARATION EQUIPMENT	
FUNCTION	SLAKER
DEVICE	NR
DEVICE TYPE	NR

SERVICE	NUMBER
-------	------
NR	****

** SOLIDS CONCENTRATING/DEWATERING	
DEVICE	NR
*** SLUDGE	
** TREATMENT	
METHOD	FIXATION
DEVICE	MIX TANK
PROPRIETARY PROCESS	DRAVO (CALCILOX)
** DISPOSAL	
NATURE	FINAL
TYPE	POND
SITE TREATMENT	CLAY LINING
** WATER BALANCE	
WATER LOOP TYPE	CLOSED

APPENDIX F
DESIGN AND PERFORMANCE DATA FOR DISCONTINUED DOMESTIC FGD SYSTEMS

COMPANY NAME	ST. JOE ZINC	
PLANT NAME	G.F. WEATON	
UNIT NUMBER	1	
CITY	MONACA	
STATE	PENNSYLVANIA	
REGULATORY CLASSIFICATION	D	
PARTICULATE EMISSION LIMITATION - NG/J	43.	(.100 LB/MMBTU)
SO2 EMISSION LIMITATION - NG/J	516.	(1.200 LB/MMBTU)
NOX EMISSION LIMITATION - NG/J	******	(****** LB/MMBTU)
NET PLANT GENERATING CAPACITY - MW	120	
GROSS UNIT GENERATING CAPACITY - MW	60	
NET UNIT GENERATING CAPACITY W/FGD - MW	*****	
NET UNIT GENERATING CAPACITY WO/FGD - MW	*****	
EQUIVALENT SCRUBBED CAPACITY - MW	60	
** UNIT DATA - BOILER AND STACK		
BOILER SUPPLIER	COMBUSTION ENGINEERING	
BOILER TYPE	PULVERIZED COAL	
BOILER SERVICE LOAD	******	
DESIGN BOILER FLUE GAS FLOW - CU.M/S	75.03	(159000 ACFM)
BOILER FLUE GAS TEMPERATURE - C	148.9	(300 F)
STACK HEIGHT - M	23.	(75 FT)
STACK SHELL	FIBERGLASS	
STACK TOP DIAMETER - M	3.2	(10.5 FT)
** FUEL DATA		
FUEL TYPE	COAL	
FUEL GRADE	BITUMINOUS	
AVERAGE HEAT CONTENT - J/G	29075.	(12500 BTU/LB)
RANGE HEAT CONTENT - BTU/LB		******
AVERAGE ASH CONTENT - %	11.50	
RANGE ASH CONTENT - %	******	
AVERAGE MOISTURE CONTENT - %	********	
RANGE MOISTURE CONTENT - %	******	
AVERAGE SULFUR CONTENT - %	2.00	
RANGE SULFUR CONTENT - %	2.0-4.5	
AVERAGE CHLORIDE CONTENT - %	.20	
RANGE CHLORIDE CONTENT - %	******	
*** PARTICLE CONTROL		
** ESP		
NUMBER	2	
TYPE	COLD SIDE	
INLET FLUE GAS TEMPERATURE - C	148.9	(300 F)
PARTICLE REMOVAL EFFICENCY - %	99.6	
** PARTICLE SCRUBBER		
NUMBER	0	
GENERIC TYPE	NONE	
SPECIFIC TYPE	N/A	
TRADE NAME/COMMON NAME	N/A	
SHELL GENERIC MATERIAL	N/A	
SHELL SPECIFIC MATERIAL	N/A	
LINER GENERIC MATERIAL	N/A	
LINER SPECIFIC MATERIAL	N/A	
GAS CONTACTING DEVICE TYPE	N/A	
*** FGD SYSTEM		
** GENERAL DATA		
SALEABLE PRODUCT/THROWAWAY PRODUCT	SALEABLE PRODUCT	
SO2 REMOVAL MODE	WET SCRUBBING	
PROCESS TYPE	CITRATE	
SYSTEM SUPPLIER	MORRISON & KNUDSEN/U.S.B.M.	
A-E FIRM	MORRISON & KNUDSEN	
DEVELOPMENT LEVEL	PROTOTYPE	
NEW/RETROFIT	RETROFIT	
UNIT DESIGN PARTICLE REMOVAL EFFICIENCY - %	99.60	

ST. JOE ZINC: G.F. WEATON 1 (CONT.)

UNIT DESIGN SO2 REMOVAL EFFICIENCY - %	90.00
CURRENT STATUS	8
TERMINATION	9/82
COMMERCIAL START-UP	1/80
INITIAL START-UP	11/79
CONTRACT AWARDED	0/77

** DESIGN AND OPERATING PARAMETERS

** QUENCHER/PRESATURATOR

CONSTRUCTION MATERIAL GENERIC TYPE	NR
CONSTRUCTION MATERIAL SPECIFIC TYPE	NR

** ABSORBER

NUMBER	1
GENERIC TYPE	PACKED TOWER
SPECIFIC TYPE	FIXED BED PACKING
TRADE NAME/COMMON TYPE	N/A
DIMENSIONS - FT	26.0 DIA X 85.0
SHELL GENERIC MATERIAL	CARBON STEEL
SHELL SPECIFIC MATERIAL	AISI 1110
SHELL MATERIAL TRADE NAME/COMMON TYPE	N/A
LINER GENERIC MATERIAL	ORGANIC
LINER SPECIFIC MATERIAL	VINLY ESTER
LINER MATERIAL TRADE NAME/COMMON TYPE	NR
GAS CONTACTING DEVICE TYPE	INTALOX SADDLE
NUMBER OF CONTACTING ZONES	1
LIQUID RECIRCULATION RATE - LITER/S	283. (4500 GPM)
INLET GAS FLOW - CU. M/S	73.62 (156000 ACFM)
INLET GAS TEMPERATURE - C	48.9 (120 F)
SO2 REMOVAL EFFICIENCY - %	90.0

** MIST ELIMINATOR

PRE-MIST ELIMINATOR/MIST ELIMINATOR	PRIMARY COLLECTOR
NUMBER PER SYSTEM	2
GENERIC TYPE	IMPINGEMENT
SPECIFIC TYPE	BAFFLE
TRADE NAME/COMMON TYPE	CLOSED VANE
CONSTRUCTION MATERIAL GENERIC TYPE	ORGANIC
CONSTRUCTION MATERIAL SPECIFIC TYPE	POLYVINYL CHLORIDE

** REHEATER

NUMBER	1
GENERIC TYPE	INDIRECT HOT AIR
SPECIFIC TYPE	EXTERNAL HEAT EXCHANGER
TRADE NAME/COMMON TYPE	STEAM TUBE BUNDLE
CONSTRUCTION MATERIAL GENERIC TYPE	NR
CONSTRUCTION MATERIAL SPECIFIC TYPE	NR

** FANS

NUMBER	1
DESIGN	CENTRIFUGAL
FUNCTION	BOOSTER
APPLICATION	FORCED DRAFT
SERVICE	DRY
CONSTRUCTION MATERIAL GENERIC TYPE	CARBON STEEL

** DAMPERS

FUNCTION	NR
GENERIC TYPE	NR
SPECIFIC TYPE	NR
CONSTRUCTION MATERIAL GENERIC TYPE	NR
CONSTRUCTION MATERIAL SPECIFIC TYPE	NR
LINER GENERIC MATERIAL TYPE	NR
LINER SPECIFIC MATERIAL TYPE	NR

** DUCTWORK

SHELL GENERIC MATERIAL TYPE	NR
SHELL SPECIFIC MATERIAL TYPE	NR
LINER GENERIC MATERIAL TYPE	NR
LINER SPECIFIC MATERIAL TYPE	NR

ST. JOE ZINC: G.F. WEATON 1 (CONT.)

** REAGENT PREPARATION EQUIPMENT	
FUNCTION	MIX TANK
DEVICE	N/A
DEVICE TYPE	AGITATED TANK
** TANKS	
SERVICE	NUMBER
-------	------
SALEABLE BYPRODUCT	3
REAGENT PREP PRODUCT	1
MAKEUP WATER	1
** PUMPS	
SERVICE	NUMBER
-------	------
SULFUR SLURRY	2
LEAN SOLUTION	2
******	1
SULFUR TRANSFER	1
SCRUBBER RECIRCULATION	4
SULFUR LOADING	1
RICH CITRATE SOLUTION	2
** SOLIDS CONCENTRATING/DEWATERING	
DEVICE	NONE
*** SALEABLE BYPRODUCTS	
NATURE	ELEMENTAL SULFUR
QUALITY - %	99.5
*** SLUDGE	
** TREATMENT	
METHOD	N/A
DEVICE	N/A.
PROPRIETARY PROCESS	N/A
** DISPOSAL	
NATURE	N/A
TYPE	NONE
SITE TREATMENT	N/A
** WATER BALANCE	
WATER LOOP TYPE	CLOSED
** FGD SPARE CAPACITY INDICES	
ABSORBER - %	.0
** FGD SPARE COMPONENT INDICES	
ABSORBER	.0

APPENDIX F
DESIGN AND PERFORMANCE DATA FOR DISCONTINUED DOMESTIC FGD SYSTEMS

COMPANY NAME	TENNESSEE VALLEY AUTHORITY	
PLANT NAME	SHAWNEE	
UNIT NUMBER	10A	
CITY	PADUCAH	
STATE	KENTUCKY	
REGULATORY CLASSIFICATION	E	
PARTICULATE EMISSION LIMITATION - NG/J	43.	(.100 LB/MMBTU)
SO2 EMISSION LIMITATION - NG/J	516.	(1.200 LB/MMBTU)
NOX EMISSION LIMITATION - NG/J	******	(****** LB/MMBTU)
NET PLANT GENERATING CAPACITY - MW	1750	
GROSS UNIT GENERATING CAPACITY - MW	10	
NET UNIT GENERATING CAPACITY W/FGD - MW	10	
NET UNIT GENERATING CAPACITY WO/FGD - MW	*****	
EQUIVALENT SCRUBBED CAPACITY - MW	10	
** UNIT DATA - BOILER AND STACK		
BOILER SUPPLIER	******	
BOILER TYPE	******	
BOILER SERVICE LOAD	******	
DESIGN BOILER FLUE GAS FLOW - CU.M/S	********	(******* ACFM)
BOILER FLUE GAS TEMPERATURE - C	*******	(**** F)
STACK HEIGHT - M	******	(**** FT)
STACK SHELL	NR	
STACK TOP DIAMETER - M	*******	(***** FT)
** FUEL DATA		
FUEL TYPE	COAL	
FUEL GRADE	BITUMINOUS	
AVERAGE HEAT CONTENT - J/G	******	(****** BTU/LB)
RANGE HEAT CONTENT - BTU/LB		******
AVERAGE ASH CONTENT - %	********	
RANGE ASH CONTENT - %	******	
AVERAGE MOISTUPE CONTENT - %	********	
RANGE MOISTURE CONTENT - %	******	
AVERAGE SULFUR CONTENT - %	2.90	
RANGE SULFUR CONTENT - %	******	
AVERAGE CHLORIDE CONTENT - %	********	
RANGE CHLORIDE CONTENT - %	******	
*** PARTICLE CONTROL		
** PARTICLE SCRUBBER		
GENERIC TYPE	PACKED TOWER	
SPECIFIC TYPE	MOBILE BED PACKING	
TRADE NAME/COMMON NAME	TURBULENT CONTACT ABSORBER	
SHELL GENERIC MATERIAL	NR	
SHELL SPECIFIC MATERIAL	NR	
LINER GENERIC MATERIAL	NR	
LINER SPECIFIC MATERIAL	NR	
GAS CONTACTING DEVICE TYPE	PLASTIC SPHERES	
*** FGD SYSTEM		
** GENERAL DATA		
SALEABLE PRODUCT/THROWAWAY PRODUCT	THROWAWAY PRODUCT	
SO2 REMOVAL MODE	WET SCRUBBING	
PROCESS TYPE	LIME/LIMESTONE	
PROCESS ADDITIVES	VARIABLE - TEST FACILITY	
SYSTEM SUPPLIER	AIR CORRECTION DIVISION, UOP	
A-E FIRM	BECHTEL	
DEVELOPMENT LEVEL	PROTOTYPE	
NEW/RETROFIT	RETROFIT	
UNIT DESIGN SO2 REMOVAL EFFICIENCY - %	90.00	
CURRENT STATUS	8	
TERMINATION	7/82	
INITIAL START-UP	4/72	

TENNESSEE VALLEY AUTHORITY: SHAWNEE 10A (CONT.)

** DESIGN AND OPERATING PARAMETERS

** QUENCHER/PRESATURATOR	
CONSTRUCTION MATERIAL GENERIC TYPE	NR
CONSTRUCTION MATERIAL SPECIFIC TYPE	NR
** ABSORBER	
NUMBER	1
GENERIC TYPE	PACKED TOWER
SPECIFIC TYPE	MOBILE BED PACKING
TRADE NAME/COMMON TYPE	TURBULENT CONTACT ABSORBER
SUPPLIER	AIR CORRECTION DIVISION, UOP
SHELL GENERIC MATERIAL	NR
SHELL SPECIFIC MATERIAL	NR
SHELL MATERIAL TRADE NAME/COMMON TYPE	NR
LINER GENERIC MATERIAL	NR
LINER SPECIFIC MATERIAL	NR
LINER MATERIAL TRADE NAME/COMMON TYPE	NR
GAS CONTACTING DEVICE TYPE	PLASTIC/RUBBER MOBILE BALLS
NUMBER OF CONTACTING ZONES	3
DISTANCE BETWEEN GAS CONTACTING ZONES - CM	12.7 (5.0IN)
INLET GAS FLOW - CU. M/S	16.52 (35000 ACFM)
INLET GAS TEMPERATURE - C	148.9 (300 F)
** MIST ELIMINATOR	
PRE-MIST ELIMINATOR/MIST ELIMINATOR	PRIMARY COLLECTOR
NUMBER PER SYSTEM	1
GENERIC TYPE	IMPINGEMENT
SPECIFIC TYPE	BAFFLE
TRADE NAME/COMMON TYPE	CLOSED VANE
CONSTRUCTION MATERIAL GENERIC TYPE	NR
CONSTRUCTION MATERIAL SPECIFIC TYPE	NR
WASH WATER SOURCE	SUPERNATANT .
WASH FREQUENCY	INTERMITTENT
** REHEATER	
GENERIC TYPE	DIRECT COMBUSTION
SPECIFIC TYPE	NR
TRADE NAME/COMMON TYPE	OIL
CONSTRUCTION MATERIAL GENERIC TYPE	NR
CONSTRUCTION MATERIAL SPECIFIC TYPE	NR
** FANS	
DESIGN	CENTRIFUGAL
FUNCTION	BOOSTER
APPLICATION	INDUCED DRAFT
SERVICE	DRY
CONSTRUCTION MATERIAL GENERIC TYPE	CARBON STEEL
** DAMPERS	
FUNCTION	NR
GENERIC TYPE	NR
SPECIFIC TYPE	NR
CONSTRUCTION MATERIAL GENERIC TYPE	NR
CONSTRUCTION MATERIAL SPECIFIC TYPE	NR
LINER GENERIC MATERIAL TYPE	NR
LINER SPECIFIC MATERIAL TYPE	NR
** DUCTWORK	
SHELL GENERIC MATERIAL TYPE	NR
SHELL SPECIFIC MATERIAL TYPE	NR
LINER GENERIC MATERIAL TYPE	NR
LINER SPECIFIC MATERIAL TYPE	NR
** REAGENT PREPARATION EQUIPMENT	
FUNCTION	NR
DEVICE	NR
DEVICE TYPE	NR

TENNESSEE VALLEY AUTHORITY: SHAWNEE 10A (CONT.)

** TANKS

SERVICE	NUMBER
ABSORBER RECYCLE	****

** PUMPS

SERVICE	NUMBER
NR	****

** SOLIDS CONCENTRATING/DEWATERING

DEVICE	CENTRIFUGE
NUMBER	1

** SOLIDS CONCENTRATING/DEWATERING

DEVICE	THICKENER
NUMBER	1

*** SLUDGE

** TREATMENT

METHOD	DEWATERED
DEVICE	N/A
PROPRIETARY PROCESS	N/A

** DISPOSAL

NATURE	FINAL
TYPE	LANDFILL
SITE TREATMENT	NONE

** WATER BALANCE

WATER LOOP TYPE	CLOSED

** FGD SPARE CAPACITY INDICES

ABSORBER - %	.0

** FGD SPARE COMPONENT INDICES

ABSORBER	.0

APPENDIX F
DESIGN AND PERFORMANCE DATA FOR DISCONTINUED DOMESTIC FGD SYSTEMS

COMPANY NAME	TENNESSEE VALLEY AUTHORITY	
PLANT NAME	SHAWNEE	
UNIT NUMBER	10B	
CITY	PADUCAH	
STATE	KENTUCKY	
REGULATORY CLASSIFICATION	E	
PARTICULATE EMISSION LIMITATION - NG/J	43.	(.100 LB/MMBTU)
SO2 EMISSION LIMITATION - NG/J	516.	(1.200 LB/MMBTU)
NOX EMISSION LIMITATION - NG/J	******	(****** LB/MMBTU)
NET PLANT GENERATING CAPACITY - MW	1750	
GROSS UNIT GENERATING CAPACITY - MW	10	
NET UNIT GENERATING CAPACITY W/FGD - MW	10	
NET UNIT GENERATING CAPACITY WO/FGD - MW	*****	
EQUIVALENT SCRUBBED CAPACITY - MW	10	
** UNIT DATA - BOILER AND STACK		
BOILER SUPPLIER	******	
BOILER TYPE	******	
BOILER SERVICE LOAD	******	
DESIGN BOILER FLUE GAS FLOW - CU.M/S	********	(******* ACFM)
BOILER FLUE GAS TEMPERATURE - C	*******	(**** F)
STACK HEIGHT - M	******	(**** FT)
STACK SHELL	NR	
STACK TOP DIAMETER - M	*******	(***** FT)
** FUEL DATA		
FUEL TYPE	COAL	
FUEL GRADE	BITUMINOUS	
AVERAGE HEAT CONTENT - J/G	******	(****** BTU/LB)
RANGE HEAT CONTENT - BTU/LB		******
AVERAGE ASH CONTENT - %	********	
RANGE ASH CONTENT - %	******	
AVERAGE MOISTURE CONTENT - %	********	
RANGE MOISTURE CONTENT - %	******	
AVERAGE SULFUR CONTENT - %	2.90	
RANGE SULFUR CONTENT - %	******	
AVERAGE CHLORIDE CONTENT - %	********	
RANGE CHLORIDE CONTENT - %	******	
*** PARTICLE CONTROL		
** PARTICLE SCRUBBER		
NUMBER	1	
INITIAL START-UP DATE	4/72	
GENERIC TYPE	VENTURI TOWER	
SPECIFIC TYPE	VARIABLE-THROAT/TOP-ENTRY PLUMB BOB	
TRADE NAME/COMMON NAME	N/A	
SUPPLIER	GE ENVIRONMENTAL SERVICES	
SHELL GENERIC MATERIAL	NR	
SHELL SPECIFIC MATERIAL	NR	
LINER GENERIC MATERIAL	NR	
LINER SPECIFIC MATERIAL	NR	
GAS CONTACTING DEVICE TYPE	NONE	
INLET GAS FLOW RATE - CU.M/S	1.7	(3500 ACFM)
INLET GAS TEMPERATURE - C	148.9	(300 F)
*** FGD SYSTEM		
** GENERAL DATA		
SALEABLE PRODUCT/THROWAWAY PRODUCT	THROWAWAY PRODUCT	
SO2 REMOVAL MODE	WET SCRUBBING	
PROCESS TYPE	LIME/LIMESTONE	
PROCESS ADDITIVES	VARIABLE - TEST FACILITY	
SYSTEM SUPPLIER	GE ENVIRONMENTAL SERVICES	
A-E FIRM	BECHTEL	
DEVELOPMENT LEVEL	PROTOTYPE	
NEW/RETROFIT	RETROFIT	
UNIT DESIGN SO2 REMOVAL EFFICIENCY - %	90.00	
CURRENT STATUS	8	

TENNESSEE VALLEY AUTHORITY: SHAWNEE 10B (CONT.)

TERMINATION	7/82
INITIAL START-UP	4/72

** DESIGN AND OPERATING PARAMETERS

** QUENCHER/PRESATURATOR

CONSTRUCTION MATERIAL GENERIC TYPE	NR
CONSTRUCTION MATERIAL SPECIFIC TYPE	NR

** ABSORBER

NUMBER	1
GENERIC TYPE	SPRAY TOWER
SPECIFIC TYPE	OPEN COUNTERCURRENT SPRAY
TRADE NAME/COMMON TYPE	N/A
SUPPLIER	GE ENVIRONMENTAL SERVICES
SHELL GENERIC MATERIAL	NR
SHELL SPECIFIC MATERIAL	NR
SHELL MATERIAL TRADE NAME/COMMON TYPE	NR
LINER GENERIC MATERIAL	NR
LINER SPECIFIC MATERIAL	NR
LINER MATERIAL TRADE NAME/COMMON TYPE	NR
GAS CONTACTING DEVICE TYPE	NONE
INLET GAS FLOW - CU. M/S	16.52 (35000 ACFM)
INLET GAS TEMPERATURE - C	148.9 (300 F)

** MIST ELIMINATOR

PRE-MIST ELIMINATOR/MIST ELIMINATOR	PRIMARY COLLECTOR
NUMBER PER SYSTEM	1
GENERIC TYPE	IMPINGEMENT
SPECIFIC TYPE	BAFFLE
TRADE NAME/COMMON TYPE	CLOSED VANE
CONSTRUCTION MATERIAL GENERIC TYPE	NR
CONSTRUCTION MATERIAL SPECIFIC TYPE	NR

** REHEATER

GENERIC TYPE	DIRECT COMBUSTION
SPECIFIC TYPE	NR
TRADE NAME/COMMON TYPE	OIL
CONSTRUCTION MATERIAL GENERIC TYPE	NR
CONSTRUCTION MATERIAL SPECIFIC TYPE	NR

** FANS

DESIGN	CENTRIFUGAL
FUNCTION	BOOSTER
APPLICATION	INDUCED DRAFT
SERVICE	DRY
CONSTRUCTION MATERIAL GENERIC TYPE	CARBON STEEL

** DAMPERS

FUNCTION	NR
GENERIC TYPE	NR
SPECIFIC TYPE	NR
CONSTRUCTION MATERIAL GENERIC TYPE	NR
CONSTRUCTION MATERIAL SPECIFIC TYPE	NR
LINER GENERIC MATERIAL TYPE	NR
LINER SPECIFIC MATERIAL TYPE	NR

** DUCTWORK

SHELL GENERIC MATERIAL TYPE	NR
SHELL SPECIFIC MATERIAL TYPE	NR
LINER GENERIC MATERIAL TYPE	NR
LINER SPECIFIC MATERIAL TYPE	NR

** REAGENT PREPARATION EQUIPMENT

FUNCTION	NR
DEVICE	NR
DEVICE TYPE	NR

TENNESSEE VALLEY AUTHORITY: SHAWNEE 10B (CONT.)

** TANKS

SERVICE	NUMBER
ABSORBER RECYCLE	****
SPARGER/OXIDIZER	****
NR	****

** PUMPS

SERVICE	NUMBER
NR	****

** SOLIDS CONCENTRATING/DEWATERING

DEVICE	NR

*** SLUDGE

** TREATMENT

METHOD	DEWATERED
DEVICE	N/A
PROPRIETARY PROCESS	N/A

** DISPOSAL

NATURE	FINAL
TYPE	LANDFILL
SITE TREATMENT	NONE

** WATER BALANCE

WATER LOOP TYPE	CLOSED

** FGD SPARE CAPACITY INDICES

ABSORBER - %	.0

** FGD SPARE COMPONENT INDICES

ABSORBER	.0

APPENDIX F
DESIGN AND PERFORMANCE DATA FOR DISCONTINUED DOMESTIC FGD SYSTEMS

COMPANY NAME	TENNESSEE VALLEY AUTHORITY	
PLANT NAME	SHAWNEE	
UNIT NUMBER	10C	
CITY	PADUCAH	
STATE	KENTUCKY	
REGULATORY CLASSIFICATION	D	
PARTICULATE EMISSION LIMITATION - NG/J	43.	(.100 LB/MMBTU)
SO2 EMISSION LIMITATION - NG/J	516.	(1.200 LB/MMBTU)
NOX EMISSION LIMITATION - NG/J	******	(****** LB/MMBTU)
NET PLANT GENERATING CAPACITY - MW	1750	
GROSS UNIT GENERATING CAPACITY - MW	10	
NET UNIT GENERATING CAPACITY W/FGD - MW	*****	
NET UNIT GENERATING CAPACITY WO/FGD - MW	*****	
EQUIVALENT SCRUBBED CAPACITY - MW	10	
** UNIT DATA - BOILER AND STACK		
BOILER SUPPLIER	BABCOCK & WILCOX	
BOILER TYPE	PULVERIZED COAL	
BOILER SERVICE LOAD	BASE	
DESIGN BOILER FLUE GAS FLOW - CU.M/S	********	(******* ACFM)
BOILER FLUE GAS TEMPERATURE - C	*******	(**** F)
STACK HEIGHT - M	244.	(800 FT)
STACK SHELL	NR	
STACK TOP DIAMETER - M	*******	(***** FT)
** FUEL DATA		
FUEL TYPE	COAL	
FUEL GRADE	BITUMINOUS	
AVERAGE HEAT CONTENT - J/G	******	(****** BTU/LB)
RANGE HEAT CONTENT - BTU/LB		******
AVERAGE ASH CONTENT - %	********	
RANGE ASH CONTENT - %	******	
AVERAGE MOISTURE CONTENT - %	********	
RANGE MOISTURE CONTENT - %	******	
AVERAGE SULFUR CONTENT - %	2.90	
RANGE SULFUR CONTENT - %	******	
AVERAGE CHLORIDE CONTENT - %	********	
RANGE CHLORIDE CONTENT - %	******	
*** PARTICLE CONTROL		
** PARTICLE SCRUBBER		
GENERIC TYPE	PACKED TOWER	
SPECIFIC TYPE	MOBILE BED PACKING	
TRADE NAME/COMMON NAME	TURBULENT CONTACT ABSORBER	
SHELL GENERIC MATERIAL	NR	
SHELL SPECIFIC MATERIAL	NR	
LINER GENERIC MATERIAL	NR	
LINER SPECIFIC MATERIAL	NR	
GAS CONTACTING DEVICE TYPE	PLASTIC SPHERES	
*** FGD SYSTEM		
** GENERAL DATA		
SALEABLE PRODUCT/THROWAWAY PRODUCT	THROWAWAY PRODUCT	
SO2 REMOVAL MODE	WET SCRUBBING	
PROCESS TYPE	LIME/LIMESTONE	
SYSTEM SUPPLIER	COMBUSTION ENGINEERING	
A-E FIRM	BECHTEL	
DEVELOPMENT LEVEL	PROTOTYPE	
NEW/RETROFIT	RETROFIT	
CURRENT STATUS	8	
TERMINATION	7/73	
INITIAL START-UP	4/72	
** DESIGN AND OPERATING PARAMETERS		

TENNESSEE VALLEY AUTHORITY: SHAWNEE 10C (CONT.)

** QUENCHER/PRESATURATOR	
CONSTRUCTION MATERIAL GENERIC TYPE	NR
CONSTRUCTION MATERIAL SPECIFIC TYPE	NR
** ABSORBER	
GENERIC TYPE	PACKED TOWER
SPECIFIC TYPE	STATIC BED PACKING
TRADE NAME/COMMON TYPE	MARBLE-BED SCRUBBER
SHELL GENERIC MATERIAL	NR
SHELL SPECIFIC MATERIAL	NR
SHELL MATERIAL TRADE NAME/COMMON TYPE	NR
LINER GENERIC MATERIAL	NR
LINER SPECIFIC MATERIAL	NR
LINER MATERIAL TRADE NAME/COMMON TYPE	NR
GAS CONTACTING DEVICE TYPE	GLASS MARBLES
INLET GAS FLOW - CU. M/S	14.16 (30000 ACFM)
** MIST ELIMINATOR	
PRE-MIST ELIMINATOR/MIST ELIMINATOR	NR
GENERIC TYPE	NR
SPECIFIC TYPE	NR
TRADE NAME/COMMON TYPE	NR
CONSTRUCTION MATERIAL GENERIC TYPE	NR
CONSTRUCTION MATERIAL SPECIFIC TYPE	NR
** REHEATER	
GENERIC TYPE	DIRECT COMBUSTION
SPECIFIC TYPE	NR
TRADE NAME/COMMON TYPE	OIL
CONSTRUCTION MATERIAL GENERIC TYPE	NR
CONSTRUCTION MATERIAL SPECIFIC TYPE	NR
** FANS	
DESIGN	CENTRIFUGAL
FUNCTION	BOOSTER
APPLICATION	INDUCED DRAFT
SERVICE	DRY
CONSTRUCTION MATERIAL GENERIC TYPE	CARBON STEEL
** DAMPERS	
FUNCTION	NR
GENERIC TYPE	NR
SPECIFIC TYPE	NR
CONSTRUCTION MATERIAL GENERIC TYPE	NR
CONSTRUCTION MATERIAL SPECIFIC TYPE	NR
LINER GENERIC MATERIAL TYPE	NR
LINER SPECIFIC MATERIAL TYPE	NR
** DUCTWORK	
SHELL GENERIC MATERIAL TYPE	NR
SHELL SPECIFIC MATERIAL TYPE	NR
LINER GENERIC MATERIAL TYPE	NR
LINER SPECIFIC MATERIAL TYPE	NR
** REAGENT PREPARATION EQUIPMENT	
FUNCTION	NR
DEVICE	NR
DEVICE TYPE	NR

** PUMPS	
SERVICE	NUMBER
-------	------
NR	****
** SOLIDS CONCENTRATING/DEWATERING	
DEVICE	VACUUM FILTER

*** SLUDGE

TENNESSEE VALLEY AUTHORITY: SHAWNEE 10C (CONT.)

** TREATMENT	
METHOD	DEWATERED
DEVICE	N/A
PROPRIETARY PROCESS	N/A
** DISPOSAL	
NATURE	FINAL
TYPE	LANDFILL
SITE TREATMENT	NONE

APPENDIX F
DESIGN AND PERFORMANCE DATA FOR DISCONTINUED DOMESTIC FGD SYSTEMS

COMPANY NAME	UNION ELECTRIC	
PLANT NAME	MEREMAC	
UNIT NUMBER	2	
CITY	N/A	
STATE	MISSOURI	
REGULATORY CLASSIFICATION	******	
PARTICULATE EMISSION LIMITATION - NG/J	******	(****** LB/MMBTU)
SO2 EMISSION LIMITATION - NG/J	******	(****** LB/MMBTU)
NOX EMISSION LIMITATION - NG/J	******	(****** LB/MMBTU)
NET PLANT GENERATING CAPACITY - MW	4135	
GROSS UNIT GENERATING CAPACITY - MW	140	
NET UNIT GENERATING CAPACITY W/FGD - MW	125	
NET UNIT GENERATING CAPACITY WO/FGD - MW	*****	
EQUIVALENT SCRUBBED CAPACITY - MW	140	
** UNIT DATA - BOILER AND STACK		
BOILER SUPPLIER	******	
BOILER TYPE	PULVERIZED COAL	
BOILER SERVICE LOAD	BASE	
DESIGN BOILER FLUE GAS FLOW - CU.M/S	********	(******* ACFM)
BOILER FLUE GAS TEMPERATURE - C	*******	(**** F)
STACK HEIGHT - M	******	(**** FT)
STACK SHELL	NR	
STACK TOP DIAMETER - M	*******	(***** FT)
** FUEL DATA		
FUEL TYPE	COAL	
FUEL GRADE	******	
AVERAGE HEAT CONTENT - J/G	******	(****** BTU/LB)
RANGE HEAT CONTENT - BTU/LB		******
AVERAGE ASH CONTENT - %	********	
RANGE ASH CONTENT - %	******	
AVERAGE MOISTURE CONTENT - %	********	
RANGE MOISTURE CONTENT - %	******	
AVERAGE SULFUR CONTENT - %	3.40	
RANGE SULFUR CONTENT - %	******	
AVERAGE CHLORIDE CONTENT - %	********	
RANGE CHLORIDE CONTENT - %	******	
*** PARTICLE CONTROL		
** PARTICLE SCRUBBER		
GENERIC TYPE	PACKED TOWER	
SPECIFIC TYPE	STATIC BED PACKING	
TRADE NAME/COMMON NAME	MARBLE-BED SCRUBBER	
SHELL GENERIC MATERIAL	NR	
SHELL SPECIFIC MATERIAL	NR	
LINER GENERIC MATERIAL	NR	
LINER SPECIFIC MATERIAL	NR	
GAS CONTACTING DEVICE TYPE	PLASTIC SPHERES	
*** FGD SYSTEM		
** GENERAL DATA		
SALEABLE PRODUCT/THROWAWAY PRODUCT	THROWAWAY PRODUCT	
SO2 REMOVAL MODE	WET SCRUBBING	
PROCESS TYPE	LIMESTONE	
SYSTEM SUPPLIER	COMBUSTION ENGINEERING	
DEVELOPMENT LEVEL	FULL SCALE	
NEW/RETROFIT	RETROFIT	
UNIT DESIGN PARTICLE REMOVAL EFFICIENCY - %	99.00	
UNIT DESIGN SO2 REMOVAL EFFICIENCY - %	83.00	
CURRENT STATUS	8	
TERMINATION	0/69	
INITIAL START-UP	3/68	
CONTRACT AWARDED	0/67	

UNION ELECTRIC: MEREMAC 2 (CONT.)

** DESIGN AND OPERATING PARAMETERS

** QUENCHER/PRESATURATOR	
CONSTRUCTION MATERIAL GENERIC TYPE	NR
CONSTRUCTION MATERIAL SPECIFIC TYPE	NR
** ABSORBER	
GENERIC TYPE	PACKED TOWER
SPECIFIC TYPE	STATIC BED PACKING
TRADE NAME/COMMON TYPE	MARBLE-BED SCRUBBER
SHELL GENERIC MATERIAL	NR
SHELL SPECIFIC MATERIAL	NR
SHELL MATERIAL TRADE NAME/COMMON TYPE	NR
LINER GENERIC MATERIAL	NR
LINER SPECIFIC MATERIAL	NR
LINER MATERIAL TRADE NAME/COMMON TYPE	NR
** MIST ELIMINATOR	
PRE-MIST ELIMINATOR/MIST ELIMINATOR	NR
GENERIC TYPE	NR
SPECIFIC TYPE	NR
TRADE NAME/COMMON TYPE	NR
CONSTRUCTION MATERIAL GENERIC TYPE	NR
CONSTRUCTION MATERIAL SPECIFIC TYPE	NR
** REHEATER	
GENERIC TYPE	NR
SPECIFIC TYPE	NR
TRADE NAME/COMMON TYPE	NR
CONSTRUCTION MATERIAL GENERIC TYPE	NR
CONSTRUCTION MATERIAL SPECIFIC TYPE	NR
** FANS	
DESIGN	NR
FUNCTION	NR
APPLICATION	NR
SERVICE	NR
CONSTRUCTION MATERIAL GENERIC TYPE	NR
** DAMPERS	
FUNCTION	NR
GENERIC TYPE	NR
SPECIFIC TYPE	NR
CONSTRUCTION MATERIAL GENERIC TYPE	NR
CONSTRUCTION MATERIAL SPECIFIC TYPE	NR
LINER GENERIC MATERIAL TYPE	NR
LINER SPECIFIC MATERIAL TYPE	NR
** DUCTWORK	
SHELL GENERIC MATERIAL TYPE	NR
SHELL SPECIFIC MATERIAL TYPE	NR
LINER GENERIC MATERIAL TYPE	NR
LINER SPECIFIC MATERIAL TYPE	NR
** REAGENT PREPARATION EQUIPMENT	
FUNCTION	WET BALL MILL
DEVICE	NR
DEVICE TYPE	NR

** PUMPS	
SERVICE	NUMBER
-------	------
NR	****

** SOLIDS CONCENTRATING/DEWATERING	
DEVICE	NR

*** SLUDGE

UNION ELECTRIC: MEREMAC 2 (CONT.)

** TREATMENT	
METHOD	NR
DEVICE	NR
PROPRIETARY PROCESS	NR
** DISPOSAL	
NATURE	FINAL
TYPE	NR
SITE TREATMENT	NR
** WATER BALANCE	
WATER LOOP TYPE	CLOSED

TECHNICAL REPORT DATA
(Please read Instructions on the reverse before completing)

1. REPORT NO.	2.	3. RECIPIENT'S ACCESSION NO.
EPA 340/1-85-014a		

4. TITLE AND SUBTITLE
Utility FGD Survey
October 1983 - September 1984
Volume 1

5. REPORT DATE
October 1984

6. PERFORMING ORGANIZATION CODE

7. AUTHOR(S)
M.T. Melia, R.S. McKibben, B.W. Pelsor

8. PERFORMING ORGANIZATION REPORT NO.

9. PERFORMING ORGANIZATION NAME AND ADDRESS
PEDCo Environmental, Inc.
11499 Chester Road
Cincinnati, OH 45246-0100

10. PROGRAM ELEMENT NO.

11. CONTRACT/GRANT NO.
68-02-3963, Task No. 46

12. SPONSORING AGENCY NAME AND ADDRESS
U.S. Environmental Protection Agency
Stationary Source Compliance Division (EN-341)
401 M Street, S.W.
Washington, D.C. 20460

13. TYPE OF REPORT AND PERIOD COVERED
Final, Oct. 1983-Sept. 1984

14. SPONSORING AGENCY CODE

15. SUPPLEMENTARY NOTES
Summarized in EPA 340/1-85-014 - Utility FGD Survey Summary
EPA Task Manager - Sonya Stelmack (202) 382-2851

16. ABSTRACT

This report, which is generated by a computerized data base system, represents a survey of operational and planned domestic utility flue gas desulfurization (FGD) system. The three volume set summarizes information contributed by the utility industry, system and equipment suppliers, system designers, research organizations, and regulatory agencies. The data cover system design, fuel characteristics, operating history, and actual system performance. Also included is a unit-by-unit discussion of problems and solutions associated with the boilers, scrubbers, and FGD systems.

The development status (operational, under construction, or in the planning stages), system supplier, process, waste disposal practice, and regulatory class are tabulated alphabetically by utility company. Simplified process flow diagrams of FGD systems, definitions, and a glossary of terms are attached to the report. Current data for domestic FGD systems show 124 systems in operation, 25 systems under construction, and 68 systems planned. The current FGD-controlled capacity in the United States is 47,255 MW.

17. KEY WORDS AND DOCUMENT ANALYSIS

a. DESCRIPTORS	b. IDENTIFIERS/OPEN ENDED TERMS	c. COSATI Field/Group

18. DISTRIBUTION STATEMENT	19. SECURITY CLASS *(This Report)*	21. NO. OF PAGES
Release unlimited	unclassified	
	20. SECURITY CLASS *(This page)*	22. PRICE
	unclassified	

EPA Form 2220-1 (Rev. 4-77) PREVIOUS EDITION IS OBSOLETE