EPA 340/1-77-007

MAY 1977

Stationary Source enforcement Series

INSPECTION MANUAL FOR ENFORCEMENT OF NEW SOURCE PERFORMANCE STANDARDS

STEEL PRODUCING ELECTRIC ARC FURNACES

U.S. ENVIRONMENTAL PROTECTION AGENCY

Office of Enforcement

Office of General Enforcement

Washington, D.C.20460

GCA-TR-76-31-G

INSPECTION MANUAL FOR THE ENFORCEMENT OF NEW SOURCE PERFORMANCE STANDARDS: STEEL PRODUCING ELECTRIC-ARC FURNACES

Final Report

by

James Sahagian

Paul F. Fennelly

Manuel Rei

Contract No. 68-01-3155
Technical Service Area 1
Task No. 5

EPA Project Officer: Mark Antell

Prepared for

U.S. ENVIRONMENTAL PROTECTION AGENCY
Division of Stationary Source Enforcement
Washington, D.C.

April 1977

The Enforcement Technical Guideline series of reports is issued by the Office of Enforcement, Environmental Protection Agency, to assist the Regional Offices in activities related to enforcement of implementation plans, new source emission standards, and hazardous emission standards to be developed under the Clean Air Act. Copies of Enforcement Technical Guideline reports are available - as supplies permit - from Air Pollution Technical Information Center, Environmental Protection Agency, Research Triangle Park, North Carolina 27711, or may be obtained, for a nominal cost, from the National Technical Information Service, 5285 Port Royal Road, Springfield, Virginia 22161.

This Final Report was furnished to the Environmental Protection Agency by the GCA Corporation, GCA/Technology Division, Bedford, Massachusetts 01730, in fulfillment of Contract No. 68-01-3155, Technical Service Area 1, Task No. 5. The opinions, findings, and conclusions expressed are those of the authors and not necessarily those of the Environmental Protection Agency or of the cooperating agencies. Mention of company or product names is not to be considered as an endorsement by the Environmental Protection Agency.

CONTENTS

Sections		Page
I	Introduction	1
II	Summary of New Source Performance Standards for Steelmaking Electric-Arc Furnaces	2
	Emission Standards	2
	Performance Testing	3
	Monitoring Requirements	5
	Record Keeping and Reporting	5
	References	7
III	Process Description	8
	Furnace Description	8
	Operating Practices	12
	Pollutant Emissions	20
	Ventilation Practices	24
	Emission Control Systems	27
	References	33
IV	Inspection Procedures	34
	Conduct of Inspection	35
	Operating Parameters to be Checked	38
	Inspection Checklist	40

CONTENTS (continued)

Sections		Page
	Inspection Follow-up Procedures	49
	References	51
V	Performance Test	52
	Process Operating Conditions	52
	Process Observations	54
	Emission Test Observations	54
	References	62
Appendixes		
A	Part 60 - Standards of Performance For New Stationary Sources - Electric Arc Furnaces in the Steel Industry	63
B	Method 9 - Visual Determination of the Opacity of Emissions From Stationary Sources	69

FIGURES

No.		Page
1	Electric-Arc Furnace Subhearth Construction	10
2	Cross-Sectional View of a Steelmaking Electric - Arc Furnace Indicating Typical Refractories Employed in (Left) an Acid Lining and (Right) a Basic Lining	11
3	Overhead and Vertical Schematic Diagrams of a Steelmaking Electric - Arc Furnace	13
4	Ventilation Systems for Electric Arc Furnaces	26

TABLES

No.		Page
1	Chemical Composition of Steelmaking Electric-Arc Furnace Dust	21
2	Size Distribution of Particulate Emissions From Steelmaking Electric-Arc Furnaces	21
3	Changes in Composition of Electric Furnace Dust During a Single Heat	22

SECTION I

INTRODUCTION

Pursuant to Section 111 of the Clean Air Act, (USC 1857 et. seq.) the Administrator of the Environmental Protection Agency (EPA) promulgated particulate and opacity standards for performance of new and modified Electric-Arc Furnaces. These proposed standards were issued in the Federal Register of October 21, 1974 and final standards became effective on September 23, 1975. The standards which were published in the Federal Register of September 23, 1975 apply to all sources whose construction or modification commenced after October 31, 1974.

Enforcement of these standards may be delegated by the EPA to individual state agencies for all sources except those owned by the U.S. Government. Each state must first, however, develop a program of inspection procedures for verifying compliance with the standards, and EPA must approve the program.

The purpose of this document is to provide guidelines for the appropriate enforcement agency in the development of inspection programs for Electric-Arc Furnaces which are covered by New Source Performance Standards (NSPS). Included are sections which explain the regulations, the process, control techniques and the responsibilities of the enforcement agency personnel.

SECTION II

SUMMARY OF NEW SOURCE PERFORMANCE STANDARDS FOR STEELMAKING ELECTRIC-ARC FURNACES[1]

Performance standards which are applicable for new and modified Electric-Arc Furnaces in the steel industry, the construction or modification of which was commenced after October 31, 1974, limit particulate emissions from the control device, the shop, and from dust handling equipment. They also specify that the opacity of these emissions not exceed a certain level for each specified emission point. The regulations were published in the September 23, 1975 Federal Register, Volume 40, Number 185. They include both maximum emission limits for particulate pollutants as well as standards for monitoring emissions and emission control equipment. They also include all pertinent definitions with regard to the EAF and the regulations. These standards do not apply to Electric-Arc Furnaces that use continuous feeding of prereduced ore pellets as the primary source of iron. A copy of the New Source Performance Standards for Steelmaking Electric-Arc Furnace is presented in Appendix A.

EMISSION STANDARDS

Allowable levels of furnace particulate emissions and shop opacity are outlined in the following sections. These levels are not to be exceeded on or after the date on which the required performance test is completed.

Particulate Matter

The New Source Performance Standard for particulate loading limits the emission from an electric-arc furnace emission control device to less than 12 mg/dscm (0.0052 gr/dscf).

Opacity

The New Source Performance Standards state that gases from the particulate control equipment may not exceed 3 percent opacity. Emissions from the furnace which escape the particulate control equipment and pass through the shop may not exceed 0 percent except: during charging emissions may exceed 0 percent but must be less than 20 percent opacity; and during tapping emissions may exceed 0 percent but must be less than 40 percent opacity. In some shops the roof is closed during the charging and tapping periods, preventing emissions from escaping until the roof is opened. For these sources, the respective charging and tapping opacity levels of 20 percent and 40 percent will be allowed in each case for the length of time defined by the charging and/or tapping periods.

Emissions from equipment handling the dust collected by particulate emission control devices may not exceed 10 percent opacity.

The primary means of determining compliance with opacity regulations is observation utilizing EPA Method 9. Opacity may also be determined by passing a light transverse through the effluent gas flow at a point near their exit, and measuring the intensity of the beam with a transmissometer. These data, however, are considered probative but not conclusive as evidence of compliance.

PERFORMANCE TESTING

Demonstration that the standards are being met is accomplished only by performance testing. The owner or operator of a new or modified steelmaking electric-arc furnace is required to conduct performance tests within a specified period after start-up and thereafter, from time to time, as specified by EPA.

Initial Performance Test

The initial performance test of a new facility must be conducted within 60 days after achieving the maximum production rate at which the EAF will be operated, but not later than 180 days after initial start-up. Further tests may be required at other times by the Administrator, as outlined in Section 114 of the Act. Thirty days must be allowed for prior notice to the EPA, to allow the Agency to designate an observer to witness the test.

Performance tests must be conducted as per the instructions given in the regulations, which are discussed in detail in Section IV of this manual. The test consists of three repetitions of the specified procedure. Performance of the facility is judged acceptable if, for each of the characteristics tested, the average value from the three repetitions is less than the NSPS standard value.

Necessary modifications in the details of the test methods may be made, if approved in advance by the EPA. A written report of the test would be furnished to the EPA.

Subsequent Performance Tests

Subsequent to the initial test, further performance tests may be required from time to time at the discretion of EPA. Alternatively, the Agency may decide to conduct performance tests. For this purpose the owner or operator is required to provide testing facilities, which include necessary utilities, sampling ports, safe platforms, and safe access to the sampling platform.

Performance testing subsequent to the initial test is most likely to be required when records indicate a relatively high frequency of occurrence of emission levels near, at, or above the NSPS levels.

MONTORING REQUIREMENTS

The opacity of the emissions discharged into the atmosphere from the control device(s) must be continuously monitored as described below.

Opacity Monitoring

The NSPS require that the owner or operator of a new or modified EAF will install, calibrate, maintain, and operate monitoring instruments to continuously measure the opacity of emissions discharged from the emission control device(s).

Process Monitoring

The NSPS require that the owner or operator of a new or modified EAF must install, calibrate, maintain, and operate monitoring device(s) which continuously records the volumetric flow rate through each separately ducted hood. The flow rate monitoring device(s) shall have an accuracy of $\pm$ 10 percent over its normal operating range, and may require calibration relative to EPA Methods 1 and 2.

The NSPS also require that the owner or operator install, calibrate, and maintain a monitoring device that continuously records the pressure in the free space in side electric-arc furnaces whose emissions are controlled via direct shell evacuation.

RECORD KEEPING AND REPORTING

The owner or operator of any EAF is required to maintain certain records, to furnish certain reports, and to notify EPA of certain occurrences, as follows.

Notifications Regarding Initial Start-Up

The owner or operator must notify EPA of the anticipated date of initial start-up of the facility not more than 60 days nor less than 30 days previous to the anticipated date. Notification of the actual start-up date must be postmarked within 15 days after such date. "Start-up" is defined as the operation of the facility for any purpose.

Records Regarding Start-Up, Shutdown, and Malfunction

The owner or operator shall maintain records of the occurrence and duration of any start-up, shutdown, or malfunction in the operation of the affected facility, including the emission control system and continuous monitoring systems. These records shall be maintained for at least 2 years following their occurrence.

The record should include the nature and cause of any malfunction, together with a notation as to corrective action and any measures undertaken to prevent recurrence of the malfunction.

In this connection, "start-up" refers to a renewed operation of the facility for any purpose; and "malfunction" is defined as any sudden, unavoidable failure of either the air pollution control equipment or the EAF to operate in a normal manner. Preventable failures, such as those which may have been caused by poor maintenance or careless operation, or by equivalent breakdown due to such causes, are not included in this definition.

Records Regarding Performance Testing

In order to facilitate conduct of performance tests by the Agency, the owner or operator is required to make available to the EPA, any records necessary to determine whether performance of the EAF is representative performance at the time of the test. Time and duration of each charge

and tap, as well as all flow rate data, pressure data, and opacity data required to be monitored should be maintained daily. A file of all measurements of opacity and particulate measurements shall be maintained by the operator. Appropriate measurements shall be reduced to necessary units of the applicable standards daily, and summarized and maintained for at least 2 years following the date of such measurements and summaries. These records should also be made available during inspections of the facility.

REFERENCE

1. Fed. Regist. 40(185). September 23, 1975. p. 43850-43854.

SECTION III

PROCESS DESCRIPTION

FURNACE DESCRIPTION

The direct-arc furnace (series-arc type) is the electric-arc furnace most commonly used today for steelmaking. This furnace was originally developed by Paul Heroult in France during the late 1800's. In this furnace, electric current passes from one electrode through an arc to the metal charge, through the charge, then from the charge through an arc to another electrode.[1]

Electric-arc furnaces are cylindrical vessels which are lined with refractory material, the composition of which is dependent upon the type of scrap metal being used and the type of steel being produced.[1,2]

Both the acid and basic processes for making steel in electric furnaces were used extensively during World War II. Since then, technical and economic obstacles to the use of select scrap and the increasing utilization of alloy steels have greatly decreased the use of acid-lined furnaces (acid process). Almost all arc furnaces used for ingot-steel production and a substantial number of the arc furnaces making steel castings are basic lined. These furnaces generally use a combination of both high and low alloy steel scrap and plain carbon steel scrap. Acid-lined electric-arc furnaces are seldom employed outside of steel foundries and forging shops. These furnaces are chiefly used for the production of straight carbon castings and to a lesser extent for the production of alloy steels.[1,2,4,6]

The bottoms of basic-lined arc furnaces consists of a burned magnesite brick subhearth with a working surface, 6 to 12 inches thick, of high magnesia ramming material. Basic arc furnace roofs are generally constructed of high-alumina brick, with high alumina rammed or castable materials for the center section around the electrodes. The bottoms of acid-lined arc furnaces consist of a silica brick subhearth with a working surface of ground ganister. The roofs are also constructed with silica brick with ground ganister around the electrodes. Schematic diagrams of both stadium type and inverted arch type subhearth construction are shown in Figure 1. Figure 2 presents a schematic cross-section of an electric-arc furnace with a stadium type subhearth construction, indicating typical refractories employed in (left) and acid lining and (right) a basic lining. Although only two electrodes are shown in the cross-sectional view, furnaces of this type usually have three electrodes.[1,2,8,10]

Electric-arc furnaces are equipped with a tight fitting roof consisting of a hollow circular ring which acts as a retainer for the dome-shaped refractory portion of the roof. Water is circulated through the interior of the hollow ring for cooling of both the ring and the adjacent roof refractories. There are usually three triangularly shaped holes in the roof to facilitate the raising and lowering of the carbon electrodes. Annular water cooled steel rings (electrode glands) are set on top of the refractory roof structure and surround the electrodes where they pass through the ports into the furnace. Electrodes are usually powered by a three-phase transformer equipped for varying the secondary voltage.[1,2,3,7]

Practically all modern steelmaking arc furnaces are top charged. There are two types of top charged furnace roof removal techniques: (1) the swing type where the roof is lifted and swung to one side in order to clear the top of the furnace shell and (2) the gantry lift type where the electrode masts and roof-raising mechanism are built into a gantry crane that travels on rails along the charging floor. Both mechanisms require

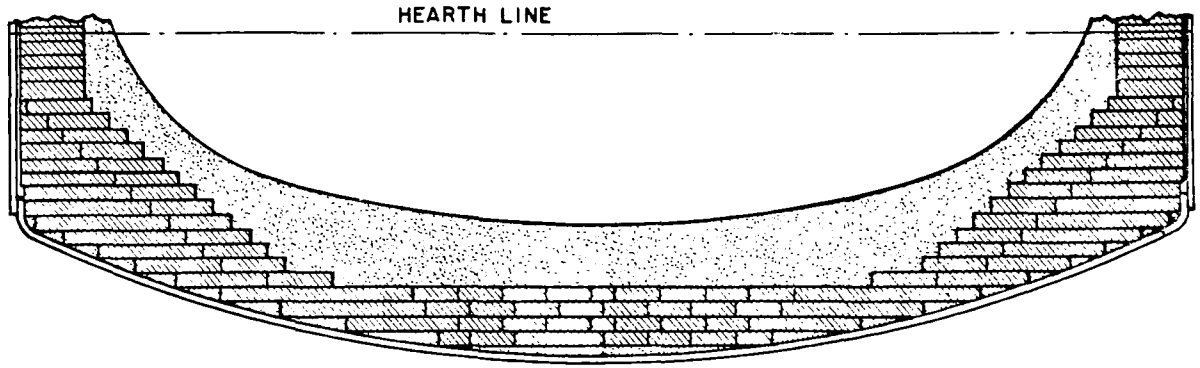

STADIUM-TYPE SUBHEARTH CONSTRUCTION

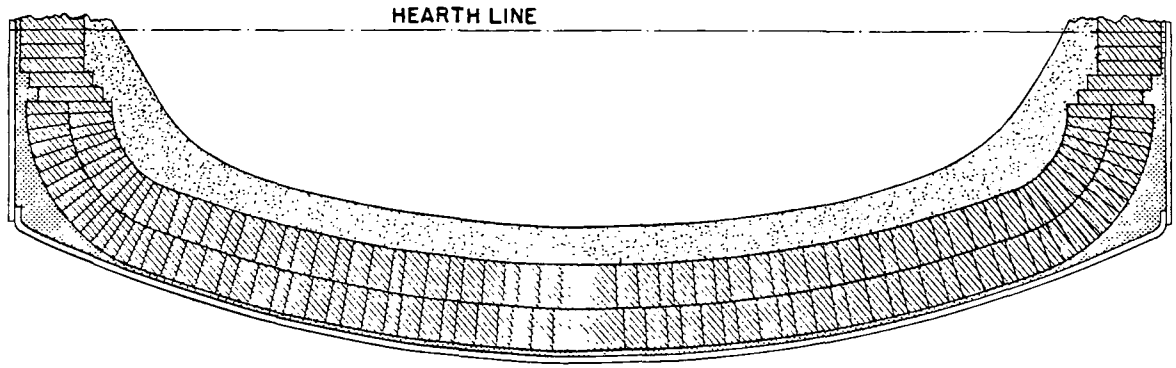

INVERTED-ARCH TYPE SUBHEARTH CONSTRUCTION

Figure 1. Electric-arc furnace subhearth construction.

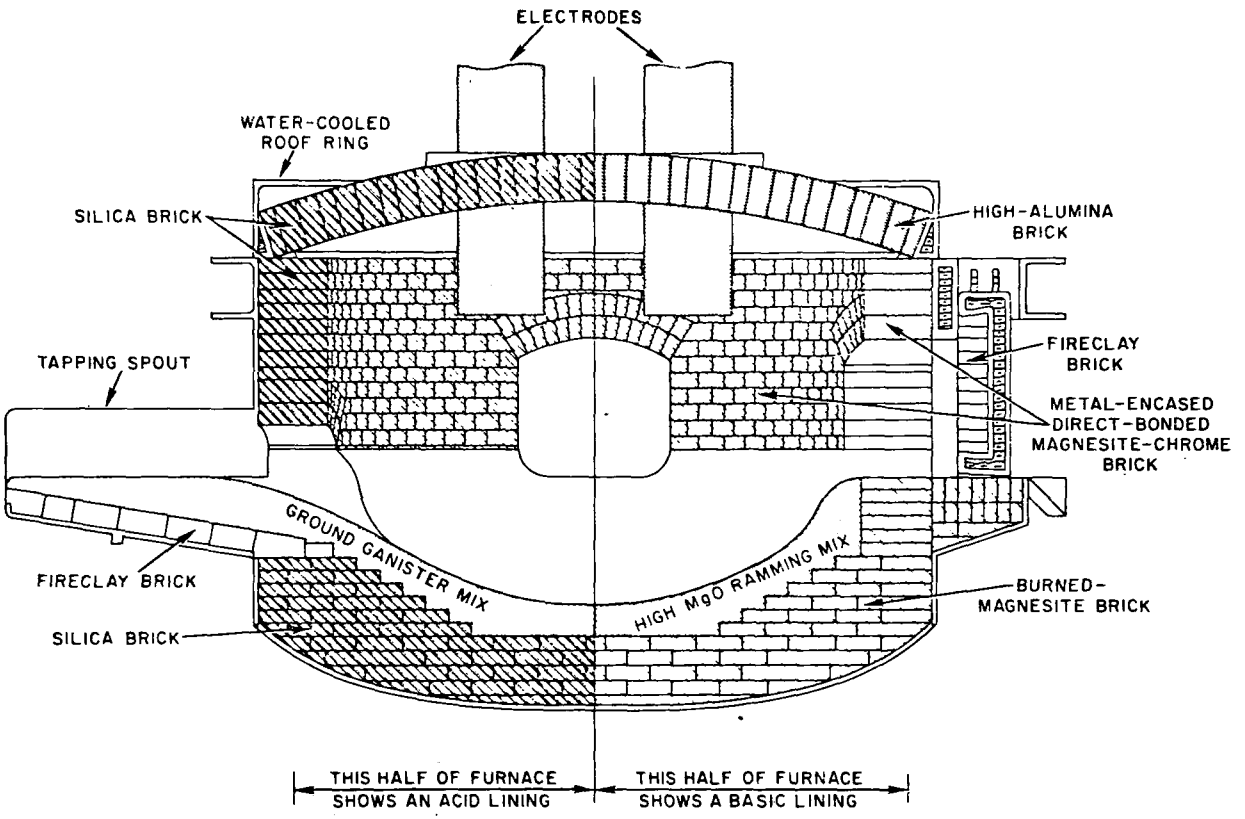

Figure 2. Cross-sectional view of a steelmaking electric-arc furnace indicating typical refractories employed in (left) an acid lining and (right) a basic lining.

that the electrodes are raised to clear the furnace shell prior to removal of the roof. All modern furnace roofs are the swing type although many older gantry type furnaces are still in operation.[1,2,3,4,7]

Openings are provided in the side of the furnace shell structure for both the tap hole and the rear slagging-working door. Sometimes a side door is included as an aid during refining and fettling operations. Covered ports are sometimes provided to facilitate fettling and oxygen lancing. Ports can also be provided for lime and carbon injection lances. All furnace shell openings are water cooled.[1,4]

The furnace structure is mounted on curved toothed rockers and rails which permit forward and backward tilting of the furnace. Tilting is accomplished by a dual rack and pinion mechanism which is attached to the rockers. Most modern furnaces are designed to tilt 15° backward for deslagging and at least 45° forward for tapping. Figure 3 presents both overhead and vertical diagrams of a steel making arc furnaces.[1,4,7,9]

OPERATING PRACTICES

Charging

As mentioned in the previous section, basic-lined steelmaking arc furnaces generally melt scrap made up of a combination of alloy and plain carbon steel. The percentages of each of these two types of steel in a furnace charge is dependent upon the particular grade of steel being produced. Acid-lined electric-arc furnaces producing steel castings must use scrap which has a low sulfur and phosphorous content.[1,4]

The necessity for conserving the valuable alloy content of steel scrap, to economize in the use of virgin alloys and to insure that only the elements desired be introduced into the steel requires that scrap used in basic lined furnaces be segregated into stock piles of identified grades. The more the grades of steel produced by a furnace vary, the more

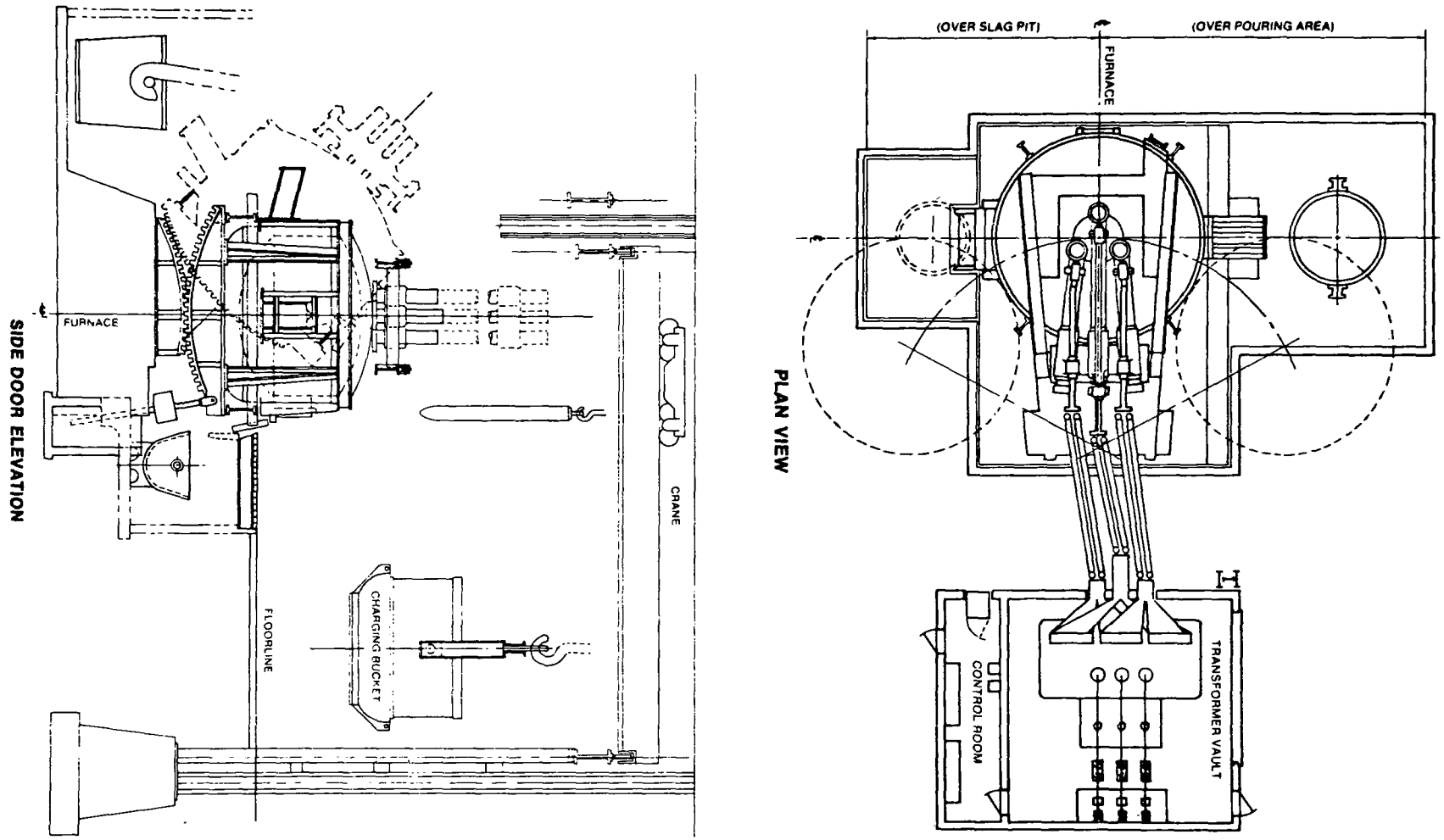

Figure 3. Overhead and vertical schematic diagrams of a steelmaking electric-arc furnace.[1]

extensive this scrap classification by alloy content must be. Classification by scrap thickness and cleanliness is also employed.[1,4]

Prior to charging, the furnace power is turned off and the roof and electrodes are moved out of the way. Top charged arc furnaces are charged by bucket. A bottom dump bucket charges scrap from a considerable height resulting in a shock to the furnace bottom. Scrap size and bulk density may vary from heavy scrap such as ingots to light scrap such as machine shop turnings. The charging bucket is normally loaded with a layer of light and medium scrap on the bottom. This is done for two reasons: (1) to provide some cushioning of the fall of the larger pieces of scrap, (2) because this type of scrap melts more quickly than large pieces of scrap, thus forming a pool of molten metal upon the furnace bottom. However, extremely large pieces of scrap such as ingot butts and broken roll sections are preferably charged by magnets onto the bottom of the furnace prior to bucket charging. Heavy scrap is charged in the area within or adjacent to the triangle formed by the electrodes. This heavy scrap must be charged in such a way that it will not shift during melt-down and cause possible damage to electrodes by falling against them. After this, light or medium scrap is usually piled high around the sides of the furnace to protect the roof and side walls from the high-power arc during the melt-down. Alloying materials that are not easily oxidized and limestone may be charged into the furnace along with the scrap prior to melt-down. Limestone is used as a slagging agent to reduce the sulfur and phosphorous content in the steel and is often charged with the scrap prior to melt-down or during back-charging. Iron ore and coke may also be charged depending on the carbon content of the scrap and the product requirements.[1,4,6,7,8,9,10]

Meltdown/Oxidation

Once the furnace has been initially charged, the banks in front of the furnace doors are built up with refractory material to form a dam in order to keep molten metal from slopping out of the furnace. Once the doors and roof are securely closed, the electrodes are lowered to about an inch above

the scrap. For the first three to five minutes, an intermediate voltage is selected to allow the electrodes to bore into the scrap, thereby shielding the lining and roof of the furnace from the heat of the arc. After this initial period, maximum voltage is usually applied in order to melt the scrap as fast as possible. The electrodes melt the portion of the charge directly underneath and around them and continue to bore through the metallic charge forming a pool of molten metal on the furnace hearth which in turn helps melt the charge via radiational heat. Since the bulk density of an unmelted scrap charge is considerably lower than the density of molten steel, the space occupied by unmelted scrap is relatively high in comparison to the space it occupies once it is melted. Because of these spatial characteristics, electric arc furnaces are usually backcharged once or twice after the initial charging. Sometimes unmelted scrap hangs up on the refractory internal walls of the furnace. When this happens, the furnace is tilted in order to get this unmelted metal to slide into the center of the furnace.[1,4,7]

During the formation of molten metal, phosphorous, silicon, maganese, carbon; etc., present in the scrap are oxidized. The oxygen responsible for this oxidation is primarily obtained from (1) oxygen in the furnace atmosphere, (2) oxides of alloying elements present in the scrap, (3) calcination of limestone (if used), and (4) oxygen that is lanced into the bath. Oxygen lancing is usually employed to reduce the carbon content of the steel by reacting with it to form carbon monoxide. Oxidation practices must be varied with different grades of carbon steel.[1]

Refining

The Basic Electric-Arc Furnace Process - In the basic process, the refining period begins after the metal is completely molten, oxygen lancing has been completed and the desired carbon content level has been achieved. Basic-lined electric furnaces may employ either a single or double slagging process during refining. The single slag process is generally used to produce specialty steels having various alloy contents. Product quality (chemical

and mechanical properties) is better with the double slag process than with the single slag process.[1]

In the single slag process, the oxidizing slag which initially forms is made reducing by adding coke breeze or old electrodes during the refining period. This carbon reacts with calcium in the slag to form calcuim carbide which makes the slag basic. Calcium in the slag may be obtained from either lime or limestone. As mentioned previously, these materials are usually charged into the furnace with the scrap and, if needed, further additions may be made to the furnace during the refining period. Additions of fluorspar and silica sand which thins the slag may also be made as needed during the refining period, and lime and carbon additions may either be blown in through injection lance ports on the furnace shell or made through the furnace door. Fluorspar, silica sand and ferrosilicon additions are conventionally made through the side door of the furnace.[1,4,5,6,8,11]

In the basic double slag process, the oxidizing slag which initially forms is removed and followed by a reducing slag. Oxidizing slag removal is accomplished by cutting off the electric power to the electrodes, back-tilting the furnace slightly and then raking the slag out through the slagging door with wooden or steel rabbles. After the initial oxidizing slag has been removed, the furnace is returned to its normal position, the electrodes are lowered and a second or reducing slag is formed by adding burnt lime, powdered coke, fluorspar, silica sand, ferrosilicon and ferromanganese. When low-carbon grades (> 0.12 percent C) of steel are being produced, a lime silica, a lime alumina or a modified carbidic slag containing less coke than normal, is used.[1,8,10,11]

A carbide slag acts to return reducible oxides such as those of manganese, chromium, vanadium, tungsten, iron, etc. from the slag to the metal; consequently, such oxides may be added for direct reduction as soon as the carbide slag is formed. The slag also serves to reduce the oxides in the bath and facilitates the removal of sulfur as calcium sulfide.

Desulfurization is aided by the addition of lime, limestone and fluorspar, by agitation of the bath and high temperature. Once the desired carbon and alloy contents have been achieved, the furnace is tapped shortly thereafter.[1,5,7]

The Acid Electric-Arc Furnace Process - Most American steel foundries using the acid process employ the single slag complete oxidation method of refining. The refining period begins as soon as the charge is completely melted or nearly all melted. Iron ore and silica sand are added to the bath at this time. The iron oxide and silicon oxide resulting from the additions of these materials serve to form an oxidizing slag. If a high percentage of returned foundry scrap has been melted in the furnace, the silicon and manganese in the scrap will become slag forming oxides, thereby reducing the silica sand additions required during the refining period. The carbon content of the molten bath should be higher than the carbon desired in the finished steel. The excess carbon will be removed by the boil.[1,11]

After the bath is covered with an oxidizing slag which is black in color (indicates a high iron oxide content) and the carbon content in the molten bath is high enough, the temperature of the steel is increased until it is hot enough to boil. The boil is a reaction between the carbon and the oxygen dissolved in the steel. This decarburization process is sometimes accelerated by injecting oxygen gas into the bath. The boil is usually maintained for at least ten minutes. After the boil, silicon and manganese are added as ferroalloys for deoxidation. The heat is tapped as soon as these materials have completely melted and diffused through the bath.[1]

At regular intervals during the refining period of both the acid and basic processes, the temperature and composition of the melt are monitored. This is usually done by opening the slagging door, taking a thermocouple temperature reading and withdrawing a sample of the molten steel. Once the sample has cooled, the carbon content and sometimes the content of certain alloys are measured.[4]

Tapping

In tapping a heat, the electrodes are raised sufficiently to clear the bath after the power is shut off. The tap hole is opened and the furnace is tilted so that the steel heat is drained from the furnace into a teeming ladle used to hold the molten steel. This steel holding ladle is usually held close to the furnace spout by a teeming crane during tapping to minimize exposure of the molten steel to air and to minimize the erosion of the ladle refractories. The slag may be tapped before, with or after the steel, depending on the particular operation. The slag serves as an insulating blanket during teeming. Additions of feromanganese and ferrosilicon may be made in the ladle in order to tie up oxygen. If the final product requirements call for them, alloys such as aluminum, titanium, zirconium, vanadium and boron may also be added in the ladle. The common practice is to add these alloys in paper sacks which are thrown into the ladle as the steel is being tapped so that the sacks hit the molten metal stream. If a chrome alloy steel is being produced, chromium additions are usually made just prior to tapping in order to minimize the formation of chromium oxide. Copper, nickel and molybdenum alloys can be added at any time without loss due to oxidation or adsorption by the slag.[1,3,4,11]

Pouring

In the basic steel-making process, once the steel holding ladle is full, it is transported by crane or ladle transfer car to either a teeming or a continuous casting area. At this time, either of two pouring practices may be employed, direct (top pouring) or indirect (bottom pouring). Direct pouring is accomplished by raising the stopper rod, thus allowing the molten steel to run directly from the ladle. In the indirect method, the molten steel runs from the bottom of the ladle through a refractory funnel and runner. Basket pouring, a modification of indirect pouring, utilizes a small intermediate ladle which is filled from the bottom of the large ladle. When the small ladle is filled, the nozzle in its bottom is opened, allowing the molten steel to be poured. Basket pouring results in more

uniform steel pouring rates. The purpose of indirect pouring is to reduce splash, thereby minimizing scabs and defects on the surface of the steel products.[1,3]

The teeming section of a mill building consists of a long aisle where strings of flat bed railroad cars called "drags" are stationed. A number of cast iron ingot molds seated on flat cast iron plates called "stools" are located on the bed of each car. The teeming crane holds the ladle over each ingot mold. The molten steel is poured through a bottom ladle nozzle into the ingot molds. When one mold is filled, the stopper rod which blocks the ladle nozzle is closed and the teeming crane shifts the ladle to the next ingot mold. This procedure continues until all the steel in the ladle has been poured. At this time, any slag remaining in the ladle is dumped and, if required, the ladle is returned for another heat of steel. During the teeming operation, some materials are added to the steel such as aluminum or lead shot. The aluminum acts as a deoxidizing agent whereas lead is added to make the steel more freely machinable.[1,3,9,10]

Steel that is not teemed into ingot molds can be cast in a process known as continuous casting. In this process, billets, blooms, slabs and other shapes are cast directly from the teeming ladle. To accomplish this, the steel ladle is suspended above a refractory-lined rectangualar container with several nozzles in the bottom. This "tundish" regulates the flow of molten steel from teeming ladle to the continuous casting molds. When casting billets or blooms, several parallel casting molds are served by one "tundish".[1,3]

In the acid steelmaking process, molds can be poured either directly or indirectly, depending on the size of the castings being produced.[1]

Vacuum Degassing

Vacuum degassing is defined as, "the exposure of molten steel to a low-pressure environment to remove gases (chiefly hydrogen and oxygen) from

the steel. Gases, especially hydrogen and oxygen, which have been absorbed into molten steel can cause voids, inclusions, and other flows which contribute harmful properties to the solidified steel. These gases are sometimes removed using vacuum degassing. If vacuum degassing is used it can be done at various points following furnace tapping.

Since most vacuum degassing is performed separate of the electric-arc furnace operation, it is not covered by the NSPS. However, vacuum degassing is a source of particulate emissions and should be considered by the inspector and operator so that those emissions do not interfere with the measurement of emissions from the operation of the arc-furnace.

One method of vacuum degassing coincides with furnace tapping, called "tap degassing", and as such, emissions during this process are covered by the NSPS concerning tapping. Tap degassing is performed by tapping the furnace directly into a tundish which is mounted upon a covered steel ladle where the degassing is performed. Emissions caused during the tapping of the molten metal into the tundish should be considered tapping emissions at this point. Emissions from the degassing should not be considered by the field inspector.

POLLUTANT EMISSIONS

The chemical compositions and size distributions of particulate emissions that were generated by various steelmaking electric-arc furnaces are presented in Tables 1 and 2 respectively. As one might expect, iron oxide is the primary constituent in the dust. Oxides of fluxes, deoxidizing agents and alloys occur in the furnace dust at various concentrations, depending on the composition of the scrap, the types of fluxes and alloys used and the steelmaking techniques employed. Table 3 shows the composition of a typical arc-furnace dust during the various stages of a heat. As can be seen from this table, iron oxide fume is the major dust constituent during the meltdown/oxidation cycle and during oxygen lancing while calcium oxide from the slag is the major dust constituent during refining. As was the

Table 1. CHEMICAL COMPOSITION OF STEELMAKING ELECTRIC-ARC FURNACE DUST[6,15]

Constituents	Range of dust composition, % (wt)
FeO	4 - 10
Fe_2O_3	19 - 53
Cr_2O_3	0 - 14
MnO	0.6 - 12
NiO	0 - 3
PbO	0 4
ZnO	0 - 44
SiO	0.9 - 9
Al_2O_3	1 - 13
CaO	3 - 15
MgO	2 - 15

Table 2. SIZE DISTRIBUTION OF PARTICULATE EMISSIONS FROM STEELMAKING ELECTRIC-ARC FURNACES[6]

Particle size range, microns	Size distribution range, % (wt)
0 - 5	57 - 72
5 - 10	8 - 38
10 - 20	3 - 8
20 - 40	2 - 15
40	0 - 18

Table 3. CHANGES IN COMPOSITION OF ELECTRIC FURNACE DUST DURING A SINGLE HEAT[6,12]

Constituent	Composition, % (wt)			
	Meltdown	Oxidation	Oxygen lancing	Refining
Fe_2O_3	56.75	66.00	65.37	26.60
Cr_2O_3	1.32	1.32	0.86	0.53
MnO	10.15	5.81	9.17	6.70
SiO_2	9.77	0.76	2.42	trace
CaO	3.39	6.30	3.10	35.22
MgO	0.46	0.67	1.83	2.72
Al_2O_3	0.31	0.17	0.14	0.45
P_2O_5	0.60	0.59	0.76	0.55
SO_2	2.08	6.00	1.84	7.55

case previously, these compositions will vary depending on the input materials and steelmaking practices employed.

Some elements are quite volatile under steelmaking conditions. Cadmium and zinc are volatile so that the oxides of these elements are deposited in the fume collection system. Calcium and magnesium are also very volatile but the chemical reactions involving them are such that these elements remain in the slag as oxides. Lead is also quite volatile however, a bath containing considerable nickel may retain some lead. Copper, nickel, manganese and chromium are moderately volatile and these metals may be vaporized from the surface of an iron melt that is exposed to a vacuum such as that created by a fourth hole ventilation system.[11]

The emissions resulting from charging a hot electric-arc furnace with scrap are usually heavy and difficult to capture. The intensity of charging emissions is a function of scrap cleanliness. Scrap containing heavy rust, oil, grease or dirt is highly emissive during charging. Wet or icy scrap may also cause heavy emissions. Emissions during charging are highly carbonaceous being composed primarily of smoke and soot.

Highest furnace emissions occur during the meltdown/oxidation period. These emissions are primarily composed of iron and other metallic fume. The fume emission during meltdown is highly dependent upon the intensity of the arc and the thickness of the scrap. Thin scrap will generate more fume during meltdown than thick scrap. Fume generation is greatly accelerated during periods of oxygen lancing. Fume emissions during the refining period are moderate with periods of maximum emissions taking place when the bath is agitated during additions to the melt or at any time when working doors or sampling doors are opened, creating an induced draft through the furnace. Fume emissions during tapping, like charging emissions, are difficult to capture. They are primarily composed of metallic oxides resulting from contact with the air and from bath agitation.[2,3,6]

VENTILATION PRACTICES

There are several types of fume collection devices which can be used on electric-arc furnace off-gases. Meeting NSPS will require the use of such a device for the furnace, and one to vent the shop, in which case a combination of fume collection devices may be utilized. There are several types of fume collection devices currently in use, however, we will only describe those which are currently being designed for new furnaces. For more information on evacuation systems refer to reference 2.

Fourth Hole

The fourth hole evacuation consists of ducting attached to a separate or fourth hole in the roof of the furnace, from which the shell is directly evacuated, see Figure 4. A negative pressure must be maintained within the furnace shell indicating that the evacuation system is in fact evacuating the shell. The gases are cooled and the CO combusted in water cooled elbows. The fourth hole system has potentially the lowest air volume requirements of any fume collection systems.

The fourth hole system only collects fume while the roof is in place and does not collect fume during charging and tapping. Since charging and tapping emissions are not captured, emissions from the shop may be excessive if some system is not used to capture these shop emissions. Fume collection efficiency is also impaired by the opening of any furnace doors beyond the openings for which the system was designed.

Side Draft

Side draft hoods are designed to capture the furnace off-gases after they leave the furnace around the electrode holes and the work doors, as shown in Figure 4.[12] The pressure inside the furnace shell does not require monitoring, and open doors do not substantially affet the fume capture collection efficiency. The gases are cooled by the use of bleed-in air.

Side draft capture systems only operate while the furnace roof is in place, therefore they do not capture charging and tapping emissions. Due to high operating costs side draft evacuation is only used for small furnaces (< 25 ton). Advantages include elimination of explosion potential and no requirement for close control over internal vacuum.

Combination Hood

This hooding arrangement, illustrated in Figure 4 incorporates elements of side draft and fourth hole ventilation systems. The fume is collected from a fourth hole as well as from around the electrodes, and there is an air gap in the ducting to introduce secondary combustion air for oxidation of CO to CO_2. This system uses the least air volume next to the fourth hole system but requires a very accurate control system to regulate internal furnace pressure plus draft at the electrodes.[12] The combination hood also only operates when the furnace roof is in place, thus it does not capture charging and tapping emissions.

Canopy Hood

The canopy hood shown in Figure 4[12] is the least efficient method of arc furnace fume capture. The canopy hood does not capture the quantity of fume which the other systems capture and must use far greater air volumes. The main advantage of this arrangement is that it captures emissions during charging and tapping. For this reason, many new electric-arc furnaces will incorporate canopy hooding with one of the other three systems previously described.

A combined system should operate as follows. In a single or multi-furnace shop, when the roof is removed from a furnace, the furnace ventilation air should be dampered off. At the same time, the canopy hood should begin to operate to capture the fumes escaping the open furnace. It is important that the FEO verifies that the system is operating properly since any use of the furnace evacuation system when the roof is not in place, or of the canopy hood while the roof is in place constitutes the addition of

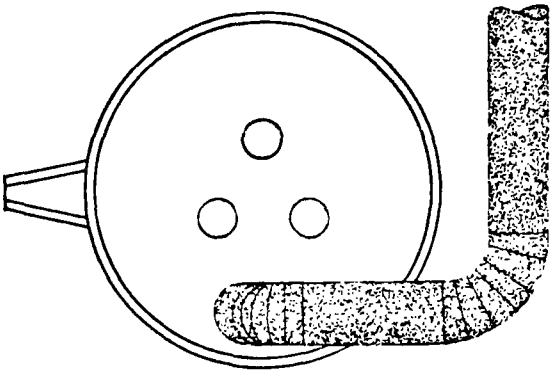

Fourth hole

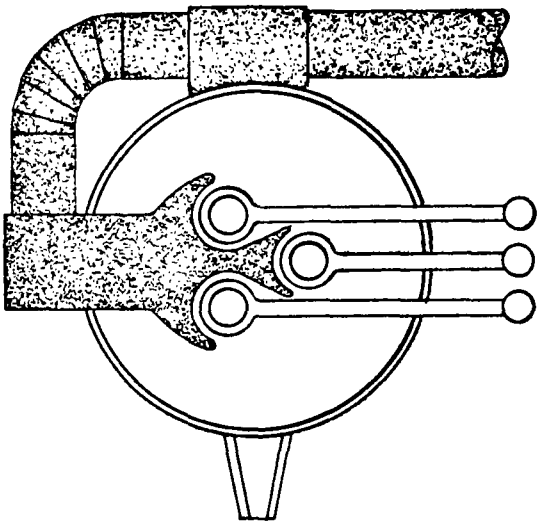

Side draft

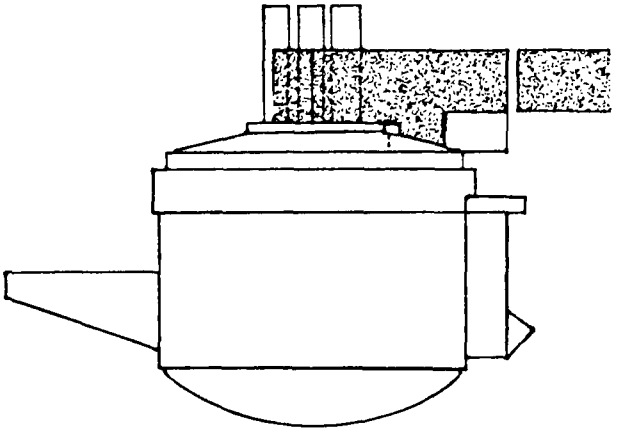

Combination hood

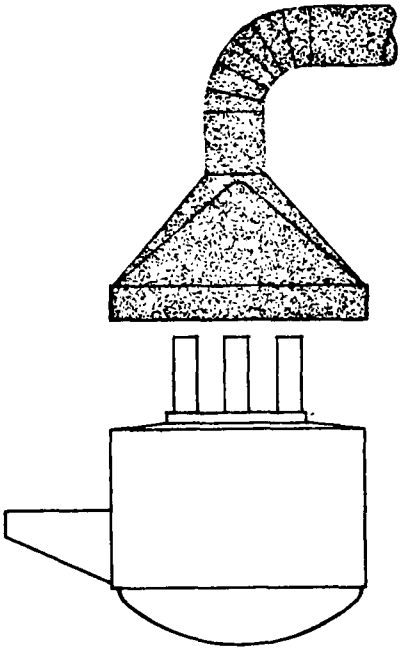

Canopy hood

Figure 4. Ventilation systems for electric arc furnaces

essentially clean dilution air. Since the emission standard is strictly a concentration limit, the additional dilution air would obviously yield a false low concentration measurement.

Building Evacuation

It is possible to have a fume collection system consisting of scavenging duct work in the peaks of the building roof which collects air from the entire shop building.[4] This type of system requires huge volumes of ventilation air, however it does not allow any shop emissions to escape without being cleaned. This type of system could be used in combination with furnace capture systems, however, it is unlikely to fine widespread use in new facilities. The FEO may encounter this type of system in a shop which has increased capacity by upgrading existing units or by the addition of new units. A building evacuation system will be necessary to meet the standards in certain shops that produce alloy steels without the use of furnace evacuation systems.

EMISSION CONTROL SYSTEMS

Particulate emissions from the operation of electric-arc furnaces may be controlled by fabric filtration (baghouse), wet scrubbing, or electrostatic precipitation. However, to meet the New Source Performance Standards, fabric filtration is the most likely candidate. The required efficiency and opacity regulations make fabric filtration the best available control technology for meeting these regulations.[13] For these reasons, more emphasis will be placed upon control utilizing fabric filtration, than the other two possible alternatives. The NSPS do not specifically require that fabric filtration be utilized however, therefore the use of scrubbers and electrostatic precipitators is not precluded.

Fabric Filtration

Fabric filter collectors suitable for use on arc furnace dust may be classified by their cleaning mechanism or cycle, and by whether they are operated under pressure or suction. Each distinction is important to emissions and emissions testing, therefore the field inspection officer (FEO) should be aware of the type of system he is inspecting.

Pressure and Suction Systems - Pressure systems are those in which the effluent gases are forced through the bags by a fan placed between the fume collection duct or inlet to the baghouse and the baghouse itself. In this type of system, the compartment housing the bags need not be airtight, since only the dirty air side of the collector needs to be sealed. The pressure system can be easily inspected while in operation since air entering the bag compartment has no effect on the furnace, fan, or fabric filter collector performance.[12] Another, and perhaps the most important aspect of pressure systems from the FEO's viewpoint, is that pressure systems do not require and almost never have a stack. Pressure systems normally vent electric-arc furnace effluent through louvered openings or monitors near the top of each compartment where full advantage of the height of the fabric filter itself is utilized to disperse the gases.

It would be extremely difficult to properly sample a pressurized fabric filter for particulate if it did not have a common stack to vent the compartments of the baghouse. Secondly it would also be difficult to monitor the opacity of the multiple vents from which a pressurized fabric filter exhausts effluent gases. More details concerning testing and monitoring this type of system are given in reference 13.

The alternative to the pressure system is the exhaust system or suction type collectors. The fan is placed on the clean air side of the baghouse and it sucks the air through the bags. With this system it is necessary to make the bag compartments airtight, especially during the cleaning cycle.

Maintenance is difficult since the bags may not be inspected while they are in use without affecting fan and furnace performance.[12]

Suction or exhaust system fabric filters are normally vented to the atmosphere through a common stack which is easily sampled for particulate and monitored for opacity. The FEO should have no problems in determining if this type of system is performing satisfactorily to meet the NSPS.

Intermittent or Continuous Automatic Cleaning Baghouses - Another important feature or fabric filter collectors which is of concern to the FEO is the method of cleaning. Fabric filter collectors all operate by filtering dirty gases through fabrics and may be broken into two broad categories by cleaning method. Fabric filter collectors become clogged with the particulate matter which they capture, and must be cleaned if they are to be of further use. Systems designed to run without being cleaned until they are taken off-line or shut down are intermittent. Those systems which can be operated and cleaned without interruption of the overall filtering process are considered continuous automatic.[14]

Intermittent systems can be used for applications in which the fabric filter is subjected to low particulate loadings and short time durations, since they cannot be cleaned while in use. Intermittent systems must be cleaned by mechanical shaking, since there is no provision for cleaning dirty reverse air. This type of system may be utilized on an EAF, especially in a single furnace shop. In a single furnace shop utilizing an evacuation system which only operates while the roof is in place, the bags could be cleaned during the charge or back charge, when the roof is removed and the evacuation system is inoperative. For this type of system the FEO should carefully note the pressure drop across the baghouse when it is first brought back on line after a cleaning cycle, since this will be an important factor in determining the efficiency at which the baghouse will operate. It will also be important to coordinate the sampling time with the times that the baghouse is operating, since it will be necessary to stop sampling during the cleaning cycle.

Continuous automatic cleaning baghouses are more complex than intermittent systems, however they are more flexible in that they may be operated continuously without interruption for necessary cleaning. These systems will likely be found in multiple furnace shops which duct the effluent gases from all the furnaces to a single fabric filter collector. In this situation, there would be no time at which the baghouse could be shut down for cleaning since the furnaces would be charged at different times, which would require that the fume collection system is never inoperative. With a continuous automatic fabric filter collector, it is necessary for the FEO to note the type of cleaning mechanism, and the time cycle and duration of the cleaning mode.

Cleaning Mechanisms - There are three major types of cleaning mechanisms for fabric filters and they are: (1) shaker, (2) reverse flow, and (3) reverse pluse. The shaker type cleaning mechanism disloges the particulate matter from the bag filter by shaking the bag from an oscillating top supporting mechanism which is driven by a motor. The important parameters which determine the cleaning efficiency with this type of system are: the duration of the shaking cycle, the amplitude of the shaker, and the number of shakes per unit time. The interrelationship between these parameters and fabric filter performance is quite complex however, and is beyond the scope of this manual. It is sufficient that the FEO realize that any change in these cleaning parameters may affect the performance of the fabric filter collector. The same is true for any of the cleaning mechanisms mentioned in this manual, though the important parameters may not be the same. To utilize a shaker cleaning mechanism on a continuous automatic unit, the compartment being cleaned is isolated on a timed basis, allowing no air to flow through while shaking.

Reverse flow type cleaning can be utilized by continuous automatic systems and consists of isolating the compartment to be cleaned using dampers, and forcing air through the bags (using an auxilliary fan) in the opposite direction which collapses the bag, dislodging the filter cake.

This sequence may be repeated several times during the cleaning cycle. The most important parameters in this type of cleaning are the number of collapse/reinflation cycles, and the amount of reverse air utilized.

Reverse pulse type cleaning consists of a short pulse of compressed air directed through a venturi from the top to the bottom of the bag. The dirty air is filtered from the outside to the inside of the bag, building up a dust layer on the outside of the bag. The burst of compressed air violently expands the bag disloging the dust layer and cleaning the bag. No sectionalization is required since the pulse of air effectively stops the flow of air through the bag during cleaning. The most important parameters with reverse pulse cleaning are the duration and pressure of the pulse and the number of pulses per cleaning cycle, although normally only one pulse is used.

Wet Scrubbers

Wet scrubbers may be utlized to remove particulate matter from electric-arc furnace off-gases.[2,3,4] In order to meet NSPS it would be necessary to utilize a high energy (pressure drop greater than 60 inches w.g.) venturi type scrubber.[13] However, Section 60.275 (e) of the regulation allows a scrubber operating with a fourth hole evacuation system to exceed 0.0052 gr/standard cubic foot if the furnace also has a canopy hood vented to a baghouse which achieves less than that level. Scrubbers operate by mixing the gas stream with a liquid medium (water) used to collect the particulate, and followed by collection of the liquid droplets with inertial entrapment. The gases must be conditioned before entering the scrubber and this is usually accomplished by quenching the gases to their saturation temperature in the spark box.[14] It will be necessary therefore for the FEO to note the water injection rate at the spark box, and the temperature of the exiting gases (entering the scrubber).

Because of the scrubber's very high energy requirement per unit volume of gases handled, it is very important to minimize the gas volume being treated to make their use practicable. Therefore scrubbers will normally only be found on furnaces equipped with direct shell evacuation such as a

fourth hole, or combination roof fume capture systems. Also since the particulate collected by scrubbers is in the form of a sludge or slurry, there should be no opacity problem with the dust handling system. The most important parameters for the FEO to observe are the scrubber's water utilization rate, both recirculation and make-up, and the pressure drop across the scrubber. These parameters are directly related to the performance of the scrubber.

Electrostatic Precipitators

Electrostatic percipitators may be used to remove particulate matter from electric arc furnace off-gases. Electrostatic precipitators operate by charging the particulate matter electrically and collecting the charged particles upon oppositely charged plates by coulombic attraction forces. The plates which collect the particles are periodically cleaned by mechanically shaking loose these deposits with hammers called rappers.

For electrostatic percipitators to perform satisfactorily, the current and voltage must be controlled to within specified limits determined by the overall design of the unit as well as the charactistics of the particles and gas stream. Also, the resistivity of the particles must be maintained within certain limits for them to properly accept a charge and dissipate the charge upon collection. To properly condition the gases and particulate matter it is necessary to quench the off-gases in a wet spark box to the appropriate temperature and humidity.[2,3,14] The FEO should note the water injection rate in the spark box as well as the temperature of the exiting gases (the gases entering the precipitator).

The frequency and rate of cleaning the collection plates should also be noted by the FEO. It is also possible that a wet electrostatic precipitator could be used in which case the collection plates are continuously washed with water. In this less likely case, the amount of water used to clean the collection plates should be noted.

REFERENCES

1. The Making, Shaping and Treating of Steel. United States Steel. December 1970.

2. Background Information for Standards of Performance. Electric-Arc Furnaces in the Steel Industry. EPA-450/2-74-017a. October 1974.

3. Development Document for Effluent Limitations Guidelines and New Source Performance Standards for the Steel Making Segment of the Iron and Steel Manufacturing Point Source Category. EPA-440/1-74-024-a.

4. Site Visitation. Bethlehem Steel Corporation. Steelton Electric Furnace Shop. Steelton, Pa. April 1976.

5. Personal Communication, Harold E. McGannon. U.S. Steel. Pittsburg, Pa. July 1976.

6. A Systems Analysis Study of the Integrated Iron and Steel Industry. Batelle Memorial Institute. Columbus, Ohio. May 1969.

7. Site Visitation. Marathon LeTourneau Electric Furnace Shop. Longview, Texas. June 1976.

8. Nafziger, R.H., J.E. Tress and W. L. Hunter. Rapid Addition of Charge Materials in Continuous Electric Furnace Steelmaking. Iron and Steelmaker May 1975.

9. Pongia, Vincent J. Start-up of 150-ton Electric-Arc Furnace at Lukens Iron and Steel Engineer. December 1975.

10. Hayes - Albion's Electric Foundry J. C. Tuohy. Iron and Steelmaker. May 1975.

11. J.F. Elliot, The Chemistry of Electric Furnace Steelmaking. Iron and Steelmaker. January 1975.

12. Technical Bulliten, Carborundum Corp, "Electric-Arc Furnace Dust and Fume Control."

13. Federal Register. 40(185). Electric Arc Funaces in the Steel Industry - Standards of Performace.

14. Basic Handbook of Air Pollution Control Equipment, Prepared by Western Precipitation Division. Joy Manufactoring Co.

SECTION IV

INSPECTION PROCEDURES[1,2]

An air pollution inspection involves the visiting of an EAF to determine if the equipment and process meet the NSPS. The Field Enforcement Officer (FEO) must observe, qualitatively, the operation and condition of the EAF, fume capturing system and control device. The condition as well as the type of equipment and general housekeeping practices all could influence the emission rate, and should be noted for future reference. The determination of whether the EAF is in compliance with NSPS, does not directly require the general observations just mentioned, however, it is suggested that they be made to aid future decisions concerning the frequency of future testing.

Plant inspections are an important part of field operation activities which aid in the systematic detection and observation of emission sources. The following will outline the overall inspection process, however much of this process does not apply specifically to the initial determination of compliance with NSPS. The main point of interest will be: (1) the formal procedure, and (2) the safety precautions. The frequency of inspection and overall inspection are more specific to the continuous monitoring activity of perhaps a local agency. The whole process of inspection follows certain rules and guidelines which are discussed briefly in the following sections.

CONDUCT OF INSPECTION

There are four important components in the conduct of inspection of a given equipment or a process.

- Formal procedure (e.g., use of credentials, ask to see appropriate official)
- Frequency of inspection
- Overall inspection process (e.g., review of process and records)
- Safety precautions and procedures

Formal Procedure

Prior to the actual on site inspection, the FEO should investigate any available data on plant operations. In preparation for the inspection the official should obtain the following data:

- Information for each major source (from an air pollution point of view) including process descriptions, flow diagrams, estimates of emissions, applicability of standards, and previous related enforcement actions.
- Plot plans showing disposition of all major units at the facility.
- Business and ownership data including names of responsible management personnel.

At the time of inspection, the FEO must have with him the credentials showing his identity as an official of the air pollution control agency. He should arrange an interview with the management of the shop. The interview with plant managers and equipment operators can verify data gathered and clarify any misunderstanding with regard to the information reviewed prior to the inspection.

Frequency of Inspections

The EAF and related equipment should be inspected systematically and regularly. The frequency of reinspection is based upon the findings during the initial inspection and the recommendations of the FEO and his supervisor. These recommendations obviously depend on whether or not the "good" maintenance practices from the pollution standpoint are followed by the operator. Further, the frequency would depend on the overall inspection load of the control agency for the whole district. The reinspections are scheduled so that they can be completed within a month. The number of reinspections assigned per district is based on the estimate that all required inspections can be completed within 1 year.

The enforcement officer may have occasion to inspect the process out of schedule because of complaints or violations. In these cases, he does not make a formal inventory reinspection, but uses the copy of the previous inventory record (equipment list) from his files as a check on status of the permit, compliance, or other situation.

Overall Inspection Process

Some inspections, especially initial ones, are comprehensive, designed to gather information on all equipment and processes of the plant. Others are conducted for specific purposes such as:

- Obtaining information relating to violations
- Gathering evidence relating to violations
- Checking permit or compliance plan status of equipment
- Investigating complaints
- Following up on a previous inspection
- Obtaining emissions information by source testing

The initial inspection has two phases: a plant survey and a physical inspection of the equipment and processes. After this inspection is complete, routine surveillance continues. Periodic reinspections are scheduled and ocasional special purpose inspections (unscheduled) may be required.

During the initial survey, the inspector examines the possible effects of emissions on property, persons and vegetation adjacent to the source; he may also collect samples or specimens that exhibit possible pollution related damage. Sensory observations (odor detection) are also made.

An aid to the FEO is the information incorporated in applications to operate the equipment. The permit status of the equipment should be routinely checked to detect any changes in equipment or process that might invalidate an existing permit or conflict with variance conditons. Similarly, alteration of equipment is frequently detected by discrepancies in the equipment description or by changes noted on engineering applications in the permit file.

Safety Equipment and Procedures

Most steel plants have standard safety procedures for employees and vistors. These procedures also concern the FEO. The FEO is accompanied to the unit or units to be inspected by the air pollution representative within the plant or by such other informed plant personnel as he might indicate.

Personnel protection is necessary in many of the industrial locations that an enforcement officer may be required to visit. The FEO should wear a hard hat, safety glasses and flame retardant clothing while in the plant. The FEO should be accompanied by another person and two persons should remain together until the job is completed. Specific safety related rules and precautions should be determined by the FEO before entering proceeding or with any part of the inspection.

OPERATING PARAMETERS TO BE CHECKED

The inspector should check specific operating parameters of the control system, looking at both the system itself, and the operating and maintenance records kept by the plant. A summary of what to look for is given below, to supplement the inspection checklists presented in the next section. More detailed information can be obtained from reference 3, a handbook for operation and maintenance of control equipment.

Fabric Filter Collectors

A properly installed and operated baghouse requires a minimum of routine maintenance based on recommendations furnished by the baghouse manufacturer supplemented by operating experience. Visible emissions are indicative of a faulty bag. Continuous, automatic monitoring and recording of opacity will be required of new sources, but is not currently performed at most plants. Faulty or leaking bags are also indicated by dust on the floor of the clean side of the filter house; patches on the individual filter bags are acceptable provided the hole is completely covered. The inspector should verify that an inventory of parts which are susceptible to failure are kept on hand, particularly replacement bags.

Fans and blowers tend to be a problem area and periodic maintenance should be scheduled to avoid equipment failure. Vibration noise probably indicates an out-of-balance rotor and/or bad bearings, and is a precursor to an equipment failure.

Hoods and collection points should be checked for ill-advised changes such as holes cut in hoods, additional hoods added, ducts blocked off or intakes moved away from the dust source.

Manometer records of the pressure drop across the fabric filter are especially revealing of baghouse performance, although continuous records are

not typically kept on file. A high pressure drop indicates an increase in flow, blinding of the filter, overfilled hoppers, and/or an inoperative cleaning mechanism. A low pressure drop suggests fan problems, broken or unclamped bags, plugged inlet ducting or clogged valves, or leakage between sections of the baghouse.

Wet Scrubbers

Malfunction of wet scrubbers rarely occurs in the scrubber itself since most scrubbers have few or no moving parts, but the system as a whole must be investigated regularly by the plant. The following points should be checked and recorded in plant records each day, and should also be evaluated by the inspector as he checks the scrubber system:[3]

- Reduction in scrubber recycle flow is an indication of pump impeller wear or line pluggage. Increase in scrubber recycle flow indicates valve or nozzle erosion.
- Scrubber bleed flow reduction is usually associated with line pluggage. Bleed increase can mean a worn valve.
- Scrubber pressure drop increase can be associated with plugging of packing or an unexpected increase in gas or liquor flow.
- Pump discharge pressure increase at proper flow indicates a line restriction - usually plugging.
- Fan inlet and outlet pressure can be used to check flow as well as incorrect damper setting. Occasionally it may indicate gas duct pluggage.
- Slurry bleed concentration is a check against instrument reading associated with bleed flow rate.
- Fan vibration usually indicates buildup on the fan blades.
- Inlet temperature and saturation temperature are recorded because of danger to equipment if saturation is not attained.

- Motor currents are used to determine if flow decrease is caused by impeller wear, line pluggage or simply an incorrect flow meter setting. Fan current can be used as a measure of gas flow.

- Auxiliary items are treated as above.

Electrostatic Precipitators

A properly designed and operated electrostatic precipitator (ESP) should require a relatively low level of routine maintenance but this varies considerably between individual units. Controls for ESP's should be checked daily for sparking rate, electrical reading, and the ash handling system should also be checked daily. Rapper functioning should be checked approximately weekly. The plant should record the electrical readings for each control unit on a daily basis, and these can be checked for abnormal readings. A general assessment of these operating parameters can be made by the inspector, while plant records should indicate the frequency of, and problems discovered during these checks.

If an internal inspection is made, several items should be checked. Interior corrosion may indicate either an air leak through the ESP housing, or moisture carryover from the air heater washer. Discharge wire spacers and hanger weights should be in place, and the wires should hang midway between plates. Wires and electrodes should be examined to insure they are not broken. Dust deposits on the plates greater than a quarter of an inch indicate faulty rappers while a clean plate suggests that the section is shorting out.

INSPECTION CHECKLIST

Data obtained during an inspection can be summarized on forms similar to the ones shown on the following pages. The forms also serve as a record of inspection.

INSPECTION CHECK LIST FOR

ELECTRIC ARC FURNACES I

FACILITY IDENTIFICATION

Facility Name _____

Facility Address _____

Mailing Address _____

Telephone Number _____

Nature of Business _____

Date of Last Inspection _____

Responsible Person to Contact _____

Persons Contacted at Plant Site _____

Inspectors _____

Source Code Number _____

INSPECTION CHECK LIST FOR

OPACITY OBSERVATIONS (II)

Observer's Name _____

Number of Observations _____

Duration of Observations _____

Average percent equivalent opacity from Method 9 Observation:

Control Equipment (Stack) _____

Shop Ventilators _____

During Charging _____

During Tapping _____

Dust Handling Equipment _____

INSPECTION CHECK LIST FOR

PERFORMANCE TEST OBSERVATION (III)

Company Name: _____ Date: _____

Plant Identification and Address: Performance Test By:

_____ _____

_____ _____

_____ _____

Plant Official: _____ Crew Leader: _____

1) Cross-sectional duct dimensions at sampling location

(i) inside circular ☐ rectangular ☐
(ii) outside

2.1) Flow obstructions

(a) upstream from the sampling location _____
(b) downstream from the sampling location _____

2.2) Total no. of sampling points chosen_____

3) Moisture content

☐ assumed _____% moisture
☐ method 4

4) Inside nozzle diameter

5) Leak test

(i) Vacuum gage reading _____ in Hg
(ii) Dry gas meter reading _____ cf in _____sec

6) Impinger bubbles, yes_____ no_____

7) Gas Analysis Procedure No. of samples analyzed _____

8) Cleaning and Sample Recovery, Adequate _____ Careless _____

9) Calibration check Date calibrated

(i) pitot tube _____
(ii) thermometer/thermocouple _____
(iii) dry gas meter _____
(iv) orifice diameter _____
(v) nozzle diameter _____

INSPECTION CHECK LIST FOR

THE OPERATION OF THE ELECTRIC ARC FURNACE (IV)

Initial Charge	Time and Duration	Weight	Composition	Comments
Charging	*	*	*	
Opening of any furnace doors	*			
Additions (Alloy, lime, etc)	*	*	*	
Remove Slag	*			
Second Charge and/or Subsequent Charges				
Back Charging	*	*	*	
Opening of any furnace doors	*			
Additions (Alloy, lime, etc)	*	*	*	
Oxygen Lance	*			
Tapping	*			

INSPECTION CHECK LIST FOR

THE FUME COLLECTION SYSTEM (V)

Type of System(s)

Direct Shell Evacuation (4th Hole) _____

Side Draft Hood _____

Combination Hood _____

Canopy Hood _____

Building Evacuation _____

Pressure in Furnace Shell (Combination and 4th Hole) _____

Average _____

Automatic Control Setting _____

Flow Rate (Total)[a] _____

Furnace (If separate) _____

Shop (If separate) _____

Spark Box _____

Wet _____

Water Injection Rate _____

Dry _____

[a]If the flow of the fume capture system is cyclic in nature, note the time and duration of the cycle.

INSPECTION CHECK LIST FOR

FABRIC FILTER COLLECTORS (VI)

Design Air to Cloth Ratio _____

Operating Air to Cloth Ratio _____

Pressure Drop Across Baghouse _____

Cleaning Cycle Time _____

Type of Cleaning _____

a) shaking _____

b) reverse air _____

c) pulse jet _____

d) combination _____

Inlet temperature _____

INSPECTION CHECK LIST FOR

SCRUBBERS (VII)

Pressure Drop _____

Water Injection Rate _____

Water Recycle Rate _____

Water Make-up Rate _____

Inlet Temperature _____

Throat Control Setting (if venturi) _____

INSPECTION CHECK LIST FOR
ELECTROSTATIC PRECIPITATORS (VIII)

Inlet Temperature	_____
Voltage Measurements and Regulation	_____
Amperage Measurements and Regulation	_____
Rapper Timing (Internal and Duration)	_____
Sparking Rate	_____
Internal Inspection If Necessary[a]	_____
Evidence of Corrosion	_____
Check for Broken Electrodes	_____
Condition of Collection Plates or Tubes	_____
Alignment of Plates	_____
Condition of Rapping Mechanism	_____

[a] Internal inspection only possible if ESP is shut down.

INSPECTION FOLLOW-UP PROCEDURES

After the completion of the inspection, the FEO must determine the compliance status of the source. If an inspection indicates that a source is not operating in compliance with applicable regulations, the FEO should follow the established Agency procedures regarding notice of violation, request for source test, and related matters.

The inspector's findings during his inspection of the plant should be briefly conveyed to the plat official at the site before leaving the premises. Specific violation decisions should neither be made nor discussed in the field.

The inspector should, within 48 hours after the inspection, complete his report on the inspection. This report will consist of updated forms and recommended action and should be forwarded to the supervisor.

Decisions for subsequent action should be made in a conference with the supervisor. If the inspection revealed that the plant was operating normally and if the decision requires no further action, the report should be filed in the source file for future reference.

The FEO checks to ensure that permits have been granted for all applicable processes and equipment and their modifications. For any later public complaints, he determines cause of complaint, records pertinent data, issues violation notices if appropriate, and ascertains adequacy of plans for prevention of future accidents. He periodically reviews emergency procedures plans. He makes sure that all shutdown procedures are being implemented during periods of process curtailment. He coordinates with other agencies participating in pollution reduction effort. As a part of inspection followup procedures, he also checks to see that engineering, procurement, he also checks to see that engineering, proceeding according to the approved plan.

If the inspection revealed a significant change in plant operation, and if the decision is to require a new performance test, the plant official should be so informed in writing.

If the inspection revealed a violation of the opacity standard, then the decision may be to issue an order requiring compliance with the standard.

If the inspection revealed a violation of the opacity standard and if the plant official has claimed an unavoidable malfunction as a reason, then the decision should be to advise the plant operator of the recordkeeping requirements of 40 CFR 60.7, and followup inspection should be planned, prior to any other action.

REFERENCES

1. Inspection Manual for the Enforcement of New Source Performance Standards: Asphalt Concrete Plants. U.S. Environmental Protection Agency, Division of Stationary Source Enforcement. June 1975.

2. Inspection Manual for the Enforcement of New Source Performance Standards: Catalytic Cracking Regenerators. U.S. Environmental Protection Agency, Division of Stationary Source Enforcement. March 1976.

3. Cross, Frank L. Jr. and H. E. Hesketh. Handbook for the Operation and Maintenance of Air Pollution Control Equipment. Technomic Publishing Co., Inc., Westport, Conn. 1975.

SECTION V

PERFORMANCE TEST[1,2]

The NSP Standards require a performance test of any new or modified EAF In order to guarantee the validity of the test, an inspection team will be present at the facility for observation. The team should consist of three enforcement personnel with the following areas of responsibility during the test period:

- Monitor process operating conditions from the control room.
- Make visible observations of opacity and process operations from the plant area.
- Monitor emission testing procedures from the test site.

Each team member will fill out check list type data during the test and will submit a report including analysis of the data and indication of any upset conditions which may have affected the test.

PROCESS OPERATING CONDITIONS

For the purpose of obtaining source test data which is truly representative of the operating characteristics of the EAF being tested, it is extremely important that the test be conducted at or above the maximum production rate at which the particular unit will normally be operated. In certain cases, the EPA may feel that conditions other than the maximum production operating rate of the unit should be used to achieve valid test results. In such cases, the EPA will specify the conditions at which source testing must take place. In all cases, inspectors must personally verify that the

unit is operating at the specified conditions. Such verification should be made with unit operator and plant manager, and inspectors should observe process controls (i.e., gauges, rate meters, and recorders) to determine that operating conditions are as specified. Inspectors should periodically check operating conditions of the EAF and control equipment throughout the test, noting changes in operating parameters such as temperature, pressure, flow rate, and type and quantity of each charge.

Inspectors should be careful to note that the sampling is being performed at the proper location(s) in the system, namely at the exit of the control device. The location and operation of dampers which may allow dilution air into the system should be observed and noted, to be sure that their operation does not interfere with the test. Often a baghouse will have a provision for the automatic introduction of cold dilution air to protect the bags from temperature excursions which could damage the bags. In the event of this occurance the test would be invalid, therefore the observer should be sure that the dilution air system is not engaged during a test.

Since the NSPS for the EAF also apply to shop emissions from the EAF, it is very important that shop emissions due to only the EAF are measured. Most shops housing an EAF also contain areas where other processes are performed, such as pouring from the ladle into ingots or smaller molds. In order to assure that non EAF related emissions do not contribute to test observations it is necessary that the observer carefully note the time of charging and tapping the EAF. It would be advisable to have the observer explain to the owner or operator the potential for mixed emissions being observed as coming from the EAF, so that the owner or operator can schedule all operations causing emissions into the shop so as not to coincide with periods of EAF shop emissions. Only direct EAF emissions are considered under the NSPS.

PROCESS OBSERVATIONS

The pollutants generated by an EAF which are limited in the NSPS are particulate matter as it exits the control equipment, and as it escapes the furnace and capture system in the form of visible emissions. The regulations apply to the EAF, the fume collection system, the shop housing them, the particulate control equipment, and the dust-handling equipment. The NSPS apply to the concentration of particulate emissions exiting the particulate control device(s) and its opacity, as well as the opacity of the emissions from the shop and dust handling equipment.

At the time of the performance test, the inspector should carefully note the existing layout of the EAF, fume capture system, and control equipment as well as the operating range parameters of the unit. The control equipment is particularly important as well as the type of scrap being charged to the EAF, since subsequent source performance testing will be affected by any modifications in this equipment. The inspector should note the type, size, and model of the particulate collector, as well as the method and schedule for bag cleaning, the voltage for electrostatic precipitators, or the pressure drop and water consumption for a scrubber. If possible a photographic record should be made of at least the control equipment and possibly the fume capture system.

EMISSION TEST OBSERVATIONS

Emission source testing discussed here concerns determining compliance of new sources with EPA New Source Performance Standards. During the source testing operations, field inspectors should periodically spot check testing procedures, equipment, and data to make certain that the test is valid.

All performance tests should be conducted while the unit being tested is operating at or above maximum production rate at which the unit will normally be operated. If the EPA Administrator feels that other conditions should be used to achieve valid test results, such conditions will be used as basis for testing.

Traversing (EPA Method No.1)

Of first importance is the selection of a sampling point and determination of the minimum number of traverse points to ensure the collection of a representative sample. Inspectors should make certain that the sampling site selected is a minimum of eight (8) diameters downstream and at least two (2) diameters upstream from any disturbance to the flow of gases within the duct or stack which is being sampled. Such disturbances are commonly caused by expansions or contractions, bends, observable cross members, or other entering ducts.

Stack or Duct Gas Velocity Determination (EPA Method No. 2)

In the determination of gas velocity within the duct or stack, the inspector should be certain that all data from each traverse point is carefully and accurately recorded, as this is the basic information used to determine the isokinetic sampling rate. Each point shall be identified by a number and the following information shall be recorded for each point: Velocity head in inches of water, stack (duct) pressure in inches of mercury, and temperature (unless the total temperature variation with time is less than $10^{o}C$). Care should be taken to determine that a type "S" pitot tube is used to obtain the velocity head readings and that this tube is of sufficient length to reach all traverse points. The pitot tube should be graduated with temporary markings (i.e., tape or chalk marks) such that each traverse point may be reached by successively moving the tube deeper into or withdrawing it further from the duct or stack being sampled. All tubing and connectors between the pitot tube and the inclined

manometer or draft gauge should be tight and leak-free. An inclined manometer or draft gauge should be used to obtain velocity head readings from the pitot tube. Make certain that this gauge is filled with sufficient colored liquid to give readings throughout its range of calibration, and that the manometer liquid level is adjusted to read "zero" with the end of the pitot tube shielded from incidental breezes, prior to beginning the velocity head measurement. Periodically check to make sure that no constriction occurs in the hose connections during the course of the velocity head measurement.

The most common means of stack temperature measurement is by thermocouple and potentiometer; operation of this equipment is rather straight-forward although several points should be checked to ensure accurate measurement. The thermocouple connecting wires should be securely tightened to the terminal lugs on the potentiometer, and it should be determined that the thermocouple circuit is complete (an open circuit will be evident if the potentiometer fails to balance, giving readings off the scale of the instrument). If the potentiometer being used is not an automatic compensating type (automatic reference to ambient temperature), see that the ambient air temperature has been recorded or that the potentiometer scale has been calibrated with this temperature as a reference. While taking gas temperature readings, sufficient time should be allowed (normally about five minutes) for the thermocouple probe to reach thermal equilibrium with the duct gas before taking the first few readings.

As part of the data necessary for the velocity determination, the static pressure within the stack or duct should be measured. This is done using a mercury filled "U" tube manometer, one end of which is open to the atmosphere and the other connected to a probe extending into the duct or stack itself. Again, the tubing from the probe to the manometer must be free of constrictions and tightly connected at both ends. A barometric pressure reading (of atmospheric pressure) in inches of mercury, should be obtained from a standard barometer located in the general vicinity of the

test site; this can be a wall mounted barometer in the plant offices, laboratory, or any convenient location which is at ambient temperature and free of vibration.

Gas Analysis (EPA Method No. 3)

Two methods of sampling are acceptable in obtaining an analysis of the gases within a duct or stack: grab sampling and integrated sampling. In the grab sampling method, the gases are drawn through a probe directly into an Orsat type analyzer. If grab sampling is used, inspectors should make sure that the sampling probe is of pyrex or stainless steel (316) construction and that a small piece of glass wool has been loosely inserted in the end of the probe to stop particles. A flexible tubing is used to connect the probe with the analyzer, however, there must be some provision for purging the line; most often a oneway squeeze bulb is used. During analysis using the Orsat, notice that care is being taken to equalize the liquid levels with the leveling bottle when readings are taken, and that the efficiencies of the absorbing solutions are such that no more than ten (10) passes are required to achieve constant readings (usually three to five passes will produce a constant reading).

The integrated sampling method utilizes the same type of probe, but requires an air-condenser to remove moisture, as well as a valve, pump, and rotameter in line between the probe and sample. If the velocity of the gas varies with time or if a "sample traverse" is taken, a type "S" pitot tube may be used along with the probe so that the sampling rate can be kept proportional to the gas velocity. The rotameter should have a flow range from 0 to 0.001 cubic meters/min. In operation, the sampling line is purged using the pump and the pre-evacuated flexible sample bag is attached to the system via a quick disconnect coupling. Sampling is carried out at a rate proportional to the gas velocity using the rotameter as a guide and the valve for control. The sample bag should be sufficiently large enough to obtain a sample of about 0.232 to 0.786 cubic meters.

Again, all connections must be leak-free. After sampling is complete, the bag is transferred to an Orsat apparatus for analysis. Gas analysis must be performed whenever a determination of particulate matter (Method 5), sulfur dioxide (Method 6), or carbon monoxide (Method 10) is carried out.

Particulate Matter (EPA Method No. 5)

When sampling for particulate matter according to EPA Method 5, the minimum sampling volume will be 4.5 dscm (160 dscf) and the sampling period will be at least 4 hours. When a single EAF is sampled, the sampling time for each run shall also include an integral number of heats. Shorter sampling times may only be used if previously approved by the Administrator. During the sampling operation, the inspector should check the probe to make sure that it is either pyrex or stainless steel (316) to ensure non-reactivity of the probe material with either the gas stream or the sample being collected. These materials are selected also because of their resistance to distortion at elevated temperature. The probe nozzle must be pointed opposed to the direction of gas flow while sample is being collected, and a type "S" pitot tube must be attached to it in order to monitor the gas velocity. Check to determine that the probe heater is working (about 120°C at the probe outlet), and that a fresh filter was placed in the filter holder before beginning the test. The filter-heating system must also be operating.

The impinger box must be filled with an ice and water bath and there should be an additional supply of ice on hand to maintain the bath cold enough so that the impinger temperature remains at 21°C or less throughout the test. Four Greenburg-Smith type impingers are placed in series in the ice bath and connected by means of ball and socket joints. All glassware should be clean and the ball joints should be snugly connected and secured with the proper size metal spring clamp. Note that the second impinger in the series has the conventional impingement nozzle, but that all others have the straight glass tubing extending to 1/2 inch from the bottom. The first

two impingers in the series have exactly 100 ml of water each (measured by graduated cylinder); the third is empty, and the fourth must contain 200 grams (pre-weighted) of silica gel, preferably the indicating type.

A thermometer should be placed in or just after the fourth impinger, followed by a check valve to prevent reverse-flow surges. From this point the line should contain the following components: vacuum gauge, with temperature dials at inlet and outlet, and an orifice meter connected to an inclined manometer, respectively.

Check to make sure that all gauges and temperature dials are operating properly, and that all appropriate valves are in the open position (bypass will normally remain closed), that pump and test meter are correctly functioning, and be sure that connecting lines are attached to their proper inlets and outlets - reverse order is a common mistake here. Both pitot and orifice manometers should be checked out as previously described.

The following information should be recorded from the data sheets for purpose of spot-checking the accuracy of the calculated final results.

(a) Average velocity, cm H_2O

(b) Average gas temperature, ^oC

(c) Static pressure in duct or stack, mm Hg

(d) Barometric pressure, mm Hg

(e) Diameter or width and height of duct or stack

(f) Sampling time (start and finish)

(g) Average pressure differential across orifice meter

(h) Gas sample volume

(i) Gas sample temperature at dry gas meter (average for inlet and for outlet)

(j) Impinger bath temperature, ^{o}C

(k) Impinger temperature, ^{o}C

(l) Volume of condensate collected in impingers, ml

Opacity (EPA Method 9)

Measurement of opacity must be performed in accordance with EPA Method 9 and will require a trained observer to locate a suitable site from which to observe the opacity of the particulate emission control equipment, the shop, and the dust handling equipment. The opacity observation sites should be chosen before the actual date of the compliance test. It will also be necessary for the observer to coordinate the time of observations with the actual time of the process operations, since emissions from the shop are allowed to be significantly higher during charging and tapping. The timing of the opacity observations is critical to the determination of compliance of the EAF and related control equipment with the NSPS.

Emission Monitoring

Since continuous emission source monitoring is required for opacity of particulate materials, inspection must be made of monitoring instruments to determine that they are properly installed and operating, and that proper calibration and maintenance procedures are being followed.

For particulate emission monitoring the photoelectric monitor may be used. This essentially measures the opacity or optical density of a stream of gases. Characteristically such installations are in widespread use and operate on the principal that particulate matter, in a gas stream, will interrupt a beam of light (between source and detector) in proportion to its concentration in the gas stream. In practice the system consists of a light source, a detector (photo-multiplier tube), and a recorder. Often an alarm feature is incorporated in the system to sound when the opacity reaches a predetermined level. These systems work well if

maintenance and calibration are performed on a regular and thorough basis. It should be determined that: calibration is frequently performed, optical surfaces are kept clean and in proper repair, proper alignment of source and detector is maintained, and that recorder and alarm systems are in good working order. Variations exist between many different suppliers of such opacity metering systems, however, the principle involved as well as the operating problems are basically alike for these systems in general.

Some systems may have both the source and detector on the same side of the stack, utilizing reflectance to return the light beam. Calibration and zeroing is quite a problem while the plant is operating; one technique often employed uses a sliding tube to connect the source and detector and thus exclude the gas stream from the beam path for calibration.

Source monitoring installations should be free from vibration, shock, and excessive heat, should be weathertight and so placed as to provide safe and convenient access for calibration purposes.

REFERENCES

1. Inspection Manual for the Enforcement of New Source Performance Standards: Asphalt Concrete Plants. U.S. Environmental Protection Agency, Division of Stationary Source Enforcement. June 1975.

2. Inspection Manual for the Enforcement of New Source Performance Standards: Catalytic Cracking Regenerators. U.S. Environmental Protection Agency, Division of Stationary Source Enforcement. March 1976.

APPENDIX A

PART 60 - STANDARDS OF PERFORMANCE FOR NEW STATIONARY SOURCES

ELECTRIC ARC FURNACES IN THE STEEL INDUSTRY

Title 40—Protection of Environment

CHAPTER I—ENVIRONMENTAL PROTECTION AGENCY

SUBCHAPTER C—AIR PROGRAMS

[FRL 407-3]

PART 60—STANDARDS OF PERFORMANCE FOR NEW STATIONARY SOURCES

Electric Arc Furnaces in the Steel Industry

On October 21, 1974 (39 FR 37466), under section 111 of the Clean Air Act, as amended, the Environmental Protection Agency (EPA) proposed standards of performance for new and modified electric arc furnaces in the steel industry. Interested persons participated in the rulemaking by submitting written comments to EPA. A total of 19 comment letters was received, seven of which came from the industry, eight from State and local air pollution control agencies, and four from Federal agencies. The Freedom of Information Center, Room 202 West Tower, 401 M Street, S.W., Washington, D.C., has copies of the comment letters received and a summary of the issues and Agency responses available for public inspection. In addition, copies of the issue summary and Agency responses may be obtained upon written request from the EPA Public Information Center (PM-215), 401 M Street, S.W., Washington, D.C. 20460 (specify—Public Comment Summary: Electric Arc Furnaces in the Steel Industry). The comments have been carefully considered, and where determined by the Administrator to be appropriate, changes have been made to the proposed regulation and are incorporated in the regulation promulgated herein.

The bases for the proposed standards are presented in "Background Information for Standards of Performance: Electric Arc Furnaces in the Steel Industry," (EPA-450/2-74-017a, b). Copies of this document are available on request from the Emission Standards and Engineering Division, Environmental Protection Agency, Research Triangle Park, N.C. 27711, Attention: Mr. Don R. Goodwin.

SUMMARY OF REGULATION

The promulgated standards of performance for new and modified electric arc furnaces in the steel industry limit particulate matter emissions from the control device, from the shop, and from the dust-handling equipment. Emissions from the control device are limited to less than 12 mg/dscm (0.0052 gr/dscf) and 3 percent opacity. Furnace emissions escaping capture by the collection system and exiting from the shop are limited to zero percent opacity, but emissions greater than this level are allowed during charging periods and tapping periods. Emissions from the dust-handling equipment are limited to less than 10 percent opacity. The regulation requires monitoring of flow rates through each separately ducted emission capture hood and monitoring of the pressure inside the electric arc furnace for direct shell evacuation systems. Additionally, continuous monitoring of opacity of emissions from the control device is required.

SIGNIFICANT COMMENTS AND CHANGES MADE TO THE PROPOSED REGULATION

All of the comment letters received by EPA contained multiple comments. The most significant comments and the differences between the proposed and promulgated regulations are discussed below. In addition to the discussed changes, a number of paragraphs and sections of the proposed regulation were reorganized in the regulation promulgated herein.

(1) *Applicability.* One commentator questioned whether electric arc furnaces that use continuous feeding of prereduced ore pellets as the primary source of iron can comply with the proposed standards of performance since the standards were based on data from conventionally charged furnaces. Electric arc furnaces that use prereduced ore pellets were not investigated by EPA because this process was still being researched by the steel industry during development of the standard and was several years from extensive use on commercial sized furnaces. Emissions from this type of furnace are generated at different rates and in different amounts over the steel production cycle than emissions from conventionally charged furnaces. The proposed standards were structured for the emission cycle of a conventionally charged electric arc furnace. The standards, consequently, are not suitable for application to electric arc furnaces that use prereduced ore pellets as the primary source of iron. Even with use of best available control technology, emissions from these furnaces may not be controllable to the level of all of the standards promulgated herein; however, over the entire cycle the emissions may be less than those from a well-controlled conventional electric arc furnace. Therefore, EPA believes that standards of performance for electric arc furnaces using prereduced ore pellets require a different structure than do standards for conventionally charged furnaces. An investigation into the emission reduction achievable and best available control technology for these furnaces will be conducted in the future and standards of performance will be established. Consequently, electric arc furnaces that use continuous feeding of prereduced ore pellets as the primary source of iron are not subject to the requirements of this subpart.

(2) *Concentration standard for emissions from the control device.* Four commentators recommended revising the concentration standard for the control device effluent to 18 mg/dscm (0.008 gr/dscf) from the proposed level of 12 mg/dscm (0.0052 gr/dscf). The argument for the higher standard was that the proposed standard had not been demonstrated on either carbon steel shops or on combination direct shell evacuation-canopy hood control systems. Emission measurement data presented in "Background Information for Standards of Performance: Electric Arc Furnaces in the Steel Industry" show that carbon steel shops as well as alloy steel shops can reduce particulate matter emissions to less than 12 mg/dscm by application of well-designed fabric filter collectors. These data also show that combination direct shell evacuation-canopy hood systems can control emission levels to less than 12 mg/dscm. EPA believes that revising the standard to 18 mg/dscm would allow relaxation of the design requirements of the fabric filter collectors which are installed to meet the standard. Accordingly, the standard promulgated herein limits particulate matter emissions from the control device to less than 12 mg/dscm.

Two commentators requested that specific concentration and opacity standards be established for emissions from scrubber controlled direct shell evacuation systems. The argument for a separate concentration standard was that emissions from scrubber controlled direct shell evacuation systems can be reduced to only about 50 mg/dscm (0.022 gr/dscf) and, thus, even with the proposed proration provisions under § 60.274(b), it is not possible to use scrubbers and comply with the proposed concentration standard. The commentators also argued that a separate opacity standard was necessary for scrubber equipped systems because the effluent is more concentrated and, thus, reflects and scatters more visible light than the effluent from fabric filter collectors.

EPA would like to emphasize that use of venturi scrubbers to control the effluent from direct shell evacuation systems is not considered to be a "best system of emission reduction considering costs." The promulgated standards of performance for electric arc furnaces reflect the degree of emission reduction achievable for systems discharging emissions through fabric filter collectors. EPA believes, however, that the regulation does not preclude use of control systems that discharge direct shell evacuation system emissions through venturi scrubbers. Available information indicates that effluent from a direct shell evacuation system can be controlled to 0.01 gr/dscf or less using a high energy venturi scrubber (pressure drop greater than 60 in. w.g.). If the scrubber reduces particulate matter emissions to 0.01 gr/dscf, then the fabric filter collector is only required to reduce the emissions from the canopy hood to about 0.004 gr/dscf in order for the emission rates to be less than 0.0052 gr/dscf. Therefore, it is technically feasible for a facility to use a high energy scrubber and a fabric filter to control the combined furnace emissions to less than 0.0052 gr/dscf. A concentration standard of 0.022 gr/dscf for scrubbers would not require installation of control devices which have a collection efficiency comparable to that of best control technology (well-designed and well-operated fabric filter collector). In addition, electric arc furnace particulate matter emissions are invisible to the human eye at effluent concentrations less than 0.01 gr/dscf

when emitted from average diameter stacks. For the reasons discussed above, neither a separate concentration standard nor a separate opacity standard will be established as suggested by the commentators.

(3) *Control device opacity standard.* Four commentators suggested that the proposed control device opacity standard either be revised from less than five percent opacity to less than ten percent opacity based on six-minute average values or that a time exemption be provided for visible emissions during the cleaning cycle of shaker-type fabric filter collectors.

EPA's experience indicates that a time exemption to allow for puffing during the cleaning cycle of the fabric filter collector is not necessary. For this application, a well-designed and well-maintained fabric filter collector should have no visible emissions during all phases of the operating cycle. The promulgated opacity standard, therefore, does not provide a time exemption for puffing of the collector during the cleaning cycle.

The suggested revision of the proposed opacity standard to ten percent (based on six-minute average values) was considered in light of recent changes in Method 9 of Appendix A to this part (39 FR 39872). The revisions to Method 9 require that compliance with opacity standards be determined by averaging sets of 24 consecutive observations taken at 15-second intervals (six-minute averages). All six-minute average values of the opacity data used as the basis for the proposed opacity standard are zero percent. EPA believes that the ten percent standard suggested by the commentators would allow much less effective operation and maintenance of the control device than is required by the concentration standard. On the basis of available data, a five percent opacity standard (based on six-minute average values) also is unnecessarily lenient.

The proposed opacity standard of zero percent was revised slightly upward to be consistent with previously established opacity standards which are less stringent than their associated concentration standards without being unduly lax. The promulgated opacity standard limits emissions from the control device to less than three percent opacity (based on averaging sets of 24 consecutive observations taken at 15-second intervals). Use of six-minute average values to determine compliance with applicable opacity standards makes opacity levels of any value possible, instead of the previous method's limitation of values at discrete intervals of five percent opacity.

(4) *Standards on emissions from the shop.* Twelve commentators questioned the value of the shop opacity standards, arguing that the proposed standards are unenforceable, too lenient, or too stringent.

Commentators arguing for less stringent or more stringent standards suggested various alternative opacity values for the charging or tapping period standards, different averaging periods, and a different limitation on emissions from the shop during the meltdown and refining period of the EAF operation. Because of these comments, the basis for these standards was thoroughly reevaluated, including a review of all available data and follow-up contacts with commentators who had offered suggestions. The follow-up contacts revealed that the suggested revisions were opinions only and were not based on actual data. The reevaluation of the data bases of the proposed standards reaffirmed that the standards represented levels of emission control achievable by application of best control technology considering costs. Hence, EPA concluded that the standards are reasonable (neither too stringent nor too lenient) and that revision of these standards is not warranted in the absence of specific information indicating such a need.

Four commentators believed that the proposed standards were impractical to enforce for the following reasons:

(1) Intermingling of emissions from non-regulated sources with emissions from the electric arc furnaces would make enforcement of the standards impossible.

(2) Overlap of operations at multi-furnace shops would make it difficult to identify the periods in which the charging and tapping standards are applicable.

(3) Additional manpower would be required in order to enforce these standards.

(4) The standards would require access to the shop, providing the source with notice of surveillance and the results would not be representative of routine emissions.

(5) The standards would be unenforceable at facilities with a mixture of existing and new electric arc furnaces in the same shop.

EPA considered all of the comments on the enforceability of the proposed standards and concluded that some changes were appropriate. The proposed regulation was reconsidered with the intent of developing more enforceable provisions requiring the same level of control. This effort resulted in several changes to the regulation, which are discussed below.

The promulgated regulation retains the proposed limitations on the opacity of emissions exiting from the shop except for the exemption of one minute/hour per EAF during the refining and meltdown periods. The purpose of this exemption was to provide some allowance for puffs due to "cave-ins" or addition of iron ore or burnt lime through the slag door. Only one suspected "cave-in" and no puffs due to additions occurred during 15 hours of observations at a well-controlled facility; therefore, it was concluded that these brief uncontrolled puffs do not occur frequently and whether or not a "cave-in" has occurred is best evaluated on a case-by-case basis. This approach was also necessitated by recent revisions to Method 9 (39 FR 39872) which require basing compliance on six-minute averages of the observations. Use of six-minute averages of opacity readings is not consistent with allowing a time exemption. Determination of whether brief puffs of emissions occurring during refining and meltdown periods are due to "cave-ins" will be made at the time of determination of compliance. If such emissions are considered to be due to a "cave-in" or other uncontrollable event, the evaluation may be repeated without any change in operating conditions.

The purpose of the proposed opacity standards limiting the opacity of emissions from the shop was to require good capture of the furnace emissions. The method for routinely enforcing these capture requirements has been revised in the regulation promulgated herein in that the owner or operator is now required to demonstrate compliance with the shop opacity standards just prior to conducting the performance test on the control device. This performance evaluation will establish the baseline operating flow rates for each of the canopy hoods or other fume capture hoods and the furnace pressures for the electric arc furnace using direct shell evacuation systems. Continuous monitoring of the flow rate through each separately ducted control system is required for each electric arc furnace subject to this regulation. Owners or operators of electric arc furnaces that use a direct shell evacuation system to collect the refining and meltdown period emissions are required to continuously monitor the pressure inside the furnace free space. The flow rate and pressure data will provide a continuous record of the operation of the control systems. Facilities that use a building evacuation system for capture and control of emissions are not subject to the flow rate and pressure monitoring requirements if the building roof is never opened.

The shop opacity standards promulgated herein are applicable only during demonstrations of compliance of the affected facility. At all other times the operating conditions must be maintained at the baseline values or better. Use of operating conditions that will result in poorer capture of emissions constitutes unacceptable operation and maintenance of the affected facility. These provisions of the promulgated regulation will allow evaluation of the performance of the collection system without interference from other emission sources because the non-regulated sources can be shut down for the duration of the evaluation. The monitoring of operations requirements will simplify enforcement of the regulation because neither the enforcing agency nor the owner or operator must show that any apparent violation was or was not due to operation of non-regulated sources.

The promulgated regulation's monitoring of operation requirements will add negligible additional costs to the total cost of complying with the promulgated standards of performance. Flow rate monitoring devices of sufficient accuracy to meet the requirements of § 60.274(b) can be installed for $600–$4000 depending on the flow profile of the area being monitored and the complexity of the monitoring device. Devices that monitor

the pressure inside the free space of an electric arc furnace equipped with a direct shell evacuation system are installed by most owners or operators in order to obtain better control of the furnace operation. Consequently, for most owners or operators, the pressure monitoring requirements will only result in the additional costs for installation and operation of a strip chart recorder. A suitable strip chart recorder can be installed for less than $600.

There are no data reduction requirements in the flow rate monitoring provisions. The pressure monitoring provisions for the direct shell evacuation control systems require recording of the pressures as 15-minute integrated averages. The pressure inside the electric arc furnace above the slag and metal fluctuates rapidly. Integration of the data over 15-minute periods is necessary to provide an indication of the operation of the system. Electronic and mechanical integrators are available at an initial cost of less than $600 to accomplish this task. Electronic circuits to produce a continuous integration of the data can be built directly into the monitoring device or can be provided as a separate modular component of the monitoring system. These devices can provide a continuous integrated average on a strip chart recorder.

(5) *Emission monitoring.* Three commentators suggested deletion of the proposed opacity monitoring requirements because long path lengths and multiple compartments in pressurized fabric filter collectors make monitoring infeasible. The proposed opacity monitoring requirements have not been deleted because opacity monitoring is feasible on the control systems of interest (closed or suction fabric filter collectors). This subpart also permits use of alternative control systems which are not amenable to testing and monitoring using existing procedures, providing the owner or operator can demonstrate compliance by alternative methods. If the owner or operator plans to install a pressurized fabric filter collector, he should submit for the Administrator's approval the emission testing procedures and the method of monitoring the emissions of the collector. The opacity of emissions from pressurized fabric filter collectors can be monitored using present instrumentation at a reasonable cost. Possible alternative methods for monitoring of emissions from pressurized fabric filter collectors include: (1) monitoring of several compartments by a conventional path length transmissometer and rotation of the transmissometer to other groups of collector compartments on a scheduled basis or (2) monitoring with several conventional path length transmissometers. In addition to monitoring schemes based on conventional path length transmissometers, a long path transmissometer could be used to monitor emissions from a pressurized fabric filter collector. Transmissometers capable of monitoring distances up to 150 meters are commercially available and have been demonstrated to accurately monitor opacity. Use of long path transmissometers on pressurized fabric filter collectors has yet to be demonstrated, but if properly installed there is no reason to believe that the transmissometer will not accurately and representatively monitor emissions. The best location for a long path transmissometer on a fabric filter collector will depend on the specific design features of both; therefore, the best location and monitoring procedure must be established on an individual basis and is subject to the Administrator's approval.

Two commentators argued that the proposed reporting requirements would result in excessive paperwork for the owner or operator. These commentators suggested basing the reporting requirements on hourly averages of the monitoring data. EPA believes that one-hour averaging periods would not produce values that would meaningfully relate to the operation of the fabric filter collector and would not be useful for comparison with Method 9 observations. In light of the revision of Method 9 to base compliance on six-minute averages, all six-minute periods in which the average opacity is three percent or greater shall be reported as periods of excess emissions. EPA does not believe that this requirement will result in an excessive burden for properly operated and maintained facilities.

(6) *Test methods and procedures.* Two commentators questioned the precision and accuracy of Method 5 of Appendix A to this part when applied to gas streams with particulate matter concentrations less than 12 mg/dscm. EPA has reviewed the sampling and analytical error associated with Method 5 testing of low concentration gas streams. It was concluded that if the recommended minimum sample volume (160 dscf) is used, then the errors should be within the acceptable range for the method. Accordingly, the recommended minimum sample volumes and times of the proposed regulation are being promulgated unchanged.

Three commentators questioned what methodology was to be used in testing of open or pressurized fabric filter collectors. These commentators advocated that EPA develop a reference test method for testing of pressurized fabric filter collectors. From EPA's experience, development of a single test procedure for representative sampling of all pressurized fabric filter collectors is not feasible because of significant variations in the design of these control devices. Test procedures for demonstrating compliance with the standard, however, can be developed on a case-by-case basis. The promulgated regulation does require that the owner or operator design and construct the control device so that representative measurement of the particulate matter emissions is feasible.

Provisions in 40 CFR 60.8(b) allow the owner or operator upon approval by the Administrator to show compliance with the standard of performance by use of an "equivalent" test method or "alternative" test method. For pressurized fabric filter collectors, the owner or operator is responsible for development of an "alternative" or "equivalent" test procedure which must be approved prior to the determination of compliance.

Depending on the design of the pressurized fabric filter collector, the performance test may require use of an "alternative" method which would produce results adequate to demonstrate compliance. An "alternative" method does not necessarily require that the effluent be discharged through a stack. A possible alternative procedure for testing is representative sampling of emissions from a randomly selected, representative number of compartments of the collector. If the flow rate of effluent from the compartments or other conditions are not amenable to isokinetic sampling, then subisokinetic sampling (that is, sampling at lower velocities than the gas stream velocity, thus biasing the sample toward collection of a greater concentration than is actually present) should be used. If a suitable "equivalent" or "alternative" test procedure is not developed by the owner or operator, then total enclosure of the collector and testing by Method 5 of Appendix A to this part is required.

A new paragraph has been added to clarify that during emission testing of pressurized fabric filter collectors the dilution air vents must be blocked off for the period of testing or the amount of dilution must be determined and a correction applied in order to accurately determine the emission rate of the control device. The need for dilution air correction was discussed in "Background Information for Standards of Performance: Electric Arc Furnaces in the Steel Industry" but was not an explicit requirement in the proposed regulation.

(7) *Miscellaneous.* Some commentators on the proposed standards of performance for ferroalloy production facilities (39 FR 37470) questioned the rationale for the differences between the electric arc furnace regulation and the ferroalloy production facilities regulation with respect to methods of limiting fugitive emissions. The intent of both regulations is to require effective capture and control of emissions from the source. The standards of performance for electric arc furnaces regulate collection efficiency by placing limitations on the opacity of emissions from the shop. The performance of the control system is evaluated at the shop roof and/or other areas of emission to the atmosphere because it is not possible to evaluate the performance of the collection system inside the shop. In electric arc furnace shops, collection systems for capture of charging and tapping period emissions must be located at least 30 or 40 feet above the furnace to allow free movement of the crane which charges raw materials to the furnace. Fumes from charging, tapping, and other activities rise and accumulate in the upper areas of the building, thus obscuring visibility. Because of the poor visibility within the shop, the performance of the emission collection system can only be evaluated at the point where emissions are discharged to the atmosphere. Ferroalloy electric submerged arc fur-

nace operations do not require this large free space between the furnace and the collection device (hood). Visibility around the electric submerged arc furnace is good. Consequently, the performance of the collection device on a ferroalloy furnace may be evaluated at the collection area rather than at the point of discharge to the atmosphere.

Effective date. In accordance with section 111 of the Act, these regulations prescribing standards of performance for electric arc furnaces in the steel industry are effective on September 23, 1975, and apply to electric arc furnaces and their associated dust-handling equipment, the construction or modification of which was commenced after October 21, 1974.

Dated: September 15, 1975.

JOHN QUARLES,
Acting Administrator.

Part 60 of Chapter I, Title 40 of the Code of Federal Regulations is amended as follows:

1. The table of sections is amended by adding subpart AA as follows:

* * * * *

Subpart AA—Standards of Performance for Steel Plants: Electric Arc Furnaces

60.270 Applicability and designation of affected facility.
60.271 Definitions.
60.272 Standard for particulate matter.
60.273 Emission monitoring.
60.274 Monitoring of operations.
60.275 Test methods and procedures.

* * * * *

2. Part 60 is amended by adding subpart AA as follows:

* * * * *

Subpart AA—Standards of Performance for Steel Plants: Electric Arc Furnaces

§ 60.270 Applicability and designation of affected facility.

The provisions of this subpart are applicable to the following affected facilities in steel plants: electric arc furnaces and dust-handling equipment.

§ 60.271 Definitions.

As used in this subpart, all terms not defined herein shall have the meaning given them in the Act and in subpart A of this part.

(a) "Electric arc furnace" (EAF) means any furnace that produces molten steel and heats the charge materials with electric arcs from carbon electrodes. Furnaces from which the molten steel is cast into the shape of finished products, such as in a foundry, are not affected facilities included within the scope of this definition. Furnaces which, as the primary source of iron, continuously feed prereduced ore pellets are not affected facilities within the scope of this definition.

(b) "Dust-handling equipment" means any equipment used to handle particulate matter collected by the control device and located at or near the control device for an EAF subject to this subpart.

(c) "Control device" means the air pollution control equipment used to remove particulate matter generated by an EAF(s) from the effluent gas stream.

(d) "Capture system" means the equipment (including ducts, hoods, fans, dampers, etc.) used to capture or transport particulate matter generated by an EAF to the air pollution control device.

(e) "Charge" means the addition of iron and steel scrap or other materials into the top of an electric arc furnace.

(f) "Charging period" means the time period commencing at the moment an EAF starts to open and ending either three minutes after the EAF roof is returned to its closed position or six minutes after commencement of opening of the roof, whichever is longer.

(g) "Tap" means the pouring of molten steel from an EAF.

(h) "Tapping period" means the time period commencing at the moment an EAF begins to tilt to pour and ending either three minutes after an EAF returns to an upright position or six minutes after commencing to tilt, whichever is longer.

(i) "Meltdown and refining" means that phase of the steel production cycle when charge material is melted and undesirable elements are removed from the metal.

(j) "Meltdown and refining period" means the time period commencing at the termination of the initial charging period and ending at the initiation of the tapping period, excluding any intermediate charging periods.

(k) "Shop opacity" means the arithmetic average of 24 or more opacity observations of emissions from the shop taken in accordance with Method 9 of Appendix A of this part for the applicable time periods.

(l) "Heat time" means the period commencing when scrap is charged to an empty EAF and terminating when the EAF tap is completed.

(m) "Shop" means the building which houses one or more EAF's.

(n) "Direct shell evacuation system" means any system that maintains a negative pressure within the EAF above the slag or metal and ducts these emissions to the control device.

§ 60.272 Standard for particulate matter.

(a) On and after the date on which the performance test required to be conducted by § 60.8 is completed, no owner or operator subject to the provisions of this subpart shall cause to be discharged into the atmosphere from an electric arc furnace any gases which:

(1) Exit from a control device and contain particulate matter in excess of 12 mg/dscm (0.0052 gr/dscf).

(2) Exit from a control device and exhibit three percent opacity or greater.

(3) Exit from a shop and, due solely to operations of any EAF(s), exhibit greater than zero percent shop opacity except:

(i) Shop opacity greater than zero percent, but less than 20 percent, may occur during charging periods.

(ii) Shop opacity greater than zero percent, but less than 40 percent, may occur during tapping periods.

(iii) Opacity standards under paragraph (a)(3) of this section shall apply only during periods when flow rates and pressures are being established under § 60.274 (c) and (f).

(iv) Where the capture system is operated such that the roof of the shop is closed during the charge and the tap, and emissions to the atmosphere are prevented until the roof is opened after completion of the charge or tap, the shop opacity standards under paragraph (a)(3) of this section shall apply when the roof is opened and shall continue to apply for the length of time defined by the charging and/or tapping periods.

(b) On and after the date on which the performance test required to be conducted by § 60.8 is completed, no owner or operator subject to the provisions of this subpart shall cause to be discharged into the atmosphere from dust-handling equipment any gases which exhibit 10 percent opacity or greater.

§ 60.273 Emission monitoring.

(a) A continuous monitoring system for the measurement of the opacity of emissions discharged into the atmosphere from the control device(s) shall be installed, calibrated, maintained, and operated by the owner or operator subject to the provisions of this subpart.

(b) For the purpose of reports under § 60.7(c), periods of excess emissions that shall be reported are defined as all six-minute periods during which the average opacity is three percent or greater.

§ 60.274 Monitoring of operations.

(a) The owner or operator subject to the provisions of this subpart shall maintain records daily of the following information:

(1) Time and duration of each charge;

(2) Time and duration of each tap;

(3) All flow rate data obtained under paragraph (b) of this section, or equivalent obtained under paragraph (d) of this section; and

(4) All pressure data obtained under paragraph (e) of this section.

(b) Except as provided under paragraph (d) of this section, the owner or operator subject to the provisions of this subpart shall install, calibrate, and maintain a monitoring device that continously records the volumetric flow rate through each separately ducted hood. The monitoring device(s) may be installed in any appropriate location in the exhaust duct such that reproducible flow rate monitoring will result. The flow rate monitoring device(s) shall have an accuracy of ±10 percent over its normal operating range and shall be calibrated according to the manufacturer's instructions. The Administrator may require the owner or operator to demonstrate the accuracy of the monitoring device(s) relative to Methods 1 and 2 of Appendix A of this part.

(c) When the owner or operator of an EAF is required to demonstrate compliance with the standard under § 60.272 (a)(3) and at any other time the Administrator may require (under section 114 of the Act, as amended), the volu-

metric flow rate through each separately ducted hood shall be determined during all periods in which the hood is operated for the purpose of capturing emissions from the EAF using the monitoring device under paragraph (b) of this section. The owner or operator may petition the Administrator for reestablishment of these flow rates whenever the owner or operator can demonstrate to the Administrator's satisfaction that the EAF operating conditions upon which the flow rates were previously established are no longer applicable. The flow rates determined during the most recent demonstration of compliance shall be maintained (or may be exceeded) at the appropriate level for each applicable period. Operation at lower flow rates may be considered by the Administrator to be unacceptable operation and maintenance of the affected facility.

(d) The owner or operator may petition the Administrator to approve any alternative method that will provide a continuous record of operation of each emission capture system.

(e) Where emissions during any phase of the heat time are controlled by use of a direct shell evacuation system, the owner or operator shall install, calibrate, and maintain a monitoring device that continuously records the pressure in the free space inside the EAF. The pressure shall be recorded as 15-minute integrated averages. The monitoring device may be installed in any appropriate location in the EAF such that reproducible results will be obtained. The pressure monitoring device shall have an accuracy of ±5 mm of water gauge over its normal operating range and shall be calibrated according to the manufacturer's instructions.

(f) When the owner or operator of an EAF is required to demonstrate compliance with the standard under § 60.272 (a)(3) and at any other time the Administrator may require (under section 114 of the Act, as amended), the pressure in the free space inside the furnace shall be determined during the meltdown and refining period(s) using the monitoring device under paragraph (e) of this section. The owner or operator may petition the Administrator for reestablishment of the 15-minute integrated average pressure whenever the owner or operator can demonstrate to the Administrator's satisfaction that the EAF operating conditions upon which the pressures were previously established are no longer applicable. The pressure determined during the most recent demonstration of compliance shall be maintained at all times the EAF is operating in a meltdown and refining period. Operation at higher pressures may be considered by the Administrator to be unacceptable operation and maintenance of the affected facility.

(g) Where the capture system is designed and operated such that all emissions are captured and ducted to a control device, the owner or operator shall not be subject to the requirements of this section.

§ 60.275 Test methods and procedures.

(a) Reference methods in Appendix A of this part, except as provided under § 60.8(b), shall be used to determine compliance with the standards prescribed under § 60.272 as follows:

(1) Method 5 for concentration of particulate matter and associated moisture content;

(2) Method 1 for sample and velocity traverses;

(3) Method 2 for velocity and volumetric flow rate; and

(4) Method 3 for gas analysis.

(b) For Method 5, the sampling time for each run shall be at least four hours. When a single EAF is sampled, the sampling time for each run shall also include an integral number of heats. Shorter sampling times, when necessitated by process variables or other factors, may be approved by the Administrator. The minimum sample volume shall be 4.5 dscm (160 dscf).

(c) For the purpose of this subpart, the owner or operator shall conduct the demonstration of compliance with 60.272(a)(3) and furnish the Administrator a written report of the results of the test.

(d) During any performance test required under § 60.8 of this part, no gaseous diluents may be added to the effluent gas stream after the fabric in any pressurized fabric filter collector, unless the amount of dilution is separately determined and considered in the determination of emissions.

(e) When more than one control device serves the EAF(s) being tested, the concentration of particulate matter shall be determined using the following equation:

$$C_s = \frac{\sum_{n=1}^{N} (C_s Q_s)_n}{\sum_{n=1}^{N} (Q_s)_n}$$

where:

C_s = concentration of particulate matter in mg/dscm (gr/dscf) as determined by method 5.

N = total number of control devices tested.

Q_s = volumetric flow rate of the effluent gas stream in dscm/hr (dscf/hr) as determined by method 2.

$(C_s Q_s)_n$ or $(Q_s)_n$ = value of the applicable parameter for each control device tested.

(f) Any control device subject to the provisions of this subpart shall be designed and constructed to allow measurement of emissions using applicable test methods and procedures.

(g) Where emissions from any EAF(s) are combined with emissions from facilities not subject to the provisions of this subpart but controlled by a common capture system and control device, the owner or operator may use any of the following procedures during a performance test:

(1) Base compliance on control of the combined emissions.

(2) Utilize a method acceptable to the Administrator which compensates for the emissions from the facilities not subject to the provisions of this subpart.

(3) Any combination of the criteria of paragraphs (g)(1) and (g)(2) of this section.

(h) Where emissions from any EAF(s) are combined with emissions from facilities not subject to the provisions of this subpart, the owner or operator may use any of the following procedures for demonstrating compliance with § 60.272 (a)(3):

(1) Base compliance on control of the combined emissions.

(2) Shut down operation of facilities not subject to the provisions of this subpart.

(3) Any combination of the criteria of paragraphs (h)(1) and (h)(2) of this section.

* * * * *

(Secs. 111 and 114 of the Clean Air Act, as amended by sec. 4(a) of Pub. L. 91-604, 84 Stat. 1678 (42 U.S.C. 1857c-6, 1857c-9))

[FR Doc.75-25138 Filed 9-22-75;8:45 am]

APPENDIX B

METHOD 9 - VISUAL DETERMINATION OF THE OPACITY OF EMISSIONS FROM STATIONARY SOURCES

METHOD 9—VISUAL DETERMINATION OF THE OPACITY OF EMISSIONS FROM STATIONARY SOURCES

Many stationary sources discharge visible emissions into the atmosphere; these emissions are usually in the shape of a plume. This method involves the determination of plume opacity by qualified observers. The method includes procedures for the training and certification of observers, and procedures to be used in the field for determination of plume opacity. The appearance of a plume as viewed by an observer depends upon a number of variables, some of which may be controllable and some of which may not be controllable in the field. Variables which can be controlled to an extent to which they no longer exert a significant influence upon plume appearance include: Angle of the observer with respect to the plume; angle of the observer with respect to the sun; point of observation of attached and detached steam plume; and angle of the observer with respect to a plume emitted from a rectangular stack with a large length to width ratio. The method includes specific criteria applicable to these variables.

Other variables which may not be controllable in the field are luminescence and color contrast between the plume and the background against which the plume is viewed. These variables exert an influence upon the appearance of a plume as viewed by an observer, and can affect the ability of the observer to accurately assign opacity values to the observed plume. Studies of the theory of plume opacity and field studies have demonstrated that a plume is most visible and presents the greatest apparent opacity when viewed against a contrasting background. It follows from this, and is confirmed by field trials, that the opacity of a plume, viewed under conditions where a contrasting background is present can be assigned with the greatest degree of accuracy. However, the potential for a positive error is also the greatest when a plume is viewed under such contrasting conditions. Under conditions presenting a less contrasting background, the apparent opacity of a plume is less and approaches zero as the color and luminescence contrast decrease toward zero. As a result, significant negative bias and negative errors can be made when a plume is viewed under less contrasting conditions. A negative bias decreases rather than increases the possibility that a plant operator will be cited for a violation of opacity standards due to observer error.

Studies have been undertaken to determine the magnitude of positive errors which can be made by qualified observers while reading plumes under contrasting conditions and using the procedures set forth in this method. The results of these studies (field trials) which involve a total of 769 sets of 25 readings each are as follows:

(1) For black plumes (133 sets at a smoke generator), 100 percent of the sets were read with a positive error[1] of less than 7.5 percent opacity; 99 percent were read with a positive error of less than 5 percent opacity.

(2) For white plumes (170 sets at a smoke generator, 168 sets at a coal-fired power plant, 298 sets at a sulfuric acid plant), 90 percent of the sets were read with a positive error of less than 7.5 percent opacity; 95 percent were read with a positive error of less than 5 percent opacity.

The positive observational error associated with an average of twenty-five readings is therefore established. The accuracy of the method must be taken into account when determining possible violations of applicable opacity standards.

1. *Principle and applicability.*

1.1 Principle. The opacity of emissions from stationary sources is determined visually by a qualified observer.

1.2 Applicability. This method is applicable for the determination of the opacity of emissions from stationary sources pursuant to § 60.11(b) and for qualifying observers for visually determining opacity of emissions.

2. *Procedures.* The observer qualified in accordance with paragraph 3 of this method shall use the following procedures for visually determining the opacity of emissions:

---

[1] For a set, positive error=average opacity determined by observers' 25 observations—average opacity determined from transmissometer's 25 recordings.

2.1 Position. The qualified observer shall stand at a distance sufficient to provide a clear view of the emissions with the sun oriented in the 140° sector to his back. Consistent with maintaining the above requirement, the observer shall, as much as possible, make his observations from a position such that his line of vision is approximately perpendicular to the plume direction, and when observing opacity of emissions from rectangular outlets (e.g. roof monitors, open baghouses, noncircular stacks), approximately perpendicular to the longer axis of the outlet. The observer's line of sight should not include more than one plume at a time when multiple stacks are involved, and in any case the observer should make his observations with his line of sight perpendicular to the longer axis of such a set of multiple stacks (e.g. stub stacks on baghouses).

2.2 Field records. The observer shall record the name of the plant, emission location, type facility, observer's name and affiliation, and the date on a field data sheet (Figure 9–1). The time, estimated distance to the emission location, approximate wind direction, estimated wind speed, description of the sky condition (presence and color of clouds), and plume background are recorded on a field data sheet at the time opacity readings are initiated and completed.

2.3 Observations. Opacity observations shall be made at the point of greatest opacity in that portion of the plume where condensed water vapor is not present. The observer shall not look continuously at the plume, but instead shall observe the plume momentarily at 15-second intervals.

2.3.1 Attached steam plumes. When condensed water vapor is present within the plume as it emerges from the emission outlet, opacity observations shall be made beyond the point in the plume at which condensed water vapor is no longer visible. The observer shall record the approximate distance from the emission outlet to the point in the plume at which the observations are made.

2.3.2 Detached steam plume. When water vapor in the plume condenses and becomes visible at a distinct distance from the emission outlet, the opacity of emissions should be evaluated at the emission outlet prior to the condensation of water vapor and the formation of the steam plume.

2.4 Recording observations. Opacity observations shall be recorded to the nearest 5 percent at 15-second intervals on an observational record sheet. (See Figure 9–2 for an example.) A minimum of 24 observations shall be recorded. Each momentary observation recorded shall be deemed to represent the average opacity of emissions for a 15-second period.

2.5 Data Reduction. Opacity shall be determined as an average of 24 consecutive observations recorded at 15-second intervals. Divide the observations recorded on the record sheet into sets of 24 consecutive observations. A set is composed of any 24 consecutive observations. Sets need not be consecutive in time and in no case shall two sets overlap. For each set of 24 observations, calculate the average by summing the opacity of the 24 observations and dividing this sum by 24. If an applicable standard specifies an averaging time requiring more than 24 observations, calculate the average for all observations made during the specified time period. Record the average opacity on a record sheet. (See Figure 9–1 for an example.)

3. *Qualifications and testing.*

3.1 Certification requirements. To receive certification as a qualified observer, a candidate must be tested and demonstrate the ability to assign opacity readings in 5 percent increments to 25 different black plumes and 25 different white plumes, with an error not to exceed 15 percent opacity on any one reading and an average error not to exceed 7.5 percent opacity in each category. Candidates shall be tested according to the procedures described in paragraph 3.2. Smoke generators used pursuant to paragraph 3.2 shall be equipped with a smoke meter which meets the requirements of paragraph 3.3.

The certification shall be valid for a period of 6 months, at which time the qualification procedure must be repeated by any observer in order to retain certification.

3.2 Certification procedure. The certification test consists of showing the candidate a complete run of 50 plumes—25 black plumes and 25 white plumes—generated by a smoke generator. Plumes within each set of 25 black and 25 white runs shall be presented in random order. The candidate assigns an opacity value to each plume and records his observation on a suitable form. At the completion of each run of 50 readings, the score of the candidate is determined. If a candidate fails to qualify, the complete run of 50 readings must be repeated in any retest. The smoke test may be administered as part of a smoke school or training program, and may be preceded by training or familiarization runs of the smoke generator during which candidates are shown black and white plumes of known opacity.

3.3 Smoke generator specifications. Any smoke generator used for the purposes of paragraph 3.2 shall be equipped with a smoke meter installed to measure opacity across the diameter of the smoke generator stack. The smoke meter output shall display instack opacity based upon a pathlength equal to the stack exit diameter, on a full 0 to 100 percent chart recorder scale. The smoke meter optical design and performance shall meet the specifications shown in Table 9–1. The smoke meter shall be calibrated as prescribed in paragraph 3.3.1 prior to the conduct of each smoke reading test. At the completion of each test, the zero and span drift shall be checked and if the drift exceeds ±1 percent opacity, the condition shall be corrected prior to conducting any subsequent test runs. The smoke meter shall be demonstrated, at the time of installation, to meet the specifications listed in Table 9–1. This demonstration shall be repeated following any subsequent repair or replacement of the photocell or associated electronic circuitry including the chart recorder or output meter, or every 6 months, whichever occurs first.

TABLE 9–1—SMOKE METER DESIGN AND PERFORMANCE SPECIFICATIONS

Parameter:	*Specification*
a. Light source	Incandescent lamp operated at nominal rated voltage.

ameter:	*Specification*
Spectral response of photocell.	Photopic (daylight spectral response of the human eye—reference 4.3).
Angle of view----	15° maximum total angle.
Angle of projection.	15° maximum total angle.
Calibration error.	±3% opacity, maximum.
Zero and span drift.	±1% opacity, 30 minutes.
Response time---	≤5 seconds.

.3.1 Calibration. The smoke meter is ibrated after allowing a minimum of 30 nutes warmup by alternately producing ıulated opacity of 0 percent and 100 perıt. When stable response at 0 percent or ı percent is noted, the smoke meter is adted to produce an output of 0 percent or · percent, as appropriate. This calibration .ll be repeated until stable 0 percent and percent readings are produced without ustment. Simulated 0 percent and 100 cent opacity values may be produced by rnately switching the power to the light rce on and off while the smoke generator ;ot producing smoke.

.3.2 Smoke meter evaluation. The smoke .er design and performance are to be tuated as follows:

3.2.1 Light source. Verify from manu-.urer's data and from voltage measureıts made at the lamp, as installed, that lamp is operated within ±5 percent of nominal rated voltage.

3.3.2.2 Spectral response of photocell. Verify from manufacturer's data that the photocell has a photopic response; i.e., the spectral sensitivity of the cell shall closely approximate the standard spectral-luminosity curve for photopic vision which is referenced in (b) of Table 9-1.

3.3.2.3 Angle of view. Check construction geometry to ensure that the total angle of view of the smoke plume, as seen by the photocell, does not exceed 15°. The total angle of view may be calculated from: $\theta=2 \tan^{-1} d/2L$, where θ=total angle of view; d=the sum of the photocell diameter+the diameter of the limiting aperture; and L=the distance from the photocell to the limiting aperture. The limiting aperture is the point in the path between the photocell and the smoke plume where the angle of view is most restricted. In smoke generator smoke meters this is normally an orifice plate.

3.3.2.4 Angle of projection. Check construction geometry to ensure that the total angle of projection of the lamp on the smoke plume does not exceed 15°. The total angle of projection may be calculated from: $\theta=2 \tan^{-1} d/2L$, where θ= total angle of projection; d= the sum of the length of the lamp filament + the diameter of the limiting aperture; and L= the distance from the lamp to the limiting aperture.

3.3.2.5 Calibration error. Using neutral-density filters of known opacity, check the error between the actual response and the theoretical linear response of the smoke meter. This check is accomplished by first calibrating the smoke meter according to 3.3.1 and then inserting a series of three neutral-density filters of nominal opacity of 20, 50, and 75 percent in the smoke meter pathlength. Filters calibarted within ±2 percent shall be used. Care should be taken when inserting the filters to prevent stray light from affecting the meter. Make a total of five nonconsecutive readings for each filter. The maximum error on any one reading shall be 3 percent opacity.

3.3.2.6 Zero and span drift. Determine the zero and span drift by calibrating and operating the smoke generator in a normal manner over a 1-hour period. The drift is measured by checking the zero and span at the end of this period.

3.3.2.7 Response time. Determine the response time by producng the series of five simulated 0 percent and 100 percent opacity values and observing the time required to reach stable response. Opacity values of 0 percent and 100 percent may be simulated by alternately switching the power to the light source off and on while the smoke generator is not operating.

4. *References.*

4.1 Air Pollution Control District Rules and Regulations, Los Angeles County Air Pollution Control District, Regulation IV, Prohibitions, Rule 50.

4.2 Weisburd, Melvin I., Field Operations and Enforcement Manual for Air, U.S. Environmental Protection Agency, Research Triangle Park, N.C., APTD-1100, August 1972. pp. 4.1-4.36.

4.3 Condon, E. U., and Odishaw, H., Handbook of Physics, McGraw-Hill Co., N.Y., N.Y., 1958, Table 3.1, p. 6-52.

FIGURE 9-1
RECORD OF VISUAL DETERMINATION OF OPACITY

PAGE____of____

COMPANY_____
LOCATION_____
TEST NUMBER_____
DATE_____
TYPE FACILITY_____
CONTROL DEVICE_____

HOURS OF OBSERVATION_____
OBSERVER_____
OBSERVER CERTIFICATION DATE_____
OBSERVER AFFILIATION_____
POINT OF EMISSIONS_____
HEIGHT OF DISCHARGE POINT_____

	Initial			Final
CLOCK TIME				
OBSERVER LOCATION Distance to Discharge				
Direction from Discharge				
Height of Observation Point				
BACKGROUND DESCRIPTION				
WEATHER CONDITIONS Wind Direction				
Wind Speed				
Ambient Temperature				
SKY CONDITIONS (clear, overcast, % clouds, etc.)				
PLUME DESCRIPTION Color				
Distance Visible				
OTHER INFORMATION				

SUMMARY OF AVERAGE OPACITY

Set Number	Time	Opacity	
	Start--End	Sum	Average

Readings ranged from ____ to ____ % opacity

The source was/was not in compliance with ____ at the time evaluation was made.

FIGURE 9-2 OBSERVATION RECORD PAGE ___ OF ___

COMPANY _____ OBSERVER _____
LOCATION _____ TYPE FACILITY _____
TEST NUMBER _____ POINT OF EMISSIONS _____
DATE _____

Hr.	Min.	Seconds 0	15	30	45	STEAM PLUME (check if applicable) Attached	Detached	COMMENTS
	0							
	1							
	2							
	3							
	4							
	5							
	6							
	7							
	8							
	9							
	10							
	11							
	12							
	13							
	14							
	15							
	16							
	17							
	18							
	19							
	20							
	21							
	22							
	23							
	24							
	25							
	26							
	27							
	28							
	29							

FIGURE 9-2 OBSERVATION RECORD (Continued) PAGE ___ OF ___

COMPANY _____ OBSERVER _____
LOCATION _____ TYPE FACILITY _____
TEST NUMBER _____ POINT OF EMISSIONS _____
DATE _____

Hr.	Min.	Seconds 0	15	30	45	STEAM PLUME (check if applicable) Attached	Detached	COMMENTS
	30							
	31							
	32							
	33							
	34							
	35							
	36							
	37							
	38							
	39							
	40							
	41							
	42							
	43							
	44							
	45							
	46							
	47							
	48							
	49							
	50							
	51							
	52							
	53							
	54							
	55							
	56							
	57							
	58							
	59							

[FR Doc.74-26150 Filed 11-11-74;8:45 am]

TECHNICAL REPORT DATA
(Please read Instructions on the reverse before completing)

1. REPORT NO. EPA 340/1-77-007	2.	3. RECIPIENT'S ACCESSION NO.
4. TITLE AND SUBTITLE Steel Producing Electric Arc Furnaces (Inspection Manual for the Enforcement of New Source Performance Standards)		5. REPORT DATE May 1977
		6. PERFORMING ORGANIZATION CODE
7. AUTHOR(S) James Sahagian, Manuel Rei, Paul Fennelly		8. PERFORMING ORGANIZATION REPORT NO.
9. PERFORMING ORGANIZATION NAME AND ADDRESS GCA Corporation, GCA/Technology Division, Bedford, Massachusetts		10. PROGRAM ELEMENT NO.
		11. CONTRACT/GRANT NO. 68-01-3155
12. SPONSORING AGENCY NAME AND ADDRESS Division of Stationary Sourc Enforcment (EN-341), 401 M Street, S.W., Washington, D.C. 20460		13. TYPE OF REPORT AND PERIOD COVERED
		14. SPONSORING AGENCY CODE EPA - OE

15. SUPPLEMENTARY NOTES

One of a series of NSPS Enforcment Inspection Manuals

16. ABSTRACT

This document presents guidelines to enable enforcement personnel to determine whether new or modified EAF's in the steel production industry comply with New Source Performance Standards (NSPS). Key parameters identified during the performance test are used as a comparative base during subsequent inspections to determine the facility's compliance status. The electric arc process, atmospheric emissions from these processes, and emissions control methods are described. The inspection methods and types of records to be kept are discussed in detail.

17. KEY WORDS AND DOCUMENT ANALYSIS

a. DESCRIPTORS	b. IDENTIFIERS/OPEN ENDED TERMS	c. COSATI Field/Group
Electric Arc Furnaces Air Pollution Control Verification Inspection Performance Tests - Steel Making	New Source Performance Standards Enforcement Emission	13B 14D

18. DISTRIBUTION STATEMENT Release Unlimited	19. SECURITY CLASS *(This Report)* Unclassified	21. NO. OF PAGES 73
	20. SECURITY CLASS *(This page)* Unclassified	22. PRICE

EPA Form 2220-1 (9-73)