EPA-450/3-74-014
January 1974

REPORT ON THE STATUS OF LIME/LIMESTONE WET SCRUBBING SYSTEMS

U.S. ENVIRONMENTAL PROTECTION AGENCY
Office of Air and Water Programs
Office of Air Quality Planning and Standards
Research Triangle Park, North Carolina 27711

EPA-450/3-74-014

REPORT ON THE STATUS OF LIME/LIMESTONE WET SCRUBBING SYSTEMS

by

Radian Corporation
8500 Shoal Creek Boulevard
P. O. Box 9948
Austin, Texas 78766

Contract Number 68-02-0046

EPA Project Officer: Robert T. Walsh

Prepared for

ENVIRONMENTAL PROTECTION AGENCY
Office of Air and Water Programs
Office of Air Quality Planning and Standards
Research Triangle Park, N. C. 27711

January 1974

This report is issued by the Environmental Protection Agency to report technical data of interest to a limited number of readers. Copies are available free of charge to Federal employees, current contractors and grantees, and nonprofit organizations - as supplies permit - from the Air Pollution Technical Information Center, Environmental Protection Agency, Research Triangle Park, North Carolina 27711, or from the National Technical Information Service, 5285 Port Royal Road, Springfield, Virginia 22151.

This report was furnished to the Environmental Protection Agency by the Radian Corporation, Austin, Texas, in fulfillment of Contract No. 68-02-0046. The contents of this report are reproduced herein as received from the Radian Corporation. The opinions, findings, and conclusions expressed are those of the author and not necessarily those of the Environmental Protection Agency. Mention of company or product names is not to be considered as an endorsement by the Environmental Protection Agency.

Publication No. EPA-450/3-74-014

TABLE OF CONTENTS

		Page
1.0	SUMMARY	1
2.0	HISTORY OF COMMERCIALIZATION	3
	2.1 Introduction	3
	2.2 Initiation of Modern Development	4
	2.3 General Description of Current Lime and Limestone Wet Scrubbing Processes	6
	2.3.1 Principles of Operation	7
	2.3.2 Similarities Between the Process Types	7
	2.3.3 General Advantages and Disadvantages of Process Types	9
3.0	STATUS OF DEVELOPMENT IN LIME/LIMESTONE WET SCRUBBING	11
	3.1 Tabular Listing and Discussion of Current and Planned Commercial-Size Installations of Lime/Limestone Wet Scrubbing Processes	11
	3.2 Detailed Operating History of Selected Major Installations	13
	3.2.1 English Work	13
	3.2.2 Union Electric	14
	3.2.3 Kansas Power and Light	16
	3.2.4 Commonwealth Edison	18
	3.2.5 Mitsui Aluminum Company	19
	3.2.6 Louisville Gas and Electric	20
4.0	DISCUSSION OF THE SPECIFIC PROCESS PROBLEMS AND SOLUTIONS	21
	4.1 Scrubber and Pipe Plugging	22

TABLE OF CONTENTS (Cont.)

Page

4.2 Chemical Scaling. 24
4.3 Corrosion and Erosion 27
4.4 Demister/Reheater Operating Problems. . . . 29
4.5 Solids Disposal 33

5.0 COMMERCIAL OPERATING CONDITIONS OFFERED BY SUPPLIERS OF LIME/LIMESTONE WET SCRUBBING SYSTEMS. 34

BIBLIOGRAPHY

1.0 SUMMARY

Six years of development work by government and industry have resulted in lime/limestone scrubbing systems which control fly ash and sulfur oxide emissions from electric power generating stations. The systems represent new technology which is currently being reduced to sound engineering practice. When new technology is scaled up in first generation plants, difficult operating problems are nearly always encountered, a normal trend in chemical process development. As a result of such first generation operating problems, the reliability of lime/limestone scrubbing systems has been the subject of much concern. Most agree that reliability has not been demonstrated with finality.

A major field development program is now underway on a national scale. Equipment vendors and utilities are working in parallel with government agencies to increase the reliability of commercially available equipment. Numerous prototype and full scale installations are scheduled to be on line by 1975. These plants may have operating problems, and they will be more costly than those installed after the process design has become more sophisticated. But the experience gained from these systems will provide significant advances in the achievement of widespread commercial acceptance.

This paper addresses the problems of poor reliability which have caused some to be reluctant to accept what is now commercially available. The following discussion shows in detail how poor reliability has been the result of applications engineering problems with specific hardware components and design

parameters. The problems and their causes are clearly identified and solutions which have been proposed and implemented are described in detail and documented. Solutions to some problems have been adequate and others are marginally acceptable. One way of describing the problems is to divide them in two categories, one category of problems resulting from chemical causes and another category due to mechanical causes. The problems of chemical origin are now better understood. Methods of design and operation which prevent recurrence of these problems have been devised and in some instances demonstrated. The remaining mechanical problems are similar to those which have already been solved in other applications.

It is suggested that since many of the causes of poor reliability have been identified and since solutions have been proposed and some have been demonstrated, there is reason to be optimistic about acceptance and wide application of lime/limestone wet scrubbing in the near future. At present there are two systems (Mitsui and Paddy's Run) operating successfully with only minor problems. It is not to be expected that new installations will be trouble free. However, it is reasonable to expect that with operating experience and problem solving in present field installations along with the application of techniques which have been applied in other industries, lime/limestone wet scrubbing processes can be operated with reliability.

2.0 HISTORY OF COMMERCIALIZATION

2.1 Introduction

Some 40 years ago, workers in England initiated efforts to control SO_2 emissions from fossil-fueled combustion sources using a once-through water scrubber and a lime/limestone process installed on commercial-size boilers. The London Power Company did pilot plant work at their Battersea and Bankside units which led to full-scale gas-washing plants. The Howden-ICI process was used commercially at the Tir-John and Fulham power stations located in Swansea and London, respectively. Operation there was done on a closed loop basis. These processes proved successful in removing SO_2 and dust from stack gas and demonstrated process feasibility using primitive equipment. Process limitations such as highly acidic effluent, corrosion, erosion, plugging, and "drooping plume" became evident (SL-030) so that another result of this pioneering work was to define further development needs. Scrubbing systems at the Battersea and Bankside Plants, now associated with the Central Electricity Generating Board, are currently in operation.

Modern development began in the United States in 1967 with work sponsored both by government and industry. After six years, there are approximately twelve developers who have either operated or are planning to operate in the near future full scale installations of the lime/limestone wet scrubbing process. (Full scale in this case is arbitrarily defined as a unit with generating capacity of 100 MW or more.) A survey of the seven suppliers who already have full scale experience shows that most guarantee SO_2 removal in the 85 to 90% range (RA-074). There is virtually no restriction on sulfur content

of the fuel, whether coal or oil, and module designs as large as 150 MW, for units up to 800 MW, are offered.

It is expected that operating experience gathered by these and other suppliers at existing or planned installations will go a long way toward resolving the few operating problems which still characterize lime/limestone wet scrubbing systems. While work remains to be done involving optimization of the processing steps, demonstrated reliability and commercial acceptance are anticipated in the near future.

The purpose of this paper is to identify significant steps in the development of lime/limestone wet scrubbing processes, to indicate how past projects have contributed to progress through identification of operating problems, and finally to define current capabilities in designing efficient and reliable systems. The discussion which follows includes a chronological description of modern development (Section 2.2), a description of the commercial process which resulted, (Section 2.3), a survey of current installations which indicates the scope of on-going development work (Section 3.1), detailed operating histories of six selected major installations (Section 3.2) and a detailed discussion of specific operating problems, their causes, and their solutions (Section 4.0). The paper is concluded with a summary of process design and operating conditions currently offered by vendors on a commercial basis.

2.2 Initiation of Modern Development

Six or seven years ago none of the processes available for SO_2 control were considered capable of coping with the emissions from modern, high capacity power plants (HA-145). The

Division of Air Pollution of the U. S. Public Health Service (now part of the Environmental Protection Agency) therefore initiated a research and development program in this country to develop a technically and economically feasible method of curtailing sulfur oxide emissions. The early government program was intended to be stimulatory and was not directed solely toward limestone processes (nor is it now). Studies of the technical and economic feasibility of a wide range of potential SO_2 control processes were initiated. It was anticipated that limestone based processes would have considerable potential, and work was originally limited to dry processes to avoid duplication of industrial effort. Government support later expanded to include wet scrubbing processes and the Tennessee Valley Authority conducted support work under an interagency agreement investigating both wet and dry processes. Small scale studies using a 3,400 m^3/hr (2,000 ACFM) system at their Colbert Steam Plant in Muscle Shoals, Alabama, gave 80 to 90% SO_2 removal using a stoichiometric addition of 1.5 and a 10% slurry of pulverized limestone (TE-012). Data generated there formed the basis for TVA's present process concept. This developmental work is being continued at TVA's Shawnee station (30 MW), and results are being used in the design of the Widow's Creek (550 MW) installations.

Most of the early industrial work was performed with the limestone injection wet scrubbing process, notably by Combustion Engineering (C.E). Brief initial pilot scale testing at Detroit Edison showed the process to be successful in removing SO_2 from flue gas. These results prompted C.E. to install full scale units at Union Electric Company and Kansas Power and Light Company. The Union Electric Meramec No. 2 unit was started up in late 1968 and experienced operating problems including boiler pluggage, scaling, and low SO_2

removal efficiency. Numerous modifications failed to alleviate the most serious problems, and the unit was abandoned in 1972 after nearly four years of intermittent operations.

C.E.'s limestone injection systems on units number 4 and later number 5 at Kansas Power and Light's Lawrence Energy Center also served to identify numerous mechanical and operating problems. Substantial equipment modifications have been implemented in response to many of the major problems. Modified methods of scrubber operation have been identified and a schedule of frequent inspection and maintenance has been implemented. With these practices the scrubbing system has been available for operation when it is required during coal burning operations at the Lawrence Center (SU-023).

C.E.'s entrance into the market sparked interest among other parties in lime/limestone wet scrubbing. By the early 1970's commercial systems were being offered by eight additional vendors and efforts were underway to further develop the technology. Notable examples are B&W's Commonwealth Edison - Will County installation and Chemico's wet scrubbing system at Mitsui Aluminum Company. Some of the operating problems have been investigated and resolved at the pilot level. Process variations evolved and solutions to problems were incorporated into full scale designs. Combustion Engineering, after completing pilot plant work at their Kreisinger Development Laboratory in Windsor, Connecticut, has successfully installed a carbide sludge wet scrubbing system at Louisville Gas and Electric's Paddy's Run Station. As a result of these efforts, advances in scrubbing technology have been so rapid that most experts in the field today agree that lime and limestone wet scrubbing systems will be commercially accepted. Basic process components for systems currently being offered commercially

are described in the next section. The process description is presented as a basis for understanding the discussions which follow.

2.3 General Description of Current Lime and Limestone Wet Scrubbing Processes

In order to fully understand operating problems and solutions, the basic principles of the lime and limestone wet scrubbing processes must be studied. This discussion presents the principles of operation of each process, similarities between the two scrubbing schemes, and general advantages and disadvantages of each process.

2.3.1 Principles of Operation

The process flow arrangement for lime and limestone wet scrubbing is presented in Figure 2-1. Flue gas from the boiler enters a scrubber where it is contacted with an alkaline slurry (either lime or limestone). The SO_2 in the flue gas reacts with the dissolved lime or limestone to form calcium sulfite and calcium sulfate. The clean gas leaving the scrubber is passed through a demister and reheated before discharge to the atmosphere.

The slurry leaving the scrubber is sent to a hold tank where $CaSO_3 \cdot \frac{1}{2}H_2O$ and $CaSO_4 \cdot 2H_2O$ crystals are precipitated. Most of this slurry is recycled to the scrubber. A side stream of high percent solids from the hold tank is passed through a solid/liquid separator where the $CaSO_4 \cdot 2H_2O$ and $CaSO_3 \cdot \frac{1}{2}H_2O$, fly ash and undissolved limestone are removed and disposed of. The liquid from the separator is recycled to the scrubber after make-up water and fresh lime or limestone have been added.

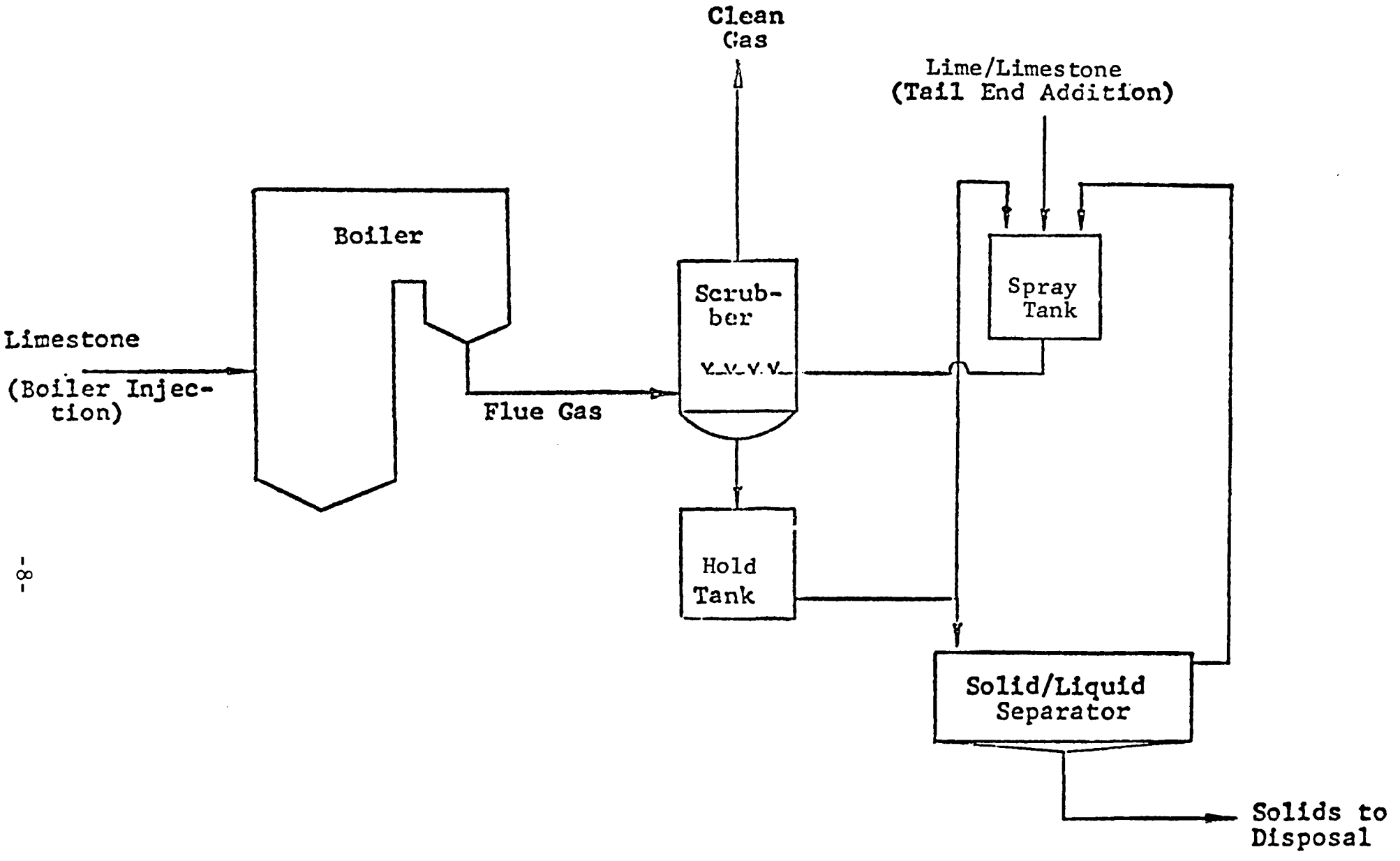

FIGURE 2-1 - GENERAL FLOW SCHEME FOR WET LIMESTONE/LIME PROCESSES

The limestone injection processes originally offered by Combustion Engineering involved direct addition of limestone into the boiler followed by wet scrubbing of the flue gas. The process currently marketed by the majority of vendors, lime/limestone tail end addition, involves addition of lime or limestone to the scrubber in the form of a slurry.

2.3.2 Similarities Between the Process Types

The lime and limestone scrubbing processes are basically very similar. The process chemistry is almost identical in both scrubbing schemes and both use essentially the same four basic pieces of equipment. One exception is the addition of a calciner to convert limestone to lime in the lime scrubbing process. Also, the same operational problems have been dealt with in both processes. These include plugging, scaling, demisting, and solids disposal.

2.3.3 General Advantages and Disadvantages of Process Types

There are several advantages and disadvantages for both the lime and limestone wet scrubbing processes. First, lime is generally more reactive than limestone for SO_2 absorption. This means that a given amount of SO_2 can be absorbed with a smaller amount of lime than with limestone.

Second, lime's lower molecular weight (44% less than limestone) helps reduce transportation costs. Costs for transporting raw materials such as lime and limestone are based on the tonnage shipped. Since the molecular weight of lime is less than that of limestone, a smaller tonnage of lime will be required, thus reducing the shipping costs.

Still another advantage of the lime scrubbing system is that less solids disposal is required. Due to the higher reactivity of lime, less remains unreacted. Thus, there are an estimated 16% less solids to be disposed of with the lime system than with the limestone system. For an ash free process, solids disposal requirements are estimated to be up to 30% less.

In some lime scrubbing systems a calciner is used to convert limestone to lime. An additional advantage of the limestone system is that this extra processing step is not required.

3.0 STATUS OF DEVELOPMENT IN LIME/LIMESTONE WET SCRUBBING

This section is designed to introduce the reader to operating problems and solutions which have been experienced by developers at major installations of the wet lime/limestone scrubbing processes. The discussion will illustrate the scope of ongoing development work. All current and planned commercial-size installations of lime/limestone wet scrubbing processes are listed in this section with discussions concerning developmental highlights. Also presented are synopses of the operating history of selected major installations including a discussion of factors which influence performance and reliability.

3.1 Tabular Listing and Discussion of Current and Planned Commercial-Size Installations of Lime/Limestone Wet Scrubbing Processes

For the purposes of this report, commercial-size installations are defined to be those with a flue gas rate equivalent to that from a boiler with a generating capacity of 100 MW or larger. A comprehensive listing of such installations is presented in Table 3-1.

Twelve of the systems listed in Table 3-1 will be in operation by early 1974, the time frame for meeting EPA primary new source standards.

Two installations of particular developmental interest are the vertical and horizontal scrubbing systems to be installed at SCE's Mohave Generating Station. These systems will be the first to treat flue gas from boilers firing low-sulfur Western coal. Scheduled start-up dates for these installations are late 1973 and mid-1974. Developments at these sites will help to

TABLE 3-1

OPERATING AND PLANNED COMMERCIAL-SIZE LIME/LIMESTONE WET SCRUBBING INSTALLATIONS IN THE UNITED STATES

Utility Company	Developer	Status (Start-Up Date)	Type and Size of Test Unit	New or Retrofit	Fuel Type	Absorbent	Station/Location
Kansas Power & Light	Combustion Engineering	Operating (Late 1968)	Coal-Fired, 125 MW	R	3.5% S Coal	CaO	Lawrence No. 4
Kansas Power & Light	Combustion Engineering	Operating (Late 1971)	Coal-Fired, 430 MW	N	3.5% S Coal	CaO	Lawrence No. 5
Commonwealth Edison	Babcock & Wilcox	Operating (Early 1972)	Coal-Fired, 156 MW	R	3.5% S Coal	$CaCO_3$	Will County No. 1
Kansas City Power & Light	Combustion Engineering	Operating (Late 1972)	Coal-Fired, 100 MW	R	3.5% S Coal	CaO	Hawthorne No. 3
Kansas City Power & Light	Combustion Engineering	Operating (Late 1972)	Coal-Fired, 100 MW	R	3.5% S Coal	$CaCO_3$	Hawthorne No. 4
Arizona Public Service	Research-Cottrell	Under Construction (Late 1973)	Coal-Fired, 115 MW	R	0.4-1% S Coal	$CaCO_3$	Cholla
Louisville Gas & Electric	Combustion Engineering	Operating (April 1973)	Coal-Fired 70 MW	R	3.0% S Coal	$Ca(OH)_2$	Paddy's Run No. 6
Duquesne Light	Chemico	Under Construction (Nov. 1973)	Coal-Fired, 100 MW	R	2.3% S Coal	CaO	Phillips
Kansas City Power & Light	Babcock & Wilcox	Operating (Mid 1973)	Coal-Fired, 820 MW	N	5.0% S Coal	$CaCO_3$	LaCygne
Detroit Edison	Peabody Engineering	Under Construction (Late 1973)	Coal-Fired 180 MW	R	2.5-4.5% S Coal	$CaCO_3$	St. Clair No. 6
Southern California Edison	SCE/Stearns-Roger	Under Construction (Late 1973)	Coal-Fired, 160 MW	R	0.5-0.8% S Coal	CaO	Mohave (Horizontal)
Southern California Edison	Procon/UOP/Bechtel	Under Construction (Early 1974)	Coal-Fired, 160 MW	R	0.5-0.8% S Coal	$CaCO_3$	Mohave (Vertical)
Ohio Edison	Chemico	Under Construction (Early 1975)	Coal-Fired, 1650 MW-total	N	4.3% S Coal	CaO	Mansfield (2 units)
TVA	TVA	Under Construction (Mid 1975)	Coal-Fired, 550 MW	R	3.7% S Coal	$CaCO_3$	Widow's Creek No. 8
Northern Indiana Public Service	Not Selected	Planning Stage (Mid 1975)	Coal-Fired, 500 MW	N	3.0% S Coal	Not Selected	Kanakee No. 14
Montana Power Company	Combustion Equipment Associates	Under Construction (May 1975)	Coal-Fired, 720 MW	N	0.8% S Coal	CaO/Fly Ash	Colstrip No. 1 and 2
Northern States Power (Minnesota)	Combustion Engineering	Under Construction (May 1976)	Coal-Fired, 1360 MW-total	N	0.8% S Coal	$CaCO_3$	Sherburn County No. and No. 2
Southern California Edison	Not Selected	Planning Stage (Late 1976)	Coal-Fired, 1500 MW-total	R	0.5-0.8% S Coal	$CaO/CaCO_3$	Mohave (Horiz/Vert)
Salt River Project/Southern California Edison	Not Selected	Construction Nov. 1974 (March 1976)	Coal-Fired; 2250 MW-total	N	0.5-0.8% S Coal	Not Selected	Navajo No. 1, 2, and 3
Public Service of Indiana	Combustion Engineering	Planning Stage (1976)	Coal-Fired, 650 MW	N	1.5% S Coal	$CaCO_3$	Gibson
Columbus & Southern	Not Selected	Planning Stage (1976)	Coal-Fired 750 MW	N		CaO	Conesville No. 5 and 6
Arizona Public Service	Not Selected	Construction Late 1975 (October 1976)	Coal-Fired 350 MW-total	R	0.75% S Coal	Not Selected	Four Corners No. 1 and 2
Arizona Public Service	Not Selected	Construction Mid 1976 (March 1977)	Coal-Fired 229 MW	R	0.75% S Coal	Not Selected	Four Corners No. 3
Arizona Public Service	Not Selected	Construction Sept. 1975 (April 1977)	Coal-Fired 1600 MW-total	R	0.75% S Coal	Not Selected	Four Corners No. 4 and 5

assess the technical and economic feasibility of flue gas desulfurization processes in conjunction with burning of low sulfur coal.

The last twelve installations listed in Table 3-1 are scheduled to start up after mid-1974. Operating experiences gained in the previous plants will be of value in selecting appropriate operating conditions for future installations. The hardware for plants based on today's technology may well have problems that will have to be solved in the field. The effort required to overcome these difficulties will be lessened because of the knowledge now being accumulated.

3.2 Detailed Operating History of Selected Major Installations

Several of the installations in Table 3-1 have already provided valuable operating experience with the lime/limestone wet scrubbing processes. A number of the operating problems to be discussed in detail in Section 4.0 can be put into proper historical perspective by surveying the operating histories of selected major installations. Discussion below begins with operating experience at the early English installations and proceeds to the latest experience in the U. S. and Japan.

3.2.1 English Work

The London Power Company did pilot plant work in the early 1930's that led to full scale gas-washing plants at the Battersea and Bankside power stations in London. Alkaline water equivalent to 200 ppm of NaOH from the Thames River was

used for scrubbing the gas on a once-through basis. At the top of the final scrubbing unit, the gases were contacted with a suspension of finely ground chalk ($CaCO_3$). During part of the program lime was added for pH control but addition of lime to the river water was said to cause scaling. The system removed about 90% of the flue gas SO_2 but acidic effluent from the two stations lowered the pH of the Thames to an undesirable level (TE-001). The once-through system also had the drawbacks of requiring a large amount of water (effluent was mixed 15 to 20 times its volume with condenser cooling water) and of cooling the gas to an unduly low temperature (KE-024). Units at both stations are presently operating successfully. Maintenance is performed during scheduled semiannual shutdowns, and unscheduled shutdowns are rare (DE-091).

The Howden-ICI tail-end wet scrubbing process was also being developed in England about this time. The process was used commercially at the Tir John and Fulham power stations located in Swansea and London, respectively. In these plants, lime, carbide lime, and finely ground chalk were tested. About 98% SO_2 and dust removal was achieved with stoichiometric addition of lime or 30% excess chalk. Scaling was controlled by circulating a high solids content slurry (up to 20 weight percent), holding the slurry in a delay tank for a period to allow dissipation of supersaturation, and use of "nonscaling" grid tower packing (suspended wooden plates). Serious corrosion and erosion problems were encountered in unlined mild steel pumps and washer tanks. Rubber linings were difficult to maintain at pipe bends and axial flow pumps (TE-001).

3.2.2 Union Electric

After initial testing of the limestone injection plus wet scrubbing process in 1966-67, Combustion Engineering installed a full scale unit at Union Electric Company (Meramec No. 2). The system was first operated in September 1968 and immediately experienced problems with boiler and gas scrubbing operations.

Injection of limestone into the Meramec No. 2 furnace resulted in pluggage of reheaters and severe deposition of lime reaction products in the convection pass of the furnace. Soot blowers were installed to improve the cleanliness of the reheaters. Attempts to remove deposits in the tubular air heater with blowers and washing proved unsuccessful. High pressure jet cleaning of the heat transfer surfaces was required in the fall of 1970 and again in 1971 after only 18 days of operation. Boiler operation problems at Meramec No. 2 were due in part to boiler design itself. Narrow spacing of heat transfer surfaces and a tubular air heater in the convection section tended to promote plugging by lime reaction products.

Operating problems with the scrubbing system included solids deposition at scrubber inlet and damper, severe scale formation in marble beds, and low SO_2 removal efficiency. Modified configuration of the scrubber inlet duct together with the installation of soot blowers successfully reduced solids deposition at the scrubber inlet and damper. Modifications to reduce scaling included installation of a reaction tank and a surge tank to provide holdup time for crystallization of calcium sulfite and sulfate and to provide better lime utilization. These modifications were unsuccessful in eliminating scale formation in the marble bed and drains.

The Meramec No. 2 system accumulated only 183 days of operation between September, 1968, and June, 1971 (MC-081). After four years of intermittent testing due to scrubber and boiler plugging problems, the mutual decision was reached by Union Electric and Combustion Engineering in 1972 to abandon the unit.

3.2.3 Kansas Power and Light

Initial installation at Kansas Power and Light Co.'s Unit No. 4 occurred in November of 1968. Immediately after start-up problems were encountered with duct vibration, plugging of marble bed and spray nozzles, and formation of ash cement at the scrubber inlet. Other operational problems experienced during the early stages of operation included corrosion, demister and reheater pluggage, and mechanical failure of pumps. To correct these problems, modifications were made which included sand blasting and glass epoxy lining of scrubber internals, installation of ladder vane distribution baffles and soot blowers, and redesigning the recycle system to accept dilution water from the pond. The system operated in this mode with fair success through the winter of 1970-71 and into the spring of 1971.

In the fall of 1971, the 430 MW No. 5 unit went on line, sharing the solids disposal pond with the No. 4 unit. With the additional flow of slurries supersaturated with respect to $CaSO_3 \cdot \frac{1}{2}H_2O$ and $CaSO_4 \cdot 2H_2O$ to the disposal pond, the recycle scrubber spray water early in 1972 became supersaturated with respect to calcium sulfate. The supersaturated spray water caused severe scaling in the scrubber train. Efforts to alleviate this problem took the form of the following measures:

(1) increased L/G ratio to the range of 2.7 to 3.4 liters/cubic meter (20 to 25 gal/1000 ACF),

(2) increased solids content of recycle slurry,

(3) enlarged marble bed and demister areas to lower the gas velocity,

(4) installed two additional scrubbers at Unit No. 5,

(5) increased liquid flow to Unit No. 4.

After these modifications, tests were conducted for two weeks in October, 1972. On the basis of results gathered during this period, KP&L management expects to obtain 75% SO_2 and 99+% particulate removal during long-term continuous operation (SU-023).

These changes have allowed Kansas Power and Light to operate without building scale deposits in the scrubbing system. Unfortunately, they have also caused other problems to worsen. With the high solids content in the slurry, they are now experiencing appreciably greater erosion of pumps and pipes. Kansas Power and Light engineers believe this is caused largely by fly ash in the recirculated slurry (there is no electrostatic precipitator in the system). In addition to erosion problems, the modifications have resulted in a greater tendency for solids to build up on demister surfaces. Mud-like material is washed off every other night during nightly load lessening. Also problems with unequal gas distribution in modules have been experienced with Unit No. 5. The latter boiler is normally derated about 25% when burning coal. This is partially due to scrubber related problems and partially due to increased

slagging in the boiler. Despite these difficulties, the scrubbing systems on both Units No. 4 and No. 5 have been operable whenever coal is burned in the boilers.

3.2.4 Commonwealth Edison

The most recent full scale work to be done on the limestone tail-end addition process has been conducted at the Babcock and Wilcox installation on Will County No. 1 (Commonwealth Edison Company). Numerous problems have been encountered since start-up in February, 1972: (1) serious carryover deposits in the demister, (2) plugging of slurry lines, (3) wearing and plugging of spray nozzles, and (4) significant scale deposits (GI-017). Demister pluggage appears controllable using automatic washing with make-up water via bottom sprays and other modifications. Plastic absorber slurry nozzles were replaced with stainless steel nozzles. Piping in the mill building was modified to prevent plugging. System reliability due to mechanical problems, economic disposal of sludge and scaling remain as major operating problems.

Two additional problems have been encountered recently at Will County No. 1 -- serious corrosion in reheaters and sulfite blinding of limestone. Stress corrosion has been a problem with the stainless steel reheaters located downstream from the absorbers. Attempts to alleviate this problem by replacing the stainless steel with corten steel have been unsuccessful due to attack of the corten steel by acid mist (GI-030).

Four instances of sulfite blinding have occurred since start-up of the unit; three since spring 1973. The phenomenon occurs in supersaturated solution and involves the rapid crystallization of calcium sulfite onto undissolved limestone particles

in the slurry. With limestone "blinded" by the sulfite crystals, dissolution of limestone cannot take place to provide the necessary alkalinity for SO_2 absorption. As a result, SO_2 absorption and the pH of the liquor drop sharply. Although specific preventative measures have not been taken at Will County (GI-030), it is reported that sulfite blinding is no longer a problem.

3.2.5 Mitsui Aluminum Company

Two dual-stage venturi scrubbing systems have been retrofitted to the 156 MW power plant of the Mitsui Aluminum Company in Japan. This system has demonstrated continuous, closed-loop operation since start-up in March 1972. The system is designed for total liquor recycle, and it has operated in a closed loop mode except for occasional periods of heavy rain during typhoon season when flooding and overflow of the disposal pond occurs.

The operational problems that have been reported at Mitsui have been minor ones. These have included piling up of particles in slurry tanks, erosion, damage to rubber pipe lining, and thin scale deposits. Problems involving piling up of carbon particles and erosion have been reduced by installing cyclone separators to remove carbon particles and foreign matter resulting from dry carbide sludge. Damage to rubber pipe lining was eliminated by substituting an orifice for a butterfly valve. Minor modification of mist eliminator sprays, proper pH control, and strategic utilization of fresh make-up water have served to eliminate scaling problems (SA-099). The scrubber has exhibited reliable performance and the system is guaranteed for installation in the United States by Chemico.

Although translation of Chemico's success in Japan to application in the United States may not be direct, there are some common features for the Mitsui plant and boilers which are typical for the U.S. They are: retrofit of existing coal-fired boiler, moderately efficient electrostatic precipitators, installation on moderately large size boiler, production of a throwaway product and availability of lime. Two similar units using lime on coal boilers are being constructed in the U.S. for Duquesne Light Company's Phillips Station and Ohio Edison's Bruce Mansfield Station.

3.2.6 Louisville Gas and Electric

Successful application of a Carbide Sludge ($Ca(OH_2)$) scrubbing system has been achieved in this country by Combustion Engineering at Louisville Gas and Electric Company's Paddy's Run Station. No scaling or plugging problems have been encountered in over 3000 hours of closed-loop operation since April 1973 (VA-068). The scrubbers have been available more than 95% of the time that the boiler has been available. Wash sludge is thickened, filtered, and disposed of as unfixed landfill. The system removes 85 to 95% of the SO_2 in the flue gas from a 70 MW boiler fired with 3.5 to 4.0 percent coal (VA-068).

4.0 DISCUSSION OF THE SPECIFIC PROCESS PROBLEMS AND SOLUTIONS

Operating problems discussed in the previous sections are in some cases peculiar to a specific design, vendor or installation. More often, however, they are a consequence of the basic process and mechanical design deficiencies common to all early versions of lime/limestone scrubbing processes. Because of this, significant progress has been made as more full scale experience has been logged. The rate of the improvement in process design and system reliability is accelerating with each new unit that is brought on line.

In this section specific operating problems are analyzed. The following points are of interest.

- What is the history of the problem; where did it first develop?
- Does the problem have a mechanical or chemical origin?
- What steps have been taken to solve the problem in various pilot and full scale installations; have proposed and attempted solutions been appropriate with respect to the origin of the problem?
- Are there pilot or full scale installations that have successfully overcome any of these specific design deficiencies? If not, when might such success be anticipated?

This approach to assessing the development of lime/limestone scrubbing technology eliminates much of the confusion that can develop when comparing the success or failure of different vendors' processes under different operating conditions.

Specific problems encountered at both early and more recent lime/limestone scrubbing installations are discussed below. The information presented here is intended to accurately demonstrate significant progress or lack of progress in each area.

4.1 Scrubber and Pipe Plugging

The term plugging is used to describe mechanical depositions of solid material on equipment surfaces. It is distinguished from scaling which is caused by chemical reaction on metal surfaces. Scaling is discussed in Section 4.2.

Plugging was experienced in the earliest full scale operations and to a lesser extent in recent installations. Combustion Engineering encountered massive buildup of lime and fly ash materials at the inlet of their marble bed scrubbers during operation at both Union Electric and Kansas Power and Light (SU-023). These deposits were sufficient to require unit shutdown on a day-to-day basis.

Scrubber inlet plugging is due to mechanical design problems. Contact between hot, dry lime and fly ash solids and partially wet scrubber inlet surface has been found to be undesirable. In the injection plus scrubbing process installed in the Meramec and Lawrence Stations, this contact cannot be avoided. Installation of high pressure blowers to scour the

scrubber proved to be a successful solution to inlet plugging. The equipment used for this cleaning service is the same as that used for maintaining clean surfaces in coal-fired boilers.

Scrubber inlet surfaces are accessible for in service cleaning. Process piping and scrubber spray nozzles can be cleaned in most cases only by shutting the system down. Combustion Engineering also experienced pipe and nozzle plugging at their Kansas Power and Light Lawrence No. 4 Unit. Large pieces of solid material were found lodged in the spray nozzles. This material was identified as scale that had broken off from other equipment surfaces. Screens were installed on the slurry pump inlets to prevent large pieces of solids from entering the nozzle.

In general, plugging problems in the slurry handling system have been avoided by proper equipment design. Plugging problems in the scrubber area have led many of the newer vendors to use scrubber types with less complicated internals. Of the vendors and developers now involved with lime/limestone scrubbing systems most use relatively simple open contacting devices. These include a two-stage venturi (Chemico), a single venturi followed by an open spray tower or grid tower (Babcock & Wilcox, Research-Cottrell, Combustion Equipment Associates, Tennessee Valley Authority), and an open spray tower alone (Southern California Edison, Joy Manufacturing Company, Peabody Engineering, Ontario Hydro). These scrubbers are expected to provide reliable service in slurry scrubbing applications. With the exception of mist eliminator problems which are discussed separately, plugging is no longer considered a serious obstacle to process reliability.

To avoid plugging of process piping, slurry velocities must be sufficient to keep solids from settling out. Deceleration and stagnation may occur at bends in piping and areas of roughness in the pipe. For these reasons, pipe bends should be made with large radii of curvature, valves other than gate valves should be avoided, smooth piping should be used, obstacles in the flow path (uneven pipe joints, unnecessary valves, probes) should be eliminated, and abrupt contractions or expansions in piping diameter should be avoided (BE-145).

4.2 Chemical Scaling

Scaling is caused by chemical deposition of calcium sulfite and sulfate solids on equipment surfaces. While the effect of scaling on equipment operation is the same as that of plugging, the causes and remedies of scaling are completely different.

When sulfur oxide is removed from the flue gas in the scrubber it enters the liquid portion of the circulating slurry. In order to dispose of the SO_2, however, it must be precipitated as insoluble calcium salts. The scaling phenomena are closely related to this precipitation step. A certain amount of time must be allowed for this step to be completed. This is usually termed delay time and is provided for in the scrubbing process by allowing the slurry to pass through a large stirred tank before being recirculated to the scrubber. If the slurry entering the scrubber has not been allowed to precipitate calcium salts, a portion of the SO_2 picked up during the previous pass to the scrubber and the newly absorbed SO_2 will tend to scale on the scrubber walls. In some cases scale deposits can force unit shutdown after a period of only one or two days.

More development and design effort has been spent on scale prevention than perhaps any other aspect of process reliability. Combustion Engineering encountered plugging and scaling throughout the first two years of operating at Lawrence No. 4 (SU-023). The earliest approach to scale prevention was a series of mechanical design changes. Materials used for some components of the scrubber were changed to prevent scale from adhering to their surfaces. The bottoms of the scrubbers at Lawrence No. 4 were covered with two inches of gunite and scrubber interiors were sand blasted and epoxy lined. Other mechanical type changes included modification of the recycle system and installation of soot blowers (SU-023). This experience showed, however, that scaling was primarily a chemical problem. Neither special materials nor periodic in-service washing was a successful solution.

During and following the Combustion Engineering experience at KP&L, vendors, including C.E., began to take a more fundamental approach to scale prevention. The rate at which the sulfite/sulfate solids precipitated in the system was known to increase with the amount of circulating solids. Combustion Engineering thus increased their designed solids concentration from less than 2 to 8 weight percent. More recently most vendors are designing high solids content systems. Design concentrations up to 15% have been reported (RA-074).

Along with increased solids content, C.E. has significantly increased the delay times for the spent slurry after it exits the scrubber. Tank sizes have been increased such that 15 minutes delay time is provided compared to five minutes in the original KP&L design.

Another significant design change intended to alleviate scaling problems is the change in the so-called "liquid-to-gas ratio" or L/G. This again resulted from basic consideration of process chemistry. The potential for scale to form in the scrubber is roughly proportional to the amount of SO_2 that is absorbed by the slurry. If a large amount is absorbed by only a small amount of slurry (i.e., L/G is low) then the capacity of the liquid to hold the sulfur compounds is exceeded and the excess forms an adherent scale on the surfaces of the scrubber. When the liquid-to-gas ratio is increased, more liquid is available to absorb a given amount of SO_2. The danger of exceeding the scaling point is greatly lessened. Most vendors now design their systems with L/G's far in excess of earlier experiences. C.E. has increased their own design from 1.4 liters of slurry per cubic meter of flue gas (10 gal/1000 ft^3) to 3.4-4 liters of slurry per cubic meter of flue gas (25-30 gal/1000 ft^3). Liquid-to-gas ratios now range as high as 13.5 liters/cubic meter (100 gallons/1000 ft^3) in some designs. While the operating costs for these high liquid rates are not negligible, increasing emphasis is being placed on system reliability.

These three key design changes for scale prevention — high solids concentration, long delay times, and high L/G — have been responsible for demonstrated success at new lime/limestone scrubbing installations. The Chemico unit at Mitsui Aluminum Company in Japan has a solids content of 3-5 weight percent and an L/G of 5.1 to 7.9 liters per cubic meter (46-59 gal/1000 ft^3) (AN-056). This unit has operated without scaling for more than a year (SU-031). The Paddy's Run Station at Louisville Gas and Electric is reported to have operated without scaling since April 1973 (VA-068). In summary, these results demonstrate that it is possible to design and operate new installations so that scaling does not occur.

4.3 Corrosion and Erosion

Surfaces in the wet scrubbing system that come in contact with wet SO_2 gas or acid scrubber liquor should be constructed of acid-resistant materials to minimize corrosion. Surfaces that come in contact with slurry solids should be constructed of abrasion-resistant materials to minimize erosion (RA-074). Materials selection for the limestone scrubbing systems has played an important part in system reliability. Early designs were based on sketchy information regarding the physical and chemical properties of circulating slurries. As a result, serious difficulties were encountered during long term full scale operation.

Material used in the original Combustion Engineering installation at KP&L's Lawrence No. 4 was principally unlined carbon steel. The scrubber shell suffered severe corrosion in the first year of operation before it was lined with glass flake epoxy. Other materials of this type being offered are the Ceilcote 100 and 200 series and Carboglass 1601 (RA-074). Materials now being used for scrubber shells and internals are usually stainless steel or lined carbon steels. Stainless steel 316L was being used for reheater requirements at Commonwealth Edison's Will County No. 1 Unit but suffered from stress corrosion (GI-030). This has been shown to be a problem in areas where chloride is present (RA-074). Stainless steel at Will County No. 1 was replaced with corten steel which suffered acid corrosion from mist eliminator carryover (GI-030). This problem can be eliminated with the correct choice of materials.

Experience with equipment erosion in lime/limestone scrubbing systems is less well defined. One of the disadvantages of using high solids concentration to avoid scaling is the abrasive effect of the solids on spray nozzles, pumps, and piping. Original spray nozzles at KP&L were made of plastic and erroded badly. Spray nozzles are now made of either rubber lined carbon steel or stainless steel.

Soft rubber or neoprene lined carbon steel can be effective for pump and piping material under abrasive conditions and temperature up to 175°F (RA-074). Rubber lined pumps have been used with fair success at a number of major installations (Will County, Mitsui, Paddy's Run, Shawnee). The most vulnerable pump parts are the impeller blades where a pinhole in the rubber lining can result in severe attack of the carbon steel underneath. Larger diameter pipes can be lined with rubber or neoprene. At both Mitsui Aluminum Co., and TVA's Shawnee Station, piping above 5 to 6.35 centimeters I.D. (2-2.5 inches) is carbon steel with internal neoprene lining (EL-030). Slurry piping smaller than 5 to 6.35 centimeter diameter (2-2.5 inches) is of stainless steel.

A less significant example of erosion in lime/limestone wet scrubbing installations occurs in marble beds and TCA scrubbers. Combustion Engineering noted weight loss of marbles in their scrubbers at both Union Electric and Kansas Power and Light (SU-023). At the TVA pilot plant installation at the Colbert Station, the polypropylene and polyethylene spheres in the TCA scrubber averaged 16% weight loss after 500 hours operation with 5% or 15% solids (SC-124). Some spheres lost mechanical strength, resulting in wall collapse. The glass marbles in the marble bed

scrubber at the TVA-EPA installation at Shawnee have also shown significant weight losses (EL-030).

4.4 Demister/Reheater Operating Problems

Three of the previously mentioned design and operating problems - plugging, scaling, and corrosion - have often occurred in connection with demister and reheater equipment. Since this experience is common to many of the full scale installations, it is treated separately in this section.

As described in Section 3, the demisters/reheaters are situated within the flue gas ductwork following the scrubber. The demister simply functions as a mechanical barrier to fine droplets of slurry which are carried out of the scrubber with the cleaned flue gas. Demister operating problems are a consequence of this basic dilemma. Efficient removal of entrained mist requires close spacing between the demister elements placed in the flue gas duct. This, however, makes the equipment subject to plugging and very difficult to wash.

Demister plugging and/or scaling has been encountered in many of the full scale scrubbing installations described in Section 4. Several design modifications have been used in working towards eliminating this problem. Combustion Engineering, for example, recognized that reduced gas velocity would aid in demister maintenance by lowering the amount of slurry carryover from the scrubber. Since the original start-up attempt at KP&L Lawrence No. 5, they have added extra scrubber modules so that the gas velocity through the system is reduced (SU-023).

Increased distance between the scrubber bed and demister is also desirable. This would be a difficult modification for an existing scrubbing system and has not been practiced at KP&L.

Some more recent designs such as TVA's Widow's Creek unit include demister elements in a horizontal section of duct following a vertical rise and 90 degree bend after the scrubber bed (MC-068). This arrangement is expected to have two major advantages over previous designs. First, the demister is physically remote from the scrubber bed. Dust, sludge or droplets of slurry will have less chance of contacting the demister. Secondly, in this situation, wash water used to clean the demister blades can be more effectively drained from the area.

One vendor, Joy Manufacturing Company, offers a system using a wet electrostatic precipitator following the scrubber. This equipment requires washing as do mechanical demisters but does not depend on close spacing or tortuous paths to separate the mist from the gas. Instead, the mist is removed by electrical charge as in the conventional electrostatic precipitator for dust control.

Mist eliminator plugging problems can probably be eliminated by more conservative design in general. A combination of lower gas velocity and more space between the scrubber and demister is probably most important to successful operation. Improved wash systems should also contribute to improved system reliability. Babcock and Wilcox experienced demister plugging problems at Commonwealth Edison's Will County Unit (GI-017). Along with other demister modifications, the washer nozzles were relocated below the demister baffles in order to facilitate more efficient washing. This appears to have controlled the demister pluggage problem (SU-031).

As described in Section 3 the flue gas reheater follows the demister in the scrubber exit duct work. The reheater designs proposed by developers and vendors have included four options:

a. heat transfer using a single exchanger with a once-through heat source,

b. heat transfer using a double exchanger and recirculating heat transfer medium (this option takes heat from the scrubber inlet gas and transfers it to the exit gas),

c. direct fired reheat using clean fuel such as distillate oil or natural gas, and

d. partial by-pass of hot flue gas around the scrubber.

e. reheat by direct addition of externally heated air.

Options a and b require heat exchange equipment in the duct work itself. This is most commonly a series of metal pipes with a hot fluid flowing through them. Option c does not require pipes in the duct work, but requires substantial quantities of expensive clean fuel such as distillate oil or natural gas. Option d can be used only where high SO_2 removal is not required. Option e does not involve equipment surfaces which can be fouled, does not offer a significant pressure drop and allows utilization of waste heat. It has the disadvantage of the added expense of an extra fan and oversized duct work and stack.

In the cases where heat exchangers are placed in the duct, any material passing through the demister may plug or scale the reheater surfaces. This problem is compounded by evaporation of mist containing high concentrations of dissolved salts as well as suspended solids. Heat exchangers are subject to the same difficulty as eliminators, since closed spacing of tubes is necessary for efficient operation. This makes plugging more difficult to avoid and complicates removal of deposits.

Early installations by Combustion Engineering at Kansas Power and Light used a water heat exchanger placed in the duct above the demister. Plugging, scaling, and corrosion were all experienced. These problems were reduced, however, by redesigning the demister and installing soot blowers to keep the reheaters clean (SU-023).

A bare tube steam heat exchanger with soot blowers was used by Babcock and Wilcox at Commonwealth Edison's Will County Unit No. 1. Some problems were encountered with vibration of the reheater tubes at higher gas flow rates (GI-017). Baffles were installed successfully to reduce noise and vibration of the reheater tubes.

Combustion of oil in direct fired burners has been used by TVA at their Shawnee Station for reheat. Poor combustion has resulted in unburned oil and soot deposits which ignited on two occasions (EL-030). Installation of mechanical atomizing nozzles and stainless steel sleeves has corrected the combustion problem and made the reheat system operable, but oil flow is restricted to a narrow range. Use of steam heat exchange is planned for TVA's commercial size installation at Widow's Creek.

The main disadvantages of options a and b are higher gas side pressure drop, greater investment, and possible fouling

of heat transfer surfaces. Unlike options c and d, however, they can interfere with boiler operation and thereby threaten system reliability.

In summary, reheat is a design problem that will be unique to each installation.

4.5 Solids Disposal

Disposal of solid wastes generated by lime/limestone wet scrubbing processes is currently receiving increased attention as other problems more critical to reliability are solved. In general, there are about 5 pounds of waste sludge (dry basis, ash free) generated for every pound of sulfur in burned coal. Likewise, there are about 3 pounds of fly ash generated per pound of sulfur in coal. Thus the total throwaway (sludge plus ash) requirement for scrubbing systems is about 2½ to 3 times the normal coal ash disposal rate (JO-083).

Sludge can be handled and disposed of without undue environmental effects using sound engineering practices. A number of methods are being used or investigated for use with limestone scrubbing plants now on-stream. Disposal cost will be an important operating expense.

5.0 COMMERCIAL OPERATING CONDITIONS OFFERED BY SUPPLIERS OF LIME/LIMESTONE WET SCRUBBING SYSTEMS

As mentioned earlier, there are currently twelve vendors offering lime/limestone wet scrubbing systems for commercial application. Seven of the twelve already have full scale experience. These suppliers have been surveyed to assess the range of operating conditions being offered with their systems. The results of this survey as presented by Raben (RA-074) can be summarized as follows:

- Contacting devices for SO_2 absorption include venturis, marble beds, quencher plus tray absorber spray columns, TCA, and inspirating scrubbers.

- Lime and limestone are the most common alkali materials but carbide sludge (impure slaked lime) has also been used successfully at two installations.

- Liquid-to-gas ratios range from 3.3 to 10.7 liters/cubic meters (25-80 gallons/1000 ft^3). Lowest L/G's are used for marble beds. Highest L/G's are common in spray columns. Venturi scrubbers generally use mid-range values. In general, L/G ratios are higher for limestone systems than they are for lime systems.

- Most systems can be designed for boilers firing 0.5 to 4.0% sulfur fuel. The one exception to this are systems supplied by Research-Cottrell which are presently offered only for low sulfur coal burning applications.

- Limestone stoichiometries vary between 1.1 and 1.5. Lime stoichiometries are slightly lower - between 0.8 and 1.3.

- The amount of solids circulating in slurry ranges from 5 to 15 weight percent with an average solids content near 10 weight percent.

- Hold tank residence times range from a low of 3 minutes to a high of 15 minutes.

Module designs as large as 150 MW each for up to 800 MW are provided by U. S. suppliers. With regard to construction lead times, from 24 to 36 months should be allowed between requests for bids and start-up of the system (RA-074, SU-031).

BIBLIOGRAPHY

AN-056 Ando, Jumpei, Recent Developments in Desulfurization of Fuel Oil and Waste Gas in Japan - 1973, EPA-R2-73-229, Cincinnati, Ohio, Processes Research, Inc., 1973.

BE-145 Berkowitz, Joan B., Evaluation of Problems Related to Scaling in Limestone Wet Scrubbing, EPA-R2-73-214, Final Report, Cambridge, Mass., Arthur D. Little, Inc., 1973.

DE-091 Dennett, M., Station Superintendent, Bankside Power Station, Central Electricity Generating Board, Letter of 21 May 1973 to John O. Copeland, U. S. EPA, Office of Air and Water Programs.

EL-030 Elder, H. W., et al., "Operability and Reliability of the EPA Lime/Limestone Scrubbing Test Facility", Presented at the Flue Gas Desulfurization Symposium, New Orleans, Louisiana, 14-17 May 1973.

GI-017 Gifford, D. C., "Will County Unit Limestone Wet Scrubber", Presented at the 2nd International Lime/Limestone Wet Scrubbing Symposium, New Orleans, Nov. 8-12, 1971.

GI-030 Gifford, D. C., Private Communication, 27 August 1973.

HA-145 Harrington, R. E., "Current Status of Sulfur Dixoide Control Technology", Int. J. Sulfur Chem. Pt. B 7(1), 57ff (1972).

JO-083 Jones, Julian W. and Richard D. Stern, "Waste Products from Throwaway Flue Gas Cleaning Processes — Ecologically Sound Treatment and Disposal", Presented at the Flue Gas Desulfurization Symposium, New Orleans, Louisiana, 14-17 May 1973.

KE-024 Kenneway, T., "The Fulham-Simon-Carves Process for the Recovery of Sulphur from Flue Gases", J. Air Poll. Control Assoc. 7(4), 266-74 (1957).

MC-068 McKinney, B. G., A. F. Little, and J. A. Hudson, The Widows Creek Limestone Scrubbing Facility. Pt. 1. Full Scale Facility", Presented at the Flue Gas Desulfurization Symposium, New Orleans, Louisiana, 14-17 May 1973.

MC-081 McLaughlin, J. F., Jr., "Sulfur Dioxide Scrubber Service Record. Union Electric Co. — Meramec Unit 2", Presented at the 2nd International Lime/ Limestone Wet Scrubbing Symposium, New Orleans, Louisiana, November 1971.

RA-074 Raben, I. A., "Status of Technology of Commercially Offered Lime and Limestone Flue Gas Desulfurization Systems", Presented at the Flue Gas Desulfurization Symposium, New Orleans, Louisiana, 14-17 May 1973.

SA-099 Sakanishi, Jun and R. H. Ouiq, "One Years Performance and Operability of the Chemico/Mitsui Carbide Sludge (Lime) Additive SO_2 Scrubbing System", Presented at the Flue Gas Desulfurization Symposium, New Orleans, Louisiana, 14-17 May 1973.

SC-124 Schultz, Jim, TVA, Private Communication, August 1973.

SL-030 Slack, A. V., "Removing SO_2 from Stack Gases", Env. Sci. Tech. 7(2), 110 (1973).

SU-023 Sulfur in Utility Fuels: The Growing Dilemma, Proceedings, Technical Conference, Chicago, Oct. 25-26, 1972, New York, McGraw-Hill, 1972.

SU-031 Sulfur Oxide Control Technology Assessment Panel (SOCTAP), Final Report on Projected Utilization of Stack Gas Cleaning Systems by Steam-Electric Plants, April 1973.

TE-001 Tennessee Valley Authority, Sulfur Oxide Removal from Power Plant Stack Gas: Conceptual Design and Cost Study, Use of Limestone in Wet Scrubbing Process, Prepared for NAPCA by TVA under Contract No. TV-29233A, Knoxville, Tenn., 1969.

TE-012 Tennessee Valley Authority, "Removal of Sulfur Oxides from Waste Gases: Limestone Slurry Scrubbing: Effect of Liquor: Gas Ratio and Temperature of Inlet Gas", November 1970, pp. 19-31.

VA-068 Van Ness, R. P., Manager, Environmental Affairs, Louisville Gas and Electric, Private Communication, 13 August 1973.

TECHNICAL REPORT DATA
(Please read Instructions on the reverse before completing)

1. REPORT NO. EPA-450/3-74-014	2.	3. RECIPIENT'S ACCESSION NO.
4. TITLE AND SUBTITLE Report on the Status of Lime/Limestone Wet Scrubbing Systems		5. REPORT DATE 30 January 1974
		6. PERFORMING ORGANIZATION CODE
7. AUTHOR(S) NA		8. PERFORMING ORGANIZATION REPORT NO.
9. PERFORMING ORGANIZATION NAME AND ADDRESS Radian Corporation 8500 Shoal Creek Boulevard P. O. Box 9948 Austin, Texas 78766		10. PROGRAM ELEMENT NO.
		11. CONTRACT/GRANT NO. No. 68-02-0046
12. SPONSORING AGENCY NAME AND ADDRESS U. S. Environmental Protection Agency Research Triangle Park, North Carolina 27711		13. TYPE OF REPORT AND PERIOD COVERED Final Report
		14. SPONSORING AGENCY CODE

15. SUPPLEMENTARY NOTES

16. ABSTRACT

The report presents results of a study of the status of lime and limestone wet scrubbing systems for the removal of sulfur dioxide from flue gases of fossil fuel-fired steam generators. The history of the systems, dating back 40 years, is reviewed. A general description of current lime and limestone wet scrubbing processes is given with a discussion of the similarities, advantages, and disadvantages of each process. Operating histories of several recent systems are presented noting the successes and problems of each unit. Solutions to problems of scrubber and pipe plugging, chemical scaling, corrosion and erosion, and demister and reheater operating problems are discussed.

17. KEY WORDS AND DOCUMENT ANALYSIS

a. DESCRIPTORS		b. IDENTIFIERS/OPEN ENDED TERMS	c. COSATI Field/Group
Air Pollution Chemical Reaction Desulfurization Design Sulfur Dioxide Limestone Coal	Sulfur Calcium Oxides Combustion Products Flue Gases	Air Pollution Control Electric Power Plants Boilers	13B

18. DISTRIBUTION STATEMENT Unlimited	19. SECURITY CLASS *(This Report)* Unclassified	21. NO. OF PAGES
	20. SECURITY CLASS *(This page)* Unclassified	22. PRICE

EPA Form 2220-1 (9-73)

INSTRUCTIONS

1. **REPORT NUMBER**
Insert the EPA report number as it appears on the cover of the publication.

2. **LEAVE BLANK**

3. **RECIPIENTS ACCESSION NUMBER**
Reserved for use by each report recipient.

4. **TITLE AND SUBTITLE**
Title should indicate clearly and briefly the subject coverage of the report, and be displayed prominently. Set subtitle, if used, in smaller type or otherwise subordinate it to main title. When a report is prepared in more than one volume, repeat the primary title, add volume number and include subtitle for the specific title.

5. **REPORT DATE**
Each report shall carry a date indicating at least month and year. Indicate the basis on which it was selected *(e.g., date of issue, date of approvcl, date of preparation, etc.)*.

6. **PERFORMING ORGANIZATION CODE**
Leave blank.

7. **AUTHOR(S)**
Give name(s) in conventional order *(John R. Doe, J. Robert Doe, etc.)*. List author's affiliation if it differs from the performing organization.

8. **PERFORMING ORGANIZATION REPORT NUMBER**
Insert if performing organization wishes to assign this number.

9. **PERFORMING ORGANIZATION NAME AND ADDRESS**
Give name, street, city, state, and ZIP code. List no more than two levels of an organizational hirearchy.

10. **PROGRAM ELEMENT NUMBER**
Use the program element number under which the report was prepared. Subordinate numbers may be included in parentheses.

11. **CONTRACT/GRANT NUMBER**
Insert contract or grant number under which report was prepared.

12. **SPONSORING AGENCY NAME AND ADDRESS**
Include ZIP code.

13. **TYPE OF REPORT AND PERIOD COVERED**
Indicate interim final, etc., and if applicable, dates covered.

14. **SPONSORING AGENCY CODE**
Leave blank.

15. **SUPPLEMENTARY NOTES**
Enter information not included elsewhere but useful, such as: Prepared in cooperation with, Translation of, Presented at conference of, To be published in, Supersedes, Supplements, etc.

16. **ABSTRACT**
Include a brief *(200 words or less)* factual summary of the most significant information contained in the report. If the report contains a significant bibliography or literature survey, mention it here.

17. **KEY WORDS AND DOCUMENT ANALYSIS**
(a) DESCRIPTORS - Select from the Thesaurus of Engineering and Scientific Terms the proper authorized terms that identify the major concept of the research and are sufficiently specific and precise to be used as index entries for cataloging.

(b) IDENTIFIERS AND OPEN-ENDED TERMS - Use identifiers for project names, code names, equipment designators, etc. Use open-ended terms written in descriptor form for those subjects for which no descriptor exists.

(c) COSATI FIELD GROUP - Field and group assignments are to be taken from the 1965 COSATI Subject Category List. Since the majority of documents are multidisciplinary in nature, the Primary Field/Group assignment(s) will be specific discipline, area of human endeavor, or type of physical object. The application(s) will be cross-referenced with secondary Field/Group assignments that will follow the primary posting(s).

18. **DISTRIBUTION STATEMENT**
Denote releasability to the public or limitation for reasons other than security for example "Release Unlimited." Cite any availability to the public, with address and price.

19. & 20. **SECURITY CLASSIFICATION**
DO NOT submit classified reports to the National Technical Information service.

21. **NUMBER OF PAGES**
Insert the total number of pages, including this one and unnumbered pages, but exclude distribution list, if any.

22. **PRICE**
Insert the price set by the National Technical Information Service or the Government Printing Office, if known.