EPA-450/3-75-028

March 1974

EMISSIONS FROM PROCESSES PRODUCING CLEAN FUELS

U.S. ENVIRONMENTAL PROTECTION AGENCY
Office of Air and Waste Management
Office of Air Quality Planning and Standards
Research Triangle Park, North Carolina 27711

EPA-450/3-75-028

EMISSIONS FROM PROCESSES PRODUCING CLEAN FUELS

by

F. Glazer, A. Hershaft, and R. Shaw

Booz-Allen and Hamilton Inc.
4733 Bethesda Avenue
Bethesda, Maryland 20014

Contract No. 68-02-1358

EPA Project Officer: William Herring

Prepared for

ENVIRONMENTAL PROTECTION AGENCY
Office of Air and Waste Management
Office of Air Quality Planning and Standards
Research Triangle Park, North Carolina 27711

March 1974

NOTICE

This document includes technical information and recommendations submitted by the Contractor to the United States Environmental Protection Agency (EPA) regarding the subject industry. The report, including the recommendations, will be undergoing extensive review by EPA, Federal and State agencies, public interest organizations, and other interested groups and persons. The report and in particular the Contractor's recommended standards of performance are subject to change in any and all respects. Mention of company or product names is not to be considered as an endorsement by the Environmental Protection Agency.

The regulations to be published by EPA under Section 111 of the Clean Air Act of 1970 will be based to a large extent on the report and the comments received on it. However, EPA will also consider additional pertinent technical and economic information which is developed in the course of review of this report by the public and within EPA. Upon completion of the review process, and prior to final promulgation of regulations, an EPA report will be issued setting forth EPA's conclusions concerning the subject industry and standards of performance for new stationary sources applicable to such industry. Judgments necessary to promulgation of regulations under Section 111 of the Act, of course, remain the responsibility of EPA. Subject to these limitations, EPA is making this report available in order to encourage the widest possible participation of interested persons in the decision-making process at the earliest possible time.

This report shall have standing in any EPA proceeding or court proceeding only to the extent that it represents the views of the Contractor who studied the subject industry and prepared the information and recommendations. It cannot be cited, referenced, or represented in any respect in any such proceedings as a statement of EPA's views regarding the subject industry.

This report is issued by the Environmental Protection Agency to report technical data of interest to a limited number of readers. Copies are available free of charge to Federal employees, current contractors and grantees, and nonprofit organizations - as supplies permit - from the Air Pollution Technical Information Center, Environmental Protection Agency, Research Triangle Park, North Carolina 27711; or, for a fee, from the National Technical Information Service, 5285 Port Royal Road, Springfield, Virginia 22161.

Publication No. EPA-450/3-75-028

TABLE OF CONTENTS

	Page Number
SECTION 1	
I. INTRODUCTION	I-1
II. SUMMARY OF ANALYSIS METHODOLOGY	II-1
III. DISCUSSION OF SELECTED TOPICS COMMON TO ALL PROCESS DESCRIPTIONS	III-1
SECTION 2	
IV. THE SYNTHANE PROCESS	IV-1
V. THE CO_2 ACCEPTOR PROCESS	V-1
VI. THE LURGI PROCESS	VI-1
VII. THE HYGAS PROCESS	VII-1
VIII. THE COED PROCESS	VIII-1
IX. THE SOLVENT REFINED COAL (SRC) PROCESS	IX-1
X. THE TEXACO PARTIAL OXIDATION PROCESS	X-1

		Page Number
XI.	THE DESULFURIZATION OF CRUDE OIL	XI-1
XII.	THE GAS COMBUSTION RETORT PROCESS	XII-1
XIII.	THE LURGI PROCESS	XIII-1
XIV.	THE U-GAS PROCESS	XIV-1
XV.	THE KOPPERS-TOTZEK PROCESS	XV-1
XVI.	BIBLIOGRAPHY	XVI-1

INDEX OF FIGURES

		Page Number
III-1	Two-Stage Acid-Gas Treatment With Sulfur Recovery as Applied in the Synthane Process	III-56
III-2	Two-Stage Acid-Gas Treatment as Applied in the Lurgi Process	III-57
III-3	Selective Acid-Gas Treatment with Claus-Type Sulfur Recovery As Applied in the Texaco and Hygas Processes	III-59
III-4	Format for Calculating Incremental Capital Investment	III-62
III-5	Format for Calculating Incremental Annual Operating Cost	III-63
III-6	Derivation of DCF Equation for Incremental Price of Clean Fuel	III-67
III-7	Derivation of Utility Financing Equation For Incremental Cost of Fuel	III-68
IV-1	The Synthane Process	IV-3
IV-2	Incremental Cost of Gas	IV-21
V-1	CO_2 Acceptor Process Flow Sheet	V-3
VI-1	The Lurgi Process	VI-3

		Page Number
VII-1	The Hygas Process—Montana Subbituminous	VII-3
VII-2	The Hygas Process—Illinous No. 6 Coal	VII-4
VIII-1	The COED Process—Utah A Seam Coal	VIII-3
VIII-2	The COED Process—Illinois No. 6 Coal	VIII-4
IX-1	The Solvent Refined Coal Process	IX-2
X-1	The Texaco Process Synthetic Gas Production	X-3
X-2	The Texaco Process Hydrogen Production	X-4
XI-1, Case 1	Desulfurization of Crude Oil	XI-3
XI-1, Case 2	Desulfurization of Crude Oil	XI-4
XI-1, Case 3	Desulfurization of Crude Oil	XI-5
XI-1, Case 3A	Desulfurization of Crude Oil	XI-6
XI-1, Case 4	Desulfurization of Crude Oil	XI-7
XI-2	Typical Flow Scheme for a Fixed Bed Hydrodesulfurization Process	XI-12
XI-3	Typical Natural Gas Reforming Process	XI-14

		Page Number
XI-4	Percent of Crude Oil Desulfurized for Reduced Sulfur in Desulfurized Oil, 100,000 BPD Crude Oil, 1.7 Percent Sulfur	XI-22
XI-5	Capital Investment for Sulfur Reduction for 100,000 BPD Crude Oil, 1.7 Percent Sulfur	XI-32
XI-6	Cost of Sulfur Reduction for 100,000 BPD Crude Oil, 1.7 Percent Sulfur	XI-35
XII-1	The Gas Combustion Retort Process	XII-3
XIII-1	The Lurgi Process (Airblown Gasifier)	XIII-3
XIV-1	The U-Gas Process—Combined Cycle Case	XIV-2
XIV-2	The U-Gas Process—Fuel Gas Case	XIV-4
XV-1	The Koppers-Totzek Process	XV-2

INDEX OF TABLES

		Page Number
I-1	Summary of Selected Wastewater Treatment, Sulfur Removal and Sulfur Recovery Processes	I-6
I-2	Summary of Costs for Pollution Control	I-9
I-3	Synthetic Fuel Plants Recommended for Project Independence	I-12
II-1	Coal to Gas Conversion	II-4
II-2	Conversion of Coal to Coal or Oil	II-6
II-3	Conversion of Lightweight Oil to Gas	II-8
II-4	Conversion of Middleweight Oil to Gas	II-9
II-5	Conversion of Heavyweight Oil (and Tar) to Gas	II-10
II-6	Oil to Oil Conversion	II-11
II-7	Conversion of Oil-Bearing Minerals (Tar-Sands, Oil Shale) to Syn-Crude	II-12
II-8	Conversion of Oil Shale to Gas	II-13
II-9	Selection of Clean-Fuel Processes for Detailed Study	II-15
II-10	Nature and Emissions of Major Sources of Pollutants	II-17
II-11	Units Used in Process Display	II-21

		Page Number
III-1	Nature and Sources of Major Waste Streams	III-3
III-2	Composition of Selected Gaseous Waste Streams (Vol. Percent)	III-6
III-3	Composition of Selected Liquid Waste Streams (mg/1)	III-7
III-4	Composition of Selected Solid Waste Streams (wt. percent)	III-8
III-5	Sulfur Distribution Among Outputs of Clean-Fuel Processes (Weight Percent of Feedstock)	III-11
III-6	Distribution of Energy in Clean-Fuel Products (Percent of Feedstock Energy)	III-13
III-7	Comparison of 250 Billion Btu/day Gas From Coal with 3000 MW Electricity from Coal	III-14
III-8	Solvent-Based Process	III-39
III-9	Amine Processes	III-43
III-10	Indirect Oxidation Processes	III-45
IV-1	Sulfur Compounds in Scrubber Effluent Gas	IV-5
IV-2	Composition of Wastewater From Gasifier	IV-5
IV-3	Energy Balance Calculations	IV-9
IV-4	Sulfur Balance - Short Tons/Hr (m Tons/Hr)	IV-9
IV-5	Nature and Treatment of Major Waste Streams	IV-10

		Page Number
IV-6	Incremental Capital Investment ($ Million)	IV-17
IV-7	Incremental Annual Operating Cost ($)	IV-18
IV-8	Incremental Cost of Gas Due to Pollution Control for the Synthane Process	IV-20
V-1	Compositions of Gaseous Streams	V-2
V-2	Solids Analysis	V-4
V-3	Energy Balance Calculations	V-11
V-4	Sulfur Balance	V-12
V-5	Source and Treatment of Major Waste Streams	V-13
V-6	Incremental Capital Investment ($ Million)	V-18
V-7	Incremental Annual Operating Cost ($)	V-19
V-8	Incremental Cost of Gas Due to Pollution Control for the CO_2 Acceptor Process	V-20
VI-1	Stream Composition	VI-4
VI-2	Component Analysis (Dry Coal)	VI-5
VI-3	Low-Btu Fuel Gas Composition	VI-11
VI-4	Composition and Quantity of Steam and Power Generation Effluents to the Atmosphere	VI-11
VI-5	Energy Balance Calculations	VI-13
VI-6	Sulfur Balance	VI-14

		Page Number
VI-7	Nature and Treatment of Major Waste Streams	VI-15
VI-8	Sulfur Compounds Vented to Atmosphere from Stretford Units	VI-16
VI-9	Incremental Capital Investment ($ Million)	VI-21
VI-10	Incremental Annual Operating Cost ($)	VI-22
VI-11	Incremental Cost of Gas	VI-23
VII-1	Component Analysis (Dry Coal)	VII-5
VII-2	Montana Coal Stream Compositions	VII-7
VII-3	Illinois Coal Stream Compositions	VII-10
VII-4	Energy Balance	VII-18
VII-5	Sulfur Balance	VII-18
VII-6	Source and Treatment of Major Waste Streams	VII-19
VII-7	Hygas Plant With Montana Subbituminous Coal Feed, Incremental Capital Costs	VII-27
VII-8	Hygas—Illinois No. 6 Coal, Incremental Capital Costs	VII-28
VII-9	Hygas—Montana Subbituminous Coal, Incremental Annual Operating Costs	VII-29
VII-10	Hygas—Illinois No. 6 Coal, Incremental Annual Operating Costs	VII-30
VII-11	Incremental Cost of Gas Due to Pollution Control for the Hygas Process	VII-32

		Page Number
VIII-1	COED Feedstocks and Products	VIII-2
VIII-2	Energy Balance Calculations	VIII-10
VIII-3	Sulfur Balance	VIII-11
VIII-4	Nature and Treatment of Major Waste Streams	VIII-12
VIII-5	Incremental Capital Investment ($ Million)	VIII-17
VIII-6	Incremental Annual Operating Cost ($)	VIII-18
VIII-7	Incremental Cost of Clean Fuel Due to Pollution Control for the COED Process	VIII-20
IX-1	Composition of Gaseous Streams	IX-3
IX-2	Composition of Liquid Streams	IX-4
IX-3	Composition of Solids Streams	IX-5
IX-4	Component Analysis for Coal Feedstock	IX-6
IX-5	Energy Balance Calculations	IX-8
IX-6	Sulfur Balance for the SRC Process	IX-15
IX-7	Source and Treatment of Major Waste Streams	IX-16
IX-8	Incremental Capital Investment ($ Million)	IX-21
IX-9	Incremental Annual Operating Costs ($)	IX-22
IX-10	Incremental Cost of Solvent Refined Coal Product (SRC) Due to Pollution Control	IX-24

		Page Number
X-1	Sulfur Balance, Short Tons/Hr (Metric Tons/Hr)	X-5
X-2	Energy Balance	X-6
X-3	Nature and Treatment of Major Waste Streams	X-10
X-4	Incremental Capital Investment ($ Million) For Synthesis Gas Production (For 6.2% Sulfur in Residual Oil Feedstock)	X-13
X-5	Incremental Capital Investment ($ Million) For Hydrogen Production (For 6.2% Sulfur in Residual Oil Feedstock)	X-14
X-6	Incremental Annual Operating Costs of Synthesis Gas Production	X-15
X-7	Incremental Annual Operating Costs of Hydrogen Production	X-16
X-8	Incremental Cost of Synthesis Gas Production Due to Pollution Control (6.2% Sulfur in Residual Oil Feedstock)	X-18
X-9	Incremental Cost of Hydrogen Production Due to Pollution Control (6.2% Sulfur in Residual Oil Feedstock)	X-18
XI-1	Important Hydrodesulfurization Processes	XI-10
XI-2	Hydrogen Plant Requirements and Production Rates	XI-15
XI-3	Steam Balance, Fuel and Power Requirements	XI-20

		Page Number
XI-4	Fuel Gas Production, FOE barrels/day	XI-25
XI-5	Expected Water Requirements	XI-26
XI-6	Spent Catalyst, lb/day (kg/day)	XI-29
XI-7	Incremental Capital Investment ($ Million)	XI-30
XI-8	Incremental Annual Operating Cost ($)	XI-33
XI-9	Summary of HDS Capital Costs	XI-34
XI-10	Summary of HDS Operating Costs	XI-34
XI-11	Incremental Cost of Desulfurizing Crude Oil	XI-36
XII-1	Oil Shale Component Analysis	XII-4
XII-2	Energy Balance Calculations for the Gas Combustion Retort Process	XII-6
XII-3	Sulfur Balance for the Gas Combustion Retort Process	XII-10
XII-4	Nature and Treatment of Major Waste Streams	XII-11
XII-5	Untreated and Treated Wastewater	XII-13
XII-6	Incremental Capital Investment	XII-17
XII-7	Incremental Annual Operating Cost	XII-18
XII-8	Incremental Cost of Oil Due to Pollution Control for the Gas Combustion Retort Process	XII-19

		Page Number
XIII-1	Stream Composition	XIII-4
XIII-2	Component Analysis (Dry Coal)	XIII-5
XIII-3	Energy Balance	XIII-6
XIII-4	Sulfur Balance (29.7×10^9 kcal/day Plant - Net) (117.7×10^9 Btu/day)	XIII-11
XIII-5	Wastes, Their Amounts, Sources, and Treatment for a Coal to Low-Btu Fuel Gas Plant	XIII-13
XIII-6	Incremental Capital Investment ($1000) (117.7 Billion Btu/Day Net Plant)	XIII-17
XIII-7	Incremental Annual Operating Cost ($) (117.7 Billion Btu/day Net), 90% Stream Factor)	XIII-18
XIII-8	Incremental Cost of Gas (117.7 Billion Btu/Day (Net) Plant)	XIII-19
XIV-1	Stream Composition —Combined Cycle Case	XIV-5
XIV-2	Stream Composition—Fuel Gas Case	XIV-6
XIV-3	Component Analysis (Dry Coal)	XIV-7
XIV-4	Energy Balance Calculations, Combined Cycle Case	XIV-13
XIV-5	Combined Cycle Case, Sulfur Balance	XIV-14
XIV-6	Energy Balance Calculations, Fuel Gas Case	XIV-16

		Page Number
XIV-7	Fuel Gas Case, Sulfur Balance	XIV-17
XIV-8	Source and Treatment of Major Waste Streams for U-Gas Process—Combined Cycle Case (Airblown Gasifier)	XIV-18
XIV-9	Source and Treatment of Major Waste Streams for U-Gas Process—Fuel Gas Case (Oxygen-Blown Gasifier)	XIV-22
XIV-10	Incremental Capital Cost for Pollution Abatement for Combined-Cycle Facility Using Airblown U-Gas Process	XIV-24
XIV-11	Incremental Operating Costs for Pollution Abatement for Combined-Cycle Facility Using Airblown U-Gas Process	XIV-25
XIV-12	Incremental Capital Cost for Pollution Abatement for Fuel Gas Plant Based on U-Gas Process (Oxygen-Blown Gasifier)	XIV-26
XIV-13	Incremental Operating Costs for Pollution Abatement for Fuel Gas Plant Based on U-Gas Process (Oxygen-Blown Gasifier)	XIV-27
XIV-14	Incremental Cost of Gas ($/$10^6$ Btu)	XIV-28
XV-1	Stream Compositions, Illinois Coal	XV-3
XV-2	Stream Compositions, Eastern Coal	XV-4
XV-3	Stream Compositions, Western Coal	XV-5
XV-4	Coal Composition and Heating Values	XV-6
XV-5	Energy Balances for Various Coal Feeds	XV-12

		Page Number
XV-6	Sulfur Balances	XV-13
XV-7	Nature and Treatment of Major Waste Streams	XV-14
XV-8	Koppers Coal Gasification Water Analyses, Kutahya, Turkey	XV-17
XV-9a	Incremental Capital Cost for Pollution Abatement for Koppers-Totzek Process Using Illinois Coal	XV-19
XV-9b	Incremental Operating Costs for Pollution Abatement for Koppers-Totzek Process Using Illinois Coal	XV-20
XV-10a	Incremental Capital Cost for Pollution Abatement for Koppers-Totzek Process Using Eastern Coal	XV-21
XV-10b	Incremental Operating Costs for Pollution Abatement for Koppers-Totzek Process Using Eastern Coal	XV-22
XV-11a	Incremental Capital Cost for Pollution Abatement for Koppers-Totzek Process Using Western Coal	XV-23
XV-11b	Incremental Operating Costs for Pollution Abatement for Koppers-Totzek Process Using Western Coal	XV-24
XV-12	Incremental Cost of Gas	XV-25

SECTION 1

I. INTRODUCTION

Processes for producing clean fuel from coal, oil, oil shales, and tar sands are receiving increased attention today because:

- They offer a way to increase supplies of natural gas and petroleum products at a time when traditional sources are being depleted

- They generate clean fuels which can be burned with minimal release of harmful emissions to the environment.

Many of the clean-fuels processes which have been under development during the last decade are now becoming commercially viable as technical problems are solved, economies of scale are achieved, and the prices of alternative fuels increase.

From an environmental point of view, these processes are attractive because the fuel they produce is very low in sulfur content and contains virtually no other impurities. The impurities which were in the raw fuel feedstock are removed during the conversion process, and will be handled in an environmentally acceptable manner at the plant site. The overall pollution control problem is simplified by having the pollutants generated at a single processing site rather than at myriad combustion points. There remain many complex technical problems to be solved in controlling the emissions from clean-fuel processes.

1. PURPOSE OF THE STUDY

The objective of the research effort described in this report was to assess the technical feasibility and to estimate the costs of installing alternative pollution control systems on clean-fuel processes which are likely to become commercially viable within the next decade. The intent was not to establish standards but rather to:

- Determine the types and estimated amounts of pollutants generated in clean-fuel processes

- Determine the degree of availability of processes for minimizing emissions from these processes

- Estimate the economic and energy costs for control of these emissions

- Indicate possible means for utilizing the by-products from these processes in environmentally satisfactory ways.

The primary emphasis in the study was placed on the control of sulfur emissions, although other pollutant streams were considered and evaluated as well. In order to quantify pollutant streams, it was necessary to prepare:

- Detailed process flow diagrams, including unit processes for pollution control

- Energy and material balances for the process as a whole and for all major streams.

As a result, the process descriptions which are presented in this report are in many cases more complete than those appearing in other sources, particularly since they contain detailed identification of pollution control streams and processes.

Accomplishing the stated objectives of the research program was a major undertaking for several reasons:

- Many of the processes which may be commercialized within ten years are still in the early developmental stages and detailed data are not yet available. Hence, determining emissions levels from full-scale plants required extrapolation of preliminary results from pilot or laboratory tests.

- Most process developers have concentrated their efforts to date on the main process stream producing the clean fuel and have not yet devoted extensive time to the control of pollutant side streams. Hence, to analyze the emissions from these processes, it is necessary to postulate alternative control systems and to estimate emissions based on test data for these systems operated under different conditions.

- Almost all of the processes can be operated with different feedstocks with sulfur content ranging from almost zero percent to over seven percent. The by-product and pollutant streams will vary considerably in pollutant concentration as a result, and the cleanup processes which are applied will have to be selected in each case to handle the specific waste streams generated. There are a very large number of combinations of:

  - Basic clean-fuel processes
  - Potential feedstocks and product streams
  - Alternative cleanup processes,

  to be analyzed. To determine the optimum pollution control system, from an environmental and cost viewpoint for each clean-fuel process, would require a commitment of effort far beyond the scope of this program.

The approach adopted to deal with these problems and to provide results of value in assessing pollution control alternatives without undertaking a major engineering design program involved:

- Selection of representative processes to study in detail

- Discussion with process developers to obtain specific information not available in the published literature

- Application of informed engineering judgment to incorporate cleanup processes not specified by the developer and to extrapolate data and to estimate system performance characteristics from prototype process results.

The processes selected for detailed study were:

- Synthane (coal to high-Btu gas)
- CO_2 Acceptor (coal to high-Btu gas)
- Lurgi (coal to high-Btu gas)
- Lurgi (coal to low-Btu gas)
- Hygas (coal to high-Btu gas)
- U-Gas (coal to low-Btu gas)
- Koppers-Totzek (coal to low-Btu gas)
- COED (coal to oil)

- SRC (coal to coal or oil)
- Texaco Partial Oxidation (oil to synthesis gas or hydrogen)
- HDS (oil to oil)
- Gas Combustion Retort (oil shale to oil).

Descriptions of each of these processes are presented in Section 2 of this report. Although the results given, concerning pollution generation and control, are more comprehensive than data that are available elsewhere, it must be emphasized that these results are, in many ways, premature. Only a few of the above processes have yet been engineered to include pollution control systems. For others, significant modifications to the pollution control processes identified will doubtless be made before commercial application occurs; this report anticipates many developments in the control of pollutants from clean-fuel processes. Although the emission control processes are not yet proved in the applications presented in this report, this document nevertheless is a resource which can be used to assess the options that are currently available and to identify their capabilities and costs.

2. SUMMARY OF MAJOR RESULTS

Most of the clean-fuels processes considered in this report have not yet been developed to the point of commercialization and, as a result, the pollutant streams they will generate and the processes which will be used to control the environmental discharges from these streams can not yet be precisely defined. However, based on the preliminary data and engineering estimates which have been developed in this research program, it can be concluded that:

- Unit processes apparently exist to provide adequate control of most waste streams from clean-fuel plants, although some pollutants remain difficult to treat

- The pollutant emissions from clean-fuel processes will, in general, be relatively low when compared to emissions resulting from alternative uses of the raw fuel

- The total costs of pollutant control (1973 basis) for achieving low levels of plant emissions, in high-Btu coal gasification processes, range from 15 to 30 cents per million Btu and can be expected to increase in proportion to the severity of the emission controls required. As a comparison, using the same basis (1973) the overall cost of manufacturing high-Btu gas from coal is on the order of $\$1/10^6$ Btu and

the average regulated wellhead price of natural gas is less than $0.25/10^6$ Btu.*

- The cost of pollution control in the manufacture of low-Btu gas are more difficult to assess. From one point of view the overall process of low-Btu gasification followed by desulfurization may be considered as a pollution control system because it permits the combustion of coal with decreased emissions. In that case the overall cost of pollution control is about $0.65/10^6$ Btu of gas produced. On the other hand, using the same context as the other clean fuels processes reported here, the cost of the emission control facilities alone within these low-Btu coal gasification processes ranges from $0.10 to $0.33/10^6$ Btu.

- In the manufacture of clean liquid fuels from coal, oil, shale or high-sulfur crude, the total costs of pollution control range from about $0.05 to $0.25/10^6$ Btu. As a comparison, the controlled price of crude oil at $5.25/ bbl* is $0.90/10^6$ Btu.

Summary results supporting these conclusions are presented in the discussion which follows and the remainder of this report presents the detailed data and process analyses from which this summary information was drawn.

Table I-1 provides a brief listing of selected processes which can be applied to the various pollutant or product streams generated in clean-fuels processes. Emphasis is placed here on the treatment of streams containing sulfur, although in the process synopses presented in Section 2 of this report, the removal and recovery of other by-products and residuals are also discussed. The generic or licensed cleanup processes included in Table I-1 are those which have been applied most frequently to the clean-fuel processes discussed in this report. Many other alternatives are available and are discussed later in Chapter III.

The decision to apply a particular control process to a waste stream is based on the:

---

* These prices are based on 1973 data and may be expected to increase in the future.

Table I-1
Summary of Selected Wastewater Treatment, Sulfur Removal and Sulfur Recovery Processes

Type of Pollutant or Product Stream Treatment	Control Process[1]	Remarks
Acid-gas treatment	• Hot potassium carbonate	• An alkaline salt process that removes H_2S and CO_2 as well as CS_2 and COS. Sulfur compounds can be reduced to about 10 ppm.
	• Rectisol	• A solvent based process that removes CO_2, H_2S (down to 0.1 ppm) and the COS present
	• Selexol	• A solvent based process that can remove H_2S, COS and CO_2
	• Sulfinol	• A solvent-amine based system which removes CO_2 down to 10 ppm and H_2S to 1 ppm. CS_2 and mercaptans are also removed.
	• MEA (monoethanolamine)	• An amine scrubbing scheme which removes CO_2 and can reduce sulfur content to 1 ppm. COS, CS_2 and mercaptans are removed from the feed stream but degrade the MEA.
	• DIPA (diisopropanol amine)	• An amine system which removes H_2S and CO_2
	• MDEA (methyldiethanolamine)	• A tertiary amine system that is partially selective in removal of H_2S
Wastewater treatment	• Chevron	• Separates NH_3, CO_2 and H_2S from liquid waste streams
	• Phenosolvan	• Removes phenol from wastewater down to 20 ppm
	• Phosam	• Recovers NH_3
	• Lime softening, filtration, zeolite treatment, biological treatment	• Various treatment processes presently used
Sulfur Recovery	• Claus	• Recovers elemental sulfur from acid-gas streams containing as little as 2% H_2S. For economical use, the untreated stream should contain over 15% H_2S. COS and CS_2 can be removed by special treatment. Tail-gases usually require further treatment.
	• Stretford	• An indirect oxidation process that is up to 99% efficient in recovering elemental sulfur from low H_2S content streams. It is not effective in reducing COS content in the feed stream. The treated stream can contain as little as 1 ppm H_2S. CO_2 is not removed.

Table I-1
(Continued)

Type of Pollutant or Product Stream Treatment	Control Process (1)	Remarks
	• Allied	• Converts SO_2 to elemental sulfur
Claus tail-gas treatment	• Incineration	• Converts H_2S to SO_2 which may be further treated.
	• Beavon	• Can convert most sulfur forms to H_2S which is eliminated in a Stretford unit. Reduces sulfur content to below 250 ppm.
	• Scot	• Similar to Beavon process, but recovers H_2S in DIPA for recycle to a Claus unit.
Stack gas cleanup	• Wellman-Lord	• A sodium-based scrubbing process which can remove SO_2 down to less than 250 ppm. Can also be used for Claus tail-gas treatment following incineration.
	• Lime	• A general type of scrubbing process currently practical to remove SO_2 from stack gases.
Trace sulfur removal	• Iron oxide, zinc oxide or carbon treatment	• Also called sulfur guards or guard drums. Adsorbs traces of sulfur remaining in the main gas stream (< 300 ppm sulfur containing streams).

(1) The selection and order of processes indicated does not imply a preference based on effectiveness of treatment or optimized cost.

- Composition of that stream
- Severity of treatment required.

The waste stream composition in turn depends on the feedstock, the process conditions, and the product mix desired. Hence, the application of the processes indicated in Table I-1 can only be made after detailed analysis of the specific clean-fuel operation to be controlled.

Most of the purification processes discussed in this report were developed for application in systems other than clean-fuel plants. For example, the processes for removal of sulfurous compounds such as H_2S were developed for gas field applications. Hence, these purification processes have not yet been specifically engineered for clean-fuel process applications. The acid-gas cleanup processes likewise have not been developed specifically for clean-fuels applications. However, in the context of this document, they have not

been considered as pollution control systems. In many processes, acid-gas treatment is required to protect sensitive downstream catalysts. In the case of low-Btu gases, however, sulfur removal from the gas stream is considered an emission control process because sulfur removal is not intrinsic to the process operation. Nevertheless, the operation of the acid-gas treatment sections of all the processes is a major factor in the selection and performance of downstream pollution control units. The uncertainty of this operation has been one consideration in the analysis.

The primary pollution control processes considered in this document are wastewater treatment and sulfur recovery. The cost of installing and operating these processes is considered as an additional cost to the basic process. These costs are listed for each process as the incremental cost of pollution control (Table I-2).

The pollution control processes used here have generally not been applied to clean-fuels processes. These process uncertainties have been another consideration in this analysis. In addition, it is likely that new processes will be developed to handle such pollution control problems as:

- Carbonyl sulfide and carbon disulfide generation
- Cyanide in wastewater
- Thiocyanate formation and its effect on ammonia and sulfur removal from wash water

which have not yet been fully resolved by clean-fuel developers.

Table I-2 provides a summary of the principal results obtained from the analyses of specific clean-fuel processes presented in Section II of this report. For each of the 12 processes selected for study and for each feedstock analyzed, the table gives

- The disposition of the sulfur in the feed
- The costs for pollution control computed using two accounting methods
  - Discounted cash flow
  - Utility financing.

Table I-2
Summary of Costs for Pollution Control

			Sulfur Content (%)		Disposition of Sulfur in Feed (%)				Costs of Pollution Control††			
Process	Feedstock	Alternate Treatment Modes‡	In Untreated Feed*	In Product Fuel	As Elemental Sulfur	To Atmosphere	In By-products/ Residuals	In Product Fuel	DCF Method, ¢/10⁶ Btu (¢/10⁶ kcal)		Utility Financing Method, ¢/10⁶ Btu (¢/10⁶ kcal)	
Synthane	Pittsburgh Seam Coal	Direct combustion of char	1.60	0.00	74.4	13.6	12.0	0.0	19	(75)	15	(60)
		Indirect combustion of char	1.60	0.00	85.6	2.4	12.0	0.0	25	(99)	19	(75)
	Illinois No. 6	Direct combustion of char	2.90	0.00	91.3	7.3	1.4	0.0	22	(87)	17	(67)
		Indirect combustion of char	2.90	0.00	96.9	1.7	1.4	0.0	29	(115)	22	(87)
CO_2 Acceptor	North Dakota Lignite		0.59	0.00	77.1	16.5	6.4	0.0	8	(30)	5	(21)
Lurgi (High-Btu)	Navajo Coal	Indirect combustion of coal	0.69	0.00	95.9	1.9	2.2	0.0	24	(95)	16	(63)
		Direct combustion of coal	0.69	–	–	–	–	–	19	(71)	12	(48)
Hygas	Montana Subbituminous		0.51	0.00	95.1	2.6	2.3	0.0	20	(80)	14	(56)
	Illinois No. 6		3.93	0.00	98.1	0.8	1.1	0.0	20	(81)	14	(54)
COED	Utah A Seam Coal	Hydrogen generation by gas reforming	0.50	0.02	29.4	0.2	69.4	1.0	5	(18)	4	(14)
		Hydrogen generation by char oxidation	0.50	0.02	40.6	17.0	41.4	1.0	5	(20)	4	(15)
	Illinois No. 6 Coal	Hydrogen generation by gas reforming	3.30	0.22	84.2	0.8	14.1	0.9	19	(75)	14	(56)
SRC	Kentucky No. 11 Coal		3.14	1.17	77.3	0.8	1.6	20.3	5	(19)	3	(11)
Texaco Partial Oxidation	Residual Fuel Oil	For hydrogen generation	6.20	0.00	98.0	2.0	0.0	0.0	3	(11)	2	(6)
		For synthesis gas generation	6.20	0.00	98.4	1.6	0.0	0.0	4	(15)	2	(9)
HDS	Persian Gulf Crude Oil	Case 1	1.70	1.66	12.4	0.1	0.4	87.1	7	(28)	–	
		Case 2	1.70	0.98	51.6	0.5	0.5	47.4	15	(60)	–	
		Case 3	1.70	0.48	75.7	0.8	0.5	23.0	24	(95)	–	
		Case 4	1.70	0.20	89.2	0.9	0.6	9.3	23	(91)	–	
Gas Combustion Retort	Colorado Mahogany Zone		0.60	<0.01	19.1	1.1	79.7	nearly 0.0	7	(27)	5	(19)
Lurgi (Low-Btu)	Navajo Coal		0.69	0.1	91.95	0.99	1.99	5.07	15	(60)	10	(40)
U-Gas	Pittsburgh Seam Coal	Combined cycle case	4.14	0.02	95.7	0.20	2.0	2.1	33	(131)	23	(91)
		Fuel gas case	4.14	0.02	94.9	<0.01	2.0	3.0	16	(63)	12	(48)
Koppers-Totzek	Illinois Coal		4.87	0.08	97.81	0.15	–	2.04	24	(95)	19	(75)
	Eastern Coal		1.08	0.05	92.27	0.30	–	7.43	14	(56)	11	(44)
	Western Coal		0.67	0.04	90.92	0.30	–	8.78	13	(52)	10	(40)

* Percent sulfur calculated on an as received basis.

‡ See appropriate process synopsis.

††Based on product heat content.

The results presented in Table I-2 must be interpreted with care. In particular, the reported pollution control costs cannot be divorced from the feedstock indicated; therefore, it is not valid to compare costs from one process to another unless the feed is the same. Even with the same fuel, the comparison is of doubtful value. These future clean-fuel plants will be much like present oil refineries and no two oil refineries, even though operating at similar production rates, are identical. The differences between the basic processes considered in Table I-2 are even more pronounced.

There are several other cautionary notes concerning the results presented in Table I-2 which are worth emphasizing:

- All of the results presented are based on analyses of hypothetical plants in which the feedstock, unit operations, and end-product mix were specified in an arbitrary fashion. Hence, the results cannot be taken to reflect optimal conditions, either from a sulfur recovery or cost viewpoint.

- Not all of the processes selected for consideration are equally efficient or cost-effective in removing sulfur from the product or by-product streams generated. A variety of processes were intentionally chosen to illustrate different alternatives. Hence, the results in Table I-2 may reflect more the choice of control units than the intrinsic emission levels of the basic clean-fuel process.

- In general, pollution control costs will be higher when the feedstock impurity level is greater. Hence, the emissions levels and the cost estimates in Table I-2 should be correlated with the sulfur content of the feed.

It is reasonable to expect that as individual plants are installed and control processes are carefully engineered to deal with the pollutant concentrations actually present in the waste streams, both net emissions levels and costs would decrease. Hence, the results in Table I-2 might well reflect pessimistic estimates of pollution control costs. These estimated costs are typically 15 to 30 percent of the projected cost of manufacturing the clean fuel.

The primary emphasis in this research has been placed on control of emissions to the environment from the product and waste

streams indicated earlier in Table I-1. Technological solutions are available or are being developed to deal effectively with these problems. But there are other environmental impacts associated with a production scale facility (for example, 7.1 x $10^6 m^3$/day, or 250 x $10^6 ft^3$/day, of pipeline quality gas) that are not readily amenable to technological fixes:

- Community Impact: The total labor requirement for the plant and mine may range between 1600 and 2400 persons; related employment might bring the total employment level to 4000, which implies a community of 15,000 people. Not only will this influx of people to a new plant site have a major impact on the local economy, but it will also have an impact on the environment.

- Aesthetics: The physical magnitude of clean-fuel plants, particularly those gasifying coal, is significant (several times larger than a major chemical plant producing ammonia, for example). The chemical processing trains (reactors, pumps and piping) might be over a thousand feet long. The boiler plant required to produce energy for the process would be equivalent to a 300 megawatt (MW) power station. Furthermore, the mine required to feed a major coal gasification (or shale oil) facility must be very large. It is estimated, for example, that the mine at the El Paso Four Corners site will be one of the largest in the world. The coal storage pile at any such facility may have to be as large as 9 meters (30 feet) high, 90 meters (100 yards) wide and 1600 meters (1 mile) long to provide a sixty-day supply. The entire plant site might require as much as 500 to 1000 acres and include large ponds for cooling water and waste disposal.

Even if the maximum requirements are not met, the potential impact of clean-fuel processes in the future can be significant. According to the Final Report of the Supply-Technical Advisory Task Force, Synthetic Gas-Coal, April 1973 for the Federal Power Commission, the total projected number of coal gasification plants alone in 1990, will be 36 based upon projected commercial investment. If, however, the goals of Project Independence are to be met, it has been estimated that the 41 clean-fuel facilities listed in Table I-3 must be constructed immediately. In order to compensate for decreasing production in domestic gas fields and to reduce the requirements for imported oil

Table I-3
Synthetic Fuel Plants Recommended
for Project Independence

Number of Plants	Product	Quantity
5	Shale oil	16×10^6 liters/day (100,000 bbl/day)
12	High-Btu gas from coal	7.1×10^6 m^3/day (250×10^6 ft^3/day)
16	Low-Btu gas from coal as fuel for power generation	800--1000 megawatts (MW) of electricity
3	Motor fuel and clean distillate fuel oils from coal	16×10^6 liters/day (100,000 bbl/day)
3	De-ashed coal or syn-crude from coal	16×10^6 liters/day (100,000 bbl/day)
2	Fuel grade methyl alcohol from coal	18,000 m tons/day (about 20,000 short tons/day)
total 41		

to acceptable levels, as many as 165 major synthetic fuels plants would have to be constructed before 1985. The net environmental burden of these plants would be substantial even if plant emissions were controlled as adequately as appears possible from the results of this study. Alternative uses of raw fuel would likely result in net emission levels and environmental impacts far exceeding those of the clean-fuels plants.

3. ORGANIZATION OF THE REPORT

This report has been divided into two sections as follows:

- Section 1: In addition to this introductory chapter, this section contains chapters
  - Presenting the approach used in conducting the study
  - Dealing with three topics common to all process descriptions
    - Characterization of pollutants emitted
    - Nature of control process alternatives
    - Cost accounting procedures

Section 2: This section presents the process synopses for the 12 processes selected for detailed study. Each process description is presented according to a uniform format and each can be extracted from the report and used as an independent guide to the particular process and its pollution control problems.

Preparation of the report has been guided by two requirements:

- The need to have specific information on pollution control alternatives and costs, particularly for sulfur control, to aid in the development of reasonable source performance standards for clean-fuels plants

- The need to have a standard reference for use in evaluating Environmental Impact Statements for clean-fuels plants.

If it is recognized that much of the information presented herein is preliminary and subject to modification and that many basic assumptions, estimates and judgments have been required to compensate for lack of empirical data, then the report can serve both purposes adequately.

II. SUMMARY OF ANALYSIS METHODOLOGY

There is a large number of clean-fuels processes which are currently available commercially or are under development and will be available for production use in a few years; the number of alternative pollution control systems which could be applied to these basic processes are equally large. To conduct detailed engineering analyses of all possible combinations of processes and clean-up units and to determine the optimum systems from both an economic and pollution control viewpoint would have been well beyond the scope of this study. It was, therefore, essential to adopt an approach which would both meet the objectives of the program and permit a reasonable degree of technical detail to be provided for each of the clean-fuel processes considered.

The approach which was selected consisted of three basic steps:

- Classification: All the clean-fuel processes which are now in use or which could be commercially viable within ten years were identified and classified. The classification scheme adopted permitted the various processes in each feedstock-product class to be compared and contrasted.

- Selection: Criteria were established for the selection of a few representative processes from each feedstock-product class for detailed study. A total of 12 processes were selected based on these criteria.

- Case Study Analysis: Each of the processes selected was analyzed in detail as a case study. Alternative pollution control processes were selected for application to the basic clean-fuels processes when specific recommendations were not made by the process developer. This approach permitted a variety of different systems to be considered in reasonable depth.

The purpose of this chapter is to present the specific results of the classification and selection steps and to summarize the methodology used in the case study analyses. The discussion is divided into four parts:

- A review of the classification scheme

- A summary of the criteria used to select representative processes and the rationale for each selection

- The approach used to identify and assess pollution control problems associated with each of the processes selected

- A summary of the approach used in preparing the synopsis of each selected process, including flow sheet preparation, energy and material balance calculations, description and analysis of pollution control procedures and calculation of control costs.

1. CLASSIFICATION OF CLEAN-FUELS PROCESSES

The first step in the study was to identify all of the clean-fuel processes which have been discussed in the literature and classify them in a systematic way. Since only those processes which can be expected to be commercially viable within the next ten years were of interest, some classes of processes were eliminated from consideration, including:

- Processes which are old and outdated due to recent technical advances (e.g., Sun-Thermal and Koppers-Kontalyst)

- Processes only recently announced on which preliminary research and development work is now being undertaken (e.g., EXXON process)

- Processes which, although licensed, have major development problems to be solved and hence may not be commercially available within ten years (e.g., In-situ thermal process for tar sands and the In-situ process for shale oil extraction).

In addition, processes essentially identical to established ones, though carrying different names, were eliminated. This initial screening, however, left nearly 50 distinct processes to be classified.

The intent of the classification scheme was to establish the similarities and differences between processes and to develop a basis

for selecting representative processes for detailed analysis. Hence, the processes were first grouped into eight main categories according to the feedstock-to-clean-fuel-product conversion being accomplished:

- Coal to gas
- Coal to coal or oil
- Lightweight oil to gas
- Middleweight oil to gas
- Heavyweight oil (and tar) to gas
- Oil to oil
- Oil-bearing minerals (tar sands and shale) to oil
- Oil-bearing minerals to gas.

Then, for each of these categories, a series of generic process steps (typically unit processes) was established; these served as headings in the classification matrix. The processes identified in each major category were described synoptically in the classification matrix for that category. In addition to process step descriptions, the matrix includes comments on the status of development and on principal pollution control problems.

Tables II-1 through II-8 present the process classifications developed. They provide a review in summary form of all the processes which have near-term commercial potential and permit a straightforward comparison of the features of the various processes. The processes are not arranged in any particular order in the matrices nor are the descriptions intended to be comprehensive; however, the matrices do provide a convenient reference guide to clean-fuel conversion alternatives.

2. CRITERIA FOR SELECTION OF PROCESSES FOR DETAILED ANALYSIS

From the conversion processes included in the classification matrix, 12 were selected for detailed study and analysis of pollution control procedures and costs. The primary criteria used to make these selections were that:

> The processes, taken together, represent all the major elements of fossil fuel conversion technology now being practiced

Table II-1
Coal to Gas Conversion

Process Steps / Processes	Pretreatment and Limitations	Gasification and Hydrogen Source	Quenching	Acid-Gas Cleanup	Sulfur Removal	CO-Shift Reaction	Trace Sulfur Removal	Methanation	Dehydration	Technology	Comments on Pollution
Hygas Process (IGT)	Can use all domestic coals. Caking coals are pretreated with air and steam in fluidized bed at 315°-400°C.	Coal is hydrogasified into $CO+H_2+CH_4$ with steam and hydrogen. H_2 is externally supplied to the Hygas portion of the process. Ground, dried coal is slurried with light oil and fed to a two-stage fluidized bed hydrogasifier operating at 70-105 kg/cm^2. An electro-thermal gasifier, oxygasifier or a steam-iron process, using char from the second stage of the Hygas unit, produces hydrogen-rich gas which is supplied for gasification. Exit gas temperature is 315°C.	Gas is quenched with water or oil to condense and separate the oil and water.	CO_2+H_2S is removed by any of the numerous available processes (e.g., Rectisol, Selexol, Hot Carbonate Process). The Hygas process requires acid-gas cleanup prior to methanation reaction.	H_2S is reduced to elemental sulfur and removed (e.g., by Claus system) followed by an off-gas purification step.	$CO+H_2O \rightleftharpoons H_2+CO_2$ reaction over a catalyst, is adjusted to obtain an H_2/CO ratio of about 3 for subsequent methanation	Removed by caustic activated carbon or ZnO. Necessary to preserve methanation catalyst.	$CO+H_2 \rightarrow CH_4+H_2O$ in presence of a catalyst	With glycol	In pilot plant production (68 m tons of coal → 42,000 m^3/day)	For the pretreatment of caking coals, sulfur existing in the pretreatment off-gas must be withdrawn. As with most processes, the amount of sulfur remaining in the spent char is dependent on characteristics of original feedstock and the conditions of hydrogen manufacture.
Koppers-Totzek Process (Koppers Co.)	Can use all domestic coals.	Mixture of coal and O_2 is fed into a steam stream. Operation is at atmospheric pressure. Exit gas temperature is 1480°C.	Required	Required	Required	Required	Required	All the methane is produced as, the gasifier crude gas contains $CO+H_2$	Extensive drying is necessary.	In commercial production for low BTU gas (N_2-free).	Very high off-gas temperature precludes the formation of any compounds less stable than H_2, CO, CO_2.
Lurgi Process (Lurgi Gesellschaft fuer Waeme und Chematechnik mb H)	Limited to non-caking coals. Fine coal sizes must be briquetted.	Lock hoppers feed crushed coal to a moving bed gasifier. A revolving grate feeds in O_2 and steam while removing ash. Operating pressure is up to 33 kg/cm^2. Exit gas temperature is between 370° and 593°C.	Gas is washed by gas liquor	Not required prior to CO-shift reaction but required before methanation.	Required	50% of the gas bypasses this shift reaction. Not required for N-diluted gas	Required for high BTU gas only.	More methanation required than for Hygas process. Not required for low BTU gas.	Increased methanation results in increased water removal. Some CO_2 is also removed.	In commercial use for low (400-450) BTU gas (without methanation) overseas.	Relatively low off-gas temperature and countercurrent design increase appearance of tars, NH_3, etc. in waste quench liquor.
BI-Gas Process (Bituminous Coal Research)	Can use all domestic coals. No pretreatment is required.	Coal is gasified with hydrogen. The resulting char feeds O_2 and steam while removing ash. Operating pressure is 70 kg/cm^2. Exit gas temperature is 927°C.	With hot condensate. Quantity is regulated to ensure correct proportion for subsequent shift reaction.	Not required prior to CO-shift reaction but required before methanation.	Required	100% of crude gas is subjected to the CO-shift reaction.	Required	Required.	Required.	Pilot plant being constructed (108 m ton/day → 71,000 m^3/day).	Slagging gasifiers at high temperature minimizes sulfur content of the ash. High off-gas temperatures should reduce tars, amines, phenols, etc. in the quench liquor.
CO_2 Acceptor Process (Consolidated Coal Co.)	Limited to more reactive coals (e.g., lignite, and sub-bituminous coal).	In a devolatizor section, coal, steam, hydrogen-rich gas (from the gasifier) and calcined dolomite react to supply heat ($CaO+CO_2$) to support the reactions; the dolomite is regenerated by combusting spent char; hydrogen-rich gas is produced in the gasifier by reaction of char. Here again, dolomite supplies heat required.	With water.	Required prior to methanation.	Required	Not required.	Iron oxide	Required.	Required.	Pilot plant startup in process. (36 m ton kcal/day → 57,000 m^3/day).	Sulfur treatment of the regenerator off-gas is required.

Table II-1
(Continued)

Process steps / Processes	Pretreatment and Conditions	Gasification and Principal Source	Quenching	Acid-Gas Cleanup	Sulfur Removal	CO-Shift Reaction	Trace Sulfur Removal	Methanation	Dehydration	Technology	Comments on Pollution
Synthane Process (Bureau of Mines)	Coal used is dry coarse grade. Caking coals are pretreated with O_2 and steam. [illegible] gas from a free fall [illegible]	Additional steam and O_2 is supplied, with [illegible] gasification. The process operates at 35-70 [illegible], but gas temperature is 400°C	In water scrubber	Not required prior to CO-shift reaction but required before methanation	Required	67% of the gas bypasses this shift reaction	Required	Required	Same as Hygas	Pilot plant under construction	Nature of pretreatment does not produce a separate, sulfur-laden stream.
COGAS Process (FMC Corp.)	[illegible]	Char produced from pyrolysis of coal is sent to gasifier. Crude gas is produced from the reaction of char and steam, [illegible] heat indirectly from the combustion of char [illegible] Operating pressure is [illegible]	Required	Required	Required	Required	Required	Required	Required	Synerude is also produced by hydro-treating oil from pyrolysis stage. 20,140 m ton coal 7.1 x 10^6 m^3 gas + 24,000 bbls' day synerude. Developed from COED Process. Pilot plant being constructed	Both synerude and the product gas can be treated for sulfur removal
Molten Salt Gasification Process (Chem. [illegible])	Gas [illegible] No pretreatment required	Crude steam and O_2 are [illegible] Na_2CO_3. Operating pressure [illegible] 1300-1400°C, temperature is 927°C	With water	Required prior to methanation only. Most of the sulfur remains in the salt	Required	Same as Hygas	Required	Required	Required	In development stage. Difficulties exist in gasifier construction to prevent corrosion by the molten salt	The sulfur is recovered during regenation of molten salt
AT-AS Process (Arthur D. Little Corp.)	Coal used dry coarse grade. No pretreatment required	A steam and O_2 mixture, O_2 and [illegible] are fed into a bed of [illegible] crude gas. As [illegible] and sulfur are removed [illegible] before [illegible]. Operating pressure is atmospheric. Unit temperature is about 1427°C	In waste heat boiler. Dissipated heat used to generate steam for gasifier	Required prior to methanation only	Slag is desulfurized and removed by Claus or other process	Required	Required	Required. More extensive than for Hygas	More dehydration required than for Hygas	In pre-pilot plant stage	Primary sulfur removal is accomplished by adding flux to molten area. This slag is then desulfurized. High off-gas temperature will minimize undesirable compounds
[illegible] Process (FMC)	Process [illegible]	[illegible] at 22 [illegible] and 1040°C. [illegible] operating temperature is [illegible]. Low sulfur ash. [illegible] steam-char reaction	Waste heat boiler is used	Novel high temperature process being considered also standard acid-gas cleanup processes can be used	In novel acid-gas cleanup, elemental sulfur is recovered. Otherwise Claus process can be used	Not required	Not required	Not required	Wet, hot, low Btu gas, is consumed on-site	Under development for low Btu gas	A high temperature sulfur removal process is under development
Slagging Process (Bureau of Mines)	Required for [illegible]	O_2 and steam are introduced into a fixed-bed gasifier. Operating conditions are 815°-1010°C and atmospheric pressure	In waste heat recovery system	Required	Required	Not required	Not required	Not required	Not required	In commercial production of Btu gas	High gasifier temperature ensures that all tars and heavy hydrocarbons are reacted
Hygas Process (Bureau of Mines)	Caking coal [illegible] pretreatment. Pulverized	Reacts with concurrent stress of hot gas in coal hydrogenation reactor (815°C). Removed char is fed to a second gasifier where it reacts with H_2 to form more CH_4. H_2 is externally supplied	Required	Required	Required	Required	Required	Required	Required	Bench unit in operation. 22 m ton day pilot plant planned	Since no oxygen is introduced into the gasifier, reduces amount of carbon oxides; the acid-gas removal and methanation steps are greatly simplified

Table II-2
Conversion of Coal to
Coal or Oil

Process Steps / Processes	Pretreatment	Dissolution or Pyrolysis	Ash & Sulfur Removal	Removal of Solvent and/or Separation of Product Oil	Technology	Comments on Pollution
Char Oil Energy Development Process-COED (FMC)	Coal is crushed, dried, and dust is cycloned out	Coal is pyrolyzed in four stages. The temperatures of the stages are 315°, 454°, 538°, and 871°C, respectively. The gas from the fourth stage flows counter current to the solids through the other stages. Most of the volatile products are thereby collected.	COED process generates a hot char which can be further desulfurized by lime-treating or gasification (COGAS)	The volatile products are condensed and the product oil is hydrodesulfurized prior to sale. Noncondensable fuel gases are desulfurized and consumed on site.	A pilot plant (33 m ton/day) is in operation. In all coal-to-oil conversions illustrated, synthetic crude can be converted into product oil by conventional refinery processes	Sulfur requires removal from product liquid and gas streams and from char
Synthetic Oil Process (U.S. Bureau of Mines)	Coal is crushed, dried, and slurried with recycled oil.	The slurry, mixed with recycled H_2, flows through the catalytic fixed-bed reactor. The reactor is operated at 450°C and 142 to 250 kg/cm^2. The combined effect of the H_2 turbulence and catalyst is to liquefy and desulfurize the coal.	The separated oil is centrifuged to remove ash and inorganic sulfur.	The product from the reactor is cooled; oil and gas is separated. The separated gas in the high-pressure receiver is recycled after H_2S and NH_3 is removed by absorption in water. Part of the separated oil is recycled to convey more coal through the feed pump into the reactor	A 1/2 m ton/day pilot plant is in operation and another pilot plant is planned.	Product oil must be hydrodesulfurized. Char contains sulfur.
Solvent Refined Coal Process – (SRC) (The Pittsburgh & Midway Coal Mining Co.)	Coal is pulverized, dried, & slurried with hot solvent (290°-430°C)	The coal-solvent slurry is pumped, together with hydrogen, through a preheater to a reaction zone or dissolver. The dissolver is operated at a temperature of about 430°C at 71 kg/cm^2. About 95% of the moisture and ash-free coal is dissolved.	After separation of excess H_2, the dissolver effluent is filtered and ash and undissolved coal is removed. Sulfur can be recovered from the stack gas by a modified Claus process.	Filtered oil is heated and vacuum-flashed. The temperature and pressure of the vacuum drum is controlled to provide a bottoms product of 93°C to 187°C melting point. The overhead product is further fractionated into aromatic products and a wash solvent. The bottom fraction is a hot liquid, which is the major product of the process	A 45 m ton/day pilot plant is under construction. Solvent-refined coal can be hydrotreated to product liquid hydrocarbon.	For coal products, some sulfur remains in coal; for syn-crude products, sulfur can be removed by hydrodesulfurization. Residues contain sulfur and pyrites.
H-Coal (Hydrocarbon Research, Inc.)	Coal is dried (at 65°-93°C in a N_2 atmosphere), pulverized, and slurried with coal-derived oil.	The coal-oil slurry is charged continuously with hydrogen to a reactor containing a bed of ebullated catalyst. The coal is catalytically hydrogenated and converted into liquid and gaseous products at 160-190 kg/cm^2 and 455°C.	Ash is removed in the fluid coking section. H_2 and NH_3 are removed in the form of sulfuric acid and ammonium sulfate.	The reactor effluent is separated into gas and liquid streams. After removal of light HCs from the gas, it is recycled. Liquids containing the coal residue are sent to a fractionator. The heaviest liquid containing the coal residue is steam-stripped to remove light HCs, and then vacuum-distilled. The vacuum bottoms, which are reduced to 50% solids, are pumped to fluid coking.	Being tested on process development unit (2-5 m ton/day).	Problems are similar to those of the Synthetic Oil Process.

Table II-2
(Continued)

Processes \ Process Steps	Pretreatment	Dissolution or Pyrolysis	Ash & Sulfur Removal	Removal of Solvent and/or Separation of Product Oil	Technology	Comments on Pollution
Consol Synthetic Fuel Process-CSF (Consolidation Coal Co.)	Coal is crushed, dried, and slurried with a solvent. Large coal particles are discharged.	Slurry is pumped through tubular furnaces where it is heated to extraction temperature. Extraction occurs, however, mainly in an extraction vessel.	Untreated coal is removed in hydroclones. H_2S from gas treatment is converted to sulfur in a modified Claus plant.	By fractionating the product from the reactor	Pilot plant 64 m ton/day was operational for months.	Problems are similar to those for the SRC Process.
Methanol Synthesis	Coal is oxygen gasified to synthesis gas.	Indirect conversion of coal to oil through synthesis gas. Not a dissolution or pyrolysis process.	Similar to Texaco process.	Catalytic conversion to methanol and condensation.	Commercial overseas.	Similar to coal gasification.
Fischer-Tropsch Process	Coal is oxygen gasified to synthesis gas.	Indirect conversion of coal to oil through synthesis gas. Not a dissolution or pyrolysis process.	Similar to Texaco process.	Catalytic formation of oil from synthesis gas.	Commercial overseas.	Similar to coal gasification.
Meyers Process -TRW	None	Selective dissolution of pyritic sulfur by ferric ion.	Under development.	Under development.	Bench scale under development.	Not yet analyzed.
Ledgemont Process -Peabody Coal	None	Selective attack on pyritic sulfur by oxygen under pressure.	Under development.	Under development.	Bench scale under development.	Not yet analyzed.

Table II-3
Conversion of Lightweight
Oil to Gas

Processes \ Process Steps	Prefraction-ation	Hydrodesul-furization	H_2S Removal	Vaporization	Low Temperature Catalytic Reforming	Metha-nation	Dehy-dration	CO_2 Removal	Technology	Comments on Pollution
Catalytic Rich Gas - CRG Process (British Gas Council)	Feedstock is distilled to remove all heavy factions (BP over 204°C These will deactivate HDS catalysts.	Mixture of oil and H_2 reacts in presence of catalyst and converts sulfur compounds to H_2S. Numerous processes available (e.g., Hydrofining). For higher sulfur contents in fuel, conventional HDS units are used.	In a bed of ZnO. ZnS is regenerated and sulfur removed.	Mixed with steam and superheated. This prevents carbon formation and supplies heat for reforming reaction.	Oil and steam react in presence of catalyst (at 550 psig) to produce crude gas. The steam is the source of H_2 required to assure correct H_2/CO ratio. Exit gas temperature is 400°-480°C. Then gas is hydrogasified (to increase CH_4 content). Some crude gas is used to manufacture H_2 for HDS and oil hydrogenation.	Required	Required	Required	Low BTU plants in existence. Hi BTU plants will begin operation in 1973. Naphtha is in short world supply.	There is little sulfur disposal problem due to low sulfur content of feedstock.
JGC Methane Rich Gas Process (Japan Gasoline Co.)	Required. Fractions up to 260°C allowed.	Required	Required	Required	Oil and steam are continuously introduced. Continuous reaction permitted by a unique catalyst.	Required	Required	Required	In commercial use.	There is little sulfur disposal problem due to low sulfur content of feedstock.
Gasynthan Process (Basf/Lurgi)	Allowable max to 215°C BP	Required	Required	Required	Reaction occurs in adiabatic reactor at 400°C. The crude gas is fed to a 2nd adiabatic reactor where H_2+CO_2 react (over a catalyst) to increase CH_4 content.	Required	Required	Required	In commercial use to produce low BTU gas. Hi BTU production in pilot plant stage.	There is little sulfur disposal problem due to low sulfur content of feedstock.
Sun/Thermal Process (Howe-Baker)	Uses naphtha	Required	Required	Required	Vaporized naphtha contacts flame and undergoes immediate endothermic thermal decomposition. Air is used instead of O_2.	Not required	Not required	Required	In commercial use.	There is little sulfur disposal problem due to low sulfur content of feedstock.
ADTEK (IGT)	Takes light hydrocarbons	Molecular sieve treatment and hydrodesulfurization is required.	Required	Required	The mixture of steam and hydrocarbon feed (at 438°C and 26 kg/cm^2) is fed to the fixed bed (510°C) catalytic reformer.	Required	Required	Required	Tested on experimental scale.	There is little sulfur disposal problem due to low sulfur content of feedstock.

Table II-4
Conversion of Middleweight
Oil to Gas

Processes \ Process Steps	Pretreatment	Gasifier	Aromatics Removal	H_2S Removal	Secondary Hydrogenation	Dehydrating	Technology	Comments on Pollution
Chemically Active Fluid Bed Gasification - CAFB (ESSO)	Required	Oil is gasified with air at 815°C in a fluid bed of limestone. All sulfur can be removed as CaS. The limestone is regenerated & recycled to gasifier.	Required	Required	Required	Required	Pilot plant design stage.	Regenerator purge gas stream contains SO_2, vanadian, lime, trace metals.
Gas Recycle Hydrogenation — GRH (British Gas Corp.)	Feedstock + H_2. Max BP is 345°C Heated by recycled gas.	Hydrogenation occurs at about 760°C and 71 kg/cm^2	In Benzol absorber.	Required	A side stream of gas is diverted for production of H_2 added during preheat. Remaining gas is hydrogenated.	Required	Pilot plant stage for hi BTU gas. Low BTU gas plants are in commercial existence.	Additional sulfur in feedstock can be handled by a conventional acid-gas clean-up process.
NRG Reforming (MiFuji Iron Works Co.)	Any hydrocarbon fraction with an end boiling point of 370°C or less (such as naphtha, kerosene). Air and hydrocarbons are preheated.	Hydrocarbon, air and steam are fed to the reactor, which operates at about 815°C. Some of the product gas is recycled.	Not required.	Required	Not required	Required	Two small commercial plants are in operation.	
Petrogas Process (Gas Machinery Company)	Feedstocks heavier than naphtha.	Feed undergoes thermal reforming with steam.	By oil.	Removed by Stretfor Process.	Can be by hydrogenation or methanation.	May be required.	In development stage.	
Oil Hydrogasification (IGT)	Straight-run distillate feedstocks with boiling point up to 360°C. Feedstock and H_2 are preheated.	Noncatalytic reaction of oil with free hydrogen at elevated temp. 595°-760°C and pressure 36-107 kg/cm^2.	Aromatics are removed in Benzol absorber.	Required	Methanation is required.	Required	A large pilot plant with a capacity of 11,300 m^3/day of product gas was operated at IGT in early 1950's. Additional pilot plant work on a combination of hydrocracking and pressure hydrogasification was carried out from 1955 to 1959.	

Table II-5
Conversion of Heavyweight Oil (and Tar) to Gas

Process Steps / Processes	Pretreatment and Limitations	Gasification	Quenching	Acid Gas Clean up	Sulfur Recovery	CO Shift Reaction	Trace H_2S Removal	Methanation	Dehydration	Technology	Comments on Pollution
ONIA-GEGI Process (Office of National Del'Azote)	All oils	Oil and steam is atomized and passed over hot catalytic bed where it is cracked to gas. Included is a catalytic cycling reforming process in which catalyst is regenerated. Exit gas temperature is 870°C. Operation is at ambient pressure. Catalyst removes sulfur.	Water wash	Same as for coal gasification schemes						Developing stage.	Sulfur removal problems are similar to those for coal gasification.
Shell Partial Oxidation Process and Texaco Partial Oxidation Process	No limit on feedstocks	Preheated feedstock and oxygen are charged to the non-catalytic reactor operated at 1095°C-1510°C and up to 105 kg/cm^2	Hot gas passes through a waste heat boiler, a carbon removal unit and a water cooler scrubber.	Same as for coal gasification						In commercial use.	Sulfur removal problems are similar to those for coal gasification.
H-Gas (Hydrocarbon Research Inc)	Also converts high sulfur resid oil, coal tar, or shale oil to SNG	Feedstock is hydrogasified in the presence of H_2 to produce light hydrocarbon gases. Coke and heavy residual oil are gasified with steam and O_2 to provide the H_2 atmosphere for the hydrogasification step.	Hot gas is quenched with a self-generated stream of gas oil and fed to a liquid recovery system. The liquid HC is recovered by a fractionation and absorption system.	Same as for coal gasification						Has passed its pilot plant stage and ready for demonstration plant.	Sulfur removal problems are similar to those for coal gasification.
HOC Unit (M. W. Kellogg)	No limit on feedstocks	The crude is fractionated. The deasphalted oil and the virgin 185 to 537°C fractions are hydrocracked to yield 185°C and lighter material. This can be used to make SNG by the CRG process. The asphalt is converted to a reducing synthesis gas by partial oxidation with oxygen. Steam is added to shift the gas to make more H_2 which can be used in hydrocracking.	Not required	Same as CRG process.						Commercially available.	Sulfur removal problems are similar to those for coal gasification.
Fluid Bed Hydrogasification Process (IGT)	No limitation on feedstocks	Preheated feed oil is fed to the fluid bed hydrogasifier to produce CH_4-rich gas. Deposited carbon is gasified in a gasifier with steam and oxygen to produce synthesis gas which provides H_2 to the hydrogasifier.	Gas from the hydrogasifier passes through waste heat boilers and then water scrubbers. Aromatics & oils are separated.	Same as coal gasification.						In developing stage.	Sulfur removal problems are similar to those for coal gasification.
Copyrolysis of Coal and Residuum (FMC Corp.)	For heavy hydrocarbon fuels and residuum.	Feedstock is heated in 2nd stage of gasifier (427 - 482°C) to remove volatility and passed on to the fractionator. Temp. in the 3rd and 4th stages are 538 - 650°C and 870°C resp. Gases from these stages are recycled back through the second stage.	Gas containing volatiles is washed with oil to separate oil, gas and liquor.	Same as coal gasification						In developing stage.	Sulfur removal problems are similar to those for coal gasification.
SEGAS Process (International Materials)	Uses dirty, heavy liquid fuels.	Process consists of "incremental" thermal cracking and simultaneous water gas shift reaction within a noncatalytic fixed bed. The various hydrocarbon components of the feedstock become successively cracked as the material advances through the externally heated bed. Coke that forms on the bed reacts with steam. The product gas is mainly CO+H_2. The feedstock is cracked and reformed at 980°C	Uses inter cooler and condenser.	Same as coal gasification						Pilot plant stage.	Sulfur removal problems are similar to those for coal gasification.
Gasification of Crude Petroleum or Heavy Feedstocks (Ube Industries Inc.)	Crude petroleum or heavy feed stocks.	The liquid feedstock is combined with oxygen and steam in a fluidized bed (alumina-based pellets) gasifier. The temp. of the system is about 850° C. 90% of the feed is gasified at this stage. Coke and heavy oils that leave first stage go to another gasifier which operates at 1100 - 1200° C., producing additional fuel gas.	Required	Same as coal gasification.						Large pilot plant being planned.	
Fluid Bed Hydrogasification - FHH (British Gas Council)	Uses any petroleum fraction or whole crude.	Preheated feed is atomized at the base of a bed of coke particles and fluidized by a H_2-rich gas. The hydrogenator is operated at 760°C and 64 kg/cm^2.	Aromatics are removed in Benzol absorber.	Same as for coal gasification						No large plants have been built but a small commercial unit with a 140,000 m^3/day capacity has been operated in Japan. Can be used for heavy oil gasification.	

Table II-6
Oil to Oil Conversion

Process Steps / Processes	Feedstock Limitations	Mix Oil and H_2	Hydrodesulfurize (P+T)	H_2S Removal	Sulfur Recovery	Technology	Comments on Pollution
Hydrofining (ESSO)	Can use resid (distilate) oils.	Mixed with H_2-rich gas bled from reactor and heated.	In fixed bed; regenerable catalyst. The liquid product stream is passed to separators 260-425°C and 5-57 kg/cm^2	In a stripper column. Acid gas clean-up of circulating H_2 required.	Required.	In commercial use. For all oil to syncrude conversion processes, sulfur removal becomes increasingly difficult for heavier factions due to higher metal content.	For low sulfur oils (lighter factions), H_2S is removed by Z_nO scrubbing. For high sulfur oils (heavier factions), H_2S is removed by amino-scrubbing followed by Claus or similar process.
RCD ISOMAX (UOP) and RDS ISOMAX (Chevron)		Required	Catalytic desulfurization in fixed bed.	Required.	Required.	In commercial use. Reactor plugging is necessitating addition of a quench system.	
Residfining (ESSO & Union)		Preheated in furnace and mixed with hot H_2-rich gas.	71 kg/cm^2. Oil is recovered in high and low, hot and cold separators. Most sulfur is removed by a hydrodesulfurizer.	Required.	Required.	In wide commercial use.	
H-Oil Process (Cities Service and Hydro Research)		Required	With cobalt-moly in ebbulent bed. Demetalation and desulfurization reactors are in series. Operates at 212 kg/cm^2	Required.	Required.	In commercial use.	
HDS Process (Gulf and Houdry)		Required	Fixed bed reactor. 57-212 kg/cm^2	Required	Required	In commercial use.	

Table II-7
Conversion of Oil-Bearing Minerals
(Tar-Sands, Oil Shale) to
Syn-Crude

Process Steps / Processes	Feed Separation	Retorting	Oil	Technology	Comments on Pollution
Petrosix (Cameron & Jones)	Finely crushed oil shale	Feed and recycled hot gas react by pyrolysis to form oil vapor. Spent ore is removed. The oil vapor is condensed.	The processing of oil to a clean syn-crude is identical to the "Oil to Syncrude" conversion.	In commercial use	Disposal of large amounts of waste material per bbl of syncrude may be problem.
Tosco-II Process (Oil Shale Corp.)	Crushed and screened oil shale is heated to 260°C. Heat is supplied by flue gas.	Rotating retort with 650°C hot balls (ceramic balls). The spent shale and balls are withdrawn, screened, separated; spent shale is disposed of; and balls are reheated. Hydrocarbon vapors are separated in a fractionator. H_2S and CO_2 are removed.	The processing of oil to a clean syn-crude is identical to the "Oil to Syncrude" conversion.	This is the only operating U.S. shale process. Similar technology is extensively commercialized by the USSR. The Tosco Process has been demonstrated at a rate of 907 m ton/day	Disposal of large amounts of waste material per bbl of syncrude may be problem.
Great Canadian Oil Sand Co. Process-G COS	Tar sand and water is heated in rotating drum. Gravity separates bitumin and sand. Bitumin is dehydrated in centrifuge.	In a delayed coker, hydrodesulfurized to yield H_2S.	The processing of oil to a clean syn-crude is identical to the "Oil to Syncrude" conversion.	In commercial use.	Disposal of large amounts of waste material per bbl of syncrude may be problem.
In Situ Thermal Process for Tar Sand	Tar sand is burned, in place, by forcing air into an injection well or heating with steam. Hydrocarbon vapors and bitumins are forced and collected in a production or recovery well.		The processing of oil to a clean syn-crude is identical to the "Oil to Syncrude" conversion.	None is in commercial use. The reaction is hard to control.	Eliminates spent sand handling problems.
In Situ Thermal Process for Oil Shale	Oil shale is fractured by pressure or explosion. Heat for retorting is accomplished by partial combustion of some shale with injected air, or other technique.		The processing of oil to a clean syn-crude is identical to the "Oil to Syncrude" conversion.	Conceptual phase	Underground retorting would avoid air pollution control.
Gas Combustion Retort Process (U.S. Bureau of Mines)	Crushed shale	Shale falls successively through preheating, retorting (450°C), combustion (927°C) and cooling (55°C) zones in a cylindrical retort. Air is supplied for combustion The suspended oil mist passes through centrifugal separators and an electrostatic precipitator.	The processing of oil to a clean syn-crude is identical to the "Oil to Syncrude" conversion.	Has been demonstrated on 330 m ton/day scale. An undesirable trait is that oil products drip back into the hotter sections where it is recracked.	Disposal of large amounts of waste material per bbl of syncrude may be problem.
Union Oil Process for Shale Oil (Union Oil Co.)	Crushed shale	Shale enters and is pushed up from the lower end of three vertical truncated cones against down flowing process gas. In a 4th retort, carbon residue in the shale is combusted with air (1205°C). Its product gas is separated from the oil and burned to preheat the N_2-rich recycle gas from the other three retorts (510°C)	The processing of oil to a clean syn-crude is identical to the "Oil to Syncrude" conversion.	Has improved thermal balance as compared to the Gas Combustion Retort Process. Has been demonstrated at a rate of 91 m ton/day.	Disposal of large amounts of waste material per bbl of syncrude may be problem.

Table II-8
Conversion of Oil Shale
to Gas

Processes \ Process Steps	Pretreatment	Hydrogasification	Quenching	Purification & Methanation	Technology	Comments on Pollution
Hydrogasification of Oil Shale (IGT)	Crushed	Crushed shale is fed to the top of a three stage hydrogasifier. In the 1st stage shale is preheated (538°-705°C) by counter current contact with reaction product gas. Preheated shale goes to a reaction zone where hydrogasification occurs. The spent shale passes through a 3rd gas preheat zone where spent shale serves to preheat the cold feed hydrogen. The pressure of the operation is in the range of 19-29 kg/cm^2.	Product from the hydrogasifier is quenched and liquid HC and gas are separated. Liquid HC can be fed back to the reaction zone of the hydrogasifier.	After quenching, the product gases are scrubbed to remove CO_2 and H_2S, and can be shifted and scrubbed again or methanated. The remaining gas, composed principally of $H_2 + CH_4$, can be separated into H_2-rich gas and CH_4-rich gas by cryogenic separation. H_2 is recycled to the hydrogasifier. The CH_4 is of pipeline quality.	Proven on bench scale. Pilot plant is planned.	Pollution problems are similar to those for coal gasification. Large quantities of spent shale must be disposed of.
	Many other oil shale to gas schemes are available. They can be derived by first converting feedstock to oil and then to a gas. Numerous combinations of "oil shale to oil" and "oil to gas" conversion processes (discussed separately) define the state-of-the-art.					

- Each clean-fuel conversion mode addressed in the classification matrix be represented (e.g., coal-to-gas, oil-to-gas)

- The process be commercially viable or likely to reach commercialization within ten years

- The selected processes exhibit the major pollution control problems expected to be faced by the fuel industry. These should include processes exhibiting novel pollution problems or control techniques.

Owing to the relative abundance of coal as a feedstock and the rapidly growing interest in coal gasification conversion processes, a disproportionate number of process selections were made from this category. Consequently, the planned investigation of oil-to-gas conversion processes was limited to the heavier oil feedstocks, omitting light and medium weight oil conversion schemes, since these heavier oil conversion processes are of greatest concern relative to removal of sulfur from the product streams.

The processes selected for detailed study, and the rationale for each selection are indicated in Table II-9. Each of these 12 processes: :

- The Synthane process
- The CO_2 Acceptor process
- The Lurgi process (High-Btu gas)
- The Hygas process
- The COED process
- The SRC process
- The Texaco Partial Oxidation process
- Desulfurization of Crude Oil
- The Gas Combustion Retort process
- The Lurgi process (Low-Btu gas)
- The Koppers-Totzek process
- The U-Gas process

is discussed in Section 2 of this report.

3. IDENTIFICATION AND ANALYSIS OF POLLUTION CONTROL PROBLEMS

This section summarizes the approach used in the identification and control of emissions from clean-fuel processes. The principal steps outlined are:

Table II-9
Selection of Clean-Fuel Processes for Detailed Study

Conversion Mode	Process Selected	Reason for Process Selection
Coal to gas	Synthane	• The Synthane process is typical of modern coal gasification processes • Pollutants generated are similar to those from most coal gasification processes • The product gas cleaning, purification and sulfur recovery steps are typical of most gas processes • Information about this process is readily available.
Coal to gas	Lurgi (High-Btu)	• The Lurgi gasifier is presently commercially available for the manufacture of high-Btu gas from coal • Detailed process information is available in the published literature • It exemplifies traditional gasification technology • It produces significant quantities of tars and oils which can cause wastewater purification problems.
Coal to gas	CO_2 Acceptor	• Uses novel technique for supplying the endothermic heat required to sustain the gasification reactions • Special pollutant removal problems are encountered • The process is now in the advanced pilot plant stage. It may soon be commercially available • It can have unusual wastewater problems.
Coal to gas	Hygas	• Hygas is currently the most advanced of the modern coal gasification processes • Most of the product gas is produced, without a catalyst, by direct hydrogasification
Coal to Gas	Lurgi (Low-Btu)	• The Lurgi gasifier is commercially available • An installation for the production of low-Btu gas exists • Serves as an example of a moving fixed-bed reactor
Coal to Gas	U-Gas	• Exemplifies one of the low-Btu gasification systems being developed using modern technology • Serves as an example of a fluidized bed reactor and the application of a combined power cycle
Coal to Gas	Koppers-Totzek (K-T) (K-T)	• The K-T gasifier is commercially available for the production of synthetic gas. It is readily adaptable for the production of low-Btu fuel gas. • Serves as an example of a high-temperature dilute-phase reactor.
Coal to Coal or Syn-Crude	Solvent Refined Coal (SRC)	• The SRC Process is probably the most developed of the various coal-dissolution processes. An advanced pilot plant is now being constructed • This process permits manufacture of either low-sulfur coal or syn-crude. Both options will be discussed.
Coal to Syn-Crude	Char-Oil-Energy-Development (COED)	• Has been in pilot plant production • It is representative of the type of process which converts coal feedstock to syn-crude by pyrolysis.
Oil to Clean Oil	Hydrodesulfurization (HDS)	• The common process for removing sulfur-containing compounds from hydrocarbon liquids is called hydrodesulfurization. There are many similar processes available for hydrodesulfurizing distillate oils and residuals. These can be operated at varying degrees of severity to achieve differing product oil sulfur content. Because of this complicating factor, the overall subject of hydrodesulfurization of fuel oils will be treated as a separate study. The HDS process developed by Gulf is representative and has information available. It is described as an example of hydrodesulfurization-type process mentioned in this study.
Heavyweight Oil to Gas	Texaco Partial Oxidation process	• The Texaco process, for the conversion of heavy crudes and residuals, has been installed commercially. • It has similar pollution control problems to other processes in this category.
Oil Shale to Gas and Oil-Bearing Minerals to Syn-Crude	Gas Combustion Retort process	• A pilot plant of significant size has been operated • It is typical of retorting processes • It addresses pollution problems that might be experienced with the retorting of coal. • This process can be used to recover oil directly from shale or, through inclusion of an oil gasification process, can manufacture gas.

- Identification of discharge sources
- Characterization of emissions
- Definition of control processes.

(1) Identification of Discharge Sources

Many of the selected processes have not been in commercial operation. During the process development and pilot plant stages, the emphasis was on "making the process work," rather than on protection of the environment. The small scale of operation usually meant that any discharges encountered were readily absorbed within the local pollution control system or assimilated by the surrounding environment without substantive or lasting harm. However, pollution control problems are now emerging as part of the overall effort to scale-up these processes to achieve commercial operation.

For these reasons, the available flow diagrams and associated descriptions of the selected processes were inspected with care to identify potential waste streams. In many cases, it was necessary to apply engineering judgment to project a discharge, where none was indicated by the process developer.

The sources of significant waste streams are identified within each process synopsis, both in the process flow diagram and in the process description. A summary listing of these sources, the nature of the waste streams, and manner of their disposition are presented in Table II-10. The sources are listed in approximate order of process flow. It is evident that the sources of waste streams are many and varied. In fact, there is hardly a step in any of the clean-fuel processes that does not represent a potential source of environmental pollution. Imaginative process design is required to channel these pollution streams to the best advantage of both the process and the environment.

(2) Characterization of Emissions

Characterization of the amounts and compositions of emissions proved much more difficult than the identification

Table II-10
Nature and Emissions of Major
Sources of Pollutants

Source	Waste Streams	Principal Components	Disposition	Process/Unit
Feedstock storage	Leachings and runoff	Pyrites	Treatment	Neutralization with lime
Feedstock cleaning	Rocks and debris		Disposal	Water washing, filtration
Feedstock crushing and grinding	Coal and shale dust	Carbon particles	Containment and recovery	Cyclone separators, bag filters, enclosure
	Coal fines	Coal particles	Recovery	
Water treatment	Wastewater	Dissolved salts	Treatment/utilization	Lime softening, zeolite treatment
Steam generation	Stack gas	See Table III-2	Treatment and discharge	Wellman Lord, limestone injection, lime scrubbing, catalytic oxidation
	Ash	See Table III-4	Disposal/utilization	Land filling/incorporation in construction materials
Stack gas cleanup	Stack gas	See Table III-2	Discharge	
	Sulfite sludge		Treatment and disposal	
Oxygen generation	Stack gas	Nitrogen	Discharge	
Gasification	Wastewater	See Table III-3	Treatment and reuse	Chevron, Phenosolvan, Phosam, oxidation, biological
	Tar	See Table III-4	Utilization	Conversion to oil, direct gasification, direct combustion, indirect combustion
	Char	See Table III-4	Utilization	Gasification, desulfurization, direct combustion
	Ash	See Table III-4	Disposal/utilization	Land filling/incorporation in construction materials
	Spent shale		Disposal	Minefilling
Wastewater treatment	Treated water		Reuse	
	Ammonia and phenol		Recovery	
	Hydrogen sulfide		Sulfur recovery	Claus, Stretford
	Solid sludge		Treatment and disposal	Dewatering, oxidation, landfilling
Ash ponds	Leachate, Drainage	Dissolved salts	Treatment and reuse	
Shift conversion	Acid-gas	See Table III-2	Sulfur recovery	Hot potassium carbonate, Rectisol, Sulfinol, MEA, DIPA, etc.
	Wastewater	See Table III-3	Treatment and reuse	Chevron, Phenosolvan, Phosam, oxidation, biological
	Heat		Recovery	
	Spent catalyst	Cobalt, molybdenum	Treatment and recovery	Oxidation
Sulfur recovery	Sulfur		Storage	
	Tail gas		Discharge or treatment	Incineration, Beavon, SCOT
	Spent catalyst	Bauxite	Disposal	
Methanation	Wastewater		Treatment and reuse	Chevron, Phenosolvan, Phosam, oxidation, biological
	Heat		Recovery	
	Spent catalyst	Nickel	Treatment and disposal	Oxidation
Final purification/drying	Vent gas	Sulfur dioxide	Discharge	
	Wastewater		Discharge, reuse	
	Spent iron or zinc oxide		Disposal	Oxidation, iron and zinc oxide treatment
Boilers and cooling towers	Blowdown water	Dissolved salts	Treatment and reuse	
	Steam		Discharge	
Heat exchangers	Cooling water	Heat	Utilization/disposal	Waste heat recovery
Washrooms and work areas	Sanitary sewage	Organic/nitrogen cpds.	Treatment and disposal	Biological
	Refuse		Treatment and disposal	Incineration/landfilling
Land surface	Surface runoff	Sediment, oil	Discharge	

of their sources. In the case of major waste streams, which have been defined by the process developer, it was possible to estimate efficiencies of the proposed control processes. In other cases, estimates had to be more qualitative, and were based on engineering judgment.

A detailed discussion of these emissions covering the nature of emissions, their estimated amounts, the mechanism of formation, the specific control problems, and the threat they pose to the quality of the environment, is presented in Chapter III. The accompanying tables illustrate selected compositions of gaseous, liquid, and solid waste streams, the sulfur balance of representative processes, and the sources and effects of major pollutants.

(3) Definition of Control Processes

The definition of pollution control processes was provided, in some cases, by the process developer and, in other cases, by the study team. The distinction is indicated by a dashed line on each process flow diagram. For each clean-fuel process, a discussion of the relative merits of alternative control processes and a detailed computation of the incremental costs of clean fuels attributable to pollution control measures are given. A general treatment of these topics is also presented in Chapter III. Table II-10 lists the major control and treatment processes for waste streams emanating from each of the major potential sources.

Four factors were considered in selecting alternative pollution control processes for application in the process synopses:

- Ability to meet applicable emission standards
- Suitability for the specific waste streams
- Demonstrated effectiveness in similar applications
- Life-cycle cost.

Since emission standards for clean-fuel processes have not been promulgated, similar existing standards were used as a guide. Assessment of the suitability of control processes for specific waste streams required both an evaluation of their past performance in related applications and an extrapolation of their

sensitivity to variations in waste stream composition. Incremental life cycle costs were computed in accordance with both the discounted cash flow and utility accounting methods, to accommodate anticipated differences in accounting procedures.

Finally, it must be noted that the proposed control processes are only conceptual. Firm decisions on their selection, sizing, and costs must await detailed engineering feasibility and design studies, which were clearly outside the scope of this study.

4. PROCEDURES FOR PREPARATION OF PROCESS SYNOPSES

The principal objective of the research program described in this report was to investigate alternative procedures for control of emissions from clean-fuel processes by analyzing in detail the 12 representative processes selected from those described in the classification matrix. This case study approach provides more detailed technical information than would an attempt to survey all the classified processes in a superficial way, but it did not permit every commercially feasible process to be analyzed. The results presented in Section 2 of the report can, however, be extended to provide some insight into the pollution control problems of processes closely related to those described in detail.

The general approach used in considering the process studies was to assign each process to a research team. One process (Synthane) was selected as a prototype, and the analysis of this process was completed first to establish an example for the research teams to follow. A uniform format was adopted for the presentation of information for each of the process descriptions, including the flow sheets, material and energy balances, pollution control alternatives and costs. This format not only ensures a consistent level of detail in the analysis but also simplifies the comparison of results from process to process. The processes' descriptions are divided into five sections as follows:

- Introduction
- Process display
- Process description
- Discussion of pollution control processes
- Costs of pollution control.

The information contained in each section and the approach used in preparing it are described in the following paragraphs.

(1) Introduction

Each process synopsis begins with a brief introduction in which the origin, state of development, and near-term plans for the process are described. In addition, significant features of the process which distinguish it from other clean-fuel conversion methods are indicated.

(2) Process Display

This section of each synopsis outlines the basis for the subsequent analysis and presents the assumptions made and the conventions adopted. The flow sheets and stream compositions are also given as well as an explanation of its layout format and symbolism.

The flow sheets were prepared detailing the unit processes used to convert each fossil fuel feed to a desulfurized fuel. Special emphasis was placed on describing the handling and disposition of chars, residuals and sulfur as well as on quantifying the sulfur and any saleable by-products derived from the pollution controls applied to each process. Where possible, effluent flow rates were also noted on the flow sheet. When more than one feedstock was analyzed, stream compositions were included for each feed.

In the process flow diagram, the general direction of flow is uniformly from the feedstock and ingredient supplies on the left to the product fuel on the right-hand side, with residuals shown along the bottom of the diagram (represented by inverted trapezoids). The flow path of the main process is always indicated by a bold line, with thin lines indicating secondary processes. A dashed line separates that portion of the process specified by the process developer from the portion suggested by the research teams for these analyses. In several cases, significant portions of the flow sheet were additions to the elements available in the literature or directly from the developer. Consequently these flow sheets must be viewed as schematic and not as representations of engineered systems. Sloping

rectangles denote pollutant cleanup units external to the main process, and rhombic-shaped units represent intermediate products and uses for which the source and distribution are not shown on the diagram.

Temperatures, pressures, flow rates, and sulfur contents are noted on each flow sheet where this information was available. More complete stream compositions and sulfur and energy balances for the overall process are reported in tables accompanying each flow diagram. All physical quantities indicated directly on the flow sheet or in the accompanying tables are reported in both metric and English units, shown in Table II-11.

Table II-11
Units Used in Process Display

Quantity	Metric Unit	English Unit
Mass	Ton (1000 kg mass)	Ton (2000 lb mass)
Volume (liquid)	Liter	Gallon, barrel
Volume (gas)	Cubic meter, m^3	Cubic foot, ft^3
Length	Meter, m	Foot, ft
Pressure	Kilogram (force)/square centimeter, kg/cm^2	Pound (force)/square inch (gauge and absolute), psig and psia
Temperature	Degrees Celsius, ^oC	Degree Fahrenheit, ^oF
Energy	Kilocalorie, kcal	British thermal unit, Btu

The assumed production rate, feedstock composition, process variations, and any other specific characteristics are indicated in explanatory notes accompanying each process display.

The approach used in obtaining the information presented in the flow sheets and balance tables given in this section of each synopsis and in the following sections on pollution control involved:

- Literature review
- Discussions with process developers
- Engineering judgments and estimations.

It was found repeatedly that published information on the processes studied was either incomplete or inconsistent. In these cases, process developers or licensors were contacted directly to obtain additional information. Although those contacted were typically very cooperative, it was not always possible to obtain the required data. In these cases, the research teams were obliged to include cleanup processes and/or to develop estimates of physical quantities based on experience with similar systems and applying informed engineering judgment and estimating techniques. The data presented in this report, though not always in agreement with that published elsewhere, represents the most up-to-date, accurate information available at this time (1973). All assumptions which have been made in developing a complete description of the pollution control system for each process have been stated explicitly and the portion of the process specified by the developer is always clearly indicated.

(3) Process Description

Brief descriptions of each major process operation are included in each process summary to indicate explicitly how the process feed is converted to a desulfurized fuel and how the major pollutant streams are separated, treated, recovered and disposed. The specific steps defined for each process are described and are keyed to the flow sheet given earlier. Sources of all pollutant streams are shown on the flow sheet and described in this section. A more complete discussion of the sulfur balance and total thermal energy balance calculated earlier is also included in each summary.

(4) Discussion of Pollution Control Processes

Each process summary contains a discussion of control processes or proposed systems to handle effluent streams generated or anticipated. Possible alternatives to these control systems are also presented. Procedures for disposal and/or utilization of process by-products in environmentally acceptable

ways are also described in this section of the synopsis. The generic pollution control unit processes selected are not discussed in detail in each clean-fuel process but instead are presented separately in Chapter III of this report. The feasibility of using alternate processes to minimize emissions is discussed in detail in this comprehensive review which is thus cited in each process summary. The approach used to obtain information and specific data on pollution control processes was similar to that used in analyzing the clean-fuel processes themselves. Data not available in the literature was obtained directly from process developers or was developed during the course of this study by the research teams assigned to each process. Each of the major waste streams previously identified in the Process Description section is discussed, and the control schemes applied to treat each stream are evaluated. Fuel waste streams, solid residues, and other pollutants escaping treatment are described, quantified and possible disposition suggested. The intent of this section of the process synopsis is to present sufficient detail to permit an assessment to be made of the potential pollution control approach which can be used and the problems which must be solved; however, as noted earlier, a complete optimization of the pollution control system for each process and each feedstock was well beyond the scope or intent of this study.

(5) Costs of Pollution Controls

In the concluding section of each process analysis, the economic costs associated with the cleanup unit processes selected for each scheme studied are calculated and presented. Two standard accounting procedures (Discounted Cash Flow and Utility Financing) were used in each case. The methodology for performing the cost analysis was developed at the beginning of the study and then applied uniformly to each process analyzed. The procedures for determining the costs of pollution control are described in detail in Chapter III of the report and are not repeated in each process synopsis.

The principal elements of the approach used in meeting the objectives of the research program have been described in this chapter. A case study approach was adopted in order to permit a reasonably detailed technical analysis of the pollution control problems associated with representative clean-fuels processes to be developed. The synopses which were prepared for each process selected are presented in Section 2 of this report. The following chapter includes discussions of several technical topics which are common to all the processes considered and serves as a reference for each synopsis.

III. DISCUSSION OF SELECTED TOPICS COMMON TO ALL PROCESS DESCRIPTIONS

There are several topics which are pertinent to all of the clean fuel process descriptions presented in Section 2 of this report. They include:

- Characterization of the pollutant streams emitted by the processes
- Description of the alternative processes available for pollution control
- Analysis of methods for integrating cleanup processes into the primary flow
- Development of the cost analysis methods used to compute the cost of pollution control for each process.

Rather than repeat essentially the same information for each of the processes considered, these topics are discussed in this chapter and reference is made to specific processes where appropriate. The process descriptions contain implicit reference to, and draw extensively from, the material presented here.

1. CHARACTERIZATION OF DISCHARGES

The development of emission standards for clean-fuel processes requires a detailed characterization of discharges from these processes, as well as a discussion of the effectiveness and costs of applicable control processes. The first of these topics is discussed in this section under the following headings:

- Sources
- Waste streams
- Sulfur and nitrogen emissions
- Trace elements

(1) Sources

The sources of significant waste streams from clean fuel processes are presented in Table III-1. For each source, the table gives the associated waste streams, their principal components, and manner of their disposition.

The sources of waste streams are many and varied. In fact, there is hardly a step in any of the clean-fuel processes that does not represent a potential source of environmental pollution. In designing the process, it is essential to recognize and characterize these sources, and then, to channel their waste streams to recover valuable materials and to minimize environmental impact.

The sources of waste streams can be grouped in four categories:

- Storage and preparation of feedstocks and other supplies
- Clean-fuel process operations
- Waste stream control and treatment processes
- Ancillary activities.

The first category comprises storage of coal and shale stockpiles, coal and shale cleaning and crushing operations, treatment of water supply to remove dissolved salts that would deposit in boilers or affect the process adversely, and generation of additional process supplies such as steam, oxygen, or hydrogen. These sources and their discharges are rather easy to characterize because the associated operations typically are well-known, and the pollution problems are relatively easy to correct.

On the other hand, the sources of discharges from clean-fuel process operations are very difficult to characterize because the commercial, "real world" versions of most of these processes exist only in reports of engineering feasibility and design studies. These reports, in turn, consist largely of extrapolations from process development and pilot plant experience, where the main

Table III-1
Nature and Sources of Major Waste Streams

Waste Stream	Principal Components	Sources	Disposition	Process/Unit	Ref.
Coal and shale dust	Carbon particles	Feedstock crushings & grinding	Containment and recovery	Cyclone separators, bag filters, enclosure	
Stack gas	See Table III-2	Steam generation	Treatment/discharge	Wellman-Lord, limestone injection, lime scrubbing, catalytic oxidation, double alkali, Citrate	
	See Table III-2	Stack gas cleanup	Discharge		
	Nitrogen	Oxygen generation	Discharge		
Acid gas	See Table III-2	Product of shift conversion	Sulfur recovery	H_2S can be selectively removed from a gas stream by a rectisol, hot potassium carbonate, Sulfinol, MEA, DIPA or similar process; Claus and Stretford processes recover elemental sulfur from H_2S-rich streams	
	See Table III-2	Wastewater treatment	Sulfur recovery	Tail gases from these units can be treated by incineration, Beavon, Wellman-Lord, or SCOT process	
Exhaust emissions	CO, HC, NO_x, particulates	Automobile traffic	Discharge		
Steam		Cooling towers	Discharge		
Runoff/Leachings	Pyrites, sediment, oil, organic matter	Feedstock storage	Treatment/utilization	Neutralization	
		Ash ponds	Treatment/utilization		
		Land surface	Discharge		
Wastewater	Dissolved salts	Water, treatment	Treatment/utilization		
	See Table III-3	Gasification	Treatment and reuse	Chevron, Phenosolvan, Phosam, oxidation, biological	
	See Table III-3	Product of shift conversion	Treatment and reuse		
	See Table III-3	Methanation	Treatment and reuse		
Blowdown	Dissolved salts	Boilers/cooling towers	Treatment and reuse		
Cooling water	Heat	Heat exchangers	Utilization/discharge	Waste heat recovery, cooling towers	
Sanitary sewage	Organic/nitrogen compounds	Washrooms	Treatment and disposal	Biological	
Rocks and debris		Feedstock cleaning	Disposal		
Tar	See Table III-4	Gasification	Utilization	Conversion to oil, direct gasification, direct combustion, indirect combustion	
Char	See Table III-4	Gasification	Utilization	Gasification, desulfurization, direct combustion	
Ash	See Table III-4	Gasification	Disposal/utilization	Landfilling/incorporation in construction materials	
	See Table III-4	Steam generation	Disposal/utilization		
Spent shale		Gasification	Disposal	Minefilling	
Spent catalysts	Cobalt, molybdenum, iron	Shift conversion	Treatment and recovery	Oxidation	
	Bauxite	Sulfur recovery	Treatment and disposal	Oxidation	
	Nickel	Methanation	Treatment and disposal	Oxidation	
Spent purifying media	Iron or zinc oxide	Final purification	Treatment and disposal	Oxidation	
Sludge	Activated carbon	Final purification	Disposal		
	Sulfites	Stack gas cleanup	Treatment and disposal		
		Wastewater treatment	Treatment and disposal	Dewatering, oxidation, landfilling	
Refuse		Work areas	Treatment and disposal	Incineration, landfilling	

emphasis was on "making the process work"; comparatively little attention was paid to potential sources of environmental pollution due to the limited resources made available for these studies.

Pollution control and treatment processes comprise principally those applicable to coal dust, stack gas, acid-gas, wastewater, char and tar, and heat. Inasmuch as these processes are bound by laws of conservation of mass and energy, their task is not to eliminate polluting substances but merely to convert them into a less offensive form, chemical species, or state of aggregation. These processes, however, are still capable of generating undesirable discharges that may be treated further or monitored to ensure compliance with applicable standards.

Finally, sources associated with ancillary activities catering to human sanitation and transportation needs are probably easiest to deal with because they are so common, and the solutions are so readily available. It is important, however, they not be left unattended in the effort to meet the more pressing requirement to control discharges from the clean-fuel process operations.

(2) Waste Streams

The major gaseous, liquid and solid waste streams associated with clean-fuel processes are listed in Tables III-2, 3 and 4. For each waste stream, these tables provide the principal components, typical sources, manner of disposition, control or treatment process. The particular processes are discussed in considerable detail in the individual chapters of Section 2.

The principal airborne waste streams comprise dust from handling and grinding of coal and shale, stack gas from the steam plant, and acid-gas from the primary process stream following the shift conversion operation. Coal dust can be controlled rather effectively by cyclone separators and filter bags and by enclosure of the feedstock preparation unit. Stack gas from steam plants fired by fuel gas or low-sulfur fuel oil can often be vented directly to the atmosphere without violating the current power plant emission standards. Control of acid-gas removal stages following CO shift conversion takes place in the

much more complex and costly sulfur recovery stage. Eventually the hydrogen sulfide is oxidized to free sulfur, which can be sold, while the carbon dioxide is vented to the atmosphere.

The liquid waste streams consist chiefly of runoff and leachings from coal and shale stockpiles, hot cooling water from heat exchangers, and wastewater from unit processes. The latter includes wastewater from gas scrubbers following the gasification stage and condensed moisture of the gas streams from the CO-shift conversion and methanation stages. Runoff and leachings would receive only minimal treatment, primarily to neutralize the acidic pyrites, before discharge; hot cooling water would be used to supply heat to other process units. However, proposed process wastewater treatment is again complex and costly and leads to recovery of ammonia and phenols, conversion of hydrogen sulfide to sulfur in the sulfur recovery stage, and recycling of the treated water to the scrubbers or cooling towers. A solid, inert sludge remains to be treated and disposed.

The solid waste streams consist of mineral debris, spent shale, ash, and sludge, as well as tars and chars. The former would be disposed in a landfill or an abandoned mine, while tars and chars can be used as fuel following treatment to reduce their high-sulfur content.

The potential amounts of major discharges from a plant producing 7.1×10^6 m^3/day (250×10^6 ft^3/day) of pipeline gas from Illinois No. 6 coal containing 3.7% sulfur are listed below.

Table III-2
Composition of Selected Gaseous Waste Streams
(Vol. Percent)

Source	Feedstock Preparation		Acid Gases											Sulfur Recovery	Steam Plant				
Disposition	Discharge		Sulfur Recovery									Discharge		Discharge	Cleanup	S Recovery			
Process	COED	CO_2 Accep.	Synthane	Hygas	Hygas	Lurgi	COED	COED	SRC	Texaco	Texaco	Hygas	Texaco	Lurgi	Synthane	SRC	Synthane	Texaco	Texaco
Feedstock	Utah Coal	N. Dakota Coal	Pittsburgh Coal	Montana Coal	Illinois Coal	Navajo Coal	Utah Coal	Illinois Coal	Kentucky Coal	Residual Oil	Residual Oil	Montana Coal	Residual Oil	Navajo Coal	Pittsburgh Coal	Kentucky Coal	Pittsburgh Coal	Residual Oil	Residual Oil
Product	Syn-crude	SNG	SNG	SNG	SNG	SNG	Syn-crude	Syn-crude	Coal	Synthesis gas	Hydrogen	SNG	Hydrogen	SNG	SNG	Coal	SNG	Synthesis gas	Hydrogen
H_2		0.17	0.1			0.75	1.30	1.3				0.45	0.20	0.38					
CO						0.41	0.77	0.7				0.03		0.15					
CO_2	13.98	22.06	93.6	70.00	70.0	95.45	89.32	75.3	27.55	69.70	54.42	97.90	91.58	83.83	17.3	15.99	17.3	11.72	12.36
CH_4		0.06				0.58	0.34	0.4				0.16	0.10	0.46					
C_2+		0.02				0.52	0.39	0.3				1.46		0.46					
COS				0.14	0.17						2.00	12 ppm	0.02						
SO_2		0.02													0.13	2.27	0.06	0.02	0.04
H_2S		0.01	1.5	29.86	29.83	1.05	1.88	22.0	72.45	21.84	42.05	5 ppm	5 ppm						
N_2	70.52	54.44				0.54					1.53		8.10	10.58	78.4	79.00	78.4	74.65	75.10
O_2		0.19												2.25	2.9	2.74	2.9	2.59	2.60
H_2O	15.50	23.03	4.8			0.70	6.00							1.89	1.3		1.3	11.02	9.90

Table III-3
Composition of Selected Liquid Waste Streams (mg/l)

Source	Gas Scrubber	Gas Scrubber	Acid-Gas Removal	Methanation	Gas Scrubber	Gas Scrubber
Disposition	Treatment	Treatment	Treatment	Treatment	Treatment	Treatment
Process	Synthane	Texaco	Synthane	Lurgi	Synthane	Synthane
Feedstock	Pittsburgh coal	Residual Oil	Pittsburgh Coal	Navajo Coal	Illinois Coal	Kentucky Coal
Product	SNG	Synthesis Gas or H_2	SNG	SNG	SNG	SNG
COD	19,000	5			15,000	19,000
DS		5,000			18,900	
SS	23				600	55
CO_2			13,000	50		
CH_4		10		170		
Phenol	1,700				2,600	3,700
NH_3	11,000	300			8,100	10,000
Cyanide	0.6				0.6	0.5
Thiocyanate	188				152	200
H_2S		25				
Sulfur			300			

Table III-4
Composition of Selected Solid Waste Streams (wt. percent)

Stream	Char			Tar	Ash		
Disposition		Utilization		Utilization	Disposal/Utilization		
Process	Synthane	COED	COED	Synthane	Hygas	CO_2 Accept.	SRC
Feedstock	Pittsburgh Coal	Illinois Coal	Utah Coal	Pittsburgh Coal	Montana Coal	No. Dakota Coal	Kentucky Coal
Product	SNG	Syn-crude	Syn-crude	SNG	SNG	SNG	Coal
C	71.4	73.4	85.2	77.4	10.2		3.95
H	0.9	1.3	1.1	7.0			
O	1.8	0.3	1.0	7.3			
N	0.5	1.2	1.4	–			
S	1.5	3.1	0.7	5.5	0.1	5.2	0.54
Ash	23.9	20.7	10.6	2.8			
Minerals					89.7	94.8	95.51
Yield (%)	30.5	52.9	46.5	3.5	8.1	0.7	6.7

The ranges in values are indicated by variations among different gasification processes and yield uncertainties.*

•	Sulfur	350-500 tons/day	318-454	m tons/day
•	Oils and tars	0-400 tons/day	363	m tons/day
•	Benzene	50-300 tons/day	45-272	m tons/day
•	Ammonia	100-150 tons/day	91-136	m tons/day
•	Phenols	10-70 tons/day	9-64	m tons/day
•	Hydrogen cyanide	0-2 tons/day	0-2	m tons/day
•	Mercury	5-10 lbs/day	2-5	kg/day

(3) Sulfur and Nitrogen Emissions

The principal contaminant of fossil fuels and the chief justification for clean-fuel processes are the compounds of sulfur which are converted to sulfur dioxide (SO_2) upon combustion. A portion of sulfur dioxide in the atmosphere is further oxidized to sulfur trioxide (SO_3) which then combines with moisture to form a sulfuric acid (H_2SO_4) mist. This mist corrodes exposed surfaces of buildings and other outdoor property, destroys the vital leaf surfaces of plants, and is thought to contribute considerably to the incidence of respiratory afflictions in humans and animals.

The sulfur in coal may be present in either organic or inorganic forms. The organic compounds consist primarily of sulfides, thiophene, and benzothiophene derivatives and constitute the principal sulfur fraction of low-sulfur coals. The inorganic sulfur is present principally as iron disulfide (FeS_2) in its mineral configurations of pyrite of marcasite, though lesser amounts appear as sulfates ($CaSO_4$ or $MgSO_4$). Pyritic sulfur is generally easier to remove than organic sulfur and is the major sulfur constituent of high sulfur coals.

* "Final Report, The Supply Technical Advisory Task Force - Synthetic Gas Coal," Federal Power Commission, April 1973.

The distribution of sulfur among the outputs of selected clean-fuel processes is reported in Table III-5 for various feedstocks, in terms of weight percent of each feedstock. It will be noted that in the case of coal gasification processes, over 75 percent of the original sulfur is recovered in elemental form. In general, the fraction recovered increases with the original sulfur content of the feedstock.

The next major contaminant of fossil fuels, after sulfur, is nitrogen which forms nitrogen oxides (NO_x) upon combustion, and ammonia (NH_3) upon hydrogenation. Ammonia can be further converted to toxic hydrogen cyanide (HCN) by reaction with hot coal. Nitrogen occurs primarily in the form of organic compounds such as pyrroles and pyridines. Its content in coals varies between one and two weight percent.

(4) Trace Elements

Trace elements are usually defined as those present in the earth's crust in amounts of less than 1000 ppm. Nearly all trace elements exhibit an enrichment in fossil fuels relative to their respective average crustal abundance, probably because they were accumulated by the vegetation from which the fuels were formed. Of the approximately 40 trace elements found in coal and oil, seven have been labeled hazardous because of their toxicity and volatility:

- Arsenic
- Beryllium
- Cadmium
- Fluorine
- Lead
- Mercury
- Selenium

Little is known at this time about the fate and distribution of these elements in clean-fuel processes. The EPA is currently evaluating this problem in a separate experimental program. The final results have not yet been published but the initial data is presented in document EPA-650/2-73-004, August 1973.

(5) Heat

The conversion of feedstocks to clean fuels and other useful products invariably involves some loss of energy. This energy

Table III-5*

Sulfur Distribution Among Outputs of Clean-Fuel Processes (Weight Percent of Feedstock)

Carrier \ Process Feedstock	Synthane Pittsburgh Coal	Synthane Illinois Coal	Hygas Montana Coal	Hygas Illinois Coal	CO_2 Acceptor North Dakota Coal	Lurgi Navajo Coal	COED Utah Coal	COED Illinois Coal	SRC Kentucky Coal	Gas Combustion Retort Colorado Shale	Texaco Partial Oxidation (Synthesis)	Texaco Partial Oxidation (Hydrogen)
											Residual Fuel Oil	
Coal									0.64			
Oil			0.007	0.005		0.005	0.005	0.03	0.01			
Tar	0.19	0.04				0.01						
Char							0.33	0.47				
Ash			0.005	0.03					0.04			
Spent Mineral										0.48		
Sulfur	1.19	2.65	0.48	3.86	0.45	0.66	0.14	2.80	2.43	0.10	6.10	6.07
Sulfur Dioxide	0.20	0.18	0.01	0.03	0.09	0.01			0.02	0.02	0.10	0.13
Sulfides	0.02	0.03			0.006	0.005		0.03				
Sulfates					0.04							
Total	1.60	2.90	0.51	3.93	0.59	0.69	0.47	3.33	3.14	0.60	6.20	6.20

*Ultimate disposition of the feedstock sulfur is presented in Table I-3. It is presented there as a percentage of the input sulfur.

loss can be ascribed to the combined values of heats of combustion of waste streams, sensible heats* of cooling water and product and waste streams, and heat lost to the atmosphere, either through direct radiation or through discharge of heated air or evaporation of cooling water.

The distribution of the heat of combustion of the feedstocks among the product and waste streams of the various processes is presented in Table III-6. For each process, the table lists the feedstocks, the product, and the percentage of feedstock energy retained by the various product and waste streams. The last row reports the combined heat losses through airborne and waterborne discharges. The specific calculations are shown under each process synopsis in Section 2 of this report.

It will be noted that the heat losses vary between 16 and 34 percent, while the fraction of heat of combustion retained in the clean fuels, also referred to as the energy conversion efficiency, fluctuates rather widely, depending on which products are regarded as "clean fuels."

* * * *

In concluding this section on pollutant discharges, it is appropriate to compare the discharge from a typical coal gasification process with those from a coal-fired electric power plant yielding the same quantity of product energy. Table III-7 makes this comparison. The sulfur emissions from a power plant meeting EPA new source performance standards for SO_2 are 30 times the total sulfur emissions from the coal gasification facility. Additionally, the power plant requires more coal, generates more solid waste and has higher thermal emissions.

2. ALTERNATIVE PROCESSES FOR POLLUTION CONTROL

The potential emissions generated in processes for clean-fuel production may be classified according to type:

- Noise
- Thermal
- Solids
- Liquids
- Gases

* Sensible heat is defined here as the heat given up by a substance in reducing its temperature to 16 degrees C (60 degrees F).

Table III-6
Distribution of Energy in
Clean-Fuel Products
(Percent of Feedstock Energy)

Process	Synthane	Hygas		CO_2 Acceptor	High-Btu Lurgi	COED (gas reform.)		SRC	Texaco Partial Oxidation		Gas Combustion Retort	Low-Btu Lurgi	U-Gas		Koppers-Totzek		
Feedstock	Pittsburgh Coal	Montana Coal	Illinois Coal	North Dakota Coal	Navajo Coal	Utah Coal	Illinois Coal	Kentucky Coal	Residual Oil		Mahogany Oil Shale	Navajo Coal	Pittsburgh Coal		Illinois Coal	Eastern Coal	Western Coal
Product	SNG	SNG	SNG	SNG	SNG	Syn-crude	Syn-crude	Coal	Synthesis Gas	Hydrogen	Syn-crude	Utility Gas	Combined Cycle Fuel Gas	Utility Gas	Utility Gas	Utility Gas	Utility Gas
Gas	64.0	60.1	60.4	59.2	56.2	4.4	3.8		79.9	69.3		66.5	73.2	79.3	69.8	74.6	73.2
Oil		6.5	3.7		5.1	31.8	23.0	7.4			74.7	4.1					
Coal/coke								67.2			6.5						
Char						47.5	51.3										
Tar	4.2				6.6							7.4					
Ash					1.6								4.4	4.1	Negligible		
Sulfur	0.3	0.2	1.3	0.3	0.3	0.04	1.0	0.8	1.3	1.1	0.2	0.3	1.3	1.3	1.7	0.3	0.2
Ammonia	0.5	0.2	0.6	0.6	5.1	0.16	0.2				0.7	1.0	Negligible				
Phenol		0.1	0.1		0.8			0.4				0.8					
Other products				10.4				1.0		3.5		3.8	6.6	3.3	4.5	0.9	1.2
Heat recovered	64.0	17.1	66.1	70.5	75.7	83.9	79.3	76.8	81.2	73.9	82.1	83.9	85.5	88.0	76.0	75.8	74.6
Cooling water	25.8	13.9	13.9	9.5	5.9	16.1	20.7	21.6	6.3	5.4		16.1	14.5	12.0	20.0	19.4	19.7
Other heat*	5.2	19.0	20.0	20.0	18.4			1.6	12.5	20.7	17.9				4.0	4.8	5.7
Heat loss†	31.0	32.9	33.9	29.5	24.3	16.1	20.7	23.2	18.8	26.1	17.9	16.1	14.5	12.0	24.0	24.2	25.4

* Obtained by difference: includes sensible heat of product and waste streams, heat of combustion of waste, streams, and heat lost directly to the atmosphere.

† Defined as the percent of heat of combustion of the feedstocks that is lost through heat of combustion of waste streams, sensible heat of cooling water and product and waste streams, and heat lost directly to the atmosphere.

Table III-7
Comparison of 250 Billion Btu/day Gas from Coal
with 3000 MW Electricity from Coal

Delivered Energy	Gas	Electricity
Product, Btu/day (kcal/day)	250×10^9 (63×10^9)	246×10^9 (62×10^9)
By-Products, Btu/day (kcal/day)	24×10^9 (6×10^9)	
Coal Consumption, short ton/day (m ton/day)	17,517 (15,891)	27,400 (24,857)
Thermal Emissions, Btu/day (kcal/day	140×10^9 (35×10^9)	401×10^9 (101×10^9)
Sulfur Emissions, short ton/day (m ton/day)		
SO_2	5.6 (5.1)	388 (352)
H_2S	0.12 (0.11)	
COS	5.55 (5.03)	
Total sulfur losses (as S)	6.05 (5.49)	194 (176)
Waste, short ton/day (m ton/day)		
Ash (dry)	2248 (2039)	3520 (3193)
Gypsum (dry)		5150 (4672)

Basis: Illinois No. 6 coal, 4.2 percent sulfur, 11,800 Btu/lb (6556 kcal/kg), 6-1/2 percent moisture; electricity generation at 38 percent efficiency, 1.2 lb $SO_2/10^6$ Btu, (2.2 kg $SO_2/10^6$ kcal); gas manufacture by the Hygas process.

The alternative processes available for control of these emissions are discussed in this section. Principal emphasis in the study was devoted to control of gaseous waste streams, particularly those containing sulfur. Hence the cleanup processes pertinent to these streams receive greatest attention.

(1) Noise

Noise pollution was not specifically studied in this program. The noise generated in these processes will be similar to that found in most chemical processes as generated by pumps, compressors, pressure relief valves, and so forth. Standard engineering practices can be used to control noise emissions.

(2) Thermal

The level of thermal pollution is inversely proportional to the process efficiency attained. The heat content of the products of the process is always less than that of the feedstock because energy was required for extraction and purification. This energy difference appears as heat lost through thermal discharges. In general, the efficiencies of these processes are quite high as compared with other forms of energy transformation. Typically, the coal gasification processes have overall efficiencies, including by-product credits, on the order of 55 to 70 percent, depending upon the process and the coal feedstock used. Therefore, the typical thermal discharges are on the order of 0.4 to 0.8 units of energy for each unit of clean energy produced. This may be compared with a modern nuclear power plant which operates at an efficiency of 30 to 33 percent, discharging two units of energy per unit of output. Fossil-fueled power plants are somewhat more efficient than nuclear plants (to 38 percent) but still produce a thermal discharge of 1.6 units per unit of output, double the emissions from the worst gasification facility.

The disposition of thermal discharge between air- and evaporative-cooling is typically not specified by process developers. Only the Lurgi gasification process, as designed for the El Paso Natural Gas Company, presents sufficient engineering data to evaluate evaporative losses. In this case, extensive use is made of air coolers, and less than 50 percent

of the thermal discharge is by evaporative cooling. The data presented for the Hygas process indicate a similarly low fraction of evaporative cooling, but this process has not yet been as thoroughly engineered as the El Paso project .

(3) Solids

The solid discharges from clean energy conversion processes may include the following:

- Sulfur
- Spent catalysts
- Gypsum
- Pyrites and dust
- Ash and rock
- Char

Though not all of these discharges will be produced in every clean-fuel process, each possible pollutant is discussed below.

1. Sulfur

A major function of most of the clean-fuel conversion processes is the elimination of sulfur from the feedstock. Usually, this will appear in the form of elemental sulfur as a by-product from the process. This solid discharge is the most environmentally attractive chemical form for the discharge of sulfur. Although the literature contains references to aerobic and anaerobic bacterial action on elemental sulfur, it is still the preferred form of discharge because it is relatively inert, occupies a relatively small volume, and is potentially saleable. It is expected that the market for elemental sulfur will continue to expand for the production of fertilizers, and that this by-product can be sold if competitively priced. The long-term storage capabilities of block sulfur are amply proved by the Frasch blocks in the southern United States. Alternatively, the sulfur may be disposed of as clean landfill or returned to the mine.

Most of the solid-based processes for the manufacture of clean energy will require substantial storage facilities for the feedstock. In general, a 30- to 60-day supply will be maintained to ensure continuity of plant operation. In general, this stockpile should not cause problems except, perhaps, in the case of some high-volatile subbituminous and lignite coals which are subject to spontaneous combustion. This problem has also been faced by the electric utility industry. The measures used to ensure plant safety, such as stockpile thermal monitoring, stockpile rotation, and water sprays, should also prove effective for the control of any sulfur emissions resulting from spontaneous combustion.

2. Spent Catalysts

A wide variety of catalysts may be used in the various clean energy conversion processes. These catalysts, whether used to promote a chemical reaction or used as final purification sorbents, deactivate with time or during plant upsets. Generally, catalysts must be replaced on a schedule of one or two years, although sorbents may require more frequent replacement. Some sorbents, such as metal-activated carbon or iron-oxide sponge will eventually become contaminated with elemental sulfur and, after possible pyrophoric tendencies have been eliminated by deactivation, may be discarded with the ash from the process. In most cases, however, the catalysts and sorbents will be returned to the supplier for reclamation. This study did not consider the regeneration techniques employed by the supplier for each of the various potential catalysts which might be used in clean-fuel conversion processes.

3. Gypsum

Most of the processes analyzed require steam and shaft horsepower that can be produced by burning a portion of the feedstock. In this case, the boiler stack gas must be desulfurized. Many stack-gas cleanup processes are currently under development; wet-lime scrubbing is

now considered by the EPA to be a proved process for this application. The primary by-product from this operation is gypsum, an inert solid which is composed of hydrated calcium sulfate. This gypsum will leave the process, together with unreacted limestone, as a thixotropic sludge (a gel becoming a liquid when agitated) which will pose handling problems. It will probably be disposed of with the ash from the system to either landfill, sludge drying beds, or minefill. The ash may stabilize the thixotropic character of the sludge.

4. Pyrites (Sulfides, e.g., FeS_2)

Many of the processes that operate on coal may function more efficiently if the coal is prewashed to reduce its sulfur content through pyrite separation. This operation will increase the quantity of product which can be made from the coal* but will reduce the amount of elemental sulfur by-product. The pyrites, which are eliminated from the coal in the washing operation, pose special disposal problems. When exposed to long-term action of air and surface water, the pyrites will decompose, forming ferrous sulfide and acidic liquor as characterized by acid-mine water. A satisfactory means for disposal of these pyrites is blending them with excess quantities of limestone which would neutralize any acid formed by weathering.

5. Dust

Any of the processes which use a solid feedstock will generate dust during crushing and grinding operations. The techniques for controlling this dust (such as negative pressure grinding, cyclones, baghouses, and spray rinses) are well known in the electric utility industry where grinding for cyclone furnaces has been practiced for many years.

---

* Hydrogen needed for clean-fuel production is not lost to H_2S formation.

6. Ash and Rock

The solid residues which were present in the feedstock for these processes are generally considered to be ash if they have very little heating value, as in the case of the Hygas, Lurgi, and Texaco Partial Oxidation processes. When large quantities of inert substances are present, as in the Gas Combustion Retort process, these residues are considered rock. On the other hand, when the carbon removal is not as complete, as exemplified by the Synthane or COED processes, the by-product is called char.

The ash and rock are relatively inert. Any sulfur remaining in the ash will be fixed into the carbon lattice as a stable material. The ash may have by-product value; for example, as concrete aggregate, paving material, or as an ingredient in cement block manufacture. More often, the ash will be disposed of as landfill or perhaps by returning to the mine.

Rock from the Gas Combustion Retort process for producing shale oil poses special problems. Large tonnages of oil-bearing shale must be processed to extract reasonable quantities of product, and the kerogen-depleted rock will not compact into the same volume as the original shale. In this case, the waste-product rock will more than fill the mine from which it was taken. It is assumed that, in the mountainous area where shale is found, remote canyons can be found for rock disposal. Aesthetics can be maintained by subsequent grading and landscaping efforts.

7. Char

The char from some of the clean-fuel manufacturing processes may contain significant carbon due to process operating conditions. The carbon should be recovered in the form of energy, but the residual sulfur must still be removed for environmental reasons. Recovery of the energy in char may also be necessary for the overall economy of the process. Substantial energy may be

required to make process steam or to operate an air separation plant for oxygen production. The overall efficiency of most processes is improved if the waste char is used to provide that energy.

Sulfur can be removed from the char either before, during, or after combustion. In this respect, the combustion of high-sulfur char is similar to the combustion of high-sulfur coal. Therefore, desulfurization efforts toward the clean combustion of coal are applicable, with modifications, to the environmentally acceptable utilization of char; however, the sulfur in the chars from these processes has not been characterized as to quantity or chemical composition since these are functions of the process operating conditions and the characteristics of the initial feedstock. Different sulfur characteristics in the char may eliminate some of the coal pretreatment processes currently under consideration; for example, the TRW Leaching process and the IGT Flash Desulfurization process. However, various chars may be amenable to new types of pretreatment because of the changed characteristics of the sulfur. Many of the process developers have been studying the problem of sulfur removal from char, as evidenced by the char desulfurization concept described in the COED process synopsis (Chapter VIII). The following discussion, however, is limited to sulfur removal processes that have been proved or are currently under advanced development.

The processes for sulfur removal during and after combustion of char would be quite similar to those under development for coal; for example, the sulfur may be removed by combustion in a bed of lime. Many processes are being developed to desulfurize stack gas from the combustion of coal; limestone injection, lime scrubbing, catalytic oxidation, Wellman-Lord, double-alkalai, and citrate processes, among others, are promising. According to the EPA, flue gas desulfurization is now a proven process for stack-gas desulfurization from the combustion of high-sulfur coal; it is assumed to also be satisfactory for char combustion.

The subject of char precombustion treatment also deserves attention. As mentioned above, many coal-treating processes may not be applicable to char; however,

chars can be gasified completely, making a fuel gas which can then be desulfurized and utilized. This approach was used by the El Paso Natural Gas Company in its application of the Lurgi process. In this case, fuel gas desulfurization used the same general acid-gas cleanup technique, including the same regenerator, that was employed for the primary gas-treating system. A Lurgi gasifier, using air as the oxidant, could, therefore, be used on most chars to produce a low-Btu fuel gas (approximately 200 Btu/ft^3 (1780 kcal/m^3), and a relatively clean ash which could easily be disposed.

The Hygas flow sheet depicts a low-Btu gas system (U-Gas) for steam production. Either the steam-oxygen gasifier of the Hygas system or the steam-air gasifier of the U-Gas system would be suitable for converting chars into consumable fuel gas and disposal ash. A Koppers-Totzek gasifier would also be applicable for this purpose. It operates at high temperatures so that all of the carbon and sulfur would be gasified, leaving a sulfur-free ash for disposal. Another alternative gasification technique would be the use of the bottom stage of the Bi-Gas reactor for the production of a low-Btu gas from char. Here again, the high-temperature slagging Bi-Gas reactor would consume all of the carbon and sulfur in the char, producing a clean ash. This unit of the Bi-Gas reactor could also operate on air rather then oxygen to produce a nitrogen-diluted fuel gas with low Btu content.

The COED process poses a special problem on handling chars. The quantity of char produced from the COED process contains much more fuel value than the energy requirements of that process. The process developers, the FMC Corporation, propose a lime-treatment system which will result in a low-sulfur solid fuel product; however, the volatile content of this char is low, so that it cannot be readily combusted. The COED system could be used in combination with a variety of other processes which could utilize the char. For example, the system could be operated in conjunction with an electric utility, the COED char could be gasified, and the resulting low-Btu fuel could be used either under boilers or as feed for gas turbines. Using the COGAS process developed by FMC, the char can be

gasified to produce methane. The COED char could also be steam-oxygen gasified and purified to make a synthesis gas, feeding ammonia manufacture, methanol fuel production, or fuel oil production by the Fischer-Tropsch reaction. Of course, all of these options were available for the initial coal feed, but the COED process extracts a liquid hydrocarbon product initially, an option that may be attractive for some process developers.

(4) Liquids

The liquid waste streams discussed will be categorized into aqueous or organic streams.

1. Liquid Waste Disposal—Aqueous Streams

Future clean-fuel production plants will operate much like modern oil refineries, and the wastewater disposal problems will also be similar. The primary wastewater streams for most of these systems will also resemble the quench water from coke ovens.

The term "wastewater," as applied to these facilities, is a misnomer. Although aqueous streams are generated in the processes, these streams can be treated and returned to the cooling water circuits, according to most process developers. For example, the cooling water requirements for a 250 million ft^3/day ($7.1 \times 10^6 m^3$/day) synthetic gas plant are approximately the same as those for a 600 megawatt (MW) power station. As in a modern power plant, the water is recirculated through cooling towers to near extinction. Perhaps a small sidestream would be withdrawn to evaporation ponds to eliminate a buildup of soluble salts, but there will probably not be an aqueous waste effluent to the local watershed from a modern, clean-fuel processing plant.

Contaminated aqueous streams are generated in the clean-fuel processes because product or effluent gases are either water-washed to remove soluble contaminants or are quenched for temperature control. A third potential source of an aqueous stream is from simple condensation of excess steam which might have been used in a

gasification process. The type and quantity of contaminants found in the washwater are functions of the chemical characteristics of the initial feedstock to the process, the type and severity of treatment in the primary clean-fuel unit process, and the type of subsidiary treatment upstream of the water-wash, quench, or cooling-condensation steps.

In general, contaminants of the following types might be found in an aqueous stream produced in a clean-fuel process:

- Particulate Matter. Fly ash and/or coal dust may be found in the aqueous stream, particularly if a hot gas is quenched directly after gasification. A prime example of this effect is found with the Koppers-Totzek gasifier which treats pulverized coal in a dilute-phase reaction. Solids might also be found in the overhead streams from other dilute-phase gasifiers or fluid-bed operations using fine coal feed. Similarly, partial-oxidation of residua can produce a fly ash or soot.

- Emulsified Tars and Oils. Many of the gasification processes produce tars and oils in varying amounts. They might emulsify into the aqueous stream if the gasifier effluent is directly quenched.

- Sulfurous Compounds. Most of the gas streams which are washed will contain sulfurous compounds (primarily hydrogen sulfide and carbonyl sulfide) which are water soluble. A small fraction of the sulfur in the gas will, therefore, be dissolved into the wash water. If ammonia is also present in the gas, this sulfur solubility increases.

- Nitrogeneous Compounds. If the initial feedstock to the system contains chemically combined nitrogen, as in the case of most coals and oil shale, the nitrogen will partially hydrogenate to ammonia in most clean-fuel processes unless the primary reaction occurred at very

high temperatures. The ammonia will be removed from the gas stream in the water wash.

Ammonia can react with carbon at high temperatures to form hydrogen cyanide according to the H-C-N thermodynamic equilibrium, and in fact, cyanide is reported in many gasifier effluents. This cyanide will dissolve in the aqueous stream if the gasifier effluent is quenched directly. It may also catalytically hydrogenate to ammonia over a shift catalyst if condensation and wash occur later in the processing scheme.

Some process developers report nearly quantitative conversion of hydrogen cyanide with hydrogen sulfide to form thiocyanates. Thermodynamics do not favor this reaction in a reducing atmosphere, but the conversion is rapid when the foul water is exposed to air.

- Phenolic Compounds. Aromatic-based feedstocks, such as coal, may produce small quantities of phenols and cresols during the primary treatment step if the processing conditions are not severe. These hydroxylated compounds are water soluble and will appear in the aqueous stream.

These aqueous streams are purified in the clean energy processes. The first processing step for foul water streams in most cases is pressure reduction by flashing. Much of the dissolved sulfur and carbon dioxide, together with desirable gas constituents, are released from solution in this step. The scavenged gas is usually repressurized and placed back into the primary process flow stream.

The next processing step involves solids removal. Conventional solids-liquid separation equipment, such as thickeners, clarifiers, and filters, can be applied. The API separator, a device that will remove floating oil

and insoluble solids simultaneously from the liquid, will probably find wide application on streams that contain insoluble matter. The solids from this system can be blended with the ash from the system for disposal, and any floating oil marketed with that by-product (as discussed later).

The remaining constituents in the foul water, with perhaps the exception of thiocyanates and ammonia, are subject to biological oxidation; however, processes are available for their recovery. The economics of the individual operation, with specific emphasis on the particular feedstock and primary process operation, will determine whether the by-products will be recovered or destroyed.

Phenols and cresols can be recovered by liquid-liquid extraction techniques, as is indicated in the Lurgi and Hygas process descriptions. The Lurgi process makes large quantities of phenols which might pay for the recovery process. The Hygas processing conditions, on the other hand, do not favor phenol production; phenol and oil recovery are employed simply to minimize the biological treatment of the final wastewater. The phenols, together with the extractable oils, have a high by-product value. For the process synopses presented in Section 2, a value of 4-1/4¢/lb was used for by-product phenol credit. This price is approximately one-half of the present market price for phenol because the by-product will require further upgrading for oil and sulfur removal by a cooperating refinery or specialty chemical manufacturer.

Ammonia is removed from the system by steam stripping. Processes, such as the United States Steel Engineers' Phosam process, are available to remove ammonia selectively from the stripped gas; the other constituents in the gas can be returned to the process. Alternatively, the ammonia can be recovered as a solution by selective stripping. Cyanide contamination should not be expected if it were quantitatively converted to thiocyanate by upstream oxidation in the presence of hydrogen sulfide. The product ammonia (either anhydrous from the Phosam process or in solution from selective stripping) should be a readily marketable by-product.

Wastewater after ammonia stripping will contain small quantities (in the order of several ppm) of sulfur, carbon dioxide, and cyanide. If phenol recovery were practiced, the wastewater would contain very little of these materials but will, however, contain most of the thiocyanates which might have been formed during the treatment processes. In general, this stream will be sufficiently pure to be a satisfactory input to the cooling-water circuit of the facility.

To further treat the wastewater stream and the effluents from boiler blowdowns, cooling tower blowdowns, and plant sanitary facilities, it is expected that many clean-fuel processes will employ biological oxidation.

2. Liquid Waste Disposal—Organic Streams

Many of the clean-fuels processes produce tars, oils, and BTX (benezene-toluene-xylene) by-product streams. The tars and oils have product value as fuel, but the BTX stream has increased value as a component of motor fuel due to its high octane rating.

A BTX stream is shown for both the Lurgi and Hygas processes. It is removed from the product gas in the first stage of treatment in a solvent-based acid-gas removal process. It has, therefore, passed through a quench system, which would remove the heavier oils, and the water-gas shift reactor. In both cases, the water-gas shift catalyst is also a hydrogenation catalyst so most of the sulfur-containing compounds in the remaining oils should be hydrodesulfurized. An analysis of the data presented with the Hygas process indicates that the BTX stream will contain perhaps 50 percent very light oil (similar to kerosene or No. 1 fuel oil), a small quantity of sulfur indicated as H_2S, and BTX. This by-product stream could be sold

to a cooperating petroleum refinery that would mix it with similar streams, and fractionate or solvent extract it for BTX recovery, thus completing the desulfurization process.

The tars and oils are differentiated only boiling point. In the Lurgi process, the tars are separted from the oils by condensation at an unspecified temperature. Of the processes described in this report, only the Synthane and Lurgi processes produce tars as by-products; however, the tars and oils produced as by-products from the gasification processes have characteristics similar to the liquid product stream from the COED process. They may also be similarly treated for recovery of their energy values (in an environmentally acceptable manner).

The primary contaminant in the tars and oils is sulfur. In the tars, the sulfur may exist in the form of organic sulfides, mercaptans, or thiophenes. The oils might contain similar compounds but with lower molecular weights, and, additionally, the oils might contain dissolved hydrogen sulfide and carbonyl sulfide. The inherent characteristics of the coal feed, and the techniques of primary treatment, will determine the total quantity of tars and oils, the relative proportion of tars and oils, and the quantity of sulfur contained in these organic liquid by-product streams. For example, the Lurgi process, operating on Navajo coal, produces a relatively large quantity of tars, but these tars contain sufficiently low sulfur to be burned directly for the recovery of their heating value. The relative quantity of sulfur in the tars is further illustrated by the two examples presented for the Synthane process. With an Eastern coal, the sulfur content of the tars is quite high (about 5 percent), but it is lower with a mid-continent coal.

The oils may be quenched from the gas stream either before or after the water-gas shift reaction stage. Those oils which are condensed after contact with the shift catalyst may be partially hydrodesulfurized because of the hydrogenation characteristics of this catalyst, but oils condensed before the shift reaction will also contain sulfides, mercaptans, and thiophenes.

Sulfur may be removed from both the tars and oils by hydrodesulfurization. These organic liquids exist in the raw gas stream because of coal pyrolysis and, therefore, they should be amenable to distillate hydrodesulfurization techniques as discussed more fully in that process synopsis. However, the tars and oils are the first materials quenched from the raw gas and may, therefore, contain particulates; residual HDS techniques, consequently, may be more applicable. After this treatment, the tars might be satisfactorily consumed by an electric utility which also burns No. 6 fuel oil. The oil fraction is more similar to No. 2 fuel oil which is generally consumed in homes and industry. It can be assumed that this hydrodesulfurization would not be performed onsite but, rather, the raw tars and oils would be marketed by a cooperating petroleum refinery for further upgrading.

The tars might be reinjected into the gasifier. In some overseas installations of the Lurgi gasifier, coal fines which are too small to be accepted by the fixed-bed unit are briquetted with the tars so that they may be gasified.* Similarly, the tars may be reintroduced into the gasifier by spraying in the top zones above the coal. In both these instances, the tars are eventually hydrocracked into lower molecular weight oils that are more marketable.

The tars may be gasified by partial oxidation, similar to the Texaco process. A low-Btu gas could be made by air oxidation to fulfill a portion of the process energy and steam requirements. It is understood El Paso considered this alternative for its Lurgi system but rejected it in favor of air-gasification of coal. The tars could also be oxygen-treated to produce a synthesis gas for reintroduction into the primary product flow stream.

---

* Briquetting is a relatively expensive operation, about $1/million kcal (25¢/million Btu), and is not planned for the Lurgi El Paso project.

Although the tars might be partially oxidized in a separate processing step, it should be possible to reintroduce the tars directly into the primary gasifier in the high-temperature zone, thus gasifying them directly. Gasifier modifications and operating techniques, required for this direct gasification, have not yet been developed.

(5) Gases—General Introduction

The primary gaseous pollutants generated in clean-fuel conversion processes are:

- Sulfurous compounds
  - Hydrogen sulfide (H_2S)
  - Carbonyl sulfide (COS)
  - Other reduced sulfurous compounds: for example, mercaptans (RSH), sulfides (RS), carbon disulfide (CS_2)
  - Sulfur dioxide (SO_2)
  - Elemental sulfur (S_2, S_4, etc. vapors).
- Carbon Oxides
  - Carbon dioxide (CO_2), not normally considered a pollutant
  - Carbon monoxide (CO).
- Light hydrocarbons
  - Methane (CH_4)
  - Ethane (C_2H_6)
  - Ethylene (C_2H_4)

- Traces of higher aliphatics and olefins
- BTX (benzene, toluene, and xylene vapors).

- Nitrogeneous compounds
  - Ammonia (NH_3)
  - Hydrogen cyanide (HCN)
  - Thiocyanates (SCN^-)

These gases exist as by-products in some processes (Gas Combustion Retort, Solvent-Refined Coal, HDS, and so forth), but they may be part of the main process flow in others. If they are by-product streams, the sulfurous and nitrogeneous compounds must be removed so that the by-product may be used as a fuel gas. When the gaseous stream is the primary product, the sulfurous and nitrogeneous compounds should be removed for pollution control purposes while achieving maximum recovery of hydrocarbons. If a high-Btu product is to be manufactured, the carbon monoxide and hydrogen will be converted to methane, but water vapor and carbon dioxide must be rejected from the system with minimum contamination by pollutants.

In general, therefore, the aims of gas purification can be listed as follows:

- Rejection of sulfurous compounds from the system, primarily as solid elemental sulfur with minimum evolution of gaseous sulfurous compounds.
- Rejection of nitrogeneous compounds from the system, preferably as by-product ammonia.
- If the gaseous stream is to be used directly for fuel value, water vapor and carbon dioxide need not be removed from the system. This will minimize hydrocarbon losses.
- If the gaseous stream is to be converted to hydrogen (for example, for HDS or hydrocracking feed gas), the carbon monoxide must be shifted to carbon dioxide. This carbon dioxide, in addition to

the hydrocarbons present, must eventually be removed from the system.

- If the product gas is to be used as a synthesis gas (for example, for manufacture of ammonia, methane, alcohol, or oils by a Fischer-Tropsch reaction), carbon dioxide and water vapor must be eliminated from the system and sulfur must be removed to very low levels to protect the sensitive downstream catalysts.

The most complicated purification steps are employed in the high-Btu gas manufacturing processes using coal. These are tabulated below:

- The majority of the water and oil vapors are removed by cooling and condensation.
- Water-washing is used to remove water soluble contaminants such as ammonia, cyanides, and phenols.
- Oil-washing is used to recover BTX and oil vapor.
- Special chemical sorption techniques are used to remove acid-gases such as H_2S, COS, HCN, and CO_2.
- Adsorption on special beds is used to eliminate trace quantities of pollutants.

The four processing steps that require the greatest attention for pollutant control are water-washing, acid-gas removal, sulfur recovery, and trace pollutant removal. These are discussed in detail below.

1. Water-Washing

Water-washing is used to remove ammonia, phenolic compounds, and cyanide from the primary gas stream. The treatment of foul water from the gas-scrubbing operation is not well defined in the processes studied in this report.

Only the HDS and Texaco Partial-Oxidation processes have been developed to the point where this problem has been analyzed; however, both of these processes operate on petroleum feedstocks with low nitrogen content and, therefore, yield little ammonia or cyanide. The Lurgi process, as designed for the El Paso Natural Gas Company, has been engineered for wastewater treatment and disposition of potential pollutants which would be condensed and washed out of the process gas. It has not yet been installed, however, so the operation of this section of the plant cannot be empirically verified. The flow sheet presented for the Hygas process indicates the techniques that would be used for wastewater treatment, but this system is not yet completely engineered. The remaining processes analyzed have not defined their wastewater treatment. This problem might well be an appropriate subject for an in-depth study, with particular emphasis on treating wash-liquors drawing on experience gained from dealing with coke-oven gases.

The phenols which are evolved in the primary reactor are water-washed from the process gas stream. They are recovered directly from wash water (as was discussed in an earlier section on wastewater treatment).

Ammonia was manufactured in the primary reaction stage of the process by the action of hydrogen upon the nitrogen in the raw material. Some oil feedstocks have essentially no nitrogen content, and ammonia will not be present in the product gas. On the other hand, the kerogen in shale is very high in nitrogen and will make considerable quantities of ammonia. Coal-gased systems will contain intermediate quantities of nitrogen and, therefore, similar quantities of ammonia in the product gas.

Hydrogen cyanide probably is not formed directly in these processes but rather is the product of a secondary reaction of ammonia and hot carbon. The quantity of this cyanide in the gaseous stream will be a function of the amount of ammonia that is present and in contact with the feed at temperatures hot enough to form cyanide.

In the Hygas and Lurgi processes illustrated, the water-wash follows the shift reactor. The catalyst in this reactor hydrogenates a large portion of the cyanide into ammonia. If the entire process stream passes through the shift catalyst, the cyanide treatment problem would be minimized because nearly all the cyanide would be converted; however, both these illustrated processes use a split-shift configuration. In this arrangement, part of the raw gas is bypassed around the shift reactor and the remainder of the gas is shifted. The resultant combination stream therefore contains some HCN that is removed in water washing.

As was discussed earlier, under liquid waste disposal, the cyanides can be converted to thiocyanates in the presence of sulfur in an oxidizing atmosphere. This conversion is not expected to take place within the primary gas stream, but it may take place in subsidiary streams in the plant.

The third major pollutant that may be removed by water-washing is phenol. In general, phenol and higher hydroxylated aromatics such as cresols, are formed directly during the devolatization of coal. Therefore, their occurrence in the gas stream is a function of the characterization of the coal feedstock utilized and the initial processing conditions employed.

The water wash will also dissolve some hydrogen sulfide, carbon dioxide, and carbonyl sulfide from the product gas as well as small quantities of hydrogen, carbon monoxide, and methane. Most of this material will be recovered from the water when it is flashed to atmospheric pressure. Additional sulfur is recovered when the ammonia liquor is steam stripped. In the Lurgi process an ammonia liquor with 20 percent NH_3 is recovered from the steam stripper and sold. Cyanides pass, with the acid-gas, to the sulfur recovery unit where the cyanides are converted into thiocyanates for disposal.

The Hygas process assumes complete stripping of the wastewater similar to a system used by United States Steel engineers in its treatment of coke-oven gas, leaving minute quantities of H_2S, HCN, and NH_3 in the water.

The overhead gases from the stripper are treated for recovery of anhydrous ammonia and then fed to an incinerator prior to arrival at the final sulfur recovery unit. Alternatively, the ammonia-free, scavenged gas could be recompressed and returned to the primary process gas stream, possibly before shift conversion to eliminate HCN from the system.

2. Acid-Gas Treatment

After the raw gas has been water-scrubbed to remove water soluble compounds such as ammonia, cyanide, and phenols, and perhaps oil-scrubbed to remove oily vapors from the gas, it undergoes acid-gas scrubbing to remove sulfurous compounds and carbon dioxide from the gas stream. In the case of gasifying coal to produce a high-Btu gas, the sulfur content must be reduced to very low levels to minimize poisoning of sensitive downstream methanation catalysts. Carbon dioxide must also be removed because it would dilute the product gas and compete with the carbon monoxide, in the methanation reaction, resulting in higher hydrogen consumption.

Acid-gas scrubbing may be employed before the water-gas shift reaction, if conventional, sulfur-sensitive shift catalysts are employed. Overall process efficiency may be improved if the newer, sulfur-tolerant shift catalysts are used because cooling and condensation, required before acid-gas treatment, is postponed until after the shift reaction and makeup high-pressure steam to the shift reactor is minimized. Carbon dioxide is also manufactured during the shift reaction. With this delayed acid-gas treatment, (after shift conversion), only a single stage of CO_2 removal is required.

The carbon dioxide, which is to be removed in the acid-gas treatment, is manufactured at several points of the process. In many processes, the endothermic heat of the steam-coal reaction is supplied by burning a portion of that coal thereby yielding some carbon dioxide (for example, in the steam-oxygen gasifier of the Hygas process). Some carbon dioxide is also generated in the primary

gasification stages and still other carbon dioxide is generated in the water-gas shift reactor by conversion of some of the carbon monoxide in the process gas stream.

The sulfurous compounds, to be removed during acid-gas treatment, are generated during the gasification of the coal. The primary purpose of most of these processes is to convert a high-sulfur fuel, such as coal, into a low-sulfur energy source, such as substitute natural gas. The sulfur which occurs naturally in the feedstock must be eliminated from the system.

The primary sulfur compound which exists in the process gas stream is hydrogen sulfide (H_2S). When carbon monoxide is present in the process gas stream, carbonyl sulfide (COS) will also be generated. If a portion of the process exists at relatively high temperatures, carbon disulfide (CS_2) will be formed. If the hydrogen and carbon monoxide concentrations in the primary reaction stage are approximately equal, the thermodynamically expected carbonyl sulfide concentration is about 1/30 of the hydrogen sulfide concentration, and the carbon disulfide concentration will be even lower. As will be shown later, however, hydrogen sulfide is more readily removed from the process gas stream than COS or CS_2. Therefore, the processing conditions which affect the manufacture and conversion of COS and CS_2 must be examined to determine the overall pollutant discharge from the facility.

Other forms of sulfur such as organic sulfides, mercaptans, and thiophenes, are also produced in the primary reaction step during the devolitization of coal. These heavier sulfur compounds will be collected with the tars and oils from the process and then be hydrodesulfurized as discussed earlier. The H_2S, COS, and CS_2 are the primary sulfur types to be found in the process gas as it reaches the acid-gas treatment section of the facility.

One of the major problems in all of the clean-fuel processes is accurate quantitative measurement of the sulfur. Sulfur compounds, particularly H_2S, tend to sorb onto metal surfaces, reducing the accuracy of the sulfur analyses. Therefore, the data presented in the

process synopses must be regarded as preliminary until the processes are demonstrated on a reasonable scale.

The initial carbonyl sulfide concentration might be one to five percent of the hydrogen sulfide concentration. This depends upon the H_2/CO ratio in the primary reaction unit, the operating temperature of that unit, and the kinetic approach to equilibrium in the H_2S-COS system. In the Lurgi, Hygas, and Texaco Partial Oxidation processes, the acid-gas treatment unit is shown to follow the shift-reaction stage. The shift catalyst used for these sulfur-laden streams is active for the H_2S-COS equilibrium;

$$COS + H_2 \rightleftarrows H_2S + CO.$$

The COS concentration should fall to about one to two percent of the H_2S concentration if the H_2/CO ratio is about 3:1. The Hygas and Lurgi flow sheets show this equilibration, but the Texaco flow sheet does not. If this catalyst is indeed active for the H_2S-COS system, the use of delayed acid-gas treatment (after shift conversion) will enhance the sulfur recovery from the process.

Two primary problems must be faced in the acid-gas cleanup unit:

- The sulfur must be removed from the process gas stream to very low levels in order to protect the sulfur-sensitive catalysts.
- The sulfur present in the regenerated off-gas from the system must be present in the proper concentration and form to permit economical recovery as elemental sulfur.

These two constraints work at cross-purposes in most acid-gas treatment systems; complete sulfur removal from the process gas requires high carbon dioxide removal. The sulfur concentration in the process gas is only about four percent of the carbon dioxide concentration after shift conversion; therefore, the resulting regenerated gas will be too lean in sulfur for economical operation of a conventional Claus system (discussed later) for elemental sulfur recovery. In these cases, the sulfur must be recovered by a technique similar to the Stretford process but the Stretford process does not remove COS or CS_2 from the gas (as discussed later in this section).

One approach to the problem of insufficient hydrogen sulfide concentration is the natural tendency of some acid-gas removal processes to absorb H_2S selectively over CO_2. This natural selectivity can be employed in a double-sorption system to recover a high-concentration H_2S stream for a Claus plant feed and a CO_2-rich stream for disposal. However, this approach also has shortcomings as will be discussed.

The following paragraphs discuss the alternative types of sulfur removal processes in general terms. The subject of elemental sulfur recovery via the Claus system is then presented, followed by a discussion of Claus off-gas purification for emission control and sulfur guards for removing traces of sulfur that would otherwise poison the sensitive downstream catalysts.

(6) Gases—Sulfur Removal Processes

Processes for removal of sulfur from acid-gases may be divided into four general categories according to their mode of operation:

- Physical solvents; some liquids have natural solvation capabilities for hydrogen sulfide and carbon dioxide
- Alkaline salt solutions; alkaline solutions will react chemically with the acid gases, permitting removal
- Amines; amines will react with acid-gases, permitting removal
- Indirect oxidation; some combinations of chemicals will absorb hydrogen sulfide and recover it directly as elemental sulfur by oxidation in the regeneration step.

Several other approaches have been suggested for acid-gas removal, but are not commercially applied.

1. Physical Solvent Processes

Physical absorption is the dissolution of an acid-gas in a solvent without undergoing any chemical transformation. Hydrogen sulfide and carbon dioxide are highly soluble in many organic solvents. These solvents can also remove COS, CS_2, and mercaptans; but unfortunately, they also remove some higher hydrocarbons, particularly aromatics, as well. Therefore, the regenerated gases which are produced by flashing these solvents to lower pressures may not be suitable for Claus-type sulfur disposal facilities, unless the solvent off-gases can be fractionated to recover these aromatics.

Some of the well known solvent-based processes are defined in Table III-8. In these processes, acid-gas is absorbed at elevated pressure and ambient temperature by countercurrent scrubbing with solvent. (The Rectisol process, however, operates at sub-ambient temperatures using refrigeration). The rich solvent is flashed at an intermediate pressure and the evolved gas, chiefly methane, is recompressed and returned to the absorber. Additional lower pressure stages of flashing may be used before the final stripping.

The solvent-based processes find their greatest application when system pressure is high. The solubility of the gas is approximately proportional to pressure, and solvent-based processes become economically attractive at high partial pressures of the acid-gases.

The solubility of hydrogen sulfide and carbon dioxide are not the same in the solvents shown in Table III-8. Usually hydrogen sulfide is significantly more soluble. Therefore, these processes often offer the option of concentrating the H_2S stream as a potential feed to a Claus unit. This may be accomplished by two-stage absorption where the first stage absorbs most of the H_2S with reduced CO_2 removal, or selective stripping may be used with a single sorption stage. The advantages of the solvent-based processes are:

High solubility of solvent for H_2S and CO_2

Table III-8
Solvent-Based Process

			Typical Treated Gas Purity		Attainable Treated Gas Purity	
Process	**Developer**	**Solvent**	**H_2S**	**CO_2**	**H_2S**	**CO_2**
Purisol	Lurgi	N-Methyl-2 pyrrolidone	4 ppm	2-3%	2 ppm	10 ppm
Fluor	Fluor	Propylene carbonate	Above 4 ppm	1-2%		
Selexol	Allied	Dimethyl ether polyethylene glycol	4 ppm	2-4%		0.5%
Rectisol	Lurgi	Methanol	3 ppm	60 ppm	1 ppm	10 ppm
Sulfinol	Shell	Tetrahydrothiopene 1-1 dioxide (Sulfolene) plus diisopropanol-amine (DIPA)	4 ppm	Below 0.5%	1 ppm	200 ppm

- Minimum consumption of heat, cooling, and power
- Minimum corrosion because of low temperatures
- Simultaneous removel of trace impurities such as HCN, COS, and organic sulfur compounds
- Excellent thermal and chemical stability of the solvents
- Possible selective recovery of H_2S.

Disadvantages of the solvent-based processes include:

- The solvent is costly, and losses must be minimized
- The impurity must have high partial pressure
- Thorough impurity removal is difficult
- High methane and ethane solubility adds recompression costs or potential loss of product
- Heavy oils (and water for some solvents) are readily absorbed, requiring changes to the process flow scheme or preremoval before treating.

2. Alkaline Salt Solution Processes

The use of alkaline salts, such as sodium or potassium carbonate, for the absorption of H_2S and CO_2, dates back to a German patent in 1804. The Seaboard and Vacuum Carbonate processes were developed, but the true potential of the carbonates was not realized until the Bureau of Mines performed an extensive study about 20 years ago. The hot potassium carbonate, or "hot pot"

process, is primarily utilized for the removal of carbon dioxide; H_2S is not removed from acid-gas unless CO_2 is also present. Hot carbonate processes are also restricted to high absorber pressures and high acid-gas content streams because the gases must physically absorb into the solution before they can chemically react. The CO_2 content of the treated gas stream may be as low as 0.1 percent, although 2 percent residual CO_2 content is usually practiced due to economic considerations. The residual H_2S content of the process gas may be as low as 10 ppm.

In this process, CO_2 and H_2S combine with potassium carbonate at temperatures of 80 to 120 degrees C (180 to 250 degrees F). Regeneration is accomplished by steam stripping the solution at the absorption temperature but at lower pressure. The small temperature difference between the absorber and the stripper results in lower utility requirements than many other processes. Capital costs are also reduced.

Proprietary processes, such as the Benfield, Catacarb, and Giammarco-Vetrocoke (CO_2), are based on catalytic improvements of the hot carbonate process. The catalyst increases the rate of absorption and stripping of solution, resulting in lower solution flow rates, lower heat requirements with better acid-gas removal, and a consequent reduction in capital costs for plant.

The hot carbonate processes offer one distinct advantage over the others discussed here: carbonyl sulfide and carbon disulfide are hydrolyzed during treatment;

$$COS + H_2O \rightleftarrows H_2S + CO_2.$$

Therefore, these compounds are converted to hydrogen sulfide which is absorbed by the solution. Only H_2S, therefore, is regenerated with the carbon dioxide. In the synopsis of the Texaco Partial Oxidation process, a "hot-pot" process was arbitrarily included in the flow sheet variation for syn-gas production, to show the effect of COS hydrolysis.

Another benefit of the "hot-pot" process is its natural partial selectivity. Benfield, a process developer, will design a two-stage treatment system which generates an H_2S-rich

gas which is a suitable feed for a Claus plant and a CO_2-rich gas claimed to contain only 50 ppm H_2S. The primary process problems are:

- Corrosion
- Erosion
- Foaming
- Solution degradation by formate* and sulphate formation

3. Amines

The best known regenerable acid-gas removal processes employ amines for the complexing of H_2S or CO_2 from the gas stream. These processes, introduced about 40 years ago, have been criticized because of their high heat requirements, corrosion problems, and foaming tendencies. Every new process introduced in recent years has been compared favorably to amines; yet amine processing continues to be the most common type of new acid-gas installation. Amine processing must, therefore, still be considered as a viable acid-gas removal system. Some of the active amine processes are defined in Table III-9.

In a conventional amine process, a 15 to 25 percent solution of monoethanolamine (MEA), or diethenolamine (DEA) in a water or glycol base is used to contact the acid-gas. The acid constituents are removed in a compound-complex formation, and the resulting solution is stripped of these constituents by heating. Advantages of the MEA process are high reactivity, low solvent cost, ease of reclamation, good stability, and low hydrocarbon content in the acid-gas produced. The plant investment is often lower than for other processes. However, the MEA process cannot satisfactorily process streams with

* A salt or ester of formic acid (CH_2O_2).

Table III-9
Amine Processes

			Typical Treated Gas Purity		Attainable Treated Gas Purity	
Process	**Active Component**	**Solution**	**H_2S**	**CO_2**	**H_2S**	**CO_2**
Amine	Monoethanolamine (MEA)	15% MEA in water	Below 4 ppm	100 ppm	1 ppm	20 ppm
	Diethanolamine (DEA)	25% DEA in water	Below 400 ppm		50 ppm	200 ppm
Economine	Diglycolamine (DGA)	50-70% DGA in water	4 ppm	100 ppm	4 ppm	100 ppm
ADIP	Diisopropanolamine* (DIPA)					

*Often used in conjunction with Sulfinol solvent

COS and CS_2 because of degradation of the MEA. It is also ineffective in removing mercaptans and has higher vaporization losses than other amine processes.

The DEA process has lower reactivity and higher solution cost than the MEA process but is resistant to degradation from COS and CS_2. Higher amines offer partial selectivity for H_2S over CO_2, but they have not generally been employed. More recently, diisopropanol amine (DIPA) has been offered which attains higher selectivity. Diglycolamine (DGA) is also available and may be operated at higher sorbent concentrations and, therefore, lower investment and utility costs.

In the process synopses presented in Section 2 of the report, MEA processing is used only in the purification of gases resulting from hydrodesulfurization of crude oils. In this operation, the oils are treated with pure hydrogen; therefore, the only sulfur compound in the off-gas is hydrogen sulfide for which MEA processing works satisfactorily.

Although DEA was originally specified as the acid-gas cleanup process for the Hygas process pilot plant, this system has now been converted to DGA. However, the Hygas process synopsis presented in Section II utilizes a solvent-based acid-gas cleanup system (discussed earlier).

Tertiary amines (TEA and MDEA) were used at the old Bureau of Mines' demonstration plant for coal gasification and liquefaction. They are still specified for purification for Koppers-Totzek process effluents but are not, however, used significantly in commercial installations.

Diisopropanol amine is used extensively in conjunction with the Sulfinol solvent process. The combination of solvent and amines apparently yields excellent acid-gas removal with a reasonable selectivity of H_2S over CO_2.

The amines remove some COS from the gas; however, their action is not a strict acid-gas reaction. For

some light amines, the COS-amine compound is stable, but with heavier amines, the amine can be reclaimed by hydrolysis at elevated temperatures, regenerating the COS as H_2S.

4. Indirect Oxidation Processes

A series of processes has been developed in recent years for acid-gas purification with elemental sulfur as the final product. In the indirect oxidation schemes, the hydrogen sulfide in the gas reacts selectively with some constituents in the scrubbing liquor and is removed from the gas stream. During regeneration, air is blown through the solution and sulfur oxidizes to the elemental form. It is collected as a froth on the top of the solution and recovered by filtration or centrifugation. Many of these processes have had limited commercial use in this country. Two processes that deserve consideration are shown in Table III-10. Process advantages claimed for these systems are that they:

- Treat the sulfur selectively
- Can usually remove the sulfur to low levels in the treated gas
- Produce an elemental sulfur product, eliminating the need for a Claus unit.

Table III-10
Indirect Oxidation Processes

Process	Solution	Treated Gas Purity	
		H_2S	CO_2
Giammarco-Vetrocoke	K_3AsO_3	1 ppm	May be removed
Stretford	Na_2CO_3 + Na_2VO_3 + organic oxidation catalyst	1 ppm	No change

They generally require a large reactor, however, because of low rates of sulfur reduction in the regenerator unit. The use of arsenic-containing solutions has, in some instances, posed drawbacks to the acceptance of some processes; insufficient removal of arsenic from the by-product sulfur renders it unfit for sale.

Another potential problem is the removal of COS and CS_2. Processes like Stretford are selective for H_2S removal. Thiosulfate formation is also possible and bleed streams would contain some high-cost vanadium catalysts.

(7) Gases—Elemental Sulfur Removal from H_2S Streams

The processes available to recover elemental sulfur from H_2S-rich gas streams and the treatment necessary to clean any tail-gases which may be present is discussed below.

1. The Claus Process

The conventional technique for disposal of the hydrogen sulfide stream from the acid-gas treatment is the Claus process. In this scheme, the H_2S is reacted with controlled amounts of oxygen over bauxite catalysts to form elemental sulfur. In some variations, one-third of the feed stream is burned to sulfur dioxide, and the remaining stream of H_2S is mixed with the SO_2 to provide the proper catalyst feed. In well-designed, multistage Claus units, sulfur removal efficiencies of 95 percent can be attained if the feed gas contains high-H_2S concentrations. Efficiency falls as the hydrogen sulfide concentration in the feed gas is decreased; for example, 80 to 89 percent efficiency is achievable at 10 percent H_2S concentrations in the feed, and 70 to 85 percent efficiency may be realized with 5 percent H_2S streams. Higher efficiencies are limited by the thermodynamics of the process. The sulfur is formed in the vapor state and the reversible process is governed by equilibrium.

The Claus unit feed must contain enough sulfur so that the heat of reaction is sufficient to sustain the flame. If the sulfur concentration is low, the problem is similar to trying to burn a fuel mixture which is too lean. Even direct addition of oxygen can be insufficient with an H_2S-lean feed because excessive amounts of CO_2 may quench the flame. This requirement for high-H_2S concentration in the Claus unit feed is the reason sulfur-selective purification processes have been stressed in the preceding paragraphs.

If possible, hydrocarbons should be eliminated from the feed to the Claus unit. Although these are burned to provide heat (and are occasionally added intentionally if the feed sulfur concentration is low), they also react with the sulfur in the gas to produce COS and CS_2. These compounds are not oxidized in the conventional Claus plant, although special, high-temperature stages may be added to the system to minimize COS losses. For these reasons, Claus plants are not generally satisfactory following many solvent-based acid-gas removal processes. The solvents also remove some hydrocarbons from the gas stream resulting in the same problems.

As was discussed in earlier paragraphs, hydrogen sulfide may be oxidized directly to elemental sulfur in the Stretford process. This system will operate on reduced concentrations of H_2S, below the range of a Claus system; however, the Stretford system cannot eliminate COS and CS_2 from the waste gas. Recent undisclosed process advances claimed by the licensor of the Stretford process should significantly reduce the cost of this unit process, and it may now be competitive with the total of a Claus plant with its necessary tail-gas purification unit.

2. Claus Tail-Gas Purification

The sulfur content in the effluent from a Claus unit may be relatively high. If the Claus tail-gas is incinerated, sulfur will exist in the stack gas as sulfur dioxide. Sulfur dioxide removal is now considered to be a viable process for power plant stack gases using limestone scrubbing.

However, other processes, discussed below, may be more desirable for purification of Claus plant tail gas.

The Wellman-Lord system has been satisfactorily applied to Claus plant tail-gas. In this scheme, the Claus effluent is incinerated, converting the reduced sulfides and elemental sulfur in the stream to SO_2. This sulfur dioxide is concentrated in a sodium sulfite-bisulfite system and regenerated, in a concentrated form, for feed back into the Claus unit.

At least three systems have been developed that operate on hydrogen sulfide, (for example, Beavon and SCOT processes). The total sulfur content of the Claus effluent is catalytically hydrogenated, using reducing gas, to hydrogen sulfide.* In two process variations, the H_2S is treated by a Stretford process while a third variation process uses a selective amine for H_2S recovery recycling it as Claus feed.

The licensors of all four of these Claus tail-gas purification processes claim that the effluent will be equivalent to less than 250 ppm SO_2. However, three of the processes might require incineration of the tail-gas before venting it to the atmosphere.

Several other processes have been developed to treat Claus off-gases. These other processes do not yet have the commercial experience of the four discussed above.

(8) Gases—Trace Sulfur Removal from Major Streams

Final purification processes to remove the last traces of sulfur from the main stream are discussed below.

1. Sulfur Guards

Trace quantities of sulfur impurities may be removed from the process gas stream by absorption of the surface or in the pores of some solid materials. These adsorption processes are usually performed with fixed beds of adsorbent.

---

* Apparently, the operating conditions do not promote the water-gas shift reaction, the hydrogeneration of CO_2.

When the adsorbent capacity to retain the impurity is reached, the adsorbent may be discarded or, more commonly, regenerated by heating. Usually, two beds of solids are used when regeneration is employed: one being used for adsorption while the other is being regenerated.

Sulfur guards will be required in all processes producing high Btu synthetic gas to protect the sensitive downstream catalysts. Even a few ppm of sulfur may poison these materials. For conventional methanation processes using nickel catalyst, catalyst lifetime will be about two years when the gas contains 0.07 ppm sulfur; but a catalyst life of five years or more is expected with sulfur-free gas.

2. Activated Carbon

To attain very low-sulfur concentrations, the process gas can be passed through a fixed bed of activated carbon which has been impregnated with certain metal oxides. Hydrogen sulfide as well as carbonyl sulfide, carbon sulfide, thiophenes, and mercaptans are removed by the carbon. When the capacity of the bed is reached, it is removed from service and regenerated with steam and air. Some elemental sulfur formed during regeneration accumulates in the carbon pores and eventually deactivates the bed. Therefore, after repeated adsorption-regeneration cycles, the impregnated carbon must be replaced with fresh sorbent.

3. Iron-Sponge Treatement

Iron-sponge treating may be the most economical sulfur recovery system if the process gas contains less than 300 ppm of sulfur and CO_2 removal is not necessary. Iron sponge is prepared by impregnating wood shavings with hydrated iron oxide. The mixture contains about 112 kg of iron oxide per cubic meter (7 lb/ft^3). Sponge is loaded into the treating chamber and process gas containing traces of impurities is fed at ambient temperatures. The bed moisture content is held at 30 to 50 percent and the pH is alkaline. At 100 percent efficiency,

0.64 kg (or lb) of H_2S will be removed per kg (or lb) of iron oxide. Spent iron oxide is often replaced with fresh material, although it may be regenerated by air oxidation.

The advantages of iron sponge treatment are that it:

- Completely removes even low concentrations of H_2S
- Is effective at any pressure
- Requires small investment

The disadvantages include the fact that it:

- Requires frequent change of spent sponge
- Is a batch process

4. Zinc Oxide Treatment

Zinc oxide has a special affinity for sulfur; the equilibrium partial pressure of hydrogen sulfide over zinc oxide is measured in parts per billion, even at elevated temperatures. Zinc oxide beds have been used for many years as the final step for trace sulfur removal from gas streams.

5. Caustic Washing

Washing the gas with caustic will remove sulfur compounds to extremely low levels. However, carbon dioxide is also removed in this process, so caustic washing is generally applied only when the CO_2 concentration is also quite low. This system is often used for final trace sulfur removal if there is a ready means of disposal of the spent caustic.

(9) Gases—Sulfur Dioxide Removal from Combustion Gases

The primary source of sulfur dioxide emissions in clean-fuel processes is from combustion. This combustion might occur in three major areas of the process:

- Power production—Raw or gasified and desulfurized fuel may be used for generating steam and electric power required for most of the processes considered. This fuel will contain some sulfur which will appear in the stacks as sulfur dioxide.

- Incineration—In some processes, sulfur-containing streams are incinerated to destroy combustible matter and convert sulfur to the more innocuous form of sulfur dioxide.

- Calcination—In the CO_2 Acceptor process, calcium carbonate is burned with gasifier char to regenerate the activated lime needed in the process. The char will contain small quantities of sulfur which will report to the stack gas as sulfur dioxide.

The calcination problem, in this study, is unique to the CO_2-Acceptor process and is discussed in detail in that process synopsis. General discussions of the other two sources of sulfur dioxide are presented below.

Incineration is specifically encountered in two of the process synopses. In the Lurgi system, incineration is specified for the off-gas from the Stretford unit which operated on the H_2S-rich stream of the acid-gas cleanup system. The discharge of the Claus plant, in the Hygas process, was incinerated along with a scavenged gas, prior to being fed to a Wellman-Lord sulfur recovery unit. Note that none of the process developers suggest incineration of the bulk CO_2 stream which may exist in the process.

The incineration practiced in the Lurgi process merely reduces the sulfur compounds and converts them to sulfur dioxide. The quantity of sulfur dioxide contained in this stream is small, well below an acceptable concentration for venting to the atmosphere, based upon permissible concentration of SO_2 in stack gases.

The sulfur concentration in the off-gas from a Claus plant is relatively high. Incineration is practiced, in this instance, if a Wellman-Lord system is used for the tail-gas cleanup process. As was discussed earlier, the Wellman-Lord system operates on sulfur dioxide, concentrating it for return to the Claus unit. The sulfur dioxide content of the effluent from the Wellman-Lord system is sufficiently low to be discharged to the atmosphere.

The primary source of sulfur dioxide emissions in these processes is the stack-gas manufactured during the production of steam and power for the facility. In some processes, such as Synthane, a gasifier char is burned directly for steam generation. The sulfur content of this char is relatively high and the stack gases from the power plant would contain an unacceptably high sulfur dioxide concentration. Consequently, stack-gas cleanup processes were applied in these cases to reduce the SO_2 emissions from the boilers to less than 2.16 kg SO_2/10^6kcal of the feed fired (1.2 lb $SO_2/10^6$ Btu), the present EPA New Source Performance Standard. It will be noted, in the process synopses, that stack gases are still the major source of sulfur emissions from the facility, even after application of approved cleanup processes to meet the specified effluent levels.

An alternative approach for power generation is the gasification of the char fuel and desulfurization of the fuel gas before combustion. This approach was specified in the Lurgi and in the Hygas process synopses. It was also applied in this study as an alternative means of power generation for the Synthane process and others. This technique reduces the sulfur dioxide emissions from this part of the plant by a factor of 10 and also increases the overall sulfur recovery from the facility. Gasification of the raw fuel and desulfurization of the fuel gas is the basic approach used for low-Btu gasification and combined-cycle power generation. It is expected to have significant application in future electrical power plants.

3. INTEGRATION OF SULFUR REMOVAL PROCESSES INTO THE CLEAN FUEL FLOW SCHEMES

The application of the alternative pollution control techniques discussed in the previous section to the clean fuels processes analyzed in this study varies from process to process. Some of the process developers have not included pollution control systems in their process designs, and it was necessary to apply an acceptable alternative in these cases. But it was not possible within the scope of the study to ensure that the choices made were optimum, from an economic and pollution control standpoint, for the waste streams considered. When process developers had specified a pollution control system in their design, the analysis of costs and material balances was made with that system.

The simplest sulfur-recovery system illustrated in the process synopses presented in Section 2 of this report is that for the treatment of the low-Btu gas produced by the Lurgi process. In this operation, the sulfur is removed directly from the gas by high-pressure treatment with a Stretford system. Carbon dioxide, carbonyl sulfide, carbon disulfide, and other organic sulfur forms are not removed by the Stretford process. The product gas, in this case, is consumed directly and the residual SO_2 concentration in the stack is a factor of 10 lower than the present Federal permissible emission levels, although this degree of control was required for the more stringent New Mexico standards. If the intent in this process was to make a high-Btu gas, the CO_2 must also be removed. The acid-gas treatment processes which would remove the CO_2, however, would also remove residual sulfur compounds. This could result in a sulfur concentration in the CO_2 vent gas of about 300 ppm. Even higher sulfur concentrations in this waste gas would be expected with higher sulfur-content feedstock or more efficient gasifiers that generate less CO_2.

The traditional route for acid-gas cleanup is illustrated in the HDS process. Here, only H_2S is manufactured during the hydrogenation of the sulfur compounds in the oil and this can be removed by MEA scrubbing. The H_2S concentration in the MEA regenerator off-gas is high, so a Claus system can be employed satisfactorily. After tail-gas purification, less than 250 ppm of sulfur compounds would be exhausted to the atmosphere.

The Synthane process illustrates the application of nonselective sulfur removal in the acid-gas system. In this case, a hot potassium carbonate system was used for simultaneous H_2S and CO_2 removal.

The off-gas from the regenerator of this system contains only 1.5 percent H_2S; therefore, a Stretford unit was used to recover this sulfur in the elemental form. A Claus unit would be highly inefficient given the low concentration of H_2S. In general, a Stretford may be expected to allow less than 250 ppm of sulfur compounds in its effluent or the total $COS + CS_2$ in its feed, whichever is greater. Much better performance might be expected in this instance because the only sulfur compound expected in the off-gas from a "hot-pot" process is hydrogen sulfide. Nevertheless, the process licensors' expectations of 99 percent removal (150-250 ppm) have been quoted. The quantity of carbon dioxide in this exhaust stream is very high, approximately 7.1 million m^3/day (250 million ft^3/day), so incineration would require expenditure of excessive fuel.

Both the Texaco partial oxidation process (for hydrogen generation) and the Hygas hydrogasification process employ selective sulfur recovery systems (two-stage, solvent-based systems). The operating conditions of the first absorption stages are set to achieve maximum sulfur removal. The sulfur concentration in the exhaust from this unit, therefore, is high enough to feed a Claus plant. In the second-stage of acid-gas treatment, the remainder of the carbon dioxide is removed with the residual sulfur. The H_2S-rich stream passes through a Claus unit, followed by tail-gas purification, and the CO_2-rich gas stream is vented. Although the CO_2-rich gas stream may contain very low H_2S concentrations (less than 10 ppm), the relative amount of carbonyl sulfide in these streams may be greater. As much as 50 to 80 percent of the total carbonyl sulfide may report to this CO_2 vent stream. Depending upon the sulfur level in the coal and the efficiency of gasification, this stream may contain several hundred parts per million of total sulfur compounds. Again, incineration would require significant quantities of energy because of the volume of this gas stream (perhaps three to five percent of the product gas).

The sulfur removal system designed for the Lurgi process also uses sulfur-selective solvent-based processes. The first stage of the two-stage system produces an off-gas containing slightly less than 10 percent sulfur. The total sulfur content of the CO_2-rich stream is about 0.75 percent. Both of these streams pass through separate Stretford units for H_2S recovery. The volume of the Stretford off-gas from the original H_2S-rich stream is low enough that it can be incinerated, but the volume of off-gas in the CO_2-rich stream is too high for incineration to be acceptable. Again, the Stretford process does not remove carbonyl sulfide; a COS concentration of about 80 ppm is exhausted with this vent stream. Higher COS concentrations would be expected if the initial coal feedstock contained more sulfur.

Rectisol process developers claim that the total sulfur content of its CO_2-rich stream may be reduced to 5 ppm, even when carbonyl sulfide is contained in the feed gas. Yet, when Lurgi process developers designed the plant employing this system, the effluent contained 80 ppm. The total cost of the Rectisol system in the Lurgi facility analyzed was about $55 million, or over 10 percent of the entire system cost. Perhaps the cost of the better system, for the purer off-gas, would have been significantly greater. It can be concluded that the cost of achieving really low-sulfur concentrations in the CO_2-rich gas from solvent-based processes might be extremely high.

None of the licensors of the processes investigated in this study have installed sulfur guards to eliminate the minute (ppm) quantities of sulfur vented to the atmosphere. A combination of reasons may be responsible for this decision:

- The permissible quantities of emission of reduced sulfur compounds have not been specified, and the effluents contain less sulfur than the permissible quantities of sulfur dioxide.

- The primary sulfur compound released is carbonyl sulfide, which is odorless; therefore, the facility will not create a nuisance problem. Similarly, toxicity factors for carbonyl sulfide are not established.

- The cost of maintenance of sulfur guards would be high, because approximately 0.9m ton (1 short ton) of iron oxide must be regenerated or replaced during each operating day if the off-gas contains only 50 ppm of sulfur compounds.

- The applicability and design conditions for the sorption of carbonyl sulfide on most standard sulfur guards are not well established.

* * * * *

The attached block flow diagrams illustrate several combinations of acid-gas treatment and sulfur recovery. Figure III-1 illustrates the simple acid-gas treatment system proposed for the Synthane process, followed by a Stretford process to recovery the elemental sulfur. Figure III-2 illustrates a novel approach suggested in the Lurgi process. In this case, the majority of the sulfur is removed in a pressure

FIGURE III-1
Simple Acid-Gas Treatment With
Sulfur Recovery as
Applied in the Synthane Process

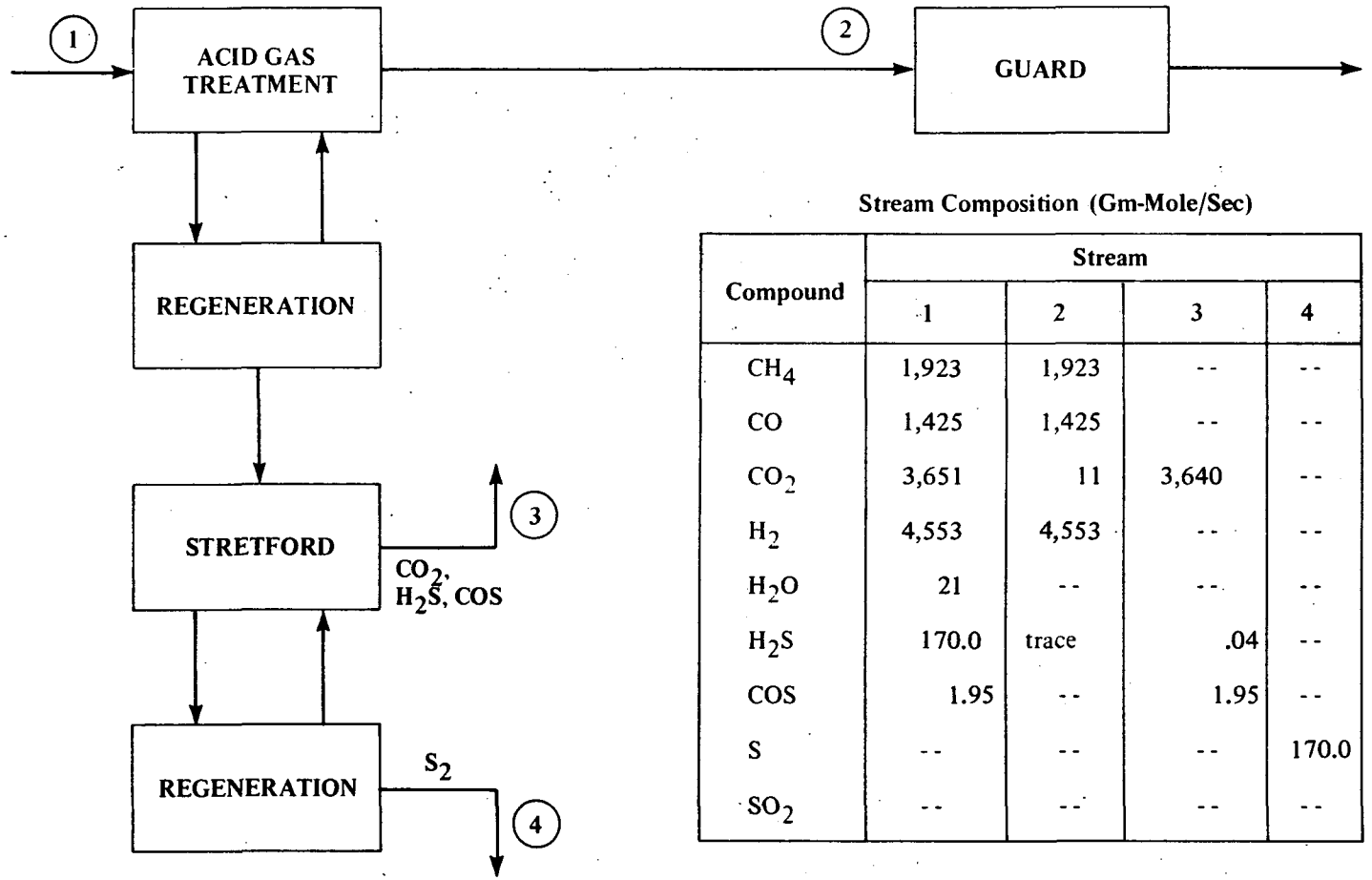

Stream Composition (Gm-Mole/Sec)

Compound	Stream			
	1	2	3	4
CH_4	1,923	1,923	--	--
CO	1,425	1,425	--	--
CO_2	3,651	11	3,640	--
H_2	4,553	4,553	--	--
H_2O	21	--	--	--
H_2S	170.0	trace	.04	--
COS	1.95	--	1.95	--
S	--	--	--	170.0
SO_2	--	--	--	--

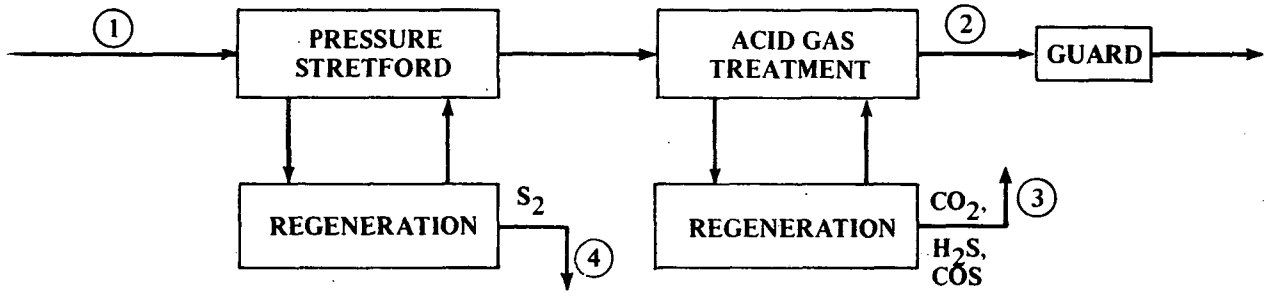

Stream Composition (Gm-Mole/Sec)

Compound	Stream			
	1	2	3	4
CH_4	1,923	1,923	--	--
CO	1,425	1,425	--	--
CO_2	3,651	11	3,640	--
H_2	4,553	4,553	--	--
H_2O	21	--	--	--
H_2S	170.0	trace	.08	--
COS	1.95	--	1.95	--
S	--	--	--	170.0
SO_2	--	--	--	--

FIGURE III-2
Two-Stage Acid-Gas Treatment as Applied in the Lurgi Process

Stretford unit, and a bulk conventional acid-gas treatment (e. g., Hot Potassium or Rectisol process) is used to recover the carbon dioxide from the system. Figure III-3 presents the two-stage acid-gas treatment system suggested in the Hygas and Texaco flow sheets. In this case, a light acid-gas treatment is used to recover the majority of the sulfur with minimum sulfur dioxide removal. The off-gas from this unit goes to a Claus plant for sulfur recovery. The second stage of acid-gas treatment recovers the majority of the carbon dioxide.

The stream compositions for the three treatment systems illustrated in these figures are based upon the composition of the Hygas system operating on high-sulfur Illinois coal. The carbonyl sulfide concentration is approximately 1 percent of the hydrogen sulfide concentration. In each case, the sulfur equivalent to the hydrogen sulfide concentration in the gas is recovered in the elemental form; however, most of the carbonyl sulfide is discharged to the atmosphere.

Note that the COS concentration in the raw gas is based only on thermodynamic considerations. The actual concentration in practice may be higher; hence the quantity of COS emitted with the CO_2-rich stream may also be greater.

In Figure III-1, nearly all of the acid-gas is stripped from the process stream. The Stretford process reduces the H_2S level in the regenerated gas to 10 ppm; the carbonyl sulfide, however, passes to the atmosphere. In Figure III-2, the pressure Stretford unit again reduces the hydrogen sulfide concentration of the process gas to 10 ppm, but leaves the carbonyl sulfide. These sulfur compounds are removed in the acid-gas treatment unit and report to the CO_2-rich effluent.* Slightly better performance is achieved in Figure III-3, where the carbonyl sulfide is divided evenly between the two acid-gas treatment sections; however, half of the carbonyl sulfide still reports to the CO_2-rich stream and is vented to the atmosphere.

On each of these flow sheets, a "typical" acid-gas treatment section has been assumed. Note that if a solvent-based treatment system were used, some methane and ethane would report to the CO_2-rich stream. If a hot carbonate system were chosen, the carbonyl sulfide would have been largely hydrolyzed to hydrogen

---

* In a Hot Potassium acid-gas system, the COS reported in stream 3 of Figure III-2 would have been regenerated as H_2S, but the overall sulfur emission is similar.

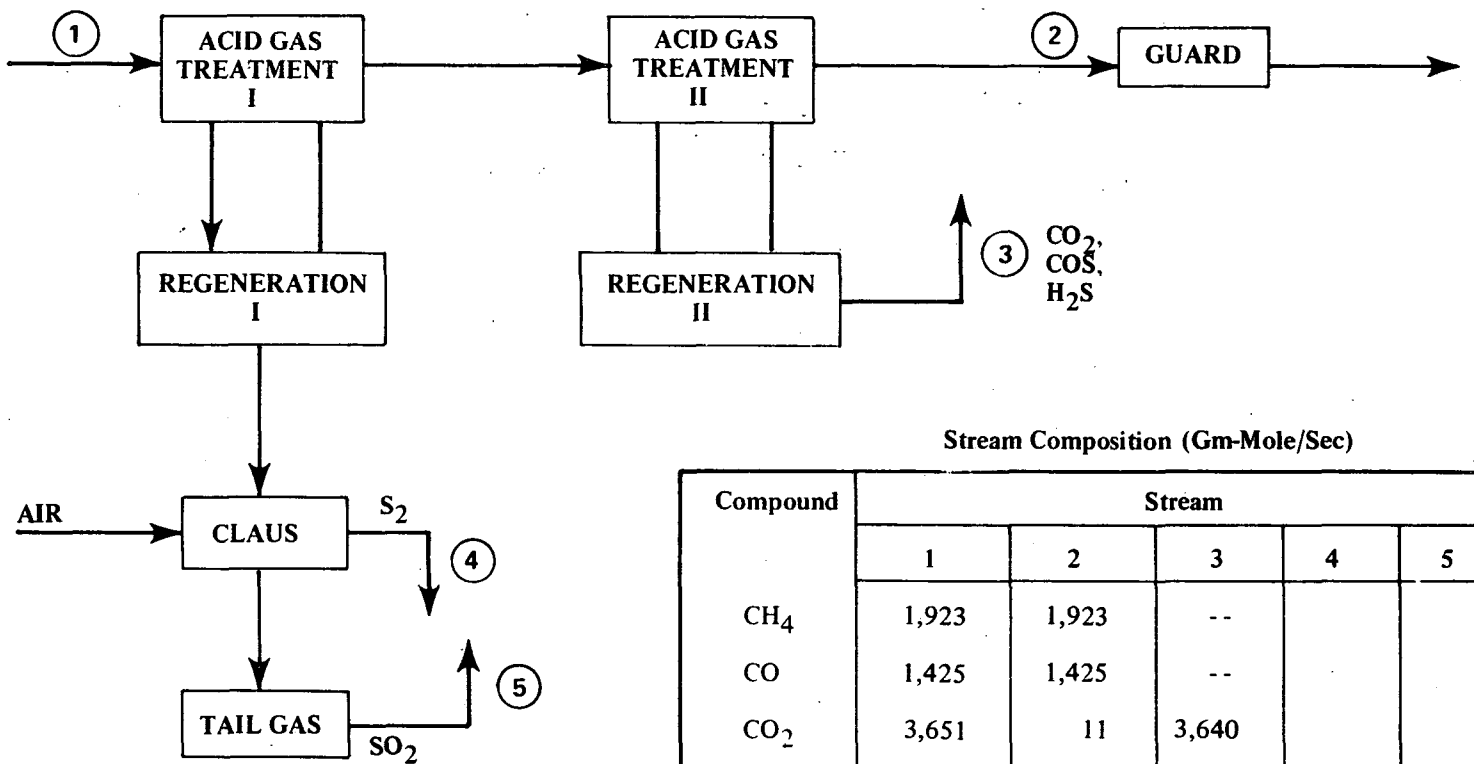

Stream Composition (Gm-Mole/Sec)

Compound	Stream				
	1	2	3	4	5
CH_4	1,923	1,923	--		
CO	1,425	1,425	--		
CO_2	3,651	11	3,640		
H_2	4,553	4,553	--		
H_2O	21	--	--		
H_2S	170.0	trace	.04		
COS	1.95	--	.97		
S			--	170.8	
SO_2			--		0.2

FIGURE III-3
Selective Acid-Gas Treatment with
Claus-Type Sulfur Recovery
As Applied in the Texaco and Hygas Processes

sulfide. In that case, Figure III-1 might have shown significantly lower sulfur concentration in this CO_2-rich gas, and Figure III-3 would have exhibited 50 ppm H_2S in this effluent according to the developers of the Benfield process. The clean-fuels processes which are in the most advanced stages of development however, do not employ hot potassium carbonate scrubbing. Perhaps undesirable side reactions occurring in this system have discouraged its application. If amine processes were used, the COS would form stable complexes with amines, requiring additional reclamation. Also, amine systems are known for high steam requirements, possibly the reason for their not being chosen in these processes. The processes in the most advanced stages of development all use solvent-based processes for selective acid-gas removal similar to that shown in Figure III-3. It has therefore been assumed that the complicated flow system, incorporating the Rectisol and Claus processes, is either less expensive, more reliable, or better proved than these other alternative schemes.

These brief analyses indicate that the COS in the raw gas causes the major contribution to sulfur emissions even though the initial COS concentration was very low. Exxon Research and Engineering Company, in its report to the EPA on the Kopper-Totzek process (EPA-650/2-74-009a, January 74), suggests that the COS can be catalytically hydrolyzed to H_2S. However, the initial reference quoted by Exxon (Hydrocarbon Processing, Vol. 52, No. 2, February 73, p. 81) used Claus-type feed gases without H_2 and CO present. In the clean fuel processes, a thermodynamic H_2-CO-H_2S-COS equilibrium must be overcome to hydrogenate the COS.

4. COST ANALYSIS PROCEDURES

The costs of the pollution control and treatment schemes described in each of the clean-fuel processes analyzed in this report were determined by applying each of two financial accounting systems: the discounted cash flow (DCF) and utility financing methods. Reasons for the selection of these methods and the derivation of incremental gas cost formulae for each are discussed in this section. It is emphasized that the costs presented in the process synopses of Section 2 are only preliminary estimates; the actual costs of emission control will not be known until these processing facilities have been constructed and operated.

(1) General Assumptions and Conventions

The assumptions and conventions used in the cost analysis were as follows:

- The format used for each of the financial accounting systems is based on that proposed in the Synthetic Gas-Coal Task Force Report to the Federal Power Commission, dated April 1973. Specifically, the formats used in computing capital and operating costs for clean-fuel plants are shown in Figures III-4 and III-5, respectively.

- Plant facilities were sized to generate approximately 250×10^9 Btu/day of clean-fuel energy, the daily production expected from similar commercial plants.

- Plants were assumed to operate at 90 percent of capacity continuously throughout the year. Scheduled plant turnarounds and emergency downtime account for the remaining 10 percent.

- The Federal income tax on gross annual income is assumed to remain at 48 percent.

- No escalation rate is assumed for operating costs in later years; current levels of wage rates are assumed throughout this study. If wages in the clean-fuel industry rise more rapidly than the inflation in the GNP, then the relative costs of pollution control computed in this report will also increase.

(2) The DCF Method

There are a number of reasons that the DCF method is an attractive approach for computing the incremental costs of pollution control in clean-fuels processes.

The DCF method of financial accounting considers both capital and operating costs simultaneously, using a present value approach. This minimizes the effect of misallocating costs between investment and operating capital requirements.

FIGURE III-4
Format for Calculating Incremental *
Capital Investment

	Cost ($ Million)		
Incremental plant investment			
On-site plant sections(1)	XXX		
Utilities and off-site sections(2)	XXX		
Contractor's overhead and profit	XXX		
Engineering and design costs	XXX		
Subtotal plant investment		XXX	
Project contingencies		XXX	
Process development contingency(3)		XXX	
Incremental plant investment (I)			XXX
Interest during construction (IDC)			XXX
Startup costs(4) (S)			XXX
Incremental working capital (W)			XXX
Incremental capital requirement (C)			XXX

Notes:

(1) Includes pollution abatement and recovery processes, and auxiliary on-site investments.

(2) Including water treatment, cooling towers, power generation and distribution, steam generation, site preparation, control houses, etc. required for pollution controls.

(3) Not required for processes already developed

(4) Based on capitalization of 40 percent of the full-rate gross operating costs during a six-month startup period. Assumes that 60 percent of the costs during the startup period are covered by revenue from gas deliveries.

* Incremental costs in this report refer to that portion of the total plant cost that is assignable to pollution control facilities.

FIGURE III-5
Format for Calculating Incremental
Annual Operating Cost

Labor	Cost ($ Million)
Direct operating labor	XXX
Maintenance labor	XXX
Supervision	XXX
Incremental labor cost	XXX
Administration and general overhead	XXX
Other direct costs	
Raw materials	XXX
Catalysts and chemicals	XXX
Purchased utilities (electrical power, (1) raw water, (2) cooling water)	XXX
Supplies	
Operating	XXX
Maintenance	XXX
Incremental cost of supplies	XXX
Local taxs and insurance	XXX
Incremental gross operating cost	XXX
By-product credits	
Sulfur	XXX
Ammonia	XXX
Light oil	XXX
Tar	XXX
Char	XXX
by-product	XXX
Less by-product credits	-XXX
Incremental net operating cost (N)	XXX

Notes:

(1) Includes allowance for cleanup of power plant stack gases.
(2) Includes cost of delivery to plant gate.

- This method permits comparisons of the incremental costs of the various processes analyzed by discounting all costs to the same point in time, the present.

- The DCF method is widely used in industry today to derive private investment financing requirements. Many clean-fuel processes are expected to be developed, contracted and managed in the private sector, and as a result the DCF method indicates the costs these firms will incur for pollution control.

In order to apply the DCF method in the computation of incremental pollution control costs for clean-fuel plants, several assumptions had to be made.

- Control equipment is funded with 100 percent equity capital valued at 12 percent per year.

- Pollution control plant facilities are depreciated using a 16-years sum-of-digits method, based on incremental plant investment.

- Project life is 25 years.

The derivation of the formulae for calculating the incremental cost of clean-fuel production due to pollution controls for the DCF method is presented in Figure III-6. The heading of each column explain the derivation of the results in that column. Letting the total discounted cash flow equal zero yields the required incremental annual cost of gas, X, for the assumed 12 percent rate of return. From the figure,

$$4.0784\,(X-N) - 0.97132I - 0.52S - 0.9412W = 0.$$

and solving for X yields

$$X = \frac{4.0784N + 0.97132I + 0.52S + 0.9412W}{4.0784}$$

or:

$$X = N + 0.23816I + 0.1275S + 0.230777W$$

This equation is used to compute the incremental costs of pollution control when DCF financing is applicable.

(3) The Utility Financing Method

This accounting method is based on a procedure developed in 1961 by the American Gas Association. It is currently being widely used as the primary basis for investment decisions made by public utilities. Most of the clean-fuel processes analyzed in this study will probably be funded in the public sector and operated by regulated utilities using this method.

The following assumptions were made to derive the cost relationships for the utility financing method:

- Project life of 20 years.* This is reasonable for the type of commercial plants which are likely to be built.
- The incremental capital investment (less working capital) is amortized on a straight-line basis.
- Debt/equity ratio is 75 percent/25 percent.
- The interest paid on debt is assumed to be 9 percent.
- Equity funding is valued at 15 percent.

Based on these assumptions an expression can be derived for the incremental cost of product fuel resulting from pollution control requirements. To facilitate the discussion, the following additional terms and symbols will be used:

n = 20 year project life - expected life of plant facilities
d = percent of debt capital
i = percent interest on debt
r = percent return on equity
Base Rate = incremental capital requirement less accrued depreciation (includes 1/2 year depreciation in the given year).

---

* The difference in project life assumed for DCF and Utility Financing reflects established accounting practice. The actual life of the plant may differ from both of these numbers.

The average annual cost of clean-fuel is computed from the sum of four terms which are derived as shown in Figure III-7.

The 20 year cost of clean-fuel

= the required return on capital investment	$= [id + r(1-d)]\ [20C - 10(C-W)]$
+ outlay for FIT	$+ \frac{48}{52} r(1-d)\ [20C - 10(C-W)]$
+ depreciation	$+ (C-W)$
+ net operating cost	$+ 20N$

$$= 20N + (C-W) + \left[id + r(1-d) + \frac{48}{52} r(1-d)\right] [20C - 10(C-W)]$$

$$= 20N + (C-W) + 10 \left[id + r(1-d) + \frac{48}{52} r(1-d)\right] (C+W).$$

The average annual cost of pollution control (X) is obtained by dividing the above expression by 20. The result is:

$$X = N + 0.05(C-W) + 0.5 \left[id + r(1-d) + \frac{48}{52} r(1-d)\right] (C+W)$$

for i = 9 percent, r = 15 percent and d = 75 percent, one obtains:

$$X = N + 0.05(C-W) + 0.5\ (0.105 + 0.0346)\ (C+W)$$

$$= N + 0.05\ (C-W) + 0.0698(C+W)$$

or:

$$X = N + 0.1198C + 0.0198W$$

This is the expression used in computing incremental pollution control costs for all processes considered assuming the utility financing method to be applicable.

(4) <u>The Incremental Cost of Clean-Fuel</u>

Having found the incremental annual cost of fuel (X) in \$/yr, and given the annual production rate as G (Btu/yr), the incremental cost of fuel, due to pollution controls, is expressed as $\$/10^6$ Btu by X/G.

The relationships derived and explained above are used to determine the incremental cost of producing each of the clean fuels selected for detailed study in Section 2 of this report.

FIGURE III-6
Derivation of DCF Equation for
Incremental Price of Clean Fuel

End Year	(A) Incremental Cost of Clean Fuel	(B) Incremental Net Operating Cost	(C) Depreciation	(D) (A) - (B) - (C) Taxable Income	(E) .52 x (D) Net Income After Federal Income Tax (FIT) of 48%	(F) Investment†	(G) (C) - (E) - (F) Cash Flow	(H) @ 12% Discount Factor	(I) (G) x (H) Discounted Cash Flow
0	O	S	0	-S	-0.52S	1.236761+W	-1.236761-0.52S-W	1.0000	-1.236761-0.52S-W
1	X	N	0.11761*	X-N-0.11761	0.52(X-N)-0.061151	0	0.52(X-N)+0.056451	0.8929	0.46431(X-N)+0.050401
2	X	N	0.1103I	X-N-0.1103I	0.52(X-N)-0.05736I	0	0.52(X-N)+0.05294I	0.7972	0.41454(X-N)+0.04220I
3	X	N	0.1029I	X-N-0.1029I	0.52(X-N)-0.05351I	0	0.52(X-N)+0.04939I	0.7118	0.37014(X-N)+0.03516I
4	X	N	0.0956I	X-N-0.0956I	0.52(X-N)-0.04971I	0	0.52(X-N) +0.04589I	0.6355	0.33046(X-N)+0.02916I
5	X	N	0.0882I	X-N-0.0882I	0.52(X-N)-0.04586I	0	0.52(X-N)+0.04234I	0.5674	0.29505(X-N)+0.02402I
6	X	N	0.0809I	X-N-0.0809I	0.52(X-N)-0.04207I	0	0.52(X-N)+0.03883I	0.5066	0.26343(X-N)+0.01967I
7	X	N	0.0735I	X-N-0.0735I	0.52(X-N)-0.03822I	0	0.52(X-N)+0.03528I	0.4523	0.23520(X-N)+0.01596I
8	X	N	0.0662I	X-N-0.0662I	0.52(X-N)-0.03442I	0	0.52(X-N)+0.03178I	0.4039	0.21003(X-N)+0.01284I
9	X	N	0.0588I	X-N-0.0588I	0.52(X-N)-0.03058I	0	0.52(X-N)+0.02822I	0.3606	0.18751(X-N)+0.01018I
10	X	N	0.0515I	X-N-0.0515I	0.52(X-N)-0.02678I	0	0.52(X-N)+0.02472I	0.3220	0.16744(X-N)+0.00796I
11	X	N	0.0441I	X-N-0.0441I	0.52(X-N)-0.02293I	0	0.52(X-N)+0.02117I	0.2875	0.14950(X-N)+0.00609I
12	X	N	0.0368I	X-N-0.0368I	0.52(X-N)-0.01914I	0	0.52(X-N)+0.01766I	0.2567	0.13348(X-N)+0.00453I
13	X	N	0.0294I	X-N-0.0294I	0.52(X-N)-0.01529I	0	0.52(X-N)-0.01411I	0.2292	0.11918(X-N)+0.00323I
14	X	N	0.0221I	X-N-0.0221I	0.52(X-N)-0.01149I	0	0.52(X-N)+0.01061I	0.2046	0.10639(X-N)+0.00217I
15	X	N	0.0147I	X-N-0.0147I	0.52(X-N)-0.00764I	0	0.52(X-N)+0.00706I	0.1827	0.09500(X-N)+0.00129I
16	X	N	0.0074I	X-N-0.0074I	0.52(X-N)-0.00385I	0	0.52(X-N)+0.00355I	0.1631	0.08481(X-N)+0.00058I
17	X	N	0	X-N	0.52(X-N)	0	0.52(X-N)	0.1456	0.07571(X-N)
18	X	N	0	X-N	0.52(X-N)	0	0.52(X-N)	0.1300	0.06760(X-N)
19	X	N	0	X-N	0.52(X-N)	0	0.52(X-N)	0.1161	0.06037(X-N)
20	X	N	0	X-N	0.52(X-N)	0	0.52(X-N)	0.1037	0.05392(X-N)
21	X	N	0	X-N	0.52(X-N)	0	0.52(X-N)	0.0926	0.04815(X-N)
22	X	N	0	X-N	0.52(X-N)	0	0.52(X-N)	0.0826	0.04295(X-N)
23	X	N	0	X-N	0.52(X-N)	0	0.52(X-N)	0.0738	0.03838(X-N)
24	X	N	0	X-N	0.52(X-N)	0	0.52(X-N)	0.0659	0.03427(X-N)
25	X	N	0	X-N	0.52(X-N)	-W	0.52(X-N) +W	0.0588	0.03058(X-N) +0.0588W
Totals	25X	25N+S	I	25X-25N-I-S	13(X-N)-0.52I-0.52S	1.236761	13(X-N)-0.7568I-0.52S		4.07840(X-N)-0.97132I-0.52S-0.9412W

*Sum-of-years-digits depreciation of the incremental plant investment is $\frac{n + 1 - \text{age of asset}}{n(n+1)/2}$ where n = depreciated life. For the first year it is 16/(16(17)/2) I = 0.11761.

†Capitalized costs in year 0 include incremental plant investment (I), return on investment during construction, and incremental working capital (W).

LEGEND

S Incremental startup costs
X Incremental annual cost of fuel
N Incremental net operating costs
I Incremental plant investment
W Incremental working capital

FIGURE III-7
Derivation of Utility Financing Equation
For Incremental Cost of Clean Fuel

End Year	(A) Required Rate of Return on Investment*	(B) Depreciation†	(C) Accrued Depreciation	(D) Capital Investment - (C) Rate Base	(E) (A) x (D) Return on Capital Investment	(F) Cost of Equity Funding x (D) Return on Equity	(G) $\frac{48}{52}$ x (F) Federal Income Tax (F.I.T.)	(H) Net Operating Cost‡
1	$id + r(1-d)$	$\frac{1}{m}(C-W)$	$\frac{1}{2}\left(\frac{C-W}{m}\right)$	$C - \frac{1}{2}\left(\frac{C-W}{m}\right)$	$\left[id + r(1-d)\right]\left[C - \frac{1}{2}\left(\frac{C-W}{m}\right)\right]$	$r(1-d)\left[C - \frac{1}{2}\left(\frac{C-W}{m}\right)\right]$	$\frac{48}{52}\, r(1-d)\left[C - \frac{1}{2}\left(\frac{C-W}{m}\right)\right]$	N
2	$id + r(1-d)$	$\frac{1}{m}(C-W)$	$\frac{3}{2}\left(\frac{C-W}{m}\right)$	$C - \frac{3}{2}\left(\frac{C-W}{m}\right)$	$\left[id + r(1-d)\right]\left[C - \frac{3}{2}\left(\frac{C-W}{m}\right)\right]$	$r(1-d)\left[C - \frac{3}{2}\left(\frac{C-W}{m}\right)\right]$	$\frac{48}{52}\, r(1-d)\left[C - \frac{3}{2}\left(\frac{C-W}{m}\right)\right]$	N
⋮	⋮	⋮	⋮	⋮	⋮	⋮	⋮	⋮
y**	$id + r(1-d)$	$\frac{1}{m}(C-W)$	$\left(y - \frac{1}{2}\right)\left(\frac{C-W}{m}\right)$	$C - \left(y - \frac{1}{2}\right)\left(\frac{C-W}{m}\right)$	$\left[id + r(1-d)\right]\left[C - \left(y - \frac{1}{2}\right)\left(\frac{C-W}{m}\right)\right]$	$r(1-d)\left[C - \left(y - \frac{1}{2}\right)\left(\frac{C-W}{m}\right)\right]$	$\frac{48}{52}\, r(1-d)\left[C - \left(y - \frac{1}{2}\right)\left(\frac{C-W}{m}\right)\right]$	N
Sum of y years		$\frac{y}{m}(C-W)$			$\left[id + r(1-d)\right]\left\{yC - \sum_{1}^{y}\left[\left(y - \frac{1}{2}\right)\left(\frac{C-W}{m}\right)\right]\right\}$		$\frac{48}{52}\, r(1-d)\left\{yC - \sum_{1}^{y}\left[\left(y - \frac{1}{2}\right)\left(\frac{C+W}{m}\right)\right]\right\}$	y N
Sum of 20 years (y = m = 20 years)		C - W			$\left[id + r(1-d)\right]\left[20C - 10(C-W)\right]$		$\frac{48}{52}\, r(1-d)\left[20C - 10(C-W)\right]$	20N

* Weighted average of cost of debt and equity funding respectively

† Straight-line depreciation including $\frac{1}{2}$ years depreciation for given year

‡ Excludes escalation of operating costs in future years

** Any given year

SECTION 2

IV. THE SYNTHANE PROCESS

The Synthane process has been under development by the U.S. Bureau of Mines (USBM) since 1963, at the Pittsburgh Energy Research Center in Bruceton (14 miles south of Pittsburgh). The process is designed for the conversion of bituminous and sub-bituminous coal and lignite into sulfur-free substitute natural gas (SNG). The primary effort reported here has been directed at the 1.6 percent sulfur Pittsburgh seam coal and the 2.9 percent sulfur Illinois No. 6 coal. The process can be modified to use air instead of oxygen to produce a low Btu gas.

The first USBM unit was evaluated by the M. W. Kellogg Company; Hydrocarbon Research, Inc., was engaged to develop a commercial process design. Designs for a 68 m ton/day (75 short tons/day) pilot plant to be constructed in Bruceton were completed by the Lummus Company in 1972, and the construction contract has been awarded to the Rust Engineering Company.

The purpose of the $14 million plant will be to provide information on technical feasibility and costs of a commercial installation. It will feature a 71.3 kg/cm^2 (1000 psi), 1.2 m ID gasifier capable of generating 34,000 m^3/day (1.2×10^6 ft^3/day) of gas. Completion and start-up tests are scheduled for September 1974.

1. PROCESS DISPLAY

The Synthane process has recently been modified to include external pretreatment of the coal. This modification was too new for information to be available for this process synopsis.

The flow diagram and tabulations of associated mass and energy balances for the prototype Synthane coal gasification process are presented in Figure IV-1.

(1) Basis for Analysis

- Process display is for a 1.6 percent sulfur Pittsburgh seam coal, but estimated sulfur emissions from a 2.9 percent sulfur Illinois coal are also reported, where available.

- Production rate is 7.08×10^6 m^3/day (250×10^6 ft^3/day) of gas, containing 58.41×10^9 kcal (231.8×10^9 Btu), from 12,930 m tons/day (14,250 tons/day) of coal, containing 91.22×10^9 kcal (362.0×10^9 Btu), yielding a coal-to-gas thermal efficiency of 0.640.

(2) Layout and Symbols

The general direction of process flow is from the coal and water supply on the left to the product gas on the extreme right of the flow diagram, with residuals shown along the bottom. The bold line indicates the flow of the primary gasification process. Portions of the flow diagram enclosed within the dashed boundary were specified by the U.S. Bureau of Mines; the remaining steps are proposed for the present analysis.

The figures in circles and triangles refer to the stream composition tables in the lower portion of the figure. Figures in brackets report the sulfur flow rate in short tons per hour, for the 1.6 and 2.9 percent sulfur, respectively. Other figures and tables are self-explanatory. The overall energy balance is shown to the right of the material balance tables.

Rhombic-shaped units represent intermediate products, uses, and sources, for which the distribution is not shown. Nonintegral pollutant cleanup processes are indicated by sloping rectangles. The treatment and recovery processes represented here are described in the process description and pollution control sections of this process summary. Inverted trapezoids denote residual storage.

2. PROCESS DESCRIPTION

The specific steps of the Synthane coal gasification process are described in this section, and the generation of pollutants is discussed

FIGURE IV-1
The Synthane Process

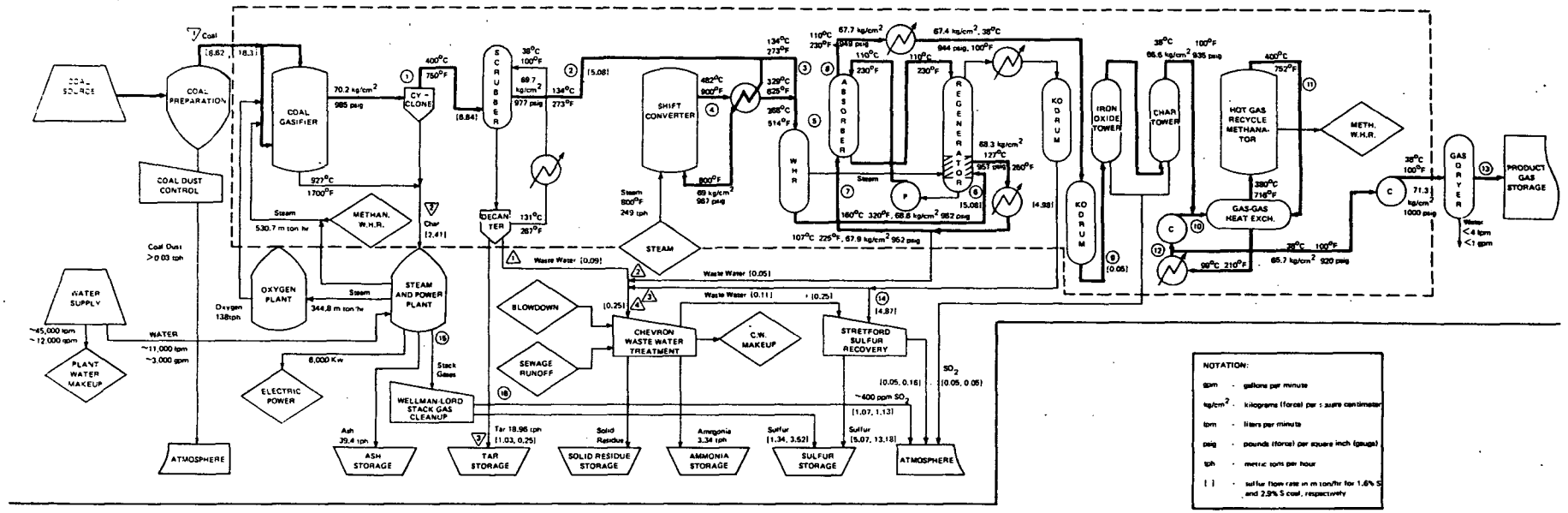

NOTATION:

- gpm - gallons per minute
- kg/cm² - kilograms (force) per square centimeter
- lpm - liters per minute
- psig - pounds (force) per square inch (gauge)
- tph - metric tons per hour
- [ ] - sulfur flow rate in m ton/hr for 1.6% S and 2.9% S coal, respectively

COMPOSITION OF GASEOUS STREAMS (VOL. %)

COMPONENT	1	2	3	4	5	6	7	8	9	10	11	12	13	14	15	16
N_2	0.5	0.8	0.8	0.4	0.6	0.7	0.8	1.2	1.2	1.8	2.0	2.1	2.1	–	78.4	78.4
O_2	–	–	–	–	–	–	–	–	–	–	–	–	–	–	2.9	2.9
H_2	17.5	26.5	26.5	20.4	22.7	24.0	31.3	46.0	47.0	20.3	3.4	3.5	3.5	0.1	–	–
H_2O	37.1	4.4	4.4	42.2	28.9	9.2	2.0	2.2	0.1	0.1	6.4	0.1	TRACE	4.8	1.3	1.3
CO	10.5	16.0	16.0	2.3	7.1	9.1	9.8	14.4	14.7	5.7	0.1	0.1	0.1	–	–	–
CO_2	18.2	27.7	27.7	21.2	23.5	30.0	32.4	2.0	2.0	3.0	3.4	3.7	3.7	93.6	17.3	17.3
CH_4	15.4	23.4	23.4	12.6	18.3	20.9	22.5	33.2	33.9	68.7	84.7	90.4	90.5	–	–	–
C_2H_6	0.5	0.7	0.7	0.4	0.5	0.7	0.7	1.0	1.1	0.4	–	–	–	–	–	–
H_2S	0.3	0.5	0.5	0.3	0.4	0.4	0.5	–	–	–	–	–	–	1.5	–	–
SO_2	–	–	–	–	–	–	–	–	–	–	–	–	–	–	0.13	0.06
FLOW RATE																
$m^3/hr \times 10^6$	1.162	0.765	0.382	0.710	1.092	0.854	0.791	0.538	0.527	1.369	1.215	0.842	0.296	0.262	1.335	1.334
$ft^3/hr \times 10^6$	41.02	27.00	13.50	25.06	38.56	30.16	27.94	18.99	18.59	48.33	42.89	29.74	10.42	9.27	47.14	47.10

COMPOS. OF LIQUID STREAMS (mg/l)

COMPONENT	1	2	3	4
SUSP. SOLIDS	23	–	–	8
COD	19,000	–	–	6,707
CO_2	13,000	13,000	13,000	13,000
NH_3	11,000	–	–	3,880
PHENOL	1,700	–	–	602
CYANIDE	0.6	–	–	0.2
THIOCYANATE	188	–	–	69
S	300	300	300	300
FLOW RATE lpm	5,057	3,020	6,272	14,349
FLOW RATE gpm	1,336	798	1,657	3,791

SOLID ANALYSIS (WT. %)

CONSTIT.	1	2	3
C	73.8	71.4	77.4
H	5.2	0.9	7.0
O	8.0	1.8	7.3
N	1.5	0.5	–
S	1.6	1.5	5.5
H_2O	2.5	–	–
ASH	7.4	23.9	2.8
FLOW RATE tph	593.75	181.10	20.90

ENERGY BALANCE

CARRIER	ENERGY (10^6 kcal/hr)	ENERGY (10^6 Btu/hr)
COAL	3,800.5	15,081.3
TOTAL INPUT	3,800.5	15,081.3
PRODUCT GAS	2,433.5	9,656.7
TAR	180.7	637.7
SULFUR	11.2	44.4
AMMONIA	17.9	71.0
COOLING WATER	982.8	3,900.0
OTHER (BY DIFFERENCE)	194.4	771.5
TOTAL OUTPUT	3,800.5	15,081.3

where appropriate. Pollutant control and cleanup processes are covered in subsequent sections.

(1) Coal Preparation

In the coal preparation stage, the coal is crushed by hammer mills and ground by ball mills until 70 percent of it passes through a 200-mesh screen (average diameter of 95 microns). The pulverized coal is then conveyed by an air stream to the lock hoppers. Coal dust and runoff wastewater are generated during this operation.

(2) Gasification

Coal from the lock hoppers is fed into the top of the fluid-bed gasifier, while a mixture of oxygen and steam is introduced at the bottom. The first stage of the gasifier provides pre-treatment of coal in the form of mild oxidation at 430 degrees C (800 degrees F) to prevent agglomeration. The gases formed here, including methane, carbon monoxide, and hydrogen, become part of the raw gas. The process does not require pretreatment that produces a separate waste stream.

In the lower stages, pulverized coal, steam, and oxygen react at 980 degrees C (1800 degrees F) and 35-70 kg/cm^2 (500-1000 psi) to produce raw gas, char, and tar. Char residue is withdrawn at the bottom of the gasifier, while the raw gas is withdrawn. The quantities of major constituents are shown in Figure IV-1. Recent process development unit (PDU) data also indicate the presence of suspended solids, COD, phenol, ammonia, cyanide, thiocyanate, carbonyl sulfide, thiophene, and methyl mercaptan. These compounds are removed during subsequent purification.

(3) Raw Gas Cleanup

The raw gas from the gasifier is first passed through cyclone separators to remove entrained char particles and then is scrubbed with water and oil to remove tar and other impurities. The composition of the effluent gas stream is shown in Figure IV-1, while the breakdown of sulfur compounds present is reported in Table IV-1.

Table IV-1
Sulfur Compounds in Scrubber Effluent Gas

Component	ppm (by volume)	Tons/Day (Sulfur)
Carbonyl sulfide	11	0.5
Thiophene	55	2.5
Methyl mercaptan	8	0.3
Hydrogen sulfide	(by difference)	131.1

The scrubber water is recycled through a decanter that separates the tar and bleeds off excess wastewater, with the composition given in Table IV-2 and shown as stream 1 in Figure IV-1. The composition of the tar appears in Figure IV-1 under column 3, but recent PDU data for Illinois No. 6 coal indicate also the presence of trace quantitites of arsenic (0.7 ppm) and mercury (0.003 ppm).

Table IV-2
Composition of Wastewater From Gasifier

Component	Mg/Liter	Lbs/Hr
Suspended solids	23	15
COD (chemical oxygen demand)	19,000	12,710
Carbon dioxide	13,000	8,680
Ammonia	11,000	7,360
Phenol	1,700	1,140
Cyanide	0.6	<1
Thiocyanate	188	130
Sulfur	300 ppm	200
Aromatics	trace	~
Pyridines	trace	~

(4) Shift Conversion

Following the scrubbing state, the gas stream undergoes CO shift conversion to adjust the H_2/CO ratio to approximately 3.2 prior to the purification and methanation stages. The gas is first split into two streams. The first stream is heated to 430 degrees C (800 degrees F) by hot gas from the shift reactor and is fed, along with steam, to the reactor. The shifted gas is then mixed with the second half of the scrubber stream and passed through a waste heat recovery boiler (WHR) to recover heat. The composition of the condensate produced here is shown as stream 2 in Figure IV-1 under the assumption that the sulfur and carbon dioxide content is the same as in the raw gas condensate.

(5) Purification

The acid gas purification stage selected by the USBM consists of single-stage scrubbing by a hot potassium carbonate solution to remove carbon dioxide, hydrogen sulfide, and carbonyl sulfide followed by cooling, passage through a knock-out drum, and then through iron oxide and char towers to remove any remaining traces of hydrogen sulfide and other sulfur compounds that would poison the methanation catalysts. About 30 ppm of hydrogen sulfide and carbonyl sulfide, and 40 ppm of thiophene and mercaptans are expected to be present in the gas stream leaving the scrubber.

The spent hot potassium carbonate solution is regenerated by steam to produce a sulfur recovery feed stream containing about 1.5 percent hydrogen sulfide and a condensate with a composition shown as stream 3 in Figure IV-1. Loss of hot potassium carbonate solution is minimal and is not expected to present a pollution problem.

Spent iron oxide is discarded or returned to the manufacturer for regeneration, while activated carbon is regenerated by steam. After condensation of steam, the remaining substance can be incinerated. The amounts of emissions produced here are quite small and are not expected to contribute significantly to the pollution problem.

(6) Methanation

The purified gas is methanated over Raney nickel catalyst. Its amount and life are not known, but the catalyst will be returned to the manufacturer for reactivation or replacement. In the commercial operation, hot gas recycle (HGR) methanation will be substituted for the original concept using Dowtherm, a high-temperature liquid which could decompose and contribute to the pollution problem. The HGR method utilizes the sensible heat capacity of the recycled gas to cool the catalyst.

(7) Cooling and Drying

Following methanation, the product gas is cooled to 38 degrees C (100 degrees F) to condense out water, which contains very little contamination and can be reused. Although in the original flow diagram there was no provision for drying the gas to pipeline specification of 7 pounds of water per 10^6 ft^3 of gas (112 kg of water per 10^6 m^3 of gas), this can be accomplished with the aid of a drying system using ethylene glycol. The amounts of water and solvent given off at this stage are quite small and are not expected to add significantly to the pollution problem.

(8) Steam and Power Generation

The steam and electric power requirements of the process are to be met by an on-site steam plant fired by the gasifier char. The resultant stack gases would contain sulfur dioxide in excess of the maximum permissible level of 1.2 pounds of SO_2 per 10^6 Btu of fuel burned (2.16 kg/10^6 kcal). The heating value of the char supplied for steam and power generation totals 994 x 10^6 kcal/hr (3940 x 10^6 Btu/hr). The process developer reports a power requirement of 6000 kW. Based on the projections of other developers, 40 to 50 MW seems more realistic. The estimated total high pressure steam requirements for this facility are 2,478,600 lb/hr (1,124,590 kg/hr). Sufficient energy is available from the char for this steam and power requirement.

The oxygen requirements could be provided by an on-site steam-powered oxygen plant, which produces no harmful emissions.

(9) Energy Balance

The overall energy balance for the Synthane process is calculated from the heats of combustion and sensible heats of the feedstocks, products, and residuals. A summary tabulation of such calculations is presented in Figure IV-1 and derived in Table IV-3 on the basis of heats of combustion listed at the beginning of this chapter. The energy conversion efficiency (coal-to-gas) is, therefore:

$$2,433.5/3,800.5 = 0.640.$$

(10) Sulfur Balance

Sulfur flow rates for the various steps in the process have been calculated for two different feedstocks (1.6 percent S Pittsburgh seam coal and 2.9 percent S Illinois No. 6 coal) and for two alternative methods of char treatment (direct combustion and gasification plus combustion). Sulfur content of various streams was obtained by extrapolation from process development unit data or from related commercial experience. The resultant flow rates, expressed as m tons/hr and short tons/hr of sulfur are indicated in Figure IV-1 and tabulated in Table IV-4 of this process summary.

The reported sulfur output is the total evolved from all sources. It is composed of sulfur remaining in the by-product tar which is sold, sulfur recovered in its elemental form. Sulfur is also released to the atmosphere as SO_2 from the iron oxide/char towers. Not all of the sulfur in the feed stream can be recovered by the Wellman-Lord and Stretford processes.

(11) Water Requirements

The process developer projects a water requirement of 56,000 liters per minute (15,000 gpm). This indicates extensive use of water cooling within the process. Based upon the expectations of other developers and the FPC Task Force Report (Ref. 4) this water load might be reduced by a factor of two or three if extensive use is made of air cooling.

Table IV-3
Energy Balance Calculations

Carrier	Calculation	Energy (10^6 kcal/hr)	(10^6 Btu/hr)
Coal	538,650 kg/hr x 7,056 kcal/kg	3,800.5	15,081.3
Total energy input		3,800.5	15,081.3
Product Gas	295,009 m^3/hr x 8,249 kcal/m^3	2,433.5	9,656.7
Tar	18,960 kg/hr x 8,476 kcal/kg	160.7	637.7
Sulfur	5,069 kg/hr x 2,213 kcal/kg	11.2	44.4
Ammonia	3,338 kg/hr x 5,372 kcal/kg	17.9	71.0
Cooling Water	984,100 l/min x 59.9 kg min/l-hrs x 16.7 kcal/kg	981.8	3,900.0
Other*	(by difference)	194.4	771.5
Total energy output		3,800.5	15,081.3

* Includes sensible heat of product streams, heating value of other products, and heat lost to the atmosphere.

Table IV-4
Sulfur Balance - Short Tons/Hr (m Tons/Hr)

Carrier	Pittsburgh Seam Coal		Illinois No. 6 Coal	
	Direct Combustion	Indirect Combustion	Direct Combustion	Indirect Combustion
Coal	9.50 (8.62)	9.50 (8.62)	20.17 (18.30)	20.17 (18.30)
Total input	9.50 (8.62)	9.50 (8.62)	20.17 (18.30)	20.17 (18.30)
Tar	1.14 (1.03)	1.14 (1.03)	0.28 (0.25)	0.28 (0.25)
Sulfur	7.07 (6.42)	8.13 (7.38)	18.41 (16.79)	19.54 (17.73)
Sulfur (emissions)	1.18 (1.07)	0.10 (0.09)	1.25 (1.13)	0.10 (0.09)
Sulfides from sulfur recovery	0.06 (0.05)	0.08 (0.07)	0.18 (0.16)	0.20 (0.18)
Sulfides from iron oxide and char towers	0.05 (0.05)	0.05 (0.05)	0.05 (0.05)	0.05 (0.05)
Total output	9.50 (8.62)	9.50 (8.62)	20.17 (18.30)	20.17 (18.30)

3. DISCUSSION OF CONTROL PROCESSES

The five major waste streams emitted by the Synthane process and the proposed control and treatment methods are summarized in Table IV-5.

Table IV-5
Nature and Treatment of Major Waste Streams

Final Wastes	Sources	Treatment
Coal dust to atmosphere	Coal pulverization and handling	Cyclone separators, bag filters, enclosure
Char	Gasifier	Various
Tar	Scrubber	Various
Wastewater	Coal storage Scrubber Shift converter Regenerator	Biological, Phenosolvan and modified Chevron
Sulfur dioxide to atmosphere	Power plant, Stretford, iron oxide and char towers	Wellman-Lord

(1) Control of Coal Dust

Most of the coal dust produced during the coal pulverization and handling operations can be controlled with the aid of cyclone separators and bag filters. Assuming that 5 percent of the gross coal feed, or 27,000 kg/hr (60,000 lbs/hr), gets by the cyclone separators and that the bag filters retain 99.9 percent of that amount, some 27 kg/hr (60 lbs/hr) of fine coal dust is expected to escape to the atmosphere, unless additional precautions are taken, such as enclosure of the coal preparation operation.

(2) Utilization of Char

The char residue withdrawn from the bottom of the gasifier still contains approximately 70 percent of carbon, which can be converted to energy in the on-site steam plant. The stack gas produced, if the char were burned directly,

contains sulfur dioxide in excess of the maximum permissible level of 2.16 kg SO_2 per 10^6 kcal of fuel (1.2 lb/10^6 Btu), so that some form of desulfurization is required. This can be achieved through:

- Char pretreatment
- Combustion modification
- Stack gas cleanup.

The type of pretreatment is determined primarily by the nature of sulfur compounds present (for example, organic versus pyritic). In the Synthane process, since the iron pyrite is probably decomposed, two potentially applicable techniques for desulfurizing raw coal or char (IGT flash desulfurization and TRW pyrite leaching) would probably not be satisfactory. The char could, however, be converted to a low Btu gas of about 2670 kcal/m^3 (300 Btu/ft^3). This gas could be then desulfurized by acid gas cleanup similar to the scheme employed in the main process and burned in the steam plant. This operation should be carried out in a reactor capable of producing a clean ash—for example, through high temperature gasification of all carbon and sulfur. Suitable units would include:

- Koppers-Totzek reactor
- Bottom stage of Bi-Gas reactor
- Hygas steam-oxygen reactor
- U-Gas steam-air reactor
- Lurgi steam-air reactor.

The sulfur balance for the overall process incorporating the char gasification techniques is reported in Table IV-4 under the heading of indirect combustion.

Sulfur removal during combustion could be accomplished by the lime bed technique similar to the present EXXON-EPA study, but this approach is not yet proved. Stack gas cleanup was assumed for this analysis, and the sulfur balance for the overall process incorporating this last char treatment technique is reported in Figure IV-1 and in Table IV-4, under direct combustion.

(3) Utilization of Tar

The Synthane process generates a relatively large amount of tar because of the countercurrent flow of raw coal and gases in the upper stages of the gasifier. This tar might be utilized as an ingredient in road paving or roofing materials, or as fuel. The latter application requires removal of the high sulfur content, as was the case with the char, and can be implemented in one of four ways:

- Conversion to oil
- Direct gasification
- Direct combustion
- Indirect combustion.

Direct conversion to oil would require the application of residuum hydrocracking and desulfurization processes, such as the Gulf HDS process. Tar from gasification processes may not be suitable for standard distillate hydrodesulfurization because of its probable high particulate content. Alternately, the tar could be fed back into a low temperature zone of the gasifier where it can be hydrocracked. The resulting oil might be suitable for distillate hydrodesulfurization techniques.

Direct gasification could be achieved by reintroducing the tar into the high-temperature zone of the gasifier where the acid and gas cleanup unit would remove the sulfur from the gas. The Bureau of Mines is currently investigating this approach.

In the case of combustion to supplement process energy requirements, sulfur might be removed in the furnace, on a bed of lime, or by stack gas cleanup. The latter approach is considered demonstrated by the EPA, whereas the former is not.

Indirect combustion might be accomplished by partial oxidation of the tar (e.g., by the Texaco Partial Oxidation process), followed by desulfurization and combustion of the resultant low-Btu fuel gas. Alternatively, the tar could be impregnated on the char and gasified jointly by one of the techniques described in the preceding section.

(4) Liquid Waste Treatment

The principal liquid waste streams are the leachings from coal storage and the three condensate streams from the gasifier/scrubber, the shift converter, and the regenerator. The compositions of the three individual condensate streams are reported in Figure IV-1 in columns 1, 2, 3 respectively, whereas the composition of the merged condensate stream is shown in column 4. The composition of stream 1 (H_2S in wastewater) was confirmed by the process developer. Since H_2S concentrations in water are dependent on its solubility in water, H_2S levels were assumed to remain the same for streams 2 and 3.

Phenol may be recovered and sold as a by-product, destroyed by biological oxidation, or recycled to the reactor. In the latter case, it must still be removed from the wastewater stream to prevent excessive cooling and contamination of the reactor by the other components. The Phenosolvan process has been demonstrated commercially to remove phenol from wastewater leaving a residual concentration as low as 20 ppm. Some processes used by oil refineries may apply here, and additional processes are under development. The Phenosolvan process also removes most other hydrocarbons that may be present.

Ammonia, carbon dioxide, and hydrogen sulfide are recovered by the Chevron wastewater treatment process. Hydrogen sulfide and some carbon dioxide are first removed by a stripping tower and then sent to the sulfur recovery stage. Ammonia is recovered by a second stripping tower for sale as a by-product of a purity adequate for manufacture of anhydrous fertilizer. The Phosam process developed by U.S. Steel for recovery of ammonia from coking operations may be applicable here as well.

The wastewater purified by the Phenosolvan and Chevron processes may still contain 20 to 50 mg/1 of phenol, several hundred mg/1 of oils, and small amounts of ammonia, cyanide, and sulfur compounds. Its quality is satisfactory for cooling water makeup, though not for boiler water makeup. The low-concentration contaminants in cooling water are eventually eliminated by biological action in the cooling system, or they wind up in the cooling tower blowdown. The latter can be used

in such applications as quenching of hot ashes discharged from the bottom of the gasifier or the steam plant furnace.

Blowdown from cooling towers and boilers, as well as sanitary sewage and runoff water, can be treated by a miscellaneous treatment section incorporating a sewage treatment plant. The only waste product discharged from the wastewater treatment stage will be an inert solid residue. The quantity of this solid residue cannot be estimated since it is dependent on the particular unit processes selected to treat this wastewater and the method used to handle the resulting solid residue. Some water-soluble materials (such as chromium compounds used for boiler feed water treatment) may not be removed by this treatment, thus requiring a small bleedstream to evaporation ponds.

Two possible alternatives to the above recovery processes are high temperature, about 1400 degrees C (2500 degrees F), incineration and biological treatment of the liquid waste. The first method is costly because of the high fuel requirements, whereas the second would destroy possible valuable by-products.

(5) Sulfur Recovery

Recovery of elemental sulfur from the acid gas (CO_2 and H_2S) stream leaving the absorption stage is accomplished here by the Stretford process. This process was selected in preference to the more popular Claus unit, because it operates more efficiently with the low (1.5 percent) hydrogen sulfide concentrations prevailing here. The design efficiency of a Stretford process is 99 percent. Even higher efficiencies may be attained when operating on the effluent from a hot carbonate process since H_2S (easily handled by a Stretford unit) is the only sulfur compound present. The carbon dioxide effluent from a Stretford unit, using conventional design specifications, contains very small amounts of sulfur components (<150 ppm). Even lower sulfur content may be possible in this instance.

As an alternative to the Stretford process, the off-gas from the single-state hot potassium carbonate acid gas treatment could be treated by a secondary acid gas cleanup unit that is selective for H_2S. Suitable units would include amine systems, such as tertiary amine (TEA), diisopropanol amine (DIPA), or

solvent based systems, such as M-Pyrol, Rectisol, and Selexol. The sulfur-rich gas fraction could then be fed to a Claus unit, while the sulfur-lean remainder can be incinerated but at significant energy cost due to the additional coal requirements to fire the incinerators. Several techniques are available to treat the Claus tail gas.

A third alternative would be provided by the replacement of the single-stage hot carbonate treatment by a two-stage arrangement. Here the off-gas from the first stage would be treated by a two or three-stage Claus unit and its tail gas could be treated by available techniques. The off-gas from the second-stage hot carbonate treatment might contain 50-150 ppm H_2S which could be trapped in an iron-sponge bed again at relatively high cost.

The above discussion is intended merely to give the flavor of the great variety of schemes available for sulfur recovery. A complete definition of technical feasibility and costs and a thorough tradeoff analysis would be required prior to making a final selection.

(6) Stack Gas Cleanup

Sulfur dioxide in the stack gases from the steam and power plant can be recovered by lime scrubbing processes which have been demonstrated in several related applications. For this process analysis, we included the less proved but more advanced Wellman-Lord system. It is expected that this system will be proved by the time the Synthane process is ready for demonstration. The Wellman-Lord process regenerates concentrated SO_2. To arrive at the sulfur recovered in Figure IV-1, the incorporation of an Allied process was assumed.

A potential alternative is presented by the citrate process being developed by the Bureau of Mines, which is based on a reaction between sulfur dioxide and hydrogen sulfide. Other techniques in various stages of development include catalytic oxidation, and the double alkali processes.

4. COSTS OF POLLUTION CONTROL*

The costs of the pollution control and treatment processes described in the previous section are calculated in this section. It should be noted that the Synthane process is not currently commercial, so that figures given in this section are based largely on extrapolations from PDU data and related commercial experience.

The major assumptions and conventions adopted here are discussed in Chapter III, Section 1. All by-product flow rate data presented in Figure IV-1 apply.

The incremental** capital costs for pollution control are reported in Table IV-6 for each feedstock considered, and for both the direct and indirect combustion of residual char for steam and power generation. The incremental annual operating costs for pollution control are presented in Table IV-7.

The derivation of the formulas for calculating the incremental cost of gas production due to pollution control is presented in Chapter III, Section 1. For the discounted cash flow (DCF) method, the required incremental annual cost of gas, X, for the assumed rate of return is:

$$X = 0.23816\ I + 0.1275S + 0.230777W$$

where:

N = incremental net operating cost
I = incremental plant investment
S = startup costs
W = incremental working capital.

For the utility financing case (UFC), it is:

$$X = N + 0.1198\ C + 0.0198\ W$$

* The costs presented here are preliminary estimates; the actual costs of emission control in this process will not be known until a full-scale facility has been constructed and operated.

** Incremental costs in this report refer to that portion of the total plant cost that is assignable to pollution control facilities.

Table IV-6
Incremental Capital Investment[a] ($ Million)

Item	1.6% Sulfur Coal						2.9% Sulfur Coal					
	Direct Combustion of Char			Indirect Combustion of Char			Direct Combustion of Char			Indirect Combustion of Char		
Incremental Plant Investment[b]												
Dust Emission Control	2.2			2.2			2.2			2.2		
Tar Utilization*	—			—			—			—		
Wastewater Treatment	10.8			10.8			10.8			10.8		
Wellman-Lord SO_2 Recovery	7.7			—			6.6			—		
Allied Sulfur Recovery from SO_2	4.0			—			3.5			—		
Stretford Sulfur Recovery	3.6			3.6			8.2			8.2		
IGTU-Gas Indirect Combustion of Char	—			24.9			—			24.9		
Subtotal Plant Investment		28.3			41.5			31.3			46.1	
Project Contingencies[c]		4.2			6.2			4.7			6.9	
Incremental Plant Investment (I)		32.5	32.5		47.7	47.7		36.0	36.0		53.0	53.0
Startup Costs[d] (S)		1.5	1.5		1.8	1.8		2.0	2.0		2.2	2.2
		Utility	DCF		Utility	DCF		Utility	DCF		Utility	DCF
Interest During Construction[e] (IDC)		5.5	7.7		8.0	11.3		6.1	8.5		8.9	12.5
Incremental Working Capital[f] (W)		0.7	0.9		1.0	1.2		0.8	1.0		1.2	1.4
Incremental Capital Investment (C)		40.2	42.6		58.5	62.0		44.9	47.5		65.3	69.1

Notes:

a Incremental plant investment, return on investment during construction, and working capital are treated as capital costs in year 0 (the year ending with completion of startup operation).

b. Installed costs, including engineering design costs, contractors' profit, and overhead.

c Includes costs for unexpected site preparation and hardware requirements at 15 percent of plant investment.

d At 20 percent of incremental gross operating cost.

e For the DCF method, computed as the discount rate x Incremental Plant Investment for 1.875 years' average construction period. $I(1+i)^n = I(1.12)^{1.875} = 1.236761$ or 0.2367611 additional investment.

For the Utility Financing method, computed as the interest rate on debt x Incremental Plant Investment x 1.875 years.

f Sum of materials and supplies at .9 percent of incremental plant investment and net receivables at 1/24 of annual incremental revenue.

* It is assumed that recovered tar can be fed to the gasifier and transformed into product gas at no additional cost.

Table IV-7
Incremental Annual Operating Cost ($)

	1.6% Sulfur Coal				2.9% Sulfur Coal			
	Direct Combustion of Char		Indirect Combustion of Char		Direct Combustion of Char		Indirect Combustion of Char	
Labor								
Direct Operating Labor (3 men/shift x $5/hr x 8,304 shift-hrs/man-yr)	124,600		124,600		124,600		124,600	
Maintenance Labor (1.5% of I)	487,500		715,500		540,000		795,000	
Supervision (15% of direct operating and maintenance labor)	91,800		126,000		99,700		137,900	
Incremental Labor Cost		703,900		966,100		764,300		1,057,500
Administration and General Overhead (60% of Incremental Labor)		422,300		579,700		458,600		634,500
Other Direct Costs*		5,000,000		5,200,000		7,000,000		7,200,000
Supplies								
Operating (30% of Direct Operating Labor)	37,400		37,400		37,400		37,400	
Maintenance (1.5% of I)	487,500		715,500		540,000		795,000	
Incremental Cost of Supplies		524,900		752,900		577,400		832,400
Local Taxes and Insurance (2.7% of I)		877,500		1,287,900		972,000		1,431,000
Incremental Gross Operating Cost			7,528,600		8,786,600		9,772,300		11,155,400
By-Product Credits								
Sulfur (short tons/day x 365 days/yr x 0.9 capacity factor x $10/long ton x 2000/2240 long tons/short ton)		497,700		572,200		1,294,900		1,374,400
Ammonia (88.3 short tons/day for 1.6% sulfur coal and 110 short tons/day for 2.9% sulfur coal @ 0.9 capacity factor x 365 days/yr x $25/short ton)		725,200		725,200		903,400		903,400
Less By-Product Credits			-1,222,900		-1,297,400		-2,198,300		-2,277,800
Incremental Net Operating Cost (N)			6,305,700		7,489,200		7,574,000		8,877,600

*This item includes utilities and materials expended in the processes. The cost shown is a rough estimate that will need to be defined more precisely.

where:

C = required capital investment
N = defined above
W = defined above.

The annual gas production is:

$(250 \times 10^6\ ft^3/day)\ (927.1\ Btu/ft^3)\ (365\ days/yr)$

$(0.9\ capacity\ factor) = 76.138 \times 10^{12}\ Btu/yr$ or 19.198×10^{12}

kcal/yr.

This is about the production rate one would expect from a commercial Synthane plant.

The incremental cost of gas due to pollution controls is found as:

$$\frac{\text{annual cost}}{\text{annual gas production}} = \frac{X}{76.138 \times 10^{12}\ Btu/yr}$$

Solutions to the above equation for the incremental cost of gas are given in Table IV-8. The major impact on these costs, for the Synthane process, is net operating costs (N) which comprise nearly 60 percent of the incremental cost of gas. A graphic representation of the increase in the price of gas as a function of sulfur content of feedstock and of incremental capital cost is shown in Figure IV-2 (by-product credits are excluded).

5. REFERENCES

(1) "An Economic Evaluation of Synthane Gasification," U. S. Bureau of Mines Report No. 72-9A, October 1971.

(2) "Synthane Coal Gasification Pilot Plant," Final Environmental Statement, U. S. Department of Interior FES 72-78.

(3) Forney, A. J., Private Communication, U. S. Bureau of Mines, Pittsburgh Energy Research Center, September 1973.

(4) "The Supply Technical Advisory Task Force - Synthetic Gas Coal," Final Report, Federal Power Commission, April 1973.

Table IV-8

Incremental Cost of Gas Due to Pollution Control for the Synthane Process

Accounting Method	1.6% Sulfur Coal			
	Direct Combustion of Char		Indirect Combustion of Char	
	Incremental Annual Cost of Gas ($/yr)	Incremental Cost of Gas ($/$10^6$ Btu)	Incremental Annual Cost of Gas ($/yr)	Incremental Cost of Gas ($/$10^6$ Btu)
DCF*	14,444,900	0.19 (0.206)	19,356,000	0.25 (0.271)
Utility Financing	11,135,500	0.15	14,517,300	0.19

Accounting Method	2.9% Sulfur Coal			
	Direct Combustion of Char†		Indirect Combustion of Char†	
	Incremental Annual Cost of Gas ($/yr)	Incremental Cost of Gas ($/$10^6$ Btu)	Incremental Annual Cost of Gas ($/yr)	Incremental Cost of Gas ($/$10^6$ Btu)
DCF*	16,633,600	0.22 (0.247)	22,103,800	0.29 (0.320)
Utility Financing	12,968,900	0.17	16,724,300	0.22

*The incremental cost of gas without considering by-product credits is given in parentheses.

†The char fuels a furnace which raises steam to satisfy process steam and power requirements.

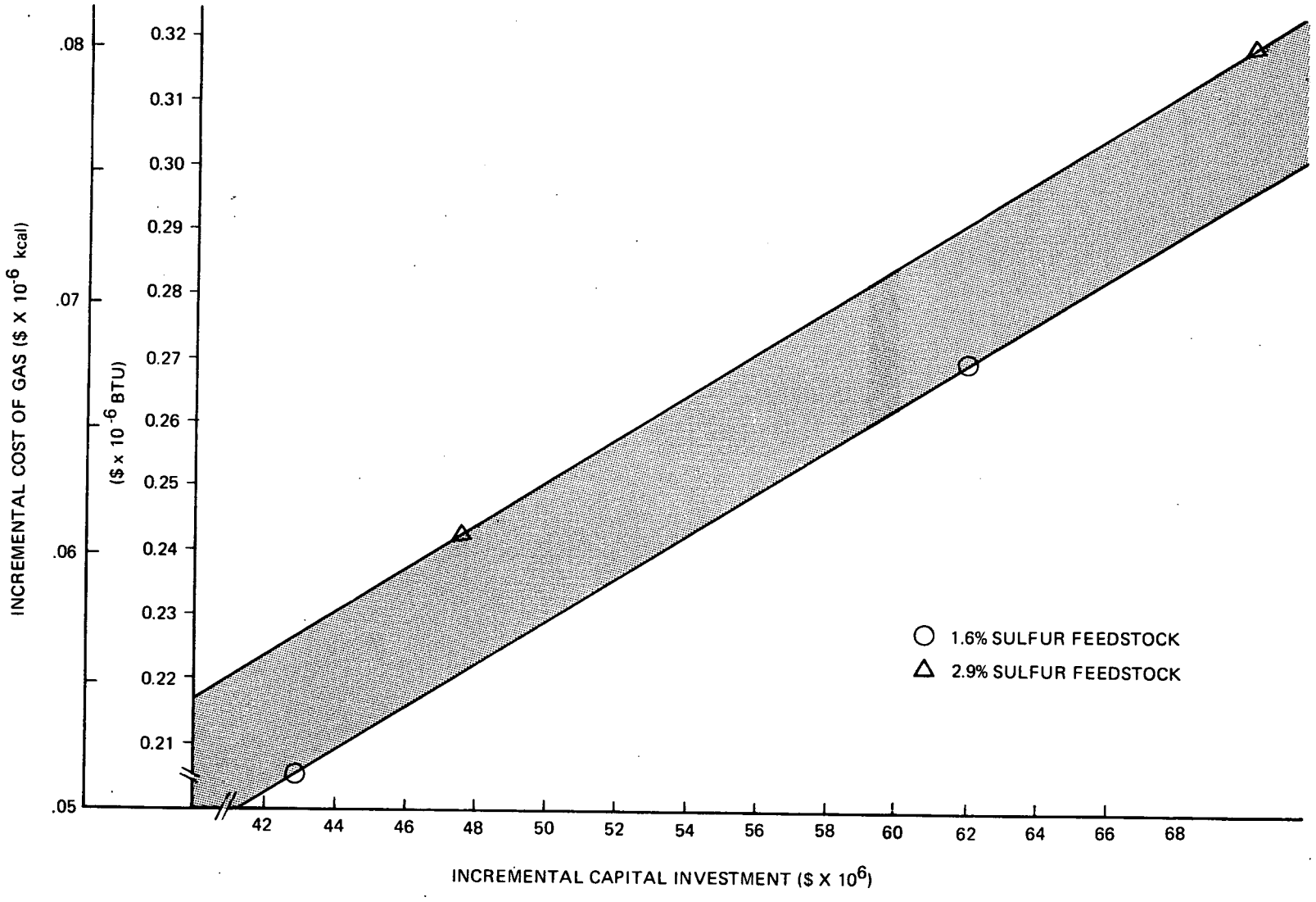

FIGURE IV-2
Incremental Cost of Gas

V. THE CO_2 ACCEPTOR PROCESS

The CO_2 Acceptor Process, an outgrowth of coal gasification research performed during the 1950's by the Consolidation Coal Company, is unique in its use of lime or calcined dolomite. In some high Btu processes, air is introduced to support the combustion which supplies the heat required for gasification. This requires a nitrogen barrier to enable the product to attain the heating values required of pipeline quality gas. The lime or dolomite reacts exothermally with carbon dioxide to supply the heat required for the steam-carbon reaction. It also absorbs ("accepts") CO_2 from the gasifier gases, thus increasing the direct formation of methane and negating the need for a subsequent shift converter.

To minimize the rate of "acceptor" recirculation, gasification temperature is limited to about 816 degrees to 857 decrees C (1500 degrees to 1575 degrees F). At these relatively low gasifier temperatures, only very reactive feeds, such as lignite and subbituminous coals, are commercially suitable as feedstocks.

A pilot plant, processing 36-metric tons per day (40 short tons/day) of coal, costing $9 million, has been constructed in Rapid City, North Dakota, by the Sterns-Roger Corporation. Test runs began in the spring of 1971 to provide data for future commercial designs. Eventually several Western lignite and subbituminous coals will be processed and a number of dolomites and limestones will be tested for use as CO_2 acceptors. At present, only the gasification section is installed. After the process is demonstrated, gas purification and methanation stages will be added.

1. PROCESS DISPLAY

The schematic flow diagrams and energy balance for the CO_2 Acceptor process is shown in Figure V-1. The CO_2 Acceptor process has been simplified after publication of the documents used as source data for this synopsis. The overall emissions, however, are expected to be similar to those developed here. The composition and flow rates of the gaseous, liquid, and solid streams are presented in Tables V-1 and V-2.

Table V-1
Compositions of Gaseous Streams

Stream No./ Component, Vol %	1	2	3	4	5	6	7	8	9	10	11	12	13	14	15	16
O_2	--	--	--	--	--	21.0	--	--	--	--	--	--	--	0.19	21.00	--
CH_4	17.34	7.17	--	--	7.17	--	--	19.65	21.88	--	22.46	81.65	92.40	0.06	--	--
C_2H_6	0.34	--	--	--	--	--	--	0.39	0.43	--	0.44	--	--	0.02	--	--
CO	14.10	8.23	--	--	8.23	--	3.52	15.98	17.79	--	18.26	0.09	0.10	--	--	--
CO_2	5.51	4.21	--	--	4.21	--	29.77	5.34	0.46	41.92	0.47	0.89	1.00	22.06	--	85.92
H_2	44.54	50.54	--	--	50.54	--	--	50.49	56.20	--	57.69	5.15	5.83	0.17	--	--
N_2	0.23	0.38	--	--	0.38	79.0	64.88	0.26	0.29	--	0.30	0.58	0.66	54.44	79.00	--
NH_3	0.80	--	--	--	--	--	--	--	--	--	--	--	--	--	--	--
H_2S	0.05	0.04	--	--	0.04	--	--	0.05	70 ppmW	--	--	--	--	0.01	--	9.33
COS	8.2 ppmV	3.1 ppmV	--	--	3.1 ppmV	--	--	9.3 ppmV		0.45 --	--	--	--	--	--	
H_2O	17.09	29.43	100.00	100.00	29.43	--	1.80	7.84	2.95	57.63	0.38	11.64	0.01	23.03	--	4.75
SO_2	--	--	--	--	--	--	0.03	--	--	--	--	--	--	0.02	--	--
Total	100.00	100.00	100.00	100.00	100.00	100.00	100.00	100.00	100.00	100.00	100.00	100.00	100.00	100.00	100.00	100.00
$ft^3/hr \times 10^{-6}$	31.48	18.85	3.92	16.95	37.47	41.07	49.93	27.76	24.94	3.26	24.30	15.45	10.93	90.03	21.28	1.45
lb-mole/hr	83.049	49.723	10.345	44.731	98.856	108.361	131,733	73,257	65.809	8.605	64,112	40,754	28,837	237,547	56,148	3,828
gm-mole/sec	(10,473)	(6,271)	(1,305)	(5,641)	(12,467)	(13,666)	(16,613)	(9,239)	(8,299)	(1,085)	(8,085)	(5,140)	(3,637)	(29,957)	(7,081)	(407)

Comp. of Liquid Streams (mol %)	
1	
Water	86.41
CO_2	6.81
NH_3	6.78
H_2S	11 ppm
Naphthalene	trace
Total	100.00
lb-mole/hr	9.777
gm-mole/sec	(1,233)

FIGURE V-1
CO_2 Acceptor Process Flow Sheet

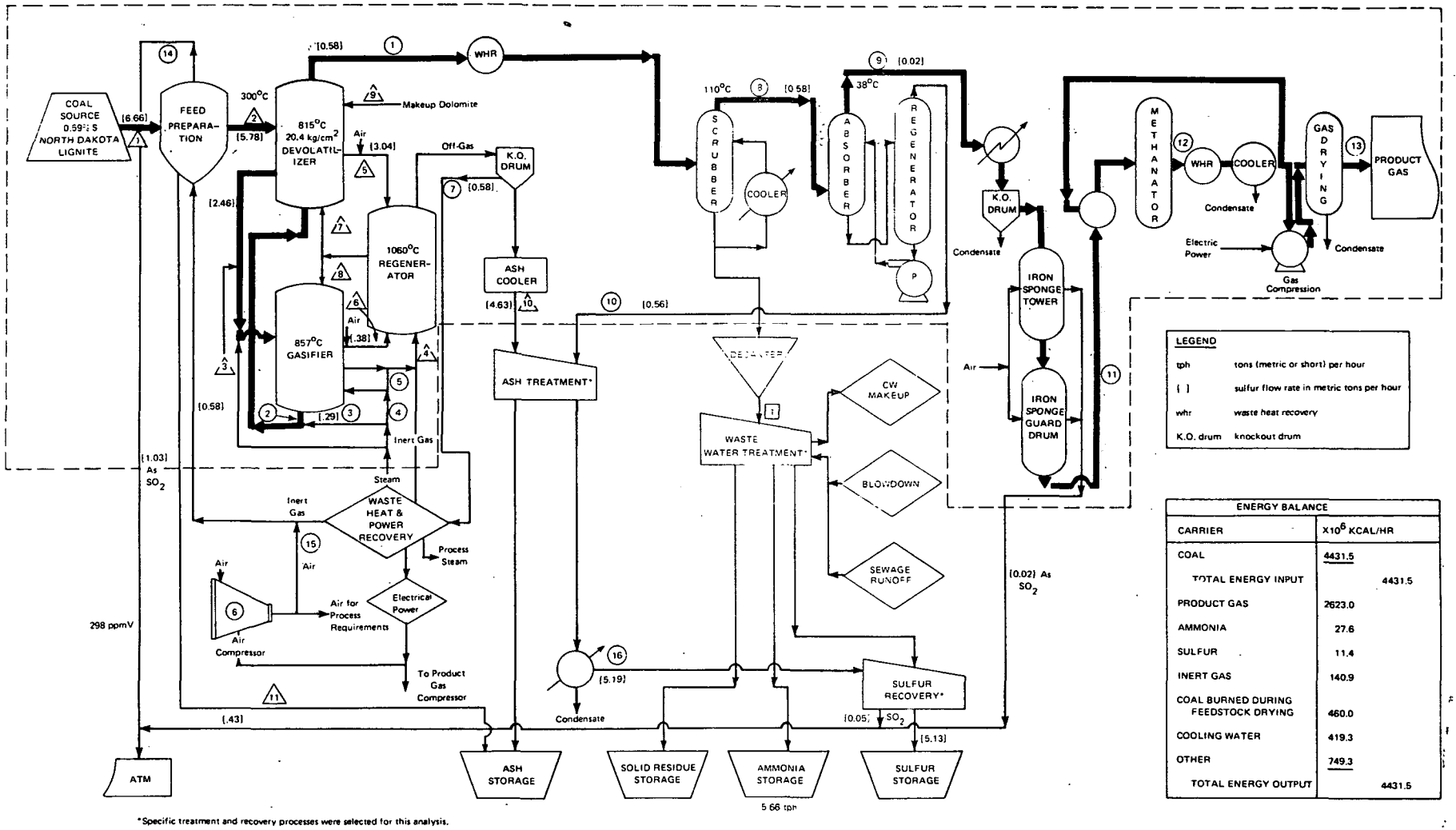

LEGEND

tph	tons (metric or short) per hour
[ ]	sulfur flow rate in metric tons per hour
whr	waste heat recovery
K.O. drum	knockout drum

ENERGY BALANCE		
CARRIER	$\times 10^6$ KCAL/HR	
COAL	4431.5	
TOTAL ENERGY INPUT		4431.5
PRODUCT GAS	2623.0	
AMMONIA	27.6	
SULFUR	11.4	
INERT GAS	140.9	
COAL BURNED DURING FEEDSTOCK DRYING	460.0	
COOLING WATER	419.3	
OTHER	749.3	
TOTAL ENERGY OUTPUT		4431.5

*Specific treatment and recovery processes were selected for this analysis. The system contained within the dotted line was defined by the process developer.

Table V-2
Solids Analysis

Stream No./Component	1	2	3	4	5	6	7	8	9	10	11
Coal/Char, wt %											
H	2.82	4.01	0.920	0.550	--					--	--
C	41.70	65.37	75.152	66.012	--					23.44	--
N	0.69	1.10	0.805	0.190	--					--	--
O	13.32	17.17	1.850	1.045	--					--	--
S	0.59	0.90	0.688	0.763	--					4.53	5.21
H_2O	33.67	--	--	--	--					--	--
Ash	7.21	11.45	20.585	31.440	--					72.03	94.79
Total	100.00	100.00	100.000	100.000						100.00	100.00
Dolomite, wt %											
$MgCO_3CaCO_3$					--	--	--	--	100.00		
MgOCaS					0.92	0.08	--	--	--		
$MgOCaCO_3$					46.04	43.86	--	--	--		
MgOCaO					53.04	56.06	100.00	100.00	--	100.00	
Total					100.00	100.00	100.00	100.00	100.00	100.00	
lb/hr Dolomite					2,559,600	3,587,200	2,088,800	3,093,650	187,650	98,100	
(kg/hr Dolomite)					(1,161,340)	(1,627,590)	(947,730)	(1,403,650)	(85,140)	(44,510)	
lb/hr Char/Coal	2,488,000	1,417,300	788,250	516,200						225,280	18,045
(kg/hr Char/Coal)	(1,128,850)	(643,060)	(357,650)	(243,210)						(102,210)	(8,187)

(1) Bases for Analysis

The analysis shown is for a 0.59 percentage sulfur (as received wet basis) North Dakota Lignite coal whose moisture-free composition is as follows:

COMPONENT ANALYSIS (DRY COAL)

Components	Weight, %
Hydrogen	4.25
Carbon	62.87
Nitrogen	1.04
Oxygen	20.08
Sulfur	0.89
Ash	10.87
Total	100.00

This 33.67 percent moisture coal has a heating value of 3927 kcal/kg (7068 Btu/lb). The plant is sized to consume 1129 m ton/hr (1244 short tons/hr) of lignite feed and produce 7.43×10^6 m^3/day (about 260×10^6 ft^3/day) of an 8474 kcal/m^3 (952.3 Btu/ft^3) gas. The plant's coal-to-gas thermal efficiency is determined to be 59.2 percent.

(2) Layout and Symbols

The general direction of process flow is from the coal supply on the left to the product gas on the extreme right of the flow diagram, with residuals and by-products shown along the bottom. The bold line indicates the flow of the primary gasification process.

The figures contained within the triangles, circles, and squares, respectively, refer to the solid, gaseous, and liquid stream compositions depicted in Tables V-1 and V-2. The bracketed figures report the sulfur flow rate for the 0.59 percent sulfur feedstock. The overall energy balance, shown to the right of the flow diagram, is calculated in Table V-3. That

portion of the CO_2 Acceptor Process defined by the process developer is contained within the dashed line in Figure V-1; the remaining portions of the flow diagram are proposed for this analysis.

The rhombic-shaped units represent intermediate products (such as cooling water makeup) and sources (such as blowdown) for which the distribution is not shown. Nonintegral pollution cleanup processes are indicated by sloping rectangles. The treatment and recovery processes which this symbol represents are described in the process description and pollution control portions of this chapter. Inverted trapezoids denote residual or by-product storage.

2. PROCESS DESCRIPTION

The unit processes which define the CO_2 Acceptor Process are described in this section, and the generation of pollutants and manufacture of by-products is discussed where appropriate. The discussion of pollutant control and cleanup processes are covered in the following section.

(1) Coal Preparation

The raw lignite delivered to the plant is first crushed to less than 5/8 cm in hot-gas-swept impact mills. Its moisture content is reduced from 34 to 16 percent in this step. Flash dryers further dry the lignite until it is substantially free of moisture. In the final preparation step, fluidized preheaters heat the dry lignite to about 300 degrees C (570 degrees F), driving off some additional moisture and CO_2.

Multistage drying of the lignite conserves total heat, and the dried, heated feed reduces the devolatilizer heat requirement. Lignite, and lignite fines which are generated in the crushing step, are used as fuel in the feed preparation section.

(2) Devolatilization

The coal-to-gas conversion system employs three fluidized bed reactors: a devolatilizer, gasifier, and regenerator. Preheated lignite feed enters the devolatilizer through lock hoppers. The devolatilizer operates at 815 degrees C (1500 degrees F) and 20.4 kg/cm^2 (290 psia). Its bed is fluidized by gases evolved in the gasifier and by steam. Most of the heat requirement is supplied by hot calcined domolite flowing into the devolatilizer from the regenerator (stream 7). Makeup dolomite is also injected into this vessel. This calcined dolomite removes CO_2 from the devolatilizer gas by the exothermic reaction,

$$MgO \cdot CaO + CO_2 \longrightarrow MgO \cdot CaCO_3$$

(stream 5). Spent acceptor and lignite char are separated as they leave the devolatilizer. Spent dolomite returns to the regenerator for calcination, and the devolatilized lignite is transferred by superheated steam to the gasifier vessel (stream 3).

(3) Gasification

Approximately 44 percent of the residual MAF (moisture and ash-free) char is gasified in the gasifier at 857 degrees C (1575 degrees F). The amount of carbon conversion is dependent on the quantity of carbon required for acceptor regeneration, discussed in section (4) below. The gasifier is fluidized by steam (stream 4) and by recirculated gasifier effluent gases (stream 5). The heat required for gasification is supplied by hot calcined dolomite from the regeneration vessel (stream 8). Spent dolomite (stream 6) and residual char are separated in the gasifier and withdrawn in separate streams for transfer to the regenerator. The gas produced is returned to the devolatilizer.

(4) Regeneration

In the regenerator, residual char is burned at 1060 degrees C (1940 degrees F) to generate the heat necessary for the recalcination of the dolomite. Regenerator off-gases carry unburned char and ash to cyclones for separation from the gas. The calcined dolomite is recycled to the devolatilizer and gasifier

vessels. A dolomite makeup rate of approximately 2 percent is required to maintain a satisfactory level of dolomite acceptor activity and to replace losses. Sufficient sensible heat is contained in the regenerator off-gases to generate and superheat the steam required in the gasifier. Expansion of the cooled regenerator gases from 593 degrees C (1100 degrees F) and 19 kg/cm^2 (270 psia) through a turbine to 1.1 kg/cm^2 (15.5 psia) and 237 degrees C (459 degrees F) generates enough power to drive the main air compressor and the product gas compressor.

(5) Gas Purification

The main components of the devolatilizer effluent gas are methane, carbon monoxide, carbon dioxide, hydrogen, and steam. Laboratory experiments have confirmed that as a result of its 815 degree C operating temperature, no tar or hydrocarbon liquids are contained in the devolatilizer off-gas. The hot effluent gas is first partially cooled in waste heat recovery boilers which generate process steam. The gas is then further cooled to about 110 degrees C (230 degrees F) in a water-scrubbing tower. Hot potassium carbonate scrubbing removes about 90 percent of the CO_2 and essentially all of the H_2S from the gas. Cleaned gas is cooled to near 38 degrees C (100 degrees F), and condensed water is separated. Final traces of sulfur are removed in iron sponge towers. The gas is methanated by any suitable methanation process. The Consolidation Coal Company has indicated interest in the U.S. Bureau of Mines' tube-wall reactor in which the gas is methanated by contact with flame-sprayed catalyst on heat-exchange tubes, and also in the Bureau of Mines' hot gas recycle methanation system. The final product gas, nearly sulfur and carbon monoxide free, has a heating value of 8474 $kcal/m^3$ (952.3 Btu/ft^3). It is compressed to 70.3 kg/cm^2 (1000 psia), dehydrated, and then delivered to the pipeline.

(6) Dolomite Preparation

About 2040 metric tons/day (2250 short tons/day) of dolomite are added to the devolatilizer as makeup to maintain activity of the acceptor and to replace losses. Dolomites and limestones from Ohio, Virginia, and South Dakota have been evaluated in the laboratory. Specific sources of dolomite have not been selected in this report because

these will depend upon gasification plant location and the activity of dolomites available near it. The dolomite will be crushed to finer than 16 mesh at the mine before shipping to the coal gasification plant. Conventional solids transfer equipment can transport dolomite from stockpile to lock hopper for injection as needed into the devolatilizer.

(7) Offsites

The regenerator air compressor is driven by expansion of regenerator hot effluent gases through a power turbine. For this plant size, two 2-stage, axial compressors will be required with inter-coolers; total horsepower requirement will be about 225,000 horsepower.

Enough power may be developed by the regenerator gas power turbine to drive the 33,000-horsepower product-gas compressor. Steam is generated by the devolatilizer off-gas, by the regenerator off-gas, and by interstage steam generators in the methanation system. This amount of steam may be somewhat greater than the plant steam requirements. Any excess steam will be used to generate power.

(8) Pollutant Generation and By-Product Manufacture

The solids separated from the regenerator off-gas are lignite ash and dolomite fines. These solids contain approximately 70 percent of the lignite feed sulfur as $MgO \cdot CaS$. Before disposal, the solids must be stabilized to prevent oxidation and hydrolysis of this sulfide. The ash is treated in a fluidized bed with off-gas from the hot potassium carbonate regenerator (stream 10). This gas is mainly steam and CO_2, containing less than 0.5 percent sulfur compounds. Carbon dioxide and water react with the $MgO \cdot CaS$ to form H_2S and $MgO \cdot CaCO_3$. According to the process developer, the product here will be $MgCO_3 \cdot CaCO_3$. With excess $MgO \cdot CaO$ reacting, the CO_2 content in the off-gas (stream 16) will be reduced improving the Claus plant operation. The stabilized solids can be slurried with water and pumped to ash settling ponds.

Gases from the ash-treatment reactor are enriched with H_2S to about a 9-percent concentration (Stream 16). Although this concentration is low, it is acceptable for Claus plant feed.

The Claus plant will be more expensive, and conversion to sulfur will be poorer, than if a higher sulfur content feed gas were available.

Excess water from the devolatilizer off-gas scrubber contains dissolved CO_2, ammonia, and hydrogen sulfide. This water is stripped by a Chevron wastewater treatment process. The process produces both an H_2S-rich gas stream, which is fed to the sulfur recovery plant, and anhydrous ammonia, which is recovered for sale. Most of the regenerator combustion gas is used as inert gas for the transfer and drying of lignite in the feed-preparation section. This gas is eventually vented to the atmosphere from the feed preparation section flash dryer. Part of the combustion gas from the regenerator is used to transport char from the gasifier to the regenerator.

(9) Energy Balance

The overall energy balance for the CO_2 Acceptor Process is presented in Figure V-1 and derived in Table V-3. From this energy balance, the coal-to-gas process efficiency is found to be

$$10,408.6 \times 10^6 \text{ Btu/hr} \div 17,585.2 \times 10^6 \text{ Btu/hr} = 59.2\%$$

(10) Sulfur Balance

The sulfur balance for the 0.59 percent sulfur* North Dakota Lignite coal feedstock is quantified in Table V-4 and discussed in Section 3 of this process summary. The 6.6 m tons/hr of sulfur reported is the total amount evolved from all sources. As shown in Figure V-1, the ultimate disposition of this 6.6 m tons/hr of sulfur is 5.13 m tons/hr recovered as elemental sulfur for sale, 0.43 m tons/hr contained in the ash returned to the mine for landfill, and 1.1 m tons/hr released to the atmosphere as SO_2.

* Calculated on a dry, ash-free basis, the sulfur content is 1.0 percent by weight.

Table V-3
Energy Balance Calculations

Carrier	Calculations	Energy	
		(x 10^6 Btu/hr)	(x 10^6 kcal/hr)
Coal	2,488,000 lb/hr x 7068 Btu/lb	17,585.2	4431.5
Total energy input		17,585.2	4431.5
Product gas	[illegible] x 10^6 ft^3/hr x 952 [illegible]	10,408.6	2623.0
Ammonia	[illegible] tons/hr x 2000 lb/ton x [illegible] Btu/lb	109.5	[illegible]
Sulfur	5.66 tons/hr x 2000 lb/ton x 3983 Btu/lb	[illegible]	[illegible]
Inert gas	49.93 x 10^6 ft^3/hr x 11.2 Btu/ft^3	[illegible]	[illegible]
Coal burned during feedstock drying		1,825.5	[illegible]
Cooling water	110,830 gal/min x 8.34 lb/gal x 60 min/hr x 30.0 Btu/lb	1,663.8	419.3
Other*	(by difference)	2.973.5	74.).3
Total energy output		17,585.2	4431.5

* Includes heating values of other products, sensible heat of product streams, and heat lost to the atmosphere.

Table V-4
Sulfur Balance

Carrier	Short Tons/Hr.	Metric Tons/Hr.
Coal (lignite)	7.34	6.66
Total input	7.34	6.66
Sulfur (elemental)	5.66	5.13
Sulfur Dioxide to atmosphere (0.64 short tons/hr in inert gas + 0.49 short tons/hr from burning of fines)	1.13	1.03
Sulfides from Claus & Beavon sulfur recovery	0.06	0.05
Sulfides from iron sponge drum	0.02	0.02
Sulfates in ash to minefill	0.47	0.43
Total output	7.34	6.66

3. DISCUSSION OF POLLUTION CONTROL PROCESSES

The major waste streams of concern in the CO_2 Acceptor Process and their treatment are discussed in this section and summarized in Table V-5.

(1) Sulfur Disposition

The path of sulfur, as it passes through this system, is complex. The final disposition of sulfur in the dry lignite devolatilizer feed, is:

- Ten percent to devolatilizer off-gas as H_2S to acid-gas treatment
- Ten percent to regenerator off-gas as SO_2
- Eighty percent to ash as $MgO \cdot CaS$.

Table V-5

Source and Treatment of Major Waste Streams

Final Wastes	Source	Treatment
Lignite dust	Crushers, flash dryers, solids, feed systems	Cyclone separators, bag filters
Ash, waste dolomite	Ash treatment	Immediate: ash ponds Ultimate: worked out strip mine pits
Wastewater	Scrubber, hot potassium absorber, knockout drums	Chevron process
Hydrogen sulfide	Ash treatment	Claus and Beavon processes
Sulfur dioxide	Feed preparation, iron sponge regeneration, Beavon process	None required - amounts are below permitted levels

The sulfur in the devolatilizer off-gas, together with carbon dioxide, is extracted by hot carbonate purification. This CO_2-rich gas (stream 10) is used to stabilize the ash. The ash converts to $MgO \cdot CaCO_3$, and the combined sulfur from the devolatilizer and ash (90 percent of the sulfur in the dried lignite) goes to a Claus sulfur recovery unit as H_2S.

The inert regenerator off-gas is used to purge the feed preparation system. The sulfur in this off-gas, together with the sulfur released in combustion of lignite fines in this system, is exhausted to the atmosphere. A large portion of the sulfur from the combusted lignite, however, is retained by the ash because of its alkalinity. The total quantity of sulfur dioxide released to the atmosphere is less than the EPA "New Source Performance Standard" for coal-fired furnaces of 2.2 kg $SO_2/10^6$ kcal (1.2 lb $SO_2/10^6$ Btu) when the total heat release of the combustion and lime regeneration is considered. The total SO_2 emitted is 1.323 kg/10^6 kcal (0.735 lb/10^6 Btu) of input lignite consumed.

(2) Control of Solid Wastes

Lignite dust is generated during the crushing and subsequent drying of the feed lignite. The bulk of these solids is separated from the gas stream by two-stage cyclones. The fines collected are burned to provide heat for lignite drying. The coarser solids are returned to the system as feed. Two stages of cyclones should be capable of removing about 98 percent of the total solids. Approximately 56,700 kg/hr (5 percent of the lignite feed) is assumed to enter the first cyclone. Solids entering the bag filters will equal about 1130 kg/hr. Bag filters will remove all but about 0.1 percent of the entering solids. The quantity of solids exiting from the bag filters to the atmosphere will amount to about 1.1 kg/hr (2.5 lb/hr).

The coal ash contained in the spent dolomite is stabilized in the ash treatment section by conversion of calcium sulfides to calcium carbonate. The stabilized ash and dolomite are slurried in water and pumped to retaining ponds for immediate storage. Water will be recovered from the settled solids and recirculated. When the pond is filled with solid material, it can be drained, dried, and the solids excavated and transferred to underground disposal in the worked-out strip mine pits.

Iron sponge guard drums can be regenerated several times; the frequency of regeneration depends on the quantity of sulfur contained in the feed gas. Eventually, the activity of the iron sponge declines and it must be removed from the vessels. Spent iron sponge should be regenerated before dumping to prevent spontaneous combustion and to convert the iron sulfides to iron oxides, which can then be discarded into the mine pits.

Methanation catalyst activity will decline as a result of aging and occasional plant upset. The spent catalyst must then be regenerated. The large amount of nickel contained in the catalyst probably will permit economical return of spent catalyst to the manufacturer for nickel recovery.

(3) Liquid Waste Streams

The stockpiled lignite at the plant should represent a quantity equal to at least two weeks' supply of feed. Leachings from this stockpile, as a result of rain and snowfall, can be segregated and treated by biological oxidation.

The major process wastewater stream is excess water from the devolatilizer off-gas scrubber (stream 1). Fortunately, the devolatilizer does not generate oils or tars due to its operating temperature and, therefore, these need not be dealt with in the wastewater treatment system. The scrubber wastewater will be saturated with carbon dioxide, ammonia, and hydrogen sulfide. The quantities present in the water, of course, are dependent on the quantities in equilibrium in the feed gas stream. The scrubber liquid may also contain some traces of naphthalene. Ammonia, carbon dioxide, and hydrogen sulfide are separated from the water by the Chevron wastewater treatment process. The hydrogen sulfide is concentrated in the first stripping tower and is sent to the Claus plant for sulfur recovery. The ammonia is stripped in a second stripping tower and is recovered as anhydrous ammonia for sale. The wastewater may be treated with active carbon for removal of traces of hydrocarbons or phenols. The quality of the wastewater should be adequate for the cooling tower makeup. The treated water may also be used as makeup in the ash cooling and slurry transport system.

Cooling tower and boiler blowdown can be combined with sanitary sewage and runoff water for conventional water treating. A waste product from this treatment will be an inert solid residue which can be discarded in the worked-out mine pit.

(4) Gaseous Waste Streams

Most of the gases vented to the atmosphere from the CO_2 Acceptor process come from the feed preparation and solids feeding system, specifically the gases vented from the crushing circuit, from the flash dryer exhaust, and from the lignite and dolomite feed hoppers. The regenerator combustion gas comprises most of this gas; the remainder is from combustion of lignite to preheat lignite dryer air. The regenerator off-gas contains 0.5 pounds of sulfur dioxide per million Btu

(0.9 kg/10^6 kcal) of lignite char burned and, therefore, meets the current emission standards. Lignite fines, having a sulfur content of 0.59 percent, are burned to preheat the air to the dryer in the feed preparation section. The sulfur dioxide generated during this lignite combustion is 1.07 pounds per million Btu (1.93 kg/10^6 kcal). The regenerator off-gas mixes with lignite combustion gas in the dryer before being vented to the atmosphere. The sulfur dioxide content of the combined streams is 300 ppm, and averages 0.735 pounds SO_2/10^6 Btu (1.323 kg/10^6 kcal) released in the two process stages. Sulfur dioxide removal is not required on this stream before it is emitted to the atmosphere. The lignite ash retains a substantial portion of the sulfur, thus reducing the sulfur emissions.

The iron sponge towers will be regenerated periodically by oxidation with air. During this process, some SO_2 will evolve. Because this operational step is intermittent, these exhaust gases will be combined with the large flow of gas from the feed preparation and feeding systems for direct venting to the atmosphere. Only a minor additional quantity of SO_2 is evolved during the regeneration of the iron sponge drums (18 kg/hr of sulfur, 40 lb/hr).

The gases vented from the hot potassium carbonate regenerator contain less than 0.5 percent H_2S and about 42 percent CO_2 (stream 10). This gas is utilized in the stabilization of the calcium sulfide produced in the regenerator. The rejected dolomite and lignite ash is treated by the CO_2-rich gas in the fluidized-bed ash treatment unit, converting the calcium sulfide to calcium carbonate and evolving H_2S. The CO_2-rich stream is is thereby further enriched with H_2S to slightly more than 9 percent. One third of the H_2S is oxidized in a Claus boiler and the SO_2 formed reacts with the remaining H_2S over bauxite catalyst to form sulfur. The sulfur is condensed and sent to sulfur storage. Tail gas from the Claus plant is further treated in a tail gas treatment process, such as the Ralph M. Parsons' Beavon Process. The Beavon process further reduces the amount of sulfur vented to the atmosphere. It is estimated that this combined sulfur recovery system will convert 99 percent of the feed sulfur to the elemental form, and only 1 percent will be vented to the atmosphere.

4. COSTS OF POLLUTION CONTROL *

Costs required for control and treatment of pollutants evolved during coal gasification by the CO_2 Acceptor process are calculated in this section. Since this process to produce pipeline gas is not yet in commercial use, derived cost figures are estimates of costs for similar pollution control unit processes. The major assumptions and conventions adopted here are discussed in Chapter III. All by-product flow rate data presented in Figure V-1 also apply.

The incremental** capital investment for control of potential pollutants and waste streams is presented in Table V-6. The investments considered are based on the control methods selected and described in Sections 2 and 3. The incremental annual operating costs for these emission control systems are presented in Table V-7. The incremental capital investment using utility financing is $22.6 million; using the discounted cash flow (DCF) method, it is $24 million. The annual operating costs, after taking credit for sulfur production at $10 per long ton and ammonia production at $25 per short ton, is about $1.5 million per year.

The derivation of the formulae for calculating the incremental cost of gas production due to pollution control is presented in Chapter III. For the DCF method, the required incremental annual cost of gas, X, for the assumed rate of return is:

$$X = N + 0.23816I + 0.1275S + 0.230777W,$$

where

N = incremental net operating cost

I = incremental plant investment

---

* The costs presented here are preliminary estimates; the actual costs of emission control in this process will not be known until a full-scale facility has been constructed and operated.

** Incremental costs in this report refer to that portion of the total plant cost that is assignable to pollution control facilities.

Table V-6
Incremental Capital Investment[a] ($ Million)

Item	$ Million	
Incremental plant investment[b]		
Dust emission control	2.2	
Wastewater treatment	10.8	
Sulfur recovery from ash	0.4	
Claus sulfur recovery with tail gas treatment	2.8	
Subtotal plant investment	16.2	
Project contingencies[c]	2.4	
Incremental plant investment (I)	18.6	18.6
Startup costs (S)[d]	0.6	0.6
	Utility	DCF
Interest during construction[e]	3.1	4.4
Incremental working capital (W)[f]	0.3	0.4
Incremental Capital Investment (C)	22.6	24.0

Notes:

a. Incremental plant investment, return on investment during construction, and working capital are treated as capital costs in year 0 (the year ending with completion of startup operation).

b. Installed costs, including engineering design costs, contractors' profit, and overhead.

c. Includes costs for unexpected site preparation and hardware requirements at 15% of plant investment.

d. At 20% of incremental gross operating cost.

e. For the DCF method, computed as the discount rate x incremental plant investment for 1.875 years' average construction period. $I(1+i)^n = I(1.12)^{1.875} = 1.23676I$ or 0.23676I additional investment.

For the utility financing method, computed at the interest rate on debt x incremental plant investment x 1.875 yrs.

f. Sum of materials and supplies at .9% of incremental plant investment and net receivables at 1/24 of annual incremental revenue.

Table V-7
Incremental Annual Operating Cost ($)

Labor			
Direct operating labor (3 men/shift x $5/hr x 8304 shift hrs/man yr)	124,600		
Maintenance labor (1.5% of I)	279,000		
Supervisory (15% of direct operating and maintenance labor)	60,500		
Incremental labor cost		464,100	
Administration and general overhead (60% of incremental labor)		278,500	
Other direct costs*		1,500,000	
Supplies			
Operating (30% of direct operating labor)	37,400		
Maintenance (1.5% of I)	279,000		
Incremental cost of supplies		316,400	
Local taxes and insurance (2.7% of I)		502,200	
Incremental gross operating cost			3,061,200
By-product credits			
Sulfur (135.8 short tons/day x 365 days/yr x 0.9 capacity factor x $10/LT x 2000 lt/2240 short tons)		398,400	
Ammonia (135.8 short tons/day x 365 days/yr x 0.9 capacity factor x $25/short ton)		1,115,600	
Less by-product credits			-1,514,000
Incremental net operating cost (N)			1,547,200

*This item includes catalysts and chemicals expended and utilities purchased for the pollution control processes.

S = startup costs

W = incremental working capital.

For the utility financing case, it is:

$$X = N + 0.1198C + 0.0198W$$

where

C = incremental capital investment

N and W = as defined previously.

For this analysis, the annual gas production, G, is:

$(10.93 \times 10^6\ ft^3/hr)(952.3\ Btu/ft^3)(0.9\ capacity\ factor)(8760\ hrs/yr) = 82.062 \times 10^{12}\ Btu/yr\ (20.680 \times 10^{12}\ kcal/yr)$.

This can be considered a typical production rate for a full-scale commercial plant. Therefore, the incremental cost of gas, due to pollution control is:

$$\frac{\text{annual cost of gas}}{\text{annual gas production}} = \frac{X}{G} = \frac{X}{82.062 \times 10^{12}\ Btu/yr}$$

Solution to the above equations for the incremental cost of gas is shown in Table V-8. When using the DCF method, the incremental cost of product gas, as a result of the investment and operating expenses for waste system control, is 7.5¢/million Btu of gas produced. Using the utility accounting method, it is 5.2¢/million Btu.

Table V-8
Incremental Cost of Gas Due to
Pollution Control for the CO_2 Acceptor Process

Accounting Method	Incremental Cost of Gas	
	$/yr	$/10^6 Btu
DCF	6,151,300	0.075
Utility financing	4,260,600	0.052

5. REFERENCES

(1) "Pipeline Gas from Lignite Gasification," R&D Report No. 16, Interim Report No. 4, 9 May 1969, to OCR, Department of the Interior.

(2) Fink, Carl A., "The CO_2 Acceptor Process," A paper presented to the EPA Regional Conference, Denver, Colorado, 1973 (unpublished).

VI. THE LURGI PROCESS (PIPELINE QUALITY GAS)

The Lurgi gasifier, the only commercial gasification unit studied in this program, was developed by the Lurgi Mineralötechnik GmbH of Frankfurt, West Germany. A unique feature of this process is that it is the only fixed-bed type reactor system being considered for coal gasification. Steam and oxygen are externally generated and supplied to the gasifier. Steam is used to generate hydrogen while oxygen supports the combustion which supplies the heat to sustain the endothermic gasifier reactions.

The present commercial Lurgi gasifier is limited to noncaking* coals; this restriction may prohibit its use on many Eastern United States coals. Recent gasifier research has been directed at mechanical modifications to allow use of mildly caking coals. The commercial application of such a Lurgi process may eventually become widespread. Sixteen commercial Lurgi plants, producing a gas of about 3560 to 4000 kcal/m^3 (400 to 450 Btu/ft^3), have been built during the last 30 years, and most are still in operation. The upgrading of this gas to pipeline quality, though now being studied on pilot plant and small commercial scale, has yet to be commercially proven. Methanation problems, however, can probably be solved. The first of the full-size plants, scheduled to produce 8.16×10^6 m^3/day ($288 \times 10^6 ft^3$/day) of pipeline quality gas, has been designed for the El Paso Natural Gas Company on a site near Farmington, New Mexico. Process design work has been completed, a report on environmental factors has been filed, and Federal Power Commission (FPC) authorization has been requested to proceed with the project. Information contained in this FPC filing was used in this chapter as an indication of one of the process designs that could be employed with this gasifier.

---

* In caking coals, volatile matter is liquefied at about 800 degrees F (427 degrees C) causing the coal particles to agglomerate or cake into large masses. Recent tests on the Lurgi facility in Westfield, Scotland have indicated that a modified gasifier is operable on mildly caking coals; however, a strongly caking coal could only be processed at reduced capacity. At this writing tests were not complete and therefore these results are preliminary.

1. PROCESS DISPLAY

The schematic flow diagram and energy balance for the Lurgi process is shown in Figure VI-1. Stream compositions, and flow rates are presented in Table VI-1.

(1) Basis for Analysis

The process flow chart data, stream compositions, and flow rate data presented in this process summary are based on a Lurgi plant designed for the El Paso Natural Gas Company by Lurgi and Stearns-Roger Incorporated and private communications with El Paso Natural Gas[1] [3]. The process design described in this synopsis has been simplified for presentation and modified from the reference documents. Therefore this presentation should not be regarded as the "El Paso" plant, but rather as typical of what a Lurgi facility might accomplish.

The analysis shown is for a 0.69 percent sulfur (as received) coal from the Navajo Seam, whose composition is as shown in Table VI-2. The heating value of this (16.25 percent moisture) coal is 4813 kcal/kg (8664 Btu/lb). Plant production capacity is 8.16×10^6 m^3/day (288×10^6 ft^3/day) of an 8489 kcal/m^3 (954 Btu/ft^3) gas. The plant's coal-to-gas thermal efficiency is determined to be 56.25 percent. Including heat values of by-products, the overall thermal efficiency is 71.6 percent.

(2) Layout and Symbols

The general direction of process flow is from the coal supply on the left to the product gas on the extreme right of the flow design, with residuals and by-products shown along the bottom. The bold line indicates the flow of the primary gasification process.

The encircled figures refer to the stream compositions shown in Table VI-1. The overall energy balance is shown to the right of the flow sheet.

FIGURE VI-1
The Lurgi Process

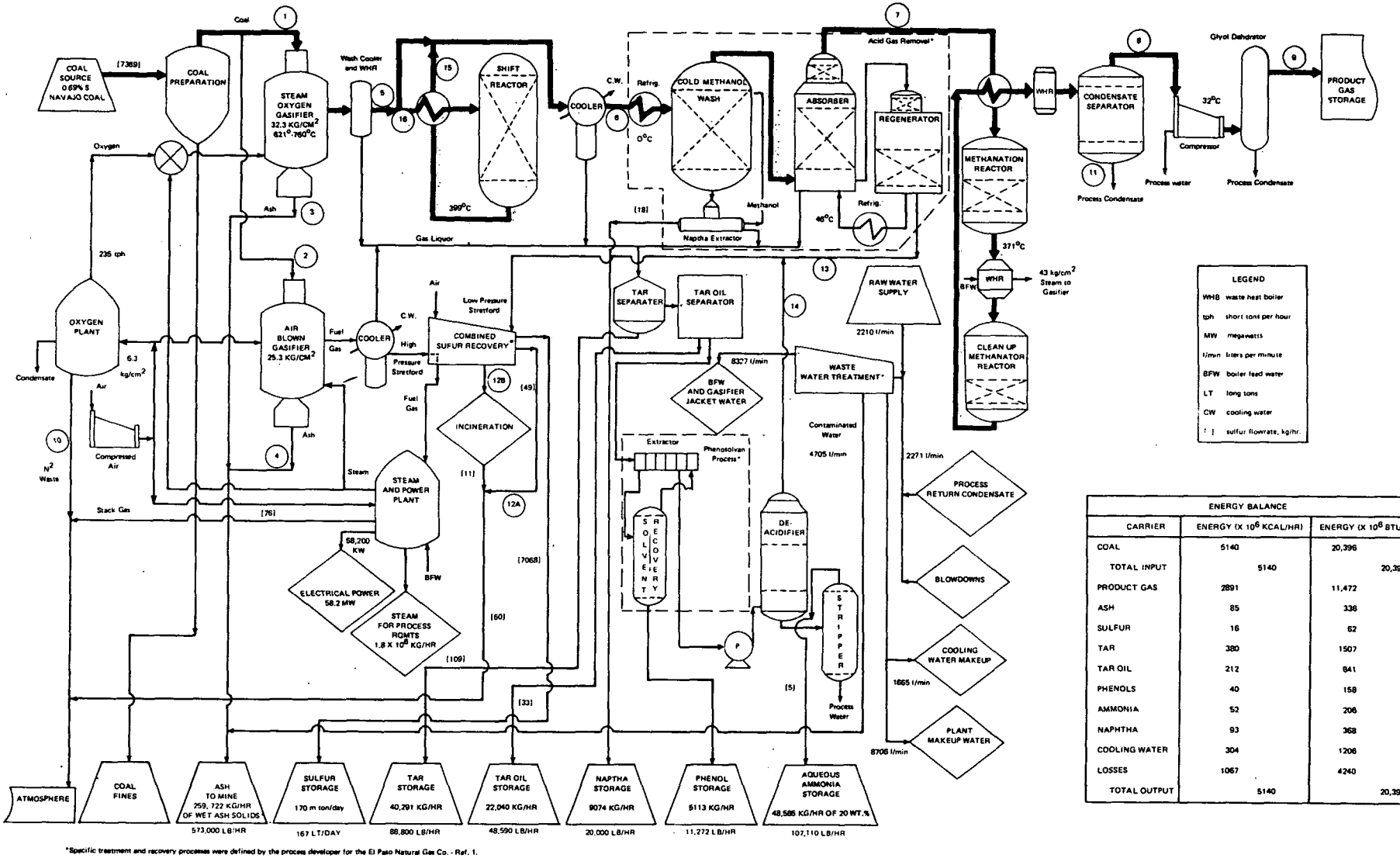

*Specific treatment and recovery processes were defined by the process developer for the El Paso Natural Gas Co. - Ref. 1.

ENERGY BALANCE		
CARRIER	ENERGY (X 10^6 KCAL/HR)	ENERGY (X 10^8 BTU/HR)
COAL	5140	20,396
TOTAL INPUT	5140	20,396
PRODUCT GAS	2891	11,472
ASH	85	336
SULFUR	16	62
TAR	380	1507
TAR OIL	212	841
PHENOLS	40	158
AMMONIA	52	206
NAPHTHA	93	368
COOLING WATER	304	1206
LOSSES	1067	4240
TOTAL OUTPUT	5140	20,396

Table VI-1
Stream Compositions

STREAM COMPOSITIONS

STREAM NAMES	Oxygen Gasifier Coal Feed	Air Gasifier Coal Feed	Oxygen Gasifier Ash	Air Gasifier Ash	Crude Gas	Gas Purification Feed	Methanation Feed	Methanation Effluent	Pipeline Gas	N_2 Waste to ATM	Methanation Condensate	Off Gas to ATM	Off Gas to Incineration	Combined Acid Gas	H_2S From Waste Liquor	Shift Effluent	Shift Feed
STREAM NUMBERS	1	2	3	4	5	6	7	8	9	10	11	12A	12B	13	14	15	16
Gas Components (Vol. %)																	
O_2	---	---	---	---	---	---	---	---	---	0.86	---	2.29	---	---	---	---	---
CO_2	---	---	---	---	28.03	32.36	3.10	1.81	1.81	---	22.58	85.45	64.79	96.12	95.91	36.95	28.03
H_2S, COS, CS_2	---	---	---	---	0.37	0.34	---	---	---	---	---	80ppm	0.06	1.06	4.09	0.32	0.37
C_2H_4	---	---	---	---	0.40	0.39	0.45	---	---	---	---	0.20	0.11	0.22	---	0.35	0.40
CO	---	---	---	---	20.20	11.70	16.91	.01	0.01	---	---	0.15	7.22	0.41	---	5.03	20.20
H_2	---	---	---	---	38.95	43.63	63.49	4.16	4.16	---	---	0.39	9.63	0.76	---	46.80	38.95
CH_4	---	---	---	---	11.13	10.70	14.93	92.93	92.93	---	77.42	0.47	2.10	0.59	---	9.75	11.13
C_2H_6	---	---	---	---	0.61	0.59	0.69	---	---	---	---	0.27	0.16	0.30	---	0.53	0.61
N_2 + Ar	---	---	---	---	0.31	0.29	0.43	1.09	1.09	---	---	---	---	---	---	0.27	0.31
N_2	---	---	---	---	---	---	---	---	---	99.14	---	10.78	15.93	0.54	---	---	---
FLOW RATES (lb/hr)																	
Total Dry Gas	---	---	---	---	2,280,447	2,450,001	829,704	513,694	513,694	1,577,467	69	1,769,323	46,513	1,670,209	8,853	1,392,164	1,246,945
Water	314,950	67,522	---	---	1,394,960	2,680	---	1,316	66	9,995	314,625	34,569	1,006	10,900	8,870	357,765	762,764
Naphtha	---	---	---	---	20,005	20,005	---	---	---	---	---	---	---	---	---	10,939	10,939
Tar Oil	---	---	---	---	28,007	---	---	---	---	---	---	---	---	---	---	15,314	15,314
Tar	---	---	---	---	7,314	---	---	---	---	---	---	---	---	---	---	3,999	3,999
Crude Phenols	---	---	---	---	9,127	---	---	---	---	---	---	---	---	---	---	4,991	4,991
NH_3	---	---	---	---	17,629	---	---	---	---	---	---	---	---	---	---	9,640	9,640
Coal (MAF)	1,250,310	268,053	19,639	4,209	---	---	---	---	---	---	---	---	---	---	---	---	---
Ash	373,220	80,012	373,220	80,012	---	---	---	---	---	---	---	---	---	---	---	---	---
Total lb/hr	1,938,480	415,587	392,859	84,221	3,757,489	2,472,686	829,704	515,010	513,760	1,587,462	314,694	1,803,892	47,519	1,681,009	17,723	1,794,812	2,054,592
(kg/hr)	(879,530)	(188,560)	(178,250)	(38,210)	(1,704,850)	(1,121,910)	(376,450)	(233,670)	(233,100)	(720,260)	(142,780)	(818,460)	(21,560)	(762,710)	(8,040)	(814,340	(932,210)
Total Gas Flow Rate x 10^6 ft^3/day	---	---	---	---	982.2	1079.7	734.9	288.6	288.6	511.0	---	386.3	11.9	351.3	1.8	612.9	537.1

Table VI-2
Component Analysis (Dry Coal)

Components	Weight %
Carbon	58.73
Hydrogen	4.30
Nitrogen	1.02
Sulfur	0.82
Oxygen	12.12
Trace compounds	0.02
Ash	22.99
Total	100.00

Rhombic-shaped units represent intermediate products (such as boiler feed water), uses (such as electric power), and sources (such as process return water), for which the distribution is not shown. Nonintegral pollutant cleanup processes are indicated by sloping rectangles. The extensive treatment and recovery processes which this symbol represents are discussed in the process description and pollution control sections of this process summary. For a thorough in-depth explanation of each licensed cleanup process mentioned, the reader is referred to readily available process literature and the bibliography included in this report. Inverted trapezoids denote residual storage.

2. PROCESS DESCRIPTION

The unit processes which comprise a possible Lurgi coal gasification system are described in this section. By-product manufacture and pollutant generation are discussed where appropriate. The discussion of pollution control processes is covered in the next section.

(1) Coal Preparation

Mined coal is crushed and screened to 3 x 0.2 cm (approximately 1-1/4 x 1/8 inch) size. The sized coal is then conveyed to coal storage bunkers atop pressurized coal lock hoppers. Coal fines, generated during this preparation, are washed and sold.

(2) Gasification

Coal is fed to the pressure gasifier (operating at a pressure of 32.3 kg/cm^2 or 445 psig) through pressurized lock hoppers. The oxygen and process steam are mixed and fed to the bottom of the gasifier. The steam is the source of hydrogen used in the process ($H_2O + C \rightarrow H_2 + CO$; $H_2O + CO \rightarrow H_2 + CO_2$). Combustion of some of the coal with oxygen ($C + O_2 \rightarrow CO_2$) supplies the heat required for gasification (621 to 760 degrees C or 1150 to 1400 degrees F). The direct reaction of hydrogen and coal produces some methane in the reactor ($2H_2 + C \rightarrow CH_4$). As the hydrogen-rich gas flows upward through this coal bed, the coal is devolatized (the volatile matter is vaporized) and gasified to produce an 11.13 percent methane gas of the composition shown in stream 5 of Figure VI-1*. This gas, which contains tar, oil, naphtha, phenols, cyanides, ammonia, sulfur compounds, and coal fines proceeds downstream for further processing. Depressurization of the coal feed lock hoppers releases a fuel gas which is collected in surge storage tanks, recompressed and added to the primary gas stream. None is released to the atmosphere. Ash is removed through ash-locks at the base of the gasifier. This ash, 5.0 percent by weight unreacted carbon (stream 3) indicates 98.4 percent gasification of the original coal feed as calculated by material balance. This carbon value is not recovered but may be discarded with the ash. The ash is granular, nearly white, and may have by-product value as concrete aggregate, or roadbed material. The sulfur content of the ash should be negligible.

---

* Source data did not quantify the composition of the hot, moist, tar-laden gas effluent from the gasifier. Stream 5 represents the composition of the cooled gas following quenching.

(3) Quench

The crude gas leaving the gasifier is quenched by a wash cooler and passed through waste heat boilers to generate 8.06 kg/cm^2 (100 psig) process steam. Condensed gas liquor is drawn off for further processing.

(4) Shift Conversion

Only about one-half of the total crude gas is subjected to shift conversion (55 percent). Here, additional hydrogen is produced to adjust the H_2:CO ratio for proper feed to the methanation reaction. In the shift reactor, carbon monoxide is catalytically converted to carbon dioxide while steam is reduced to hydrogen: $CO + H_2O \leftrightarrows CO_2 + H_2$. In this process, the ratio of the combined, shifted gas is 3.7:1 because some CO_2 is also methanated. Some unreacted hydrogen remains in the product stream too. Hot effluent gas from the exothermic shift reaction is cooled in countercurrent heat exchangers with the feed gas. The converted gas, together with the gas which bypasses the shift converter, flows to the gas cooling area for waste heat recovery and cooling.

(5) Gas Cooling

Following shift conversion, the hot gas must be cooled to facilitate subsequent purification. The cooling scheme used here, as well as throughout the plant design, has been engineered to minimize water consumption and to maximize the recovery and utilization of process heat by utilizing waste heat boiler steam generators, boiler feed water heaters, aerial coolers, and cooling water heat exchangers. This conservation of heat energy results in a coal-to-gas plant efficiency of 56.25 percent* (high compared to other Lurgi gasification plants). The hot gas liquor and tar condensed from cooling the gas is sent to separators where tar, tar-oil, phenol, and ammonia are recovered. The recovery of these impurities is discussed in Section 3 of this process summary. The liquor from these

* Derived in Energy Balance Section.

separators contains HCN which is generated during gasification. This cyanide is withdrawn and sent to the sulfur recovery stage where it is converted to thiocyanate and discarded.

(6) Purification

The acid-gas removal system, as indicated in the flow sheet (Figure VI-1), is the Rectisol process. This process uses methanol at low temperatures as the acid-gas absorbent. The product from this process is a synthesis gas, free of impurities which may otherwise harm the catalyst in the subsequent methanation step. The Rectisol process is relatively complicated, using a system of nine towers, and is not discussed in detail here. The system design for this application was based on nearly complete removal of COS from the product gas stream. The gas is first chilled and then washed in methanol where naphtha is removed. Next an absorber-regenerator set removes a concentrated H_2S stream (about 10 percent H_2S) while the majority of the CO_2 is removed in another final absorber-regenerator pair. COS is dissolved in both absorbers. The average of the two acid-gas streams is presented as stream 13 in Figure VI-1 and contains 96 percent CO_2 and 1.06 percent sulfides. Though not depicted here, actual plant design calls for the splitting of these streams to maximize sulfur abatement. The resulting CO_2 and sulfides are delivered to the sulfur recovery plant.* The methanol is recovered, regenerated, and recirculated, and the sulfur-free gas next flows to the methanator.

(7) Methanation

The purified gas is reacted in a fixed bed reactor utilizing nickel catalysts. Reaction heat from the exothermic methanation

---

* Both streams pass to separate Stretford absorbers for removal of most of the H_2S; COS and CS_2 are not removed in the Stretford facilities. The smaller, more concentrated stream (12B) is incinerated; the larger stream (12A) is vented after the Stretford with 80 ppmv sulfur. (It is further discussed in Section 3(1) of this chapter.)

reaction is removed in a waste heat boiler and used to generate process stream. Hot recycled gas is used to dilute the incoming stream for temperature control. The output (methane rich) gas, with a heating value of 8489 kcal/m^3 (954 Btu/ft^3) proceeds to final gas cleanup.

(8) Compression and Dehydration

The methane rich gas is cooled and condensed water, formed during methanation, is removed in a knockout pot. The gas is then compressed by multi-stage centrifugal compressors and cooled to 32 degrees C (90 degrees F) by air and cooling water is meet pipeline gas specifications. A small quantity of condensate is removed during compression and cooling; additional water is removed in a conventional glycol dehydrator. These condensate streams are sent to the wastewater treatment facility.

(9) Oxygen Supply

The high purity oxygen required in the Lurgi gasifier to make a high-Btu synthetic gas, 5126 m tons/day (5650 short tons/day), is manufactured on site using commercial air separation processes. Water condensed in compressing and cooling the air is recovered. A 99 percent N_2 stream is purged to the atmosphere (stream 10).

(10) Fuel Gas Production

About 17-1/2 percent of the 25,626 metric tons/day (28,247 short tons/day) of coal feedstock supplied for the process is used to produce a low Btu (1735 kcal/m^3, 195 Btu/ft^3) fuel gas. This gas feeds the gas turbines and the boilers for steam and electrical power generation. The gas is produced in a gasifier similar to that required for the high-Btu crude gas except that instead of oxygen, air is blown in to support the combustion reaction and supply heat. The residue removed is fine ash and some unreacted char (stream 4) which essentially contains no pollutants.

(11) Steam and Power Generation

An on-site conventional power generating plant will supply 58.2 MW (including 8.7 MW exported to the mine) of continuous electrical power in addition to the stream required for the plant. This is the rated electric consumption at full capacity. The total quantity of steam raised by the steam plant and process heat recovery units is 1,902,000 kg/hr (4,192,010 lb/hr). An important feature of this facility is the use of gas turbines, fueled by a gasifier product, to drive the electrical generators and plant compressors.

Boilers combusting fuel gas and air generate superheated steam which also provides motive power for turbine-driven compressors as well as providing process reaction steam. The low-Btu fuel gas, generated in the air-blown gasifier, is cleaned by a high pressure (18.6 kg/cm^2, 250 psig) Stretford process (indicated as Sulfur Recovery in Figure VI-1). Hydrogen sulfide remaining in the purified gas is less than 10 vppm, but the Stretford process cannot significantly reduce the COS content in the fuel gas. The composition of the treated fuel gas, fed to the boilers, is shown in Table VI-3. The sulfur removed, prior to combustion, results in power plant effluents (shown in Table VI-4) whose SO_2 level is 0.2 kg/10^6 kcal (0.12 lb/10^6 Btu) of fuel burned. This emission is a factor of 10 below the present permissible Federal level of 2.2 kg/10^6 kcal (1.2 lb/10^6 Btu) for coal-fired plants.* Therefore, no further stack gas cleanup is necessary.

This approach to power generation — gasification of coal, followed by fuel gas desulfurization and combustion — results in minimal sulfur emissions. However, it is penalized by high capital requirements and greater coal consumption, when compared to direct combustion of the coal.

---

* The present Federal EPA specification of 1.2 pounds/10^6 Btu is applied to coal-fired boilers. However, the El Paso facility was designed to comply with the more stringent New Mexico emission regulations.

Table VI-3
Low-Btu Fuel Gas Composition

Components	Vol. %
CO_2	14.86
$H_2S + COS$	.01*
C_2H_4	.25
CO	17.49
H_2	23.31
CH_4	5.09
C_2H_6	.38
N_2	38.61

*A small amount of naphtha present in the gas is included. This naphtha contains 0.21 percent sulfur.

Table VI-4
Composition and Quantity of Steam and Power Generation Effluents to the Atmosphere

Components	lb/hr	kg/hr	wt. %
Water vapor	270,047	122,493	3.8
Carbon dioxide	645,384	292,746	9.2
Nitrogen	5,095,317	2,311,236	72.5
Sulfur dioxide*	334	152	----
Oxygen	1,020,800	463,035	14.5
Nitrogen oxides (NO_2)	562	255	----
Particulates	Negligible	----	----

$$* \quad \frac{334 \text{ lb/hr of } SO_2}{2800 \times 10^6 \text{ Btu/hr of fuel burned}} = 0.12 \text{ lb } SO_2/10^6 \text{ Btu of fuel burned } (0.216 \text{ kg } SO_2/10^6 \text{ kcal})$$

(12) Energy Balance

The overall energy balance for the process is presented in Figure VI-1 and derived in Table VI-5. From this energy balance the process efficiency, coal-to-gas, is found to be

$$11,472 \times 10^6 \text{ Btu/hr } 20,396 \times 10^6 \text{ Btu/hr} = 56.25\%.$$

Including the heat content of by-products raises the overall energy recovered to 71.6 percent.

(13) Sulfur Balance

The sulfur balance for the 0.69 percent** sulfur Navajo coal feedstock is quantified in Table VI-6 below and discussed in Section 3 of this process summary. The reported sulfur output of 7369 kg/hr (16,246 lb/hr) is the total amount of sulfur evolved from all sources. As seen in Figure VI-1, the total sulfur output from the process is composed of 76 kg/hr (167 lb/hr) discharged to the atmosphere from the Steam and Power Plant, 60 kg/hr (133 lb/hr) discharged to the atmosphere from the Stretford sulfur recovery plant, 7068 kg/hr (15,582 lb/hr) recovered for sale as elemental sulfur, and 165 kg/hr (364 lb/hr) contained within the tar, tar oil, naphtha and ammonia by-products. Extraction of the sulfur, remaining in these saleable by-products by the seller is not considered. If further sulfur removal is required, it will be assumed to be performed by the purchaser.

(14) General Comments

The flow sheet reviewed here is an update of the flow sheet presented in the report on environmental factors submitted by the El Paso Natural Gas Company[1]. In this revision, the process has been simplified and the overall sulfur emissions have been reduced, indicating the results of continued careful engineering by El Paso and Stearns-Roger, the engineering contractor.

** Calculated on a dry, ash-free basis, the sulfur content is 1.07 percent by weight.

Table VI-5
Energy Balance Calculations

Carrier	Calculations	Energy	
		(x 10^6 Btu/hr)	(x 10^6 kcal/hr)
Coal	8,664 Btu/lb x 28,249 ton/day (net after removal of fines) x 2000 lb/ton ÷ 24 hrs/day	20,396	5,140
Total energy input		20,396	5,140
Product gas	954 Btu/ft^3 x 288.6 x 10^6 ft^3/day ÷ 24 hrs/day	11,472	2,891
Carbon in ash (total)	14086.8 Btu/lb x 23848 lb/hr	336	85
Sulfur	3,983.4 Btu/lb x 167 LT/day x 2,240 lb/LT ÷ 24 hrs/day	62	16
Tar	16,970 Btu/lb x 88,824 lb/hr	1,507	380
Tar oil	17,300 Btu/lb x 48,588 lb/hr	841	212
Phenols	14,021 Btu/lb x 11,271 lb/hr	158	40
Ammonia	9,598 Btu/lb x 107,110 lb/hr x 0.2	206	52
Naphtha	18,400 Btu/lb x 20,005 lb/hr	368	93
Cooling water	62 x 10^6 Btu/hr + 1,144 x 10^6 Btu/hr	1,206	304
Losses*	(by difference)	4,240	1,067
Total energy output		20,396	5,140

*Includes sensible heat of product, by-products and waste streams, air cooling, and other unaccounted losses.

Table VI-6
Sulfur Balance

Carrier	lb/hr	kg/hr
Coal	16,246	7,369
Total input	16,246	7,369
By-products:		
Tar	240	109
Tar oil	73	33
Naptha	40	18
Ammonia solution	11	5
Sulfur (elemental)	15,582	7,068
By-product total	15,946	7,233
Stretford sulfur plant effluents discharged to atmosphere		
H_2S	11	5
CS_2	5	2
SO_2	25	11
COS	92	42
Turbine, boiler, and heater effluents: SO_2 discharged to atmosphere	167	76
Effluent total	300	136
Total output	16,246	7,369

3. DISCUSSION OF POLLUTION CONTROL PROCESSES

The major waste streams of concern in the Lurgi process and their control treatment methods are discussed in this section and summarized in Table VI-7.

Table VI-7
Nature and Treatment of Major Waste Streams

Final Wastes	Amounts After Treatment	Sources	Treatment
Coal fines	———	Coal feed, coal crushing, screening, handling, lock hoppers	Undersized coal marketed
Ash	259,722 kg/hr	Steam-oxygen and air-blown gasifiers	Sluiceway and return to mine for landfill
Gas liquor	77,180 kg/hr Tar, tar oil phenols ammonia HCN H_2S	Quench and gas cooling	Separators, extractors, Phenosolvan process steam stripping
Hydrogen sulfide, carbonyl sulfide, and carbon disulfide	86 kg/hr	Rectisol regenerator	Stretford process
Sulfur dioxide	174 kg/hr	Gas fired turbines, boilers, heaters, incinerators	None; amounts are well below maximum permitted levels

(1) Sulfur Recovery

The H_2S removed from the product gas during the gas purification Rectisol process is treated in two low pressure Stretford units to produce elemental sulfur. The fuel gas produced in the air blown Lurgi gasifier is similarly treated in a high pressure Stretford unit. The Stretford process was developed by the British Gas Council and is now commercially available through several U. S. licensors. The sulfur not recovered from the gas by the Stretford units appears either as SO_2 in the boiler stacks (shown in Table VI-4) or is vented to the atmosphere directly (stream 12A) or after incineration. The total sulfur compounds vented to the atmosphere by the Stretford sulfur recovery units are identified and quantified below in Table VI-8. These emissions are below the New Mexico regulatory limits.

Table VI-8
Sulfur Compounds Vented to
Atmosphere from Stretford Units

	Compound (Flow Rate)		Sulfur in Compound* (Flow Rate)	
	lb/hr	kg/hr	lb/hr	kg/hr
Carbonyl sulfide	172	78	92	42
Carbon disulfide	6	3	5	2
Hydrogen sulfide	12	5	11	5
Sulfur dioxide (after incineration)	50	23	25	11

*Same as shown in Table VI-6.

Note: The Rectisol process sorbs approximately 80 percent of the carbonyl sulfide into the CO_2-rich gas. Only 20 percent of the original COS reports to the H_2S rich gas which proceeds to incineration.

(2) Ash Disposal

Ash discharged from both the air and oxygen blown gasifiers via ash locks is transported, with water discharged from wastewater treatment, through a sluiceway to separation equipment. Dewatered ash from the separation equipment is returned to the mine for disposal and the slurry water is sent to evaporation ponds (pond size not yet determined).

Alternatively, the clean ash from this system can be used for concrete aggregate or roadbeds as is practiced by the South African Coal, Oil and Gas Company (SASOL) and the Westfield Lurgi plant in Westfield, Scotland.

(3) Gas Liquor Cleaning

The aqueous stream condensed during quenching and cooling of the hot product gas and fuel gas passes through separators where tar and tar oil is withdrawn. The coal tar (a dark, bituminous, viscous liquid condensed and distilled from the gas stream) has a heating value of about 8500 to 9500 kcal/kg

(15,000 to 17,000 Btu/lb). The tar oil (a lighter distillate fraction containing cresote oil, anthracene oil and similar aromatic compounds) has the same heating value as the coal tar fraction. The clarified gas liquor is next treated in a Phenosolvan process where organic solvents extract crude phenols for sale. A deacidifier removes dissolved HCN, CO_2 and H_2S and returns them for sulfur recovery (stream 14). The HCN is converted to thiocyanate in the oxidizer section of the Stretford system, and the thiocyanates are eliminated from the system in the wastewater to evaporation ponds. This Stretford bleed stream may also contain an undetermined amount of thiosulfates and vanadates.

(4) Water Treatment

Raw water is subjected to chemical treatment by lime softeners and then filtered. Low pressure boiler feedwater is softened by zeolite treatment while water for process steam and high pressure boilers is demineralized. The liquid effluent discharges from water treatment are used as part of the carrier to facilitate ash removal and are disposed of as land fill with the ash or evaporated in evaporation ponds. The precise pollutant composition of this contaminated liquid stream is not available but it can be approximately quantified as:

818 l/min	(216 gal/min)	of lime treater sludge
2260 l/min	(597 gal/min)	of boiler and cooling tower blowdown
1245 l/min	(329 gal/min)	of contaminated gas liquor
382 l/min	(101 gal/min)	of liquid waste from plant's utility systems*
4705 l/min	(1243 gal/min)	Total

* For example, plant firewater system and sanitary sewage treating plant.

(5) Coal Fines

The Lurgi gasifier will not directly accept coal fines. The feed to the gasifier is screened at 2 mm bottom-size and the undersize material can be washed and marketed. The term "coal fines" as used in this synopsis refers to undersize coal too small for feed to the gasifier. The undersize coal in this operation, however, may be acceptable feed for many other process gasifiers. As much as 25-40 percent of the mine output, depending upon mining and crushing techniques, will be too fine for operation in the Lurgi gasifier. The sulfur in the waste stream from coal washing will primarily be in the form of iron pyrites. The ultimate disposal of pyrites might be accomplished by blending them into the alkaline gasifier ash and then returning the resultant mixture to the mine. This subject is discussed in Chapter III of this report.

(6) Tars

The Lurgi gasification system generates significant quantities of heavy tars. According to published data[1], since these tars contain only 0.27 percent sulfur, they could be directed combusted for heating in many locations. El Paso has investigated the alternatives of either reinjection of the tar into the gasifier for ultimate hydrocracking into oils and gas, or of partial oxidation to produce synthesis gas in a manner similar to that used in the Shell and Texaco Partial Oxidation processes (discussed in Chapter X).

(7) Oils and Naphtha

The oils and naphtha by-products from the gasification system (noted earlier in Table VI-6) contain small concentrations of organic sulfides. This sulfur can readily be removed from the by-products by distillate hydrodesulfurization. Hydrodesulfurization techniques are discussed elsewhere in this report.

4. COSTS OF POLLUTION CONTROL*

Costs of the pollution control and treatment processes described in Section 3 are calculated here. The application of the Lurgi process for high-Btu, sulfur-free gas is not a commercial reality. For this reason the cost figures given in this section are based on:

- Cost estimates provided by Lurgi Mineralöltechnik GmbH. Lurgi, the process developer, has accumulated much cost experience in low- and medium-Btu gas (200-450 Btu/ft^3 or 1800-4000 kcal/m^3) producing facilities which have been commercialized for many years.

- An economic evaluation, by Stearns-Roger, Inc., for the El Paso Natural Gas Company of a high-Btu Lurgi plant.

- Costs derived from commercial experience for similar pollution control processes.

The major assumptions and conventions adopted here are discussed in Chapter III of this report. All by-product flow rate data presented in Figure VI-1 apply. The value of tar, tar oil, and undersize coal is included as part of the overall process cost rather than as by-product credits from pollution abatement operations. These by-products would be recovered in the basic operation of a facility even if emission control were not practiced. In the alternative costing of generating process power and steam is by direct combustion of coal, however, the value of the reduced amount of tar and tar oil by-product is considered as an incremental cost (at \$0.50/10^6 Btu).

The incremental** capital and operating costs for pollution controls are reported for the Lurgi process using indirect combustion of coal (gasification of coal, and sulfur removal prior to combustion to generate steam and electrical power needed in the process) and using

---

* The costs presented here are preliminary estimates; the actual costs of emission control in this process will not be known until a full-scale facility has been constructed and operated.

** Incremental costs in this report refer to that portion of the total plant cost that is assignable to pollution control facilities.

direct combustion of coal. In the latter case, the sulfur effluent appears as SO_2 and must be removed from the stack gases. For this case it was assumed that the boiler house of a typical gasification plant would comply with the Federal emission standards rather than the more stringent New Mexico regulations.

Capital investment requirements are shown in Table VI-9 and annual operating expenses are given in Table VI-10. Both capital and operating costs of direct combustion of coal for steam and power generation are less than those for indirect combustion (gasification) of coal prior to combustion). The savings occur from not requiring a second gasification system (the air-blown gasifier shown in Figure VI-1), to supply the desulfurized fuel gas for steam and power generation, costing in excess of $20 million, and from reduced maintenance and labor requirements. Further savings may be realized by burning the coal fires directly, rather than cleaning them for sale, if permitted by local emission standards.

The derivation of the formulae for calculating the incremental cost of gas production due to pollution control is presented in Chapter III of this report. For the discounted cash flow (DCF) method, the required incremental annual cost of gas, X, for the assumed rate of return is:

$$X = N + 0.23816\ I + 0.1275\ S + 0.230777W$$

where

N = incremental net operating cost
I = incremental plant investment
S = startup costs
W = incremental working capital

For the utility financing case, it is:

$$X = N + 0.1198C + 0.0198W$$

where

C = required incremental capital investment
N = as defined above
W = as defined above

Table VI-9
Incremental Capital Investment[a] ($ Million)

Item	Indirect Combustion of Coal		Direct Combustion of Coal*	
Incremental plant investment[b]				
Coal fines cleaning	4.3		3.8	
Phenosolvan phenol extraction	7.0		6.1	
Gas liquor stripping (ammonia recovery)	6.1		5.3	
Stretford sulfur recovery	8.2		5.5 (high pressure Stretford	
Fuel gas production	21.6		-- unit not required)	
Fuel gas cleaning	5.3		--	
Incremental cost of steam and power generation and compressed air facilities	15.2		11.0	
Limestone scrubbing for SO_2 recovery	—		16.4	
Incremental cost of coal-fired boiler	—		6.0	
Subtotal plant investment	67.7		54.1	
Project contingencies[c]	10.2		8.1	
Incremental plant investment (I)	77.9	77.9	62.2	62.2
Startup costs[d] (S)	1.8	1.8	1.6	1.6
	Utility	DCF	Utility	DCF
Interest during construction[e]	13.1	18.4	10.5	14.7
Incremental working (capital[f] (W))	1.4	1.8	1.0	1.3
Incremental capital investment (C)	94.2	99.9	75.3	79.8

Notes:

a. Incremental plant investment, return on investment during construction and working capital are treated as capital cost in year 0 (the year ending with completion of startup operation).

b. Installed costs, including engineering design costs, contractors' profit, overhead, and licenses with no contingencies.

c. Includes costs for unexpected site preparation and hardware requirements at 15% of plant investment.

d. AT 20% of incremental gross operating cost.

e. For the DCF method, computed as the discount rate x incremental plant investment for 1.875 years' average construction period. $I(1+i)^n = I(1.12)\ 1.875 = 1.23676I$ or $0.23676I$ additional investment.

For the utility financing method, computed as the interest rate on debt x incremental plant investment x 1.875 years

f. Sum of materials and supplies at .9% of incremental plant investment and net receivables at 1/24 of annual incremental revenue.

*The costs for direct combustion of coal for power generation were derived in this study for comparison purposes.

Table VI-10
Incremental Annual Operating Cost ($)

Labor	Indirect Combustion of Coal		Direct Combustion Coal	
Direct operating labor (12 men/shift x $5/hr x 8,304 shift hrs./man yr.)	498,200		(8 men/shift) 332,200	
Maintenance labor (1.5% of I)	1,168,500		933,000	
Supervision (15% of direct operating and maintenance labor)	250,000		189,800	
Incremental labor cost		1,916,700		1,455,000
Administration and general overhead (60% of incremental labor)		1,150,000		873,000
Other direct costs*		2,500,000		3,000,000
Supplies				
Operating (30% of direct operating labor)	149,500		99,700	
Maintenance (1.5% of I)	1,168,500		933,000	
Incremental cost of supplies		1,318,000		1,032,700
Local taxes and insurance (2.7% of I)		2,103,300		1,679,400
Incremental gross operating cost		8,988,000		8,040,100
By-product credits (recovered in abatement process units)				
Crude phenols (11,271 lb/hr x $0.04/lb x 0.9 capacity factor x 365 days/yr x 24 hr/day)	3,554,400		3,491,700	
Sulfur (167 LT/day x 365 days/yr x 0.9 capacity factor x $10/LT)	548,600		450,000 (137 LT/day)	
Ammonia (107,110 lb/hr x 0.2,% NH ÷ 2000 short tons/lb x 24 hr/day x 365 days/yr x 0.9 capacity factor x $25/short ton)	2,111,100		2,073,800 (105,219 lb/hr)	
Coal saved due to direct combustion (41,551 lb/hr at $227/ton)	--		453,700	
Reduction in tar, tar-oil and naphtha recovered @ $0.50/$10^6$Btu	--		-195,600	
Less by-product credits		-6,214,100		-6,273,600
Incremental net operating cost (N)		2,773,900		1,766,500

*This item includes incremental costs of chemicals, catalysts and make-up water.

Annual gas production, G for the El Paso plant is:

$$(288.6 \times 10^6 \text{ ft}^3/\text{day})\ (954 \text{ Btu/ft}^3)\ (365 \text{ days/yr})\ (0.9 \text{ capacity factor assumed}) = 90.444 \times 10^{12} \text{ Btu/yr}\ (22.792 \times 10^{12} \text{ kcal/yr})$$

This can be regarded as a typical production rate for a commercial Lurgi plant. Therefore, the incremental cost of gas, due to pollution controls is:

$$\frac{\text{annual cost of gas}}{\text{annual gas production}} = \frac{X}{G} = \frac{X}{90.444 \times 10^{12} \text{ Btu/yr}}$$

Solutions to the above equations for the incremental cost of gas are shown in Table VI-11. Though the direct combustion of coal is less expensive, and uses 10 percent less coal, it releases 10 times as much sulfur to the atmosphere. In the direct combustion of coal after stack gas scrubbing, 1.2 lb. 10^6 Btu (2.16 kg/10^6 kcal) is released in the form of SO_2——the present permissible new source standard——whereas only 0.214 kg/10^6 kcal (0.12 lb/10^6 Btu) is released from the Lurgi process.

Table VI-11
Incremental Cost of Gas

	Direct Combustion of Coal*		Indirect Combustion of Coal †	
Accounting Method	Incremental Annual Cost of Gas ($/Yr)	Incremental Cost of Gas ($/$10^6$ Btu)	Incremental Annual Cost of Gas ($/Yr)	Incremental Cost of Gas ($/$10^6$ Btu)
DCF	17,077,100	0.19	21,971,500	0.24
Utility Financing	10,807,200	0.12	14,086,800	0.16

*Combustion required for steam and power generator occurs at the gasification plant site.

†Low-Btu gasification of coal, followed by desulfurization and combustion of gas.

REFERENCES

(1) Second Supplement to Application of El Paso Natural Gas Company for a Certificate of Public Convenience and Necessity, Proposed by Stearns-Roger Inc., FPC Docket No. CP-73-131, October 8, 1973.

(2) "The Supply-Technical Advisory Task Force—Synthetic Gas-Coal," Final Report, Federal Power Commission, April 1973.

(3) Private communication, El Paso Natural Gas Company, October 1973.

VII. THE HYGAS PROCESS

The Hygas process is an advanced coal gasification system which can use all domestic coals including high volatile bituminous feeds. The Institute of Gas Technology (IGT), in Chicago, started process development of Hygas in 1946 under the sponsorship of the American Gas Association (AGA). Largely due to this early development, Hygas is currently the most highly developed of the advanced coal gasification processes. From 1964 to the present, the U.S. Department of the Interior's Office of Coal Research (OCR) has joined the AGA in supporting this R&D effort. As of August 1972, $17 million had been spent on process development.

The Hygas process, like most advanced coal gasification processes, utilizes the hydrogasification reaction to produce methane. Two-thirds of this product gas is produced directly in the prime reaction. Maximizing direct methane formation improves the process thermal efficiency and decreases the extent of catalytic methanation. The gasification reactor operates at 70 to 105 kg/cm^2 (1000 to 1500 psi). Coal is gasified in two fluidized bed stages: a low-temperature stage, with temperatures of 650 degrees to 760 degrees C (1200 degrees to 1400 degrees F), gasifies the most reactive portions of the feed and forms large amounts of methane directly; the second stage, operating at up to 1010 degrees C (1850 degrees F), gasifies the less reactive portions. Residual carbon from this stage is withdrawn and used to generate the hydrogen needed for hydrogasification. A mixture of steam, hydrogen, carbon monoxide, methane, and other reaction products serve as fluidizing gases. The steam also aids in controlling gasifier reaction temperatures.

Three alternatives have been studied on ways to generate hydrogen from the carbon residue. These include:

- Electrothermal gasification — heat required for the steam-carbon reaction is supplied by passing an electric current through the bed of fluidized solids

- Steam-oxygen gasification — partial combustion of the residual char with oxygen supplies the heat required for the steam-carbon reaction

Steam-iron reaction—hot reduced iron reacts with steam to form a hydrogen-rich gas. The iron is reduced in a separate vessel by gas generated from char by partial combustion with air and steam.

The steam-oxygen method was selected for this analysis since it will probably be the first system commercialized. In the long term, however, the steam-iron process holds promise for being the most economical.

As with all high-pressure gasification systems, introducing feed solids and removing ash solids from the pressurized gasifier require process development. For this analysis, a slurry feed system is used instead of a high pressure lock hopper system (which is not yet proven). Solids are introduced into the gasifier as a slurry with oil; solids are removed by depressurizing in a slurry with water.

In 1968, a detailed design was started for a $7 million Hygas pilot plant to further process development. Construction of this pilot plant was completed at IGT in early 1971 by Procon, Inc. This pilot plant has now operated at design capacity producing pipeline quality gas from 68 m tons/day (75 short tons/day) of coal. Tests to date have used North Dakota Lignite feedstock. In September 1972, the AGA/OCR awarded a 34-month contract to continue plant operation with other ranks of coal and to install the steam-oxygen method of hydrogen production in the pilot plant. Procon has also completed a preliminary design of a demonstration plant to convert 4540 m ton/day (5000 short tons/day)of bituminous coal to $2.3 \times 10^6 m^3$/day ($80 \times 10^6 ft^3$/day) of pipeline gas.

A full-scale commercial plant, producing $7.1 \times 10^6 m^3$/day ($250 \times 10^6 ft^3$/day) of pipeline gas, could be operational by 1981.

1. PROCESS DISPLAY

Schematic flow diagrams were developed for the Hygas process using a Montana subbituminous coal feed (Figure VII-1) and an Illinois No. 6 coal feed (Figure VII-2). Energy balances for each case are included on the schematics and calculated in Section 2 of this analysis. Stream compositions and flow rates are presented in tabular form following Figures VII-1 and VII-2. Design basis is a plant to produce $7.1 \times 10^6 m^3$/day ($250 \times 10^6 ft^3$/day) of pipeline gas.

FIGURE VII-1
The Hygas Process—Montana
Subbituminous

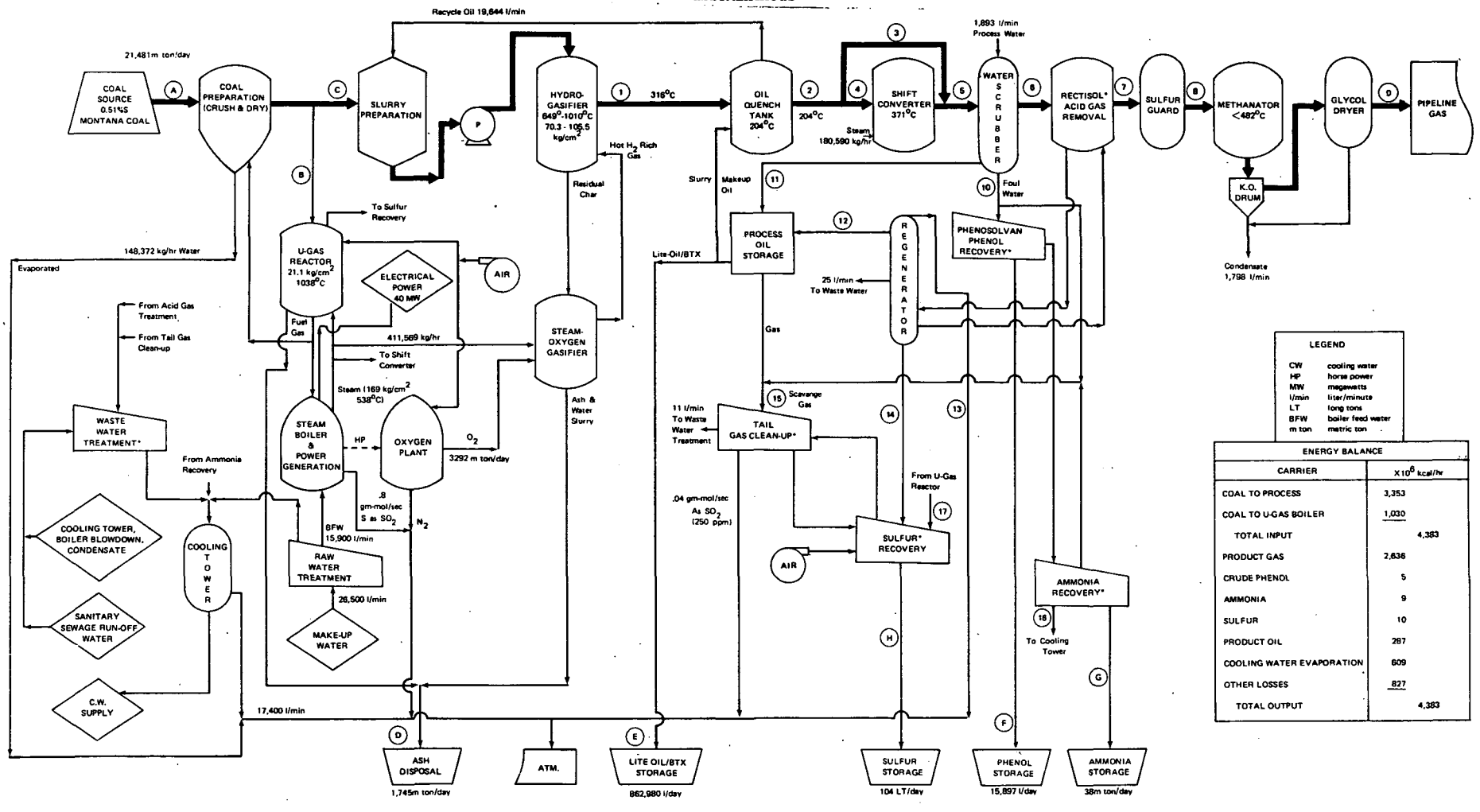

LEGEND

CW	cooling water
HP	horse power
MW	megawatts
l/min	liter/minute
LT	long tons
BFW	boiler feed water
m ton	metric ton

ENERGY BALANCE

CARRIER	$X10^6$ kcal/hr	
COAL TO PROCESS	3,353	
COAL TO U-GAS BOILER	1,030	
TOTAL INPUT		4,383
PRODUCT GAS	2,636	
CRUDE PHENOL	5	
AMMONIA	9	
SULFUR	10	
PRODUCT OIL	287	
COOLING WATER EVAPORATION	609	
OTHER LOSSES	827	
TOTAL OUTPUT		4,383

*Specific Treatment and Recovery Processes Were Selected by Senior IGT Advisors for This Analysis.

FIGURE VII-2
The Hygas Process—Illinois
No. 6 Coal

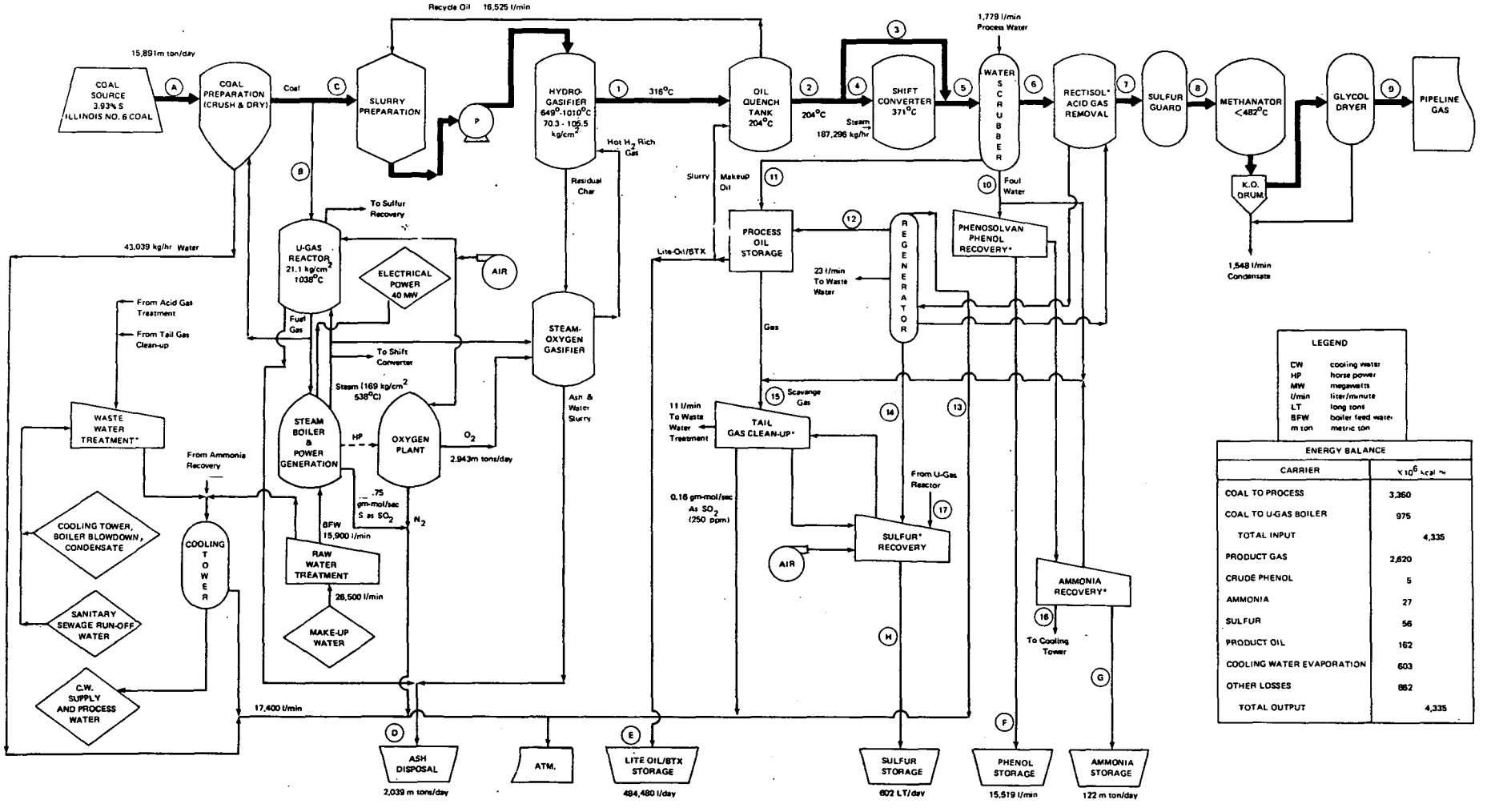

LEGEND

CW	cooling water
HP	horse power
MW	megawatts
l/min	liter/minute
LT	long tons
BFW	boiler feed water
m ton	metric ton

ENERGY BALANCE

CARRIER	$\times 10^6$ kcal/hr	
COAL TO PROCESS	3,360	
COAL TO U-GAS BOILER	975	
TOTAL INPUT		4,335
PRODUCT GAS	2,620	
CRUDE PHENOL	5	
AMMONIA	27	
SULFUR	56	
PRODUCT OIL	162	
COOLING WATER EVAPORATION	603	
OTHER LOSSES	862	
TOTAL OUTPUT		4,335

*Specific Treatment and Recovery Processes Were Selected by Senior IGT Advisors for This Analysis.

(1) Basis for Analysis

The process design contained in this report of the Hygas process was specifically supplied for this study by the process designer - IGT. This design is based on published and non-proprietary data. The flow sheets depict a second-generation Hygas plant which incorporates features that have been, or are soon expected to be developed. Process flow designs were prepared for both a low-sulfur western coal and a high-sulfur mid-western coal. The moisture-free compositions of these selected feedstocks are shown in Table VII-1.

Table VII-1
Component Analysis (Dry Coal)

Component	Montana Subbituminous (22% Moisture) Weight, %	Illinois No. 6 (6.5% Moisture) Weight, %
Carbon	68.12	69.40
Hydrogen	4.64	4.80
Oxygen	18.57	8.71
Nitrogen	0.85	1.35
Sulfur	0.66	4.20
Ash	7.16	11.54
Total	100.00	100.00

Product gas heating values for each feed are approximately 63 x 10^9 kcal/day (250 x 10^9 Btu/day). For the Montana subbituminous coal, 21,481 m tons/day (23,678 short tons/day) of feed is required to produce an 8596 kcal/m^3 (966 Btu/ft^3) gas. For Illinois No. 6 coal, 15,891 m tons/day (17,517 short tons/day) of feed is required to produce an 8569 kcal/m^3 (963 Btu/ft^3) gas. The coal-to-gas thermal efficiency for these plants is determined to be about 60.1 percent, and the overall efficiency to useful products is about 66-67 percent.

Higher thermal efficiencies have been reported in published literature for this process. The figures quoted here have been affected by the properties of the coal feedstock:

- High oxygen content of the Montana coal consumes some of the hydrogen that would have otherwise been available for methane formation

- High sulfur content of the Illinois coal also reacts with some of the hydrogen thereby decreasing the quantity of gas methanated

- Oil-forming characteristics of both feed coals restrict the quantity of gas produced

- Chemical characteristics of these coals for direct methane formation during primary gasification are lower than for some coals reported in the literature

- U-Gas system for generating steam and power with minimal emissions has inherent inefficiencies.

(2) Layout and Symbols

The general direction of process flow is from the coal supply on the left to the product gas on the extreme right of the flow diagram with residuals and by-products shown along the bottom. A bold line indicates the flow of the primary gasification process.

The figures contained within the circles refer to the solid, liquid and gaseous streams described in Table VII-2 for the Montana coal and in Table VII-3 for the Illinois coal. Numbers are used to depict intermediate streams while letters denote coal feeds, by-products, and residual products.

The Rhombic-shaped units represent intermediate products and sources for which the distribution is not shown. Nonintegral pollutant cleanup processes are indicated by sloping rectangles. Inverted trapezoids denote residual or by-product storage.

2. PROCESS DESCRIPTION

The unit processes which define the Hygas process are described in this section, with discussion of the generation of pollutants and the

Table VII-2
Montana Coal Stream Compositions

Stream name	Raw Gas		Oil Quench Effluent		Shift By Pass		CO Shift Feed		Combined Shift Effluent		Scrub Effluent		Acid Gas Effluent		Methanation Feed		Product Gas	
Stream number	1		2		3		4		5		6		7		8		9	
Temperature, °C	316		204		204		--		52		52		38		38		38	
Pressure, kg/cm^2	81		81		81		81		79		79		70		70		70	
Component	lb-mol/hr	mol %	lb-mol/hr	mol %	lb-mol/hr	mol %	lb-mol/hr	mol %	lb-mol/hr	mol %	lb-mol/hr	mol %	lb-mol/hr	mol %	lb-mol/hr	mol %	lb-mol/hr	mol %
CO	28,161	21.97	28,161	24.99	9,387	24.99	18,774	19.31	13,177	9.78	13,172	12.89	13,161	19.29	13,161	19.29	28	0.10
CO_2	18,077	14.11	18,077	16.04	6,025	16.04	12,052	12.40	33,069	24.54	32,721	32.02	100	0.15	100	0.15	55	0.19
H_2	27,148	21.18	27,148	24.09	9,049	24.09	18,099	18.62	42,140	31.26	42,124	41.22	41,975	61.51	41,975	61.51	1,866	6.51
H_2O	22,829	17.81	22,829	20.27	7,620	20.27	37,308	38.38	29,928	22.20	180	0.18	--	--	--		2	0.01
CH_4	12,508	9.76	12,508	11.10	4,169	11.10	8,339	8.58	12,508	9.28	12,501	12.24	12,449	18.24	12,449	18.24	26,693	93.13
C_2H_6	1,013	0.79	1,013	0.90	338	0.90	675	0.69	1,013	0.75	1,013	0.99	533	0.78	533	0.78	--	
C_6H_6	225	0.18	225	0.20	75	0.70	150	0.15	225	0.17	218	0.21	--		--			
NH_3	196	0.15	196	0.17	65	0.17	131	0.13	204	0.15	--							
HCN	12	0.01	12	0.01	4	0.01	8	0.01	4									
H_2S	2,394	0.19	2,394	0.21	79.8	0.21	159.6	0.16	239.2	0.18	228.2	0.22	trace	0.1 ppm	--			
COS	2.4	--	2.4	--	0.8	--	1.6		2.6		2.6	--	--					
N_2	18	0.01	18	0.02	6	0.02	12	0.01	18	0.01	18	0.02	18	0.03	18	0.03	18	
Phenol	8	0.01	8	0.01	3	0.01	5	0.01	8	0.01								
Oil	17,723	13.83	2,246	1.99	748	1.99	1,498	1.54	2,246	1.67	6	0.01	--					
Total lb-mol/hr	128,160	100.00	112,683	100.00	37,570	100.00	97,212	100.00	134,782	100.00	102,185	100.00	68,236	100.00	68,236	100.00	28,662	
(gm-mol/sec)	(16,162)		(14,210)		(4,740)		(12,260)		(17,000)		(12,890)		(8,605)		(8,605)		(3,615)	
(x10^6 ft^3/hr)	48.6		42.7		14.2		36.8		51.0				25.9		25.9		10.9	

Note: All flow rates are rounded to the nearest mol/hr except for sulfur-bearing compounds. Volume flow rates are calculated at normal conditions of 14.7 psia, 60°F.

Table VII-2
(Continued)

Stream name	Foul Water		Oil		BTX-Oil		Acid Gas CO_2 Vent to Stack		H_2S Stream to Claus Unit		Scavanged Gas		Wastewater		SO_2 From U-Gas	
Stream number	10		11		12		13		14		15		16		17	
Component	lb-mol/hr	mol %	lb-mol/hr	mol %	lb-mol/hr	mol %	lb-mol/hr	mol %	lb-mol/hr	mol %	lb-mol/hr	mol %	lb-mol/hr	mol %	lb-mol/hr	mol %
CO	5	0.01					11	0.03			5	1.27				
CO_2	348	0.79					32,089	97.88	532	70.00	348	88.37				
H_2	16	0.04					149	0.45			16	4.06				
H_2O	43,625	98.63					--				6	1.52	43,619			
CH_4	7	0.02					52	0.16			7	1.78				
C_2H_6							480	1.46								
C_6H_6	7	0.02			218	96.89										
NH_3	204	0.46												5 ppW		
HCN	4	0.01									4	1.02		12 ppmW		
H_2S	8	0.01	3	0.13	1	0.44	0.3	5 ppmV	226.9	29.86	78	1.98	0.2	10 ppmW		
COS		2 ppmW					1.3	12 ppmV	1.3	0.14		76 ppmV				
N_2															257	79.25
Phenol	8	0.01												20 ppmW		
Oil			2,240	99.87	6	2.67										
SO_2															67.3	20.75
Total lb-mol/hr	44,232	100.00	2,243	100.00	225	100.00	32,783	100.00	760		394	100.00	43,619		324	100.00
(gm-mol/sec)	(5,580)		(283)		(28)		(4,134)		(96)		(50)		(5,500)		(41)	
($\times 10^6$ ft^3/hr)	0.013		4.8×10^{-3}		4.8×10^{-4}		12.4		0.3		0.1		0.013		0.1	

Note: All flow rates are rounded to the nearest mol/hr except for sulfur-bearing compounds. Volume flow rates are calculated at normal conditions of 14.7 psia, 60°F.

Table VII-2
(Continued)

Stream name	Combined Coal Feed	Coal to U-Gas System	Coal to Hygas System	Ash	By product Oil-BTX	Crude Phenol	Anhydrous Ammonia	By product Sulfur
Stream number	A	B	C	D	E	F	G	H
kg/hr	895,017 kg/hr (22% Moisture)	175,388 kg/hr (6.5% Moisture)	571,258 kg/hr (6.5% Moisture)	72,727 kg/hr	32,154 kg/hr	342 kg/hr	1,576 kg/hr	4405 kg/hr
Component	wt% dry	wt% dry	wt% dry		lb-mol/hr	lb-mol/hr	lb-mol/hr	lb-mol/hr
C	68.12	68.12	68.12	10.2% Carbon	C_6H_6 218	C_6H_6 7	NH_3 204	Sulfur 302.9
H	4.64	4.64	4.64	0.07% Sulfur	H_2S 4	Phenol 8		
O	18.57	18.57	18.57		Oil 398			
N	0.85	0.85	0.85					
S	0.66	0.66	0.66					
Ash	7.16	7.16	7.16					
Total (gm-mol/sec)	100.00	100.00	100.00		620 (78)	15 (2)	204 (26)	302.9 (38)

Table VII-3
Illinois No. 6 Coal Stream Compositions

Stream name	Raw Gas		Oil Quench Effluent		Shift By-Pass		CO Shift Feed		Combined Shift Effluent		Scrub Effluent		Acid Gas Effluent		Methanation Feed		Product Gas	
Stream number	1		2		3		4		5		6		7		8		9	
Temperature, °C	316		204		--		52		52		52		38		38		38	
Pressure, kg/cm^2	81		81		81		79		79		79		76		76		70	
Component	lb-mol/hr	mol %	lb-mol/hr	mol %	lb-mol/hr	mol %	lb-mol/hr	mol %	lb-mol/hr	mol %	lb-mol/hr	mol %	lb-mol/hr	mol %	lb-mol/hr	mol %	lb-mol/hr	mol %
CO	23,217	19.84	23,217	22.25	7,739	22.25	15,478	16.74	11,304	8.88	11,299	12.04	11,290	18.00	11,290	18.00	28	0.10
CO_2	17,359	14.83	17,359	16.64	5,786	16.64	11,573	12.51	29,294	23.02	28,946	30.85	88	0.14	88	0.14	38	0.13
H_2	24,167	20.66	24,167	23.16	8,056	23.16	16,111	17.42	36,106	28.37	36,090	38.46	35,971	57.33	35,971	57.33	1,866	6.54
H_2O	19,501	16.66	19,501	18.69	6,500	18.69	35,920	38.84	30,459	23.93	165	0.18	--				2	0.01
CH_4	15,260	13.04	15,260	14.63	5,087	14.63	10,173	11.00	15,260	11.99	15,253	16.26	15,212	24.25	15,212	24.25	26,524	93.01
C_2H_6	502	0.43	502	0.48	167	0.48	335	0.36	502	0.39	502	0.54	119	0.19	119	0.19		
C_6H_6	149	0.13	149	0.14	50	0.14	99	0.11	149	0.12	142	0.15						
NH_3	628	0.54	628	0.60	209	0.60	419	0.45	654	0.51	--							
HCN	39	0.03	39	0.04	13	0.04	26	0.03	13	0.01	--							
H_2S	1,361.6	1.16	1,361.6	1.30	453.9	1.30	907.7	0.98	1,357.9	1.07	1,348.4	1.44	trace	0.1 ppmV				
COS	11.8	0.01	11.8	0.01	3.9	0.01	7.9	0.01	15.5	0.01	15.5	0.02						
N_2	59	0.05	59	0.06	20	0.06	39	0.04	59	0.05	59	0.06	59	0.09	59	0.09	59	0.21
Phenol	8	--	8	0.01	3	0.01	5	0.01	8	0.01								
Oil	14,765	12.62	2,079	1.99	693	1.99	1,386	1.50	2,079	1.63	6	0.01						
Total lb-mol/hr	17,027	100.00	104,341	100.00	34,781	100.00	92,480	100.00	127,260	100.00	93,826	100.00	62,739	100.00	62,739	100.00	28,517	100.00
(gm-mol/sec)	(2,150)		(13,160)		(4,390)		(11,660)		(16,050)		(11,830)		(7,910)		(7,910)		(3,600)	
(x10^6 ft^3/hr)	44.3		39.5		13.2		35.1		48.2		35.6		23.8		23.8		10.8	

Note: All flow rates are rounded to the nearest mol/hr except for sulfur bearing compounds. Volume flow rates are calculated at normal conditions of 14.7 psia, 60°F.

Table VII-3
(Continued)

Stream name	Foul Water		Oil		BTX- Oil		Acid Gas CO_2 Vent to Stack		H_2S Stream to Claus Unit		Scavanged Gas		Wastewater		SO_2 From U-Gas	
Stream number	10		11		12		13		14		15		16		17	
Component	lb-mol/hr	mol %	lb-mol/hr	mol %	lb-mol/hr	mol %	lb-mol/hr	mol %	lb-mol/hr	mol %	lb-mol/hr	mol %	lb-mol/hr	mol %	lb-mol/hr	mol %
CO	5	0.01					9	0.03			5	1.20				
CO_2	348	0.78					25,696	97.87	3,162	70.00	348	86.45				
H_2	16	0.04					119	0.45			16	3.97				
H_2O	43,338	97.61									6	1.49	43,332			
CH_4	7	0.02					41	0.16			7	1.74				
C_2H_6	--						383	1.46			--					
C_6H_6	7	0.02			142	95.50										
NH_3	654	1.47											0.2	5 ppmW		
HCN	13	0.03									12.7	3.16	0.3	12 ppmW		
H_2S	8		1.5	0.07	0.7	0.47	0.3	--	1,347.4	29.83	7.8	1.94	0.20	10 ppmW		
COS	0.03	--					7.7	0.03	7.8	0.17	0.03	0.01				
N_2	--														1,475	79.00
Phenol	8	0.02											0.2	20 ppmW		
Oil			2073	99.93	6	4.03										
SO_2															392.1	21.00
Total lb-mol/hr	44,404	100.00	2075	100.00	149	100.00	26,256	100.00	4,517	100.00	403	100.00	43,333		1,867	100.00
(gm-mol/sec)	(5,600)		(260)		(20)		(3,310)		(570)		(50)		(5,470)		(235)	
($\times 10^6 ft^3/hr$)	0.014		4.4×10^{-3}		3.6×10^{-4}		9.9		1.7		0.2		0.014		0.7	

Note: All flow rates are rounded to the nearest mol/hr except for sulfur bearing compunds. Volume flow rates are calculated at normal conditions of 14.7 psia, 60°F.

Table VII-3
(Continued)

Stream Name	Combined Coal Feed	Coal to U-Gas System	Coal to Hygas System	Ash	By-Product Oil-BTX	Crude Phenol	Anhydrous Ammonia	By-Product Sulfur
Stream Number	A	B	C	D	E	F	G	H
kg/hr	662,139 (6.5% Moisture	139,347 dry	479,853 dry	84,974	18,047	581	5050	25,505
Component	wt% dry	wt% dry	wt% dry		lb-mol/hr	lb-mol/hr	lb-mol/hr	lb-mol/hr
C	69.40	69.40	69.40	10.3% of Carbon	C_6H_6 142	C_6H_6 7	NH_3 653.8	Sulfur 1753.8
H	4.80	4.80	4.80	0.3% of Sulfur	H_2S 2.2	Phenol 7.8		
O	8.71	8.71	8.71		Oil 212			
N	1.35	1.35	1.35					
S	4.20	4.20	4.20					
Ash	11.54	11.54	11.54					
Total	100.00				356.2	14.8	653.8	1753.8
gm-mol/sec					(45)	(2)	(82)	(221)

manufacture of by-products given where appropriate. Pollutant control and cleanup processes are covered in the next section.

(1) Coal Preparation

Mined coal can be transported to the plant site by conveyor belt, train, or truck. The coal stockpile will contain a 30- to 90-day plant feed supply. The coal is fed to crushers which reduce its size to finer than 8 mesh. A minimum amount of 100 mesh fines is produced. The coal is dried to near zero moisture content in low-Btu gas-fired fluidized bed dryers. Approximately 20 percent of the dried coal is utilized as feed to the U-Gas system, which generates a low Btu fuel gas for generating power, raising plant steam, and supplying miscellaneous plant fuel gas needs. This system is described in Section 3 under "Steam and Power Generation."

(2) Slurry Preparation

Dried coal is transferred to the slurry preparation section where it is mixed with recycled oil from the gasification system. Plunger pumps boost the coal/oil slurry to a pressure of 84 to 105 kg/cm^2 (1200 to 1500 psia) to enable injection of the slurry into the high pressure gasification system. Hot effluent gases from the hydrogasifier fluidize a bed in the reactor where the oil is vaporized. These hot gases supply the needed heat to vaporize the slurry oil and dry the coal. The slurry dryer operates at about 316 degrees C (600 degrees F).

(3) Gasification

The dried coal flows into the first of two hydrogasification stages within the reactor. At 650 degrees C (1200 degrees F), the coal particles react rapidly with the hydrogen-rich gas supplied from the high-temperature gasification stage below (stage 2). Large amounts of methane are formed by direct hydrogenation of the more reactive components of the coal.

The method (now under development) of heating the coal and contacting it with the reacting gases destroys its caking properties. This destruction of the agglomerating properties within the gasifier reactor itself allows use of any feed coals without requiring separate coal pretreatment. Coal from the first Hygras reactor stage passes to the second stage, the high-temperature gasification stage.

The high-temperature reactor operates at 954 degrees C (1750 degrees F). Because the reactivity of the remaining coal char is reduced, residence time required in this fluidized bed is approximately 40 minutes. Heat required for gasification in this stage is supplied by hot gases rising from the steam-oxygen gasification reactor beneath and by exothermic heat of the direct methanation reaction.

Char residue from the high-temperature reactor is transferred directly to a steam-oxygen fluidized-bed gasification reactor. Hydrogen is formed by the reaction of steam with carbon to form hydrogen and carbon monoxide. The heat requirement for this endothermic reaction is supplied by injection of oxygen which combusts part of the char. The method of injecting the oxygen is designed to minimize burning of the hydrogen and carbon monoxide product gas and reduce the carbon content of the ash to approximately 10 percent by weight. The sulfur content of this ash is minimal. The high ash content material is selectively removed from the steam-oxygen reactor, slurried with water, and depressurized.

The ash-water slurry is transferred to settling ponds from which clarified water is recovered and returned to the ash slurrying system. Approximately 60 percent of the methane contained in the pipeline gas product is formed within the hydrogasifier.

(4) Oil Quench

As the first step in purifying the gasifier crude gas, it is quenched by a cool recirculated oil stream to approximately 204 degrees C (400 degrees F). The final temperature of quench is selected to avoid condensation of moisture. Most of the oil is condensed, recovered, and returned to the slurry preparation

section for slurrying additional coal feed. Some heavy oil make-up (from downstream units) is supplied to the oil quench section. By avoiding condensation of water in the oil quench, emulsification problems are avoided, cooling and reheating loads are decreased, and the steam load to the following shift reaction is minimized.

(5) Shift Reaction

The next step in gas purification is to adjust the hydrogen/carbon monoxide ratio to about 3.1 in a shift converter. To attain this ratio, about one-third of the feed gas bypasses this reaction. The gas to be shifted mixes with steam at about 371 degrees C (700 degrees F). The mixture next passes into two stages of fixed bed catalysts. A cobalt-molybdenum shift catalyst is used here because it is tolerant of sulfur and oils in the feed gas, it is rugged enough to withstand the high system pressure, and it can withstand plant upsets during which hot catalyst might be inadvertantly contacted with water.

The shifted gas is cooled and water scrubbed at 52 degrees C (125 degrees F) to remove most of its moisture content and essentially all of the ammonia, phenols, and cyanide. Light oils and BTX (benzene, toluene and Xylene) condensed with the water, are separated and recovered.

(6) Acid-Gas Treatment

Cooled scrubbed gas enters a Rectisol solvent based acid gas treating system. This system first removes the remaining BTX, oils and water contained in the feed gas. Then, nearly all of the acid-gas components are removed. The analysis using Illinois No. 6 coal shows that CO_2 is reduced from 30.85 percent in the feed to 0.14 percent in the effluent. H_2S is reduced from 1.44 percent to about 0.1 ppm. Even greater cleanup is achievable when Montana coal is used.

Effluent gas from acid-gas treatment enters a fixed bed sulfur guard chamber. This unit removes final traces of sulfur from the gas before methanation. Because this gas contains only a small amount of sulfur, the sulfur guard reagent remains effective for long periods without requiring regeneration or replacement.

(7) Methanation

Clean gas, now containing less than 0.1 ppm sulfur, flows into the methanation system. The methanation feed gas contains 18 to 19 percent carbon monoxide which, when methanated, releases large amounts of heat. The reaction of carbon monoxide and hydrogen takes place in fixed bed reactors using a conventional nickel-based methanation catalyst. This catalyst is effective in the temperature range from 288 degrees C (550 degrees F) to a maximum of 482 degrees C (900 degrees F); higher bed temperatures cause catalyst deactivation. The exothermic reaction heat is controlled by use of cold, recycled product gas. The exothermic heat generates steam for use in the process.

(8) Dehydration

Following methanation, the gas is cooled, moisture is condensed and the gas is dried in a conventional glycol drying unit. After drying, the product gas has a heating value of approximately 8587 kcal/m^3 (965 Btu/ft^3) and is at pipeline pressure of 70.3 kg/cm^2 (1000 psig).

(9) Water Supply and Waste Heat Recovery

Makeup water at the rate of 26,500 l/min (7000 gal/min) is brought into the plant from wells, surface streams, or reservoirs. Conventional water treating techniques are used to make high purity boiler feedwater, auxiliary water, cooling tower makeup water, and water for other plant needs.

Conventional induced draft cooling towers handle most of the heat rejected by the process. Cooling towers receive treated makeup water and cleaned treated wastewater from the plant; 17,400 l/min (4600 gal/min) of water is evaporated in the cooling towers, indicating extensive use of air cooling.

(10) Oxygen Supply

A conventional low-pressure air fractionation plant produces 98 percent purity oxygen for use in the steam-oxygen gasification system. In the case of Illinois No. 6 coal feed, 2943 m tons/day (3244 short tons/day) of oxygen is needed; for Montana subbituminous coal, 3292 m tons/day (3629 short tons/day) is required. The oxygen plant prime movers are driven by steam or gas turbines fueled by the U-Gas system.

(11) Energy Balance

The overall energy balance for the process is presented in Figures VII-1 and VII-2. Table VII-4 summarizes the energy balances for the two feedstocks selected for analysis.

(12) Sulfur Balance

The sulfur balance for both the 0.51 percent* sulfur Montana subbituminous coal and the 3.93 percent* sulfur Illinois No. 6 coal are quantified in Table VII-5 and discussed in Section 3 of this process summary.

For the case of Montana feed, the reported sulfur output of 318.6 lb-moles/hour (40.2 gm-moles/sec) is the total amount evolved from all sources. This total is composed of: 307 lb-moles/hour (38.7 gm-moles/second) of sulfur, 96.4 percent recovery, either recovered as elemental sulfur or contained in the saleable by-product oil (further removal of the sulfur in this oil, if desired, is assumed to be performed by the purchaser); 8.3 lb-moles/hour (1.0 gm-moles/sec) as SO_2 and COS which is released to the atmosphere in the U-Gas Reactor stack gas, the Rectisol acid-gas cleanup process and the Wellman-Lord tail gas cleanup process; 3.1 lb-moles/hour (0.4 gm-moles/sec) of sulfur contained in the ash which ultimately goes to minefill, and 0.2 lb-moles/hour (0.03 gm-moles/sec) of sulfur which is contained in the wastewater.

* When calculated on a moisture- and ash-free (MAF) basis, the sulfur contents for the Montana and Illinois coals are 0.71 and 4.75 percent, respectively.

Table VII-4
Energy Balance

Carrier	Montana Subbituminous Coal		Illinois No. 6 Coal	
	x 10^6 kcal/hr	x 10^6 Btu/hr	x 10^6 kcal/hr	x 10^6 Btu/hr
Input				
Coal to process	3,353	13,307	3,360	13,332
Coal to U-Gas reactor	1,030	4,087	975	3,869
Total energy input	4,383	17,393	4,335	17,201
Output				
Product gas	2,636	10,461	2,620	10,396
Crude phenol	5	20	5	20
Ammonia	9	34	27	108
Sulfur	10	39	56	224
Product oil	287	1,138	162	643
Cooling water evaporation	609	2,415	603	2,392
Other losses*	827	3,286	862	3,418
Total energy output	4,383	17,393	4,335	17,201

*Includes sensible heat of product, by-product, and waste streams, as well as air cooling and other unaccounted losses.

Table VII-5
Sulfur Balance
(gm-moles/sec)

Carrier	Montana Subbituminous Coal	Illinois No. 6 Coal
Coal	40.2	225.5
Total input	40.2	225.5
By-products		
Sulfur	38.2	221.2
In product oil-BTX	0.5	0.3
By-product total	38.7	221.5
Plant effluents		
U-Gas stack gas to atmosphere	0.8	0.7 (0.1 lb $SO_2/10^6$ Btu)
Wellman-Lord stack gas to atmosphere	<0.1	0.2 (250 ppm)
Acid gas-regenerator CO_2 vent to atmosphere*	0.2 (0.16 gm-mol/sec as COS)	1.0 (0.97 gm-mol/sec as COS)
In ash	0.4	2.1
In wastewater	<0.1	<0.1
Total output	40.2	225.5

*IGT has conceived of a process to reduce these COS emissions by about 90%. This process is not presented in this synopsis as patent protection has not yet been granted.

For the 1788 lb-moles/hour (225.5 gm-moles/sec) of sulfur contained in the Illinois coal, though the recovery is greater (98.2 percent), the actual quantity of emissions is increased. This is primarily due to greater sulfur in the ash from this feed, and an increase in the release of COS from the acid-gas cleanup system.

3. DISCUSSION OF POLLUTION CONTROL PROCESSES

The nature and treatment of the major waste streams generated in the Hygas process are discussed in this section. Treatment methods for controlling and recovering sulfur are also addressed. Waste streams, their sources and treatment, are summarized in Table VII-6.

Table VII-6
Source and Treatment of Major Waste Streams

Final Waste	Source	Treatment*
Coal fines	Coal crushing, drying, and transporting	Cyclone separators and bag filters. Recycled to process
Ash	Steam-oxygen gasifier: U-Gas reactor	Settling ponds and mine disposal
Wastewater	Water scrubber	Flash dryers, Phenosolvan process, strippers, Phosam process, two stage biological treatment
Hydrogen sulfide, sulfur dioxide	Rectisol acid-gas treatment, U-Gas cleaning, ammonia recovery	Claus plant, incineration, Wellman-Lord process
CO_2 - rich gas	Rectisol acid gas solvent regeneration	None required
Nitrogen	Oxygen plant	None required

*For a more detailed explanation of the specific treatment processes discussed in this report, refer to available published literature and to the reference section at the end of this report.

(1) Steam and Power Generation

For this process analysis, the method of motive and electrical power generation and the raising of steam is considered as one of the pollution control systems which limit the sulfur released to the atmosphere. Twenty percent of the total coal feed is gasified in the IGT U-Gas process where it is cleaned of sulfur for use as a fuel to generate power, raise steam, and other plant needs. The use of the U-Gas system significantly reduces the sulfur content in the combustion gases.

The U-Gas reactor is a simple single stage, fluidized gasifier utilizing steam and air to react with coal. The reactor receives dried and sized coal from the coal preparation section. This system operates at only 22.1 kg/cm^2 (300 psig). This pressure level enables the use of lock hoppers to feed reactor solids. Gasification takes place at about 1038 degrees C (1900 degrees F). Higher localized temperatures are reached in the fluidized bed by a submerged jet of steam and oxygen. Ash from the U-Gas reactor is nearly depleted of carbon by the high temperature gasification. The sulfur content is also negligible. Ash is slurried with water, depressurized and sent to ash disposal.

The high temperatures of the U-Gas reactor and method of coal injection avoid tar and heavy oil production in the raw effluent gases. The hot gases are cooled, thereby generating steam, and then enter a proprietary hot gas treatment system (the IGT Meissner process - included as part of U-Gas system) which eliminates particulates and removes most of the sulfur from the gas. This sulfur is regenerated as SO_2 and is directed to the Claus plant.

Part of the cleaned low-Btu gas generates 40 megawatts of electrical power by combustion and expansion through a gas turbine. Turbine exhaust gases raise steam in a waste heat boiler, thereby generating additional power. This power is used to satisfy in-plant needs. The gas turbines can supply direct shaft horsepower to the oxygen plant. The remaining low-Btu gas enters the plant fuel gas system. Most of this gas is burned in the steam boiler plant which raises 170 kg/cm^2 (2400 psig), 538 degrees C (1000 degrees F) steam, for use in the gasification reactor and carbon monoxide shift section. Some of the cleaned U-Gas product is burned in the coal preparation section to provide heat for drying the coal feed.

Ash from the U-Gas reactor is slurried with water, depressurized, and sent to ash settling ponds. Clarified water is withdrawn from the ponds and recycled for additional ash slurrying. When the ash ponds are filled, new ponds are put into service and the filled ponds are drained and allowed to dry. The settled ash is removed from the dried ponds and transferred to mined out areas for final disposal.

(2) Sulfur Recovery

Rich solvent from the Rectisol acid-gas absorber enters the regeneration section where some light oil and BTX is recovered. The regeneration section effectively separates dissolved H_2S from CO_2. The CO_2-rich gas, vented to the stack as stream 13, contains less than 0.001 percent H_2S and 0.03 percent COS. The effluent from the lower sulfur Montana coal contains only 0.004 percent COS. About 1.6 percent methane and ethane are also present in the CO_2 vent gas. This stream is vented without further treatment. The H_2S-rich stream, stream 14, contains H_2S in a concentration of 29.8 percent which is excellent for Claus plant feed.

Part of the H_2S is oxidized in the Claus plant boiler and is combined with the remaining H_2S stream and the SO_2 stream produced from the U-Gas acid-gas removal system. The combined H_2S-SO_2 stream reacts over bauxite catalyst at near atmospheric pressure, to form elemental sulfur vapor. Two reactor stages are used. The sulfur is condensed and sent to storage as a liquid. When Illinois coal is the feedstock, 602 long tons/day (675 short tons/day) are produced; from Montana coal 104 long tons/day (117 short tons/day) are produced.

Tail gas from the Claus plant plus flash gases from foul water are combined and incinerated. The sulfur components oxidize to form SO_2. The gases are then scrubbed with an aqueous solution of sodium sulfite (the Wellman-Lord process discussed further in Chapter III) to remove SO_2. Scrubbed gas will contain less than 250 ppm of sulfur as SO_2. The SO_2 recovered from the sodium sulfite solution is recycled to the Claus plant for additional sulfur recovery.

Of the sulfur entering the plant with the Illinois coal, about 98 percent is recovered in elemental form from the Claus plant, 1 percent is rejected in the ash, and about 1 percent appears as stack gas effluent which is released to the atmosphere from the steam boiler stack or the CO_2-rich gas vent.

Most of the sulfur is separated in the acid-gas treating section of the Hygas plant or in the U-Gas cleaning system. Smaller amounts are recovered from the foul water, and oil streams. The 1 percent of the incoming sulfur discharged with the ash is fixed into the lattice of the ash's remaining carbon. With the Montana coal feed, due to the lower initial sulfur content, sulfur recovery is 95 percent and yet the concentration of sulfur in the effluent streams is lower than with Illinois coal.

(3) By-Product Recovery

Some low-boiling oils and aromatics, such as benzene, toluene, and xylene (BTX) are carried in the gas through the oil quench section and are recovered in the water scrub and acid-gas treatment sections of the plant (streams 11 and 12). The oil is separated from water and sent to light oil storage. Heavier oils are returned to the oil quench section to supplement the recycle oil, and the lower boiling fraction is produced as by-product oil. A BTX and oil production rate of 484,480 1/day (128,000 gal/day) is predicted for the Illinois No. 6 coal, and 862,980 1/day (228,000 gal/day) for the Montana subbituminous coal.

Water from the water scrubbing section contains a variety of water soluble pollutants. These include phenol, dissolved CO_2 and H_2S, and some hydrogen cyanide*. The foul water is depressurized and degassed. Light oils are separated and the foul water enters the phenol recovery section. Phenol is removed by the Lurgi Phenosolvan process, a liquid-liquid extraction process discussed further in Chapter III of this report. Crude phenol is produced at approximately 15,897 1/day (4200 gal/day). Water from the Phenosolvan process is stripped of ammonia and H_2S. This hot wet gas stream is passed into a U.S. Steel Phosam process.

* Most of the HCN manufactured in the gasifier is hydrogenated to ammonia in the water-gas shift reactor.

In the Phosam process, ammonia is selectively extracted from the gas by scrubbing with an aqueous ammonium phosphate solution. Anhydrous ammonia is produced at 122 m tons/day (134 short tons/day) from Illinois coal and 38 m tons/day (42 short tons/day) from Montana coal. After stripping, the wastewater is expected to contain 5 ppm ammonia, 12 ppm hydrogen cyanide, 10 ppm H_2S, and 20 ppm of phenol and is of satisfactory purity for direct introduction into the plant cooling water circuit (stream 16). The stripped gases flow to the Claus plant effluent incinerator where cyanides and sulfides are oxidized.

(4) Control of Solid Wastes

Coal dust is generated during the coal breaking and crushing operations. This dust is collected in two-stage cyclones with bag filters to minimize solids lost to the atmosphere. These fines are recycled to the system as feed material.

As previously described, the coal ash obtained from the U-Gas and the Hygas gasification reactors is sent to sealed ash settling pounds as a slurry in water. When the ponds are filled, the water is drained, and the ponds are dried before transferring the ash to worked-out mining areas. Water is recycled or evaporated.

The sulfur guard chamber may contain metal-promoted active carbon, or spent methanation catalyst which has been rejuvenated for final sulfur removal. Only a tiny amount of sulfur must be removed from the gas at this point, about 2.3 kg/day (5 lb/day) as H_2S. Periodically, these catalysts will be regenerated with steam and air. On regeneration of the active carbon, the adsorbed sulfur compounds are converted to elemental sulfur which is readsorbed. Regeneration of the spent methanation catalyst evolves SO_2 which is directed to the Wellman-Lord system. Eventually, these solids must be removed from the system and they should be oxidized before discarding into the worked-out mining areas.

The methanation catalyst will require replacement occasionally as the result of aging or deactivation due to misoperation. This catalyst will probably be returned to the manufacturer for recovery of nickel and disposal of possible sulfur.

(5) Liquid Waste Streams

The stockpiled coal will cover a substantial area in the plant. As a result of oxidation and rainfall, some organics and sulfates will be leached from the pile and runoff water will carry small amounts of coal fines. This water can be segregated and the solids removed before biological treatment.

The main process water stream in this plant is the foul water exiting from the ammonia recovery section of the plant. This stream will be purified, as discussed earlier, and then will feed the cooling water circuit. The cooling tower blowdowns will be combined with other sanitary and process effluents for conventional secondary treatment.

A maximum amount of treated wastewater will be recycled to the process through careful plant design, utilizing low-temperature heat sources within the plant, and innovative high pressure steam boiler designs. Total recycle of this treated wastewater may eventually be possible. Cooling tower and boiler blowdown are combined with sanitary sewage and runoff water for conventional water treating.

(6) Gaseous Waste Streams

The main gaseous waste streams vented to the atmosphere are discharged from:

- Coal preparation dryer vent
- Steam boiler stack
- Oxygen plant (nitrogen)
- Acid-gas treatment facility (CO_2)
- Cooling tower (evaporated water)
- Wellman-Lord treatment system (SO_2).

The solids content in these gases is expected to be minimal. The stack gases from the steam boiler will contain 0.2 kg/10^6 kcal (0.1 lb SO_2/million Btu) of fuel burned, significantly below the present Federal EPA "New Source Performance Standard" for coal fired facilities. The incorporation of the U-Gas system into the coal-combustion scheme results in a significant reduction in pollutants. The Wellman-Lord process stack gas will contain about 250 ppm sulfur as SO_2. No potential pollution problems are foreseen for the nitrogen rejected from the oxygen plant. Water vapor from the cooling tower will normally be clean steam. This could become troublesome only if leaks occur in the process heat exchangers. Total combustible gases in the acid-gas CO_2 vent equal about 2 percent by volume. This hydrocarbon loss is a characteristic of the proved acid-gas removal process employed in this preliminary design of the process. The sulfur content of this stream may be as high as 300 ppmv, primarily as COS, with the high sulfur Illinois coal. This sulfur loss is based on expectations of the effectiveness of the acid-gas process. At the cost of about 3 to 5 percent of the heating value of the product gas, this CO_2-rich gas stream could be incinerated before venting which would convert the small COS content to SO_2 and eliminate the hydrogen, methane, and ethane content. In view of the present energy shortage, this incineration cost may be too high.

4. COSTS OF POLLUTION CONTROL*

Costs required for control and treatment of pollutants evolved during coal gasification by the Hygas process are calculated in this section. Since this process to produce pipeline gas is not yet in commercial use, derived cost figures are estimates of costs for similar pollution control unit processes. The major assumptions and conventions adopted here are discussed in Chapter III. All by-product flow rate data presented in Figures VII-1 and VII-2 also apply.

---

* The costs presented here are preliminary estimates; the actual costs of emission control in this process will not be known until a full-scale facility has been constructed and operated.

The incremental* capital investment for control of potential pollutants and waste streams is presented in Tables VII-7 and VII-8 for each of two feedstocks (a low and high sulfur content coal). The investments considered are based on the control methods selected and described in Sections 2 and 3. The incremental annual operating costs for these emission control systems are presented in Tables VII-9 and VII-10.

The incremental capital investment for pollution control of the low sulfur Montana subbituminous coal using utility financing is $57.9 million; using the discounted cash flow (DCF) method, it is $61.3 million. For the high sulfur Illinois No. 6 coal, the costs are $67.2 million and $71.7 million, respectively. The annual operating costs, after taking credit for sulfur production at $10/long ton and ammonia production at $25/short ton, is about $4.8 million per year for the Montana feed and $3 million per year for the Illinois coal. The derivation of the formulae for calculating the incremental cost of gas production due to pollution control is presented in Chapter III. For the DCF method, the required incremental annual cost of gas, X, for the assumed rate of return is:

$$X = N + 023816I + 0.1275S + 0.230777W$$

where:

N = incremental net operating cost
I = incremental plant investment
S = startup costs
W = incremental working capital.

For the utility financing case, it is:

$$X = N + 0.1198C + 0.0198W$$

where:

C = incremental capital investment
N and W = same as defined above.

---

* Incremental costs in this report refer to that portion of the total plant cost that is assignable to pollution control facilities.

Table VII-7
Hygas Plant With Montana Subbituminous
Coal Feed, Incremental Capital Costs

Capital Requirements for Pollution Control[a]	10^6 $	
U-Gas system	25.4	
Dust control	2.2	
Sulfur recovery unit	0.9	
Sulfur recovery tail gas unit	2.3	
Wastewater treatment	10.8	
Subtotal plant investment	41.6	
Contingency at 15%	6.2	
Incremental plant investment (I)[b]	47.8	47.8
Startup costs (S)[c]	1.1	1.1
	Utility	DCF
Interest during construction[d]	8.1	11.3
Incremental working capital[e]	0.9	1.1
Incremental capital investment (C)	57.9	61.3

Notes

a Incremental plant investment, return on investment during construction, and working capital are treated as capital costs in year 0 (the year ending with completion of startup operation).

b Installed costs, including engineering design costs, contractors' profit, and overhead, and the contingency includes costs for unexpected site preparation and hardware requirements at 15% of plant investment.

c. At 20% of incremental gross operating cost.

d. For the DCF method, computed as the discount rate x incremental plant investment for 1.875 years' average construction period. $I(1+i)^n = I(1.12)^{1.875} = 1.23676\ I$ or $0.23676\ I$ additional investment.

For the utility financing method, computed as the interest rate on debt x incremental plant investment x 1.875 yrs.

e. Sum of materials and supplies at .9% of incremental plant investment and net receivables at 1/24 of annual incremental revenue.

Table VII-8

Hygas—Illinois No. 6 Coal, Incremental Capital Costs

Capital Requirements for Pollution Control[a]	10^6 $	
U-gas system	25.4	
Dust control	2.2	
Sulfur recovery unit	4.1	
Tail gas recovery unit	5.8	
Wastewater treatment	10.8	
Subtotal plant investment	48.3	
Contingency	7.2	
Incremental plant investment(I)[b]	55.5	55.5
Startup costs (S)[c]	1.3	1.3
	Utility	DCF
Interest during construction (IDC)[d]	9.4	13.1
Incremental working capital (W)[e]	1.0	1.2
Incremental capital investment (C)	67.2	71.1

Notes:

a. Incremental plant investment, return on investment during construction, and working capital are treated as capital costs in year 0 (the year ending with completion of startup operation).

b. Installed costs, including engineering design costs, contractors' profit, and overhead, and the contingency includes costs for unexpected site preparation and hardware requirements at 15% of plant investment.

c. At 20% of incremental gross operating cost.

d. For the DCF method, computed as the discount rate x incremental plant investment for 1.875 years' average construction period.
$I(1+i)^n = I(1.12)^{1.875} = 1.236761I$ or $0.236761I$ additional investment.

For the utility financing method, computed as the interest rate on debt x incremental plant investment x 1.875 yrs.

e. Sum of materials and supplied at .9% of incremental plant investment and net receivables at 1/24 of annual incremental revenue.

Table VII-9
Hygas—Montana Subbituminous Coal,
Incremental Annual Operating Costs

Labor	Dollars	
Direct operating labor (3 men/shift x $5/hr x 8.304 shift hr/man-yr)	124,600	
Maintenance labor (1.5% of I)	717,000	
Supervision (15% of direct operating and maintenance labor	126,200	
Incremental labor cost	967,800	967,800
Administration and general overhead (60% of incremental labor)		580,700
Other direct costs		2,088,700
Supplies		
Operating (30% of Direct Operating Labor)	37,400	
Maintenance (1.5% of I)	717,000	
Incremental cost of supplies	754,400	754,400
Local taxes and insurance (2.7% of I)		1,290,600
Incremental gross operating cost		5,682,200
By-product credits		
Sulfur (104 long tons/day x 365 days/year) x 0.9 capacity factor x $10/long ton)	341,600	
Ammonia (42 short tons/day x 365 days/year x 0.9 capacity factor x $25/short ton)	344,900	
Crude phenol		
4200 gal/day x 7.5 lb/gal x 365 day/year x 0.9 capacity factor x $.02/lb	207,000	
Total by-product credit	893,500	(893,500)
Incremental net operating cost (N)		4,788,700

Table VII-10
Hygas—Illinois No. 6 Coal,
Incremental Annual Operating Costs

Labor	Dollars	
Direct operating labor (3 men/shift x $5/hr x 8,304 shift hr/man-yr)	124,600	
Maintenance labor (1.5% of I)	832,500	
Supervision (15% of direct operating and maintenance labor)	143,600	
Incremental labor cost	1,100,700	1,100,700
Administration and general overhead (60% of incremental labor)		660,400
Other direct costs		2,197,600
Supplies		
Operating (30% of direct operating labor)	37,400	
Maintenance (1.5% of I)	832,500	
Incremental cost of supplies	869,900	869,900
Local taxes and insurance (2.7% of I)		1,498,500
Incremental gross operating cost		6,327,100
By-product credits		
Sulfur (602 long tons/day x 365 days/year x 0.9 capacity factor x $10/long ton)	1,977,600	
Ammonia (134 short tons/day x 365 days/year x 0.9 capacity factor x $25/short ton)	1,100,500	
Crude phenol (4100 gal/day x 7.5 lbs/gal x 365 days/year x 0.9 capacity factor x $0.02/lb)	202,000	
Total by-product credit	- 3,280,100	- 3,280,100
Incremental net operating cost (N)		3,047,000

For Montana subbituminous coal, annual gas production, G, is estimated to be:

$$(260 \times 10^6 \text{ ft}^3/\text{day})\ (966 \text{ Btu/ft}^3)\ (0.9 \text{ capacity factor})\ (365 \text{ days/yr}) = 82.506 \times 10^{12} \text{ Btu/yr}\ (20.792 \times 10^{12} \text{kcal/yr})$$

For the Illinois No. 6 feed, annual gas production is:

$$(963 \text{ Btu/ft}^3)\ (259 \times 10^6 \text{ ft}^3/\text{day})\ (.9 \text{ capacity factor})\ (365 \text{ days/yr}) = 81.933 \times 10^{12} \text{ Btu/yr}\ (20,647 \times 10^{12} \text{kcal/yr}).$$

This is regarded as a typical annual production rate for a commercial Hygas plant. Therefore, the incremental cost of gas, due to pollution control is:

$$\frac{\text{Annual Cost of Gas}}{\text{Annual Gas Production}} = \frac{X}{G}$$

Solutions to the above equations for the incremental cost of gas are shown in Table VII-11. When using the DCF method, the incremental cost of product gas, as a result of the investment and operating expenses for waste system control, is 20¢/million Btu of gas produced. Using the utility accounting method, it is 14¢/million Btu.

As shown in Table VII-11, the sulfur content of the feeds analyzed in this synopsis did not seem to significantly alter the cost of pollution controls. Although the processing of the high sulfur Illinois coal required additional capital expenditures for sulfur recovery and tail gas treatment facilities, they were offset by higher credits taken for the increased sulfur and ammonia recovered for sale.

5. REFERENCES

Private Communications, Fleming, D. K., Manager, Pollution Control, "Processes," Institute of Gas Technology, August-December 1973.

Table VII-11
Incremental Cost of Gas Due to
Pollution Control for the Hygas Process

Accounting Method	0.51% Sulfur Content Montana Subbituminus Coal	
	Incremental Annual Cost of Gas, $/Yr.	Incremental Cost of Gas, $/10^6 Btu
DCF	16,567,000	0.201
Utility financing	11,742,900	0.142

Accounting Method	3.93% Sulfur Content Illinois No. 6 Coal	
	Incremental Annual Cost of Gas, $/Yr.	Incremental Cost of Gas, $/10^6 Btu
DCF	16,707,700	0.204
Utility financing	11,117,400	0.136

VIII. THE COED PROCESS

The Char-Oil-Energy-Development process (COED) was designed to produce synthetic crude oil (syncrude) by pyrolysis of the volatile components in bituminous coal. The by-products are a fuel gas that can be purified for direct use, reformed to produce hydrogen, or upgraded to pipeline gas; and a char that in some cases can be used directly as a boiler fuel, or can be converted to a fuel gas.

Coal is crushed, dried, and heated to progressively higher temperatures in a series of four fluidized bed reactors. The raw oil evolved is purified and hydrotreated (treated with hydrogen) to remove sulfur, nitrogen, and oxygen yielding a high grade synthetic crude oil. An advantage of the COED process lies in its ability to process agglomerating (caking) coals without prior oxidation that tends to reduce the yield of useful products.

The COED process has been under development since 1962 by the FMC Corporation of Princeton, New Jersey, under the sponsorship of the Office of Coal Research, U.S. Department of the Interior. Following several years of development, and operation of a 45 kg/hr (100 lb/hr) Process Development Unit (PDU), the Blaw Knox Corporation of Pittsburgh designed and constructed a pilot plant in Princeton, New Jersey. The capacity of the pyrolysis section of this pilot plant is 33 metric tons (36 short tons) of coal per day; the hydrotreating unit can process 30 barrels of oil daily. The successful operation of the plant was demonstrated by a 30-day run in December 1970.

1. GENERAL DISCUSSION

All process flow data, flow rates, and stream compositions presented in this analysis of the COED process are based on the source material referenced at the end of this summary and private communications with the process developers.* The analysis of the COED

* COED developers have suggested changes to the process as reported here. Their comments are appended and referenced where applicable.

process is presented here for two feedstocks (Utah A Seam and Illinois No. 6 coals) and two alternative methods of generating hydrogen (steam reforming of pyrolysis off-gas and char partial oxidation). The ultimate analysis of the specific feedstocks selected is reported in Figures VIII-1 and VIII-2, along with other pertinent details. The unit processes contained within the dashed lines were not defined by the process developer but were assumed for this analysis. The sulfur and moisture contents, feed rates, and the respective yields are given in Table VIII-1.

Table VIII-1
COED Feedstocks and Products*

Carrier	Utah A Seam		Illinois No. 6
Hydrogen generation	**Gas reforming**	**Char oxidation**	**Gas reforming**
Feedstock			
Sulfur content (dry %)	0.5	0.5	3.7
Moisture (%)	6.0	6.0	11.0
Feedrate (short tons/hr)	443.7	443.7	462.5
(m tons/hr)	402.5	402.5	419.6
Product			
Char (short tons/hr)	206.2	108.3	230.2
(m tons/hr)	187.1	98.2	208.8
Oil (bbl/hr)	591.7	591.7	377.9
(l/hr)	94,063	94,063	60,075
Gas (X 10^3 ft^3/hr)	820.8	4,133.3	562.5
(m^3/hr)	23,245	117,055	15,930

*Other by-products include sulfur and ammonia. (See reference 5.)

2. PROCESS DESCRIPTION

The flow diagram and tabulations of associated material and energy balances for the COED coal liquefaction process are presented in Figures VIII-1 and VIII-2 for the case of steam-reforming to make process hydrogen. The objective and operation of each step, including emission generation, are described below under the following headings:

FIGURE VIII-1
The COED Process—Utah A Seam Coal

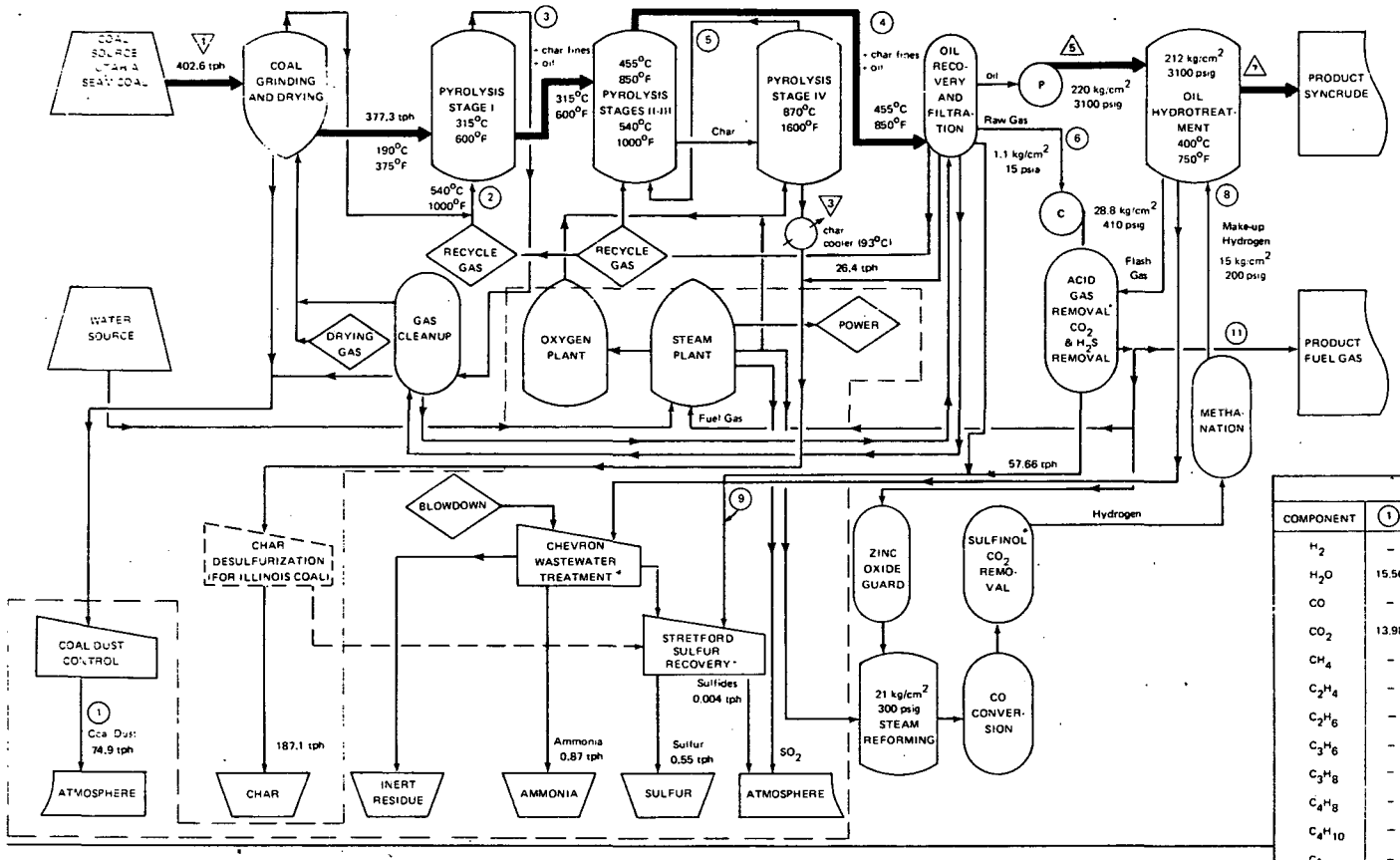

COMPOSITION OF SOLID AND LIQUID STREAMS (WT. %)				
FEEDSTOCK	UTAH A SEAM			
COMPONENT	COAL (1)	CHAR (3)	RAW OIL (5)	SYNCR (7)
C	74.8	85.2	83.3	85.8
H	5.5	1.1	8.7	11.8
O	11.7	1.0	6.5	2.0
N	1.4	1.4	1.0	0.32
S	0.5	0.7	0.3	0.02
ASH	6.1	10.6	0.2	–
TOTAL	100.0	100.0	100.0	–
MOISTURE	6.0	–	–	–
FLOW RATE short tons/hr (m ton/hr)	443.70 (402.6)	206.22 (187.1)	97.35 (88.3)	94.14 (85.4)

COMPOSITION OF GASEOUS STREAMS (VOL. %)									
COMPONENT	(1)	(2)	(3)	(4)	(5)	(6)	(8)	(9)	(11)
H_2	–	–	–	37.58	48.96	41.93	95.15	1.30	49.30
H_2O	15.50	16.29	18.18	13.08	2.08	2.99	–	6.01	–
CO	–	–	–	17.36	29.37	19.36	–	0.77	22.67
CO_2	13.98	13.85	13.56	12.94	14.69	14.44	–	89.32	TRACE
CH_4	–	–	–	14.14	4.90	15.78	4.85	0.34	21.06
C_2H_4	–	–	–	0.35		0.38	–	–	0.45
C_2H_6	–	–	–	2.00	–	2.23	–	0.29	2.71
C_3H_6	–	–	–	1.31	–	1.46	–	–	1.72
C_3H_8	–	–	–	0.70	–	0.78	–	0.10	1.13
C_4H_8	–	–	–	0.26	–	0.29	–	–	0.34
C_4H_{10}	–	–	–	0.17	–	0.19	–	–	0.40
C_5^+	–	–	–	–	–	–	–	–	0.22
O_2	–	–	–	–	–	–	–	–	–
N_2	70.52	69.86	68.24	–	–	–	–	–	–
NH_3	–	–	–	–	–	–	–	–	–
H_2S	–	–	–	0.15	–	0.17	–	1.88	–
FLOW RATE									
10^3 m^3/hr	62	150	222	210	130	139	55	23	23
10^3 ft^3/hr	2,200	5,300	7,800	7,400	4,600	4,900	1,930	800	820

Note: Values for Flow Rates and or Compositions refer to Utah A Seam Coal.
tph = M tons/hour
*Specific treatment and recovery processes were defined by the process developer.

FIGURE VIII-2
The COED Process—Illinois
No. 6 Coal

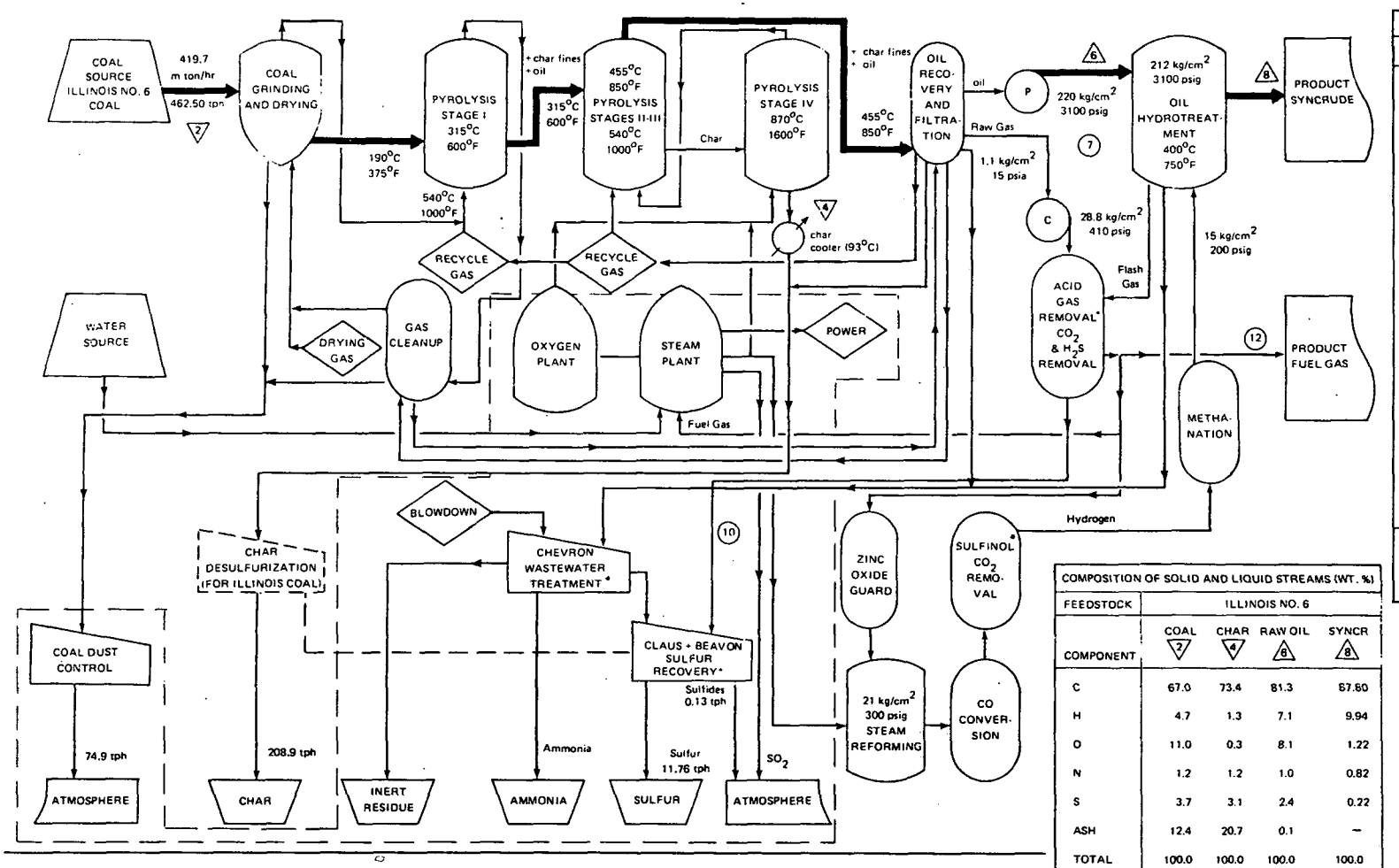

COMPOSITION OF GASEOUS STREAMS (VOL. %)			
COMPONENT	7	10	12
H_2	38.5	1.3	46.3
H_2O	–	–	–
CO	18.4	0.7	22.1
CO_2	13.0	75.3	TRACE
CH_4	12.3	0.4	14.8
C_2H_4	0.6	–	0.7
C_2H_6	10.1	0.3	12.2
C_3H_6	1.6	–	1.9
C_3H_8	0.2	–	0.2
C_4H_8	–	–	–
C_4H_{10}	1.5	–	1.8
C_5^+	–	–	–
O_2	–	–	–
N_2	–	–	–
NH_3	–	–	–
H_2S	3.8	22.0	TRACE
FLOW RATE			
10^3 m^3/hr	98	17	16
10^3 ft^3/hr	3450	595	562

COMPOSITION OF SOLID AND LIQUID STREAMS (WT. %)				
FEEDSTOCK	ILLINOIS NO. 6			
COMPONENT	COAL 2	CHAR 4	RAW OIL 8	SYNCR 8
C	67.0	73.4	81.3	87.60
H	4.7	1.3	7.1	9.94
O	11.0	0.3	8.1	1.22
N	1.2	1.2	1.0	0.82
S	3.7	3.1	2.4	0.22
ASH	12.4	20.7	0.1	–
TOTAL	100.0	100.0	100.0	100.0
MOISTURE	11.0	–	–	–
short tons/hr (m ton/hr)	462.50 (419.7)	230.20 (208.9)	75.60 (68.6)	65.71 (59.6)

Note: Values for Flow Rates and/or Compositions refer to Illinois No. 6 Coal.

*Specific treatment and recovery processes were defined by the process developer.

- Coal preparation
- Pyrolysis
- Oil recovery and filtration
- Oil hydrotreatment
- Gas purification
- Hydrogen generation
- Steam and power generation
- Energy balance
- Sulfur balance.

The corresponding pollution control practices and their costs are covered in subsequent sections.

(1) Coal Preparation

Coal (stream 1 and 2) is ground by hammer mills to minus 3 mm (1/8 in) size and conveyed to storage bins. From the storage bins, the coal is fed to a dryer which is heated by hot process gas (drying gas). The bulk of the coal dryer exit gases is transferred to the first pyrolysis stage and then to gas cleanup, eventually returning to the coal dryer as fluidizing gas. Dried coal at 190 degrees C (375 degrees F) is conveyed from the dryer to the first pyrolysis stage. Coal preparation generates both coal dust and gaseous emissions. These are discussed in Section 3 of the chapter.

(2) Pyrolysis

The pyrolysis operation is performed by heating coal to progressively higher temperatures in a series of four fluidized bed reactors. Pressure is maintained throughout at 1.4 to 1.7 kg/cm^2 (6 to 10 psig).

In the first stage, the coal is rapidly heated to 315 degrees C (600 degrees F) and devolatilized by fluidizing gas (stream 2) at 540 degrees C (1000 degrees F). The exit gases (stream 3), containing some char and oil proceed to gas cleanup. Here the gas is quenched with recycle water (an aqueous stream from gas quenching in the oil recovery section). The oil-water mixture is transferred from gas cleanup to the oil recovery section where the oil is separated. The purified gas from gas cleanup is recycled to the coal dryer. Another portion of this gas

is used to cool the product char from stage IV to 93 degrees C (200 degrees F) before being vented to the stacks. Char, at 315 degrees C (600 degrees F), is next conveyed to the second pyrolysis stage.

Pyrolysis stages two and three are contained in two sections of a vessel maintained at 455 degrees C (850 degrees F) and 540 degrees C (1000 degrees F), respectively. The effluent stream from the second stage (stream 4) contains the volatile matter driven from the coal in the last three stages of pyrolysis. This stream next flows to the oil recovery section.

Char from the third pyrolysis stage, at 540 degrees C (1000 degrees F), is conveyed to the fourth stage, where it is heated to 870 degrees C (1600 degrees F). The heat requirements for the last three stages of pyrolysis (stages II, III, and IV) are supplied by combustion of a portion of this char with oxygen within stage IV. Based on the analysis of stage IV off-gas, steam may also be added at this point (ref. 5). The remaining product char from this stage (stream 3 and 4) is cooled in a fluidized bed char cooler to 93 degrees C (200 degrees F) and sent to storage.

(3) Oil Recovery and Filtration

Within the oil recovery and filtration section, the volatile products from the second pyrolysis stage are first cooled from 455 degrees C (850 degrees F) to 77 degrees C (170 degrees F) in a venturi scrubber. Next, most of the oil is condensed and removed in a gas-liquid separator. The gas is then passed through an electrostatic precipitator to remove the oil mist, and finally through a spray tower to remove any remaining traces of oil. The oil separated from the oil-water mixture obtained from gas-liquid separation, the spray tower, and the first stage pyrolysis gas cleaning unit is removed in a decanter. The water is recycled to the gas-liquid separator and gas cleanup of the first stage pyrolysis. The oil is dehydrated by heating with steam coils and filtered mechanically to remove fine char particles which escape the cyclone separators associated with the pyrolysis reactors.

(4) Oil Hydrotreatment

Treatment of the raw pyrolysis oil with hydrogen is required to remove unwanted nitrogen, sulfur, and oxygen and to upgrade its specific gravity and viscosity to the level of about 25 degrees API syncrude. The raw oil (stream 5 and 6) is pressurized to 220 kg/cm^2 (3100), mixed with hydrogen gas, and treated in a fixed bed, catalytic reactor at 400 degrees C (750 degrees F) and 210 kg/cm^2 (3000 psig, ref. 5).

Excess flash gas from the hydrotreater is depressurized. It contains hydrogen, hydrogen sulfide, methane and higher hydrocarbons. This stream is passed through acid-gas removal (gas purification, below) and then split. Part of the gas becomes product fuel gas (11 and 12); the remainder passes through hydrogen manufacture (steam reforming) and is recycled to the hydrotreater (ref. 5).

An aqueous bleed stream is also withdrawn from the hydrotreatment section. This liquor stream, containing ammonia and H_2S, is combined with excess liquor from the oil recovery section and transferred to wastewater treatment.

(5) Gas Purification

The raw gas from the oil recovery section (stream 6 and 7) is compressed from 1.1 kg/cm^2 (16 psia) to 28.8 kg/cm^2 (410 psia) and mixed with the excess flash gas stream from the hydrotreatment section. The acid-gas treatment selected by FMC for these gases is a Sulfinol system consisting of a solution of sulfolane and diisopropanolamine (DIPA) in water. This treatment reduces the acid-gas content to 10 ppm CO_2 and 1 ppm H_2S. * The purified gas (stream 11 and 12) can be sold as a low Btu fuel gas, or it can be used to provide the hydrogen and power requirements of the COED process. The regenerated acid-gas (stream 9 and 10) goes to the Stretford sulfur recovery unit.

* As discussed in Chapter III, various other acid-gas treatment processes could have been employed in this application.

(6) Hydrogen Generation

Hydrogen required for the hydrotreatment section can be produced by either of two methods:

- Steam reforming of a portion of product gas
- Partial oxidation of product char.

In the former case (illustrated in Figures VIII-1 and VIII-2), the product gases (stream 11 and 12) are passed over a zinc oxide bed to remove traces of sulfur and thus avoid poisoning the reforming catalyst. Next, the hydrocarbon gases are reformed with steam at 20 kg/cm^2 (300 psia) to form carbon monoxide and hydrogen ($CH_x + H_2O \rightarrow CO + H_2$). The carbon monoxide is then shifted with steam to yield carbon dioxide and additional hydrogen ($CO + H_2O \rightarrow CO_2 + H_2$). Finally, carbon dioxide is removed by acid gas treatment similar to that used in the production of fuel gas. The unconverted carbon monoxide is methanated to prevent deactivating the hydrotreater catalyst. The resultant hydrogen stream contains approximately 95 percent hydrogen at 15 kg/cm^2 (200 psia) and 5 percent methane.

In a second method, a portion of the char is reacted with high pressure steam and oxygen to generate synthesis gas. The latter is then subjected to quenching to remove fine particles, a shift reaction to convert carbon monoxide and water to carbon dioxide and hydrogen, acid gas removal, trace sulfur removal by a zinc oxide bed, and finally, methanation. The resultant gas contains again about 95 percent hydrogen.

(7) Steam and Power Generation

It will be assumed here that steam, electric power, and oxygen requirements of the process are met by on-site plants fired by a portion of the product fuel gas as illustrated in Figure VIII-1. A more economical alternative, perhaps less environmentally acceptable, would be the combustion of the product char. Combustion of the char from the Utah A Seam coal yields a flue gas containing 2.0 kg $SO_2/10^6$ kcal (1.1 lb $SO_2/10^6$ Btu), which is below the current maximum permissible level. The product char from the Illinois No. 6 coal must be desulfurized before combustion (discussed later).

The oxygen required for the fourth pyrolysis stage is provided in this analysis by an on-site steam powered oxygen plant, which produces no harmful emissions.

(8) Energy Balance

The energy balance calculations for the process are presented in Table VIII-2. In both cases, it is assumed that process hydrogen is generated by gas reforming. The alternative of using char oxidation is calculated for the Utah feed. The energy efficiencies (coal-to-oil) for conversion of Utah and Illinois coals to syncrude are approximately 32 percent and 23 percent, respectively. The overall coal-to-products thermal efficiencies are about 84 and 79 percent, respectively, with the remaining energy lost as ambient heat.

(9) Sulfur Balance

The sulfur balances for the two feedstocks analyzed are presented in Table VIII-3. Note that a significant portion of the sulfur in the feed coal is retained in the char. For the Utah coal, 69.4 percent and 41.4 percent of the total sulfur is recovered in the char when employing gas reforming and char oxidation respectively. For the Illinois feed, 14.1 percent (ref. 5) of the sulfur remains in the char. Desulfurization of char from the high sulfur Illinois No. 6 coal (discussed later) produces additional hydrogen sulfide and yields a greater amount of sulfur by-products. As much as 84.2 percent of the sulfur is recovered for sale as compared to 29.4 percent for the Utah coal. The syncrude produced from Utah and Illinois coals contains only 0.02 and 0.22 percent sulfur (effectively 99 percent sulfur removal), respectively, and is comparable to natural low-sulfur, high-grade crude oil. For gas reforming 0.2 percent and 0.8 percent of the feed sulfur is lost to the atmosphere using the Utah and Illinois feeds, respectively. For the char oxidation mode using Utah coal, 17 percent of the original sulfur is vented to the atmosphere.

Table VIII-2
Energy Balance Calculations

Carrier	Heating Value	Utah A Seam					
		Gas Reforming			Char Partial Oxidation		
		Amount	Energy		Amount	Energy	
			(10^6 kcal/hr)	(10^6 Btu/hr)		(10^6 kcal/hr)	(10^6 Btu/hr)
Coal	7,517 kcal/kg	378,000 kg/hr	2,841.4	11,275	378,000 kg/hr	2,841.4	11,275
Total energy input			2,841.4	11,275		2,841.4	11,275
Syncrude	10,584 kcal/kg	85,405 kg/hr	903.9	3,586.8	85,405 kg/hr	903.9	3,586.8
Gas	5,374 kcal/ m^3	23,200 m^3/hr	124.9	495.8	117,100 m^3/hr	629.3	2,496.5
Char	7,212 kcal/kg	187,000 kg/hr	1,348.6	5,353.5	98,216 kg/hr	708.3	2,810.5
Sulfur	2,213 kcal/kg	555 kg/hr	1.23	4.9	771 kg/hr	1.71	6.8
Ammonia	5,372 kcal/kg	869 kg/hr	4.67	18.6	869 kg/hr	4.67	18.6
Heat Loss			458.1	1,815.4		593.5	2,355.8
Total energy output			2,841.4	11,275		2,841.4	11,275

Carrier	Heating Value	Illinois No. 6		
		Gas Reforming		
		Amount	Energy	
			(10^6 kcal/hr)	(10^6 Btu/hr)
Coal	6,956.1 kcal/kg	378,000 kg/hr	2,629.4	10,433.3
Total energy input			2,629.4	10,433.3
Syncrude	10,167 kcal/kg	59,611 kg/hr	606.1	2,404.4
Gas	6,273 kcal/ m^3	15,930 m^3/hr	99.9	395.8
Char	6,461 kcal/kg	208,837 kg/hr	1,349.3	5,354.5
Sulfur	2,213 kcal/kg	11,760 kg/hr	26.02	103.3
Ammonia	5,372 kcal/kg	869 kg/hr	4.67	18.6
Heat Loss			543.4	2,156.7
Total energy output			2,629.4	10,433.3

Table VIII-3
Sulfur Balance

Carrier	Utah A Seam				Illinois No. 6	
	Gas Reforming		Char Partial Oxidation*		Gas Reforming	
	10^3 kg/hr	tons/hr	10^3 kg/hr	tons/hr	10^3 kg/hr	tons/hr
Coal	1.89	2.08	1.89	2.08	13.98	15.42
Total input	1.89	2.08	1.89	2.08	13.98	15.42
Syncrude product	0.019	0.021	0.019	0.021	0.132	0.146
Char recovered	1.312	1.446	0.783	0.863	1.976	2.179
Sulfur (elemental)	0.556	0.613	0.767	0.846	11.757	12.963
Sulfides to atmosphere	0.004	0.004	0.008	0.008	0.117	0.129
Sulfur dioxide to atmosphere	—	—	0.314	0.346	—	—
Total output	1.89	2.08	1.89	2.08	13.98	15.42

*This process variation assumes by-product sale of desulfurized fuel gas and use of direct char combustion for process energy requirements.

3. DISCUSSION OF CONTROL PROCESSES

The five major waste streams emitted by the COED process and the proposed control and treatment methods are summarized in Table VIII-4.

(1) Control of Coal Dust

Most of the coal dust and fines produced during coal crushing and drying can be controlled with the aid of cyclone separators and bag filters. The recovered fines can be used as boiler fuel along with char. Additional precautions, such as enclosure of coal preparation operations, will minimize particulate emission (ref. 5).

(2) Utilization of Char

Approximately 50 to 60 percent of the feed coal in the COED process is recovered as char. Its heating value and sulfur content are approximately the same as those of the feed coal, and its volatile content is about 5 percent. This char can be used as power plant fuel after grinding, though preheated air

Table VIII-4
Nature and Treatment of Major Waste Streams

Waste	Sources	Treatment
Coal dust	Coal storage, crushings, drying, and handling	Cyclone separators bag filters, enclosure
Char	Pyrolysis reactors, oil recovery, and filtration	Various
Wastewater	Coal storage, oil recovery, oil hydrotreatment	Biological and modified Chevron
Hyrdrogen sulfide	Raw pyrolysis gas, plant fuel from hydrotreatment, char desulfurization, raw gas from partial oxidation of char	Stretford or Claus plant with tail gas cleanup
Sulfur dioxide	Steam and power plant	Not required for low sulfur char or fuel gas that is acid gas treated

and the addition of a more volatile fuel should be used for light-off (similar to anthracite combustion).

Upon combustion, char from Utah coal produces a flue gas containing 2.0 kg $SO_2/10^6$ kcal (1.1 lb of $SO_2/10^6$ Btu) and thus does not require desulfurization. Char from Illinois No. 6 coal contains 3.1 percent sulfur and requires pretreatment to minimize costly stack gas cleanup. This can be achieved through:

- Gasification to low-Btu gas
- Direct desulfurization.

Various procedures applicable for the gasification of char are covered in some detail in the Synthane process synopsis. Additional information is presented in Chapter III and in the process synopses for low-Btu gas production (ref. 5).

FMC has also investigated a process for the direct desulfurization of COED char. In this approach, the sulfur content of the thermally stable, highly porous, COED char can be reduced from 3.1 to 0.9 percent by reaction with H_2 at 879 degrees C (1600 degrees F), in the presence of an H_2S acceptor, such as calcined dolomite. The following reactions take place:

$$S_{char} + H_2 \longrightarrow H_2S \qquad (1)$$

$$CaO + H_2S \longrightarrow CaS + H_2O \qquad (2)$$

$$C + H_2O \longrightarrow CO + H_2 \qquad (3)$$

$$CO + H_2O \longrightarrow CO_2 + H_2 \qquad (4)$$

$$C + 2H_2 \longrightarrow CH_4 \qquad (5)$$

For the production rate of Figures VIII-1 and VIII-2, the desulfurization reactor is a 14.0 m (46 feet) ID x 17.0 m (55 feet) high refractory-lined shaft kiln.

Desulfurized char and spent acceptor are separated and cooled in a two-stage fluidized bed cooler. At an approximate fluidizing velocity of 0.3 to 0.6 m/sec (1 to 2 ft/sec), the 3 mm (1/8 inch) acceptor pellets tend to sink to the bottom of the fluidized bed while the minus 16 mesh char is fluidized above the acceptor. Acceptor and char are further separated with the aid of screens and electrostatic precipitators, and the product char contains about 0.4 percent dolomite.

Spent acceptor is ground to minus 48 mesh, mixed with water to form a 39 percent slurry, and regenerated in two 4.5 m (15 feet) ID x 30 m (100 feet) high regeneration towers in accordance with the following reactions:

$$CaS + H_2O + CO_2 \longrightarrow CaCO_3 + H_2S \qquad (6)$$

$$CaO + CO_2 \longrightarrow CaCO_3 \qquad (7)$$

The CO_2 for reactions (6) and (7) could be obtained from the Stretford off-gas. Reactions (6) and (7) are highly exothermic, and a temperature of 113 degrees C (235 degrees F) is maintained in the regenerator by the evaporation of a portion of

slurry water. Off-gases from the regenerator are sent to the sulfur recovery plant. The regenerated slurry of calcium carbonate and water is dried, the resultant cake is extruded to form 3 mm (1/8 inch) pellets and calcined in a two-stage calciner to recover CaO and a CO_2 by-product. The calcined extrusions, heated to 1000 degrees C (1850 degrees F), are recycled to the desulfurizer. Five percent of the acceptor is assumed to be lost either with char or during scrubbing, drying, and calcining. The heat required for calcination is provided by combustion of about 6.8×10^3 kg/hr (7.5 short tons/hr) of product char.

Gasification of char is covered in some detail under the Synthane process.

(3) Waste Water Treatment (Ref. 5)

The principal liquid waste streams are the leachings from coal storage, the condensate stream from oil recovery, and hydrotreatment liquor. The major pollutants in these streams are coal fines, oil, ammonia, and acid gas. Oils are removed primarily by an oil water separator, but liquid/liquid extraction may also be used as an alternative. Although most oils are recovered, several hundred ppm of hydrocarbons are retained in the treated wastewater.

The oil-stripped wastewater goes through a Chevron-type process (in this analysis) for removal of acid gas and ammonia in two stripping towers. Acid gas is sent to sulfur recovery; ammonia is recovered as a by-product. The purified wastewater will still contain the several hundred ppm of oils and small amounts of ammonia and sulfur compounds. Its quality is satisfactory for cooling water makeup, but not for boiler feed water. The low concentration of contaminants in cooling water are eliminated by biological action in the cooling system. The blowdowns from cooling towers and boiler can be treated in a sewage treatment plant, which yields an inert solid residue.

(4) Sulfur Recovery

A Stretford process was applied in this analysis for recovery of elemental sulfur from the acid gas stream of the Utah A Seam coal because of its low H_2S concentration (1.9 percent). The process recovers 99 percent of the feed sulfur as an elemental sulfur by-product.

For Illinois No. 6 coal, the H_2S concentration of the gas stream going to the sulfur recovery plant is about 20 percent. Here, the use of a Claus plant, followed by the Beavon process (or other tail gas treatment), is more appropriate. The recovery is assumed again to be 99 percent.

(5) Sulfur Dioxide

Stack gas cleanup would not be required for combustion of char from Utah A Seam coal, because the emissions from direct combustion would be about 2.0 kg $SO_2/10^6$ kcal, (1.1 lb $SO_2/10^6$ Btu), below the present New Source Performance Standards.

If char from Illinois No. 6 coal were to be combusted directly in a steam and power plant, the flue gas would require stack gas cleanup, before venting to the atmosphere. Alternatively, various lime treatment processes could be employed. These are considered proven by the EPA.

The Illinois No. 6 coal, after COED lime desulfurization, will contain about 0.9 percent sulfur; direct combustion of this char would emit about 2.7 kg $SO_2/10^6$ kcal (1.5 lb $SO_2/10^6$ Btu); therefore, stack gas treatment would still be required, but at significantly reduced loadings.

4. COSTS OF POLLUTION CONTROL*

Costs required for the control and treatment of the pollutants evolved in the pyrolysis of coal by the COED process are calculated

* The costs presented here are preliminary estimates; the actual costs of emission control in this process will not be known until a full-scale facility has been constructed and operated.

in this section. This process is currently at pilot plant development stage so the cost figures derived are largely based on the scaling up of the data accumulated during the PDU runs and estimates of costs for similar pollution control unit processes. The major assumptions and conventions adopted here are discussed in Chapter III. All by-product flow rate data presented in Figure VIII-1 and Tables VIII-1, VIII-2, and VIII-3 also apply.

The incremental* capital investment required to control the pollutants and waste streams discussed in Sections 2 and 3 of this process analysis are presented in Table VIII-5. The incremental annual operating costs for these emission control systems are presented in Table VIII-6. The investment and operating costs required have been calculated for several feedstock and process alternatives. The alternative feedstocks analyzed include a low and a high sulfur coal (0.5 percent sulfur Utah A Seam coal and a 3.7 percent sulfur Illinois No. 6 coal). These reported costs reflect the case where process hydrogen is produced by reforming a portion of the product gas into $CO + H_2$. An alternative method of on-site hydrogen generation-partial oxidation of product char and shifting of the resulting gas is costed for the Utah coal feed case.

The derivation of the formalae for calculating the incremental cost of clean fuel production due to pollution control is presented in Chapter III. For the discounted cash flow (DCF) method of cost accounting, the required incremental annual cost of clean fuel, X, for the assumed rate of return is:

$$X = N + 0.23816\ I + 0.1275\ S + 0.230777\ W$$

where

N = incremental net operating cost
I = incremental plant investment
S = startup costs
W = incremental working capital

* Incremental costs in this report refer to that portion of the total plant cost that is assignable to pollution control facilities.

Table VIII-5
Incremental Capital Investment [a] ($ Million)

Method of Hydrogen Generation	0.5% Sulfur Utah A Seam Coal						3.7% Sulfur Illinois No. 6 Coal		
	Gas Reforming			Char Oxidation			Gas Reforming		
Incremental plant investment [b]									
Dust emission control	1.7			1.7			1.7		
Wastewater treatment	3.7			3.7			6.5		
Stretford sulfur recovery	1.1			1.3			—		
Claus sulfur recovery with Beavon tail gas treatment	—			—			4.5		
Char desulfurization	—			—			15.0		
Subtotal plant investment		6.5			6.7			27.7	
Project contingencies [c]		1.0			1.0			4.2	
Incremental plant investment (I)			7.5	7.5		7.7	7.7		31.9	31.9
Startup costs [d] (S)			0.4	0.4		0.4	0.4		1.1	1.1
			Utility	DCF		Utility	DCF		Utility	DCF
Interest during construction [e]			1.3	1.8		1.3	1.8		5.4	7.6
Incremental working capital [f] (W)			0.2	0.2		0.2	0.2		0.7	0.8
Incremental capital investment (C)			9.4	9.9		9.6	10.1		39.1	41.4

Notes:

(a) Incremental plant investment, return on investment during construction, and working capital are treated as capital costs in year 0 (the year ending with completion of startup operation).

(b) Installed costs, including engineering design costs, contractors' profit and overhead.

(c) Includes costs for unexpected site preparation and hardware requirements at 15% of plant investment

(d) At 20% of incremental gross operating cost.

(e) For the DCF method, computed as the discount rate x incremental plant investment for 1.875 years' average construction period. $I(1+i)^n = I(1.12)^{1.875} = 1.23676I$ or $0.23676I$ additional investment

For the utility financing method, computed as the interest rate on debt x incremental plant investment x 1.875 years.

(f) Sum of materials and supplies at 0.9% of incremental plant investment and net receivable at 1/24 of annual incremental revenue.

Table VIII-6
Incremental Annual Operating Cost ($)

Feedstock	0.5% Sulfur Utah Coal						3.7% Sulfur Illinois Coal		
Method of Hydrogen Generation	Gas Reforming			Char Oxidation			Gas Reforming		
Labor									
Direct operating labor (3 men/shift x $5/hr x 8304 shift hrs/man yr)	124,600			124,600			373,800 (9 men/shift)		
Maintenance labor (1.5% of I)	112,500			115,500			478,500		
Supervisory (15% of direct operating and maintenance labor	35,600			36,000			127,800		
Incremental labor costs		272,700			276,100			980,100	
Administration and general overhead (60% of incremental labor)		163,600			165,700			588,100	
Other direct costs*		1,000,000			1,000,000			2,500,000	
Supplies									
Operating (30% of direct operating labor	37,400			37,400			112,100		
Maintenance (1.5% of I)	112,500			115,500			478,500		
Incremental cost of supplies		149,900			152,900			590,600	
Local taxes and insurance (2.7% of I)		202,500			207,900			861,300	
Incremental gross operating cost.			1,788,700			1,802,600			5,520,100
By-product credits									
Sulfur (expressed in long tons/day x 365 days/yr x 0.9 capacity factor x $10/LT)		43,100			59,800			912,100	
Ammonia (23.0 short tons/day x 365 days/yr x 0.9 capacity factor x $25/short ton)		188,900			188,900			188,900	
Less by-product credits			-232,000			-248,700			-1,101,000
Incremental net operating cost (N)			1,556,700			1,553,900			4,419,100

*This item includes catalysts and chemicals expended and utilities purchased for the pollution control processes.

For the utility financing case, it is:

$$X = N + 0.1198\,C + 0.0198W$$

where

C = required incremental capital investment
N and W = as defined above.

The annual production rate of clean fuel products (char, oil and gas) from the COED process, G, is:

$$65.2527 \times 10^{12} \text{ Btu/yr } (16.444 \times 10^{12} \text{ kcal/yr})$$

for the Illinois feed and

$$74.5795 \times 10^{12} \text{ Btu/yr } (18.794 \times 10^{12} \text{ kcal/yr})$$

for the Utah coal. For the char oxidation method of hydrogen generation using Utah coal, a production rate of

$$70.3190 \times 10^{12} \text{ Btu/yr } (17.720 \times 10^{12} \text{ kcal/yr})$$

was established.

The incremental cost of clean fuel, due to pollution controls is found as:

$$\frac{\text{annual cost of product fuel}}{\text{annual production rate}} = \frac{X}{G}$$

Solutions to the above equations for the incremental cost of clean fuel are shown in Table VIII-7. For the various alternatives costed, the added expense of producing clean energy from the COED process is found to range from 3.6 to 14.0¢/10^6 Btu of energy produced.

Table VIII-7
Incremental Cost of Clean Fuel Due to
Pollution Control for the COED Process

Method of Hydrogen Generation	0.5% Sulfur Utah Coal			
	Gas Reforming		Char Oxidation	
	$/yr	$/10^6 Btu	$/yr	$/10^6 Btu
Accounting Method				
DCF	3,440,100	0.046	3,484,900	0.050
Utility inancing	2,686,800	0.036	2,708,000	0.039

Method of Hydrogen Generation	3.7% Sulfur Illinois Coal	
	Gas Reforming	
	$/yr	$/10^6 Btu
Accounting Method		
DCF	12,341,500	0.189
Utility financing	9,117,200	0.140

5. REFERENCES

(1) Jones, J.F., "Project COED," Paper presented at Institute of Gas Technology Symposium on Clean Fuels from Coal, Chicago, 10-14 September 1973.

(2) "Char Oil Energy Development," Project COED (FMC), Final Report, Office of Coal Research, Department of the Interior, June 1971.

(3) "Char Oil Energy Development, The Desulfurization of COED Char, Part III," Project COED (FMC), Interim Report No. 2, Office of Coal Research, Department of the Interior, May 1970.

(4) "Char Oil Energy Development," Project COED (FMC), Interim Report No. 1, Office of Coal Research, Department of the Interior, February 1970.

(5) Specific Comments from Process Developer, Correspondence from FMC Corporation, April 1974.

1. Product Yield

Yields shown in Table VIII-1 were obtained from published data. COED pyrolysis yields are now as follows:

	Utah A Seam	Illinois No. 6
Char, ton/ton dry coal	0.55	0.54
Oil, bbl/ton dry coal	1.32	1.09
Pyrolysis gas, MSCF/ton	10.3	10.4

2. Process Description

- Combustion of char must be with steam-oxygen mixture to supply heat requirements for the last three stages. Using oxygen only would cause localized overheating and clinkering. The hydrogen produced using steam-oxygen

for the heat requirements for the last three stages is used to produce all the hydrogen required in the hydrotreating section of the plant. This eliminates the need of char oxidation as a source of hydrogen generation.

- Hydrogenation may be done at pressures ranging from 1500 psig to 3000 psig.

- High pressure separation is used to separate the oil and hydrogen rich gas stream. The hydrogen rich gas stream is recycled to the reactor through a recycle compressor. A small purge stream of the recycle gas stream is sent to the purification section for use in hydrogen manufacture.

- After pyrolysis, the sulfur remaining in the char is about 45 percent of the sulfur in the Illinois feed, not 14.1 percent as indicated.

3. Discussion of Control Processes

- Coal dust and fines generated in the process are fed into the fourth stage reactor and gasified. The filter cake from the filtration section is also fed into the fourth stage reactor.

- All wastewater streams from the COED process are recycled to the fourth stage reactor. This destroys all the organic contaminants and greatly reduces the wastewater treatment required for a COED facility.

4. Additional Comments

The use of char desulfurization has been recommended to meet environmental restrictions with high sulfur coals. However, the char cannot be sufficiently reduced in sulfur level, and stack gas treatment is still required to remove the SO_2 after char combustion. The use of both char desulfurization and stack gas scrubbers may not be the best

choice. Char gasification is a preferred way of producing a low sulfur, environmentally acceptable fuel gas. This approach is noted in the report but not discussed in detail.

IX. THE SOLVENT REFINED COAL (SRC) PROCESS

The Solvent Refined Coal (SRC) process is essentially a mild hydrogenation process that produces a low ash, low sulfur, high heating value liquid or solid fuel from coal. It originated as a result of research performed from 1962 to 1964 by the Spencer Chemical Company on a grant funded by the Office of Coal Research (OCR). In October 1966, OCR contracted the Pittsburg and Midway Coal Mining Company (PAMCO), an affiliate of Spencer Chemical, to design, construct and operate an SRC pilot plant. This plant used various grades of bituminous and lignite coals.

In the SRC process, a highly aromatic solvent, a by-product of the process, dissolves coal at 454 degrees C (850 degrees F) and 71.3 kg/cm^2 (1000 psi). The solution is filtered to remove coal ash and unreacted carbon, and the solvent is removed by distillation. The coal product contains substantially less sulfur than originally contained in the feed coal and little or no ash. It is, therefore, an attractive fuel for power plants and other industrial uses. The deashed coal product also appears to be an attractive feed for delayed coking units which make electrode grade coke*.

The solid coal product may be further hydrotreated to make liquid hydrocarbons. This process is similar to the hydrocracking of petroleum feedstocks and is discussed in the Gas Combustion Retort and COED process synopses.

PAMCO is constructing a 45 m ton/day (50 short tons/day) pilot plant, designed by Stearns-Roger Corporation at a site in Tacoma, Washington. This $17.5 million plant is now nearing completion.

1. PROCESS DISPLAY

The flow diagram and energy balance for the SRC process is presented in Figure IX-1, and Tables IX-1, IX-2 and IX-3 show the

* Electrodes made of high purity coke are used in many chemical processes.

FIGURE IX-1
The Solvent Refined
Coal Process

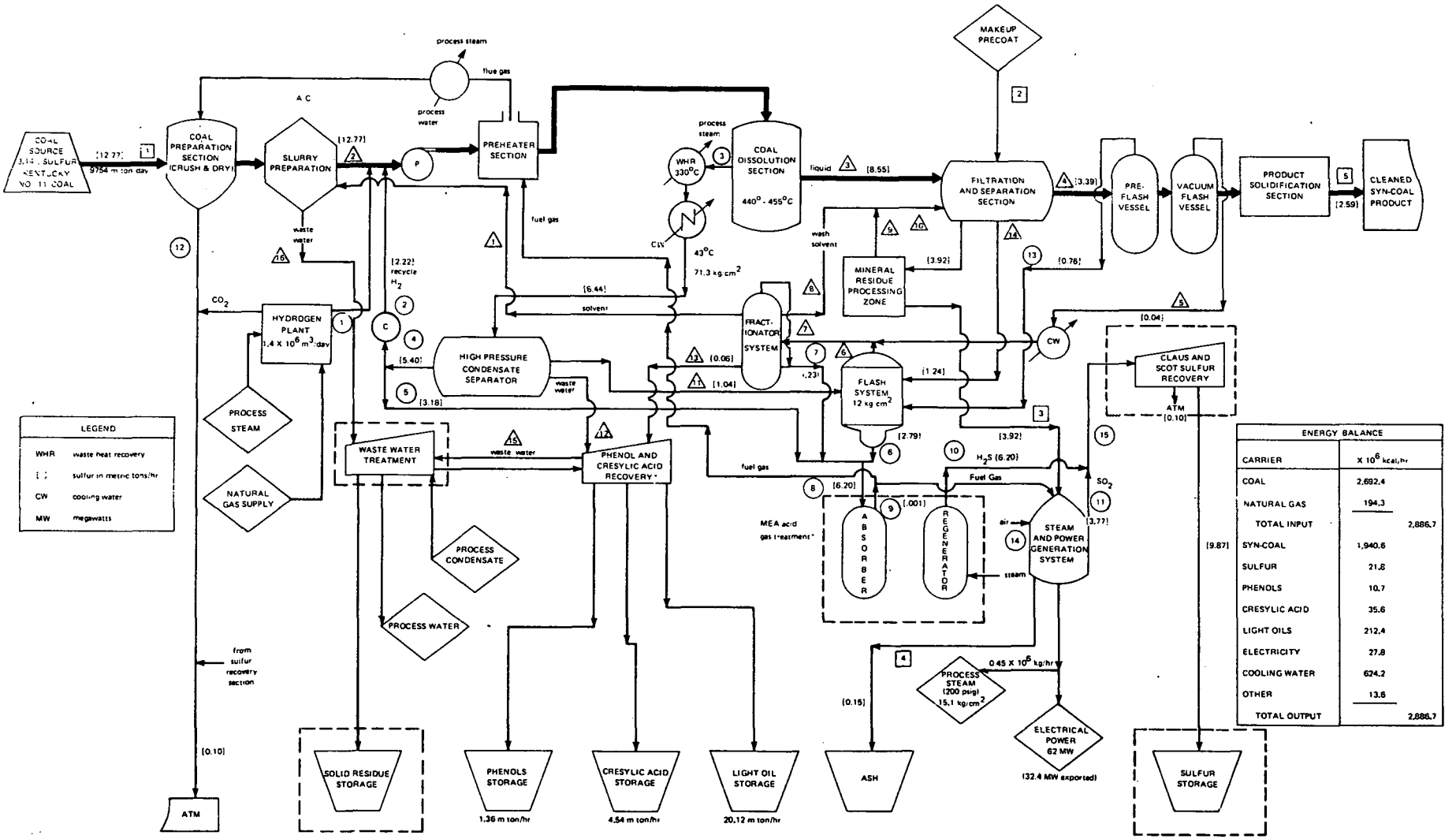

LEGEND	
WHR	waste heat recovery
[ ]	sulfur in metric tons/hr
CW	cooling water
MW	megawatts

ENERGY BALANCE		
CARRIER	$\times 10^6$ kcal/hr	
COAL	2,692.4	
NATURAL GAS	194.3	
TOTAL INPUT		2,886.7
SYN-COAL	1,940.6	
SULFUR	21.8	
PHENOLS	10.7	
CRESYLIC ACID	35.6	
LIGHT OILS	212.4	
ELECTRICITY	27.8	
COOLING WATER	624.2	
OTHER	13.6	
TOTAL OUTPUT		2,886.7

*Specific treatment and recovery processes were selected by the process developer.

Table IX-1
Composition of Gaseous Streams

Streams	1	2	3	4	5	6	7	8	9	10	11	12*	13	14	15
Components, mole %															
H_2	100.00	36.73	22.24	36.73	36.73	14.85	1.23	30.95	33.92	--	--		9.10		--
CO_2	--	2.30	1.49	2.30	2.30	2.83	1.14	2.42	10ppmV	27.55	15.99		2.14		16.55
H_2S	--	4.38	3.15	4.38	4.38	11.71	19.17	6.35	8ppmV	72.45	--		16.98		3.55
SO_2	--	--	--	--	--	--	--	--	--	--	2.27		--		2.16
N_2	--	--	--	--	--	--	--	--	--	--	79.00		--	79.00	75.14
C_1	--	43.88	27.54	43.88	43.88	40.84	9.12	42.71	46.81		--		33.01		--
C_2	--	9.50	6.63	9.50	9.50	19.15	23.07	12.02	13.18		--		21.02		--
C_3	--	2.85	2.40	2.85	2.85	9.12	35.22	4.78	5.24		--		13.71		--
C_4	--	0.36	0.42	0.36	0.36	1.50	11.05	0.77	0.85		--		4.04		--
H_2O	--	--	36.13	--	--	--	--	--			--	100.00			--
O_2	--	--	--	--	--	--	--	--			2.74			21.00	2.60
Total	100.00	100.00	100.00	100.00	100.00	100.00	100.00	100.00	100.00	100.00	100.00	100.00	100.00	100.00	100.00
$(Ft^3/hr) \times 10^6$	2.06	1.33	5.34	3.22	1.89	0.62	0.03	2.55	2.33	0.22	4.34	1.14	0.12	4.34	4.56
(Cubic meters/hr) x 10^4	5.83	3.77	15.12	9.12	5.35	1.76	0.08	7.22	6.60	0.62	12.29	3.23	0.34	12.29	12.91
Lb-Moles/hr	5,448	3,500	14,094	8,499	4,999	1,644	82	6,724	6,135	589	11.443	3,013	308	11,443	12,032
(Gm-moles/sec)	(687)	(441)	(1,777)	(1,072)	(630)	(207)	(10)	(848)	(774)	(74)	(1,443)	(380)	(39)	(1,443)	(1,517)
Light oil, lb/hr	--	1,101	25,138	2,617	1,516	1,261	678	3,455	3,455	—	—	—	19,890	—	—
(kg/hr)	--	499	11,403	1,187	678	572	308	1,567	1,567	—	—	—	9,022	—	—
Wash solvent, lb/hr	—	—	—	—	—	—	—	—	—	—	—	—	47,017	—	—
(kg/hr)	—	—	—	—	—	—	—	—	—	—	—	—	21,327	—	—
Process solvent, lb/hr	—	—	108,558	—	—	—	—	—	—	—	—	—	209,908	—	—
(kg/hr)	—	—	49,242	—	—	—	—	—	—	—	—	—	95,214	—	—
Phenols, lb/hr	—	—	3,000	—	—	—	—	—	—	—	—	—	—	—	—
(kg/hr)	—	—	1,361	—	—	—	—	—	—	—	—	—	—	—	—

*Only the water vapor content of this stream can be estimated from the source data.

Table IX-2
Composition of Liquid Streams

Stream	1	2	3	4	5	6	7	8	9	10	11	12	13	14	15	16
Components, mole %																
H_2			18.20	8.80		0.81	0.75				2.59			21.33		
CO_2			2.60	2.11	1.04	0.67	0.70				2.87			2.76		
H_2S			11.02	17.24	24.93	14.02	14.89				14.33		8.17	8.94		
C_1			41.34	32.44	15.90	4.98	5.85				30.26		0.73	44.30		
C_2			16.44	21.09	23.23	16.33	16.88				25.42		7.16	14.89		
C_3			8.37	14.04	23.70	40.23	38.91				18.93		44.70	6.49		
C_4			2.03	4.28	11.20	22.96	22.02				5.60		39.24	1.29		
Total			100.00	100.00	100.00	100.00	100.00				100.00		100.00	100.00		
Lb-Moles/hr			1,275	318	11	123	134				503		52	956		
(Gm-moles/sec)			(161)	(40)	(1)	(15)	(17)				(63)		(6)	(121)		
Light oil, lb/hr			31,295	24,462	4,572	47,983	52,555	—	—	—	22,521	—	51,877	6,833	—	—
(kg/hr)			14,195	11,096	2,074	21,765	23,839	—	—	—	10,216	—	23,531	3,099	—	—
Phenols, lb/hr			—	—	—	—	—	—	—	—	—	3,000	—	—	9	—
(kg/hr)			—	—	—	—	—	—	—	—	—	1,361	—	—	4	—
Cresylic acid, lb/hr or kg/hr			—	—	—	—	—	—	—	—	—	—	—	—	100ppmW	—
Wash solvent lb/hr			—	106,979	59,962	54,797	114,759	114,759	94,025	208,784	—	—	—	7,780	—	—
(kg/hr)			—	48,526	27,199	24,856	52,055	52,055	42,650	94,704	—	—	—	3,529	—	—
Process solvent, lb/hr	1,666,667	1,666,667	1,558,109	1,535,074	1,325,166	341,501	1,666,667	—	—	—	108,558	—	—	23,035	—	—
(kg/hr)	756,000	756,000	706,758	696,310	601,095	154,905	756,000	—	—	—	49,242	—	—	10,449	—	—
Coal product, lb/hr	—	—	488,376	488,376	—	—	—	—	—	—	—	—	—	—	—	—
(kg/hr)	—	—	221,527	221,527	—	—	—	—	—	—	—	—	—	—	—	—
Mineral residue, lb/hr	—	—	90,025	—	—	—	—	—	—	—	—	—	—	—	—	—
(kg/hr)	—	—	48,835	—	—	—	—	—	—	—	—	—	—	—	—	—
Water, lb/hr	—	—	—	—	—	—	—	—	—	—	—	91,667	—	—	91,667	8,427
(kg/hr)	—	—	—	—	—	—	—	—	—	—	—	41,580	—	—	41,580	3,822
Feed coal, lb/hr	—	833,333	—	—	—	—	—	—	—	—	—	—	—	—	—	—
(kg/hr)	—	378,000	—	—	—	—	—	—	—	—	—	—	—	—	—	—

Table IX-3
Composition of Solids Streams

Stream	1	2	3	4	5
Components, weight %					
C	65.80		27.01	3.95	88.16
H	4.36		--	--	5.23
N	1.00		--	--	1.54
S	3.14		9.60	0.54	1.17
O	9.56		--	--	3.42
Ash	6.63		63.69	95.51	0.48
Mositure	9.51		--	--	--
Total	100.00		100.00	100.00	100.00
Coal, lb/hr	896,000	--	--	--	488,376
(kg/hr)	406,426	--	--	--	221,527
Precoat, lb/hr	--	250	250	250	--
(kg/hr)	--	113	113	113	--
Mineral residue lb/hr	--	--	90,025	--	--
(kg/hr)	--	--	40,835	--	--
Ash, lb/hr	--	--	--	59,750	--
(kg/hr)	--	--	--	27,103	--
Heating value, Btu/lb	11,924	--	4,191	--	15,768
(kcal/kg)	6,624	--	2,328	--	8,760

gaseous, liquid, solid stream compositions and flow rates referred to in Figure IX-1. The data used in this analysis are based on an economic evaluation performed by Stearns-Roger Corporation for OCR (referenced at the end of this chapter) completed in 1969. At this writing more recent data were not available; however, it is very likely that the process has been further developed in the past four or five years.

(1) Bases for Analysis

The analysis shown is for a 3.14 percent sulfur, Kentucky No. 11 coal whose composition is shown in Table IX-4.

Table IX-4
Component Analysis for Coal Feedstock*

Component	Weight %
Carbon	65.80
Hydrogen	4.36
Nitrogen	1.00
Sulfur	3.14
Oxygen	9.56
Ash	6.63
Moisture	9.51
TOTAL	100.00

*Kentucky No. 11

This plant converts 9,754 m tons/day (10,752 short tons/day) of coal feed to 5,316 m tons/day (5,860 short tons/day) of a depolymerized, de-ashed (0.48 percent ash) coal product containing 1.17 percent sulfur. The heating value of the solvent refined coal of 8,760 kcal/kg (15,768 Btu/lb) equates to a daily plant output of 46,620 x 10^6 kcal (185 x 10^9 Btu). The plant's thermal efficiency, coal plus fuel gas feed-to-coal product, is determined to be 67 percent.

(2) Layout and Symbols

The general direction of the process flow is from the coal supply on the left to the product fuel on the extreme right of the flowsheet, with residuals and by-products shown along the

bottom. The bold line indicates the flow of the primary dissolution process. The portion of the process contained within the dashed lines was not defined by the process developer but was assumed for this analysis.

Streams labelled with circles, triangles or rectangles refer to the gaseous, liquid or solid stream compositions shown in Tables IX-1, IX-2 and IX-3, respectively. The overall energy balance is shown on Figure IX-1 and calculated in Table IX-5.

The rhombic-shaped units represent intermediate products or uses for which the distribution is not shown. Pollutant cleanup processes are indicated by sloping rectangles. The treatment and recovery processes which this symbol represents are discussed in the process description and pollution control sections of this process summary. For an in-depth explanation of each licensed process mentioned, refer to Chapter III as well as to readily available process literature and to the bibliography included in this report.

2. PROCESS DESCRIPTION

The unit processes which define the SRC process are described in this section. By-product manufacture and pollutant generation are discussed where appropriate. The discussion of pollution control processes is covered in the next section.

In brief, the feed coal is crushed, dried and mixed with a process-derived solvent. The mixture is preheated and dissolved in a hydrogen atmosphere. Ash and unreacted carbon are filtered from the resulting liquid before it is flashed (rapidly vaporized) to remove solvent and light oil fractions containing sulfur. The remaining liquid is solidified by cooling, yielding the low sulfur product fuel.

It should be stressed that the characteristics of the solid, coal product from the SRC process is a function of the feedstock selected. In particular, the sulfur content of the product will be a function of the quantity and character of the sulfur in the raw feed coal. An improvement in desulfurization is expected if the sulfur content of the feed is primarily pyritic rather than organic since the decomposed pyritic-sulfur (ferrous sulfide) can be readily removed with the ash. Similarly, coal with high ash alkalinity will tend to remove the sulfur as calcium sulfide in the ash. The degree of desulfurization of the pyritic and organic sulfur to H_2S gas is a complex function of time, temperature and pressure which must be determined experimentally.

Table IX-5
Energy Balance Calculations

Carrier	Calculations	Energy	
		(x 10^6 Btu/hr)	x 10^6 kcal/hr
Coal	896,000 lb/hr x 11,924 Btu/lb	10,684.2	2692.4
Natural Gas		771.0	194.3
Total energy input		11,455.2	2886.7
Solvent refined coal	488,376 lb/hr x 15,768 Btu/lb	7,700.7	1940.6
Sulfur	10.88 short tons/hr x 2000 lb/short tons x 3783.4 Btu/lb	86.7	21.8
Phenols	1.5 short tons/hr x 2000 lb/short tons x 14,117.6 Btu/lb	42.4	10.7
Cresylic acid	5.0 short tons/hr x 2000 lb/short tons x 14,117.6 Btu/lb	141.2	35.6
Light oil	22.18 short tons/hr x 2000 lb/short tons x 19000 Btu/lb	842.8	212.4
Electricity (exported)	32,390 kW x 3413 Btu/kWh	110.5	27.8
Cooling water	165,000 gal/min x 60 min/hr x 8.34 lb/gal x 30°F Δ T x 1 Btu/lb°F	2,477.0	624.2
Other*	By difference	53.9	13.6
Total energy output		11,455.2	2886.7

*Include heating values of other products, sensible heat of product streams, heat lost to the atmosphere.

If the sulfur content of the depolymerized coal product is too high for direct combustion, as in the case presented in this synopsis, the solid product may be further hydrodesulfurized to yield a fuel oil product. Alternatively, stack gas from the combustion of this coal can be desulfurized more readily than if raw untreated coal had been burned.

(1) Coal Preparation

The coal is mined, crushed to 2.54 cm (1 in) and transported to the plant by conveyor belt, truck or train. Suitable coal storage must be provided at the mine and at the plant. At the plant, the coal is further crushed to 0.3 cm (.125 in) in double-ring disintegrator-type crushers by recirculating the oversize material (20-30 percent of the load). The oversize product is separated over screens for recirculation to the crushers. Two parallel circuits of grinding equipment are required due to the capacity limitations of the disintegrating equipment. Screen undersize drops into a distributing bin. Coal is conveyed from this distribution bin to flash dryers, also contained within the coal preparation section shown in Figure IX-1. The coal passes countercurrent to hot flue gas from the direct fired preheaters just upstream of the dissolvers. The flash dryer exhaust gas (stream 12) is cleaned in mechanical flue gas cleaners and precipitated dust is returned to the coal stream.

(2) Slurry Preparation

The feed processed through the coal preparation section of Figure IX-1 is weighed into slurry mix tanks to control the solvent-to-coal ratio. This wash solvent is generated continuously, and recirculated through the process. A centrifugal recirculating pump is used to mix the slurry. Since the coal leaving the preparation section is only partially dried, residual moisture will be vaporized by the hot solvent in the flash tanks and vented through moisture condensors provided on the slurry mix tanks (stream 16).

(3) Preheater Section

Dissolving of the coal takes place in two steps in the SRC process: the preheater section and the coal dissolution section. In the preheater section, the coal-solvent slurry is exposed to hydrogen under controlled time, temperature and pressure conditions. It is heated to dissolution temperature before flowing to the coal dissolution section where the primary solation occurs.

Reciprocating pumps are used to feed the slurry to the preheaters since multi-stage centrifugal pumps, for transporting the 0.3 cm (.125 in) coal particles in hot solvent, are not readily available. Multiple pumps are provided to proportion the slurry among the 16 streams that are required in this section. These streams are joined by a measured amount of hydrogen and then further divided into 32 passes through four preheaters so as to maintain a low fluid velocity in the pipes and thus minimizes erosion, to maintain economically small pipe diameters, and to assure the required time-temperature profile. A steam coil in each preheater recovers waste heat from the stack gases before they are transferred to the coal preparation area where it is used to dry the feed.

(4) Coal Dissolution Section

Four dissolvers are used for this facility design. At a pressure of 71.3 kg/cm^2 (1000 psig) and temperature between 440 degrees and 455 degrees C (825 degrees to 850 degrees F), a retention time in the dissolvers of 15 minutes is adequate to dissolve most of the organic matter in the coal. Dissolver effluent is cooled to 330 degrees C (about 625 degrees F) where its liquid and vapor phases, stream 3 and 3 respectively are separated. The liquid slurry stream is sent to the filtration and separation system. The vapor stream proceeds to a complex waste heat recovery system where it is partially condensed. It is finally cooled to 43 degrees C (110 degrees F) in a cooling-water heat exchanger. This stream is separated into three streams by a high pressure condensate separator:

- Stream 12 — an aqueous stream which is directed to the phenol and cresylic acid recovery unit

- Stream 11 — a hydrocarbon stream proceeds to a complex flash system where it is depressurized to about 12 kg/cm^2 (155 psig). The flashed vapors, stream 6, are sent to the acid-gas treatment section while the remaining liquid, stream 6, proceeds to solvent recovery (discussed later)

- Stream 4 — a high pressure, 43 degrees C (110 degrees F) vapor stream which is further divided into two fractions:

  - One stream (stream 2) is recompressed, mixed with makeup hydrogen, and fed to the slurry entering the preheater

  - The other stream (stream 5) is expanded and sent to the acid-gas treatment section.

Each of these streams is discussed further when the appropriate processing units are considered.

(5) Filtration and Separation System

The liquid stream from the coal dissolution section proceeds to the filtration and separation system where ash is removed. Experts in the field of solid-liquid separation agree that the problem presented by this SRC process is exceptionally difficult.

The Consolidation Coal Company evaluated three solid-liquid separation techniques in its coal liquification pilot plant: filters, centrifuges and cyclones. They found cyclones to be the most reliable. It should be noted, however, that the filters at this plant were purchased on a least-cost basis; they were the first units of this type made by the manufacturer; and, they suffered from inherent mechanical problems. Since the product fuel generated by the SRC process may eventually undergo catalytic hydrocracking to produce a syncrude, a solid-free stream is necessary. This requirement eliminates the use of centrifuges or cyclones, leaving filtration as the primary technique available. This technique has, therefore, been selected for discussion in this analysis.

The solvent and dissolved coal slurry, stream 3 is filtered through rotary precoat filters containing a bed of diatomaceous earth. The filters are enclosed in a pressure vessel maintained at 11.6 kg/cm^2 (150 psig) and 316 degrees C (600 degrees F). The solids entrained in the filters are washed by a light solvent (stream 10) from the fractionation section (to be discussed) and are removed to the mineral residue processing zone.

In this type filter, solid-liquid separation is accomplished by forcing the slurry through the layer of diatomite precoat previously deposited on the exterior surface of the drum-type filter. The resulting filtrate is essentially free of solid. About 100 ppm of suspended material may remain. After spraying a light solvent on the filter to wash out the residual filtrate, the outside layer of diatomite is shaved from the precoat to ensure a fresh surface for further filtering. About 50 to 100 hours of operation are expected before the precoat is exhausted and a new layer of diatomaceous earth must be applied. As seen from Table IX-3, stream 2, about 113 kg/hr (250 lb/hr) of precoat material will be consumed in this operation. The shavings join the filtered solids and some wash solvent in the mineral residue processing zone.

(6) Mineral Residue Processing Zone

In the mineral residue processing zone, the filter shavings and wash solvent, containing minimal coal-oil, drop into a pressurized surge pot which is fed to dryers by a screw conveyor. Screw conveyors are used because of the gummy characteristics of this stream. The dryers, rotary drum type, recover the wash solvent (stream 9) which is reused in the filtration system.

The remaining dried solid, stream 3, containing carbon, coal ash and 9.6 percent sulfur is sent to the steam and power generation section. Alternatively this residue may be oxygen gasified to produce fuel gas for steam generation and hydrogen, eliminating the need for natural gas supply.

(7) Steam and Power Generation

The solid stream (stream 3) from the mineral residue processing zone is used as fuel in fluidized bed boilers(or after

gasification in direct-fired boilers) to generate the steam and electrical energy requirements of the process. The ash (mineral residue remaining after carbon has been consumed during combustion) can be stored in silos and periodically transferred to the worked-out mining areas for disposal. The steam generated is saturated at a pressure of 15 kg/cm^2 (200 psig). The sulfur content of the flue gas is sufficiently high that it must be further processed to minimize air pollution.

This process, as designed, makes significant use of waste heat boilers to recover process steam. Sufficient steam is generated to supply over one million pounds per hour (about 450,000 kg/hr) for process steam or for generation of electricity. The electrical generating capacity of the facility is sufficient to generage 32.4 MW of electricity more than the 29.5 MW needed to satisfy process requirements.

(8) Solvent Recovery System (Vacuum Flash, Flash System, Fractionation System)

The filtrate from the filtration and separation system (stream 4) contains the solubilized coal, the slurry solvent and some of the wash solvent used in the filtration unit. The filtrate is first preflashed to remove the lightest materials. This vapor (stream 13) is combined with the condensate from the high pressure condensate separator (stream 11). This combined stream is flashed through intermediate and low pressure flash vessels in the flash system where some of the H_2S is removed (stream 6). The remaining liquid is preheated and sent to the fractionation system (stream 6). The liquid from the preflash unit is next flashed in the vacuum flash vessel where the overhead vapor (stream 5) is removed. This steam is condensed with cooling water and then pumped to the fractionation system also. The liquid remaining in the vacuum flash vessel is sent to the product solidification section.

(9) Product Solidification

In this section, the hot, stripped and de-ashed product from the vacuum flash vessel, a liquid at this elevated temperature (200 degrees to 260 degrees C or 400 degress to 500 degrees F), is cooled in drums which solidifies the product.

This cleaned coal can then be readily transported on belt conveyors to storage bins for subsequent rail shipment to purchasers.

With further hydrogenation, such as by low-temperature catalytic cracking, this solvent refined coal can be converted into hydrocarbons which are liquid at room temperature.

(10) Hydrogen Generation

The SRC process includes a conventional plant for generating hydrogen by the steam reforming of natural gas ($CH_4 + H_2O \longrightarrow 3H_2 + CO$) followed by shift conversion to yield a hydrogen-rich gas stream ($CO + H_2O \rightarrow H_2 + CO_2$). This process of on-site hydrogen generation is discussed in more detail in Chapter XI on hydrodesulfurization of fuel oil. This plant must satisfy process requirements for $1.4 \times 10^6 m^3/day$ ($50 \times 10^6 ft^3/day$) of hydrogen. The alternative use of mineral residue through gasification to produce fuel gas and hydrogen would eliminate the need for a natural gas reformer.

(11) Energy Balance

The overall energy balance for the SRC process is presented in Figure IX-1 and derived in Table IX-5. From this energy balance, the thermal efficiency of the process is found to be:

$$\frac{7,700.7 \times 10^6 \text{Btu/hr of cleaned product coal}}{11,455.2 \times 10^6 \text{Btu/hr of feed}} = 67.2 \text{ percent}$$

(12) Sulfur Balance

The sulfur balance for the 3.14 percent* sulfur, Kentucky No. 11 coal feedstock is quantified in Table IX-6 and discussed in Section 3 of this chapter. The reported sulfur output of 12,773 kg/hr (28,160 lb/hr) is the total amount of sulfur evolved (220 lb/hr) vented to the atmosphere from the sulfur recovery plant, 64 kg/hr (140 lb/hr) remaining with the liquid by-products, and 2594 kg/hr (5720 lb/hr) remaining in the solvent refined product coal.

* 3.74 percent by weight when calculated on a dry, ash-free basis.

Table IX-6
Sulfur Balance for the SRC Process

Carrier	lb/hr	kg/hr
Input		
Coal feed	28,160	12,773
Total input	28,160	12,773
Output:		
Solvent refined product coal	5,720	2,594
Elemental sulfur	21,760	9,870
Ash	320	145
Discharged to atmosphere	220	100
Liquid by-products	140	64
Total output	28,160	12,773

3. DISCUSSION OF POLLUTION CONTROL PROCESSES

The major waste streams occurring in the SRC process and their proposed treatment are discussed in this section and summarized in Table IX-7.

(1) Acid-Gas Removal

Several of the sulfur containing gas streams from the process are combined and sent through an MEA (monoethanolamine) acid-gas treatment facility to recover the sulfur in the form of H_2S. These streams consist of the

- Overhead vapor stream from the high pressure condensate separator (stream 5)
- Effluent from the flash system (stream 6)
- Overhead gases from the fractionation system (stream 7).

Table IX-7
Source and Treatment of Major Waste Streams

Waste	Source	Treatment
Coal dust	Crushers, driers	Cyclone separators, bag filters
Hydrogen sulfide (intermediate stream) and sulfur dioxide	MEA acid-gas treatment and fluidized bed boilers	Claus and SCOT
Phenols, cresylic Acids, light oil	Water condensate	Solvent extraction, active carbon adsorption
Mineral residue	Fluidized bed boilers	None required. Used as minefill
Combustion gases	Process heaters	None required. Vented to atmosphere

Though the process developer did not specify the type of acid-gas removal, it was assumed that a simple MEA system would be satisfactory. The primary difficulty with MEA systems is that they do not handle carbonyl sulfide (COS). Due to the high water vapor-to-CO_2 ratio in this stream, however, COS is not expected to be present in any significant quantity*. The desulfurized gas (stream 9) contains propane, butane and some light oil. It can be readily consumed in direct fired heaters and preheaters to generate process steam. The flue gas, containing only 8 ppmV of sulfur requires no further treatment and can be vented to the atmosphere.

The sulfur-rich regenerator effluent stream (stream 10) contains about 72 percent H_2S. This is satisfactory feed for a Claus plant to produce elemental sulfur; however, the process developer has added a further complexity as discussed in the next subsection. If the mineral residue is gasified, additional sulfur removal will be required for that stream.

(2) Sulfur Recovery

The process developer suggests combining the concentrated H_2S-rich stream from the acid-gas treatment section (stream 10) with stream 11, the SO_2 containing flue gas from the steam and power generation section. This combined stream is used as the feed to the sulfur recovery plant.

* The quantity of CO_2 and H_2S present in the reaction, $COS + H_2O \rightleftarrows CO_2 + H_2S$ implies negligible sulfur existing as COS.

The amount of sulfur dioxide generated during steam and power generation is approximately correct for oxidizing the quantity of hydrogen sulfide recovered from the acid-gas treatment unit. Conceptually, therefore, these streams could be mixed and reacted over Claus catalysts to form elemental sulfur. However, the effective sulfur concentration feeding this Claus unit is equivalent to only a 6.5 percent H_2S stream feeding a conventional Claus plant. With this low concentration stream, the efficiency of the Claus catalyst is reduced and sulfur recovery, even with multiple stages, is not expected to be over 50 to 70 percent. A tail gas purification unit, therefore, also becomes a requirement.

The SCOT process, developed by the Shell Development Company, could be applied to treat the Claus tail gas. In the SCOT process, the Claus feed is hydrogenated over cobalt-molybdenum catalyst which reduces the sulfur compounds to H_2S. This H_2S is selectively withdrawn by a diisopropanolamine (DIPA) system*. The H_2S stream from the DIPA system is recycled to the Claus plant, thereby improving the H_2S-to-SO_2 ratio in the Claus feed.

Engineering practice suggests that the modified Claus sulfur recovery facility, as discussed above, might not be the most desired alternative. During plant upsets, the flow, and therefore the ratio of the H_2S to the SO_2 may vary. In addition, when processing different coals, this critical $H_2S : SO_2$ ratio may be upset due to the varying proportions of organic and pyritic sulfur in the feedstock. It is, therefore, suggested that these two streams be processed separately as follows:

- The H_2S-rich stream is an excellent feed for a conventional Claus plant. Any Claus tail gas purification process can be added.

- The flue gas stream from the steam and power generation section contains about 2 percent SO_2. This is too high for most direct stack gas cleanup systems. An operable scheme might be a Wellman-Lord process to concentrate the SO_2 followed by an Allied process to reduce it to elemental sulfur. In

* A DIPA system could have been chosen for the main acid-gas removal unit so that a single regenerator could have been used for both the acid-gas plant and the Claus tail gas plant.

this scheme, one Claus plant could be used for both the acid-gas stream and the effluent stream from the Allied process, but these streams would be independent so that plant upsets should not significantly affect sulfur emissions. If the mineral residue is gasified, a separate SO_2 stream is not generated and the Claus plant operation is simplified.

(3) Solid Waste Streams

Coal dust is generated during the crushing and drying processes of the feed preparation step. Cyclone separators are used to remove most of the fines. Bag filters complete the cleanup before the gases are vented to the atmosphere. These collected solids are directed to the feed slurry tank for use in the process. The quantity of fines expected to escape the dust removal system is minor.

The largest volume of solids from the plant is the mixture of coal ash and filter material which is removed from the fluidized bed boilers (explained in Section 2). Because this material has been well burned, it contains a minimum amount of carbon and a low concentration of sulfur. Residual solids from the fluidized bed boilers are sent to the mining area for disposal. Solid residue from the wastewater treatment section is also sent to the worked out portions of the mines. All of this material is relatively inert and should pose no problem of leaching or oxidation.

Periodically, the catalyst in the shift conversion reactor of the hydrogen plant must be replaced. A conventional shift conversion catalyst is iron oxide. Before removal from the reactor vessel, the catalyst is carefully oxidized in air to prevent auto oxidation. After removal from the reactor vessel, the catalyst is also discarded in the worked out mining area.

(4) Liquid Waste Streams

The liquid waste streams from this facility will contain phenol and cresylic acids.* More development work is required

* An oily mixture of phenol and cresol compounds.

to demonstrate a process for the recovery of cresylic acids from water streams, although the technology for phenol recovery is well known. In this analysis, the cresylic acids are reduced to about 100 ppm in the wastewater by a combination of solvent-extraction and stripping. Cresylic acid is then recovered from the solvent by distillation or a combination of distillation and extraction. Process water, containing residual phenol and cresylic acids, is filtered through activated carbon. The carbon absorbs cresylic acids and phenol. These compounds are then regenerated by stripping with 15.1 kg/cm^2 (200 psig) steam. The stripped acids are reprocessed in the recovery plant. An alternate to recovering the phenols and cresylic acids would be consumption of the wastewater with destruction of these components in the mineral residue gasifier.

Although not discussed by the process developer, it has been calculated that 790 kg/hr (20.9 short tons/day) of anhydrous ammonia can also be produced from the aqueous stream from the high pressure condensate separator (stream 12). To recover this ammonia, after phenol and cresylic acid separation, the wastewater must be passed to a Chevron unit for further purification. Some H_2S and CO_2 are steam-stripped and sent to the acid-gas treatment unit. The remaining anhydrous ammonia can be recovered for sale.

Process water runoff goes to a separate storm sewer system and to holding ponds for further treatment. Skimming and aeration will constitute sufficient treatment for this water. Runoff from other areas will flow into the storm sewage system for discharge without treatment.

Cooling water treatment for corrosion reduction will use nonpoisonous compounds such as organic zinc borates and will not use chromates. Cooling tower blowdown will flow to the sewer without further treatment. Sewage will be treated by standard methods to give an effluent of acceptable quality and a biological oxygen demand for discharge to the watershed.

(5) Waste Gases

The SRC process, as designed, employs a modified Claus unit to convert the sulfur in the SO_2-containing flue gases from

the mineral residue fuel boilers, and H_2S from the acid-gas removal section. The quantities of SO_2 and H_2S are in nearly stoichiometric ratio ($2\,H_2S + SO_2 \rightarrow 2\,H_2O + 3\,S$) and therefore no conventional reaction chamber is included in the Claus plant. Two stages of reactors are used, followed by a SCOT tail gas cleanup system. The overall sulfur recovery from the plant is expected to exceed 99 percent of the entering sulfur, with less than 1 percent of the sulfur entering the plant in the coal feed being vented to the atmosphere.

4. COSTS OF POLLUTION CONTROL*

The costs of the pollution control and treatment processes described in Sections 2 and 3 are calculated here. Since the SRC process for producing a syn-coal product is not yet in commercial use, the cost figures used here are estimates of costs for similar pollution control unit processes and from extrapolating SRC process pilot plant data. The major assumptions and conventions adopted here are discussed in Chapter III of this report. All by-product flow rates appearing in Figure IX-1 also apply.

The incremental** capital investment for the control of the potential pollutants discussed in this synopsis is presented in Table IX-8. The incremental annual operating costs appear in Table IX-9.

As a result of incremental costs due to control of pollutants, the incremental capital investment, using utility financing is $15.8 million; using the discounted cash flow (CSF) method, it is $16.8 million. The incremental net operating costs, after taking credit for sulfur recovered at $10/long ton and phenol at 4¢/lb, is $251,800 (i.e., the pollutant treatment facilities show a net annual operating profit).

---

* The costs presented here are preliminary estimates; the actual costs of emission control in this process will not be known until a full-scale facility has been constructed and operated.

** Incremental costs in this report refer to that portion of the total plant cost that is assignable to pollution control facilities.

Table IX-8
Incremental Capital Investment[a]
($ Million)

Item	$ x 10^6	
Incremental plant investment[b]		
Wastewater treatment	3.0	
Claus sulfur recovery with SCOT tail gas treatment	8.4	
Subtotal plant investment	11.4	
Project contingencies[c] (15% of the plant investment)	1.7	
Incremental plant investment (I).	13.1	13.1
Startup costs[d] (20% of incremental gross operating costs)	0.3	0.3
	Utility	DCF
Interest during construction (IDC)[e]	2.2	3.1
Incremental working capital (W)[f]	0.2	0.3
Incremental capital investment (C)	15.8	16.8

Notes:

a Incremental plant investment, return on investment during construction, and working capital are treated as capital costs in year 0 (the year ending with completion of startup operation).

b Installed costs, including engineering design costs, contractors' profit, overhead, and licences with no contingencies.

c Includes costs for unexpected site preparation and hardware requirements at 15% of plant investment.

d At 20% of incremental gross operating cost.

e For the DCF method, computed as the discount rate x incremental Plant Investment for 1.875 years' average construction period. $I(1+i)^n = I(1.12)^{1.875} = 1.236761$ or 0.2367611 additional investment.

f For the utility financing method, computed as the interest rate on debt x incremental plant investment x 1.875 yrs.

Sum of materials and supplies at .9% of incremental plant investment and net receivables at 1/24 of annual incremental revenue.

Table IX-9
Incremental Annual Operating Costs ($)

Item	$/Year	
Direct operating labor (3 men/shift x $5/hr x 8, 304 shift hr/man-yr)	124,600	
Maintenance labor (1.5% of I)	171,000	
Supervision (15% of direct operating and maintenance labor)	44,400	
Incremental labor cost		340,000
Administration and general overhead (60% of incremental labor)		204,000
Other direct costs		400,000
Supplies		
Operating (30% of direct operating labor)	37,400	
Maintenance (1.5% of I)	171,000	
Incremental cost of supplies		208,400
Local taxes and insurance (2.7% of I)		307,800
Incremental gross operating cost		1,460,200
By-product credits		
Sulfur (261.12 short tons/day x 365 days/yr x 0.9 capacity factor x $10/long ton x 2000/2240 long tons/short tons)	765,900	
Phenol (72,000 lb/day x 365 days/yr x 0.9 capacity factor x $0.04/lb)	946,100	
Less by-product credit		-1,712,000
Incremental gross operating cost		
Incremental net operating cost (N)		-251,800

The derivations of the formulae for calculating the incremental cost of the syn-coal produced, due to pollution control, are presented in Chapter III or this report. For the discounted cash flow method, the required incremental annual cost of gas, X, for the assumed rate of return is:

$$X = N + 0.23816I + 0.1275S + 0.230777W$$

where:

N = incremental net operating cost
I = incremental plant investment
S = startup costs
W = incremental working capital.

For the utility financing case, it is:

$$X = N + 0.1198C + 0.0198W$$

where:

C = required incremental capital investment
N and W are as defined above.

Annual syn-coal production, G, for this analysis is:

(488,376 lb/hr) (15,768 Btu/hr) (.9 capacity factor) (24 hrs/day) (365 days/yr) = 60.712 x 10^{12} Btu/yr = 15.300 x 10^{12} kcal/yr

This can be regarded as a typical production rate for a commercial SRC plant. Therefore, the incremental cost of the product syn-coal, due to pollution control is:

$$\frac{\text{annual cost of syn-coal}}{\text{annual syn-coal production}} = \frac{X}{G} = \frac{X}{15.3 \times 10^{12} \text{ kcal/yr}}$$

Solutions to the above equations for the incremental cost of pollution control are shown in Table IX-10. Using the DCF method, the resulting cost is 4.9¢/million Btu (19.4¢/million kcal); using utility financing, it is 2.7¢/million Btu (10.8¢/million kcal).

Table IX-10
Incremental Cost of Solvent Refined Coal Product (SRC) Due to Pollution Control

Accounting Method	Incremental Cost of SRC Product	
	($/yr)	($/$10^6$ Btu)
DCF	2,975,700	0.049
Utility financing	1,645,000	0.027

The fuel gas evolved in the SRC process is consumed in the process as feed for preheater boilers and steam generators. The MEA system, therefore, should be considered as part of the pollution control costs. In some process variations, however, this fuel gas could be used for generation of makeup hydrogen, requiring the MEA system to minimize catalyst poisoning. The relatively minor cost of the MEA system has therefore been omitted from the control costing in this analysis.

The cost of the Wellman-Lord and Allied Chemical processes for independent treatment of the stack gas from the combustion of the mineral residue to product steam were not considered either since these alternatives were not selected by the process developer.

5. REFERENCE

"Economic Evaluation of a Process to Produce Ashless, Low-Sulfur Fuel from Coal," R&D Report No. 53, Interim Report No. 1, Office of Coal Research.

X. THE TEXACO PARTIAL OXIDATION PROCESS

The Texaco partial oxidation process, also known as the Texaco Synthesis Gas Generation process, is designed to convert high sulfur residual oil into synthesis gas or hydrogen. It is licensed by the Texaco Development Corporation, though a competitive process is licensed by the Shell Oil Company.

Development of the Texaco partial oxidation process began in the late 1940's for noncatalytic conversion of methane to synthesis gas. At that time the partial oxidation process was directly competitive with methane-steam reforming, which utilizes catalysts packed in tubes that are externally fired. The versatility of the partial oxidation process has been expanded to include hydrocarbon feeds from methane to light hydrocarbon gases, petroleum distillates, and residuum. Although a solid fueled commercial plant is not yet in operation, Texaco states that the process will accept lignite, bituminous, and anthracite coals.

The process has been accepted throughout the world. In the past, the cost of synthesis gas generated by partial oxidation has been somewhat higher than that of gas produced by steam reforming of methane. However, this situation is expected to change as a result of the availability of natural gas. The capability of partial oxidation plants to accept high sulfur residual feedstocks represents an important advantage.

1. PROCESS DISPLAY

The Texaco partial oxidation process consists of three basic sections:

- The feed system, which delivers controlled amounts of fuel, oxygen, steam and other materials to the generator

- The refractory-lined reactor (gas generator), where fuel reacts with steam and oxygen to produce hydrogen and carbon monoxide in concentrations of 90 to 98 percent; its capacity can vary between 14.2 to 35.4 x 10^3 m^3/hr (0.5 to 1.25 x 10^6 ft^3/hr) of hydrogen equivalent product

- The cooling system that recovers sensible heat contained in the reactor effluent gases.

(1) Bases for Analysis

The flow diagrams for two of the many possible variations for the Texaco partial oxidation process, in synthesis gas and hydrogen production modes, are presented in Figures X-1 and X-2, respectively, along with stream compositions. Note, however, that either process mode can be adapted readily to the production of the other product. The synthesis gas and hydrogen production modes shown in Figures X-1 and X-2 use the same quantities of feedstock; both process variations were included to indicate process versatility. The respective sulfur and energy balances are shown in Tables X-1 and X-2. The feedstock is assumed to be a 6.2 percent sulfur residual fuel oil. The sulfur flow rate is indicated in brackets on the flow diagram for selected streams.

For the producing of synthesis gas, 98.4 percent of the total sulfur in the feed oil is recovered in its elemental form for sale; the remaining 1.6 percent is released to the atmosphere. For the hydrogen generation process mode, 98 percent of the sulfur is recovered for sale and 2 percent is vented to the atmosphere.

The process is discussed in more detail below under the following headings:

- Process description - synthesis gas
- Process description - hydrogen
- Sulfur and energy balances
- Pollution control processes
- Cost of pollution control.

(2) Layout and Symbols

The general direction of the process flow is from the residual feed oil on the left to the cleaned product fuel on the right. This primary conversion stream is indicated by a bold line. All residuals and by-products are shown along the bottom of the flow sheets (inverted trapezoids).

FIGURE X-1
The Texaco Process
Synthesis Gas Production

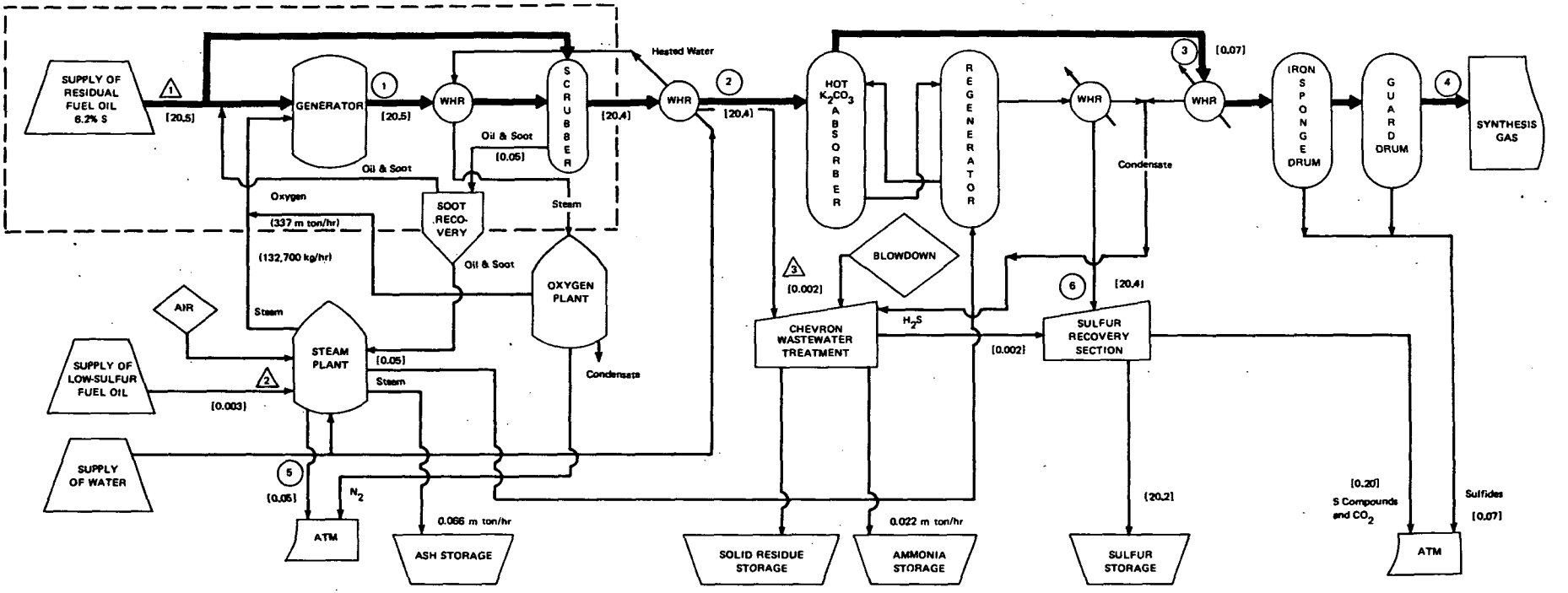

COMPOSITION OF GASEOUS STREAMS (VOL %)						
COMPONENT	1	2	3	4	5	6
H_2	39.49	43.15	45.79	46.52	–	–
CO	44.54	48.66	51.65	52.46	–	–
CO_2	4.34	4.74	0.05	0.05	11.72	69.70
CH_4	0.56	0.61	0.65	0.66	–	–
COS	0.07	0.08	50 ppm	–	–	–
SO_2	–	–	–	–	0.02	–
H_2S	1.30	1.42	10 ppm	–	–	21.84
H_2O	9.53	1.15	1.66	0.11	11.02	8.46
NH_3	28 ppm	–	–	–	–	–
O_2	–	–	–	–	2.59	–
N_2 + A	0.17	0.19	0.20	0.20	74.65	–
FLOW RATE						
m^3/hr X 10^6	1.101	1.008	0.950	0.935	0.148	0.069
ft^3/hr X 10^6	38.89	35.60	33.54	33.02	5.21	2.44

COMPOS. OF LIQUID STREAMS (WT %)				
COMPONENT	1	2	COMPONENT	3
C	83.53	84.00	HC	10 ppm
H	10.02	15.97	COD	5 ppm
S	6.20	0.03	TDS	0.5
N	0.23	–	H_2S	25 ppm
Ash	0.02	–	NH_3	0.03
			Ash	0.1 ppm
FLOW RATE			FLOW RATE	
short ton/hr	364.92	9.05	short ton/hr	80.38
m ton/hr	331.06	8.20	m ton/hr	72.92

Note: [ ] indicates sulfur flow rate, in m tons per hour

LEGEND	
m^3	Cubic meters
S	Sulfur
TDS	Total dissolved solids
COD	Chemical oxygen demand

FIGURE X-2
The Texaco Process
Hydrogen Production

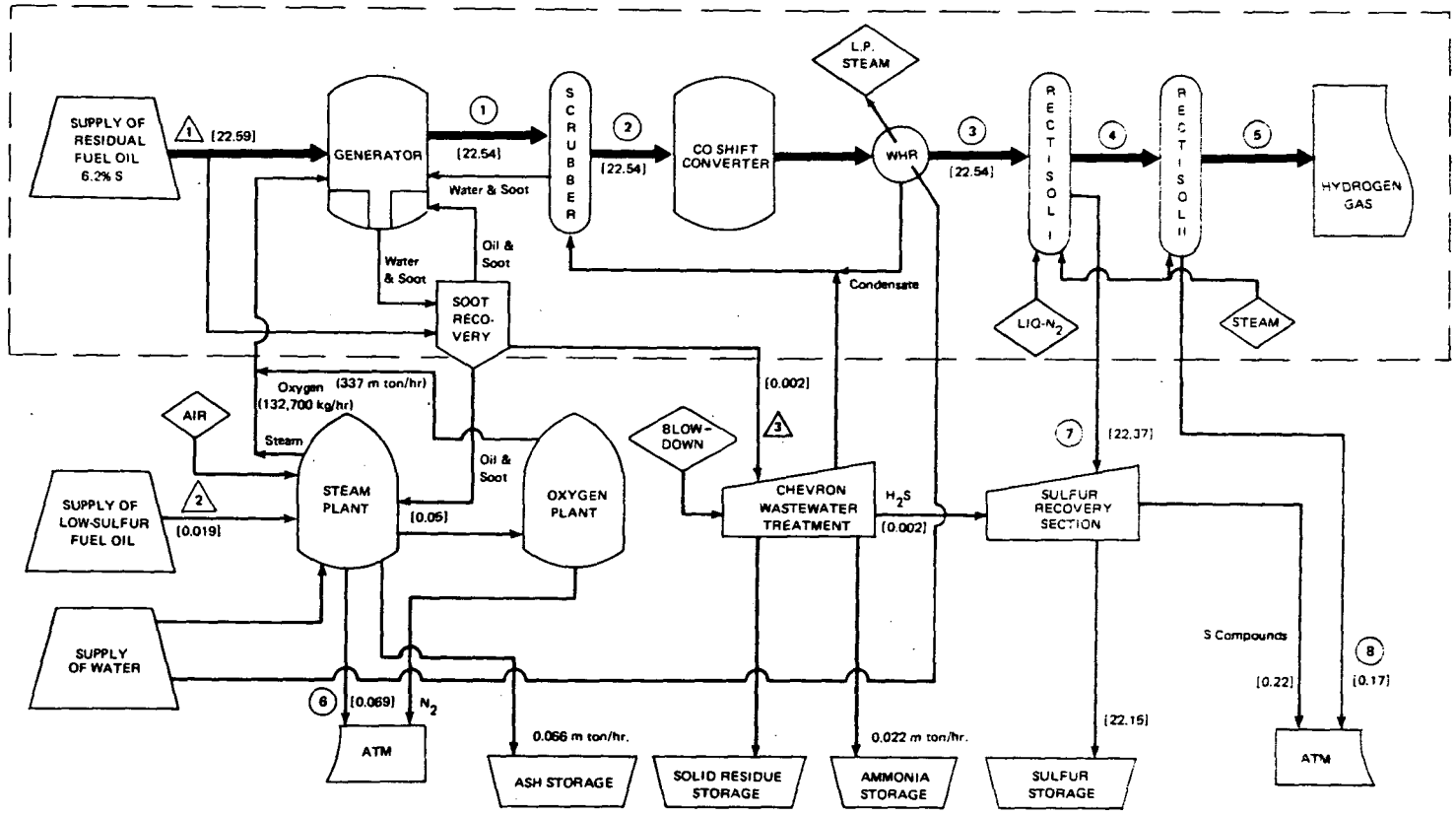

COMPOSITION OF GASEOUS FUELS (VOL %)								
COMPON. / COMPONENT	1	2	3	4	5	6	7	8
H_2	39.49	23.84	61.81	61.42	97.69	–	–	0.20
CO	44.54	26.88	0.95	0.94	1.50			
CO_2	4.34	2.62	35.56	34.08	0.01	12.36	54.42	91.58
CH_4	0.56	0.34	0.42	0.41	0.60	–	–	0.10
COS	0.07	0.04	0.05	0.01	–	–	2.00	0.02
SO_2	–	–	–	–	–	0.042	–	–
H_2S	1.30	0.79	0.97	3 ppm	1 ppm	–	42.05	5 ppm
H_2O	9.53	45.39	0.11	–	–	9.90	–	–
NH_3	28 ppm	–	–	–	–	–	–	–
O_2	–	–	–	–	–	2.60	–	–
N_2 + A	0.17	0.10	0.13	3.14	0.20	75.10	1.53	8.10
FLOW RATE								
$m^3/hr \times 10^6$	1.101	1.825	1.475	1.484	0.932	0.894	0.034	0.552
$ft^3/hr \times 10^6$	38.89	64.43	52.07	52.41	32.91	31.56	1.20	19.50

COMPOS. OF LIQUID STREAMS (WT. %)				
COMPONENT	1	2	COMPONENT	3
C	83.53	84.00	HC	10 ppm
H	10.02	15.97	COD	5 ppm
S	6.20	0.03	TDS	0.5
N	0.23	–	H_2S	25 ppm
Ash	0.02	–	NH_3	0.03
			Ash	0.1 ppm
FLOW RATE			FLOW RATE	
short ton/hr	364.92	63.2	short ton/hr	80.38
m ton/hr	331.06	57.34	m ton/hr	72.92

Note: [ ] indicates sulfur flow rate in m tons per hour

LEGEND	
m tons	Metric tons
TDS	Total dissolved solids
COD	Chemical oxygen demand

Table X-1

Sulfur Balance, Short Tons/Hr (Metric Tons/Hr)

Carrier	Synthesis Gas	Hydrogen
Input	22.593 (20.496)	22.609 (20.51)
Residual fuel oil	22.59 (20.493)	22.59 (20.493)
Low-sulfur oil	.003 (.003)	0.019 (.017)
Output	22.593 (20.496)	22.609 (20.51)
Elemental sulfur	22.24 (20.178)	22.15 (20.09)
Sulfur dioxide to atmosphere	0.053 (0.048)	0.069 (.063)
Sulfur compunds from Claus tail gas to atmosphere	0.22 (0.20)	0.220 (.200)
Sulfides from iron sponge drums vented to atmos. (primarily SO_2)	0.08 (0.07)	0.170 (.154)

The circled figures refer to the gaseous streams while triangles refer to the liquid streams. Their compositions are tabulated beneath each flow sheet. The rhombic-shaped units represent intermediate products and sources for which the distribution is not shown. Nonintegral pollutant cleanup processes are indicated by sloping rectangles. The dashed line encloses that portion of the process defined by the process designer. The remaining unit processes were assumed for this analysis.

2. PROCESS DESCRIPTION - SYNTHESIS GAS

This section describes the specific steps of the Texaco partial oxidation process in a synthesis gas production mode. The pollution control and cleanup processes are similar for the two process modes and are discussed jointly in a subsequent section.

Table X-2
Energy Balance†

Carrier	Heating Value	SYNTHESIS GAS			HYDROGEN		
		Mass Flow Rate	Energy Flow Rate (kcal/hr x 10^6)	Energy Flow Rate (Btu/hr x 10^6)	Mass Flow Rate	Energy Flow Rate (kcal/hr x 10^6)	Energy Flow Rate (Btu/hr x 10^6)
Input							
Residual fuel oil	10,000 kcal/kg	331,060 kg/hr	3,397 / 3,310	13,480 / 13,134	331,060 kg/hr	3,916 / 3,310	15,539 / 13,134
Low-sulfur oil	10,560 kcal/kg	8,210 kg/hr	87	346	57,330 kg/hr	606	2,405
			3,397	13,480		3,916	15,539
Output							
Synthesis gas	2,903 kcal/m^3	0.935 x $10^6 m^3$/hr	2,714	10,770	—	—	—
Hydrogen	2,913 kcal/m^3	—	—	—	0.932 x $10^6 m^3$/hr	2,715	10,773
Sulfur	2,213 kcal/m^3	20,176 kg/hr	45	178	20,090 kg/hr	44	175
Ammonia	5,375 kcal/kg	22 kg/hr	.118	0.467	22 kg/hr	.118	0.467
Cooling water	19.5 kcal/l	11 x 10^6 l/hr	213	847	11 x 10^6 l/hr	213	847
Steam	647 kcal/kg	—	—	—	213,190 kg/hr	138	547
Other (by difference)*	—	—	424.88	1684.5	—	805.88	3196.5

† For Synthesis gas mode, the overall efficiency is 81.2% and 70.5% for the hydrogen mode.

*Includes heating values of other products, sensible heat of product streams, and heat lost directly to the atmosphere.

(1) Generation

Most of the feed oil, plus soot-laden oil returned from the scrubber located downstream of the generators, enters the generator burners, along with oxygen and steam; a portion of the feed oil is directed to the downstream scrubber. All of these inputs are preheated to minimize oxygen consumption. The oxygen and feed oil streams are not premixed to avoid problems with flow distribution, flash-backs, preheat, and pressure limits. Pressures in the generator may range from near-atmospheric to 86 kg/cm^2 (1200 psig), while maximum temperatures are limited by steam injection to between 1100 to 1600 degrees C (2000 to 2800 degrees F).

The hot raw output gas contains mainly carbon monoxide and hydrogen and small amounts of carbon dioxide, as well as methane, carbonyl sulfide, hydrogen sulfide, nitrogen, argon, and soot impurities.

(2) Scrubbing and Soot Recovery

The hot gas stream from the generator is cooled by passage through a waste heat recovery (WHR) section, where it raises steam to drive the air separations plant. The gas is then scrubbed with a portion of the feed oil to remove the soot, before continuing on to the purification stage.

The soot-laden oil is separated in the soot recovery unit into two fractions to maintain a steady-state removal of ash from the system.* This process mode has employed oil-washing of the soot (although the washing mode has not been commercially utilized). Texaco uses water-washing as presented in the alternate production mode. The smaller, soot-rich fraction serves as fuel for the steam plant, while the cleaner fraction is returned to the gas generator for further processing.

(3) Purification

The purification stage that follows is proposed for purposes of this analysis, and is not a part of the Texaco process as

* The process licensor claims that this flow scheme is not necessary to eliminate ash from the system.

conceived by the developers. A hot carbonate process can be used to treat the high H_2S/CO_2 ratio in this feed gas and also minimize COS emissions. The gas stream from the oil scrubbers flows through a low temperature waste heat recovery section to condense out moisture and to preheat boiler feed water for the steam plant. The gas is then scrubbed at 93 to 105 degrees C (200 to 220 degrees F) in a hot potassium carbonate absorber to remove carbon dioxide and hydrogen sulfide and to hydrolyze much of the carbonyl sulfide present. The scrubbed gas is again cooled to condense out any remaining moisture, and then passed through two iron sponge beds, to remove final traces of sulfur.

The hot potassium carbonate solution is regenerated with low pressure steam and the regenerator effluent gas is directed to the sulfur recovery section. The sulfur retained by the iron sponge beds is vented to the atmosphere during periodic regeneration. The synthesis gas product is free of sulfur and contains approximately 52.5 percent carbon monoxide and 46.5 percent hydrogen.

(4) Steam and Oxygen Generation

The overall steam requirements of the process—generator steam and O_2 separation—can be met, in part, by the first waste heat boiler. An additional oil-fired steam generator would supply the remainder. Fuel for the steam generator consists of the soot-laden oil from the soot recovery section, with enough low-sulfur fuel oil added to maintain stack gas emissions at 0.5 lb SO_2/million Btu of fuel burned or 0.9 kg/10^6 kcal (equivalent to 0.4 percent sulfur in the fuel oil).

An air separation plant powered by steam from the first waste heat recovery section serves as a source of oxygen for the synthesis gas generator.

3. PROCESS DESCRIPTION - HYDROGEN

This section describes the Texaco partial oxidation process in the hydrogen production mode. Some of the step descriptions are similar to those for synthesis gas production and are not repeated here.

(1) Generation

This generation step essentially duplicates that for synthesis gas production. The major distinction lies in the provision of a water scrubber in the lower portion of the generator vessel.

(2) Scrubbing and Soot Recovery

The hot gas stream from the gas generator is scrubbed in two consecutive water scrubbers, where it picks up sufficient moisture to feed the subsequent CO-shift reaction.

The soot-laden slurry from the first scrubber, located in the lower portion of the generator vessel, flows to the soot recovery unit, where it is scrubbed by naphtha to extract the soot. The water is then directed to the wastewater treatment unit and eventually recycled to the second scrubber. The soot-laden naphtha is mixed with feed oil and distilled to yield naphtha and soot-laden feed oil separately. The latter is separated into two fractions, as in the synthesis gas production mode. The soot-rich fraction serves as fuel for the steam plant, while the remaining fraction is returned to the gas generator for further processing. This soot recovery scheme is alternative to the oil washing presented in the other mode.

Water for the second scrubber is fed from the wastewater treatment stage and condensate from the waste heat recovery boiler on the CO-shift effluent. Its wastewater serves as the water feed for the first scrubber.

(3) CO-Shift Conversion

The shift conversion step increases the H_2/CO ratio from 0.9 to 65. It takes place with the aid of a cobalt-molybdenum catalyst, which is more effective than conventional iron oxide catalysts in the presence of sulfur. The effluent gas stream is cooled by passage through a waste heat recovery (WHR) unit that generates low pressure steam. The moisture condenses out and serves as partial feed for the second scrubber.

(4) Purification

In this presentation of the Texaco process, removal of carbon dioxide and hydrogen sulfide impurities can be achieved by means of two Rectisol process stages. The product hydrogen stream contains 97 to 98 percent hydrogen, 1 to 2 percent carbon monoxide, and only very minor carbon dioxide and hydrogen sulfide impurities. The Rectisol system consists of a refrigeration section that cools the gas to -20 to -60 degrees C (0 to -80 degrees F), a methanol absorber and a section that regenerates the methanol.

4. POLLUTION CONTROL PROCESSES

The nature and treatment of major waste streams is presented in Table X-3 and discussed briefly below. A more complete discussion of the specific processes introduced here is given in Chapter III.

Table X-3
Nature and Treatment of Major Waste Streams

Waste	Sources	Treatment
Hydrogen sulfide	Regeneration of acid-gas absorbers Wastewater treatment Beavon tail gas	Claus and Beavon Claus and Beavon None required
Sulfur dioxide	Steam plant Regeneration of iron sponge	None required None required
Carbonyl sulfide	Regeneration of Rectisol II	None required
Wastewater	Soot recovery Gas condensates Boiler and cooling tower blowdown	Chevron and biological
Ash	Steam plant	None required
Solid sludge	Wastewater treatment	Oxidation
Iron sponge	Iron sponge drum	Oxidation
CO shift catalyst	Shift converter	Oxidation

(1) Gaseous Wastes

The hydrogen sulfide in the effluent streams from the acid-gas removal processes is converted to liquid sulfur in the sulfur recovery section consisting of a Claus plant and a Beavon unit to process the Claus tail gas, before it is vented to the atmosphere. Approximately 99 percent of the incoming sulfur is recovered.

Sulfur dioxide emissions from combustion of the mixture of soot-laden feed oil and low sulfur fuel oil are considered too small to require treatment under current standards. The effluent stream of the Rectisol II stage also contains low concentrations of sulfur; however, much of that sulfur is in the reduced form. Incineration of this stream would probably require excessive fuel consumption due to the quantity of CO_2 present.

(2) Liquid Wastes

Wastewater from the soot recovery unit in the hydrogen production mode of the process, as well as gas condensates and blowdown water from steam generators and cooling towers, are treated in the wastewater treatment plant. The plant includes a Chevron unit and a biological treatment unit and yields an inert solid residue and small amounts of ammonia and hydrogen sulfide gases. The latter is treated by the sulfur recovery section.

(3) Solid Wastes

Because the feedstock is residual fuel oil, generation of ash is minimal. The ash is eventually rejected by the steam plant and can be used as landfill or sold to metal processors for recovery of vanadium and nickel. The solid sludge from the wastewater treatment plant requires oxidation prior to landfilling. The spent CO shift catalyst and iron sponge should be fully oxidized prior to removal to neutralize their pyrophoric properties.

5. COSTS OF POLLUTION CONTROL*

The costs of the pollution control and treatment processes described in Sections 2, 3 and 4 of this synopsis are calculated here using both a utility financing and a discounted cash flow accounting method (DCF). The major assumptions and conventions adopted here are discussed in Chapter III of this report. All by-product flow rate data presented in Figures X-1 and X-2 also apply.

The incremental** capital and operating costs for pollution controls for the Texaco partial oxidation process are reported for the two cases considered above: production of synthesis gas and production of hydrogen.

Capital investment requirements are shown in Tables X-4 and X-5. Using the utility financing method, the capital investment required for pollution control is $16.0 million and $12.7 million, for producing synthesis gas and hydrogen respectively. Using the DCF method, it is $17.1 million and $13.4 million. Tables X-6 and X-7 present calculations of the annual operating costs for both product streams. For synthesis gas production, an additional $22,300 per year is required for pollution control while a net savings of $172,000 is expected when producing hydrogen.

The derivations of the formulae for calculating the incremental cost of gas production due to pollution control are presented in Chapter III of this report. For the DCF method, the required incremental annual cost of gas, X, for the assumed rate of return is:

$$X = N + 0.23816I + 0.1275S + 0.230777W$$

---

* The costs presented here are preliminary estimates; the actual costs of emission control in this process will not be known until a full-scale facility has been constructed and operated.

** Incremental costs in this report refer to that portion of the total plant cost that is assignable to pollution control facilities.

Table X-4
Incremental Capital Investment[a] ($Million)
For Synthesis Gas Production
(For 6.2% Sulfur in Residual Oil Feedstock)

Item	$ Million	
Incremental plant investment[b]		
Wastewater treatment	3.0	
Claus sulfur recovery with tail gas treatment	8.6	
	11.6	
Project contingencies[c] (15% of the plant investment)	1.7	
Incremental plant investment (I)	13.3	13.3
Startup costs[d] (20% of incremental gross operating cost)	0.3	0.3
	Utility	DCF
Interest during construction[2] (IDC)	2.2	3.2
Incremental working capital (W)	.2	.3
Incremental capital investment (C)	16.0	17.1

Notes:

a Incremental plant investment, return on investment during construction, and working capital are treated as capital costs in year 0 (the year ending with completion of startup operation).

b Installed costs, including engineering design costs, contractors' profit, overhead, and licenses with no contingencies.

c Includes costs for unexpected site preparation and hardware requirements at 15% of plant investment.

d At 20% of incremental gross operating cost.

e For the DCF method, computed as the discount rate x incremental plant investment for 1.875 years' average construction period. $I(1+i)^n = 1.12)^{1.875} = 1.23676I$ additional investment.

For the utility financing method, computed as the interest rate on debt x incremental plant investment x 1.875 yrs.

f Sum of materials and supplies at .9% of incremental plant investment and net receivables at 1/24 of annual incremental revenue.

Table X-5
Incremental Capital Investment[a] ($ Million)
For Hydrogen Production
(For 6.2% Sulfur in Residual Oil Feedstock)

Item	$ Million	
Incremental plant investment[b]		
Wastewater treatment	3.0	
Claus sulfur recovery with tail gas treatment	6.0	
Subtotal plant investment	9.0	
Project contingencies[c] (15% of the plant investment)	1.4	
Incremental plant investment (I)	10.4	10.4
Startup costs[d] (S) (20% of incremental gross operating cost)	0.3	0.3
	Utility	DCF
Interest during construction[e] (IDC)	1.8	2.5
Incremental working capital[f] (W)	.2	.2
Incremental capital investment (C)	12.7	13.4

Notes:

a Incremental plant investment, return on investment during construction, and working capital are treated as capital costs in year 0 (the year ending with completion of startup operation).

b Installed costs, including engineering design costs, contractors' profit, overhead, and licenses with no contingencies.

c Includes costs for unexpected site preparation and hardware requirements at 15% of plant investment.

d At 20% of incremental gross operating cost.

e For the DCF method, computed as the discount rate x incremental plant investment for 1.875 years' average construction period.
$I(1+i)^n = I(1.12)^{1.875} = 1.23676I$ additional investment.

f. Sum of materials and supplies at .9% of incremental plant investment and net receivables at 1/24 of annual incremental revenue.

Table X-6
Incremental Annual Operating Costs of
Synthesis Gas Production

Item	$/Year	
Direct operating labor (3 men/shift x $5/hr x 8,304 shift hr/man-year)	124,600	
Maintenance labor (1.5% of I)	199,500	
Supervision (15% of indirect operating and maintenance labor)	48,600	
Incremental labor cost		372,700
Administration and general overhead (60% of incremental labor)		223,600
Other direct costs*		400,000
Supplies		
Operating (30% of direct operating labor)	37,400	
Maintenance (1.5% of I)	199,500	
Incremental cost of supplies		236,900
Local taxes and insurance (2.7% of I)		359,100
Additional cost of fuel by using naphtha rather than resid (64.6 bbl x $3 diff/bbl)		200
Incremental gross operating cost		1,592,500
By-product credits		
Sulfur (533.76 short tons/day x 365 days/year x .9 capacity factor x $10/long ton x 2000/2400 long tons/short tons)		1,565,500
Ammonia (.576 short tons/day x 365 days/year x .9 capacity factor x $25/short ton)		4,700
Total by-product credit		1,570,200
Incremental gross operating cost		1,592,500
Less by-product credits		-1,570,200
Incremental net operating cost (N)		22,300

*This item includes incremental costs of chemicals, catalysts and make-up water

Table X-7
Incremental Annual Operating Costs of Hydrogen Production

Item		$/Year
Direct operating labor (3 men/shift x $5/hr x 8,304 shift hr/man-yr)	124,600	
Maintenance labor (1.5% of I)	156,000	
Supervision (15% of indirect operating and maintenance labor)	42,100	
Incremental Labor Cost		322,700
Administration and general overhead (60% of incremental labor)		193,600
Other direct costs*		400,000
Supplies		
Operating (30% of direct operating labor)	37,400	
Maintenance (1.5% of I)	156,000	
Incremental cost of supplies		193,400
Local taxes and insurance (2.7% of I)		280,800
Additional cost of fuel by using naphtha rather than resid (451 bbl x $3 diff/bbl)		1,400
Incremental gross operating cost		1,391,900
By-product credits		
Sulfur (531.6 short tons/day x 365 days/yr x .9 capacity factor x $10/long ton x 2000/2240 long tons/short tons)		1,559,200
Ammonia (.576 short tons/day x 365 days/yr x .9 capacity factor x $25/short ton)		4,700
Total by-product credit		1,563,900
Incremental gross operating cost		1,391,900
Less by-product credits		-1,563,900
Incremental net operating cost (N)		-172,000**

*This item includes incremental costs of chemicals, catalysts and make-up water
**By-product credits exceed operating costs and result in a net annual operating profit

where

N = incremental net operating cost
I = incremental plant investment
S = startup costs
W = incremental working capital.

For the utility financing case, the appropriate formula is:

$$X = N + 0.1198C + 0.0198W$$

where

C = required incremental capital investment
N and W are as defined above.

Solutions to the above equations for the incremental cost of gas are shown on Tables X-8 and X-9.

For the DCF method, the incremental cost of gas is 3.9¢/10^6 Btu for synthesis gas production and 2.8¢/10^6 Btu for hydrogen production. For the utility financing case, these costs are 2.3¢ and 1.6¢, respectively. Though the operating costs for hydrogen versus synthesis gas production are somewhat lower, the difference is not significant. The production of synthesis gas appears the more expensive process primarily due to the additional capital cost of sulfur recovery required (see Tables X-4 and X-5).

6. REFERENCES

Schlinger, W.G., and Slater, W.L., "Application of the Texaco Synthesis Gas Generation Process Using High Sulfur Residual Oils as Feedstocks," Texaco, Inc., Montebello Research Laboratory, Montebello, California.

Table X-8
Incremental Cost of Synthesis Gas Production
Due to Pollution Control
(6.2% Sulfur in Residual Oil Feedstock)

Accounting Method	Cost of Gas	
	($/yr)	($/$10^6$ Btu)
DCF	3,297,000	.039
Utility financing	1,943,100	.023

Table X-9
Incremental Cost of Hydrogen Production
Due to Pollution Control
(6.2% Sulfur in Residual Oil Feedstock)

Accounting Method	Cost of Gas	
	($/yr)	($/$10^6$ Btu)
DCF	2,389,400	.028
Utility financing	1,353,500	.016

XI. THE DESULFURIZATION OF CRUDE OIL

Until about 1950, desulfurization in petroleum refining was directed primarily at the reduction of sulfur in light products such as gasoline, naphtha, and kerosene. In the case of gasoline, desulfurization improved the product odor and achieved better tetraethyl lead susceptibility, therefore reducing the cost of producing gasoline and increasing customer acceptance. Some chemical treatment methods, such as sulfuric acid washing, improved product appearance and stability and also reduced sulfur content to some extent. At that time, the sulfur compounds of primary concern were the foul-smelling mercaptans (compounds analogous to alcohols and phenols which contain sulfur in place of oxygen). Several processes were used to convert these mercaptans to disulfides which had a more acceptable odor. Although the total sulfur content of the oil remained the same, it was now more marketable. Some selective solution processes were also developed to remove mercaptans. During this period, only the simplest forms of catalytic desulfurization were used. A typical catalytic process would contact vaporized oil with a fixed bed of bauxite. Part of the sulfur was converted to H_2S which was removed by caustic washing or distillation.

In 1948, the first commercial platinum catalyst reforming process was put into commercial operation. This was the Platforming process, developed by the Universal Oil Products Co. By 1950, catalytic reforming was accepted throughout the refining industry and was being rapidly installed.

The purpose of catalytic reforming was to increase the octane rating of gasoline and naptha. The main reactions occurring in this process are dehydrogenation of aromatics (hydrocarbons with at least one benzene ring, C_6H_6), dehydrocyclization of paraffins to form aromatics (breaking down heavier hydrocarbons to aromatics), isomerization (formation of isomers) and hydrocracking. As a net result of these reactions, an excess of hydrogen-rich gas is formed which must be vented from the process. When catalytic reforming is installed only for increasing octane number, the hydrogen-rich off-gas is produced at fuel gas value. With the availability of cheap hydrogen from catalytic reforming came the first stirring of wide interest in hydrodesulfurization (HDS) processing.

In some refineries, this excess hydrogen was used in processes such as the Hydrobon process. Feedstocks intended for catalytic reforming were first processed through a Hydrobon unit to reduce the sulfur content to low levels and also to reduce the content of nitrogen compounds. Both sulfur and nitrogen acted as poisons to the catalytic reforming catalyst. In addition to catalytic reformer feedstock treatment, excess hydrogen was used to upgrade kerosene and jet fuel, lubricating oils, waxes, fuel oils, and most recently, residual stocks. As the scope of hydrotreatment expanded, other sources of hydrogen were needed to supplement hydrogen from reforming.

1. PROCESS DISPLAYS

Five process flow diagrams for different desulfurization schemes are presented in Figure XI-1 and discussed in Section 2. The desulfurized oil's sulfur content decreases, in general, as process complexity and costs increase. The zone contained within the dashed lines represents the desulfurization processes considered in this study. The plant sulfur balance for each scheme is also presented on the process flow diagrams.

(1) Bases for Analysis

It should be emphasized that no two refineries are identical. The flow rates and compositions presented in this study are for a hypothetical plant. They are the result of a particular combination of feedstock, processing operations and product mix selected for this analysis. Care must be exercised and allowances made when attempting to use this data for variant applications.

Assumptions made in preparing the desulfurization flow sheets include:

- Crude oil feed rate of 100,000 bbl/day. This size was selected since present refinery economics dictate large throughputs; the other processes discussed in this study reach a cost plateau at lower energy input rates. This feed rate, on an energy basis, is about 50 percent higher than the coal-based processes discussed in other clean-fuel evaluations. Energy output rates are also about doubled. The costs presented in Section 4 are,

FIGURE XI-1, Case 1
Desulfurization of Crude Oil

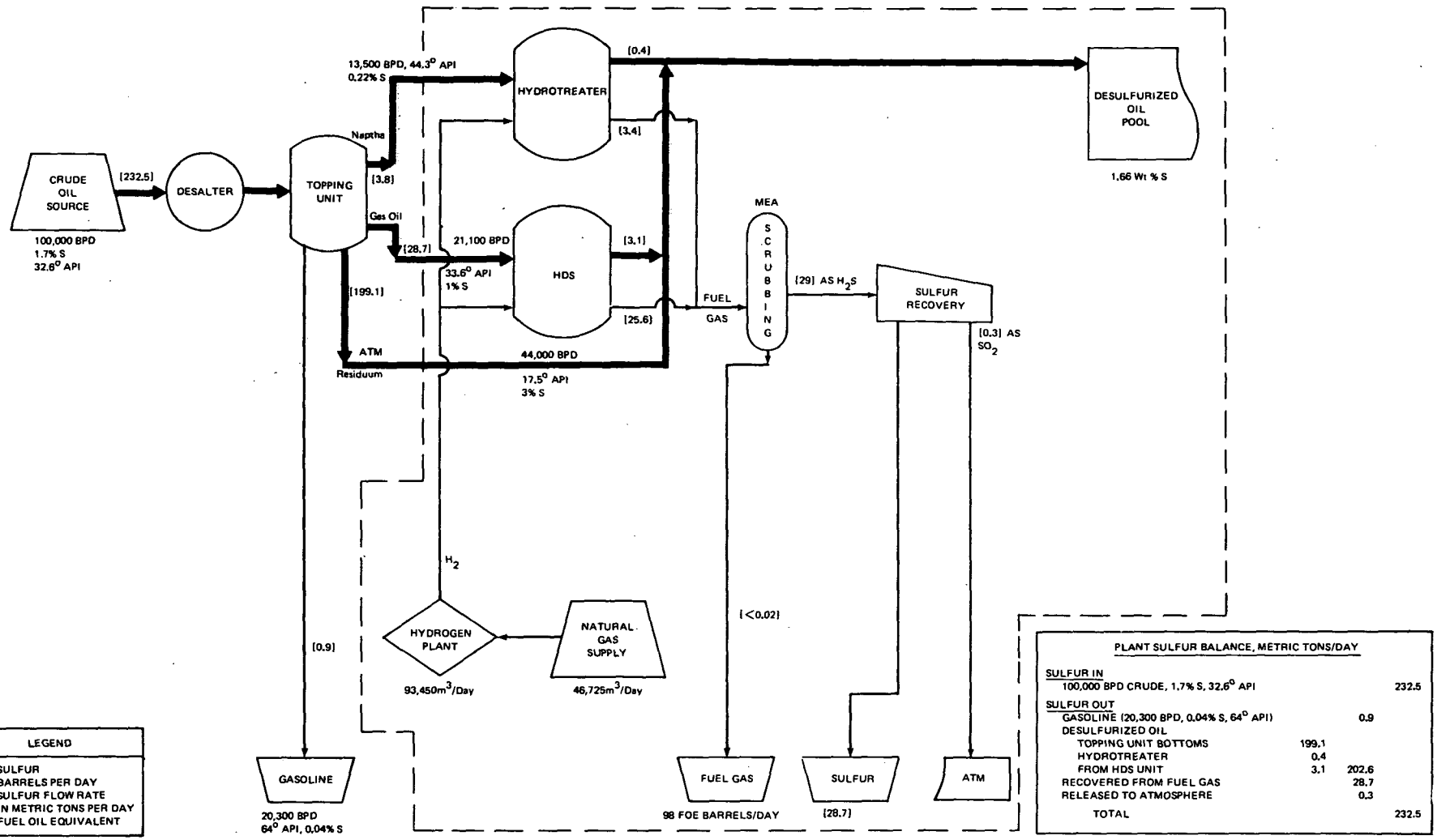

LEGEND	
S	SULFUR
BPD	BARRELS PER DAY
[ ]	SULFUR FLOW RATE IN METRIC TONS PER DAY
FOE	FUEL OIL EQUIVALENT

PLANT SULFUR BALANCE, METRIC TONS/DAY

SULFUR IN			
100,000 BPD CRUDE, 1.7% S, 32.6° API			232.5
SULFUR OUT			
GASOLINE (20,300 BPD, 0.04% S, 64° API)		0.9	
DESULFURIZED OIL			
TOPPING UNIT BOTTOMS	199.1		
HYDROTREATER	0.4		
FROM HDS UNIT	3.1	202.6	
RECOVERED FROM FUEL GAS		28.7	
RELEASED TO ATMOSPHERE		0.3	
TOTAL			232.5

FIGURE XI-1, Case 2
Desulfurization of Crude Oil

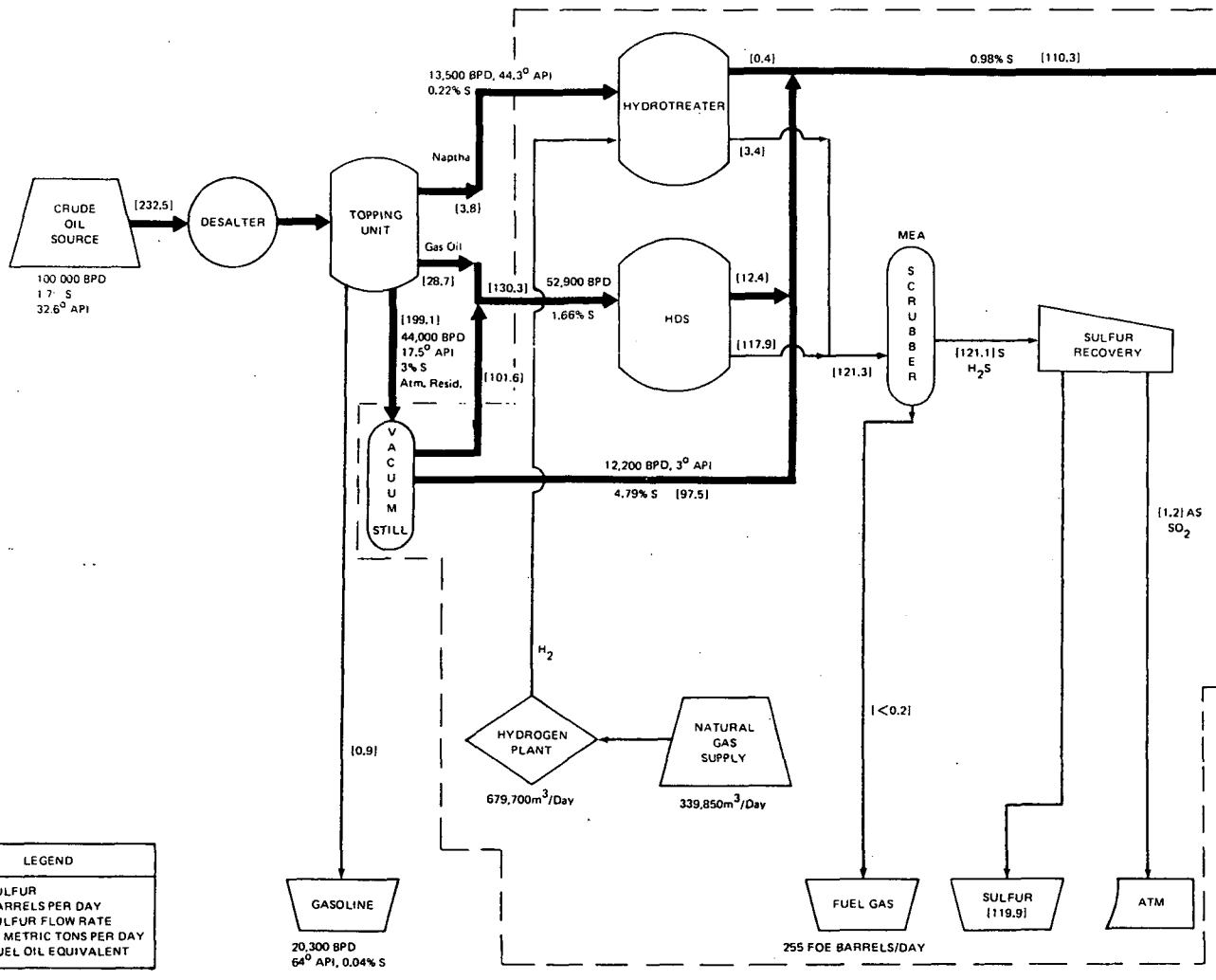

LEGEND	
S	SULFUR
BPD	BARRELS PER DAY
[ ]	SULFUR FLOW RATE IN METRIC TONS PER DAY
FOE	FUEL OIL EQUIVALENT

PLANT SULFUR BALANCE, METRIC TONS/DAY

SULFUR IN			
100,000 BPD CRUDE, 1.7% S, 32.6° API			232.5
SULFUR OUT			
GASOLINE (20,300 BPD, 0.04% S, 64° API)		0.9	
DESULFURIZED OIL			
VACUUM STILL BOTTOMS	97.5		
FROM HYDROTREATER	0.4		
FROM HDS UNIT	12.4	110.3	
RECOVERED FROM FUEL GAS		119.9	
REMAINING IN FUEL GAS		0.2	
RELEASED TO ATMOSPHERE		1.2	
TOTAL			232.5

FIGURE XI-1, Case 3
Desulfurization of Crude Oil

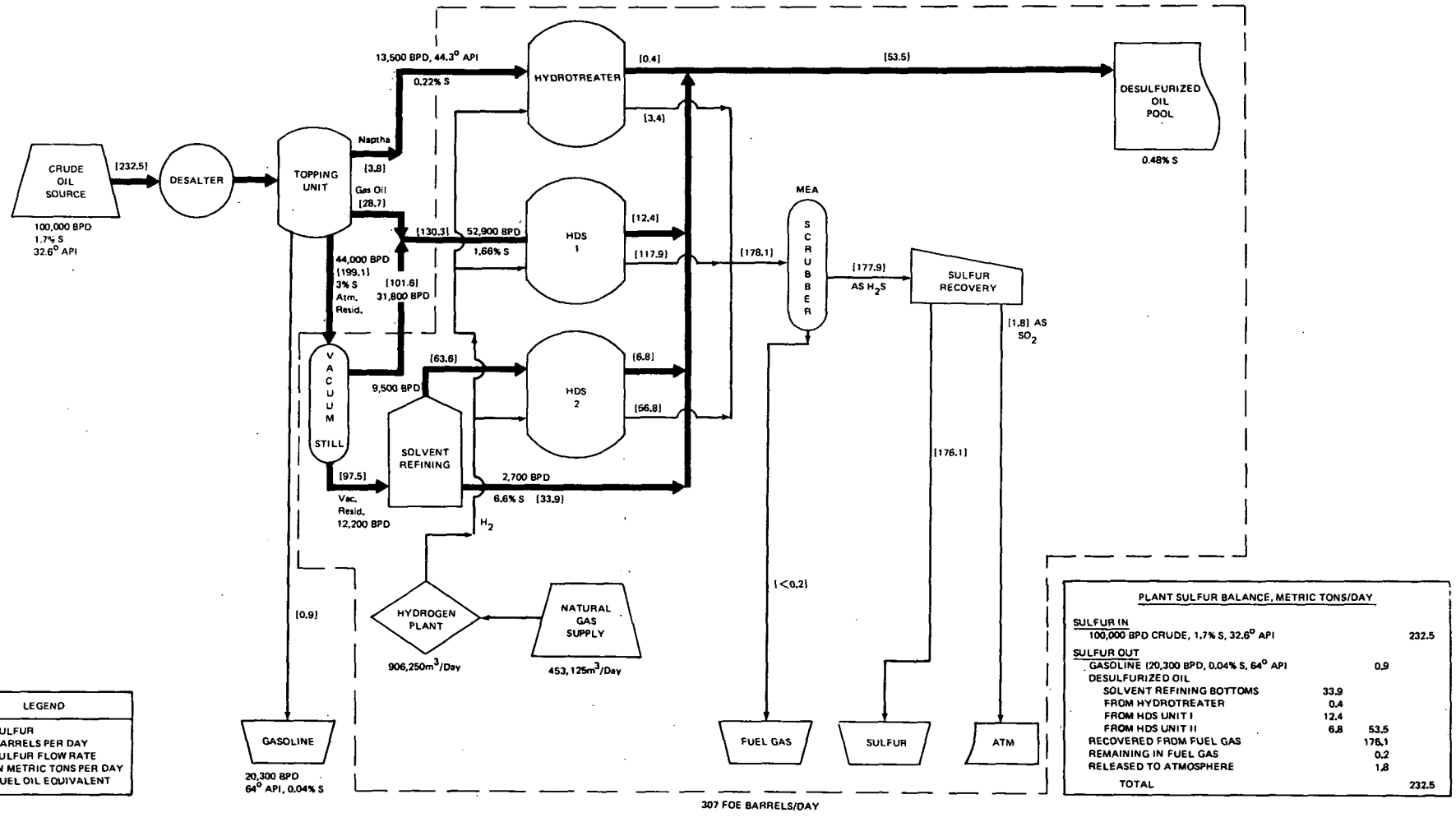

PLANT SULFUR BALANCE, METRIC TONS/DAY

SULFUR IN			
100,000 BPD CRUDE, 1.7% S, 32.6° API			232.5
SULFUR OUT			
GASOLINE (20,300 BPD, 0.04% S, 64° API		0.9	
DESULFURIZED OIL			
SOLVENT REFINING BOTTOMS	33.9		
FROM HYDROTREATER	0.4		
FROM HDS UNIT I	12.4		
FROM HDS UNIT II	6.8	53.5	
RECOVERED FROM FUEL GAS		176.1	
REMAINING IN FUEL GAS		0.2	
RELEASED TO ATMOSPHERE		1.8	
TOTAL			232.5

FIGURE XI-1, Case 3A
Desulfurization of Crude Oil

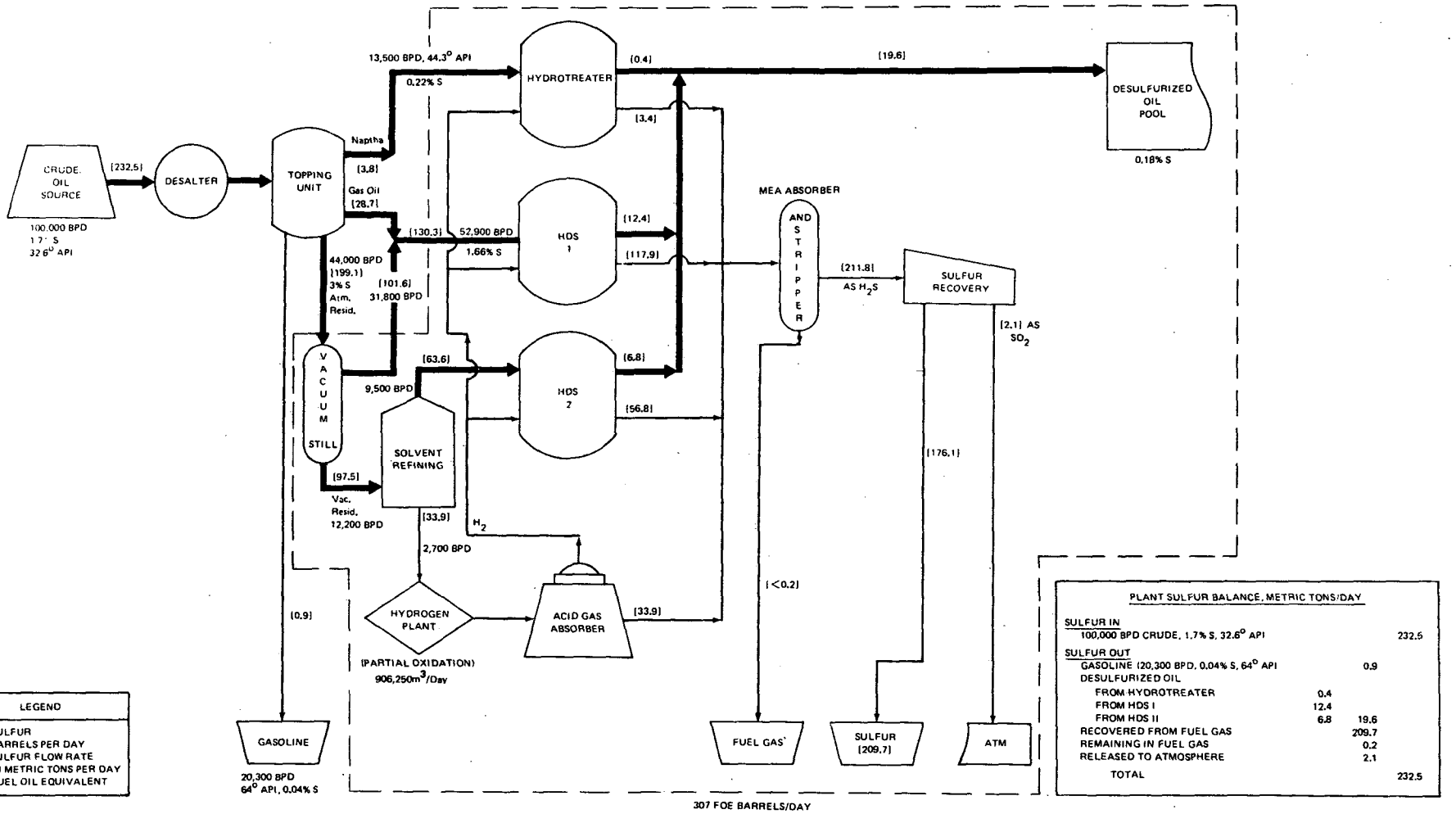

FIGURE XI-1, Case 4
Desulfurization of Crude Oil

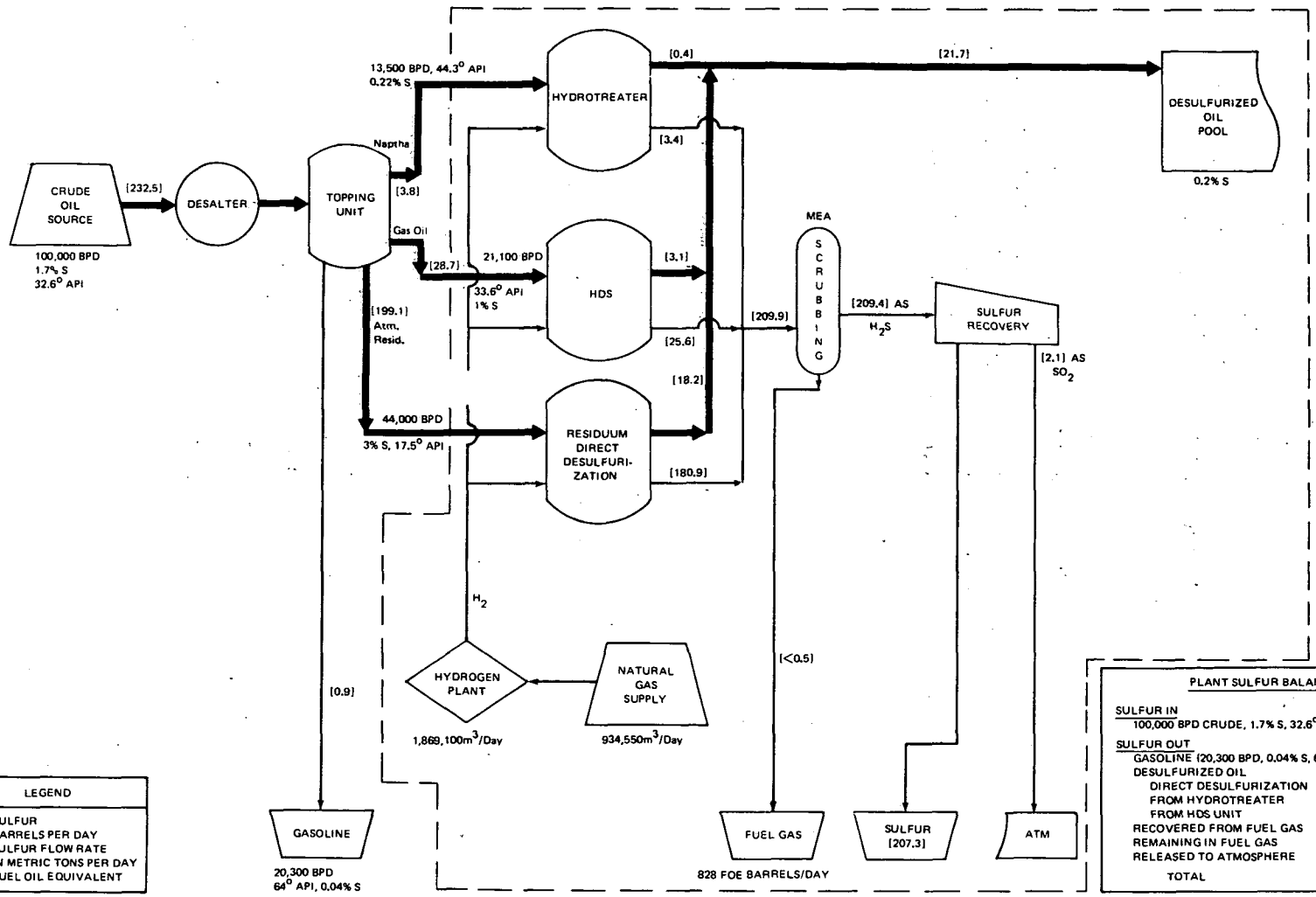

LEGEND	
S	SULFUR
BPD	BARRELS PER DAY
[ ]	SULFUR FLOW RATE IN METRIC TONS PER DAY
FOE	FUEL OIL EQUIVALENT

PLANT SULFUR BALANCE, METRIC TONS/DAY

SULFUR IN			
100,000 BPD CRUDE, 1.7% S, 32.6° API			232.5
SULFUR OUT			
GASOLINE (20,300 BPD, 0.04% S, 64° API)		0.9	
DESULFURIZED OIL			
DIRECT DESULFURIZATION	18.2		
FROM HYDROTREATER	0.4		
FROM HDS UNIT	3.1	21.7	
RECOVERED FROM FUEL GAS		207.3	
REMAINING IN FUEL GAS		0.5	
RELEASED TO ATMOSPHERE		2.1	
TOTAL			232.5

therefore, not strictly comparable to the other process evaluations when viewed on a unit-to-unit basis.

- A crude oil containing 1.7 percent by weight of sulfur, gravity of 32.6 degrees API was selected. This type of crude oil is representative of a moderately high sulfur content crude of a type which may be obtained from the Persian Gulf or from many wells in the United States.

- It was assumed that the desulfurization was incremental to an existing refinery which had excess crude oil processing capacity. Therefore, the problems of wastes which are associated with the main cooling water system, steam boiler system, or the main wastewater treatment system have not been considered.

(2) Layout and Symbols

The general direction of process flow is from the crude oil feed on the left to the desulfurized oil on the right, with residuals shown along the bottom (denoted by inverted trapezoids). The bold lines indicate the primary oil flow. Rhombic-shaped units represent intermediate products, uses, and sources, for which the distribution is not shown. Nonintegral pollutant cleanup processes are indicated by sloping rectangles.

2. PROCESS DESCRIPTION

The crude oil is desalted (removal of soluble sodium, calcium and magnesium salts) and fractionated in an atmospheric still where the most volatile fraction, gasoline, is extracted. The 149 degrees C (300 degrees F) and lighter material bypasses the desulfurization process and is blended into the refinery gasoline pool. The gasoline contains only 0.04 percent sulfur. The remaining 79.7 percent of the crude oil is separated into various fractions and hydrodesulfurized. The desulfurized oil products from these fractions are combined

with the residuum and identified as "desulfurized oil." This is not a specification fuel oil product. The desulfurized oil represents a low sulfur oil pool from which a variety of low sulfur distillates or fuel oils may be derived by distillation or blending. Products separated from the low sulfur oil may include gasoline, which was formed in small amounts during hydrodesulfurization, kerosene and jet fuel, light fuel oil containing very low sulfur, and higher sulfur heavy fuel oil which might be blended with residuum. No attempt has been made to identify the specific products and rates of production since these change with refinery location, markets, and time.

Table XI-1 contains a listing of currently available hydrodesulfurization processes. Different processes are applied to different boiling ranges of oils. Lower boiling oils normally contain less sulfur than higher boiling materials from the same crude oil. The sulfur in the lighter oils exists in the forms that are more easily treated. The lower boiling oils can be desulfurized more easily at lower pressures, lower temperatures, and at higher catalyst space velocities (volume of oil per hour per volume of catalyst). The most difficult hydrodesulfurization feedstocks are residual: the oils which cannot be distilled in atmospheric or vacuum towers. Vacuum residuum usually has a boiling range of 538°C (1000°F) and higher. Residual hydrodesulfurization is more difficult than distillate desulfurization because the stocks are dirtier and the molecular structure is more complex. Non-distillable impurities are contained in crude oil concentrate in the residuum and must be handled by the hydrodesulfurization process. Unfortunately, these impurities tend to plug the catalyst beds and may irreversibly poison the catalyst. The heavy residuum oil tends to deposit carbon on the catalyst, reducing its activity. Finally, the residuum stocks often have a higher demand for hydrogen than the distillates, and the cost of hydrogen is of major importance for good hydrodesulfurization economies.

Normal sources of hydrogen for petroleum refineries have been by-product hydrogen from catalytic reforming or by-product hydrogen from petrochemical processes such as ethylene-cracking. More recently, steam reforming units for natural gas or refinery gas have been installed to manufacture the hydrogen. In refineries where an excess of naphtha may be available (mainly foreign refineries), naphtha-steam reforming has been used to manufacture hydrogen. The Texaco and Shell partial oxidation processes can use almost any type of liquid hydrocarbon feed. The versatility of partial oxidation insures that it will be more widely used in the future.

Table XI-1
Important Hydrodesulfurization Processes

Licensor	Process	Scope of Application
Chevron Research Co.	VGO Isomax	Vacuum gas oil and lighter feedstocks
	RDS Isomax	Whole crude, vacuum gas oil, and vacuum tower bottoms
	VRDS Isomax	Vacuum tower residuum
Cities Service R&D Co. and Hydrocarbon Research Inc.	H-Oil	Residual oil
ESSO Research & Engineering Co. and Union Oil of California	Go-Fining	High boiling virgin and cracked gas oil
	Residfining	Atmospheric tower residuum
Gulf Research & Development Co.	Gulf HDS Type I and Type II	Atmospheric tower residuum
	Gulf HDS Type III	Atmospheric tower residuum
	Heavy Gas Oil Gulfining	Virgin or cracked heavy gas oils
Institute Francais de Petrole	IFP Vacuum Gas Oil HDS	Vacuum gas oil
	IFP Resid HDS	Atmospheric tower residuum
Standard Oil Co. (Indiana)	Resid Ultrafining	Vacuum residuum
	VGO Ultrafining	Vacuum gas oil
Universal Oil Products Co.	RCD Isomax	Atmospheric reduced crude, deasphalted vacuum tower residuum
	Hydrobon Process	Light and heavy distillates

(1) A Typical Hydrodesulfurization Process

A typical hydrodesulfurization process flow scheme, derived from the Gulf HDS process, is illustrated in Figure XI-2. This diagram reasonably represents most fixed bed residuum desulfurization processes. Residuum desulfurization is the process for the direct removal of sulfur for distillation column bottom streams, commonly called residua. The atmospheric reduced crude feed (that portion of the distillate remaining after the most volatile fraction, gasoline, is removed at atmospheric pressure) is supplied double desalted to limit the solids deposition on the fixed bed catalyst. The reduced crude feed then passes through a solids removal section which separates filterable solids such as iron compounds. The oil feed is mixed with makeup and recycle hydrogen, heated, and reacted over a fixed bed of catalyst at elevated pressure and temperature where H_2S is evolved. Specific operating conditions vary depending on the type of feedstock, the desired product, and the particular process. For residuum feed, the pressure may range upward from 71.2 kg/cm^2 (1000 psig). Typical reaction temperatures are 399 to 454 degrees C (750 to 850 degrees F). The reactor effluent is cooled and recycle gas is separated. Sulfur is removed from the recycle gas before it joins the reactor feed. Separator liquids flow to fractionation or stripping.

When distillates are fed to desulfurization processes, the solids removal step is unnecessary since these distillates are already purified liquids. The remaining processing steps are essentially the same as illustrated in Figure XI-2. However, with lower boiling distillates the catalyst quantity needed in the reactor is less and the pressure and temperature conditions are less severe for a given level of sulfur removal. For distillates, hydrotreating pressures may range upward from 29 kg/cm^2 (400 psig) and the temperatures may be between 371 and 427 degrees C (700 and 800 degrees F).

An alternative system to the fixed bed reactor is used in the H-Oil process which was developed by Cities Service R&D and Hydrocarbon Research, Inc. This process uses an ebullating bed of catalyst through which the oil and hydrogen flow. The ebullating bed* process is competetive with fixed bed

* Similar to a fluid bed but with liquid as the dispersing medium.

FIGURE XI-2
Typical Flow Scheme for a Fixed Bed
Hydrodesulfurization Process

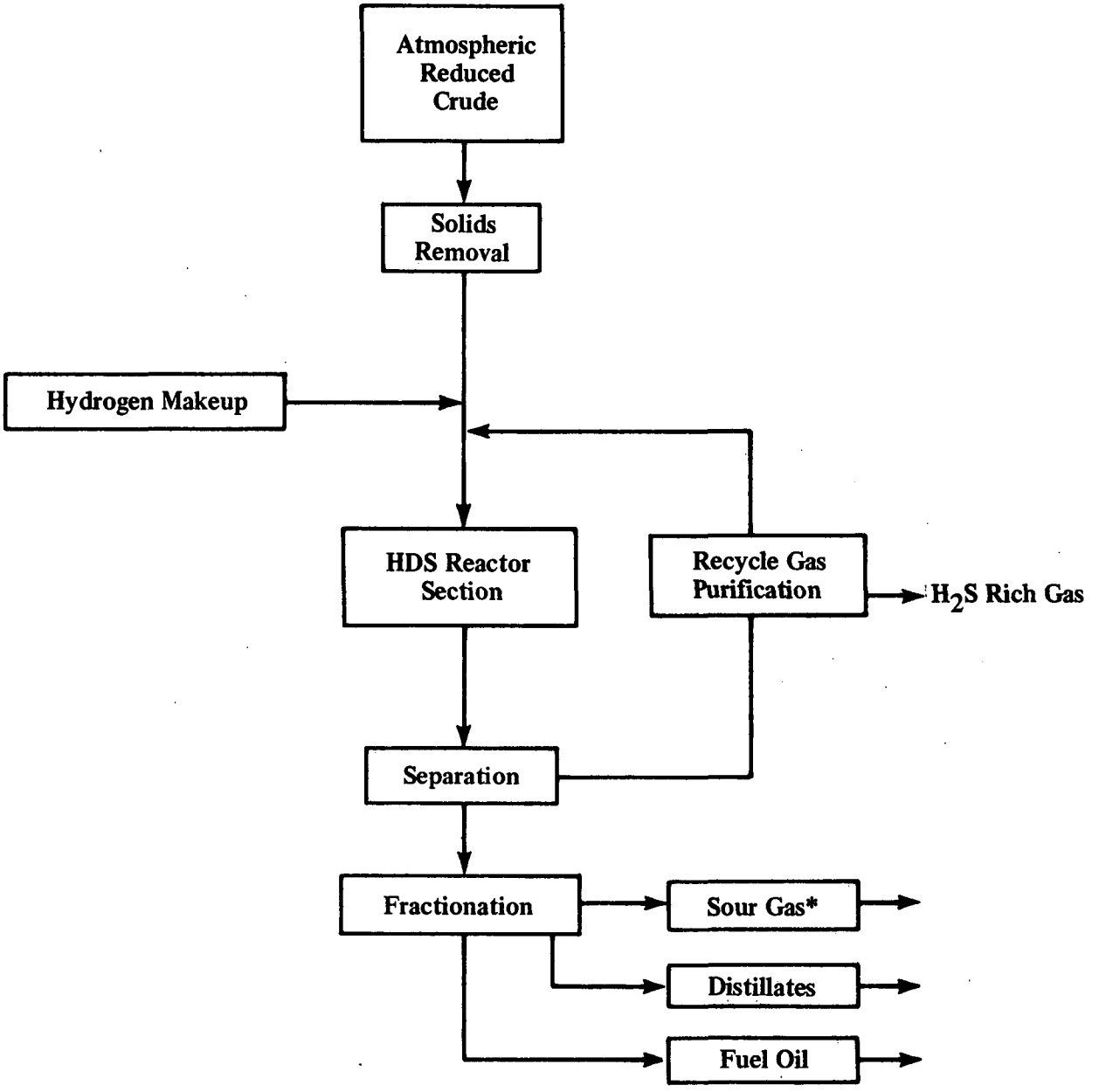

* A gas fraction containing malodorous sulfur compounds.

systems primarily when residuums are fed. Advantages of the ebullating bed reactor over a fixed bed reactor in such a system are:

- Solids contained in the feed pass through the ebullating bed and do not cause plugging as occurs with fixed beds

- Catalyst can be added and removed from the ebullating bed reactor while it is in operation, thus avoiding the necessity for shutting down when catalyst activity is too low

- In general, smaller catalyst particles can be used in ebullating beds. These show higher reactivity for residuum desulfurization.

(2) Hydrogen Manufacture

A typical flow scheme for hydrogen manufacture from natural gas by reforming is shown in Figure XI-3. In this figure, natural gas feed enters the plant. Refinery gas could also be used. Because catalysts used in reforming are rapidly deactivated by sulfur, the natural gas is thoroughly cleaned. It may be first scrubbed by caustic to eliminate acidic sulfur compounds such as H_2S. The natural gas may then flow through metal-promoted activated carbon beds for removal of remaining traces of acidic sulfur compounds and compounds such as COS and CS_2. The natural gas entering the reforming furnance should contain less than about 0.1 ppm of sulfur. The reforming furnace feed gas is preheated, mixed with steam, and passed through nickel catalyst contained within furnace tubes. The reaction of steam and methane takes place forming H_2, CO, CO_2, and a small amount of unreacted CH_4 ($aH_2O + bCH_4 \rightarrow cH_2 + dCO + eCO_2 + fCH_4$). The tube skin temperature is 871 to 982 degrees C (1600 to 1800 degrees F), and reforming pressure may range up to about 22.1 kg/cm^2 (300 psig). Product gases are quenched at the outlet of the reforming furnace by injection of water and steam. The quenched gas passes through an iron shift conversion catalyst to form additional hydrogen ($CO + H_2O \rightarrow H_2 + CO_2$). The shift conversion reactor effluent is cooled, excess water, which is saturated

FIGURE XI-3
Typical Natural Gas Reforming Process

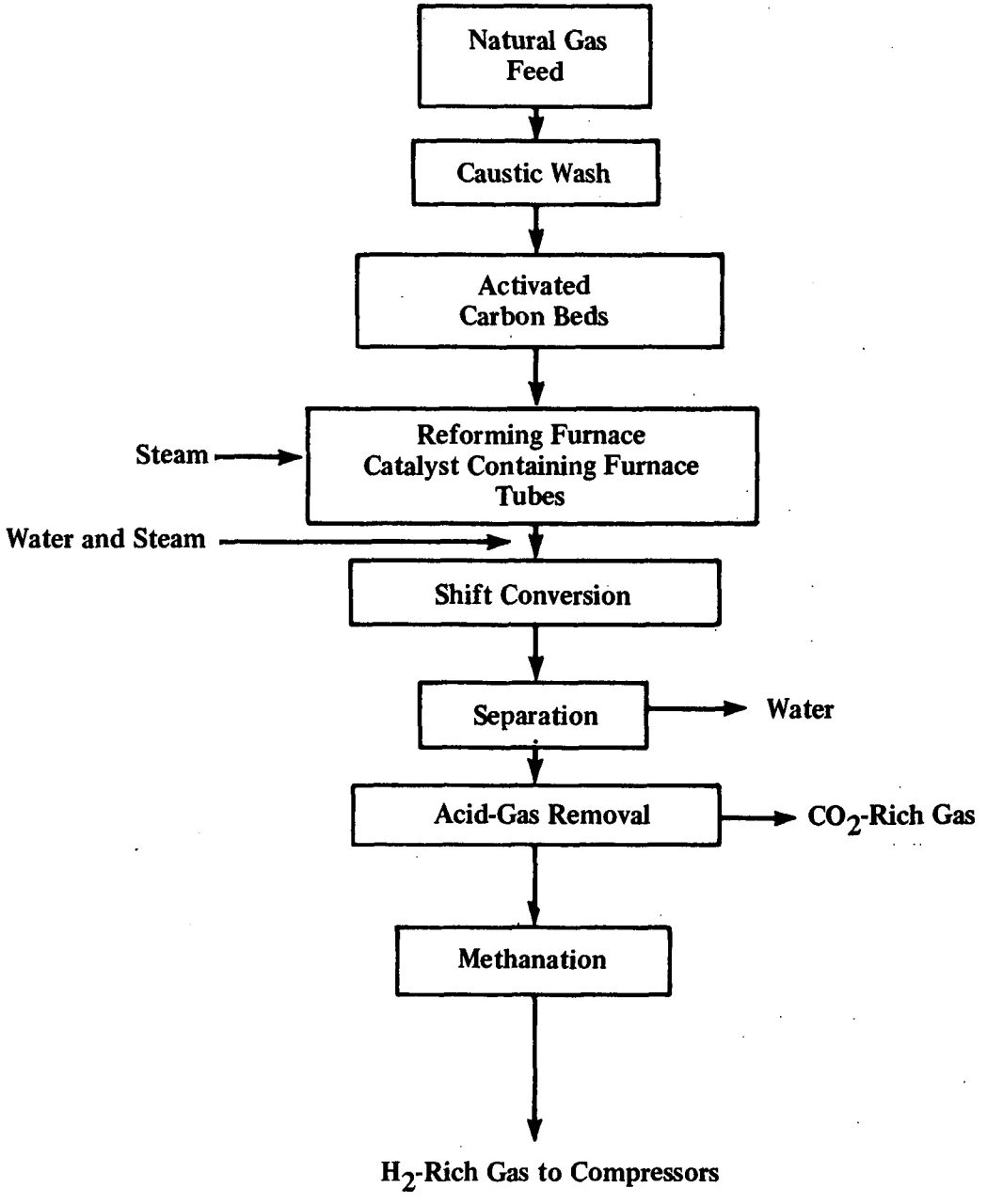

with CO_2, is separated, and the cooled gas stream passes through acid-gas removal. Acid-gas removal may use the monoethanol amine process, hot potassium carbonate process, or one of the other CO_2 removal processes. Relatively simple acid-gas removal processes may be employed because only carbon dioxide need be removed. After CO_2 removal, the main gas stream flows to methanation where the final traces of CO and CO_2 contained in the gas (which may harm the HDS catalyst) are converted to methane over a nickel catalyst ($aCO + bCO_2 + cH_2 \rightarrow dCH_4 + eH_2O$). The hydrogen-rich gas flows to compressors for boosting to the required HDS reactor system pressure. For the cases analyzed in this study, methane requirements to manufacture the process hydrogen are quantified below in Table XI-2.

Table XI-2
Hydrogen Plant Requirements and Production Rates

	Cases				
	1	2	3	3A	4
Methane required					
(x 10^6 ft^3/day)	1.65	12.00	16.00	0	33.00
(m^3/day)	46,725	339,850	453,125	0	934,550
Hydrogen manufactured					
(x 10^6 ft^3/day)	3.30	24.00	32.00	32.00	66.00
(m^3/day)	93,450	679,700	906,250	906,250	1,869,100

Alternative conventional hydrogen sources include hydrogen from other refinery processes, naphtha reforming, or partial oxidation of liquid hydrocarbons. Process hydrogen, which is a by-product of another process, is the least expensive and the most desirable if it is available. Important sources for this hydrogen include excess gas from catalytic reforming which contains hydrogen of purities from 65 to 95 percent depending on the severity of the catalytic reforming operation. Hydrogen from ethane cracking is recovered from the demethanizer. This stream, which produces a gas stream that contains 85 to 90 percent

hydrogen, is suitable for use in HDS systems. Another potential hydrogen source may be from acetylene plant by-product gas. Many of these plants are based on partial oxidation of light hydrocarbons. At the exit of the reaction zone, the gases are rapidly cooled by direct quenching and the cooled gas is compressed for purification. This gas contains 75 to 85 percent H_2 plus CO. After CO shifting, CO_2 removal, and methanation of residual CO and CO_2, a high purity hydrogen can be produced.

Naphtha reforming is second to natural gas reforming as the least expensive process for hydrogen generation. The naphtha reforming process is similar to natural gas reforming as illustrated in Figure XI-3. The gasoline produced from crude oil in the desulfurization Cases 1 to 4 could be used for generating hydrogen via naphtha reforming.

Another conventional hydrogen manufacturing source is partial oxidation using the Texaco or Shell processes. Liquid hydrocarbon feed is injected into a reaction chamber in the presence of steam with a minimum amount of oxygen for partial oxidation. The resulting gases are quenched and purified. Partial oxidation is the most expensive of conventional hydrogen manufacturing systems discussed here but its versatility in accepting a wide variety of feeds is a significant advantage. Partial oxidation processes are discussed in greater detail in another chapter of this report.

In the future, new processes for hydrogen manufacture may be used. Several unconventional hydrogen processes are presently being developed in conjunction with coal gasification processes which require large quantities of inexpensive hydrogen. One of these processes is gasification of petroleum coke with steam and oxygen to produce a gas with a high content of hydrogen and CO. The gas is shifted, acid-gas is removed, and the residual CO and CO_2 in the gas is methanated to produce the product hydrogen. This process is similar to the coal and char gasification process discussed in detail in other process studies.

* * * *

The five desulfurization schemes presented here are in order of increasing severity of treatment. The discussion of pollution-control processes is discussed in the next section:

(3) Case 1 (Figure XI-1 - Case 1)

Case 1 presents the simplest approach to distillate hydrodesulfurization. Here, no hydrodesulfurization of the residuum is attempted. Gasoline represents 20.3 percent by volume of the crude oil feed and boils below 150 degrees C (300 degrees F). It is separated by distillation in an atmospheric topping unit and routed elsewhere in the refinery. The remaining 79.7 percent of oil enters the desulfurization section. Hydrogen for desulfurization is assumed to be manufactured from natural gas, although other hydrogen sources would be suitable. Naphtha, of 149 to 221 degrees C (300 to 430 degrees F) boiling range is produced at a yield of 13.5 percent of the crude oil. The naphtha is processed in a low pressure hydrotreater (a pressurized hydrodesulfurization vessel) which removes 95 percent of the feed sulfur content. The gas oil from the atmospheric tower boils between 232 and 343 degrees C (450 and 650 degrees F). This gas oil, representing 21.1 percent of the crude oil, is processed in separate hydrodesulfurization units because higher pressures and larger amounts of catalyst are required to achieve the desired sulfur reduction. Hydrodesulfurization of the gas oil reduces feed sulfur content by 90 percent. In both the hydrotreater and HDS units, sulfur is produced as hydrogen sulfide which is separated from the vented reactor gas. The total stabilized HDS products are combined and blended with the 44 percent yield of atmospheric residuum. This mix is called desulfurized oil. *

Vented gases from the hydrotreater and the HDS units are combined and cleaned of H_2S by monoethanol amine (MEA) scrubbing. H_2S-rich regenerated gas from the MEA treating section flows to a Claus plant for sulfur recovery. Tail-gas from the Claus is treated by one of several proprietary treating processes such as the Beavon process. As seen from Figure XI-1, Case 1, only 12 percent of the crude oil sulfur is recovered as liquid sulfur from the Claus unit.

---

* Note that the hydrodesulfurized products may have greater value as gasoline, etc., and, therefore, would not necessarily be blended back into the residuum in most refineries. However, this blending is assumed in this study to permit process comparisons.

In Case 1 a desulfurized oil sulfur content at 1.66 weight percent is only slightly lower than the sulfur content of the crude oil feed, 1.7 weight percent. However, the sulfur content of the oil after removal of gasoline is 1.9 percent. The reason, of course, is that about 85 percent of the total sulfur in the crude oil is contained in the atmospheric residuum which is not directly desulfurized. It is evident, however, that Case 1 alone cannot legitimately be viewed as a desulfurization process.

(4) Case 2 (Figure XI-1 - Case 2)

Case 2 shows a process addition to Case 1 which will partially remove sulfur from the residuum. In Case 2, topping unit residuum is fed to a vacuum still which allows recovery of 31.8 percent of the original crude oil as vacuum gas oil distillate. The vacuum gas oil is combined with atmospheric gas oil for hydrodesulfurization; vacuum still bottoms represent 12.2 percent of the crude oil and contain 42 percent of the crude oil sulfur content. The desulfurizing products from hydrotreating and hydrodesulfurization are combined and blended with vacuum still residuum to form the desulfurized oil pool. The sulfur content of this pool contains 0.98 weight percent (slightly less than 50 percent of the crude oil feed sulfur).

(5) Case 3 (Figure XI-1 - Case 3)

An additional processing complexity is added in Case 3 to further reduce the desulfurized oil sulfur level. Solvent refining* is added to separate sulfur containing extract from the vacuum residuum. Because the extract contains less vanadium, nickel, iron, carbon, sulfur, and nitrogen than the untreated residuum, it can be hydrodesulfurized while the whole residuum cannot. The solvent extract is processed in HDS Unit No. 2. The extract is processed separately from the gas oil because it is a very high molecular weight oil and requires more severe treating

* A liquid-liquid separation process in which most of the asphaltenes are separated from the light oil. The asphaltenes contain most of the sulfur from the vacuum residual oil.

conditions than the atmospheric and vacuum gas oils. The HDS No. 2 unit reduces the extract sulfur content by about 90 percent. From 70 to 90 percent sulfur removal is considered good for high boiling oils such as vacuum resid extract. The desulfurized products from the hydrotreater, from HDS No. 1 and from HDS No. 2 are combined and blended with the solvent refining unit raffinate.

The desulfurized oil pool for Case 3, at 0.48 percent sulfur, contains about 23 percent of the sulfur content of the crude oil feed.

Additional process steam required for HDS processing from the main refinery's boiler plant, and incremental process fuel and electrical power requirements are reported in Table XI-3 for the more complicated cases analyzed in this study - Cases 3 and 4.

(6) Case 3A (Figure XI-1, Case 3A)

Case 3A is the same as Case 3 except that hydrogen is generated by partial oxidation of the asphaltenes* ($C + O_2 + H_2O \rightarrow H_2 + CO + CO_2$ followed by a shift reaction) instead of using natural gas steam reforming. Although greater capital costs are encountered using partial oxidation and less oil product is formed, the high sulfur raffinate not only makes hydrogen for the HDS units but its consumption as partial oxidation feedstock removes it from the desulfurized oil. Elimination of the raffinate yields a desulfurized oil having 0.18 percent sulfur. Total sulfur in the desulfurized oil represents approximately 10 percent of the crude oil suflur content.

This approach toward total hydrodesulfurization, with no residuum product, might be employed with crudes containing high metals content. These crudes could not be processed by direct desulfurization as discussed in Case 4.

* The residual phase of a liquid-liquid solvent extraction process. The other layer contains the solvent and extracted component.

Table XI-3
Steam Balance, Fuel and Power Requirements

Case 3	Boiler Plant	Crude Vacuum Unit	Hydro-treator	HDS	Solvent Refining and HDS of Extract	Sulfur Recovery	Total
Process steam required							
(x 10^3 lb/day)	-6,997	4,179	0	1,322	2,245	-749	0
(x 10^3 kg/day)	-3,174	1,896	0	600	1,018	-340	0
Electrical power consumed (kWh/day)	19,871	121,000	13,623	121,670	53,094	2,130	331,388
Fuel required to generate process heat (barrels/day)	1,623	1,800	275	730	1,215	174	5,817
Less plant production (FOE* barrels/day)							-307
Net fuel purchased (barrels/day)							5,510
Case 4					**Resid Desulfur-ization**		
Process steam required							
(x 10^3 lb/day)	-3,328	2,902	0	527	559	-660	0
(x 10^3 kg/day)	-1,510	1,316	0	239	254	-299	0
Electrical power consumed (kWh/day)	9,434	84,158	13,623	48,530	176,000	1,890	333,635
Fuel required to generate process heat (barrels/day)	771	1,152	275	291	2,816	155	5,460
Less plant production (FOE* barrels/day)							-828
Net fuel purchased (barrels/day)							4,632

* Fuel oil equivalent

Note that use of the heaviest residuum from any of the processes as partial oxidation unit feed will reduce the sulfur content of the desulfurized oil, and eliminate the need for natural gas for hydrogen manufacturing. The reason partial oxidation has not been widely practiced in the past is because low cost natural gas was available and the capital cost of natural gas reforming was less. Partial oxidation, however, requires a more complicated acid-gas removal process than the MEA (monoethanolamine) systems employed in most refineries. This point is discussed in more detail in another chapter of this report.

(7) Case 4 (Figure XI-1 - Case 4)

In Case 4, the crude oil is assumed to have low nickel and vanadium content. Therefore, residuum can be directly desulfurized economically. The nickel plus vanadium content of the residuum feed to direct desulfurization must be 100 ppm or less for economic operation. In Case 4 the atmospheric unit residuum is fed directly to catalytic desulfurization for 90 percent sulfur removal. This extent of sulfur removal represents the upper limit of present day desulfurization capability for heavy feedstocks. The desulfurized oil for Case 4 contains between 9 and 10 percent of the total crude oil sulfur. Its sulfur content is 0.2 percent.

* * * * * *

As depicted in Figure XI-4, it is seen that as requirements demand increased sulfur removal from the crude oil, a higher percentage of the crude (more of the residuum) must be treated.

3. DISCUSSION OF POLLUTION CONTROL PROCESSES

The character and nature of the major waste streams of concern in hydrosulfurization processes are discussed in this section. Control treatment methods and alternatives for sulfur recovery are also addressed.

(1) Sulfur Recovery

The sulfur which is produced from hydrodesulfurization of oils is entirely hydrogen sulfide, H_2S, and is recovered from reactor

FIGURE XI-4
Percent of Crude Oil Desulfurized for
Reduced Sulfur in Desulfurized Oil,
100,000 BPD Crude Oil, 1.7 Percent Sulfur

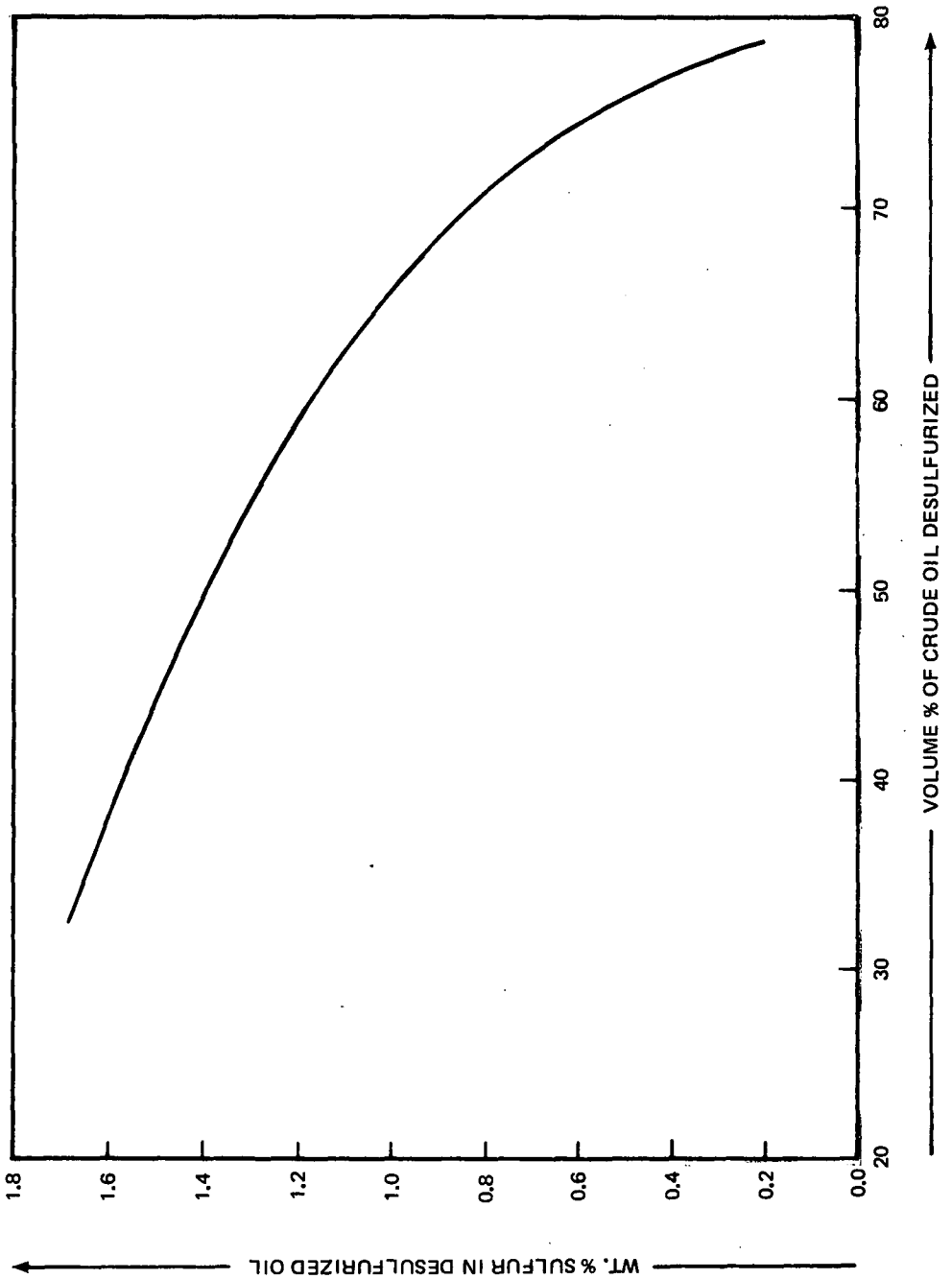

vent gas. Some dissolved hydrogen sulfide is removed from the liquid product by stripping and fractionating. In addition, sulfur removal systems will be used within partial oxidation plants such as is illustrated in Case 3A. It has been assumed that the sulfur removal processes use monoethanolamine (MEA). The MEA system is a relatively simple acid-gas removal process that has received wide application in petroleum refineries. It is applicable in this case because the gas does not contain COS, CS_2, or HCN. Some of the other sulfur removal systems which may be applicable include diethanolamine (DEA), Sulfinol, hot potassium carbonate, Purisol, Rectisol, Stretford and others.

For most acid-gas removal processes, sulfur is concentrated as H_2S which then must be converted to elemental sulfur by processing through a Claus unit. One-third of the H_2S feed to a Claus plant is burned in a boiler forming SO_2. The SO_2 reacts with H_2S over bauxite catalysts in one or more reactor stages forming elemental sulfur. The sulfur is condensed and removed from the process as a liquid. The Claus plant tail-gas contains not only unconverted H_2S and SO_2 but also small amounts of COS, CS_2, elemental sulfur vapor, and elemental sulfur liquid mist. The sulfur content of the tail-gas is reduced by a tail-gas treating process such as the Beavon process, developed by Ralph M. Parsons Co. In the Beavon process, the tail-gas is hydrogenated over a cobalt-molybdenum catalyst (similar to HDS catalyst) to convert all sulfur forms to hydrogen sulfide. After cooling, gas containing hydrogen sulfide is treated by a Stretford system which converts the H_2S directly to elemental sulfur. Overall sulfur recovery on the order of 99 percent can be achieved with this system.

The sulfur losses from this tail gas cleaning system includes:

- Sulfates and thiosulfates which accumulate in the recirculating liquor (requiring a small bleed stream to wastewater treatment)

- Sulfur dioxide which was not converted over the hydrogenation catalyst

- Small quantities of hydrogen sulfide (perhaps 5 to 50 ppm).

In a refinery, this off-gas may be incinerated and could form part of the oxidant (oxidizing agent) to support combustion for the refinery fuel.

(2) Gaseous Wastes

Although the Claus tail-gas will be cleansed of most of its sulfur, small amounts of sulfur (as H_2S) will still be present in the cleaned gas which can be incinerated (discussed in previous paragraph).

Another waste gas stream is CO_2-rich gas from the natural gas reforming plant. The CO_2 is formed during reforming and is separated by an acid-gas removal unit within the hydrogen manufacturing plant. Sulfur content of this gas should be nil because of the extreme care used in cleaning the feed gas to the plant.

Two other sources of waste gas are connected with the operation of the hydrodesulfurization reactor section. The flows of both gas streams are intermittent and are discussed below.

The activity of fresh HDS catalysts can be improved by treating the catalyst with a sulfur-rich gas. Metals on the catalyst are converted to sulfides. This activation procedure may involve pressuring the system with hydrogen and the introduction of H_2S (or CS_2 to form hydrogen sulfide) into the system for the sulfiding reaction. During this step, some gas containing H_2S may be vented from the recycle gas system.

Another intermittent gas stream is the gas evolved when deactivated HDS catalyst is regenerated by burning off carbon deposits. One method of catalyst regeneration involves controlling air injection into the HDS reactor system which is pressurized by inert gas. As carbon on the catalyst is burned off, sulfur contained in the catalyst is evolved as SO_2. The SO_2 is scrubbed from the recirculating gas by injected caustic. However, some residual SO_2 may still remain in the gas which may be vented to control the reactor pressure.

The fuel gas recovered during MEA scrubbing can be consumed internally to meet process needs. The fuel-oil-equivalent

(FOE) heating value of this gas is 1.58×10^6 kcal/barrel (6.3×10^6 Btu/barrel). Its composition can be found typically to be:

Constituent	%
H	36.7
C_1	47.0
C_2	12.0
C_3	3.8
C_4	0.3
C_5	0.2
Total	100.0

The quantity of fuel gas produced for the cases analyzed in this study are shown in Table XI-4 below:

Table XI-4
Fuel Gas Production, FOE barrels/day

Case			
1	2	3 & 3A	4
98	255	307	828

(3) Liquid Wastes

One of the liquid streams is related to HDS catalyst regeneration. This is spent caustic from scrubbing gases evolved during catalyst regeneration. The spent caustic will contain caustic, sodium sulfate, sulfite, possibly thiosulfates, and certainly carbonates and bicarbonates.

During normal operation of the HDS unit, its combined gaseous and liquid effluent stream contains ammonium salts. This ammonia is generated from hydrogeneration of the small

quantity of nitrogen in the initial feedstock (approximately 0.1 kg nitrogen/bbl of crude) of the cases analyzed. Ammonium salts reduce HDS catalyst activity and may plug downstream piping. The ammonia can be removed by water-washing the HDS effluent stream. The recovered water will contain dissolved ammonia, H_2S and CO_2. This is the flow stream for which the Chevron process was developed. Alternatively, this stream could be stripped and the effluent gases directed to the sulfur burner of a split-flow Claus unit. The stripped water would then contain approximately 15 ppm of H_2S and 70 ppm of NH_3; this water is pure enough to be directed to the cooling water circuit. The expected water requirements for the four cases of hydrosulfurization discussed are given in Table XI-5.

Table XI-5
Expected Water Requirements

	Case*			
	1	2	3	4
Process water required				
(l/min)	159	318	379	379
(gal/min)	42	84	100	100

* Case 3A would require additional water for the Texaco partial oxidation unit as discussed in that process synopsis.

In the natural gas reforming plant, the shift conversion effluent is cooled and water is condensed before the gases enter the acid-gas removal unit. The shift converter effluent condensate is saturated with CO_2. There should be no sulfur contained in this condensate except possibly on initial plant startup with a new charge of catalyst. During initial startup, small amounts of sulfur may be evolved from the catalysts and these might appear in this stream.

Because natural gas reforming plants operate at modest pressures, the product gas must be compressed to the high pressure of the HDS systems. Several stages of compression must be used. Condensate collected at the compressor interstage coolers will not only contain some dissolved gases, but also small amounts of lubricating oil from the compressors.

(4) Solid Wastes

The solids produced from the desulfurization unit are the spent catalysts from the different sections of the plant. HDS catalyst must be replaced when poisoned by vanadium,iron and nickel compounds. When contaminated with carbon, the catalyst can be regenerated by burning. The spent catalyst will contain cobalt, molybdenum, nickel, alumina, and the contaminants vanadium, nickel, and iron. Before removing the catalyst from the reactors, it should be oxidized under controlled conditions to remove the pyrophoric (capable of igniting spontaneously) iron sulfide and carbonaceous deposits.

Several different solids products will be available for disposal from the natural gas reforming. One solid is the spent metal-promoted active carbon, which can be regenerated several times by steam and air. During regeneration, the adsorbed sulfur compounds convert to elemental sulfur which is then readsorbed by the carbon. When the sulfur content of the carbon reaches 70 percent or more, its activity declines and it must be discarded. The catalyst should be regenerated before disposal to convert all of the sulfur to the elemental form.

The natural gas reforming plant contains at least three kinds of catalysts. The reforming catalyst, which is contained in the reforming furnace tubes, is nickel on a refractory support. The shift catalyst is iron oxide and the methanation catalyst is nickel on alumina. The nickel catalyst is very sensitive to sulfur and can be quickly deactivated when small amounts of sulfur are present in the processed gas. More frequently, reforming catalyst is deactivated by loss of the necessary ratio of steam to hydrocarbon feed. This causes excessive carbon deposition on the catalyst. The catalyst must then be removed from the furnace tubes and replaced with fresh catalyst. Over a period of time, iron shift conversion catalyst gradually decreases in activity, probably as a result of changes in its crystalline structure. Inadvertent injection of liquid water into a bed of hot shift catalyst will cause catalyst disintegration, thereby increasing the pressure drop across the catalyst bed, and requiring replacement of the catalyst. Methanation catalyst is rarely deactivated by sulfur because of its location in the process. However, the methanation catalyst is subject to variations in carbon oxide content of its feed. When the total carbon oxides exceed about 1.5 percent in

the methanator feed, runaway temperature rises occur, causing catalyst deactivation. The reforming, shift, and methanation catalysts should be oxidized within the plant under controlled conditions to return them to a stable form before removal. Otherwise, the catalysts are pyrophoric. Spent reforming and methanation catalysts from large plants will probably be returned to the catalyst supplier for recovery of nickel. The iron catalyst will probably be discarded.

Bauxite is used in the Claus system as a catalyst. The bauxite may require replacement as a result of plant operational problems, the most frequent of which are:

- Unexpectedly high-hydrocarbon content in the feed gas and a deficiency in the amount of combustion air. This causes formation of soot which is deposited in the bauxite bed causing plugging.

- Excessive amounts of steam introduced to the bauxite bed which tend to soften the catalyst. This causes increased pressure drop and requires catalyst replacement.

- Another problem which occasionally occurs is condensation of sulfur within the catalyst bed because of poor catalyst bed temperature control. The sulfur liquid plugs the bed creating an increased pressure drop and, if the bed is badly plugged, requires catalyst replacement.

Spent bauxite, therefore, may contain soot and sometimes may also be contaminated with elemental sulfur. Bauxite and its contaminants are stable so they can be disposed of as landfill without further treatment.

The estimated amounts of catalyst exhausted during plant turnarounds (perhaps an annual occurrence) are quantified in Table XI-6.

Table XI-6
Spent Catalyst, lb/day (kg/day)

	Case			
Unit Process	1	2	3	4
Hydrotreating	185 (84)	185 (84)	185 (84)	185 (84)
HDS of gas oil	243(110)	487(221)	485(220)	243 (110)
HDS of vacuum residuum	–	–	952(432)	–
Direct desulfurization of residuum	–	–	–	8849(4014)
	428(194)	672(305)	1622(736)	9277(4208)

4. COSTS OF POLLUTION CONTROL*

The costs for pollution control by hydrodesulfurization of crude oil fractions are presented in this section (the format is derived in Chapter III of this report). They are 1973 costs for East Coast U. S. refineries. Cost information was obtained from process licensors, literature sources, and from discussions with technical advisors who are experienced in refinery processing. The costs presented are based on sulfur removal only. The cost for treatment of other wastes, generated by the desulfurization section (discussed in Section 3), cause incremental effects in existing waste treatment facilities and therefore are not considered.

The incremental** capital costs for pollution control are reported in Table XI-7 for Cases 1, 2, 3, and 4. Capital costs are separated into costs directly related to hydrodesulfurization of oil and costs directly related to sulfur recovery from fuel gases generated by the hydrodesulfurization processes. These costs are incremental since it was assumed that the sulfur control processes are added to an existing petroleum refinery.

* The costs presented here are preliminary estimates; the actual costs of emission control in this process will not be known until a full-scale facility has been constructed and operated.

** Incremental costs in this report refer to that portion of the total plant cost that is assignable to pollution control facilities.

Table XI-7
Incremental Capital Investment[a] ($ Million)

Item	Case 1		Case 2		Case 3		Case 4	
	Desulfurized Oil	Clean Fuel Gas	Desulfurized Oil	Clean Fuel Gas	Desulfurized Oil	Clean Fuel Gas	Desulfurized Oil	Clean Fuel Gas
Incremental plant investment[b]								
Vacuum distillation	–	–	7.2	–	7.2	–	–	–
Solvent refining	–	–	–	–	10.6	–	–	–
Hydrotreater	6.0	–	6.0	–	6.0	–	6.0	–
Light distillate desulfurizer	10.0	–	10.0	–	10.0	–	10.0	–
Heavy distillate desulfurizer	–	–	11.4	–	11.4	–	–	–
Deasphalted oil desulfurizer	–	–	–	–	17.4	–	–	–
Reduced crude desulfurizer	–	–	–	–	–	–	45.4	–
Hydrogen manufacture	6.4	–	12.0	–	13.8	–	21.4	–
Boiler facilities	4.0	–	11.0	–	12.4	–	7.2	–
MEA scrubbing	–	1.2	–	3.3	–	4.5	–	4.8
Claus unit	–	0.4	–	1.1	–	1.5	–	1.6
Claus tail gas unit	–	0.4	–	1.1	–	1.5	–	1.6
Subtotal plant investment	26.4	2.0	57.6	5.5	88.8	7.5	90.0	8.0
Project contingencies[c]	4.0	0.3	8.6	0.8	13.3	1.1	13.5	1.2
Incremental plant investment (I)	30.4	2.3	66.2	6.3	102.1	8.6	103.5	9.2
Startup cost[d] (S)	0.9	0.1	2.3	0.2	3.6	0.2	3.2	0.2
Interest during construction[e] (IDC)	7.2	0.5	15.7	1.5	24.2	2.0	24.5	2.2
Incremental working capital[f] (W)	0.8	0.1	1.8	0.2	2.7	0.2	2.7	0.2
Incremental capital investment (C)	39.3	3.0	86.0	8.2	132.6	11.0	133.9	11.8

Notes:

a Incremental plant investment, return on investment during construction, and working capital are treated as capital costs in the year 0 (the year ending with completion of startup operation).

b Installed costs, including engineering design costs, contractors' profit, and overhead.

c Includes costs for unexpected site preparation and hardware requirements at 15% of plant investment.

d At 20% of incremental gross operating cost.

e Computed as the discount rate x incremental plant investment for 1.875 years' average construction period.

$I(1+i)^n = I(1.12)^{1.875} = 1.236761$ or $0.236761I$ additional investment.

f Sum of materials and supplies at .9% of incremental plant investment and net receivables at 1/24 of annual incremental revenue.

Since hydrodesulfurization process installations will be constructed in the private sector, cost calculations have been made using only the DCF financial accounting method.

The incremental capital investment rapidly increases as the oil is further tested to reduce its sulfur content (see Table XI-8 and Figure XI-5). The mildest hydrodesulfurization scheme analyzed (Case 1) costs $42.5 million; the severest (Case 4) requires $145.7 million.

Tables XI-8, -9, and -10 present the incremental capital and operating costs for each of the cases. The operating costs are also separated into costs directly related to hydrodesulfurization and costs directly related to fuel gas cleanup.

The incremental annual operating costs increase substantially as the desulfurized oil quality is improved. For a 100,000 barrel/day 1.7 percent sulfur crude oil plant to decrease the sulfur content of the feed by about 0.6 percent (by weight) of the oil has the effect of doubling the annual operating cost of desulfurization (see Figure XI-6).

The derivation of the formulae for calculating the incremental cost of pollution controls is presented in Chapter III. For the DCF method, the required incremental annual cost, X, for the assumed rate of return is:

$$X = N + 0.23816I + 0.1275S + 0.23077W$$

where: N = incremental net operating cost
I = incremental plant investment
S = startup costs
and W = incremental working capital.

The annual crude oil feedstock supplied (H) is

(100,000 bbl/day) x 0.9 capacity factor x 365 days/yr = 32.85×10^6 bbl/yr. Therefore, the incremental cost of desulfurizing crude oil, when expressed as $/bbl, is

$$\frac{X}{H} = \frac{X}{32.85 \times 10^6 \text{ bbl/yr}}$$

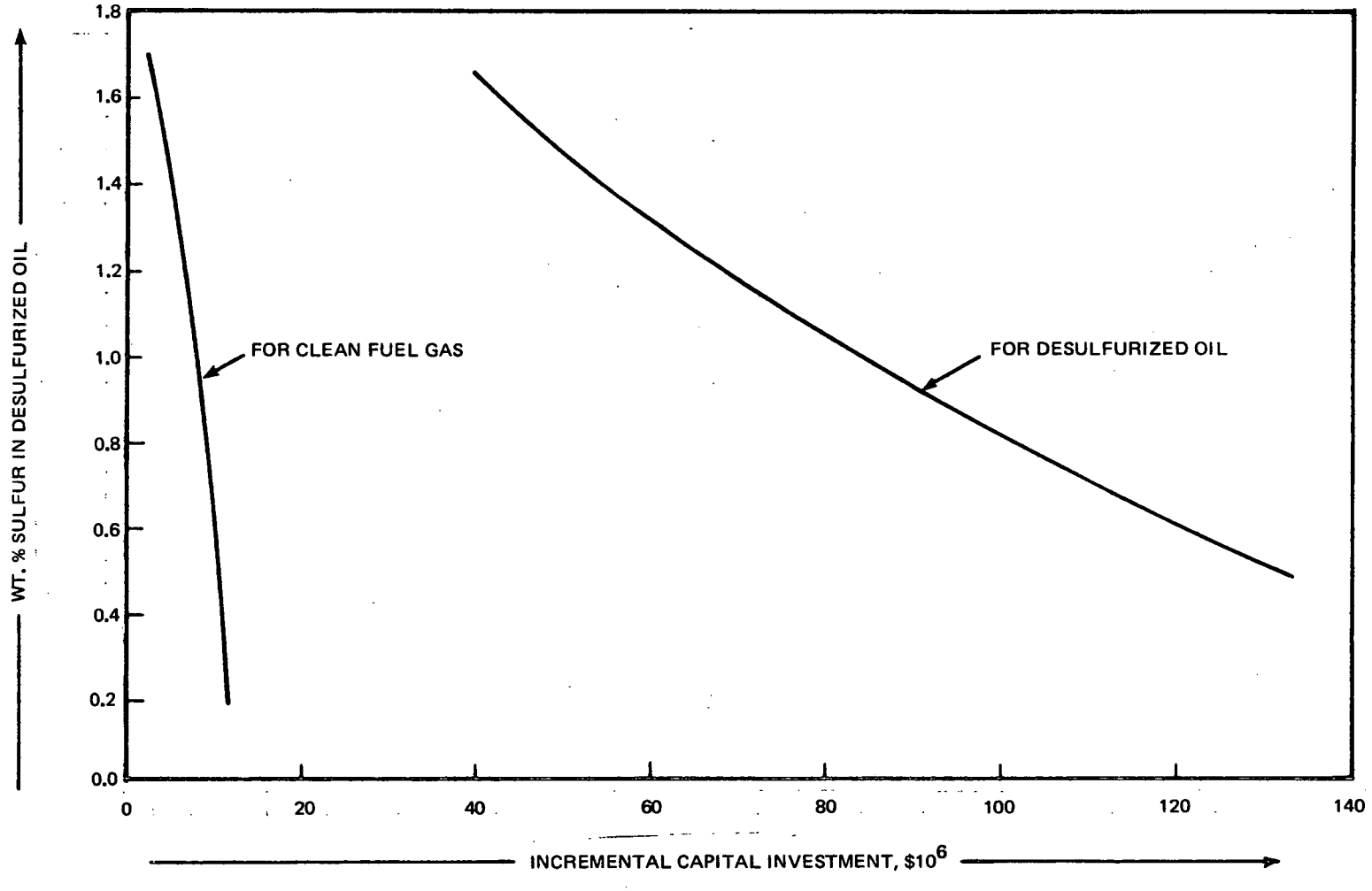

FIGURE XI-5
Capital Investment for Sulfur Reduction
for 100,000 BPD Crude Oil, 1.7 Percent Sulfur

Table XI-8
Incremental Annual Operating Cost ($)

Item	Case 1		Case 2		Case 3		Case 4	
	Desulfurized Oil	Clean Fuel Gas	Desulfurized Oil	Clean Fuel Gas	Desulfurized Oil	Clean Fuel Gas	Desulfurized Oil	Clean Fuel Gas
Labor								
Direct operating labor	309,000	103,100	538,400	182,300	847,300	236,000	540,100	257,400
Maintenance labor (1.5% of I)	456,000	34,500	993,000	94,500	1,531,500	129,000	1,552,500	138,000
Supervision (15% of direct operating and maintenance labor)	114,800	20,600	229,700	41,500	356,800	54,800	313,900	59,300
Incremental labor cost	879,800	158,200	1,761,100	318,300	2,735,600	419,800	2,406,500	454,700
Administration and general overhead (60% of incremental labor)	527,900	94,900	1,056,700	191,000	1,641,400	251,900	1,443,900	272,800
Other direct costs*	1,877,700	1,300	5,549,700	4,600	8,933,600	9,200	7,485,800	7,900
Supplies								
Operating (30% of direct operating labor)	92,700	30,900	161,500	54,700	254,200	70,800	162,000	77,200
Maintenance (1.5% of I)	456,000	34,500	993,000	94,500	1,531,500	129,000	1,552,500	138,000
Incremental cost of supplies	548,700	65,400	1,154,500	149,200	1,785,700	199,800	1,714,500	215,200
Local taxes and insurance (2.7% of I)	820,800	62,100	1,787,400	170,100	2,756,700	232,200	2,794,500	248,400
Incremental gross operating cost	4,654,900	381,900	11,309,400	833,200	17,853,000	1,112,900	15,845,200	1,199,000
By-product credits								
Sulfur ($10/LT)	——	−104,100	——	−434,300	——	−637,600	——	−751,000
Incremental net operating cost (N)	4,654,900	277,800	11,309,400	398,900	17,853,000	475,300	15,845,200	448,000

* Includes catalysts, chemicals and utilities

Table XI-9
Summary of HDS Capital Costs

Case	Desulfurized Oil (Wt % Sulfur)	Desulfurized Oil Incremental Capital Costs ($ Million)	Desulfurized Fuel Gas Incremental Capital Costs ($ Million)
1	1.66	39.3	3.0
2	0.98	86.0	8.2
3	0.48	132.6	11.0
4	0.20	133.9	11.8

Table XI-10
Summary of HDS Operating Costs

Case	Desulfurized Oil (Wt % Sulfur)	Desulfurized Oil Incremental Annual Operating Costs ($/bbl of Crude Oil)	Desulfurized Fuel Gas Incremental Annual Operating Costs ($/bbl of Crude Oil)
1	1.66	0.37	0.03
2	0.98	0.85	0.06
3	0.48	1.32	0.08
4	0.20	1.26	0.08

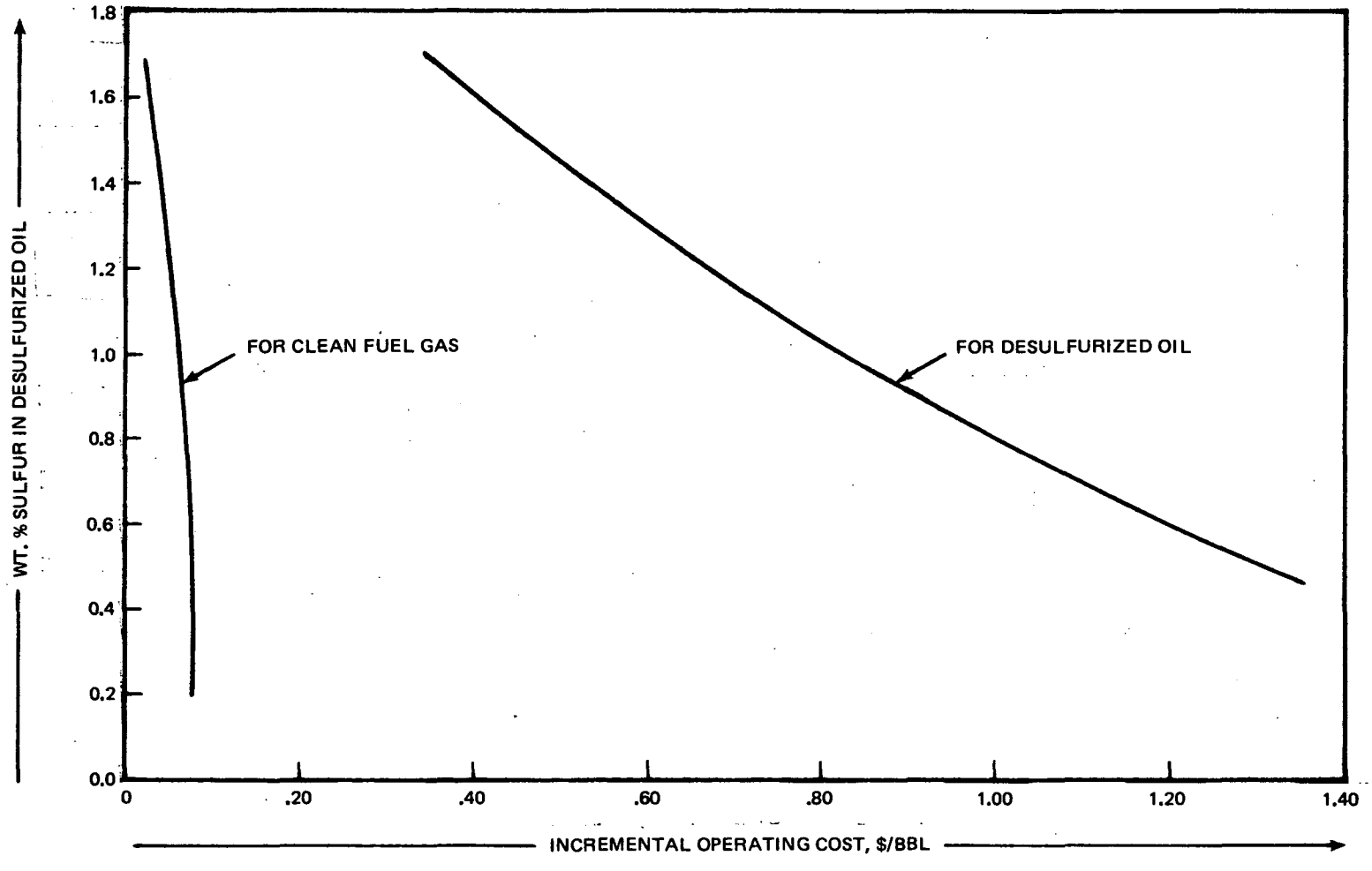

FIGURE XI-6
Cost of Sulfur Reduction for 100,000 BPD
Crude Oil, 1.7 Percent Sulfur

Solutions for the above relationships are shown in Table XI-11. As practiced in the industry, crude oil feedrate quantities were used to express incremental costs. In addition, to facilitate process comparisons, cost per Btu were computed using the conversion factor: 1 bbl crude = 5.875×10^6 Btu

$$(19,480 \text{ Btu/lb})\ (7.18 \text{ lb/gal})\ (42 \text{ gal/bbl}) = 5.875 \times 10^6 \text{ Btu/bbl.}$$

Table XI-11
Incremental Cost of Desulfurizing Crude Oil

	Case 1		Case 2	
	Desulfurized Oil	Clean Fuel Gas	Desulfurized Oil	Clean Fuel Gas
Incremental annual cost (X), \$/yr	12,194,400	861,400	27,784,400	1,971,000
Incremental cost of desulfurization $\left(\frac{H}{X}\right)$, \$/bbl	0.37	0.03	0.85	0.06
Incremental cost of desulfurization: \$/bbl ÷ 5.875×10^6 Btu/bbl, \$/Btu	0.07		0.15	

	Case 3		Case 4	
	Desulfurized Oil	Clean Fuel Gas	Desulfurized Oil	Clean Fuel Gas
Incremental annual cost (X), \$/yr	43,251,400	2,595,100	41,526,100	2,710,700
Incremental cost of desulfurization $\left(\frac{H}{X}\right)$, \$/bbl	1.32	0.08	1.26	0.08
Incremental cost of desulfurization: \$/bbl ÷ 5.875×10^6 Btu/bbl, \$/Btu	0.24		0.23	

Before directly comparing these costs with those derived for the coal gasification processes investigated as part of this study, it should be cautioned that the crude oil feed rate of 100,000 bbl/day, dictated by present-day oil refinery economies, constitutes 150 percent of the energy input used for the coal gasification processes. It should also be emphasized that hydrosulfurization of crude oil does not produce an end product fuel oil. It simply supplies a low sulfur pool of oil which must be subsequently refined to yield any of numerous fuels derived from distillation and blending.

XII. THE GAS COMBUSTION RETORT PROCESS

Oil shale is an impermeable, sedimentary rock containing solid, organic material called kerogen. When heated, kerogen can be transformed into liquid and gaseous hydrocarbons, which can be further processed to make fuel oil. Oil shale deposits in the Rocky Mountain area of the United States (Colorado, Utah, and Wyoming) contain about 600 billion barrels of this type of oil. Interest in the commercial development of this extensive potential source of energy has fluctuated widely over the last 100 years. Some oil from shale was produced prior to the 1859 discovery of natural petroleum, but no serious attention was focused on oil shale until just prior to 1920. At that time there was concern that domestic petroleum resources might not be adequate to meet anticipated demand. New petroleum discoveries, however, resulted in declining interest until 1944 when a Synthetic Liquid Fuels program was established due to the demand for liquid fuels during World War II. The present energy crisis again has renewed interest in producing oil from shale. Many private companies and the Bureau of Mines are working to improve existing oil shale-to-oil conversion processes and to develop new ones.

Two major options are being considered:

- Strip or deep-mining followed by surface processing of the oil shale

- In situ (in-place) oil recovery, that is, underground processing of the shale.

Of these options, only the first approach has been developed to the point where scaleup to commercial production is expected in this decade. The in situ approach is still in the experimental stage and will require significant development work before being commercially viable. In this chapter, only surface processing will be considered.

Oil is recovered from oil shale by heating it to between 425 degrees and 540 degrees C (800 degrees to 1000 degrees F) in a retort (a heating vessel which decomposes the shale) either directly or indirectly. The following three retorting processes are considered

to be candidates for early commercialization from the several processes under development. The processes are the:

- Union Oil Retort process
- TOSCO II Retort process
- Gas Combustion Retort process.

Oil shale retorts are essentially heat exchangers for transferring heat from a heating medium to the oil shale. For the Union Oil Retort and Gas Combustion Retort processes, heat is transferred to the shale directly from the combustion occurring in the retort by burning product gases and residual carbon in the retorted shale. In the TOSCO II Retort process, heat is transferred to the shale indirectly by the introduction of hot solids (ceramic balls) into the retorting bed. Since information was relatively complete for the Bureau of Mines' Gas Combustion Retort process, it was used as the basis for this synopsis.

The Bureau of Mines designed, built, and operated three pilot plants (of 5, 23, and 136 m ton/day capacity) at Anvil Points near Rifle, Colorado, until operations were discontinued in 1955.

1. PROCESS DISPLAY

Figure XII-1 contains the process flow diagram for a facility with a 50,000 bbl/day oil production capacity. This is equivalent to about 70 x 10^9 kcal/day (277 x 10^9 Btu/day). The associated energy balances, flow rates, and stream compositions for this facility are also contained.

The data available on the Gas Combustion Retort process were collected before the need for environmental considerations was emphasized. As a result, the data available on potential pollutants are sparse. In this synopsis, therefore, an attempt has been made to describe a process based on a hypothetical average shale. These data may have to be modified for a particular plant installation.

(1) Basis for Analysis

The process flow sheet data was based on information developed by the Bureau of Mines from operation of its Gas

FIGURE XII-1
The Gas Combustion Retort Process

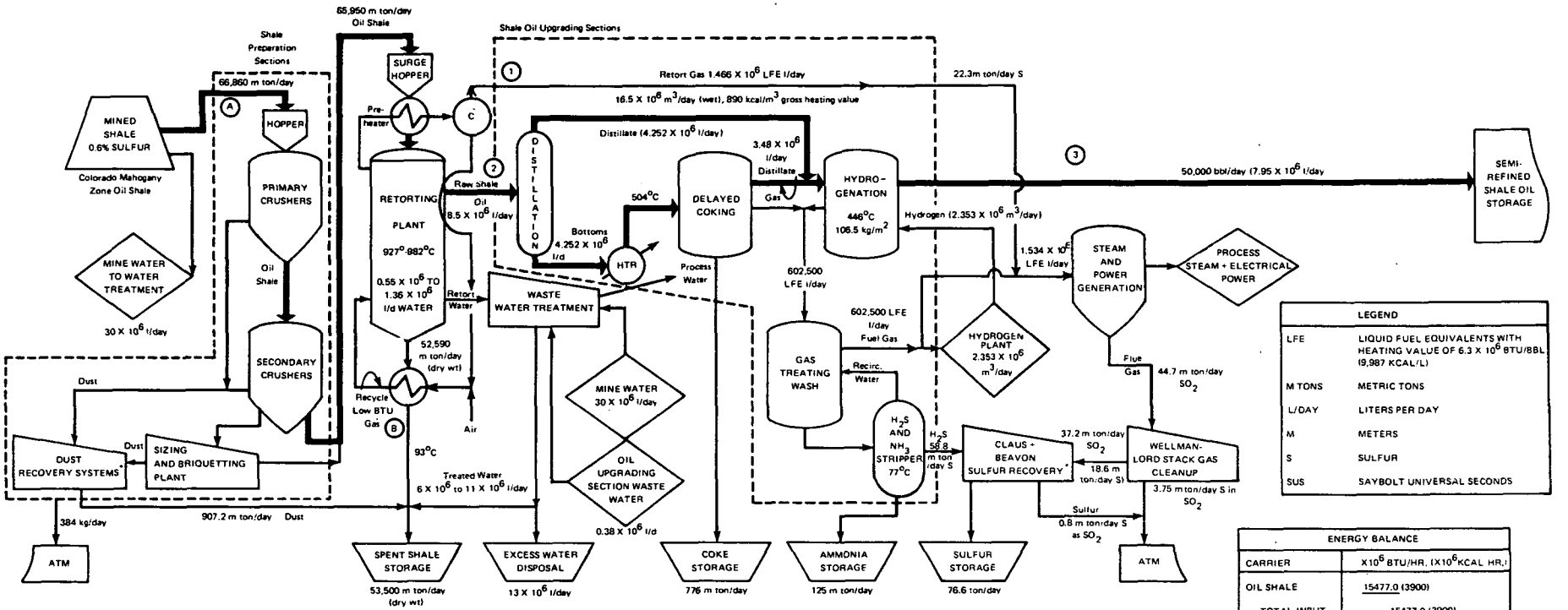

LEGEND	
LFE	LIQUID FUEL EQUIVALENTS WITH HEATING VALUE OF 6.3 X 10^6 BTU/BBL (9,987 KCAL/L)
M TONS	METRIC TONS
L/DAY	LITERS PER DAY
M	METERS
S	SULFUR
SUS	SAYBOLT UNIVERSAL SECONDS

ENERGY BALANCE	
CARRIER	X10^6 BTU/HR. (X10^6 KCAL HR.)
OIL SHALE	15477.0 (3900)
TOTAL INPUT	15477.0 (3900)
SHALE OIL	11559.0 (2912.8)
SPENT SHALE	1405.2 (354)
COKE	1004.1 (253)
AMMONIA	111.2 (28)
SULFUR	23.4 (5.9)
LOSSES	1374.1 (346.3)
TOTAL OUTPUT	15477.0 (3900)

STREAM NO.	Ⓐ	Ⓑ	①	②	③
STREAM NAME	OIL SHALE	SPENT SHALE	RETORT GAS	RAW SHALE OIL	UPGRADED SHALE
COMPONENT	WT. %	WT. %	MOLE %	WT. %	WT. %
	ORGANIC MATTER 13.8	ORGANIC MATTER UNK	N_2 62.1	S 0.74	S 0.005
	C 80.5	MINERAL MATTER UNK	CO 2.3	N 2.18	N 0.035
	H 10.3	SiO_2 42.3	CO_2 24.5	GRAVITY °API, 19.7	GRAVITY °API, 46.2
	N 2.4	Fe_2O_3 4.5	H_2S 0.1	POUR PT, 27°C	POUR PT, < 10°C
	S 1.0	Al_2O_3 13.0	H_2 5.7	VISCOSITY @ 38°C, 2256 SUS	VISCOSITY @ 38°C, 40 SUS
	O 5.8	CaO 23.1	HYDROCARBONS 5.3		
	TOTAL 100.00	MgO 9.9	TOTAL 100.0		
	MINERAL MATTER 86.2	SO_3 1.8			
	CARBONATES 48.0	Na_2O 3.1	FLOWRATE 24.2 X 10^6 FT^3/HR. (685.3 X 10^3 M^3/HR.)		
	FELDSPARS 21.0	K_2O 2.3			
	QUARTZ 13.0	TOTAL 100.0			
	CLAYS 13.0				
	ANALCITE 4.0				
	PYRITE 1.0				
	TOTAL 100.00				
HEATING VALUE	2520 BTU/LB (1400 KCAL/KG)	286 BTU/LB (159 KCAL/KG)	100 BTU/FT^3 (890 KCAL/M^3)	18,750 BTU/LB (10,417 KCAL/KG)	19,925 BTU/LB (11,070 KCAL/KG)

*SPECIFIC TREATMENT AND RECOVERY PROCESSES WERE DEFINED BY THE PROCESS DEVELOPER

Combustion Retort pilot plants at Rifle, Colorado; from the references cited at the end of this process synopsis; and from private communication with the process developer.

The analysis shown is for a 0.6 percent sulfur content oil shale from the Mahogany Zone of Colorado and Utah. This shale contains 10 to 20 percent organic matter, the balance being mineral matter. The composition of this raw shale feed is given in Table XII-1.

Table XII-1
Oil Shale Component Analysis

Major Components	Wt. %	Subcomponents	Weight %
Organic matter	13.8	Carbon	80.5
		Hydrogen	10.3
		Nitrogen	2.4
		Sulfur	1.0
		Oxygen	5.8
Subtotal			100.00
Mineral matter	82.6	Carbonates	48.0
		Feldspars	21.0
		Quartz	13.0
		Clays	13.0
		Analcite	4.0
		Pyrite	1.0
Subtotal			100.00
Total	100.00		

The heating value of the organic matter is 1400 kcal/kg (2520 Btu/lb). It is assumed that 125 liters of oil per m ton of oil shale (30 gal/short ton) are produced, along with 1.94 m^3 of retort gas per liter of oil produced (10,900 ft^3/bbl) with a heating value of 890 kcal/m^3 (100 Btu/ft^3). This gas is used as plant fuel. The oil-shale to shale-oil process thermal efficiency is determined to be 74.7 percent.

(2) Layout and Symbols

The general direction of process flow is from the shale supply on the left to the snycrude (synthetic crude oil) on the extreme right of the flow diagram. Residuals and by-products are shown along the bottom. Inverted trapezoids denote residual storage. The bold line indicates the flow of the primary oil producing process.

The circled figures refer to the stream compositions which also appear as tabulations in Figure XII-1. The overall energy balance is also shown there and the energy balance calculations are given in Table XII-2.

Rhombic-shaped units represent intermediate products or sources for which the distribution is not shown. Nonintegral cleanup processes are indicated by sloping rectangles. These treatment and recovery processes are discussed in the remaining sections of this chapter. For a more thorough explanation of each licensed cleanup process mentioned, refer to the discussion given in Chapter III as well as to readily available process literature and the bibliography included in this report.

2. PROCESS DESCRIPTION

The unit processes which comprise the Gas Combustion Retort scheme are described in this section. By-product manufacture and pollutant generation are discussed where appropriate. The discussion of pollution control processes is covered in the next section.

Table XII-2
Energy Balance Calculations for the
Gas Combustion Retort Process

Carrier	Calculations	(x 10^6 Btu/hr)	(x 10^6 kcal/hr)
Oil shale	73,700 short tons/day x 2000 lb/short tons x 2520 Btu/lb÷24 hrs/day	15,477.0	3900
Total Energy Input		15,477.0	3900
Product shale oil	50,000 bbl/day÷24 hrs/day x 42 gal/bbl x 6.63 lb/gal x 19,925 Btu/lb	11,559.0	2912.8
Spent shale	58,960 short tons/day x 2000 lb/short ton÷24 hrs/day x 286 Btu/lb	1,405.2	354.0
Coke	855 short tons/day x 2000 lb/short ton÷24 hrs/day x 14093 Btu/lb	1,004.1	253.0
Ammonia	138 short tons/day x 2000 lb/short ton÷24 hrs/day x 9668 Btu/lb	111.2	28.0
Sulfur	3.52 short tons/hr x 2000 lb/short ton x 3983 Btu/lb	28.0	7.1
Losses*	(by difference)	1,369.5	345.1
Total Energy Output		15,477.0	3900

* Includes sensible heat of product, by-products, and waste streams as well as air cooling and other incremental losses.

(1) Shale Preparation

The shale is conveyed directly to the receiving hoppers at the crushing plant by truck or conveyor (Stream (A)). It is crushed to minus 26.7 cm (10.5 inch) size in the primary crushers. Secondary crushers reduce the size to minus 7.62 cm (3 inch). The crushed shale passes through screens to remove minus 0.5 cm (3/16 inch) particles for briquetting before going to the retorts. Particles between 2.54 and 7.62 cm are conveyed to surge bins before retorting. According to Bureau of Mines report[2], 1.3 percent of the shale handled during crushing and screening is lost as dust. Half of this loss is assumed to occur during crushing and transporting and the balance in screening (sizing).

(2) Retorting

The following detailed description of the operation of a retort is based on that reported by the USBM (ref. 2). Some of the operations described occur within the retort and as such are not depicted. The crushed and sized or briquetted shale from the surge bins is fed to the retort feed hoppers atop the retorts by belt conveyors equipped with automatic trippers to feed the individual retorts. For a 7,948,500 l/day (50,000 bbl/day) plant, six 17 m diameter retorts having a shale bed depth of 5.5 m are required. The fresh feed at the top of each unit is preheated by the off-gases from the retort combustion zone. In the combustors, located near the midpoint of the shale bed, recycled low-Btu gas is burned with air to heat the shale to the maximum temperature of about 927 degrees C to 980 degrees C. Approximately 82 percent of the recycle gas is fed to the bottom of the retort and is utilized to cool the spent shale to about 93 degrees C prior to discharge. The remainder of the recycled gas with the combustion air is fed directly to the combustor.

Within the retorting plant, the evolved gas, containing entrained crude shale oil, flows through impingment type separators, centrifugal separators and electrostatic precipitators to separate the gas and oil. The retort gas has a heating value of about 890 kcal/m^3 (100 Btu/ft^3 as shown by Stream (1) of Figure XII-1. It is compressed for recycle to the retort and for use as fuel elsewhere within the process. By petroleum standards, the raw shale oil (as described in Stream (2)) is a low gravity, high nitrogen, moderate sulfur crude oil. It

can be further refined by standard crude refinery procedures. The refining scheme used for this analysis is contained within the "Shale Oil Upgrading Sections," as shown in Figure XII-1.

(3) Shale Oil Upgrading

Upgrading of the retorted raw shale oil (Stream 2) is accomplished through distilling, delayed coking and hydrogenating unit processes which are standard petroleum refining operations. The raw shale oil is first heated and sent to a distillation column where it is separated into approximately 50 percent light and 50 percent heavy oil fractions. The light fraction (overhead vapors) is cooled to yield a distillate product, and sent to the hydrogenation unit. The heavy fraction (bottoms) from the distillation column is fed through a heater and sent to the delayed coking unit at a temperature of 504 degrees C.

Coking is a process in which the raw feed is subjected to destructive distillation to yield a solid residue called coke as well as organic liquid and gas products. In delayed coking by increasing liquid phase residence time and not quenching, (allowing higher coking temperatures), the amount of oil (liquid distillate) evolved is increased. The liquid distillate is cooled, depropanized* and sent to the hydrogenation unit. Coke from delayed coking (776 m tons/day) is stored for sale.

The combined distillate from distillation and delayed coking is hydrogenated (cracked to simpler hydrocarbons by heat in the presence of hydrogen). Hydrogenation takes place at 446 degrees C (835 degrees F), a pressure of 106.5 kg/cm^2 (1500 psig) and requires 0.3 m^3 of hydrogen per liter of distillate feed (1700 ft^3/bbl). Though it is not specifically stated by the Bureau of Mines, the low sulfur and nitrogen content of the upgraded oil indicates that catalytic hydrogenation was employed. The properties of this upgraded oil are shown as Stream 3 in Figure XII-1.

The gas streams from the hydrogenation and delayed coking units contain recoverable sulfur and nitrogen. In the

* The gaseous portion (that is, propane, C_3H_8 and lighter fractions) is removed.

Gas Combustion Retort process, as developed, these streams are water-washed twice in the gas treating unit. The first wash employs an ammonia solution which acts as an acid gas treatment, removing H_2S. The second wash uses water to remove the remaining ammonia. The sulfur and nitrogen is stripped and extracted as an H_2S-NH_3-water stream. This combined stream is separated in a recovery unit where, by heating to 77 degrees C (170 degrees F), the H_2S is driven off. Traces of ammonia are removed from this H_2S stream by sulfuric acid scrubbing. A Claus unit with a Beavon tail gas cleanup system is used in this analysis to recover sulfur from the H_2S. Note that this tail gas treatment would be incorporated into the Wellman-Lord system used on the power plant effluent. The ammonia solution is then pressurized to 17.2 kg/cm^2 (230 psig) and heated to 166 degrees C (330 degrees F) to liberate the anhydrous ammonia which is cooled, condensed and stored as a liquid for sale. The water is recirculated to the gas treating unit.

(4) Hydrogen Generation

About 89 percent of the washed gas from the gas treating unit is used to produce the hydrogen required for hydrogenation. Hydrogen is produced by steam reforming the gas at 4.5 kg/cm^2 (50 psig) and 760 degrees to 816 degrees C (1400 degrees to 1500 degrees F) over a nickel catalyst, followed by catalytic water gas shifting ($CO + H_2O \rightarrow H_2 + CO_2$) at 427 degrees C (800 degrees F), purification and compression. The remaining 11 percent of the gas, along with the retort gas, is used as a plant fuel.

(5) Steam and Power Generation

The steam and electric power requirements for the process are met by an on-site steam and power plant fired by the retort gas and the fuel gas from oil upgrading sections (the gas treating unit). The resultant stack gases contain significant SO_2, about 2.9 kg/10^6 kcal (1.6 lb SO_2/10^6 Btu) of fuel burned. The proposed sulfur limit in the effluent from fuel gas combustion is equivalent to 23 gms/100 m^3, (10 grains sulfur/100 ft^3) of fuel gas, requiring 83 percent stack gas cleanup. A Wellman-Lord system was arbitrarily applied for stack gas cleanup

in this analysis; this system should be capable of 90 percent removal.

(6) Energy Balance

The overall energy balance for the process is presented in Figure XII-1 and derived in Table XII-2. From this energy balance, the oil shale-to-shale oil process efficiency is found to be:

$$2913 \times 10^6 \text{ kcal/hr} \div 3000 \times 10^6 \text{ kcal/hr} = 74.7\%$$

(7) Sulfur Balance

The sulfur balance for the 0.6 percent sulfur content oil shale feedstock is quantified in Table III-3 and discussed in Section 3 of this chapter. Of the 16,683.4 kg/hr of sulfur

Table XII-3
Sulfur Balance for the Gas Combustion Retort Process

Carrier	Short tons/hr	kg/hr
Raw oil shale		
Organic sulfur 73,700 short tons/day ÷ 24 hr/day x .138 x .01	4.24	3,846.5
Pyritic sulfur 73,700 short tons/day ÷ 24 hr/day x .862 x .01 x $\frac{64.132S_2}{119.982FS_2}$	14.15	12,836.9
Total input	18.39	16,683.4
Elemental sulfur 84.4 short tons/day ÷ 24 hr/day	3.52	3,193.3
Spent shale		
Pyritic sulfur (as above)	14.15	12,836.9
Organic sulfur	0.50	453.6
Product shale oil	0.01	9.1
Sulfur vented to atmosphere		
From sulfur recovery	0.04	36.3
From stack gas cleanup	0.17	154.2
Total output	18.39	16,683.4

carried in the raw feed, about 77 percent appears in the mineral matter as pyrite (FeS_2), while the remaining 23 percent is organic sulfur. Only trace amounts of sulfur are present as sulfates.

All of the pyritic sulfur and about 12 percent of the organic sulfur reports to the spent shale which serves as minefill. Of the remaining 3392.9 kg/hr of sulfur, about 94 percent is recovered as elemental sulfur for sale, about 6 percent is vented to the atmosphere from the Claus and Beavon sulfur recovery and Wellman-Lord stack gas cleanup plants, and less than 0.03 percent remains with the product shale oil.

3. DISCUSSION OF POLLUTION CONTROL PROCESSES

The major waste streams of concern in the Gas Combustion Retort process for producing oil from shale, and their proposed control and treatment methods are summarized in Table XII-4.

(1) Shale Dust

Most of the shale dust is produced during the storing, crushing, and screening operations. The conventional

Table XII-4
Nature and Treatment of Major Waste Streams

Final Wastes	Sources	Treatment
Shale dust and particulates	Shale storage, crushing, briquetting, conveying	Cyclone separators, bag filters, enclosures
Spent shale	Retorting plant	Surface and mine disposal
Wastewater	Mining, retorting, oil upgrading	Biological and modified Chevron process, return to river and mine
Hydrogen sulfide (intermediate stream)	Distillation, delayed coking, hydrogenation	Claus and Beavon processes
Sulfur dioxide	Sulfur recovery, steam and power plant	Wellman-Lord and Beavon processes

technology of using cyclone separators, bag filters, and/or dust suppression with water along with enclosure of these operations are adequate to reduce emissions to below 16 kg/hr (35 lb/hr). This amounts to about 0.01 grains of particulate matter per cubic foot (about 23 x 10^{-6} kg/m^3). This is well below the EPA standard of 0.08 grains/ft^3 (183 x 10^{-6} kg/m^3) for incinerators.

Dust emissions can also occur due to wind, spillage, or process upsets during conveying operations. Enclosed conveyors and dust collectors at transfer points can minimize this potential problem.

(2) Spent Shale

Disposal methods for spent shale will vary depending on the type of mining system used.

For a 7.95 x 10^6 1/day (50,000 bbl/day) plant, 24.4 to 27.1 x 10^6 m tons of shale are required annually. This shale, having a mined volume of 11.3 to 12.7 x 10^6 m^3, after retorting has a volume of 17 to 19.8 x 10^6 m^3. Though compacting can reduce this volume to 12.7 to 14.7 x 10^6 m^3, the processed shale still occupies a greater volume than the original mined shale, so all of it cannot be returned to the mine.

The two most apparent methods for the disposal of the waste shale are:

- Surface disposal of all the spent shale
- Return of as much shale as possible to the voids left by mining with the excess spent shale sent to surface disposal.

About 10 to 20 percent (by weight) of water is added to the spent shale to reduce dusting and aid in the consolidation of disposal piles. Transport to the disposal area may be accomplished by hooded belt-conveyor or by a water slurry system.

The composition of the mineral content of the spent shale is shown as Stream B in Figure XII-1. Some components of the spent shale are significantly water soluble, indicating the need to guard against uncontrolled leaching. The natural hardening reaction, however, aided by moistening and compacting of the spent shale, results in a nearly impervious mass within a few days. The rapid hardening of the spent shale should minimize the natural pyrite weathering and resulting acidic water runnoff.

(3) Wastewater

Wastewater is an inherent by-product of oil shale retorting. For the size facility analyzed, between 0.55×10^6 and 1.36×10^6 1/day of retort wastewater can be expected. The upgrading of the raw shale oil generates about an additional 0.38 million liters of wastewater per day. The wastewater, contains a variety of organic and inorganic components. It is treated with lime, heated, and contacted with activated carbon and ion exchange resins. The composition of untreated and treated water is shown in Table XII-5.

Table XII-5
Untreated and Treated Wastewater

Component	Grams/Liter	
	Untreated Process Water	Treated Water
Ammonia	2.4	nil
Organic carbon (as complex mixture of amines, organic acids, organic bases, and neutral compounds)	2.5	nil
Organic nitrogen	1.0	nil
Sodium	0.5	0.06
Carbonate	20.8	0.18
Chloride	1.8	0.01
Nitrate	trace	nil
Sulfate	1.2	nil

* Source: The Shell Oil Company, "The National Energy Position," February 1972, p.22.

About 30 x 10^6 1/day of wastewater is expected to be generated from the underground mining operation. Approximately 50 percent of this water is of poor quality, most of which is used to wet the spent shale before disposal. The high quality water (2 to about 7 x 10^6 1/day) along with 6 x 10^6 1/day of poorer quality mine water is disposed of. The disposal of surplus poor quality water requires desalting, evaporation in impermeable ponds, or disposal by subsurface injection. This is considered part of the mining operation and does not affect the wastewater treatment requirements discussed here.

High quality water can be disposed of directly into a river. In many instances most of the available mine water will be of poor quality, requiring the high quality water needed for the plant to be supplied from some other source.

Blowdown from cooling towers and boilers, as well as sanitary sewage and run-off water, can be treated by a miscellaneous treatment section incorporating a sewage treatment plant. The only waste product discharged from this wastewater treatment stage will be an inert solid residue.

(4) Sulfur Recovery

Recovery of 64 m tons/day (70 short tons/day) of elemental sulfur from a stripped H_2S stream and from SO_2 recovered from tail gas cleanup is accomplished in a Claus and Beavon cleanup unit. It is assumed that 99 percent of the sulfur feed to the Claus unit can be recovered as elemental sulfur when using this tail gas cleanup system.

According to a Bureau of Mines report[2], H_2S is recovered in the gas treating section by using ammonia-water as the absorption medium. H_2S could have been also recovered by using a hot carbonate, MEA or DEA process or a solvent-based system such as an M-Pyrol, Rectisol, or Selexol process. A Stretford process could be used as an alternative to the Claus plant.

(5) Stack Gas Cleanup

The fuel gas generated by retorting, coking, and hydrogenating the product fuel, fires the boilers in the steam and power plant. This gas contains about 1000 ppm of H_2S and, therefore, requires stack gas cleanup following combustion. For this analysis, stack gas recovery was assumed to be accomplished by using the Wellman-Lord process. Although this process has yet to be tested in related applications, it is expected that this scheme will be demonstrated before the Gas Combustion Retort process is commercialized.

Several other processes, such as the Bureau of Mines' Citrate process, limestone injection, lime scrubbing, catalytic oxidation, and the double alkali process can also be used. A benefit of using the Wellman-Lord process is that it produces a concentrated SO_2 stream that may be used to oxidize the H_2S separated from the acid-gas during gas treatment scrubbing. Alternatively, the SO_2 may be reduced to elemental sulfur by the Allied process.

A further alternative, resulting in still lower overall plant emissions, is to use a more effective acid-gas treatment for the initial gas washing. As was indicated earlier, this process was demonstrated before the present concern for our environment. In this analysis (as in the other process synopses) the process itself was kept intact as designed, and the abatement processes were simply added. In this case, however, a more desirable alternative for cleaner emissions is to replace the ammonia-wash tower system with a more effective acid-gas treatment. With this substitution, the stack gas cleanup process would not be required, resulting in overall process economy.

4. COST OF CONTROL PROCESSES*

The costs of the pollution control and treatment processes described in the previous sections of this process synopsis are calculated here. The processes to extract oil from oil shale are still under development; thus, the cost figures reported here are based largely

* The costs presented here are preliminary estimates; the actual costs of emission control in this process will not be known until a full-scale facility has been constructed and operated.

on extrapolations from process development unit data and from related commercial experience. The major assumptions and conventions adopted are discussed in Chapter III. All by-product flow rate data presented in Figures XII-1 also apply.

The incremental* capital and operating costs for the control of potential pollutant and waste streams are presented in Tables XII-6 and XII-7. The incremental investment and operating costs are based on the control methods selected and described in Sections 2 and 3 of this chapter. The incremental capital investment of pollution control facilities using utility financing is $22.3 million; using the discounted cash flow (DCF) method, it is $23.6 million. The annual operating costs, after taking by-product credits for sulfur at $10/long ton and ammonia at $25/short ton, is about $1.7 million per year.

The derivation of the formulae for calculating the incremental cost of shale oil production due to pollution control is presented in Chapter III. For the DCF method of financial accounting, the required incremental annual cost of oil, X for the assumed rate of return is:

$$X = N + 0.23816\ I = 0.1275\ S + 0.23077\ W$$

where:

N = incremental net operating cost
I = incremental plant investment
S = startup costs
W = incremental working capital

For the utility financing cast it is:

$$X = N + 0.1198\ C + 0.0198$$

where:

C = required incremental capital investment
N = defined above
W = defined above.

The annual oil production rate is calculated on the basis of a 7.95×10^6 1/day (50,000 bbl/day) facility. The annual oil production, G, for this plant is:

---

* Incremental costs in this report refer to that portion of the total plant cost that is assignable to pollution control facilities.

Table XII-6
Incremental Capital Investment

Item	$ Million	
Incremental plant investment[b]		
Shale dust emission control	5.5	
Wastewater treatment	3.2	
Wellman-Lord SO_2 recovery	6.0	
Claus sulfur recovery with Beavon tail gas treatment	1.2	
Subtotal plant investment	15.9	
Project contingencies[c]	2.4	
Incremental plant investment (I)	18.3	18.3
Startup costs (S)[d]	0.6	0.6
	Utility	DCF
Interest during construction[e]	3.1	4.3
Incremental working capital (W)[f]	0.3	0.4
Incremental capital investment (C)	22.3	23.6

Notes:

a. Incremental plant investment, return on investment during construction, and working capital are treated as capital costs in year 0 (the year ending with completion of startup operation).

b. Installed costs, including engineering design costs, contractors' profit, and overhead.

c. Includes costs for unexpected site preparation and hardware requirements at 15% of plant investment.

d. At 20% of incremental gross operating cost.

e. For the DCF method, computed as the discount rate x incremental plant investment for 1.875 years' average construction period $I(1+i)^n - I(1.12)^{1.875} = 1.23676I$ or 0.23676 I additional investment.

For the utility financing method, computed as the interest rate on debt x incremental plant investment x 1.875 years.

f. Sum of materials and supplies at 0.9% of incremental plant investment and net receivables at 1/24 of annual incremental revenue.

Table XII-7
Incremental Annual Operating Cost

Labor	Dollars		
Direct operating labor (3 men/shift x $5/hr x 8304 shift hrs/man yr)	124,600		
Maintenance labor (1.5% of I)	274,500		
Supervisory (15% of direct operating and maintenance labor)	59,900		
Incremental labor cost		459,000	
Administration and general overhead (60% of incremental labor)		275,400	
Other direct costs*		1,500,000	
Supplies			
Operating (30% of direct operating labor)	37,400		
Maintenance (1.5% of I)	274,500		
Incremental cost of supplies		311,900	
Local taxes and insurance (2.7% of I)		494,100	
Incremental gross operating cost			3,040,400
By-product credits		247,600	
Sulfur (84.4 short tons/day x 365 days/yr x 0.9 capacity factor x $10/LT x 2000 LT/ 2240 short ton)			
Ammonia (138 short tons/day x 365 days/yr x 0.9 capacity factor x $25/short ton)		1,133,300	
Less by-product credits			-1,380,400
Incremental net operating cost (N)			1,659,500

*This item includes catalysts and chemicals expended and utilities purchased for the pollution control processes.

(50,000 bbl/day) (42 gal/bbl) (6.63 lb/gal) (19,925 Btu/lb)

(.9 capacity factor) (365 days/yr) = 91.13×10^{12} Btu/yr. or

23×10^{12} kcal/yr.

This is regarded as a typical production rate of a commercial oil shale-to-oil plant.

The incremental cost of oil due to pollution control is computed as:

$$\frac{\text{Annual Cost of Oil}}{\text{Annual Oil Production}} = \frac{X}{G} = \frac{X}{91.13 \times 10^{12} \text{ Btu/year}}$$

The solution of the above equation for the incremental cost of oil is shown in Table XII-8. When using the DCF method, the incremental cost of oil, as a result of the investment and operating expenses for the waste system controls, is 6.8¢/million Btu of oil produced. Using the utility accounting method, it is 4.8¢ / 10^6 Btu.

Table XII-8
Incremental Cost of Oil Due to Pollution Control for the Gas Combustion Retort Process

Accounting Method	Incremental Annual Cost of Oil ($/Yr.)	$/$10^6$ Btu
DCF	6,186,600	0.068
Utility financing	4,336,900	0.048

5. REFERENCES

(1) Environmental Statement for the Proposed Prototype Oil Shale Leasing Program, Volumes I, II, and III, U.S. Department of Interior, September 1972.

(2) Development of the Bureau of Mines Gas Combustion Oil Shale Retorting Process, Bulletin 635, Bureau of Mines, 1966.

XIII. THE LURGI PROCESS (AIRBLOWN GASIFIER)

Although it may be uneconomical to pump a low-Btu gas through pipelines, this type of gas is a valuable fuel for on-site electric power generation plants or for industrial use. As one would expect, the technology to develop a high-Btu or a low-Btu coal gasification process is similar. The Lurgi gasification process is a commercially available method to produce a low-Btu fuel gas with a heating value of 1800 to 4000 kcal/m^3 (200 to 450 Btu/ft^3). This gas is suitable for utility fuel, chemical synthesis or as a base for a substitute natural gas (SNG) as described in Chapter VI of this report.

The wide range in the heating value of the gas produced depends on whether air or oxygen is used to support combustion (provide the heat input, by carbon oxidation in the gasifier). The use of air dilutes the product gas with nitrogen and reduces its heating value. The basic Lurgi gasifier is a moving-bed type of reactor which can be considered to have three temperature zones though which the coal passes as it falls from the hoppers to the grates at the bottom of the gasifier. The topmost zone dries and preheats the coal by contact with the hot gases leaving the reactor. In the middle zone where the coal reaches 600 to 800 degrees C (1100 to 1500 degrees F), devolatilization and gasification occur. Steam is used to supply hydrogen for gasification. In the bottom reaction zone, a combustion zone, the carbon remaining in the coal char is reacted with air to supply the necessary heat for the endothermic gasification reactions occurring in the middle zone. The nominal operating pressure in the gasifier is 21 kg/cm^2 (300 psia).

The commercial application of this process, as mentioned in the description of the Lurgi process for manufacture of a high-Btu gas (Chapter VI) is presently limited to use of noncaking coals and to a specific range of coal particle size. However, recently completed development work on a modified Lurgi gasifier indicates that the Lurgi system might be adapted to accept mildly caking coals as well as coal fines, although perhaps with a decreased efficiency.

The only airblown Lurgi gasifier installed, built for STEAG at Lünen, West Germany, supplies a low-Btu fuel gas for a combined cycle power plant. This installation exemplifies a modern commercial

application of this process. Though it has had a protracted startup (about three years), the STEAG plant is understood to now be operational. This plant does not, however, contain sulfur removal processes.

Due to the general lack of accessible data on the Lurgi process, the quantitative design information on the pollution control aspects of the process published by the El Paso Natural Gas Company, as made public in their FPC filing, has been the primary source of data used in preparing the process summary.

1. PROCESS DISPLAY

A schematic flow diagram for the production of a low-Btu gas using the Lurgi process is shown in Figure XIII-1. Stream compositions and flow rates are given in Table XIII-1.

(1) Basis for Analysis

The purpose of this discussion is to evaluate the potential emissions from a possible low-Btu gas producing process utilizing a Lurgi gasifier. Emphasis is placed on final disposition of sulfur and the environmentally satisfactory utilization of process by-products.

The information contained in this process synopsis was developed from the open literature. The flow sheet (Figure XIII-1) is typical of a possible application of the process, and it indicates the approximate types and quantities of potential emissions that might be expected from this type of process.

Energy and material balances around the Lurgi gasifier, discussed in this report, were based upon process design work completed by the El Paso Natural Gas Company. The analysis shown is for a Navajo seam coal containing 0.69 percent sulfur (as received basis). Its composition is shown in Table XIII-2.

The process design with suggested effluent cleanup system presented in this report is based on a gross production of sufficient low-Btu product gas to manufacture a total of 32.8×10^9 kcal/day (130×10^9 Btu/day) of gas. Total production capacity is

FIGURE XIII-1
The Lurgi Process
(Airblown Gasifier)

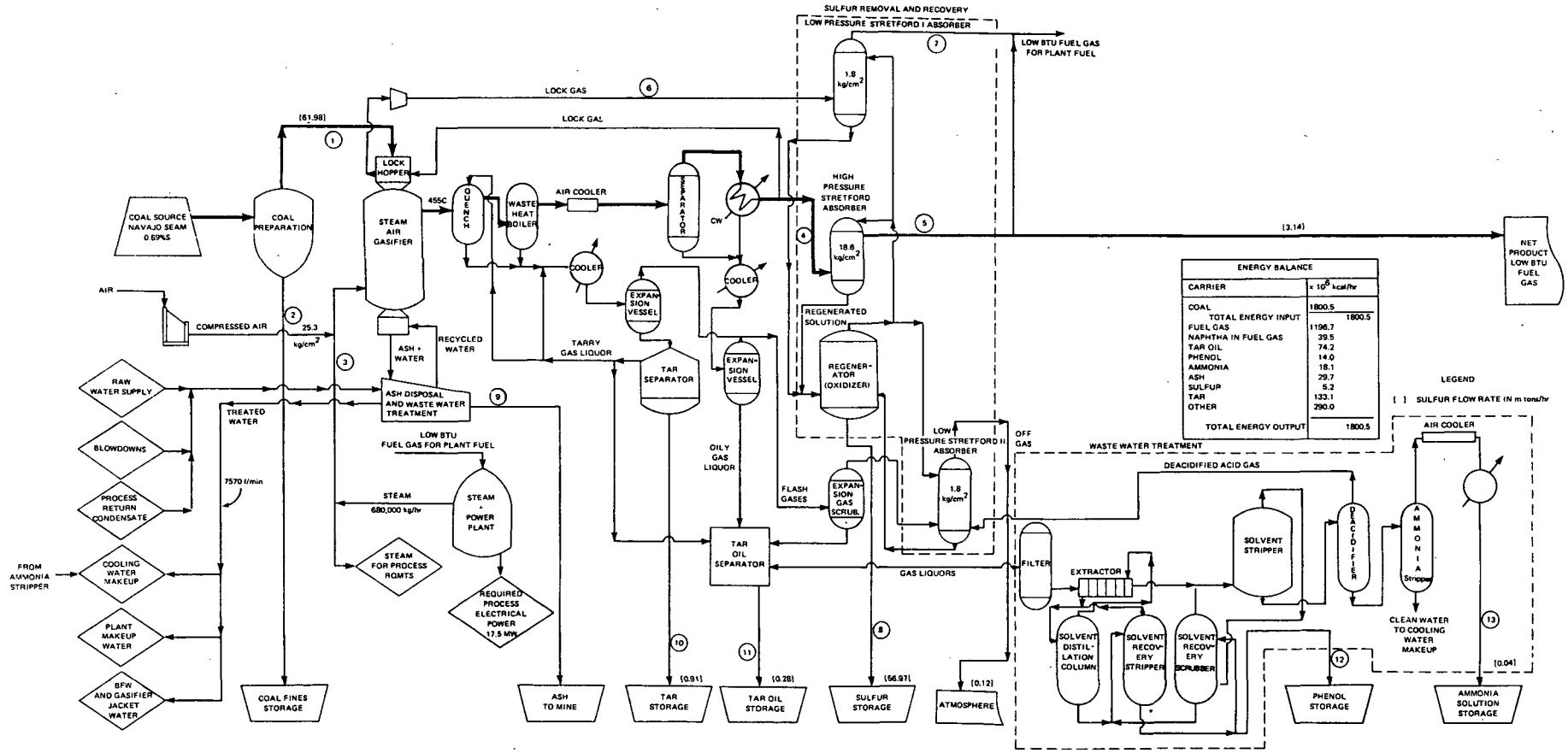

Table XIII-1
Stream Composition

Gas Components (Mole %)	Stream Numbers												
	1	2	3	4	5	6	7	8	9	10	11	12	13
CO_2				14.83	14.86	14.83	14.86						99.64
H_2S				0.23	0.01	0.24	0.06						0.36
C_2H_4				0.25	0.25	0.26	0.26						
CO				17.45	17.49	17.46	17.49						
H_2				23.26	23.31	23.27	23.31						
CH_4				5.08	5.09	5.07	5.07						
C_2H_6				0.38	0.38	0.37	0.38						
O_2		20.95		–	–	–	–						
N_2		79.05		38.52	38.61	38.50	38.57						
Total		100.00		100.00	100.00	100.00	100.00						100.00
Lb-moles/hr (dry gas)		36,437.1		73,756.3	73,595.0	1,071.9	1,070.0						29.2
Gm-moles/sec (dry gas)		4,591		9,293	9,273	135	135						4
Flow Rates lb/hr-(kg/hr)													
Water	133,987 (60,777)		513,390 (232,874)	3,322 (1,507)	3,322 (1,507)								28,733 (13,033)
Coal (MAF)	531,910 (241,274)								8,352 (3,788)				
Ash	158,771 (72,019)								158,771 (72,019)				
Tar										31,117 (14,115)			
Tar oil											17,022 (7,721)		
Phenol												3,949 (1,791)	
Ammonia													7,505 (3,404)
Sulfur								5,234 (2,374)					
Naphtha				8,511 (3,861)	8,511 (3,861)								
Total lb/hr (kg/hr)	824,668 (374,070)		513,390 (232,847)	11,833 (5,368)	11,833 (5,368)			5,234 (2,374)	167,123 (75,807)	31,117 (14,115)	17,022 (7,721)	3,949 (1,741)	36,238 (16,437)

Table XIII-2
Component Analysis (Dry Coal)

Component	Weight %
Carbon	58.73
Hydrogen	4.30
Nitrogen	1.02
Sulfur	0.82
Oxygen	12.12
Trace compounds	0.02
Ash	22.99
Total	100.00

0.81×10^6 m^3/hr (28.25×10^6 ft^3/hr) of 1726 kcal/m^3 (194 Btu/ft^3) gas. About 20 Lurgi gasifiers are required for this production rate. Approximately 10 percent of the fuel output is required for necessary steam and electricity generation yielding a net output of about 30×10^9 kcal/day (117.7×10^9 Btu/day). This quantity of gas, if burned under boilers, could produce about 550 MW of electrical power. The net coal-to-gas thermal efficiency of the plant is determined to be 66.5 percent.

(2) Layout and Symbols

The general direction of process flow shown in Figure XIII-1 is from the coal supply on the left to the product gas on the extreme right of the flow design, with residuals and by-products shown along the bottom. The bold line indicates the flow of the primary gasification process. The encircled figures refer to the stream compositions shown in Table XIII-1. The overall energy balance is shown in Table XIII-3 and in Figure XIII-1.

Table XIII-3
Energy Balance

Carrier	Energy			
	x 10^6 Btu/hr		x 10^6 kcal/hr	
Input				
Coal (824,668 lb/hr x 8664 Btu/lb)		7144.9		1800.5
Output				
Fuel gas (27.863 x 10^6 ft^3/hr x 194 Btu/ft^3)	5416.6		1365.0	
Lock gas (.405 x 10^6 ft^3/hr x 194.2 Btu/ft^3)	78.7		19.8	
	5495.3		1384.8	
Fuel gas for plant fuel	- 746.5		- 188.1	
Net fuel gas		4748.8		1196.7
Naphtha in fuel gas (8811 lb/hr x 18,400 Btu/lb)		156.6		39.5
Tar oil (17,022 lb/hr x 17,300 Btu/lb)		294.5		74.2
Phenol (3949 lb/hr x 14,021 Btu/lb)		55.4		14.0
Ammonia (7505 lb/hr x 9598 Btu/lb)		72.0		18.1
Carbon content of ash (8352 lb/hr x 14,086.8 Btu/lb)		117.7		29.7
Sulfur (5234 lb/hr x 3983.4 Btu/lb)		20.8		5.2
Tar (31,117 lb/hr x 16,970 Btu/lb)		528.1		133.1
Losses*		1151.0		290.0
		7144.9		1800.5

*Includes heat losses through air and water cooling, sensible heat of product, by-products and waste streams, and other unaccounted losses.

Rhombic-shaped units represent intermediate products (such as boiler feed water), process needs (such as electric power and steam), and sources (such as process return water), for which the distribution is not shown. Nonintegral pollutant cleanup processes are indicated by sloping rectangles. The extensive treatment and recovery processes which this symbol represents are discussed in the process description and pollution control sections of this process summary. For a thorough in-depth explanation of each licensed cleanup process mentioned, the reader is referred to readily available process literature and the bibliography included in this report. Inverted trapezoids denote residual storage.

2. PROCESS DESCRIPTION

The specific steps in the Lurgi process for production of low-Btu gas are discussed below; the generation and disposition of pollutant streams are also discussed where appropriate. The gross gas production rate is about 678 x 10^6 ft^3/day of gas containing 194 Btu/ft^3. After consuming about 10 percent of the gross output as plant fuel in the necessary utilities (e.g., raising of steam), the net gas supply is about 30 x 10^9 kcal/day (117 x 10^9 Btu/day), including the heat content of naphtha in the gas.

(1) Coal Preparation

Coal feed for the Lurgi gasifier is crushed and dried to a size range of 0.3 to 3.2 cm (1/8 to 1-1/4 inches). Any coal fines generated during the crushing and drying steps can be washed and sold.

(2) Gasification

Treated coal is fed to the top of the gasifier by means of lock hoppers using pressurized product gas for pneumatic transport. The lock hopper gas is recovered (stream 6), desulfurized and used as plant fuel. A coal lock feeds the coal into the gasification reactor where it is uniformly spread on top of the moving bed by a rotating distributor. Normal residence time for the coal in the gasifier is approximately one hour. A revolving grate at

the base of the gasifier supports the fuel bed, removes the ash into a lock hopper, and allows introduction of steam (stream 3) and air (stream 2) to the gasifier. Solids and gases move through the reactor in a countercurrent fashion. About 20 Lurgi gasifiers are required for the 32.8 x 10^9 kcal/day (130 x 10^9 Btu/day) production.

Char leaving the middle reactor zone is burned with incoming air to supply heat required for the endothermic gasification reactions in the upper parts of the reactor. Hydrogen for gasification is supplied by reduction of steam with the carbon in the coal ($2H_2O + C \rightarrow 2H_2 + CO_2$) in the temperature zone between 595 and 815 degrees C (1100 and 1500 degrees F). Crude product gas, after heat exchange with the incoming coal, leaves the gasifier at 455 degrees C (850 degrees F). In addition to CO_2, CO, CH_4 and H_2, the gas leaving the reactor contains carbonization products such as tar, oil, naphtha, phenols and ammonia. The gas also contains coal and ash particulates plus traces of hydrogen sulfide and carbonyl sulfide.

(3) Gas Quench and Cooling

Hot crude gas leaving the gasifier is cooled rapidly by quenching with a recycle gas liquor spray (an aqueous stream produced by quenching and cooling hot gases). The gas is further cooled in a waste heat boiler to produce 2.1 kg/cm^2 (15 psig) steam, then by air coolers, and finally by heat exchange with cooling water.

(4) Gas Purification

Removal of the hydrogen sulfide from the Lurgi product gas will produce a fuel gas containing about 140 ppm sulfur, primarily in the form of COS.* It is proposed to remove H_2S through use of a pressurized Stretford process operating at 18.6 kg/cm^2 (265 psia). Normal pressure for the Stretford

* This COS content is contingent upon use of the low sulfur coal selected for this analysis.

process is 1.8 kg/cm^2 (25 psia) except in some applications in gas fields. The Stretford absorber solution contains the active ingredients of Na_2CO_3, Na_2VO_3, and an organic oxidation catalyst. The absorption is specific for H_2S; however, the process does not remove the COS or CO_2 from the gas. Carbon dioxide need not be removed from the gas but additional removal of COS would be desirable so that the combustion products from burning this gas would contain minimal sulfur emissions. The concentration of hydrogen sulfide in the treated gas (stream 5) is expected to be about 10 ppmv, and well below the range where its contribution of sulfur in the combustion products would be meaningful.

Regeneration of the Stretford solution with air ($2H_2S + O_2 \rightarrow 2H_2O + S$) recovers the sulfur and no tail-gas cleanup system is required. Regenerated solution is recycled to the absorber.

(5) Water Supply

Makeup water to the system could be supplied by wells, surface streams, or reservoirs. Definitive water requirements could not be determined from the source documents available but are expected to be about 2000 gpm. Conventional water treating techniques are used to make high purity boiler feed waters and other makeup waters for plant needs. Particulate laden water from the reactor and from other blowdowns is treated to remove the ash and to recycle the water where possible.

(6) Utility and Power Generation

Air required for the gasifier is compressed in three stages: to 6.3 kg/cm^2 (90 psia) in the first two stages, and 25.3 kg/cm^2 (360 psia) in the third stage.

Steam and power required for the production of fuel gas are generated on site. The specific steam and power requirements could not be determined from available sources but are estimated to be about 0.68×10^6 kg/hr of steam (1.5×10^6 lb/hr) and 17.5 MW of electricity for this facility. The steam required for gasification is identified by stream 3. About 10 percent of the fuel gas and naphtha produced (stream 5) and the desulfurized

gas identified as stream 7 (primarily lock hopper gas) is utilized for the generation of steam and power.

(7) Energy Balance

The energy balance for the process is presented in Table XIII-3. The overall efficiency, which includes by-product heat credit (e.g., tar, oil, sulfur, ammonia, etc.), is about 82 percent for the process; the coal-to-fuel gas efficiency is about 68.7 percent, including the naphtha, and 66.5 percent without it (net). If the tars and oils are hydrotreated to produce light oils, then the overall efficiency will drop below 82 percent.

(8) Sulfur Balance

The sulfur balance for the Lurgi process flow sheet shown in Figure XIII-1 is reported in Table XIII-4. The majority of the sulfur in the coal feed leaves the gasifier as H_2S with about 6 percent COS, CS_2 and organic sulfur such as thiophene. Most of that sulfur is recovered as elemental sulfur in the Stretford unit where sulfur recovery is 93.8 percent of the sulfur fed to the units (92 percent of the sulfur in the sized coal feed). Approximately two percent of the sulfur fed with the coal remains with the tar and tar oil products. Less than 0.8 percent of the total sulfur feed is discharged to the atmosphere in the fuel supplied to the plant utilities; another 0.2 percent of the feed sulfur is discharged with a CO_2-rich gas (low pressure Stretford II absorber off-gas containing 0.12 m ton/day sulfur).

3. DISCUSSION OF POLLUTION CONTROL PROCESSES

There are two approaches to define the pollution control processes in low-Btu systems such as the one described in this chapter. One approach considers the entire gasification process—from coal handling through gas purification—as pollution control. The rationale used is that the primary reason for installing the process is to consume coal in a more environmentally satisfactory manner. This approach was used in the process synopses of this report where direct combustion or indirect combustion (low-Btu gasification and desulfurization) of coal or char were used.

Table XIII-4
Sulfur Balance
(29.7×10^9 kcal/day Plant - Net)
(117.7×10^9 Btu/day)

Carrier	Sulfur (Lb/Hr)	Sulfur (Kg/Hr)	Sulfur Distribution %
Input			
Coal	5691.5	2581.7	100.00
Output			
Fuel gas	288.4	130.8	5.07
Tar	84.0	38.1	1.47
Tar oil	25.5	11.6	0.45
20% Ammonia solution	3.8	1.7	0.07
Elemental sulfur (recovered from Stretford I sulfur plant)	5233.3	2373.8	91.95
Sulfur discharged to atmosphere from required utilities	45.3	20.6	0.79
Sulfur compounds discharged to atmosphere from Stretford II plant	11.2	5.1	0.20
	5691.5	2581.7	100.00

Note:
Sulfur dioxide emitted from combustion of product fuel gas:

$$\frac{288.4 \text{ lb/hr} \times \dfrac{64.066 \text{ lb } SO_2}{32.066 \text{ lb S}}}{\text{4905.4 million Btu/hr of fuel gas and naphtha}} = \begin{array}{l} 0.117 \text{ lb } SO_2/10^6 \text{ Btu or} \\ (0.211 \text{ kg } SO_2/10^6 \text{ kcal}) \end{array}$$

The alternative approach to define which are pollution control portions of low-Btu gas manufacturing schemes is based on the assumption that the product gas is a superior fuel to the original coal feed and would be manufactured for that reason. As high-temperature gas turbines are developed for use in combined cycle power generation, this argument becomes more valid. In this case, gasification permits utilization of coal in more efficient power plants. Using this definition, the pollution control processes are considered to include

only those unit processes performing sulfur removal and recovery functions, wastewater treatment, ash disposition, and recovery of fines generated in the coal crushing circuit. This approach was used in this synopsis.

The major waste streams generated in the low-Btu Lurgi gasification scheme of Figure XIII-1 are presented in Table XIII-5. The sources of the potential pollutants and their treatment to minimize emissions from the process are also presented in that table and are further discussed here.

Foul water streams known as gas liquors are separated from the primary gas process stream by condensation during cooling. The primary difference between the tarry gas liquor and the oily gas liquor is the temperature at which they are condensed. The higher temperature condensate (the tarry gas liquor) is condensed with the high-molecular-weight tars from the quench tank and waste heat boiler downstream of the gasifier. The tars are decanted, recovered and sold for their by-product value. The tarry gas liquor is recycled, after cooling, as scrub liquor for the quench tank, and a portion is withdrawn to the tar-oil separator where it blends with the oily gas liquor. The oily gas liquor condenses out of the gas stream with the lower-molecular-weight tar oils during air and water cooling. While the tar oils are recovered for their by-product value (stream 11), the oily gas liquor proceeds to wastewater treatment. The systems to this point are not considered "emission control" because cooling is required in the basic process; the tars and oils would normally be recovered for their by-product value regardless of environmental considerations. However, the gas liquors from this operation must be further treated because of the phenol, sulfur, ammonia, cyanide, and other contaminants present.

The flash gases from the gas liquor expansion vessels will contain hydrogen sulfide, carbon dioxide, as well as some fuel gases that were dissolved in the liquor. These fuel gases are sent to sulfur recovery (discussed later).

The gas liquors, after expansion for flash gas recovery and decantation for tar and tar oil recovery, are transferred to the phenol recovery section. Here, the gas liquor is solvent-extracted in a Lurgi Phenosolvan process to recover the phenols for their by-product value (stream 12).

The dephenolated gas liquor, after solvent stripping, passes through a deacidifier where acid gases such as H_2S and HCN are removed. The deacidified acid gases are sent to the low pressure

Table XIII-5

Wastes, Their Amounts, Sources, and Treatments for a Coal to Low-Btu Fuel Gas Plant

Final Wastes	Amounts	Sources	Treatment
Coal fines		Coal feed, crushing handling, etc.	Cyclone separators, bag filters, scrubbing or washing, etc.
Ash	75, 807 kg/hr (167, 123 lb/hr)	From gasifiers	Sluice way and return to mine for land fill.
Gas liquor	31, 942 kg/hr (59, 593 lb/hr) tar, tar oil, phenols, ammonia, H_2S, etc.	Quenching and gas cooling system	Using gas liquor separation system, phenol extraction system and gas stripping system.
Hydrogen sulfide, carbonyl sulfide and carbon disulfide	2462.4 kg/hr* (5521.7 lb/hr)*	With the fuel gas	Sulfur is recovered using the pressure Stretford process. COS and CS_2 are not recovered; 5.3 kg/hr (11.7 lb/hr) of sulfur is emitted to the atmosphere.
Sulfur dioxide	About 20.9 kg/hr (45 lb/hr) of sulfur	Gas-fired turbines, boilers, heaters, incinerators	None

*Intermediate waste stream

Stretford (II) unit for sulfur recovery, cyanide conversion and are then vented (off-gas) to the atmosphere. The deacidified gas liquor is next steam-stripped to recover a by-product ammonia solution for sale (stream 13). The treated gas liquor should now contain only small ppm quantities of phenols, cyanides, and sulfur and should be a satisfactory input to the plant cooling water circuit where the remaining impurities would be destroyed by natural biological oxidation.

The ash collected from the gasifiers should be low in carbon content and contain almost none of the original sulfur from the feedstock. That sulfur which is still present is firmly bound into the organic lattice of the remaining carbon. The ash is quenched with recycled water from the waste treatment area and slurried through a system of solids dewatering equipment. The water is recycled to wastewater treatment and the ash is returned to the mine for disposal (stream 9).

The Lurgi gasifier will not accept coal fines less than 2 mm in size. In other process synopses in this report, fines were generally minus 200 mesh and became airborne during coal grinding. In this case, however, the majority of the fines are much larger (and could, in fact, be used as a feed in most other process gasifiers). As much as 25 to 40 percent of the initial, "as mined" coal will fall into this size range and must be disposed of (e.g., sold) or briquetted with coal tar and then gasified.

In the process described here, sulfur removal from the main process gas stream and elemental sulfur recovery are achieved in the same unit process - a high-pressure Stretford system. In most of the other processes described in this report, the sulfur (and perhaps the carbon dioxide) were removed from the process gas stream by an acid-gas treatment system and then the sulfur was separated in a recovery system. In this Lurgi low-Btu gas process, however, complete removal of the sulfur is not required and removal of carbon dioxide was not desired (some of this process gas will be used in gas turbines to raise power and the carbon dioxide represents mass at pressure that can be used to drive turbines and generate power).

The Stretford system removes hydrogen sulfide, hydrogen cyanide (if hydrogen sulfide is present), but not carbonyl sulfide, carbon disulfide, or other organic sulfur compounds. Similarly, carbon dioxide is not attacked as in many other sulfur removal processes.

Of the total sulfur fed to the facility in the sized coal (2581.7 kg/hr), 51.4 kg/hr appears in the liquid by-product streams and 2530.3 kg/hr or 98 percent appears in the gases. Of this quantity, 2373.8 kg/hr is recovered as elemental sulfur and 156.5 kg or 6.2 percent of the gaseous sulfur is not recovered by the Stretford system and remains in the gas as COS, C_2S, etc. The concentration of this unrecovered sulfur in the fuel gas is 139 ppmv.

Of the total quantity of fuel gas manufactured, a significant quantity exists at low pressure from lock gases (stream 6). The lock gas has a heating value similar to the primary gas stream and it should be desulfurized for use. Rather than recompress this gas back to the gasifier system pressure, one of the absorbers in the Stretford system was operated at low pressure (low-pressure Stratford I absorber). Similarly, the deacidification off-gas and the expansion gases from the gas liquors contain sulfur that should be removed before these gases are vented. Another low-pressure Stretford absorber is used to treat these gases (low-pressure Stretford II absorber). The combined rich liquor from all three Stretford absorbers in this process are oxidized for sulfur recovery in a single unit (stream 8).

Most of the effluent from the high-pressure Stretford unit makes up the low-Btu product gas. However, a small side stream is routed to the low-pressure fuel product (stream 7) to supply the energy requirements for the utilities of the facility. Approximately 10 percent of the total energy output is used for this purpose. The total sulfur emitted to the atmosphere during on-site combustion of this captive utility fuel gas is 90.6 lbs SO_2 per hour (41.1 kg/hr) or 0.117 lbs SO_2 per million Btu consumed within the process (0.211 kg/10^6 kcal).

The net plant gas output, when consumed, will emit 576.2 lbs SO_2 per hour to the atmosphere (261.4 kg/hr) or about 0.211 kg SO_2/million kcal (0.117 lbs SO_2 per million Btu). This level of sulfur emission, of course, is related to the low sulfur content of the coal feeding this facility. If a higher sulfur feed (e.g., Eastern coal) were used, the low-Btu product gas may contain up to 900 ppm sulfur (0.75 lbs $SO_2/10^6$ Btu or 1.35 kg/10^6 kcal). These emissions, even with high sulfur coal feedstock, compare favorably to the present Federal standards for direct combustion of coal of 2.16 kg $SO_2/10^6$ kcal of fuel burned (1.2 lbs $SO_2/10^6$ Btu).

4. COSTS OF POLLUTION CONTROL*

The costs of pollution control are dependent on which of the two definitions are used for pollution control facilities. Under the first assumption discussed in the section above, the entire process is considered as pollution control since it permits the combustion of coal.

Under the second assumption discussed above, only specific operations within the facility are considered as pollution control. The capital investment of these pollution control and sulfur treatment processes was based on an economic evaluation made by Stearns-Rogers, Inc., for the El Paso Natural Gas Company's SNG Lurgi plant (reference 1). The investment and operating costs for the gas liquor separation, extraction and stripping sections, as well as the sulfur recovery section, are based on the amount of coal going to the airblown gasifier in the El Paso plant. For a Lurgi plant producing 130 billion Btu/day (gross) of utility gas, the incremental** investment costs for the pollution control and treatment process are given in Table XIII-6 and the detailed operating costs are given in Table XIII-7.

For the discounted cash flow method (DCF), the required incremental annual cost of gas, X, for the assumed rate of return is:

$$X = N + 0.23816I + 0.1275S + 0.23077W$$

where

N = Incremental net operating cost
I = Incremental plant investment
S = Startup cost
W = Incremental working capital.

---

* The costs presented here are preliminary estimates; the actual costs of emission control in this process will not be known until a full-scale facility has been constructed and operated.

** Incremental costs in this report refer to that portion of the total plant cost that is assignable to pollution control facilities.

Table XIII-6
Incremental Capital Investment ($1000)
(117.7 Billion Btu/Day Net Plant)

Item	$ Thousand	
Fuel gas treating	6,188	
Gas liquor separation	2,682	
Phenol extraction	3,349	
Gas liquor stripping	2,918	
Sulfur recovery	3,916	
Subtotal plant investment	19,053	
Project contingencies	2,858	
Incremental plant investment (I)	21,911	21,911
Startup costs (S)	533	533
	Utility	DCF
Interest during construction	3,697	5,188
Incremental working capital (W)	350	439
Incremental capital investment	26,491	28,071

For the utility financing case, it is

$$X = N + 0.1198C + 0.0198W$$

where

C = Required incremental capital investment
N = Incremental net operating cost
W = Incremental working capital

Table XIII-7
Incremental Annual Operating Cost ($)
(117.7 Billion Btu/day (Net), 90% Stream Factor)

Item	Cost ($)	
Direct operating labor (6 men/shift x $5/hr x 8,304 hr/year	249,000	
Maintenance labor (1.5% of I)	329,000	
Supervision (15% of direct operating and maintenance labor)	87,000	
Incremental labor cost	665,000	665,000
Administration and general overhead (60% of incremental labor)	399,000	399,000
Other direct costs	1,233,000	603,000
Supplies		
Operating (30% of direct operating labor)	75,000	
Maintenance (1.5% of I)	329,000	
Incremental cost of supplies	404,000	404,000
Local taxes and insurance (2.7% of I)	592,000	592,000
Incremental gross operating cost		2,663,000
By-product credits		
Crude phenol (3949 lb/hr x 24 x 328.5 x $ .04/lb)	1,245,000	
Sulfur ($\frac{5234}{2240}$ LT/hr x 24 x 328.5 x $10/LT)	184,000	
Ammonia ($\frac{7505}{2000}$ ton/hr x 24 x 323.5 x $25/ton)	740,000	
	2,169,000	(2,169,000)*
Operating Cost		494,000

*By-product credits are not allowed for tars and tar oils since these are recovered during gas cooling (defined as a requirement of the basic process scheme - not a pollution control). Simiarly coal fines are screened out as a process requirement and therefore by-product credits obtained from their sale should not be used to effect the cost of pollution control.

Annual gas production

$$G = (474.8 \times 156.6) \times 10^6 \text{ Btu/hr} \times 24 \times 328.5$$

$$= 38,674,174 \times 10^6 \text{ Btu/year}$$

Therefore, the incremental cost of gas due to pollution control is

$$\frac{X}{G} = \frac{\text{Annual incremental cost of gas}}{\text{Annual gas production}}$$

The incremental cost of gas due to pollution control is shown in Table XIII-8. These costs do not include by-product credit for tar and tar oil. However, if these by-product credits are taken, then the costs given will be reduced from 15.2¢/10^6 Btu to 6.7¢/10^6 Btu in the case of the DCF method, and from 9.5¢/10^6 Btu to 1.1¢/10^6 Btu in the case of the utility method.

5. REFERENCE

(1) Second supplement to Application of El Paso Natural Gas Company for a Certificate of Public Convenience and Necessity, prepared by Stearns-Roger, Inc., FPC Docket No. CP-73-131, October 8, 1973.

Table XIII-8
Incremental Cost of Gas
(117.7 Billion Btu/Day (Net) Plant)

Accounting Method	Incremental Annual Cost of Gas ($/yr)	Incremental Cost of Gas ($/$10^6$ Btu)
DCF	5,881,000	.152
Utility	3,675,000	.095

XIV. THE U-GAS PROCESS

The U-Gas process is a system being developed by the Institute of Gas Technology (IGT) for the fluid-bed gasification of coal with steam and air (or oxygen), to produce a low-Btu utility fuel gas. Advanced R&D and pilot plant scale studies for development of the U-Gas concept are the subject of proposals now pending before various agencies.

The U-Gas process will produce a gas with heating value ranging from about 150 to 300 Btu/ft^3* (1335 to 2670 kcal/m^3), depending on whether air or oxygen is used as the gasifying reactant.

Preliminary designs have been developed for a plant which will produce a low-Btu fuel gas to serve an electrical generating plant for use in two possible applications:

- Production of low-Btu gas to use as feed in a combined cycle power station, anticipating that high-temperature gas turbines for use in a combined cycle operation will be commercially available in the next ten years. (The flow sheet for this process is given in Figure XIV-1.) For this application an airblown gasifier may be employed because nitrogen dilution is not detrimental. However, the gas must be delivered at elevated pressure, requiring high pressure desulfurization. Ideally, the water vapor and carbon dioxide in the raw gas should not be removed because they represent mass, at elevated temperature and pressure, that may be utilized as motive power to help drive the turbines.

- Production of low-Btu gas to be used as fuel for large industrial users or conventional electrical generating facilities. (The flow diagram for this application is given in

* Throughout this synopsis, ft^3 refers to one cubic foot when measured at standard conditions of 60 degrees F, 30" Hg and saturated with water.

FIGURE XIV-1
The U-Gas Process—Combined Cycle Case

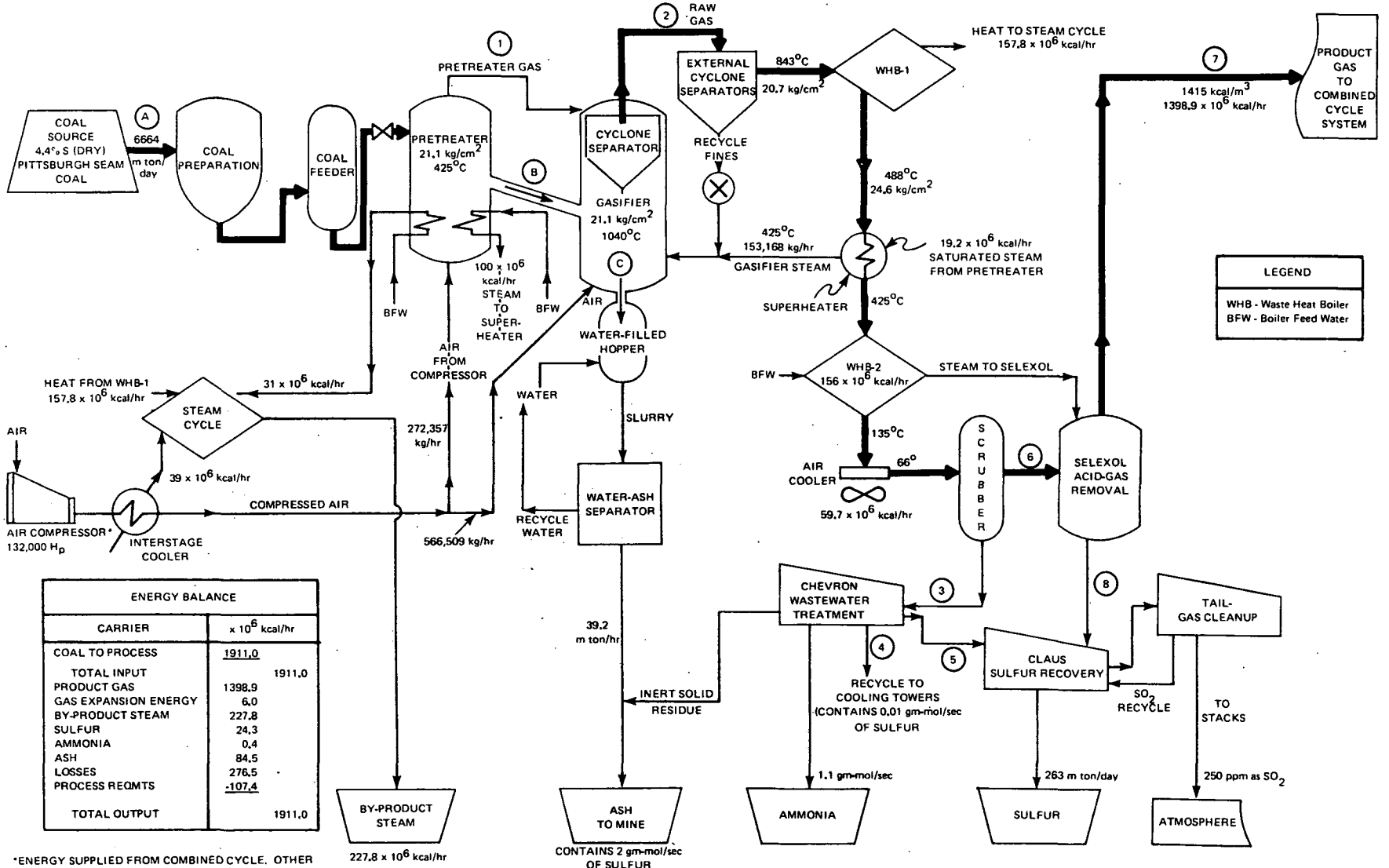

ENERGY BALANCE	
CARRIER	x 10^6 kcal/hr
COAL TO PROCESS	1911.0
TOTAL INPUT	1911.0
PRODUCT GAS	1398.9
GAS EXPANSION ENERGY	6.0
BY-PRODUCT STEAM	227.8
SULFUR	24.3
AMMONIA	0.4
ASH	84.5
LOSSES	276.5
PROCESS REQMTS	-107.4
TOTAL OUTPUT	1911.0

*ENERGY SUPPLIED FROM COMBINED CYCLE. OTHER PLANT POWER REQUIREMENTS INCLUDING PUMPS, TURBINES, FANS, ETC., UTILIZING ENERGY FROM COMBINED CYCLE AMOUNT TO 25,593 kWh/hr.

Figure XIV-2.) An oxygen-blown gasifier is employed in this case to provide a richer gas. High pressure is not required, so the gaseous product may be desulfurized at near-ambient pressure conditions.

1. PROCESS DISPLAY

The schematic flow diagrams and energy balances for the two applications of the U-Gas process described in this chapter are shown in Figures XIV-1 and XIV-2. The stream compositions and flow rates are presented in Tables XIV-1 and XIV-2.

(1) Basis for Analysis

The process flow sheet data, stream compositions and flow rate data presented in this synopsis were modified from input developed by the process developer, IGT.

The two applications of the U-Gas process described here include the production of a low-Btu gas in an oxygen-blown gasifier to be used as fuel by industrial users or to raise steam in a conventional steam power plant (the fuel gas case) and the production of a low-Btu gas in an airblown gasifier for use in a combined cycle power station (the combined cycle case). In both cases, the feed for the process is 7346 tons/day (6664 m tons/day) of coal (as received at 6 percent moisture by weight). This amount is sufficient to generate approximately 1000 MW (gross*) of electrical power in the combined cycle scheme. Data are based on the use of Pittsburgh Seam coal, which contains 4.4 percent sulfur (dry basis) and has a heating value of 12,388 Btu/lb or 6882 kcal/kg. The composition of this coal is given in Table XIV-3.

---

* The net power output of this facility would be about 5 percent lower due to energy requirements fed back to the combined cycle system.

FIGURE XIV-2
The U-Gas Process—Fuel Gas Case

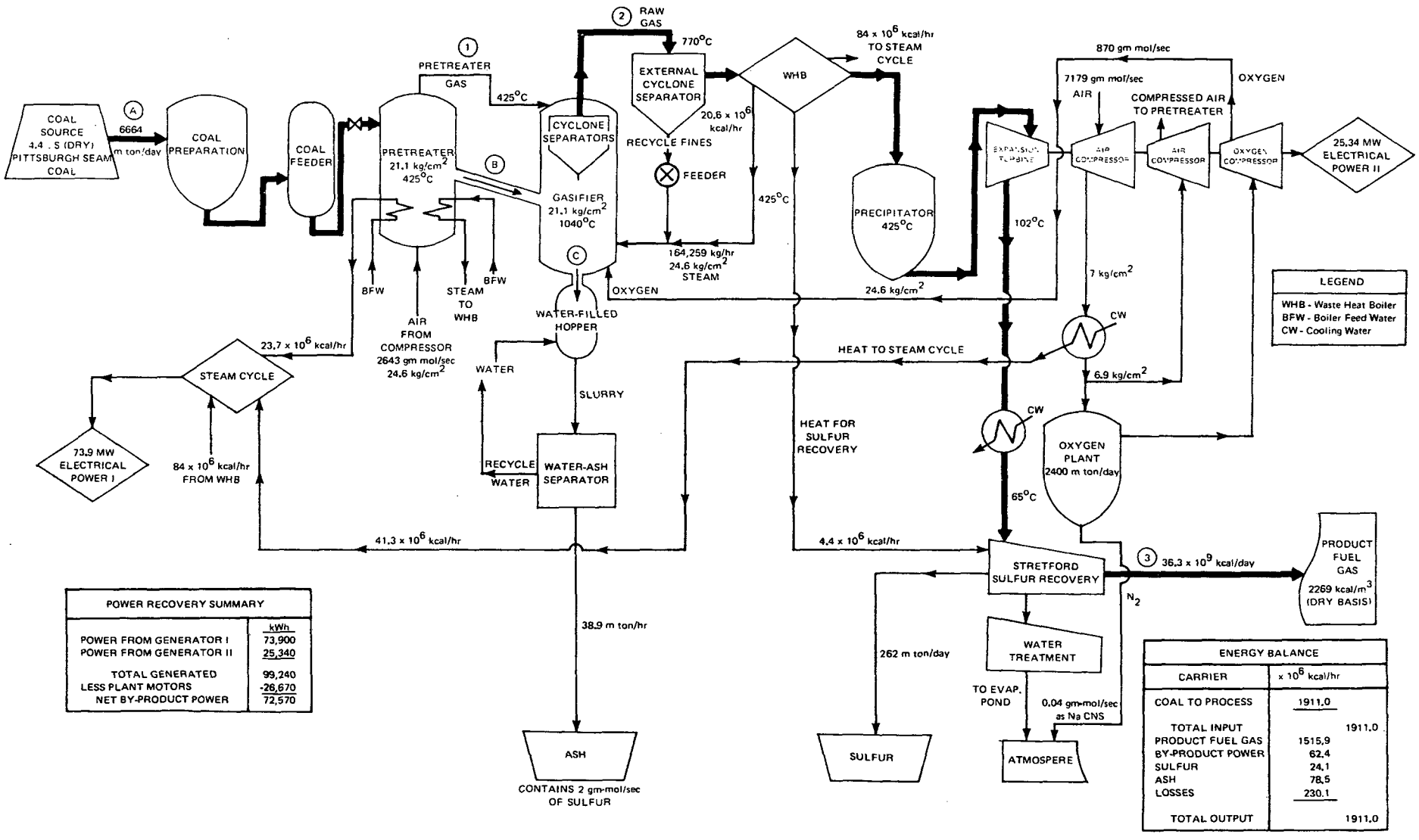

POWER RECOVERY SUMMARY	kWh
POWER FROM GENERATOR I	73,900
POWER FROM GENERATOR II	25,340
TOTAL GENERATED	99,240
LESS PLANT MOTORS	-26,670
NET BY-PRODUCT POWER	72,570

ENERGY BALANCE		
CARRIER	x 10^6 kcal/hr	
COAL TO PROCESS	1911.0	
TOTAL INPUT		1911.0
PRODUCT FUEL GAS	1515.9	
BY-PRODUCT POWER	62.4	
SULFUR	24.1	
ASH	78.5	
LOSSES	230.1	
TOTAL OUTPUT		1911.0

Stream Description	Coal Feed	Pretreated Char	Ash
Stream Number	A	B	C
kg/hr	277,667	238,296	39,212
Component	wt % (dry)	wt % (dry)	wt % (dry)
C	71.5	71.25	20.33
H	5.00	4.02	1.43
O	6.50	7.50	–
N	1.20	1.00	1.78
S	4.40	3.74	0.58
Ash	11.4	12.49	75.88
	100.00	100.00	100.00

Table XIV-1
Stream Composition—Combined Cycle Case

Stream Description	Pretreater Gas		Raw Gas		Water to Waste Water Treatment		Water Effluent		To Sulfur Recovery		Gas to Selexol		Selexol Effluent		H_2S Off-Gas	
Stream Number	1		2		3		4		5		6		7		8	
Temperature, °C	427		843				38		38		38		38		93	
Pressure, kg/cm^2	21.1		21.1						1.4		20.0		19.7		1.4	
Component	mol %	lb/mol/hr	mol %	lb/mol/hr	mol %	lb/mol/hr	mol %	lb/mol/hr	mol %	lb/mol/hr	mol %	lb/mol/hr	mol %	lb/mol/hr	mol %	lb/mol/hr
CO	2.91	735	16.97	18,595	0.02	2			15.04	2	19.22	18,593	20.16	18,593	75.84	---
CO_2	7.97	2,011	8.77	9,609	0.06	8	0.05	6	15.04	2	9.93	9,601	6.72	6,198		3,403
H_2	---	---	11.58	12,686	0.04	5			37.58	5	13.11	12,681	13.75	12,681	7.31	---
H_2O	23.02	5,806	12.00	13,148	99.77	12,820	99.95	12,820		---	0.34	328		---	0.02	328
CH_4	0.46	115	4.12	4,516	0.02	2			15.04	2	4.67	4,514	4.89	4,513		1
N_2	64.66	16,311	45.85	50,246	0						51.94	50,246	54.47	50,246		---
NH_3			0.01	9	0.07	9	---	5 ppm		---						
HCN				0.3		0.3		12 ppm	2.26	0.3					16.56	
H_2S			0.68	750	0.02	2		10 ppm	15.04	2	0.77	748	0.005	5	0.27	743
COS			0.02	24							0.02	24	0.01	12		12
SO_2	0.7	176														
C_2H_6	0.25	63														
Tar	0.03	8														
Total, lb-mol/hr	100.00	25,225	100.00	109,583.3	100.00	12,848.3	100.00	12,826	100.00	13.3	100.00	96,735	100.00	92,248	100.00	4,487
(gm-mol/sec)		(3,178)		(13,807)		(1,619)		(1,619)		(1.7)		(12,189)		(11,623)		(565)

Table XIV-2
Stream Compositions — Fuel Gas Case

Stream	A	B	C
Stream Name	Coal Feed	Pretreated Char	Ash
Flow Rate (kg/hr)	277,667	238,296	38,924
Component	wt % (Dry)	wt % (Dry)	wt % (Dry)
C	71.50	71.25	20.06
H	5.00	4.02	1.09
O	6.50	7.50	–
N	1.20	1.00	1.80
S	4.40	3.74	0.59
Ash	11.40	12.49	76.46
Total	100.00	100.00	100.00

Stream	1		2		3	
Stream Name	Pretreater Gas		Raw Gas		Fuel Gas	
Pressure (kg/cm^2)	22		22		2.4	
Temperature (^oC)	425		770		65	
Component	mol %	gm-mol/sec	mol %	gm-mol/sec	mol %	gm-mol/sec
CO	2.91	93	25.59	2410	25.85	2410
CO_2	7.97	253	11.08	1043	11.19	1043
H_2	–	–	17.66	1663	17.84	1663
H_2O	23.02	732	15.43	1452	15.58	1452
CH_4	0.46	15	7.21	679	7.28	679
N_2	64.66	2055	21.99	2071	22.22	2071
H_2S	–	–	1.00	95	10 ppmv	< 1
SO_2	0.70	22	–	–	–	–
C_2H_6	0.25	8	–	–	–	–
O_2	–	–	–	–	–	–
Tar	0.03	1	–	–	–	–
COS	–	–	0.03	3	0.03	3
HCN	–	–	–	0.04	–	–
NH_3	–	–	0.01	1	0.01	1
Total	100.00	3178	100.00	9417	100.00	9322

Table XIV-3
Component Analysis (Dry Coal)*

Component	Weight %
Carbon	71.50
Hydrogen	5.00
Oxygen	6.50
Nitrogen	1.20
Sulfur	4.40
Ash	11.40
Total	100.00

*This coal has caking characteristics and requires pretreatment.

(2) Layout and Symbols

The general direction of process flow is from the coal supply on the left to the product gas on the extreme right of the flow diagram, with residuals and by-products shown along the bottom. The bold line indicates the flow of the primary gasification process. The encircled figures and letters refer to the stream compositions shown in Tables XIV-1 and XIV-2. The overall energy balances are discussed later in this chapter.

Rhombic-shaped units represent intermediate sources (such as process waste heat generation) for which the distribution is not shown. Nonintegral pollutant cleanup processes are indicated by sloping rectangles. The extensive treatment and recovery processes which this symbol represents are discussed in the process description and pollution control sections of this process summary. Inverted trapezoids denote residual storage.

2. PROCESS DESCRIPTION

The unit processes which comprise the gasification phase of the U-Gas system are described in this section. Further discussion of the gas purification and pollution control phases of the process is discussed in Section 3 of this synopsis.

(1) Coal Preparation and Pretreatment

In the U-Gas process, coal of any rank—from bituminous to lignite—is first sized and pressurized in a lock hopper. If the coal has caking tendencies, it is transferred to a pretreater where it is reacted with air at 700 to 800 degrees F (370 to 425 degrees C) and 300 psia (21 kg/cm^2) to oxidize a small portion of the coal and render it noncaking. The coal residence time in this pretreatment reactor is about 30 minutes. The air requirement is approximately one pound of air per pound of coal. In the design used for this analysis, the heat of reaction, 520 million Btu/hr (131 x 10^6 kcal/hr), is recovered by coils immersed in the fluidized bed. All the steam required for subsequent gasification is generated with this heat. Some excess thermal energy is available to raise steam for generating by-product power [discussed later in Sections (5) and (8)].

(2) Gasification

The U-Gas process utilizes fluidized bed gasification. The advantages of this type of operation include the following:

- High reaction rates can be attained
- Coal fines from mining and crushing can be used in the feed
- The mass of carbon in the fluid bed ensures reducing conditions at all times
- The bed temperature can be readily controlled.

Treated coal overflows the pretreater into the fluidized bed gasification reactor, which also operates at 300 psia

(21 kg/cm^2). The effluent gas from the pretreater stream 1 discharges into and mixes with the gasifier overhead stream.

1. Combined Cycle Case

In the combined cycle case, the pretreated coal is reacted with a mixture of air and steam, using approximately two pounds (0.9 kg) of air* and 0.5 pounds (0.2 kg) of steam for each pound (0.5 kg) of initial coal fed to the system. Gasification takes place under nonslagging conditions at about 1900 degrees F (1040 degrees C) in the fluidized bed. The gasifier operates with an average gas velocity of 1 ft/sec (0.3 m/sec) and a char residence time of about 50 minutes. When using airblown gasifiers, five reactors (plus one spare), each with an inner diameter of 22.5 feet (6.9 m) and a shell length of 30 feet (9.1 m), are required for the 7346 tons/day (6664 m tons/day) of coal feed.

To protect the discharge lock hoppers from the hot ash agglomerates, they are filled with water to absorb the heat contained in the ash. When filled, the hopper contents are flushed into separators to recover ash for final disposal.

The gasifier design includes a free space above the fluidized bed, giving a gas residence time of 10 to 15 seconds; the gas here reaches a temperature of between 1500 degrees - 1900 degrees F (815 degrees - 1040 degrees C). With this design, the liquid hydrocarbons that may evolve are thermally hydrocracked to gas: no tars, oils, or phenols are expected in the raw gasifier product. Elimination of tars and oils from the raw gas (stream 2) reduces heat-exchanger fouling and simplifies waste stream treatment.

* The power to drive the air compressor (131,900 hp) would be taken from the shaft of the gas turbine in the power generation section of the facility.

Most of the dust contained in the effluent gas is removed by internal cyclone separators and returned directly to the fluidized bed. Fine dust is separated in an external cyclone, a second stage of dust removal, and is injected back to the gasifier where carbon contained in the fine dust is gasified. The fine ash sticks to the heavy agglomerates and is removed from the system. After fine dust recovery, the combined pretreater and gasifier off-gases, with a heating value of 152 Btu/ft^3 or 1353 kcal/m^3(dry basis), leave this section at 1550 degrees F (843 degrees C). They are then cooled to 66 degrees C by two waste heat boilers and air coolers.

2. Fuel Gas Case

For the fuel gas production case, the use of oxygen instead of air as the coal-gasifying reactant raises the heating value of the raw gas to 255 Btu/ft^3 (2269 kcal/m^3), or on a wet basis, 214.8 Btu/ft^3 (1911 kcal/m^3). In this case, the pretreater is operated with air, and 99.5 percent purity oxygen is used in the gasifier. The same sequence of operations is used as for the combined cycle case, except that an oxygen facility with a capacity of 2650 tons/day (2400 m tons/day) has been added to the plant. This facility is powered by shaft energy from the expansion turbine located downstream in the process. First, air is compressed to 100 psia (7 kg/cm^2) and cooled; then 37 percent is further compressed to 350 psia (24.6 kg/cm^2) with expander shaft power and delivered to the pretreater. The remaining 63 percent goes to oxygen separation. The resulting high purity oxygen is compressed to 350 psia (24.6 kg/cm^2), also with expansion turbine shaft power. The total power required for this series of compressions is 90,600 hp, compared with 131,800 hp for airblown gasification. Of course, air compression for the pretreatment and the oxygen plant could have been supplied from external sources. In this case the power output for the expansion turbine would have been increased. This alternative was not considered here because of the ready availability of shaft energy and the less expensive option as presented.

With oxygen-blown gasification, the total raw gas (gasifier plus pretreater effluent) is 68 percent of that with airblown gasification, so the number of gasifiers can be reduced from six to four (one spare in each case).

(3) General Comments

The oxygen-blown gasifier generates product fuel gas at a rate of 144 billion Btu/day (36.3 x 10^9 kcal/day) from the specified coal feed, compared with 129 billion Btu/day (32.5 x 10^9 kcal/day) when using an airblown gasifier system. In both cases, a substantial amount of additional heat can be recovered and used to generate power in a steam cycle. For the airblown gasifier, 21.7 billion Btu/day (5.5 x 10^9 kcal/day) is recovered in this manner; about half this amount is recovered from the oxygen-blown system. Therefore, the total energy recovered is nearly the same in both cases, about 150 billion Btu per day (37.8 x 10^9 kcal/day).

At this point in the process, the flow schemes differ depending on the final use of the gas and the sulfur recovery system used.

(4) Gas Purification, Combined Cycle Case

This section will include a discussion of the waste heat recovery, sulfur removal and wastewater treatment portions of the U-Gas process.

In the combined cycle case, the product gas is required at pressure to provide turbine motive power. The gasifier is airblown since nitrogen dilution is acceptable. Therefore, a sulfur removal process should be selected that will operate at the gasifier pressure. The Selexol process was chosen as the acid-gas treatment for this analysis. This acid-gas removal process requires a low-temperature feed (relative to gasifier raw gas temperature). Equipment must be provided to cool the gas and to process the condensed water.

The 800 degree F (425 degree C) gas is further cooled in a second waste heat boiler to 275 degrees F (135 degrees C).

This recovered heat is used to generate steam required in the Selexol unit. The gas is then cooled to 150 degrees F (66 degrees C) in an air cooler, and final cooling is accomplished in a scrubber—a direct contact device that scrubs ammonia (stream 3) from the gas stream. The cool, scrubbed gas (stream 6) is then passed through the Selexol process (discussed later) for removal of most of the sulfur. Some carbon dioxide is also removed in this process, increasing its heating value to 159 Btu/ft^3 (1415 kcal/m^3). The gas can now be used as a clean fuel in a combined cycle power facility.

(5) Energy Balance, Combined Cycle Case

The overall energy balance for the process is presented in Table XIV-4.

The gasifier-power system should be best analyzed as a unit, because of the energy transfer between them. Hence, the energy balance for the U-Gas gasification system designed for use in combined cycle operation is difficult to specify unambiguously. For example, the air compressor for the gasifier would be driven by shaft horsepower from the gas turbine of the combined cycle system. Similarly there is compression energy in the process gas. Therefore, the energy balance of Table XIV-4 is based on the total net energy transferred with an overall coal-to-energy efficiency of 79.8 percent.

At this stage in the development of the process, the overall steam, water and electrical requirements of the gasifier portion of the system (as described in this analysis, with low temperature desulfurization) have not been estimated.

(6) Sulfur Balance, Combined Cycle Case

The sulfur balance for this process, which uses 4.4 percent sulfur (dry basis) Pittsburgh Seam Coal, is shown in Table XIV-5.

This process recovers about 96 percent of the sulfur in the coal as a liquid by-product by sending the Selexol off-gas to a Claus plant with a Wellman-Lord tail-gas scrubber and

Table XIV-4
Energy Balance Calculations, Combined Cycle Case

Carrier	Calculations	Energy ($x10^6$ Btu/hr)	Energy ($x10^6$ kcal/hr)
Coal	612,140 lb/hr x 12,388 Btu/lb	7583.2	1911.0
Total energy input		7583.2	1911.0
Product gas	92,248 mol/hr x 378.5 ft^3/mol x 159 Btu/ft^3	5551.2	1398.9
Net expansion energy in product gas*		23.8	6.0
By-product steam	645,700 lb/hr x 1400 Btu/lb @ 2400 psig, 1000° F	904	227.8
Less: Air compression requirements	131,800 hp (heat equivalent)	-335.6	-84.6
Electric power requirements	26,500 kWh @ 3413 Btu/kWh	-90.4	-22.8
Net energy output†		6053	1525.3
Sulfur	7557 mol/hr x 32.06 lb/mol x 3983 Btu/lb	96.5	24.3
Ammonia	9 mol/hr x 17.03 lb/mol x 9598 Btu/lb	1.5	0.4
Ash	86,446 lb/hr x 3878 Btu/lb	335.2	84.5
Losses	(By difference)	1097	276.5
Total energy output		7583.2	1911.0

*Net expansion gas is defined as the energy of isentropic expansion of product gas (stream 7) to 20 psia (1.4 kg/cm^2), less the heat required to maintain the temperature of the expanded gas at the temperature of stream 7 before expansion.

†This quantity is the net energy transferred and sold to the combined cycle portion of the system.

Table XIV-5
Combined Cycle Case, Sulfur Balance

	Mol/Hr	%
INPUT		
Coal:		
$612{,}140 \text{ lb wet coal/hr} \times \frac{0.94 \text{ lb dry coal}}{\text{lb wet coal}} \times \frac{0.044 \text{ lb S}}{\text{lb dry coal}} \times \frac{\text{mol S}}{32.06 \text{ lb S}} =$	789.7	100.0
OUTPUT		
Ash:		
$86{,}446 \text{ lb/hr} \times \frac{0.0058 \text{ lb S}}{\text{lb ash}} \times \frac{\text{mol S}}{32.06 \text{ lb S}} =$	15.3	2.0
Wastewater to cooling tower	0.1	--
By-product sulfur	755.7	95.7
Stack gas from sulfur plant (250 ppm as SO_2)	1.3	0.2
Product gas to combined cycle	17	2.1
Total	789.7	100.0
(gm-mol/sec)	(99.5)	

SO_2 recycle. The performance of the sulfur removal and recovery units is discussed later. The sulfur content of the treated low-Btu product gas is 184 ppm* and is a function of the sulfur content of the coal.

The sulfur emitted from combustion of this gas is about 0.2 lb $SO_2/10^6$ Btu (0.36 kg $SO_2/10^6$ kcal) of fuel gas. However, this gas is designed as feed for production of about 1000 MW (gross) of power when efficient high-temperature, combined cycle systems are developed. An evaluation of the improved efficiency of combined cycle power generation is possible by considering the relative fuel requirements, compared to

* In this synopsis the ppm of sulfur in the gas refers to the volumetric concentration of sulfur-containing species, calculated as monomolecular sulfur content.

conventional steam power plants. Additional fuel would be required in a conventional plant to attain the power output considered here. If the emission of the combined cycle facility was based on the fuel requirement of a conventional plant sized to the same output, the calculated emissions would be only 0.12 lb $SO_2/10^6$ Btu (0.216 kg $SO_2/10^6$ kcal) of feedstock.

(7) Gas Purification, Fuel Gas Case

In the fuel gas case, product gas can be supplied at low pressure for use by industrial users. The Stretford process was chosen for sulfur recovery because this system will process the low pressure gas and regenerate elemental sulfur in a single process.

The 800 degree F (425 degree C) gas from the waste heat boiler is passed through a high efficiency precipitator to remove any remaining particulate matter before going to an expansion turbine. The turbine is operated so that the gas is maintained above its dew point to avoid condensation within the turbine. The gas is then cooled from 216 degrees F to 150 degrees F (102 degrees C to 66 degrees C) before being fed to the Stretford sulfur recovery unit. This temperature is still above the condensation point of the water in the gas; therefore, a separate wastewater stream is not condensed in this process. Sulfur is recovered in the Stretford unit (as discussed later) and the sweet gas (stream 3) is sent to users at a slightly elevated temperature. Note that the gas cannot be stored or cooled, because an ammonia-rich liquor will condense.

(8) Energy Balance, Fuel Gas Case

The overall energy balance for the fuel gas case is shown in Table XIV-6. Conversion of input energy to fuel gas is calculated to be 79.3 percent. Including by-product power, the efficiency increases to 82.5 percent. If the by-product energy can be delivered as steam, rather than electric power, the overall efficiency increases to 87 percent. As discussed in Section (5) of this chapter, the overall steam, water and electrical requirements have not been estimated.

Table XIV-6
Energy Balance Calculations, Fuel Gas Case

Carrier	Calculations	Energy ($x10^6$ Btu/hr)	Energy ($x10^6$ kcal/hr)
Coal	612,140 lb/hr x12388 Btu/lb	7583.2	1911.0
Total energy input		7583.2	1911.0
Product fuel gas	73,988 mol/hr x 378.5 ft^3/mol x 214.8 Btu/ft^3 (wet basis)	6015.4	1515.9
By-product power	72,570 kWh x 3413 Btu/kWh	247.8	62.4
Sulfur	749.7 mol/hr x 32.06 lb/mol x 3983 Btu/lb	95.7	24.1
Ash	85,812 lb/hr x 3628 Btu/lb	311.3	78.5
Losses	Heat to atmosphere from cooling water, power recovery losses, plant effluent sensible heat losses	913.0	230.1
Total energy output		7583.2	1911.0

(9) Sulfur Balance, Fuel Gas Case

The sulfur balance for this process is shown in Table XIV-7. The Stretford unit recovers about 95 percent of the sulfur that is contained in the feed coal as elemental sulfur. The product fuel gas contains about 3 percent of the initial sulfur in the coal at a concentration of 325 ppm. Combustion of this gas will emit 0.25 lb $SO_2/10^6$Btu (0.45 kg $SO_2/10^6$kcal) of fuel gas consumed. This is significantly less than that attainable for direct combustion of the coal, even with stack gas treatment to Federal EPA New Source Performance Standards.

Table XIV-7
Fuel Gas Case, Sulfur Balance

	Mol/Hr	%
INPUT		
Coal:		
$612{,}140 \text{ lb wet coal/hr} \times \frac{0.94 \text{ lb dry coal}}{\text{lb wet coal}} \times \frac{0.044 \text{ lb S}}{\text{lb dry coal}} \times \frac{\text{mol S}}{32.06 \text{ lb S}} =$	789.7	100.0
OUTPUT		
Ash:		
$85{,}812 \text{ lb ash/hr} \times \frac{0.0059 \text{ lb S}}{\text{lb ash}} \times \frac{\text{mol S}}{32.06 \text{ lb S}} =$	15.7	2.0
NaCNS produced in Streford tower	0.3	--
Sulfur product	749.7	94.9
Fuel gas	24	3.0
Total	789.7	100.0
(gm-mol/sec)	(99.5)	

3. DISCUSSION OF POLLUTION CONTROL PROCESSES: COMBINED CYCLE CASE

As discussed in Section 1 of this report, the entire process for the manufacture of a low-Btu gas may logically be considered as a pollution control measure since it permits the utilization of high-sulfur coal in an environmentally satisfactory manner. In the application proposed here, however, the gas has intrinsic value because it may be utilized in a combined cycle system for power generation. Therefore, only those portions of the U-Gas process considered as pollution control processes are discussed below. The major waste streams are shown in Table XIV-1, and control treatment processes are summarized in Table XIV-8.

(1) Control of Coal Dust

Coal dust is generated during the breaking and crushing operations. This material can be collected with induced draft systems equipped with cyclones and/or bag filters. The collected particulate matter is recycled to the process.

Table XIV-8
Source and Treatment of Major Waste Streams for U-Gas Process—Combined Cycle Case (Airblown Gasifier)

Intermediate Waste Stream	Source	Treatment
1. Coal dust	Coal preparation	Cyclones, bag filters recover dust for return to process
2. Ash	U-Gas reactors	Agglomerated ash is slurried, depressurized, dewatered and returned to mine
3. Hydrogen sulfide, carbonyl sulfide, hydrogen cyanide, sulfur dioxide	From gas product, or removed in acid-gas treatment and wastewater treating	Selexol, Claus, and Wellman-Lord process with an incinerator
4. Wastewater	Scrubber	Modified Chevron process, with ammonia recovery

(2) Ash Collection and Disposal

The ash agglomeration feature of the gasifier produces pellet-size particles that are removed by slurrying with water. Pellets drop from the gasifier into a slurry surge pot that is continuously discharging to lock hoppers for pressure reduction. After depressuring, the lock hopper discharges by gravity flow to a screen separator to separate and recycle the water. The pellets are stored in a surge pile and are eventually discarded in mined-out areas. The nature of the solids discharged from the reactor should minimize any leaching from the ash.

(3) Sulfur Recovery

For the combined cycle case, the product gas must be maintained at pressure. It is also advantageous to leave the carbon dioxide and water vapor in the gas stream (power recovery in the gas turbine is thereby increased). A Selexol acid-gas removal unit can be designed to remove most of the sulfur and leave the majority of the carbon dioxide in the product. However, the process does dehydrate the feed gas.

The Selexol process (developed by Allied Chemical Corporation) is based on the physical solubility of acid-gases in a glycol ether solvent. The solubility of hydrogen sulfide in this solvent is much greater than that of carbon dioxide; therefore, the absorption conditions can be established to remove hydrogen sulfide preferentially over carbon dioxide. The resulting effluent stream (stream 8) containing 16 percent H_2S in CO_2 is satisfactory for recovery of sulfur by the Claus process. The product gas (stream 7) contains only 50 ppm H_2S and the majority of the original CO_2. One other species of sulfur, carbonyl sulfide, must be considered in this system. The solubility of carbonyl sulfide (COS) in the Selexol solvent (as in most solvents) is intermediate between that of H_2S and CO_2. Therefore, an absorber design that preferentially recovers H_2S over CO_2 cannot recover a high proportion of the COS. In the example presented, approximately 50 percent of the COS is recovered with the H_2S; according to estimates from licensors of various solvent-based processes, the remainder stays in the product gas. The total sulfur content of the treated gas is 184 ppm and, after combustion, results in an emission of 0.2 lb $SO_2/10^6$ Btu (0.36 kg/10^6 kcal) of heating value in the fuel gas.

The carbonyl sulfide in the treated gas is a major contributor to the total emitted pollution and deserves further discussion. In this case, the COS formation within the gasifier was assumed to follow thermodynamic equilibrium (although the COS concentration may be significantly higher or lower, depending upon the kinetics of the sulfur reactions). The Selexol process recovers about half the COS present, so the contribution of COS to final emissions (on a Btu basis) is directly proportional to the sulfur content of the coal and independent of the Btu rating of the gas.

Rich H_2S off-gas from the Selexol unit is combined with a sulfur dioxide recycle stream from the Wellman-Lord tail-gas scrubber and a small gas stream from wastewater treatment. These sulfur-containing streams are treated in a Claus unit that recovers 259 L tons/day (263 m tons/day) of elemental sulfur. Claus reactors are discussed in detail in Section 1 of this report.

Tail-gases from the Claus plant are incinerated to convert all sulfur compounds to SO_2, so they can be concentrated in the aqueous sodium sulfite solution of a Wellman-Lord unit. Gas vented to the atmosphere will contain about 250 ppm SO_2; the recovered SO_2 is recycled to the Claus unit.

The sulfur removal and recovery system described here may not be ideal. The high-pressure Stretford unit, as discussed in Chapter XIII could have been employed. It is simpler and leaves all the CO_2 in the product gas but releases greater emissions. A still more desirable system would treat the gas at elevated temperature (above 800 degrees F, 425 degrees C) and leave all the water vapor and carbon dioxide in the product gas. Several such systems are under development at various laboratories. Processes for high-temperature desulfurization are now being developed. One of these will be considered in Phase II of this study. Although theory dictates that higher temperature sulfur removal cannot be complete, this potential process promises much higher efficiency for power generation from coal.

(4) Wastewater Treatment

The major pollutants in the composite wastewater stream (stream 3) in the combined cycle case are small amounts of hydrogen cyanide, ammonia, carbon dioxide, and hydrogen sulfide. The composition is reported in Table XIV-1. Hydrogen sulfide in the wastewater stream is only a small fraction of the total generated in the process.

The potential pollutants are recovered by a modified Chevron wastewater treatment. Hydrogen sulfide, hydrogen cyanide, and some carbon dioxide are removed by a stripping tower, and sent to the sulfur recovery unit (stream 5). Ammonia is recovered by a second stripping tower and is dehydrated, perhaps in a Phosam process, which produces an anhydrous ammonia by-product. The HCN which is recovered is incinerated in the sulfur burner of the Claus plant.

The wastewater, after purification by the modified Chevron process (stream 4), may still contain trace amounts of ammonia, cyanide, and sulfur compounds, but the water quality is satisfactory for cooling water makeup. The low-concentration contaminants in the cooling water are eventually eliminated by biological action in the cooling system, or they are discharged in the cooling tower blowdown. The latter can be used in such applications as quenching of hot ashes discharged from the bottom of the gasifier.

Blowdown from cooling towers and boilers, as well as sanitary sewage and runoff water, can be treated by a miscellaneous treatment section incorporating a sewage treatment plant. The only waste product discharged from the wastewater treatment stage will be an inert, solid residue.

4. DISCUSSION OF POLLUTION CONTROL PROCESSES: FUEL GAS CASE

In the fuel gas case, the coal is gasified to generate a low-Btu fuel gas, perhaps for industrial use. As such, the overall process may be considered as pollution control because it permits the utilization of high-sulfur coal in an environmentally satisfactory manner. However, within the constraints of this project, only the unit pollution control processes are discussed below. The major waste streams are shown in Table XIV-9.

The ash and coal dust are handled in the same manner as in the combined cycle case and are discussed in a previous section of this chapter. The nitrogen stream from the oxygen plant requires no treatment. Also, this process is specifically designed to avoid liquid condensation — another potential pollutant.

Table XIV-9
Source and Treatment of Major Waste Streams for U-Gas Process — Fuel Gas Case (Oxygen-Blown Gasifier)

Intermediate Waste Stream	Source	Treatment
1. Coal dust	Coal preparation	Cyclones, bag filters return to process
2. Ash	U-Gas reactors	Agglomerated ash is slurried, depressurized, dewatered, and returned to mine
3. Hydrogen sulfide, carbonyl sulfide, hydrogen cyanide	From gas production	Stretford process
4. Nitrogen	Oxygen plant	No treating necessary

In this example, the low-Btu product is supplied at low pressure for use as fuel. A Stretford unit was selected for sulfur removal in this application. The Stretford process uses a chemical-type solvent consisting of an aqueous solution containing sodium carbonate, sodium vanadate, and anthraquinone disulfonic acid (ADA). The feed gas is countercurrently scrubbed with this solution. The solution reaches an equilibrium with respect to the CO_2; only relatively small amounts are removed by the process. The same effect is assumed for the ammonia in the feed gas. Ammonia is shown in the product fuel gas (stream 3) at 100 ppm. The H_2S dissolves in the alkaline solution and is removed to less than 10 ppmv. The solution is regenerated by air-blowing and elemental sulfur is removed by froth flotation at a rate of 258 L tons/day (262 m tons/day).

The HCN in the raw gas reacts with sulfur to form sodium thiocyanate which may build up and require purging. A modification to the process is under development to effect HCN removal via reaction with sodium polysulfide to produce sodium thiosulfate. Additional thiosulfate may be generated due to the elevated operating temperature, thereby requiring treatment of a small purge stream.

The Stretford process is specific for removal of H_2S and does not remove COS that is present in the raw fuel gas. Hence, as in the combined cycle case, the primary sulfur species contributing to emission is carbonyl sulfide, and the COS in the product gas is directly related to the sulfur content of the coal. The emission, on a Btu basis, will be independent of the fuel heating value, but the sulfur concentration, on a ppm basis, will decrease as the fuel is diluted with inert gases. Combustion of this fuel gas will discharge sulfur emissions of 0.25 lb $SO_2/10^6$ Btu (0.45 kg $SO_2/10^6$ kcal). These emissions are significantly below those specified by the EPA New Source Performance Standards of 1.2 lb $SO_2/10^6$ Btu (2.16 kg $SO_2/10^6$ kcal) for the alternative, direct combustion of coal.

5. INCREMENTAL COSTS OF POLLUTION CONTROL PROCESSES*

Costs of the pollution control and treatment processes described above are calculated and presented in this section. The major assumptions and conventions adopted are discussed in Chapter III of this report.

Incremental** capital and operating costs are estimated for both cases and shown in Tables XIV-10, 11, 12 and 13.

The derivation of the formulae for calculating the incremental cost of gas production due to pollution control is presented in Chapter III of this report. For the discounted cash flow (DCF) method,

---

* The costs presented here are preliminary estimates; the actual costs of emission control in this process will not be known until a full-scale facility has been constructed and operated.

** Incremental costs in this report refer to that portion of the total plant cost that is assignable to pollution control facilities.

Table XIV-10

Incremental Capital Cost[a] for Pollution Abatement for Combined-Cycle Facility Using Airblown U-Gas Process

Item	$x10^6$	
Waste heat boiler – 2	6.6	
Air cooler	1.7	
Scrubber cooler	0.7	
Selexol	13.0	
Claus	2.3	
Wellman-Lord	4.0	
Wastewater treating	3.2	
Particulate emission control	2.2	
Subtotal installed equipment cost[a]	33.7	
Project contingency (15%)	5.1	
Incremental plant investment (I)[b]	38.7	
Startup costs (S)[c]	1.1	
	DCF Method	**Utility Method**
Interest during construction[d]	9.2	6.5
Working capital (W)[e]	1.0	0.8
Incremental capital investment (C)	50.0	47.1

Notes

[a]Incremental plant investment, return on investment during construction, and working capital are treated as capital costs in year 0 (the year ending with completion of startup operation).

[b]Installed costs, including engineering design costs, contractors' profit and overhead, and the contingency includes costs for unexpected site preparation and hardware requirements at 15% of plant investment.

[c]At 20% of incremental gross operating cost.

[d]For the DCF method, computed as the discount rate x incremental plant investment for 1.875 years' average construction period.
$I(1+i)^n = I(1.12)^{1.875} = 1.2367611$ or 0.23676111 additional investment.

For the utility financing method, computed as the interest rate on debt x incremental plant investment x 1.875 years.

[e]Sum of materials and supplies at 0.9% of incremental plant investment and net receivables at 1/24 of annual incremental revenue.

Table XIV-11
Incremental Operating Costs for Pollution Abatement for Combined-Cycle Facility Using Airblown U-Gas Process

Item	$/Year		
Labor			
Direct operating labor (DOL) 5 men/shift X $5/hr X 8304 shift hr/man yr	207,600		
Maintenance labor (1.5% of I)	580,500		
Supervision (15% of direct operating and maintenance labor)	118,200		
Subtotal labor cost		906,300	
Administration and general overhead (60% of labor subtotal)		543,800	
Other direct cost[a]		2,528,600	
Supplies			
Operating (30% of DOL)	62,300		
Maintenance (1.5% of I)	580,500		
Subtotal supplies		642,800	
Local taxes and insurance (2.7% of I)		1,044,900	
Incremental gross operating costs			5,666,400
By-product credits[b]			
Sulfur at $10/LT	851,000		
Ammonia at $25/ton	15,000		
Total by-product credit		866,000	
Net operating costs (N)			4,800,400

Notes:

[a]Other direct materials include:

Purchased utilities:	$/year
Makeup boiler feed water at 30¢/1000 gal	14,400
Cooling water at 3¢/1000 gal	721,100
Power at 1.5¢/kWh	1,664,500
Materials, supplies, chemical for sulfur recovery at $1.50/LT	128,600
Total	2,528,600

[b]By-product steam is not credited here because it is not made in the pollution abatement portion of the system and it is sold as energy, along with the product gas in the combined cycle portion of the facility.

Table XIV-12
Incremental Capital Cost[a] for Pollution Abatement
for Fuel Gas Plant Based on U-Gas Process
(Oxygen-Blown Gasifier)

Item	$\$x10^6$	
Incremental sulfur recovery – Stretford	12.6	
Waste heat boiler to generate steam for Stretford	0.2	
Exchanger	0.7	
Modification to Stretford to handle NaCNS	1.0	
Particulate emission control	2.2	
Subtotal installed equipment cost	16.7	
Project contingency (15%)	1.7	
Incremental plant investment (I)[b]	18.4	
Startup costs (S)[c]	0.7	
	DCF	**Utility Method**
Interest during construction[d]	4.4	3.1
Working capital (W)[e]	0.5	0.4
Incremental capital investment (C)	24.0	22.6

Notes

[a]Incremental plant investment, return on investment during construction, and working capital are treated as capital costs in year 0 (the year ending with completion of startup operation).

[b]Installed costs, including engineering design costs, contractors' profit, and overhead, and the contingency includes costs for unexpected site preparation and hardware requirements at 15% of plant investment.

[c]At 20% of incremental gross operating cost.

[d]For the DCF method, computed as the discount rate x incremental plant investment for 1.875 years' average construction period.
$I(1+i)^n = I(1.12)^{1.875} = 1.2367611$ or 0.2367611 additional investment.

For the utility financing method, computed as the interest rate on debt x incremental plant investment X 1.875 yrs.

[e]Sum of materials and supplied .9% of incremental plant investment and net receivables at 1/24 of annual incremental revenue.

Table XIV-13
Incremental Operating Costs for Pollution Abatement for Fuel Gas Plant Based on U-Gas Process (Oxygen-Blown Gasifier)

Item		$/Year	
Labor			
Direct operating labor (2 men/shift X $5 hr X 8304 shift hr/man yr)	83,000		
Maintenance labor (1.5% of I)	266,000		
Supervision (15% of direct operating and maintenance labor)	53,900		
Subtotal labor cost		402,900	
Administration and general overhead (60% of labor subtotal)		241,700	
Other direct costs[a]		2,242,600	
Supplies			
Operating (30% of Direct operating labor)	24,900		
Maintenance (1.5% of I)	266,000		
Subtotal supplies		290,900	
Local taxes and insurance (2.7% of I)		496,800	
Incremental gross operating costs		3,674,900	
By-product credit (sulfur at $10/LT)[b]		− 845,900	
Net operating costs (N)			2,829,000

Notes:

[a]Other direct costs:

	$/year
Steam at $1/1000 lbs	124,600
Power at 1.5¢/kWh	1,716,700
Process water at 30¢/1000 gal	26,000
Chemical at $4/LT sulfur	338,400
Cooling H_2O at 3¢/1000 gal	36,900
Total	2,242,600

[b]Excess power is also produced as a by-product in this case; however, it is not produced from the incremental pollution abatement portion of the system.

the required incremental annual cost of gas, X, for the assumed rate of return is:

$$X = N + 0.23816I + 0.1275S + 0.230777W$$

where

N = incremental net operating cost
I = incremental plant investment
S = startup costs
W = incremental working capital

For the utility financing case, it is:

$$X = N + 0.1198C + 0.0198W$$

where

C = required incremental capital investment
N = as defined above
W = as defined above

Assuming an annual gas production of G, the incremental cost of gas, due to pollution controls is:

$$\frac{\text{annual cost of gas}}{\text{annual gas production}} = \frac{X}{G}$$

Solutions to the above equations for the incremental cost of gas are shown in Table XIV-14.

Table XIV-14
Incremental Cost of Gas ($/10^6 Btu)

Accounting Method	Combined Cycle Case		Fuel Gas Case	
	Incremental Annual Cost of Energy ($/year)	Incremental Cost of Energy ($/10^6 Btu)	Incremental Annual Cost of Gas ($/yr)	Incremental Cost of Gas ($/10^6 Btu)
DCF	14,371,800	0.33	7,415,800	0.16
Utility	10,458,400	0.23	5,532,400	0.12

(1) Combined Cycle Case

The capital investment costs of pollution control equipment used in the combined cycle case (airblown gasifier) are about $50 million for a system producing 130 x 10^9 Btu/day. Based on the amount of product gas produced, the cost is between $0.23-$0.33/10^6 Btu when operating costs are included.

The total costs for this gasification system have also been estimated for both low temperature desulfurization as well as for high-temperature desulfurization by the IGT Meissner process when it is developed. For low temperature desulfurization, the overall plant investment is expected to be about $110 million; pollution control is therefore about 45 percent of the total cost. Similarly, the incremental increase in gas price resulting from pollution control is about 50 percent of the total processing cost.

When high temperature desulfurization is developed, the expected overall price of low-Btu gas is expected to decrease by about 25¢/10^6 Btu, both because of the simplified cleanup system and because of the greater thermal efficiency of high-temperature processing.

(2) Fuel Gas Case

The costs of pollution control in the oxygen-blown fuel gas case are somewhat lower than for the combined cycle case, primarily because of simplified treatment and elimination of wastewater treatment. In this case, the incremental capital requirement is about $23-24 million and the incremental increase in the price of gas is about $0.12-$0.16/million Btu, when operating costs are included.

* * * * *

6. REFERENCES

(1) Loeding, J. W. and Tsaros, C. L., "IGT U-Gas (Clean Utility Gas) Process," Clean Fuels from Coal Symposium, Institute of Gas Technology; Chicago, Illinois (September 10-14, 1973).

(2) Jequier, L. et al., "Apparatus for Dense - Phase Fluidization," U.S. Patent 2,906,608 (September 29, 1959).

(3) Jequier, L., Longchambon, L., and G. Van De Putte, "The Gasification of Coal Fines," Institute of Fuel Journal, 33 (1961), 584-591.

XV. THE KOPPERS-TOTZEK PROCESS

The Koppers-Totzek (K-T) process, developed by the Heinrich Koppers Gm H of Essen, is a commercially proven scheme to produce a gas having a heating value of about 2670 kcal/m^3 (300 Btu/ft^3).* This gas can be used directly as utility fuel, for chemical synthesis or as a base for SNG.

In the K-T gasifier, pulverized coal† reacts with steam and oxygen (at high temperature and low pressure). Mixing valves blend the coal, steam and oxygen together prior to entering the gasifier. All fines can be used as feed and no pretreatment is required. The gasifier is refractory lined and equipped with a steam jacket to produce low-pressure steam (reference 3).

Since its first commercial installation in 1952 (in Finland), 16 commercial plants based on the K-T process have been built or are currently under construction (reference 4).

1. PROCESS DISPLAY

A schematic flow diagram for the K-T gasification process is shown in Figure XV-1. Stream compositions and flow rates are given in Tables XV-1 through XV-3 for typical Illinois, Eastern, and Western coals, respectively. Compositions and heating values for these coals are shown in Table XV-4. Overall energy blances are reported in Figure XV-1 and in Table XV-5.

---

* In this synopsis, ft^3 refers to one cubic foot when measured at standard conditions of 60 degrees F, 30" Hg and saturated with water.

† The K-T gasifier can also be adapted to accept liquid fuels.

FIGURE XV-1
The Koppers-Totzek Process

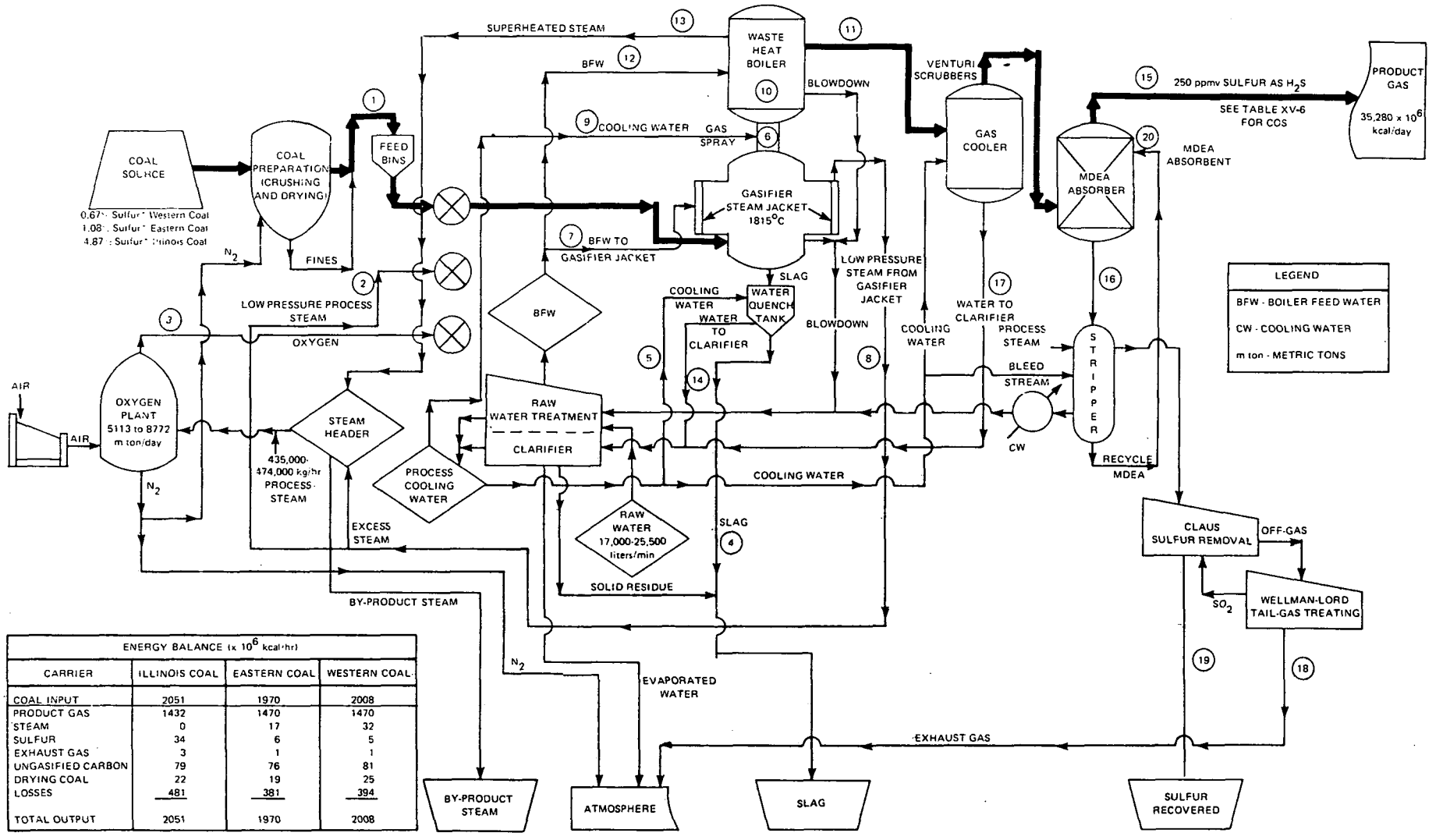

ENERGY BALANCE (x 10^6 kcal/hr)			
CARRIER	ILLINOIS COAL	EASTERN COAL	WESTERN COAL
COAL INPUT	2051	1970	2008
PRODUCT GAS	1432	1470	1470
STEAM	0	17	32
SULFUR	34	6	5
EXHAUST GAS	3	1	1
UNGASIFIED CARBON	79	76	81
DRYING COAL	22	19	25
LOSSES	481	381	394
TOTAL OUTPUT	2051	1970	2008

*SULFUR CONTENT WHEN DRIED TO 2% MOISTURE IN EACH CASE.

Table XV-1
Stream Compositions, Illinois Coal

Stream Names	Dried Coal Feed	Steam	Oxygen	Slag	H_2O From Cooling Tower	Gas Out Gasifier	BFW to Gasifier Jacket	L.P. Steam from Jacket	Spray Cooling Water	Gas to Waste Boiler	Gas Out Waste Boiler	BFW to Boiler	Steam from Boiler	Slag Cool H_2O Return	Gas Out Absorber	Liquid Out Absorber	Condensate Out Cooler	Gas Out Claus	Sulfur Out Claus	MDEA to Absorber
Stream No.	1	2	3	4	5	6	7	8	9	10	11	12	13	14	15	16	17	18	19	20
Gas composition (Vol.	Wt. %																			
CO						51.14				47.38	47.38				61.05					
CO_2						5.60				5.18	5.18				–					
H_2	4.35					31.61				29.28	29.28				37.73					
N_2	0.97		2.0			0.98				.91	.91				1.17					
H_2S + COS	–					1.77				1.64	1.64				H_2S .02 COS .01					
HCl	–					0.06				.05	.05				–					
H_2O	2.00					8.84				15.54	15.54				–					
Ash	19.08																			
C	61.83																			
S	4.87																			
Cl_2	0.179																			
O_2	6.72		98.0																	
Flow rate (lb/hr)																				
CO						880,950				880,950	880,950				880,950					
CO_2	–					151,580				151,580	151,580				–	153,824		154,198		
H_2	31,082					38,867				38,867	38,867				38,867					
N_2	6,931		9,956			16,887				16,887	16,887				16,887			59,175		
H_2S + COS	–					38,740				38,740	38,740				H_2S 466 COS 510	H_2S 35,928 COS 510				
HCl	–					1,315				1,315	1,315				–		1,315			
H_2O	14,291				1,521,252	97,887	153,545		87,904	185,792	185,792	992,964		1,521,250	–		185,792	19,020		
Ash	136,333			68,167		68,167				68,167	68,167				–		68,167			
C	441,798					22,090				22,090	22,090				–		22,090			
S	34,797																		34,032	
Cl_2	1,279																			
O_2	48,017		487,830																	
Steam	–	172,338						146,234					945,688							
SO_2	–																	109		
MDEA	–															1,085,565				1,085,565
Total (lb/hr)	714,528	172,338	497,786	68,167	1,521,252	1,316,483	153,545	146,234	87,904	1,404,388	1,404,388	992,964	945,688	1,521,250	937,680	1,275,827	277,364	232,502	34,032	1,085,565
(kg/hr)	324,110	78,173	225,796	30,921	690,040	597,157	69,648	66,332	39,873	637,030	637,030	450,408	428,964	690,039	425,332	578,715	125,812	105,463	15,437	492,412

Table XV-2
Stream Compositions, Eastern Coal

Stream Names	Dried Coal Feed	Steam	Oxygen	Slag	H_2O From Cooling Tower	Gas Out Gasifier	BFW to Gasifier Jacket	L.P. Steam from Jacket	Spray Cooling Water	Gas to Waste Boiler	Gas Out Waste Boiler	BFW to Boiler	Steam from Boiler	Slag Cool H_2O Return	Gas Out Absorber	Liquid Out Absorber	Condensate Out Cooler	Gas Out Claus	Sulfur Out Claus	MDEA to Absorber
Stream No.	1	2	3	4	5	6	7	8	9	10	11	12	13	14	15	16	17	18	19	20
Gas Composition (Vol. %)	Wt.																			
CO						50.27				46.62	46.62				57.23					
CO_2						5.58				5.17	5.17				2.83					
H_2	4.90		2.0			33.32				30.99	30.99				38.71					
N_2	1.37					1.05				0.98	0.98				1.20					
H_2S + COS						0.34				0.316	0.316				H_2S .026 COS .003					
H_2O	2.00					9.43				15.93	15.93									
Ash	13.72																			
C	69.88																			
S	1.08																			
O_2	7.05		98.0																	
Flow rate (lb/hr)																				
CO						858.009				858.009	858.009				858.009					
CO_2						149.645				149.645	149.645				66.660	83.600		83.600		
H_2	30.170					40.741				40.741	40.741				40.741					
N_2	8.436		9.560			17.996				17.996	17.996				17.996			10.644		
H_2S + COS						7.411				7.411	7.557				H_2S 469 COS 100	H_2S 6.484 COS 100				
H_2O	12.315				956.434	103.486	132.062		84.967	188.453	188.453	965.260		956.436			188.453	3.421		
Ash	84.478			42.239		42.239				42.239	42.239						42.239			
C	430.271					21.513				21.513	21.513						21.513			
S	6.650																		6.126	
O_2	43.408		468.427																	
Steam		189.711						125.774					919.302							
SO_2																		40		
MDEA																				498.000
Total (lb/hr)	615,728	189,711	477,987	42,239	956,434	1,241,040	132,062	125,774	84,967	1,326,007	1,326,153	965,260	919,302	956,436	983,975	90,184	252,205	97,705	6,126	498,000
(kg/hr)	279,294	86,053	216,815	19,160	433,838	562,936	59,903	57,051	38,541	601,477	601,543	437,842	416,995	433,839	446,331	40,907	114,400	44,319	2,779	225,893

Table XV-3
Stream Compositions, Western Coal

Stream Name	Dried Coal Feed	Steam	Oxygen	Slag	H_2O From Cooling Tower	Gas Out Gasifier	BFW To Jacket	Steam From Jacket	Spray Cooling Water	Gas To Boiler	Gas Out Boiler	BFW To Boiler	Steam From Boiler	Slag Cooling H_2O Return	Gas Out Absorber	Liquid Out Absorber	Conden-sate Out Cooler	Gas Out Claus	Sulfur Out Claus	MDEA To Absorber
Stream No.	1	2	3	4	5	6	7	8	9	10	11	12	13	14	15	16	17	18	19	20
Gas composition (Vol %)	wt %																			
CO	–					55.07				51.00	51.00			–	61.61					
CO_2	–					5.68				5.26	5.26				3.51					
H_2	4.24					30.03				27.81	27.81				33.60					
N_2	1.01		2.0			1.11				1.03	1.03				1.24					
H_2S + COS	-					0.28				0.26	0.26				H_2S .025 COS .0027					
HCl	–					0.01				0.01	0.01				–					
H_2O	2.00					7.80				14.61	14.61				–					
Ash	22.14																			
C	56.74																			
S	0.67																			
Cl_2	0.035																			
O_2	13.18		98.0																	
Steam																				
Flow rate (lb/hr)																				
CO	–					918,372				918,372	918,372				918,372					
CO_2	–					148,852				148,852	148,852				82,192	67,056		67,121		
H_2	34,163					35,769				35,769	35,769				35,769					
N_2	8,138		10.441			18,579				18,579	18,579				17,859			8,534		
H_2S + COS	–					6,044				6,044	6,044				H_2S 454 COS 89	H_2S 5181 COS 89				
HCl	-					290				290	290						290			
H_2O	16,115				1,990,559	83,653	173,047		85,470	169,123	169,123	968,976		1,990,558	–		169,123	2,743		
Ash	178,394			89,197		89,197				89,197	89,197				–		89,197			
C	457,182					22,859				22,859	22,859						22,859			
S	5,398																		4,908	
Cl_2	282																			
O_2	106,197		511,607																	
Steam		84,894						164,807					922,843							
SO_2																		32		
MDEA																399,336				399,336
Total (lb/hr)	805,869	84,894	522,048	89,197	1,990,559	1,323,615	173,047	164,807	85,470	1,409,085	1,409,085	968,976	922,843	1,990,558	1,054,735	471,662	281,469	78,430	4,908	399,336
(kg/hr)	365,542	38,508	236,801	40,460	902,918	600,392	78,494	74,756	38,769	639,161	639,161	439,528	418,602	902,917	478,428	213,946	127,674	35,576	2,226	181,139

(1) Basis for Analysis

The process flow sheet data, stream composition and flow rate data presented are based on a facility scaled to produce sufficient product gas to supply 140 x 10^6 Btu/day (35,280 x 10^6 kcal/day). The basic data underlying this analysis (utilizing Western, Illinois and Eastern coals) was supplied by the Koppers Company. Each of the coals is first crushed to 70 percent less than 200 mesh, and then dried to 2 percent moisture (by weight) for use as feed to the gasifier.

(2) Layout and Symbols

The general direction of process flow is from the coal supply on the left to the product gas on the extreme right of the flow design with residuals and by-products shown along the bottom. The bold line indicates the flow of the primary gasification process. The encircled figures refer to the stream compositions shown in Tables XV-1, XV-2, and XV-3.

Table XV-4
Coal Composition and Heating Values

	Western Coal (Wt %)	Illinois Coal (Wt %)	Eastern Coal (Wt %)
Carbon	56.74	61.83	69.88
Hydrogen	4.24	4.35	4.90
Nitrogen	1.01	0.97	1.37
Sulfur	0.67	4.87	1.08
Oxygen	13.18	6.72	7.05
Chlorine	0.035	0.179	0.0
Water (moisture)	2.00	2.00	2.00
Ash	22.14	19.08	13.72
Total	100.00	100.00	100.00
Heating value, x 10^6 Btu/hr	7968	8137	7817
(x 10^6 kcal/hr)	2008	2051	1970

Rhombic-shaped units represent intermediate products (such as boiler feed water), uses (such as electric power), and sources (such as process return water), for which the distribution is not known. Nonintegral pollutant cleanup processes are indicated by sloping rectangles. The extensive treatment and recovery processes which this symbol represents are discussed in the process description and pollution control sections of this process summary. Inverted trapezoids denote residual storage.

2. PROCESS DESCRIPTION

The unit processes which comprise the K-T coal gasification process to produce low-Btu fuel gas are described in this section. The generation and disposition of pollutant streams are discussed when appropriate. The discussion of pollution control processes is covered in the next section.

(1) Coal Preparation

Coal feed for use in the K-T process can contain 2 to 8 percent moisture (by weight) and must be pulverized to about 70 percent less than 200 mesh ($<74\,\mu m$) in the coal preparation system. All fines can be fed to the gasifier. For purposes of this report, each of the three coals is assumed to be dried to 2 percent moisture (by weight) for gasification. The energy requirement for this drying has been charged to the system in each case.

(2) Gasification

Pulverized coal is conveyed to gasifier feed bins and then through screw feeders to the gasifier. Pulverized coal, oxygen, and low-pressure steam are fed through mixing nozzles where moderate temperature and high burner velocity prevent reaction until entry into the gasifier. The high gasification temperature of 3300 degrees F (1815 degrees C) completely gasifies the carbon and sulfur in the feed and produces a clean ash in the form of a molten slag. About one-half of this slag leaves the gasifier with the gas while the other half

drops into a water quench tank. Excess heat from the gasifier reactions is removed by production of low-pressure steam in the gasifier jacket (stream 8).

(3) Gas Quench and Cooling

Gas removed from the gasifier (stream 6) is quenched with a water spray (stream 9) to solidify entrained slag droplets. It is then passed through a waste heat boiler where superheated steam (stream 13) is produced. The quenched gas (stream 11) is cleaned and further cooled in a two-stage venturi scrubbing system (gas cooler). Final particulate removal can be accomplished by electrostatic precipitators (not shown).

(4) Gas Purification

The type of gas cleaning system employed in the process depends primarily on the end use of the product gas. For low pressure utility or synthesis gas production, a chemical reaction system (reference 5) using a tertiary amine (methyl-diethanolamine-MDEA) will produce a clean fuel gas of relatively low sulfur content. The amine, at low temperature and pressure, absorbs essentially all the hydrogen sulfide leaving only 250 ppmv in the gas. According to data provided by the Koppers Company, the carbonyl sulfide (COS) is both physically absorbed and chemically reacted in this purification step. About half of the COS is hydrolyzed to H_2S and half of the remainder is removed by the amines. Therefore, approximately 25 percent of the original COS remains in the treated gas. The MDEA amine may be blended with other amines to optimize ratios of CO_2, H_2S, and COS. For purposes of this study, the CO_2/H_2S ratio fed to the Claus plant (sulfur recovery) is assumed to be 10; during gasification of high sulfur Illinois coal, even though essentially all the CO_2 is absorbed, a more concentrated H_2S stream is sent to the Claus plant.

A Stretford process is another viable alternative that could have application here for sulfur removal. If the K-T off-gas was compressed for use in a high pressure system (e.g., to generate SNG), physical absorption acid-gas removal

unit processes (such as Rectisol, or a hot potassium carbonate process) would have to be considered.

(5) Water Supply and Waste Heat Recovery

Makeup water to the system can be supplied by wells, surface streams, or reservoirs. Conventional water treating techniques are used to make high purity boiler feed waters and other makeup waters for plant needs. The raw water requirements for the 140 x 10^9 Btu/day facility vary from about 17,050 liters/min (4500 gpm) for the Eastern coal to about 25,350 liters/min (6700 gpm) for a Western coal.

Particulate-laden waters from the gas cleaning and cooling system are sent to a clarifier (streams 14 and 17) where the sludge is either filtered or sent to the plant disposal area. Clarified water is reused in the venturi scrubbing system and in the cooling tower system while the solid residue is returned to the mine for disposal along with the slag. Evaporation, windage, and blowdown of the cooling tower, and water in the clarifier sludge and recovered slag are the major losses of water in the K-T process. In arid areas where water supply is at a premium, air cooling would be used wherever feasible.

(6) Oxygen Supply

The (98 percent purity) oxygen required to fire the K-T gasifier for production of utility gas ranges from 5113 m tons/day (5636 tons/day) for Eastern coal to 8772 m tons/day (9669 tons/day) for Western coal. The oxygen is manufactured onsite using commercially available air separation equipment and process steam. Water condensed during compressing and cooling the air is used in the process. The separated nitrogen can also be used in the plant wherever an inert gas is required (e.g., transport medium for prepared coal); however, it is anticipated that the bulk of this stream will simply be returned to the atmosphere.

The energy required for the oxygen plant ranges from 433,650 kg/hr (956,000 lb/hr) of steam for the Eastern coal to 473,600 kg/hr (1,044,000 lb/hr) of steam for the Western coal.

This steam is used for compression energy within the oxygen plant, rather than heat energy.

(7) Steam and Power Generation

Temperature control in the K-T gasifier is accomplished by removal of excess heat. This heat raises low-pressure steam (stream 8) while superheated steam (stream 13) is obtained by cooling effluent from the gasifier in a waste heat boiler. The low-pressure steam provides the steam required for gasification. This by-product steam production can supply the total steam requirement of the facility (about 36,000 → 86,000 kg/hr); extra boiler capacity is usually not required. Additionally, the oxygen plant requirement is 435,000 → 474,000 kg/hr. Even including other steam loads, in this analysis, by-product steam production was found to be in excess of process needs. For the Eastern and Western coals, 308 and 320 x 10^6 kcal/hr (1221 and 1269 x 10^6 Btu/hr) of steam was produced respectively; process requirements were only 293 and 288 x 10^6 kcal/hr (1161 and 1143 x 10^6 Btu/hr). In the case of the Illinois coal, however, the process was steam-deficient, producing 327 x 10^6 kcal/hr (1298 x 10^6 Btu/hr) while requiring 360 x 10^6 kcal/hr (1432 x 10^6 Btu/hr). The deficiency was caused by the much higher steam requirements of the acid-gas removal system in this case. Product gas was charged (financially) for the process, when using the Illinois coal, to account for this steam deficiency. However, a more satisfactory system might be developed by modifying the acid-gas treatment system. A boiler house and its resulting stack-gas emissions were therefore not included in this analysis.

Because these facilities do not require a separate boiler house, electric power was assumed to be purchased. Also, power requirements were not supplied by the process licensor for each of these cases. If we assume that 25 MW of electrical power is required, the resulting power plant for onsite electrical power generation would be too small to be economical. Therefore, because the power house for electrical requirements would be small and because no additional steam is needed in the process, no power house was included and electrical power was assumed to be purchased.

(8) Energy Balance

Energy balances for gasification of the three coals analyzed for feeds in a K-T process are shown in Table XV-5. From this data, the overall process efficiencies, coal-to-gas, are calculated to be 69.8 percent, 74.6 percent and 73.2 percent for Illinois, Eastern, and Western coals, respectively. The lower efficiency for the Illinois coal is caused by the higher steam demand as discussed in the preceding section. These energy balances do not include the electrical input to the system as discussed in the footnote of Table XV-5.

(9) Sulfur Balance

There are essentially only three sulfur-containing effluent streams generated in the Koppers-Totzek process: the product gas (stream 15), sulfur recovered from the Claus plant (stream 19), and the exhaust gases from the Claus tail-gas cleanup system (stream 18). The relative quantities of sulfur in each of these streams for the Illinois, Eastern, and Western coals are listed in Table XV-6. Based on expected performance of the MDEA scrubbing system, the level of H_2S in the product gas was assumed at 250 ppmv.* COS will contribute additional sulfur to the stream as indicated in Table XV-6. The Claus plant off-gas will also contain about 250 ppm sulfur (as SO_2). These fixed factors force a higher apparent efficiency for the Claus plant when used with Illinois coal. This improved efficiency results because SO_2 is recycled to the Claus plant from the tail-gas cleanup system (see Figure XV-1). Higher sulfur emissions are to be expected with Illinois coal because of the higher initial sulfur level in the coal (resulting in higher overall levels of COS in the product gas and greater mass of SO_2 in the cleaned Claus tail-gas); however, the fraction of sulfur recovery is greater in this case.

* In this synopsis the ppm of sulfur in the gas refers to the volumetric concentration of sulfur-containing species, calculated as monomolecular sulfur content.

Table XV-5
Energy Balances for Various Coal Feeds*

Carrier	Illinois Coal		Eastern Coal		Western Coal	
	x 10^6 Btu/hr	x 10^6 kcal/hr	x 10^6 Btu/hr	x 10^6 kcal/hr	x 10^6 Btu/hr	x 10^6 kcal/hr
Coal feed	8137.00	2050.52	7817.00	1969.88	7968.00	2007.94
Total energy input	8137.00	2050.52	7817.00	1969.88	7968.00	2007.94
Product gas	5833.33	1470.00	5833.33	1470.00	5833.33	1470.00
Less product gas for plant fuel†	-153.15	-38.59	0	0	0	0
Heat in excess steam††	0	0	66.00	16.63	126.12	31.78
Sulfur	136.20	34.32	24.53	6.18	19.65	4.95
Sensible heat in sulfur plant exhaust gas	13.80	3.48	5.33	1.34	4.28	1.08
Heat in ungasified carbon	311.64	78.53	303.50	76.48	322.48	81.26
Heat in molten slag	0.42	0.11	0.28	0.07	0.53	0.13
Heat for drying coal	87.32	22.00	75.25	18.96	98.49	24.82
Losses	1907.44	480.67	1508.78	380.22	1563.12	383.92
Total energy output	8137.00	2050.52	7817.00	1969.88	7968.00	2007.94
Process thermal efficiency	$\frac{5833.33-153.15}{8137} \times 100 = 69.8\%$		$\frac{5833.33}{7817} \times 100 = 74.6\%$		$\frac{5833.33}{7968.00} \times 100 = 73.2\%$	

*The electrical power requirements are not included in this energy balance because they have not been specifically developed for each of these cases. If the power requirements were 25 MW, generated onsite, the gross plant efficiency will drop by about 2 percent.

†Charged as plant fuel to raise sufficient process steam.

††Steam generated in excess of plant requirements.

Of the sulfur contained in the feed for the three coals, the amount remaining in the product fuel gas ranged between 2 and 8.8 percent while 90.9 to 97.8 percent is recovered in its elemental form for sale. The Wellman-Lord tail-gas treatment of Claus plant off-gas will contribute between 7 to 24 kg/hr of sulfur to the atmosphere. This accounts for 0.15 to 0.30 percent of the total sulfur in the original feedstock.

Table XV-6
Sulfur Balances*

Carrier	Illinois Coal			Eastern Coal			Western Coal		
Input	kg/hr	(lb/hr)	%	kg/hr	(lb/hr)	%	kg/hr	(lb/hr)	%
Coal feed	15,784	34,797	100.00	3,016	6,650	100.00	2,449	5,398	100.00
Total input	15,784	34,797	100.00	3,016	6,650	100.00	2,449	5,398	100.00
Output									
In product gas									
As H_2S	199	439	1.26	200	441	6.63	194	427	79.1
As COS	123	272	0.78	24	53	0.80	21	47	0.87
As Liquid Sulfur	15,438	34,032	97.8	2,783	6,136	92.27	2,227	4,908	90.92
In tail-gas as SO_2	24	5[illegible]	0.15	9	20	0.30	7	16	0.30
Total output	15,784	34,797	100.00	3,016	6,650	100.00	2,449	5,398	100.00

*For Koppers-Totzek plants producing 35,280 x 10^6 kcal/day (140 x 10^9 Btu/day) of low-Btu fuel gas.

(10) General Comments

The product gas from the K-T process is composed primarily of carbon dioxide, carbon monoxide, and hydrogen with only trace amounts of methane. The heating value of the product gas is 2572 kcal/m^3 (289 Btu/ft^3) for the Eastern and Western coals; for the Illinois coal, the heating value is 2658 kcal/m^3 (298.7 Btu/ft^3) because more CO_2 has been removed in the MDEA processing. The product gas is assumed to be used directly as a fuel gas. The acid-gas removal system, however, can be designed to remove essentially all the CO_2 and H_2S, so that the product gas would also be suitable for methanation to a SNG product gas.

Each K-T gasifier unit can process coal feed rates up to 770 m tons/day (850 short tons/day) and hence produce about 1,250,000 m^3/day (45 x 10^6 ft^3/day) of 75 kcal (300-Btu) gas (reference 1). Thus, approximately 11 gasifiers operating in parallel would be required to supply the 35,280 x 10^6 kcal/day (140 x 10^9 Btu/day) specified as the basis for this study. While operating in parallel, the gasifiers could share common utilities, water cleanup system, and gas cleanup system.

3. DISCUSSION OF POLLUTION CONTROL PROCESSES

The possible pollution sources from the K-T process are limited by the high gasification temperatures (1815 to 1925 degrees C) to the slag, the process wastewater, and the product gas. The nature and treatment of these major waste streams are discussed in this section and shown in Table XV-7.

Table XV-7
Nature and Treatment of Major Waste Streams

Intermediate Waste Stream	Source	Treatment
Coal dust and fines	Coal crushing and drying	Cyclone separators, bag filters enclosure; fed to gasifier
Slag	Gasification and washing of product gas	Clarifier-settler, sludge to landfill or mine-fill
Wastewater	Slag quench, venturi scrubbers, gas washing	Biological
H_2S, COS, SO_2, sulfur	Gasification	Claus plant, Wellman-Lord tail-gas cleanup; sulfur sold

(1) Coal Preparation

Pulverization and drying of the coal is to take place in totally enclosed equipment so that all dusts in any of the effluent streams can be separated in cyclones, bag filters, or precipitators. All these fines can be used as feed for the gasifier. Coal temperatures will be maintained at 80 degrees C (180 degrees F) during coal drying so that no chemical reactions or devolatilization of the feed will occur. The drying gases are not contaminated and can be discharged to the atmosphere after separation from the dried and pulverized coal.

(2) Slag

The coal ash is completely slagged* in the gasifier so that the effluent streams contain minimal amounts of dusts and leachable materials. Particulate matter (entrained slag) leaving the gasifier with the product gas (stream 11) is cooled and collected in venturi scrubbers. This source of solids contains unburned carbon amounting to approximately 5 percent of that charged to the gasifier. Solids [quenched slag (stream 4) and particulates] separated from the process waters can be collected and sent to landfill or mine-fill operations. Since the particulate matter is also slagged material, there should be no leachable contaminants and disposal should pose no environmental problems.

(3) Process Wastewaters and Gas Purification

Removal of particulate matter from the product gas occurs in the primary and secondary venturi scrubbers where the gas is contacted with recirculated cooling water. In the scrubbers, soluble ammonia, hydrogen cyanide, and some acid-gases are absorbed into the water. Because of the high gasification temperatures of 1815 to 1925 degrees C (3300 to

* Heated to the molten state.

3500 degrees F), phenols, pyridines and organics are not formed and the quantities of other soluble contaminants are minimized. A bleed stream from the recirculated water system is continuously fed to the stripper where gaseous NH_3, CO_2, H_2S, and some cyanide are removed and sent to the Claus unit for incineration. In the Claus unit, H_2S is catalytically converted to elemental sulfur. SO_2 contained in the off-gas is treated in a Wellman-Lord tail-gas process. The stripped water is cooled and returned to the recirculation system. Excess water can be bled to the boiler feedwater system for treatment and generation of steam at the gasifier.

Table XV-8 lists data (reference 1) collected at a Kutahya, Turkey, Koppers-Totzek plant in 1972; these data indicate the orders of magnitude for components of interest and possible contaminants. Although specific tests were conducted, pollutants such as phenols, tars, oils, and pyridines were not detected.

(4) Product Gas

Even though the crude product gas is washed in venturi scrubbers and coolers, most of the hydrogen sulfide and carbonyl sulfide generated in the gasifier remain in this gas because of their low solubilities in water. The tertiary amine absorption system leaves only 2 percent (with Illinois coal) to 9 percent (with Western coal) of the total feed sulfur as H_2S and COS in the product gas. These results are a consequence of the design parameter (for this study) of 250 ppmv H_2S in the product gas. Operating conditions with the amine system can be altered to set H_2S concentration in the product gas to other levels, within the operating range of the system.

The product gases delivered by the process (stream 15) at the design conditions set in this study are clean-burning fuels. Flue gases resulting from combustion of the K-T product gases will contain 0.45 kg $SO_2/10^6$ kcal (0.25 lb $SO_2/10$ Btu) of heating value in the fuel gas with Illinois coal, and 0.31 kg $SO_2/10^6$ kcal (0.17 lb $SO_2/10^6$ Btu) for both the Eastern and and Western coals. These emissions compare favorably with the EPA New Source Performance Standards of 2.16 kg $SO_2/10^6$ kcal (1.2 lb $SO_2/10^6$ Btu for the alternative of direct combustion of coal with stack gas scrubbers.

Table XV-8
Koppers Coal Gasification Water Analyses,
Kutahya, Turkey

Sample Location		I	II	III	IV	V
pH value		8.8	8.8	8.9	8.8	8.9
Conductivity	S	7.6	1.8	2.0	1.8	1.8
		.001	.01	.01	.01	.01
CaO	mg/l	78	101	78	135	179
MgO	mg/l	97	161	194	145	113
Ma	mg/l	17.5	17.5	17.5	17.5	17.5
K	mg/l	5.6	8.8	10.0	8.0	8.0
Zn	mg/l	0.01	0.03	0.02	0.02	0.02
Fe	mg/l	0.05	0.22	1.95	0.20	0.64
NH_4	mg/l	0.32	157	184	137	122
NO_2	mg/l	0.02	0.13	4.47	0.24	4.37
NO_3	mg/l	58.2	3.32	13.7	24.7	22.9
PO_4 total	mg/l	1.89	0.81	1.21	0.81	2.70
Cl	mg/l	18	85	96	57	46
SO_4	mg/l	42	216	155	255	109
CN	mg/l	0.26	0.52	12.5	1.4	14.0
H_2S	mg/l	----	-----	Not detected	----	----
$KMnO_4$ consumed	mg/l	8	9	400	11	145
COD	mgO_2/l	14	18	128	16	63
SiO_2	mg/l	14.8	16.0	14.8	19.8	42.6
Suspended solids	mg/l	14	4612	5084	3072	50
Hot residue, 800°C	mg/l	4	3918	4356	2690	46
Stripped residue	mg/l	568	812	940	706	724
Hot residue, 800°C	mg/l	268	550	588	526	512
Cu	mg/l	0.01	0.01	0.01	0.01	0.06

I Cooling water to slag quench tank (stream 5).

II Water from slag quench tank (stream 14).

III Wash water from gas cooler (stream 17).

IV Total water to clarifier.

V Water out of clarifier.

4. COSTS OF POLLUTION CONTROL*

Costs of the pollution control and treatment processes described above are calculated and presented in this section. The major assumptions and conventions adopted here are discussed in Chapter III of this report.

The incremental** capital cost and incremental gas price when using Illinois coal are presented in Tables XV-9a and XV-9b. Similar data for the Eastern coal and the Western coal are summarized in Tables XV-10 and XV-11, respectively.

The total incremental capital requirement of the K-T process for the lower sulfur content Eastern and Western coals is about $15 million; the higher sulfur Illinois coal requires about a $25 million capital investment for pollution control, primarily because of larger acid-gas removal and sulfur recovery systems.

The incremental increase in gas price resulting from pollution control in the K-T process is about $0.10 to $0.15/$10^6$ Btu for the lower sulfur coals; with the Illinois coal, the cost is about $0.20 to $0.25/$10^6$ Btu, depending upon the accounting approach utilized. The higher cost in the case of the Illinois coal is caused by the greater capital requirements and the higher process steam demands (included in "other direct costs").

The derivation of the formulae for calculating the incremental increase in the cost of gas production due to pollution control requirements is presented in Chapter III of this report. Using the discounted cash flor (DCF) method, the required incremental annual cost of gas, X, for the assumed rate of return is:

$$X = N + 0.23816I + 0.0175S + 0.230777W$$

---

* The costs presented here are preliminary estimates; the actual costs of emission control in this process will not be known until a full-scale facility has been constructed and operated.

** Incremental costs in this report refer to that portion of the total plant cost that is assignable to pollution control facilities.

Table XV-9a
Incremental Capital Cost[a] for Pollution Abatement for Koppers-Totzek Process Using Illinois Coal

Item	$ 10^6$	
Gas desulfurization – MDEA	4.2	
Claus plant	3.2	
Wellman-Lord tail-gas cleanup	4.0	
Particulate emission control	2.2	
Wastewater treating	3.6	
Installed equipment cost	17.2	
Project contingency (15%)	2.6	
Incremental plant investment (I)[b]	19.8	
Startup costs (S)[c]	0.5	
	DCF	**Utility**
Interest during construction[d]	4.7	3.3
Working capital (W)[e]	0.7	0.6
Incremental capital investment (C)	25.7	24.4

Notes:

[a]Incremental plant investment, return on investment during construction, and working capital are treated as capital costs in year 0 (the year ending with completion of startup operation).

[b]Installed costs, including engineering design costs, contractors' profit, and overhead, and the contingency includes costs for unexpected site preparation and hardware requirements at 15% of plant investment.

[c]At 20% of incremental gross operating cost.

[d]For the DCF method, computed as the discount rate x incremental plant investment for 1.875 years' average construction period.
$I(1 + i)^n = I(1.12)^{1.875} = 1.2367611$ or 0.2367611 additional investment.

For the utility financing method, computed as the interest rate on debt x incremental plant investment x 1.875 yrs.

[e]Sum of materials and supplies at .9% of incremental plant investment and net receivables at 1/24 of annual incremental revenue.

Table XV-9b
Incremental Operating Costs for Pollution Abatement for Koppers-Totzek Process Using Illinois Coal

Item	$		
Labor			
Direct operating labor (4 men/shift x $5/hr. x 8304 shift hr/man yr)	166,000		
Maintenance labor (1.5% of I)	297,000		
Supervision (15% of direct operating and maintenance labor)	69,500		
Subtotal labor cost		532,500	
Administration and general overhead (60% of labor subtotal)		319,500	
Other direct costs*		6,059,100	
Supplies			
Operating (30% of direct operating labor)	99,800		
Maintenance (1.5% of I)	297,000		
Subtotal supplies		346,800	
Local taxes and insurance (2.7% of I)		504,600	
Incremental gross operating costs			7,792,500
By-product credit (sulfur at $10/LT)		1,197,700	-1,197,700
Net operating cost (N)			6,594,800

*Other direct costs include catalysts and chemicals expended and utilities purchased for the pollution control processes. The high charges in this case reflect the substantially increased cost of the steam requirements for the acid-gas treatment of the Illinois coal.

Table XV-10a
Incremental Capital Cost[a] for Pollution Abatement for Koppers-Totzek Process Using Eastern Coal

Item	$ 10^6	
Gas desulfurization - MDEA	1.9	
Claus plant	1.1	
Wellman-Lord tail-gas cleanup	1.8	
Particulate emission control	2.2	
Wastewater treating	3.6	
Installed equipment cost	10.6	
Project contingency (15%)	1.6	
Incremental plant investment (I)[b]	12.2	
Startup costs (S)[c]	0.7	
	DCF	**Utility**
Interest during construction[d]	2.9	2.1
Working capital (W)[e]	0.4	0.3
Incremental capital investment (C)	16.2	15.3

Notes:

[a]Incremental plant investment, return on investment during construction, and working capital are treated as capital costs in year 0 (the year ending with completion of startup operation).

[b]Installed costs, including engineering design costs, contractors' profit, and overhead, and the contingency includes costs for unexpected site preparation and hardware requirements at 15% of plant investment.

[c]At 20% of incremental gross operating cost.

[d]For the DCF method, computed as the discount rate x incremental plant investment for 1.875 years' average construction period. $I(1 + i)^n = I(1.12)^{1.875} = 1.236761I$ or $0.236761I$ additional investment.

For the utility financing method, computed as the interest rate on debt x incremental plant investment x 1.875 yrs.

[e]Sum of materials and supplies at .9% of incremental plant investment and net receivables at 1/24 of annual incremental revenue.

Table XV-10b
Incremental Operating Costs for Pollution Abatement for Koppers-Totzek Process Using Eastern Coal

Item	$		
Labor			
Direct operating labor (4 men/shift x $5/hr x 8304 shift hr/man yr)	166,000		
Maintenance labor (1.5% of I)	183,000		
Supervision (15% of direct operating and maintenance labor)	52,400		
Subtotal labor cost		401,400	
Administration and general overhead (60% of labor subtotal)		240,800	
Other direct costs*		2,740,600	
Supplies			
Operating (30% of direct operating labor)	49,800		
Maintenance (1.5% of I)	183,000		
Subtotal supplies		232,800	
Local taxes and insurance (2.7% of I)		329,400	
Incremental gross operating costs			3,945,000
By-product credit (sulfur at $10/LT)		215,500	- 215,500
Net operating cost (N)			3,729,500

*Other direct costs include catalysts and chemicals expended and utilities (e.g., cooling water, electrical power) purchased.

Table XV-11a
Incremental Capital Cost[a] for Pollution Abatement for Koppers-Totzek Process Using Western Coal

Item	$ 10^6	
Gas desulfurization -- MDEA	1.5	
Claus plant	1.0	
Wellman-Lord tail-gas cleanup	1.9	
Particulate emission control	2.2	
Wastewater treating	3.6	
Installed equipment cost	10.2	
Project contingency (15%)	1.5	
Incremental plant investment (I)[b]	11.7	
Startup costs (S)[c]	0.7	
	DCF	**Utility**
Interest during construction[d]	2.8	2.0
Working capital (W)[e]	0.4	0.3
Incremental capital investment (C)	15.6	14.7

Notes:

[a]Incremental plant investment, return on investment during construction, and working capital are treated as capital costs in year 0 (the year ending with completion of startup operation).

[b]Installed costs, including engineering design costs, contractors' profit, and overhead, and the contingency includes costs for unexpected site preparation and hardware requirements at 15% of plant investment.

[c]At 20% of incremental gross operating cost.

[d]For the DCF method, computed as the discount rate x incremental plant investment for 1.875 years' average construction period.

$I(1 + i)^n = I(1.12)^{1.875} = 1.2367611$ or 0.2367611 additional investment.

For the utility financing method, computed as the interest rate on debt x incremental plant investment x 1.875 yrs.

[e]Sum of materials and supplies at .9% of incremental plant investment and net receivables at 1/24 of annual incremental revenue.

Table XV-11b
Incremental Operating Costs for Pollution Abatement for Koppers-Totzek Process Using Western Coal

Item		$	
Labor			
Direct operating labor (4 men/shift x $5/hr x 8304 shift hr/man yr)	166,000		
Maintenance labor (1.5% of I)	175,500		
Supervision (15% of direct operating and maintenance labor)	51,200		
Subtotal labor cost		392,700	
Administration and general overhead (60% of labor subtotal)		235,600	
Other direct costs*		2,201,100	
Supplies			
Operating (30% of direct operating labor)	49,800		
Maintenance (1.5% of I)	175,500		
Subtotal supplies		225,300	
Local taxes and insurance (2.7% of I)		315,900	
Incremental gross operating costs			3,370,600
By-product credit (sulfur at $10/LT)		172,800	- 172,800
Net operating cost (N)			3,197,800

*Other direct costs include catalysts and chemicals expended and utilities (e.g., cooling water, electrical power) purchased.

where

N = incremental net operating cost
I = incremental plant investment
S = startup costs
W = incremental working capital.

For the utility financing case, it is:

$$X = N + 0.1198C + 0.0198W$$

where

C = required incremental capital investment
N = as defined above
W = as defined above.

Assuming an annual gas production of G, the incremental cost of gas, due to pollution controls is:

$$\frac{\text{annual cost of gas}}{\text{annual gas production}} = \frac{X}{G}$$

Solutions of the above equations for the incremental cost of gas using the three coals analyzed as possible feeds in this process are shown in Table XV-12.

Table XV-12
Incremental Cost of Gas

Accounting Method	Illinois Coal		Eastern Coal		Western Coal	
	Incremental Annual Cost of Gas ($/yr)	Incremental Cost of Gas ($/10^6 Btu)	Incremental Annual Cost of Gas ($/yr)	Incremental Cost of Gas ($/10^6 Btu)	Incremental Annual Cost of Gas ($/yr)	Incremental Cost of Gas ($10^6 Btu)
DCF	11,535,750	0.24	6,816,410	0.14	6,165,900	0.13
Utility Financing	9,505,800	0.19	5,568,380	0.11	4,964,800	0.10

5. REFERENCES

(1) Farnsworth, J. F., Kamody, J. F., and Mitsak, D. M., "Clean Environment With K-T Process." USEPA: Environmental Aspects of Fuel Conversion Technology, St. Louis, Missouri, May 1974.

(2) "Evaluation of Pollution Control in Fossil Fuel Conversion Processes," Gasification; Section 1: Koppers-Totzek Process, EPA-650/2-74-009a, January 1974.

(3) Farnsworth, J. F., Leonard, H. F., Mitsak, D. M., and Wintrell, R., "Production of Gas from Coal by the Koppers-Totzek Process." IGT Clean Fuels from Coal Symposium, Chicago, Illinois, September 1973.

(4) Farnsworth, J. F., Leonard, H. F., Mitsak, D. M., and Wintrell, R., "The Production of Gas from Coal Through a Commercially Proven Process." Koppers Company, Pittsburgh, Pennsylvania, August 1973.

(5) Leonard, Spike, Personal Communication. Koppers Company, Pittsburgh, Pennsylvania, June 1974.

INTRODUCTION

The following comprehensive bibliography has been compiled to assist persons researching the subject of clean fuels conversion processes. This reference material is divided into five categories:

- General
- Process
- Effluents
- Economics
- Miscellaneous

REFERENCES - General

Blake, R.J. "How Acid-Gas Treating Processes Compare." The Oil and Gas Journal (January 9, 1967), 150-158.

Besselievre, E.B. The Treatment of Industrial Wastes. New York: McGraw-Hill Book Co., 1969.

"Char Oil Energy Development." U.S. Office of Coal Research R&D Report, No. 56, Final Report. Washington, D.C.: U.S. Government Printing Office, 1971.

"Char Oil Energy Development." U.S. Office of Coal Research R&D Report, No. 73, Interim Report, No. 1. Washington, D.C.: U.S. Government Printing Office, 1972.

Chopey, Nicholas P. "Coal Gasification: Can it Stage a Comeback?" Chemical Engineering (April 3, 1972), 44+.

Davies, H.S., J.A. Lacey, and B.H. Thompson. "Processes for the Manufacture of Natural Gas Substitutes." J.I.G.E., Vol. 9 (1969), 375.

Dent, F.J., and D. Hebden. "The Gasification of Oil to Yield High Calorific Value Gases." World Power Conference Moscow 1968, Section A2, 207.

"Design and Operation for Air Pollution Control." Paper presented at the Metropolitan Engineers Council on Air Resources, October 24, 1968.

Dirksen, H.A., and H.R. Linden. Pipeline Gas from Coal by Methanation of Synthesis Gas. Research Bulletin No. 31. Chicago: Institute of Gas Technology, July 1963.

"Electricity from Coal." Mechanical Engineering (January 1959), 24+.

Elliott, M.A. "Research and Progess in the Production and Use of Coal." Technical Paper No. 4. Washington, D.C.: National Resources Planning Board, n.d.

Elliott, M.A., and H.R. Linden. "Gas, Manufactured." Kirk-Othmer Encyclopedia of Chemical Technology, 2nd edition, Vol. 10, New York: Interscience, 1966, 353-442.

"Energy Research Needs." A Report by Resources for the Future, Inc. for the National Science Foundation, October 1971.

"Evaluation of Waste Waters From Petroleum and Coal Processing." Environmental Protection Agency report R2-72-001, December 1972.

Fitzgerald, K.H., and J.A. Richardson. "How Gas Composition Affects Treating Process Selection." Hydrocarbon Processing, Vol. 45, No. 7 (July 1966), 125-129.

FMC Corporation. "Char Oil Energy Development." Research and Development Report No. 56, Interim Report No. 1, prepared for the Office of Coal Research, U.S. Department of the Interior. Washington, D.C.: May 1970.

"Gasification: A Rediscovered Source of Clean Fuel." Science, Vol. 178 (October 6, 1972), 44+.

Geer, M.R. Disposal of Solid Wastes from Coal Mining in Washington, Oregon, Montana. U.S. Department of the Interior, Bureau of Mines, Publication 8430, 1969.

Goar, B.G. "Today's Gas Treating Processes." Oil and Gas Journal (July 12, 1972 and July 19, 1972).

Goar, B.G. "Today's Sulfur Recovery Processes." Hydrocarbon Processing, Vol. 47, No. 9 (September 1968), 248-251.

Handbook of Chemistry and Physics. 44th edition. Cleveland, Ohio: The Chemical Rubber Co.

Hoogendoorn, J. "17 Years of Gas Production From Coal." Gas, Vol. 33 (September 1972).

Johnson, W.B. "Coal Beats Oil Here." Petroleum Refiner, Vol. 35 (December, 1956), 222-228.

Katel, S. "Removing Sulfur Dioxide From Flue Gases." Chemical Engineering Progress, Vol 62, No. 10 (October 1966), 67-73.

Kirk, et. al. Encyclopedia of Chemical Technology.

Kohl, A.L., and F.C. Riesenfeld. Gas Purification. New York: McGraw-Hill, 1960, 346-369.

Kohl, A.L., and F.C. Riesenfeld. "Today's Processes for Gas Purification." Chemical Engineering (June 15, 1959), 127-178.

Lee, A.L., and H.L. Feldkirchner. "Methanation for Coal Hydrogasification." Presented at the Joint Meeting of the Division of Fuel Chemistry and the Division of Petroleum Chemistry of the American Chemical Society, Chicago, September 9, 1970.

Linden, H.R. "Coal (Gasification)." Kirk-Othmer Encyclopedia of Chemical Technology, 2nd Edition, Suppl. Vol. New York: Interscience, 1971, 198-217.

Linden, Henry R. "The Outlook for Synthetic Fuels." Paper presented to the Second Annual Meeting of API, Division of Paper Production, Houston, March 6-8, 1972.

Linden, H.R. "A Reassessment of the Prospects for Coal Gasification." Coal Age, Vol. 76 (May 1971), 73-79.

Linden, H.R., and M.A. Elliott. "High-Btu Gases From Fluid Fuels—Present and Future Methods. Part 2. Production of High-Btu Gas From Natural Gas Liquids and Petroleum Oils." American Gas Journal, Vol. 186 (February 1959), 22-27.

Linden, H.R., J.J. Guyer, and E.S. Pettyjohn. "Production of Natural Gas Substitutes by Pressure Hydrogasification of Oils." A.G.A. Processes (1954), 639-54.

Long, G. "Why Methanate SNG?" Hydrocarbon Processing, Vol. 51, No. 8 (August 1972).

McWilliams, F.G., and R.P. Schuller. "SNG, Naphtha and Low-Sulfur Fuel Oils from Crude Oils Using Commercially Proved Technology." American Institute of Chemical Engineering (November to December 1972).

Meyers, R.A. "Desulfurization of Coal." Science, Vol. 177 (September 29, 1972), 1187+.

Mills, G.A. "Progress in Gasification--U.S. Bureau of Mines." Third American Gas Association Synthetic Pipeline Gas Symposium, Chicago, November 17-18, 1970.

"This Month in Mining - Symposium Sees Hard Times Ahead for Industry In Clean-Up of Tailing and Milling Wastes." Engineering/Mining Journal (May 1970), 102-104.

Nelson, W.L. Petroleum Refinery Engineering. 4th Edition. New York: McGraw-Hill Book Co., 1958.

Perry (ed.). Chemical Engineers' Handbook. New York: McGraw-Hill.

Ray. "Oil Refining Wastes." Sewage Industrial Wastes (November 1958).

Ricketts, T.S., and D.C. Elgin. "Proceedings at the Joint Conference on Gasification Processes." London: Institute of Fuel, 1962, C-1.

Ruggles. "Basic Petrochemical Processes as Waste Sources." Sewage Industrial Wastes (March 1959).

Seglin, L., and R.T. Eddinger. "Coal (to Synthetic Crude Oil)." Kirk-Othmer Encyclopedia of Chemical Technology. 2nd Edition, Suppl. Vol. New York: Interscience, 1971, 178-198.

Smith, and Stinton. Fuels and Combustion. New York: McGraw-Hill, 1952.

"SNG From Hydrocarbon Liquids." From SNG Symposium I sponsored by IGT, March 12, 1973.

Squires, Arthur M. "Clean Power From Coal." Science, Vol. 169, No. 3948 (August 28, 1970).

"The Supply-Technical Advisory Task Force—Synthetic Gas-Coal." Report for the Federal Power Commission by the Synthetic Gas-Coal Task Force, April 1973.

"Synthetic Fuels: What, Which?" Chemical Engineering (April 17, 1972), 62+.

Thompson, B.H., and H.L. Conway. "The Hydrogenation of Hydrocarbons in Relation to the Manufacture of Substitute Natural Gas." Paper presented to the 65th Annual Meeting of the American Institute of Chemical Engineering.

Thompson, B.H., B.B. Majumdar, and H.L. Conway. "The Hydrogenation of Oils to Gaseous Hydrocarbons." J.I.G.E., Vol. 6 (1966), 415.

U.S. Department of the Interior. Prospects for Oil Shale Development--Colorado, Utah, and Wyoming. Washington, D.C.: Government Printing Office, May 1968.

"The U.S. Energy Problem." Inter-Technology Corporation Report C645 presented to the National Science Foundation November, 1971.

von Fredersdorff, C.F., and M.A. Elliott. "Coal Gasification." Chemistry of Coal Utilization. Edited by H.H. Lowry, Suppl. Vol. New York: John Wiley, 1963, 892-1022.

Weston, Merman, and DeMann. "Waste Disposal Problems of the Petroleum Industry." Industrial Wastes. Edited by Rudolfs. American Chemical Society Monograph 118. New York: Reinhold Publishing Corp., 1953.

Worley, M.S. "Trends in Sour Gas Processing." Presented to the Canadian Natural Gas Processing Association, Calgary, Alta., Canada, April 6, 1961.

REFERENCES - Process

American Oil Company. Evaluation of Project H-Coal. Research and Development Report No. 32, prepared for the Office of Coal Research, U.S. Department of the Interior, December 1967.

Asselin, and Sotrmong. "Treating Light Refinery Products." Oil Gas Journal (January 4, 1965).

Auer, W., E. Lorenz, and K.H. Grundler. "A New Catalyst for the CO-Shift Conversion of Sulfur-Containing Gases." Paper No. 9C presented at the 68th National Meeting of the American Institute of Chemical Engineers, February 28 - March 4, 1971.

Calderwood, G.W. "The 'ONIA-GEGI' Process for Cyclic Catalytic Cracking of Liquid Hydrocarbons." A.G.A. Oper. Sec. Proc. - 1958, CEP-58-11.

"COED Coal-to-Crude Process Moves Into Pilot-Plant Stage." The Oil and Gas Journal (October 1967).

"Commercial Potential for the Kellogg Coal Gasification Process." U.S. Office of Coal Research R&D Report No. 38, Final Report PB180358. Springfield, Virginia: National Technical Information Service, 1968.

Consolidated Coal Company. "Pipeline Gas From Lignite Gasification—Feasibility Study." R&D Report No. 16, Interim Report No. 1, prepared for the Office of Coal Research, January 1965.

Consolidated Coal Company. "Low-Sulfur Boiler Fuel Using the Consol CO_2-Acceptor Process." R&D Report No. 16, Interim Report No. 2, prepared for the Office of Coal Research, November 1967.

Consolidated Coal Company. "Phase II, Bench-Scale Research on CSG Process—Studies on Mechanics of Fluo-Solids Systems." R&D Report No. 16, Interim Report No. 3, Book 1, prepared for the Office of Coal Research, January 1970.

Consolidated Coal Company. "Phase II, Bench-Scale Research on CSG Process—Laboratory Physico-Chemical Studies." R&D Report No. 16, Interim Report No. 3, Book 2, prepared for the Office of Coal Research, January 1970.

Consolidated Coal Company. "Phase II, Bench-Scale Research on CSG Process—Operation of the Bench-Scale Continuous Gasification Unit." R&D Report No. 16, Interim Report No. 3, Book 3, prepared for the Office of Coal Research, January 1970.

Corey, R.C. "Bureau of Mines Synthane Process: Research and Development on Converting Coal to Substitute Natural Gas." Presented at the Synthetic Fuels From Coal Conference, Stillwater, Oklahoma, May 1972.

Cover, A.E., W.C. Schreiner, and G.T. Skaperdas. "The Kellogg Coal Gasification Process." American Chemical Society, Division of Fuel Chemistry, Preprint 15, No. 3 (September 1971), 1-11.

Curran, G.P., J.T. Clancey, C.E. Fink, B. Pasek, M. Pell, and E. Gorin. "Development of the CO_2 Acceptor Process Directed Towards Low-Sulfur Boiler Fuel." Report from the Consolidation Coal Company to the Environmental Protection Agency, covering work performed September 1, 1970 - November 1, 1971.

Davies, H.S., K.J. Humphries, D. Hebden, and D.A. Percy. "Applications and Development of the Catalytic Rich Gas Process." Inst. Gas Eng. Comm. 737, J.I.G.E., Vol. 7 (1967), 707.

Davies, H.S., and J.A. Lacey. "The Development of the C.R.G. Process for the Production of S.N.G." Gas Council Research Commission, GC193.

Demeter, J.J., et al. "Synthesis of High-Btu Gas in a Raney-Nickel-Coated Tube-Wall Reactor." U.S. Bureau of Mines Rep. Invest. 7033, Pittsburgh, Pennsylvania, 1967.

Doscher, T.M., R.W. Labelle, L.H. Swatsky, and R.W. Zwicky. "Steam-Drive--A Process for In-Site Recovery of Oil from the Athabasca Oil Sands." A Collection of Papers. Presented to K.A. Clark on the 75th Anniversary of his birthday. Edmonton: Research Council of Alberta, October 1963, 123-141.

Dravid, A.N., C.J. Kuhre, and J.A. Sykes. "Power Generation Using the Shell Gasification Process." Presented at the 3rd International Conference on Fluidized Bed Combustion, Hueston Woods, Ohio, October 29 - November 1, 1972.

Eddinger, R.T., J.F. Jones, and F.E. Blanc. "Development of the COED Process." Chemical Engineering Progress, Vol. 64 (October 1968), 33-38.

Eddinger, R.T., and S.K. Reed. "COED Research Aims at Oil, Gas, and Char From Coal." Coal Age, Vol. 90 (January 1967).

"Engineering Study and Technical Evaluation of the Bituminous Coal Research, Inc. Two-State Super-Pressure Gasification Process." U.S. Office of Coal Research, R&D Report No. 60. Washington, D.C." U.S. Government Printing Office, 1971.

Falkenberry, H.L., and A.V. Slack. "SO_2 Removal by Limestone Injection." Chemical Engineering Progress, Vol. 65, No. 12 (December 1969), 61-66.

Farnsworth, J.F., and R.A. Glenn. "Status and Design Characteristics of the BCR/OCR BI-GAS Pilot Plant." American Chemical Society, Division of Fuel Chemistry, Preprint, Vol. 15, No. 3 (September 1971), 12-31.

Feldmann, H.F., W.G. Biar, H.L. Feldkirchner, C.L. Tsaros, E.G. Shultz, Jr., J. Huebler, and H.R. Linden. "Production of Pipeline Gas by Hydrogasification of Oil Shale." Inst. Gas Technology Research Bulletin, No. 36., Chicago, August 1966.

Field, H.J., and A.J. Forney. "High-Btu Gas via Fluid-Bed Gasification of Caking Coal and Catalytic Methanation." American Gas Association Synthetic Pipeline Gas Symposium, Pittsburgh, November 15, 1966.

FMC Corporation. "Char-Oil-Energy-Development Project COED." R&D Report No. 11, OCR Contract No. 14-01-001-235, prepared for the Office of Coal Research, Vols. I and II, March 1966.

FMC Corporation. "Char-Oil-Energy-Development Project COED." R&D Report No. 11, OCR Contract No. 14-01-001-235, prepared for the Office of Coal Research, February 1967.

FMC Corporation. "Char-Oil-Energy-Development—The Desulfurization of COED Char, Part III." R&D Report No. 56, Interim Report No. 2, prepared for the Office of Coal Research, January 1971.

"FMC s Project COED Makes Desulfurized Char, Sulfur, Hydrogen, and Synthetic Crude Oil From Coal." Engineering and Mining Journal (May 1968).

Forney, A.J., et al. Proceedings of the American Power Conference. Chicago, Illinois: Illinois Institute of Technology, 1970, 428.

Forney, A.J., et al. Society of Petroleum Engineers of AIME, preprint, New Orleans, La., October 1971.

Forney, A.J., S.J. Gasior, W.P. Haynes, and S. Katell. "A Process to Make High-Btu Gas From Coal." U.S. Bureau of Mines Technical Progress Report 24, U.S. Department of the Interior, April 1970.

Forney, A.J., and W.P. Haynes. "The Synthane Coal-to-Gas Process: A Progress Report." American Chemical Society, Division of Fuel Chemistry, Preprint, Vol. 15, No. 3 (September 1971), 32-39.

Forney, A.J., W.P.Haynes, J.J. Elliott, S.J. Gasior, G.E. Johnson, and J.P. Strakey, Jr. "The Synthane Coal-to-Gas Process." Presented at the IGT Symposium on Clean Fuels From Coal, Chicago, Illinois, September 9-14, 1973.

Forney, A.J., and J.P. McGee. "Synthane Process—Research Results and Prototype Plant Design." Paper presented at the Fourth Synthetic Pipeline Gas Symposium cosponsored by the American Gas Association and the U.S. Office of Coal Research, Chicago, October 30-31, 1972.

Frank, M.E., and B.K. Schmid. "Coal Gasification: Design of a Coal-Oil-Gas Refinery. Chemical Engineering Progress, Vol. 69, No. 3 (March 1973), 62.

Frith, J.F.S. "Engineering Aspects of the Synthane Coal Gasification Process." Presented at the Synthetic Fuels From Coal Conference, Stillwater, Oklahoma, May 1972.

Glenn, R.A. "Status of the BCR Two-Stage Super-Pressure Process." Third American Gas Association Synthetic Pipeline Gas Symposium, Chicago, November 17-18, 1970.

Goar, B.B. "Sulfinol Process Has Several Key Advantages." The Oil and Gas Journal (June 30, 1969), 117-120.

Gossom and Stevens. "The Near Ultimate Disposal of Refinery Wastes." Proceedings of the 16th Industrial Waste Conference, Purdue University, 1961.

Grace, R.J., and R.L. Zahradnik. "BI-GAS Program Enters Pilot Plant Stage." Paper presented at the Fourth Synthetic Gas Symposium cosponsored by the American Gas Association and the U.S. Office of Coal Research, Chicago, October 30-31, 1972.

Groenendaal, W., and H.C.A. Van Meuck. "Shell Launches Its Claus Off-Gas Desulfurization Process." Petroleum and Petrochemical International, Vol. 12, No. 9 (September 1972), 54-58.

Gustafson, K.J., and M.J. Healy, Jr. "Removal of Hydrogen Sulfide From Natural Gas/Carbon Dioxide Mixtures With Molecular Sieves." Proceedings of the 1968 Gas Conditioning Conference, University of Oklahoma, Norman, Oklahoma.

Haines, H.W., G.A. Van Wielingan, and G.H. Palmer. "Recover Sulfur With Zeolites." Petroleum Refiner, Vol. 40, No. 4 (April 1961), 123.

Hamilton, G.W. "Gasification of Solid Fuels in the Wellman-Galusha Gas Producer." Paper presented at the Annual Meeting of the American Institute of Mining, Metrallurgical, and Petroleum Engineers, St. Louis, 1961.

Harlow, Shannon, and Sercu. "A Petrochemical Waste Treatment System." Proceedings of the 16th Industrial Waste Conference, Purdue University, 1961.

Hasebe, Dr. N. "Hydrogen Sulfide Removal by Takahax Liquid Purification Process." Secondary Report by the Tokyo Gas Co., Ltd., Tokyo, Japan.

Hegwer, A.M., and R.A. Harris. "Selexol Solves High H_2S/CO_2 Problem." Hydrocarbon Processing, Vol. 49, No. 4 (April 1970), 103-104.

Herbert, W., et. al. "Methanol." U.S. Patent 2,863,527, December 8, 1958.

Hochgesand, G. "Rectisol and Purisol." Industrial Engineering Chemistry, Vol. 62 (July 1970), 37-43.

Hochgesand, Dr. Ing. G., and C.J. Wendt, Jr. "The Purisol Process for Acid Gas Treatment." Proceeding of the 1969 Gas Conditioning Conference, University of Oklahoma, Norman, Oklahoma.

Holden, J.H., G.R. Strimbeck, J.P. McGee, L.F. Willmott, and L.L. Hirst. Operation of Pressure-Gasification Pilot Plant Utilizing Pulverized Coal and Oxygen. A Progress Report. U.S. Bureau of Mines Reports of Investigation 5573. Washington: U.S. Department of the Interior, 1960.

Hoogendoorn, J.C., and J.H. Salomon. "Sasol: World's Largest Oil From-Coal Plant." British Chemical Engineering, Vol. 2 (June 1957), 308-312.

Hubbard, A.B. "Method for Reclaiming Water from Oil-Shale Processing." American Chemical Society, Division of Fuel Chemistry Preprints, Vol. 15, No. 1 (March-April 1971), 21-25.

Hydrocarbon Research, Inc. Project H-Coal Report on Process Development. Research and Development Report No. 26, prepared for the Office of Coal Research. Washington, D.C.: U.S. Department of the Interior, November 1968,

Jennett, E., and R.H. Ackerman, Jr. "An Assessment of the Giammarco-Vetrocoke Process in U.S. Gas Treating Operations—Theory and Practice." Proceedings of the 1964 Gas Conditioning Conference, University of Oklahoma, Norman, Oklahoma.

Jimeson, R.M. "The Possibilities of Solvent Refined Coal." Thesis, George Washington University, Washington, D.C., February 22, 1965.

Jimeson, R.M. "Utilizing Solvent Refined Coal in Power Plants." Chemical Engineering Progress, Vol. 62, No. 10 (October 1966), 53-60.

Jimeson, R.M., and J.M. Grout. "Solvent Refined Coal: Its Merits and Market Potential." Paper presented at the Annual Meeting of American Institute of Mining, Metallurgical and Petroleum Engineers, Washington, D.C., February 16-20, 1969.

Johnson, C.A., K.C. Hellwig, E.S. Johanson, and H.H. Stotler. "Production of Low-Sulfur Fuel Oil From Coal." Presented at the Meeting of the American Chemcial Society, September 13-18, 1970.

Jones, J.F. "Project COED (Char-Oil-Energy-Development)." Presented at the IGT Symposium on Clean Fuels From Coal, Chicago, Illinois, September 1-14, 1973.

Kavlick, B.S. Lee, and F.C. Schora. "Electrothermal Coal Char Gasification." Third Joint Meeting of the Instituto de Ingenieros Quimicos de Puerto Rico and the American Institute of Chemical Engineers, San Juan, May 17-20, 1970.

Khan, A.R., and H.L. Feldkirchner. "Production of High-Methane Content Gas by Steam Reforming of Light Distillates." Advances in Chemistry Series, No. 69. Washington, D.C.: American Chemical Society, 1967, 190-204.

Klein, J.P. "Developments in Sulfinol and Adip Processes Increase Uses." Oil and Gas International, Vol. 10, No. 4 (September 1970), 109-111.

Kloepper, D.L., et al. "Solvent Processing of Coal to Produce a De-Ashed Product." Research and Development Report No. 9, prepared by the Spencer Chemical Division of Gulf Oil Corp. for the Office of Coal Research, 1965.

Knapp, Dr. Helmut. "Low Temperatures Absorption—The Rectisol Process." Proceedings of the 1968 Gas Conditioning Conference. University of Oklahoma, Norman, Oklahoma.

Krueding, A.P. "RCD Isomax Production Route to Today's and Tomorrow's Low Sulfur Residual Fuels." American Institute of Chemical Engineering, 71st National Meeting, February, 1972.

Kutsher, G.S., et al. "Sour-Gas Scrubbing—Allied Chemical Solvent Process." Proceedings of the Natural Gas Processing Association (March 1967), 41-43.

Kutsher, G.S., G.A. Smith, and P.A. Green. "New Sour-Gas Scrubbing by the Solvent Process." The Oil and Gas Journal (March 20, 1967), 116-118.

Lee, B.S. "The Status of the Hygas Program." Third American Gas Association Synthetic Pipeline Gas Symposium, Chicago, November 17-18, 1970.

Lee, B.S., P.B. Tarman, K.C. Youngblut. "Status of HYGAS, Electrothermal Gasification and Steam-Oxygen Gasification Programs." Paper presented at the Fourth Synthetic Pipeline Gas Symposium cosponsored by the American Gas Association and the U.S. Office of Coal Research, Chicago, October 30-31, 1972.

Linton, J.A., and G.C. Tisdall. "Commercial Production of Synthesis Gas From Low Grade Coal." Coke Gas (London), Vol. 19 (November 1957), 442-447.

Loughry, T.F. "The Production of High-Btu Gas with the TPC Process." A.G.A. Proceedings - 1954, 760-772.

Maddox, Dr. R.N., and M.D. Burns. "Designing a Hot Carbonate Process." The Oil and Gas Journal (November 13, 1967), 122-131.

Maddox, Dr. R.N., and M.D. Burns. "Hot Carbonate—Another Possibility." The Oil and Gas Journal (October 9, 1967), 167-173.

Maddox, Dr. R.N., and M.D. Burns. "Solids Processes for Gas Sweetening." The Oil and Gas Journal (June 17, 1968), 90-93.

Milbourne, C.G. "Production of Catalytic Oil Gas from Bunker C Oil in the U.G.I. Cyclic Catalytic Reforming Sets." A.G.A. Proceedings - 1956, 553-556.

Moe, J.M. "SNG From Coal via the Lurgi Gasification Process." Presented at the IGT Symposium on Clean Fuels From Coal, Chicago, Illinois, September 9-14, 1973.

Mosher, D.R., U.D. Marwig, and J.A. Phinney. "Basic Features of the CO_2 Acceptor Gasification Process." American Chemical Society, Division of Fuel Chemistry Preprint, Vol. 15, No. 3 (September 1971), 40-51.

"New Process Removes Stack-Gas Sulfur." The Oil and Gas Journal (July 13, 1970), 49-50.

Nonhebel, G. (ed.). Gas Purification Processes. London: George Newnes, 1964.

Osthaus, K.H., and T.W. Austen. "Production of Gas From a Wide Range of Solid and Liquid Feedstocks by the Koppers-Totzek Process." Paper presented at the Institution of Gas Engineers London and Souther Section Meeting, London, November 20, 1962.

Pittsburg & Midway Coal Mining Co. "Development of a Process for Producing an Ashless, Low-Sulfur Fuel From Coal—Design of Pilot Plant," R&D Report No. 53, Interim Report No. 2, prepared for the Office of Coal Research, June 1971.

Pittsburg & Midway Coal Mining Co. "Development of a Process for Producing an Ashless, Low-Sulfur Fuel From Coal—Volume I, Enginingineering Studies, Part 2, COG Refinery Economic Evaluation Phase I." R&D Report No. 53, Interim Report No. 3, prepared for the Office of Coal Research, September, 1971.

Potter, B.H., and T.L. Craig. "The Wellman-Lord SO_2 Recovery Process." Paper No. 2, presented at the 65th Annual Meeting of the American Institute of Chemical Engineers, New York, November 26-30, 1972.

"Production of High Btu Gas from Light Distillate by Continuous Pressure Hydrogenation." I.E.C. Process Design and Development, Vol. 5 (1966), 247.

Reid, J.M., W.G. Biar, and H.R. Linden. "Natural Gas Supplements by Cyclic-Regenerative Hydrogasification of Oils." IGT Research Bulletin, No. 28, Chicago, 1960.

Reid, J.M., W.J. Merwin, C.G. von Fredersdorff, H.R. Linden, and E.S. Pettyjohn. "Fluid Gasification of Oil." IGT Research Bulletin, No. 16, Chicago, 1953.

Reid, Tamm, and Goldstein. "Isomax Routs to Low Sulfur Fuel Oil." Nat. Petroleum Refiners Association, San Antonio Texas, March 27-28, 1972.

Rich, L.G. Unit Processes of Sanitary Engineering. New York and London: Wiley & Sons, 1963.

Ricketts, T.S. "Modern Methods of Gas Manufacture Including the Lurgi Process." Journal of Inst. Fuel, Vol. 37 (August 1964), 328-341.

Riesenfeld, F.C., and C.L. Blohm. "Acid Gas Removal Processes Compared." Hydrocarbon Processing, Vol. 41, No. 4 (April 1962), 123-7.

Robson, F.L. "Coal Gasification and Advanced Power Cycles." Paper presented at the Third International Conference on Fluidized Bed Combustion.

Robson, F.L., and A.J. Firamonti. "Advanced-Cycle Power Systems Utilizing Desulfurized Fuels." American Chemical Society, Division of Fuel Chemistry Preprints, Vol. 14, No. 2 (May 1970), 79-96.

Ruark, J.R., H.W. Sohns, H.C. Carpenter. Gas Combustion Retorting of Oil Shale Under Anvil Points Lease Agreement: Stage II. U.S. Bureau of Mines Reports of Investigation 7540. Washington: U.S. Department of the Interior, 1971.

Rudolph, P.F.H. "The Lurgi Process Route Makes SNG From Coal." The Oil and Gas Journal, Vol. 71 (January 22, 1973), 90-92.

Rudolph, P.F.H. "The Lurgi Process. The Route to SNG From Coal." Paper presented at the Fourth Synthetic Pipeline Gas Symposium co-sponsored by the American Gas Association and the U.S. Office of Coal Research, Chicago, October 30-31, 1972.

Rudolph, P.F.H. "New Fossil-Fueled Power Plant Process Based on Lurgi Pressure Gasification of Coal." American Chemical Society Division of Fuel Chemistry Prepreints, Vol. 14, No. 2 (May 1970), 13-38.

Ruth, L.A., A.M. Squires, and R.A. Graff. "Desulfurization of Fuels with Half-calcined Dolomite: First Kinetic Data." Environmental Science & Technology, Vol. 5 (1972), 1009.

Sass, A. "The Garrett Coal Gasification Process." Paper to be presented at the Synthetic Fuels From Coal Conference, Oklahoma State University, Stillwater, May 7-8, 1973.

Schlinger, W.G., D.R. Jesse, and J.P. Tassoney (assigned to Texaco, Inc.). "Hydrotorting of Shale to Produce Shale Oil." U.S. Patent 3,565,784. February 23, 1971.

Schmid, B.K., and W.C. Bull. "Production of Ashless, Low-Sulfur Fuels From Coal." Presented at the Symposium on Pollution Control, Division of Fuel Chemistry, American Chemical Society, Washington, D.C., September 12-17, 1971.

Scholz, W.H. "A Low Temperature Scrubbing Process for Gas Purification." Linde A.G. Munich.

Schora, F.C. "The Present Status of the IGT Hydrogasification Process." Proceedings of the 2nd Synthetic Pipeline Gas Symposium, Pittsburgh, November 22, 1968. Arlington, Va.: American Gas Association, 1968, 3-19.

Schora, F.C. "Hydrogasification Process." SME Preprint 69-AIME-92 presented at the 98th Annual Meeting of the American Institute of Mining, Metallurgical and Petroleum Engineers, Washington, D.C., February 16-20, 1969.

Schora, F.C., B.S. Lee, and C.W. Matthews. "The IGT HYGAS Process." Paper presented at the 162nd National Meeting of the American Chemical Society, Division of Fuel Chemistry, Washington, D.C., September 13-17, 1971.

"Selexol Solvent Processes for Acid Gas Removal." Bulletin of the Allied Chemical Corp., 1967.

Selvidge, C.W., J.E. Conway, and R.H. Jensen. "Deep Desulfurization tion of Atmospheric Reduced Crudes by RCD Isomax." Japan Petroleum Institute Meeting, November 1972.

Shearer, H.A. "Coal Gasification: The COED Process Plus Char Gasification." Chemical Engineering Progress, Vol 69, No. 3 (March 1973), 43.

Shultz, E.B. Jr., and H.R. Linden. "High-Pressure Hydrogasification of Petroleum Oils." Institute of Gas Technology Research Bulletin, No. 29, Chicago, 1960.

Smoker, E.H. "Experiences in the Production of High-Btu Gas From Naphtha and Kerosene Using the U.G.I. Cyclic Catalytic Reforming Process." A.G.A. Proceedings - 1953, 852-53.

"SNG Process Description: Lurgi Process for SNG From Coal—American Lurgi Corporation." Pipeline and Gas Journal (February 1973).

Squires, A.M. "The Coalplex: Gas, Gasoline, and Clean Electricity from Coal." Presented at the 65th Annual Meeting of the A.I.Ch.E., New York City, November 26-30, 1972.

"Status of the CO2-Acceptor Process." Proceedings of the Third Synthetic Pipeline Gas Symposium, Rosemont, Illinois, November 17-18, 1970.

"Stretford Removal Process for H_2S is Licensed." The Oil and Gas Journal, Vol. 69 (October 11, 1971), 68-69.

Sudbury, J.D. "Status of the CO_2 Acceptor Program." Paper presented at the Fourth Synthetic Pipeline Gas Symposium cosponsored by the American Gas Association and the U.S. Office of Coal Research, Chicago, October 30-31, 1972.

Sudduth, L.G., et al. "Evaluation of Sulfur-Plant Efficiency—A New Stoichiometric Method." Oil and Gas Journal (December 14, 1970), 102.

"Sulfur Oxide Removal From Power Plant Stack Gas-Sorption by Limestone or Lime, Dry Process." TVA 1968, Contract No. TV-39233A.

"Sulfur Oxide Removal From Power Plant Stack Gas-Use of Limestone in Wet-Scrubbing Process." TVA 1969, Contract No. TV-29233A.

Thornton, D.P., D.J. Ward, and R.A. Erickson. "MRG Process for SNG." Hydrocarbon Processing, Vol. 51, No. 8 (1972), 81.

Tisdall, G.C. "Sasol Operating Experience in Large Scale Pressure Gasification." Proceedings of the 2nd Synthetic Pipeline Gas Symposium, Pittsburgh, November 22, 1968. Arlington, Va.: American Gas Association, 1968, 61-73.

Townsend, F.M., and L.S. Reid. "Newest Sulfur Recovery Process." Petroleum Refiner, Vol. 37, No. 11 (November 1958), 263.

U.S. Department of the Interior. "Final Environmental Statement—Synthane Coal Gasification Pilot Plant to Demonstrate Feasibility of Converting Coal to Substitute Natural Gas." Int. Fes. 72-78, Bureau of Mines, August 22, 1972.

Ward, J.C., G.A. Margheim, and G.O.G. Löf. "Water Pollution Potential of Spent Oil Shale Residues from Above-Ground Retorting." American Chemical Society, Division of Fuel Chemistry Preprints, Vol. 15, No. 1, March-April 1971, 13-20.

Watkins, C.H., and F. Stolfa. "Recent Operating Results With RCD Isomax." Proceedings of the API Midyear Meeting, San Francisco, May 13, 1971.

Weiss, A.J. "The Manufacture of SNG From Naphtha By Use of the CRG Process." Proceedings of the 51st Annual Convention of the Natural Gas Proc. Association, April 1972.

Woebcke, H.N., and J.H. Schroeder. "Stone and Webster Coal Solution Gasification Process." Paper presented at the Synthetic Fuels From Coal Conference, Oklahoma State University, Stillwater, May 1, 1972.

Abegg. "A Plant for the Oxidation of Sulfide-Containing Waste Caustic and Waste Water with Air." Erdol Kohle Erdgas Petrochemie (August 1961).

Arensberg. "The Chemical Removal of Suspended Solids From Waste Water." European Chemical News Pollution Supplement (November 26, 1965).

Barry, C.B. "Reduce Claus Sulfur Emission." Hydrocarbon Processing, Vol. 51, No. 4 (April 1972), 102-106.

Barthel, Y., et al. "Treat Claus Tail Gas." Hydrocarbon Processing, Vol. 50, No. 5 (May 1971), 89-91.

Beavon, D.L. "Add-On Process Slashes Claus Tail Gas Pollution." Chemical Engineering (December 13, 1971), 71-73.

Benger. "The Disposal of Liquid Effluents From Oil Refineries." Fluid Handling (June 1964).

Beychok, M.R. Aquesus Wastes from Petroleum and Petrochemical Plants. 1st Edition. New York: Wiley and Sons, 1967.

Dennis, R., and R.H. Bernstein. "Engineering Study of Removal of Sulfur Oxides from Stack Gases." American Petroleum Institute Report, August 1968.

Diehl, E.K., and R.A. Glenn. "Desulfurized Fuel from Coal by Implant Gasification." National Air Pollution Control Administration Second International Conference on Fluidized Bed Combustion, Oxford, Ohio, October 4-7, 1970.

Eckenfelder. "Industrial Waste Treatment." Industrial Water Engineering (February 1966).

Gurnham. Principles of Industrial Waste Treatment. New York: Wiley and Sons, 1955 .

Harrington, R.E. "Nitrogen Oxides, Sulfur Oxides, and Particulates Control Technology for Fossil Fuel Combustion." Presented at the Lignite Symposium, Bismark, N.D., May 12-13, 1971.

Kirby. "The Separation of Petroleum Oils from Aqueous Effluents." Chemical Engineering (April 1964).

Manual on Disposal of Refinery Wastes. Vol. I. "Waste Water Containing Oil," Vol. III. "Chemical Wastes." Vol. IV. "Sampling and Analysis of Waste Water." American Petroleum Institute, New York.

McNay, L.M. Burning Coal Refuse Banks and the Associated Environmental Problems. U.S. Department of the Interior, Bureau of Mines, Information Circular, 1970.

McNay, L.M. Coal Refuse Fires, an Environmental Hazard. U.S. Department of the Interior, Bureau of Mines, Publication 8515, 1971.

McRae. "Modern Waste Disposal and Recovery in a Petroleum Refinery." Proceedings of the 9th Industrial Waste Conference, Purdue University, 1954.

National Academy of Engineering-National Research Council. Abatement of Sulfur Oxide Emissions from Stationary Combusion Sources. COPAC-2, 1970, 17.

"A New Approach to Desulfurization." The Oil and Gas Journal (November 27, 1967), 74.

Prather, and Gaudy. "Combined Chemical, Physical, and Biological Processes in Refinery Waste Water Purification." API 29th Midyear Meeting, May 1964.

Pylant. "Here's How Petrochemical Companies Dispose of Wastes." Oil and Gas Journal (November 4, 1963).

Slack, A.V. "Removing SO_2 From Slick Gases." Environmental Science and Technology, Vol. 7 (February 1973), 110.

Tieman, J.W. "Controlling SO_2 Emissions From Coal-Burning Boilers." Mining Engineering, Vol. 24 (August 1972), 47-55.

Weston. "Waste Control at Oil Refineries." Chemical Engineering Progress (September 1952).

"Availability and Cost of Light Liquid Hydrocarbon Feedstocks for Domestic Gasification Projects." Report by Bonner and Moore Associates, Inc., for the Gas Supply Committee of the American Gas Association, September 26, 1972.

Bensen, H.E. "Hot Carbonate Plants: How Pressure Affects Costs." Petroleum Refiner, Vol. 40, No. 4, 107-108.

Bresler, S.A., and J.D. Ireland. "Substitute Natural Gas: Processes, Equipment, Costs." Chemical Engineering, Vol. 79, No. 23 (1972), 94.

Consolidated Coal Company. "Pipeline Gas From Lignite Gasification—Current Commercial Economics." R&D Report No. 16, Interim Report No. 4, prepared for the Office of Coal Research, January 1970.

"The Cost of Clean Water." Industrial Waste Profile No. 5, Petroleum Refining, Volume III, U.S. Department of the Interior, Federal Water Pollution Control Administration, November 1967.

Danielson, V.A., and D.H. White, Jr. Waste Disposal Costs at Two Coal Mines in Kentucky and Alabama. U.S. Department of the Interior, Bureau of Mines, Pub. 8406, 1969.

"Depreciation Guidelines and Rules." U.S. Treasury Department, Internal Revenue Service, Publication No. 456, July 1962, revised August 1964.

Edmisten, Norman G., and Francis L. Bunyard. "A Systematic Procedure for Assessing the Cost of Controlling Particulate Emissions from Industrial Sources." Paper No. 69-103.

Forbes, and Witt. "Estimate Cost of Waste Disposal." Petroleum Refiner (August 1965).

Frank, M.E., and B.K. Schmid. "Economic Evaluation and Process Design of a Coal-Oil-Gas (COG) Refinery." Presented at the Symposium on Conceptual Plants for the Production of Synthetic Fuels From Coal, 65th Annual Meeting of the American Institute of Chemical Engineers, New York, N.Y., November 26-30.

Frankel, R.J. "Technologic and Economic Interrelationships Among Gaseous, Liquid, and Solid Wastes in the Coal, Energy Industry." WPCF Journal, Vol. 40 (May 1968), 779-788.

Guthries, K.M. "Capital Cost Estimating." Chemical Engineering Progress (March 24, 1969), 114.

Hall, R.N., and L.H. Yardumian. "The Economics of Commercial Shale Oil Production by the TOSCO II Process." Presented at 61st Annual American Institute of Chemical Engineers Meeting, Los Angeles, December 1968.

Hamilton, G.W. "Gasification of Solid Fuels." Cost Engineering, Vol. 8 (July 4, 1963).

Henry, J.P., Jr., and B.M. Louks. "An Economic Comparison of Processes for Producing Pipeline Gas (Methane) from Coal." Presented at the American Chemical Society meeting, Chicago, September 1970.

Henry, J.P., Jr., and B.M. Louks. "An Economic Study of Pipeline Gas Production From Coal." Chemical Technology (1971), 239+.

Katell, S. "A Cost Analysis of an Oil Shale Installation in Colorado." Government exhibit G-667, Bureau of Land Management Colorado Contests 359-360 (U.S. Department of the Interior, 1967).

Lenhart, A.F. "The TOSCO Process-Economic Sensitivity to the Variables of Production." Proceedings of the American Petroleum Institute, Refining Deivision, 1969, 907-924.

Maddox, Dr. R.N., and M.D. Burne. "Economical New Sour-Gas Treating Methods Available." The Oil and Gas Journal (January 22, 1968), 91-94.

Murray, R.G. "Economic Factors in the Production of Shale Oil." 74th National Western Mining Conference, Denver, Colorado, February 1971.

O'Connor, John R., and Joseph F. Citarella. "An Air Pollution Control Cost Study of the Steam-Electric Power Generating Industry." Paper No. 69-102, Air Pollution Control Association Annual Meeting, New York City, June 22-26, 1969.

Pittsburgh and Midway Coal Mining Company. Economics of a Process to Produce Ashless, Low-Sulfur Fuel from Coal. Research and Development Report No. 53, Interim Report No. 1, prepared for the Office of Coal Research, U.S. Department of the Interior (Washington, D.C., June 1969).

Pittsburg & Midway Coal Mining Co. "Economic Evaluation of a Process to Produce Ashless, Low-Sulfur Fuel From Coal." R&D Report No. 53, Interim Report No. 1, prepared for the Office of Coal Research, June 1970.

Prater, and Antonacci. "Find Packaged Sewage Plant Costs." Petroleum Refiner (February, 1966).

Ralph M. Parsons Company. Feasibility Report Consol Synthetic Fuel Process Synthetic Crude Production. Research and Development Report No. 45, Interim Report No. 2, prepared for the Office of Coal Research, U.S. Department of the Interior (Washington, D.C., July 1969).

Roberts, P.V. "Comparative Economics of Tar Sands Conversion Processes." Presented at the American Chemical Society meeting, Chicago, September 1970.

Robson, F.L., A.J. Giramonti, G.P. Lewis, and G. Gruber. "Technological and Economic Feasibility of Advanced Power Cycles and Methods of Producing Nonpolluting Fuels for Utility Power Stations." Report from United Aircraft to National Air Pollution Control Administration, United States Department of Health, Education and Welfare, December, 1970.

Shaver, Robert G. "Study of Cost of Sulfur Oxide and Particulate Control Using Solvent Refined Coal." General Technologies Corp. report presented to the U.S. Department of Health, Education and Welfare, Contract #CPA 22-69-82, April, 1970.

Sheldrick, Michael G. "Coal Gasification Warms Up." Chemical Engineering (July 12, 1971), 59+.

Sheldrick, M.G. "Synthetic Gas: Increased Emphasis on Cost." Chemical Engineering (December 11, 1972), 59+.

Slack, A.V. "Economic Factors in SO_2 Recovery of Sulfur Oxides from Power Plant Stack Gas." Paper No. 69-142, 62nd Annual Meeting of the Air Pollution Control Association, New York City, June 22-26, 1969.

Thomas, T.L., and E.L. Clark. "Molecular Sieves Reduce Economic Operational Process Problems." The Oil and Gas Journal (March 29, 1967), 112-115.

Tsaros, C.L., and T.K. Dubramanian. "Electrothermal Hygas Process, Escalated Costs." O.C.R. Contract 14-01-001-381, Report No. 22, Interim No. 6, February 1971.

Tsaros, C.L., and T.J. Joyce. "Comparative Economics of Pipeline Gas From Coal Processes," Proceedings of 2nd Synthetic Gas Symposium, Pittsburgh, Pa., November 22, 1968, New York: American Gas Association, 1969, 133-48.

United Aircraft Research Laboratories. "Technological and Economic Feasibility of Advanced Power Cycles and Methods of Producing Non-polluting Fuels for Power Stations. Final Report for the National Air Pollution Control Administration, Contract CPA 22-69-114. Washington, D.C.: U.S. Government Printing Office, December 1970.

U.S. Department of the Interior. "An Economic Evaluation of Synthane Gasification of Pittsburgh Coal at 1000 psia Followed by Shift Conversion, Purification, and Single-Stage Tube Wall Methanation—250 Million SCFD High-Btu-Gas Plant." Report No. 72-9A. Bureau of Mines, October 1971.

U.S. Department of the Interior. "An Economic Evaluation of Fluidized Gasification at 40 Atmospheres Followed by Shift Conversion, Purification, and Single-Stage Hot-Gas Recycle Methanation (integrated Plant Including Mine)—250 Million SCFD High-Btu-Gas Plant." Report No. 68-8, Revised. Bureau of Mines, April 8, 1969.

Alberts, L.W., et al. Chemical Engineering Progress, Vol 48 (1952), 486.

Beychok, M. "Extraction." Manual on Disposal of Refinery Wastes. Washington, D.C.: American Petroleum Institute, to be published.

"Bituminous Coal Facts." National Coal Association, 1968 Edition.

Brant, V.L., and B.K. Schmid. "Pilot Plant for De-Ashed Coal Production." Chemical Engineering Progress, Vol. 65, No. 12 (December 1969), 55-60.

Camp, F.W. The Tar Sands of Alberta, Canada. Denver, Colorado: Cameron Engineers, 1970.

"Control Techniques for Sulfur Oxide Air Pollutants." U.S. Department of Health, Education and Welfare, January 1969.

"Feasibility Study of a Coal Slurry Feeding System for High Pressure Gasifiers." U.S. Office of Coal Research, R&D Report No. 68, Final Report, Washington, D.C.: U.S. Government Printing Office, 1972.

DeCarlo, J.A., E.T. Sheridan, and Z.E. Murphy. "Sulfur Content of United States Coals." U.S. Bureau of Mines Information Circular No. 8312, Washington, D.C. 1966.

"Desulfurization Refinery Capacities." Environmental Science and Technology, Vol. 7, No. 6 (June 1973), 494+.

Gustafson, R.E. "Shale Oil." Kirk-Othmer Encyclopedia of Chemical Technology. 2nd Edition, Vol. 18. New York: Interscience, 1966, 1-20.

Holder, H.L. "Diglycolamine—A Promising New Acid-Gas Remover." The Oil and Gas Journal (May 2, 1966), 83-86.

Impurities in Petroleum. Petreco Manual, Petrolite Corp., 1958.

Johnson, J.O., and R.L. Fleming. "Oil Recovery and Solids Removal by Centrifugal Means." Paper presented at the Oklahoma Industrial Waste Conference, 1964.

Lewis, P.S., et al. American Chemical Society, Division of Fuel Chemistry Preprints, September 1971, 52.

Linden, H.R., and E.S. Pettyjohn. "Selection of Oils for High-Btu Oil Gas." IBT Research Bulletin, No. 12, Chicago, 1952.

Lurgi Study Group Report. London: The Gas Council and National Coal Board, October 1963.

Matthews, C.W. "Coal Gasification for Electrical Power." Paper presented at the 34th American Power Conference, Chicago, April 18-20, 1972.

Maugh, Thomas H., II. "Gasification: A Rediscovered Source of Clean Fuel." Science, Vol. 178 (October 6, 1972), 44.

McKetta, J.J. Jr. (ed.). Advances in Petroleum Chemistry and Refining. Volume 6. New York: Interscience Publishers, 1964, 315-448.

Moseley, J.C., and J.F. Malina. "Relationships Between Selected Physical Parameters and Cost Responses for the Deep-Well Disposal of Aqueous Industrial Wastes." Center for Research in Water Research in Water Resources, the University of Texas at Austin, Civil Engineering Department, CRWR 28, August 1968.

"NG/SNG Handbook." Hydrocarbon Processing, Vol. 50, No. 4 (April 1971), 93-132.

"1971 Refining Processes Handbook." Hydrocarbon Processing, Vol. 51, No. 9 (September 1972), 150-184.

Office of Coal Research. "Annual Report." U.S. Department of the Interior, 1973.

Perry, Harry. "Oil Shale Development Non-Technologic Factors." Paper presented at the 1969 meetings of the American Institute of Mining, Metallurgical, and Petroleum Engineers, Preprint No. 69-AIME-77, 17.

A Plant Engineer's Guide to the Literature on Air and Water Pollution. American Institute of Plant Engineers. The John Crerer Library, 1970.

"Pollutant Control Equipment." Power (June 1971).

"Project Clean Air." University of California Research Reports, September 1, 1970.

Publications and Materials. American Petroleum Institute, 1973.

Spargins, F.K. "Mining at Athasbasca--A New Approach to Oil Production." Journal of Petroleum Technology (October 1967), 1337-1343.

A Survey of R&D Projects Directed Toward the Conversion of Coal to Gaseous and Liquid Fuels. Arlington, Va.: American Gas Association, November 1971 (Cat. No. H31791).

"Tar Sand Mining--Start of New Era." Eng. Mining Journal, Vol. 168 (December 1967), 65-71.

Tsaros, C.L. Institute of Gas Technology presentation before the Coal Gasification Panel of the National Academy of Engineering. Washington D.C., June 1971.

U.S. Department of the Interior. Prospects for Oil Shale Development--Colorado, Utah, and Wyoming. Washington, D.C.: Government Printing Office, May 1968.

Wett, Ted. "Petrochemical Feedstocks Face Ecology Energy Pinch." Oil and Gas Journal (September 4, 1972), 96.

TECHNICAL REPORT DATA
(Please read Instructions on the reverse before completing)

1. REPORT NO. EPA-450/3-75-028	2.	3. RECIPIENT'S ACCESSION NO.
4. TITLE AND SUBTITLE Emissions from Processes Producing Clean Fuels		5. REPORT DATE March 1974-Date of issue
		6. PERFORMING ORGANIZATION CODE
7. AUTHOR(S) F. Glazer, A. Hershaft, & R. Shaw		8. PERFORMING ORGANIZATION REPORT NO. 9075-015
9. PERFORMING ORGANIZATION NAME AND ADDRESS Booz·Allen & Hamilton, Inc. 4733 Bethesda Avenue Bethesda, Md. 20014		10. PROGRAM ELEMENT NO.
		11. CONTRACT/GRANT NO. 68-02-1358
12. SPONSORING AGENCY NAME AND ADDRESS Environmental Protection Agency Office of Air Quality Planning & Standards Research Triangle Park, North Carolina 27711		13. TYPE OF REPORT AND PERIOD COVERED Final
		14. SPONSORING AGENCY CODE
15. SUPPLEMENTARY NOTES		

16. ABSTRACT

Processes for converting coal, oil and shale to clean fuels were studied. Most of the processes considered have not yet been developed to commercialization. Based on preliminary data and engineering estimates developed, it can be concluded that:

(1) Unit processes apparently exist to provide adequate control of most waste streams from clean-fuel plants, although some pollutants remain difficult to treat;

(2) The pollutant emissions from clean-fuel processes will, in general, be relatively low when compared to emissions from alternative uses of the raw fuel;

(3) The total costs of pollutant control (1973 basis) for achieving low levels of plant emissions, in high-Btu coal gasification processes, range from 15 to 30 cents per million Btu and can be expected to increase in proportion to the severity of the emission controls required;

(4) Low-Btu gasification followed by desulfurization may be considered as a pollution control system because it permits the combustion of coal with decreased emissions. In that case the overall cost of pollution control is about $0.65/10^6$ Btu of gas produced. (Bibliography included.)

17. KEY WORDS AND DOCUMENT ANALYSIS

a. DESCRIPTORS	b. IDENTIFIERS/OPEN ENDED TERMS	c. COSATI Field/Group
Fuels	Fuel conversion	21/D
Coal gasification	Sulfurous emissions	13/H
Air Pollution		13/B
Desulfurization		7/A

18. DISTRIBUTION STATEMENT Unlimited	19. SECURITY CLASS *(This Report)* Unclassified	21. NO. OF PAGES 464
	20. SECURITY CLASS *(This page)* Unclassified	22. PRICE

EPA Form 2220-1 (9-73)