United States
Environmental Protection
Agency

Office of Air Quality
Planning and Standards
Research Triangle Park NC 27711

EPA-450/3-85-022a
April 1987

Air

EPA

Polymeric Coating of Supporting Substrates — Background Information for Proposed Standards

Draft
EIS

NSPS

EPA-450/3-85-022a

Polymeric Coating of Supporting Substrates — Background Information for Proposed Standards

Emission Standards and Engineering Division

U.S. Environmental Protection Agency
Office of Air and Radiation
Office of Air Quality Planning and Standards
Research Triangle Park, North Carolina 27711

April 1987

This report has been reviewed by the Emission Standards and Engineering Division of the Office of Air Quality Planning and Standards, EPA, and approved for publication. Mention of trade names or commercial products is not intended to constitute endorsement or recommendation for use. Copies of this report are available through the Library Services Office (MD-35), U.S. Environmental Protection Agency, Research Triangle Park NC 27711, or from National Technical Information Services, 5285 Port Royal Road, Springfield VA 22161.

ENVIRONMENTAL PROTECTION AGENCY

Background Information
and Draft
Environmental Impact Statement
for the Polymeric Coating of Supporting Substrates

Prepared by:

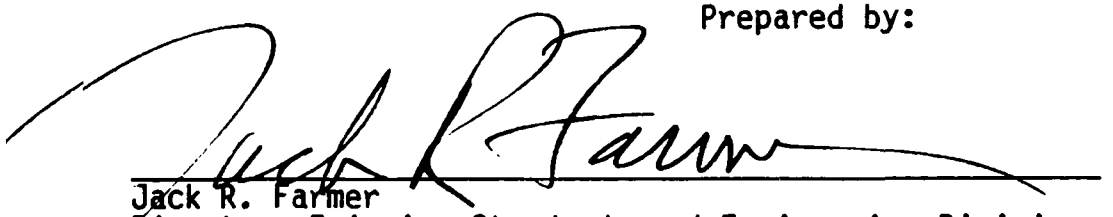

4/30/87
(Date)

Jack R. Farmer
Director, Emission Standards and Engineering Division
U. S. Environmental Protection Agency
Research Triangle Park, N.C. 27711

1. The proposed standards of performance would limit emissions of volatile organic compounds (VOC's) from new, modified, and reconstructed facilities that perform polymeric coating of supporting substrates. Section 111 of the Clean Air Act (42 U.S.C. 7411), as amended, directs the Administrator to establish standards of performance for any category of new stationary source of air pollution that ". . . causes or contributes significantly to air pollution which may reasonably be anticipated to endanger public health or welfare."

2. Copies of this document have been sent to the following Federal Departments: Labor, Health and Human Services, Defense, Agriculture, Commerce, Interior, and Energy; the Council on Environmental Quality; State and Territorial Air Pollution Program Administrators; EPA Regional Administrators; Association of Local Air Pollution Control Officials; Office of Management and Budget; and other interested parties.

3. The comment period for review of this document is 75 days from the date of publication of the proposed standard in the Federal Register. Mr. C. Douglas Bell may be contacted at (919) 541-5578 regarding the date of the comment period.

4. For additional information contact:

   Mr. James C. Berry
   Chemicals and Petroleum Branch (MD-13)
   U. S. Environmental Protection Agency
   Research Triangle Park, N.C. 27711
   Telephone: (919) 541-5671

5. Copies of this document may be obtained from:

   U. S. EPA Library (MD-35)
   Research Triangle Park, N.C. 27711
   Telephone: (919) 541-2777

   National Technical Information Service
   5285 Port Royal Road
   Springfield, Va. 22161

TABLE OF CONTENTS

		Page
List of Figures		vii
List of Tables		viii
CHAPTER 1	SUMMARY	1-1
1.1	Regulatory Alternatives	1-1
1.2	Environmental Impact	1-3
1.3	Economic Impacts	1-5
CHAPTER 2	INTRODUCTION	2-1
2.1	Background and Authority for Standards	2-1
2.2	Selection of Categories of Stationary Sources	2-4
2.3	Procedure for Development of Standards of Performance	2-6
2.4	Consideration of Costs	2-8
2.5	Consideration of Environmental Impacts	2-9
2.6	Impact on Existing Sources	2-10
2.7	Revision of Standards of Performance	2-11
CHAPTER 3	PROCESSES AND POLLUTANT EMISSIONS	3-1
3.1	Industry Description	3-2
3.2	Raw Materials	3-7
3.3	Processes and Their Emissions	3-9
3.4	Baseline Emission Level	3-19
3.5	References for Chapter 3	3-22
CHAPTER 4	EMISSION CONTROL TECHNIQUES	4-1
4.1	Introduction	4-1
4.2	VOC Emission Capture Systems	4-1
4.3	VOC Emission Control Systems	4-10

TABLE OF CONTENTS (continued)

		Page
4.4	VOC Emission Control Systems for Coating Mix Preparation Equipment and Solvent Storage Tanks	4-32
4.5	Low-Solvent Coatings	4-36
4.6	References for Chapter 4	4-37
CHAPTER 5	MODIFICATION AND RECONSTRUCTION	5-1
5.1	Provisions for Modification and Reconstruction	5-1
5.2	Applicability to Polymeric Coating of Supporting Substrates	5-3
5.3	References for Chapter 5	5-7
CHAPTER 6	MODEL PLANTS AND REGULATORY ALTERNATIVES	6-1
6.1	Model Plants	6-1
6.2	Regulatory Alternatives	6-12
6.3	References for Chapter 6	6-18
CHAPTER 7	ENVIRONMENTAL AND ENERGY IMPACTS	7-1
7.1	Air Pollution Impacts	7-1
7.2	Water Pollution Impacts	7-5
7.3	Solid Waste Impacts	7-7
7.4	Energy Impacts	7-8
7.5	Nationwide Fifth-Year Impacts	7-9
7.6	Other Environmental Impacts	7-9
7.7	Other Environmental Concerns	7-9
7.8	References for Chapter 7	7-38
CHAPTER 8	COSTS	8-1
8.1	Cost Analysis of Regulatory Alternatives	8-1

TABLE OF CONTENTS (continued)

		Page
8.2	Other Cost Considerations	8-6
8.3	References for Chapter 8	8-28
CHAPTER 9	ECONOMIC ANALYSIS	9-1
9.1	Industry Profile	9-1
9.2	Economic Impact Analysis	9-32
9.3	Socioeconomic and Inflationary Impacts	9-43
9.4	References for Chapter 9	9-51
APPENDIX A	EVOLUTION OF THE BACKGROUND INFORMATION DOCUMENT	A-1
APPENDIX B	INDEX TO ENVIRONMENTAL IMPACT CONSIDERATIONS	B-1
APPENDIX C	EMISSION SOURCE TEST DATA	C-1
C.1	EPA-Sponsored Test at Polymeric Coating Plant	C-1
C.2	EPA-Sponsored Tests for Related Industries	C-6
C.3	Plant-Wide Solvent Recovery Efficiencies at Polymeric Coating Plants	C-10
APPENDIX D	EMISSION MEASUREMENT AND MONITORING	D-1
D.1	Emission Measurement Test Program and Methods	D-1
D.2	Performance Test Methods	D-8
D.3	Monitoring Systems and Devices	D-20
D.4	Test Method List and References	D-26

LIST OF FIGURES

		Page
Figure 3-1	Solvent-Borne Polymeric Coating Operation and VOC Emission Locations.....	3-10
Figure 3-2	Three Typical Coating Application Equipment Configurations.....	3-13
Figure 4-1	Application/Flashoff Area Hood Designs.....	4-11
Figure 4-2	Flow Diagram of a Two-Unit, Fixed-Bed Adsorber.....	4-14
Figure 4-3	Fluidized-Bed Carbon Adsorber.....	4-19
Figure 4-4	Schematic of Condensation System Using Nitrogen.....	4-24
Figure 4-5	Diagram of Conservation Vent.....	4-33
Figure C-1	Solvent/Process Flow Diagram--Plant B.....	C-13
Figure C-2	Solvent Block Flow Diagram--Plant B.....	C-14
Figure C-3	Process Schematic and Sample Locations--Plant C.....	C-15
Figure C-4	Solvent Recovery Efficiency Data--Plant A.....	C-16
Figure C-5	Solvent Recovery Efficiency Data--Plant B.....	C-17
Figure C-6	Solvent Recovery Efficiency Data--Plant C.....	C-18

LIST OF TABLES

		Page
Table 1-1	Environmental and Economic Impacts of Various Regulatory Alternatives Compared to Alternative I (Baseline) in the Fifth Year (1990).....	1-4
Table 1-2	Matrix of Environmental and Economic Impacts of Regulatory Alternatives for Coating Operations.....	1-6
Table 3-1	Major End Uses of Coated Substrates.....	3-3
Table 3-2	Distribution of Plants that Apply Polymer Coatings to Substrates by Number of Coating Lines.....	3-5
Table 3-3	Number of Plants that Apply Coatings to Supporting Substrates by State.....	3-6
Table 3-4	Solvent and Solids Content of Polymeric Coatings.....	3-8
Table 3-5	Coating Applicator Parameters.....	3-15
Table 3-6	State Regulations for VOC Emissions From Polymeric Coating Sources.....	3-20
Table 4-1	Coefficients of Entry for Selected Hood Openings.....	4-5
Table 4-2	Range of Capture Velocities.....	4-6
Table 4-3	VOC Emission Control Devices Used by Polymeric Coating Plants.....	4-12
Table 4-4	Process Parameters for Polymeric Coating Plants Controlled by Fixed-Bed Carbon Adsorbers.....	4-16
Table 4-5	Process Parameters of Plant B Fluidized-Bed Carbon Adsorber System.....	4-22
Table 4-6	Range of Process Parameters for Polymeric Coating Plants Using Inert Air Condensation Systems.....	4-26
Table 4-7	Typical Process Parameters for Polymeric Coating Plants Using Incinerators.....	4-29
Table 6-1	Model Solvent Storage Tank Parameters.....	6-3

LIST OF TABLES (continued)

		Page
Table 6-2	Model Coating Mix Preparation Equipment Parameters.....	6-4
Table 6-3a	Model Coating Operation Parameters for Carbon Adsorber or Incinerator Control Options (Metric Units).....	6-6
Table 6-3b	Model Coating Operation Parameters for Carbon Adsorber or Incinerator Control Options (English Units).....	6-7
Table 6-4a	Model Coating Operation Parameters for Condensation Control Option (Metric Units).....	6-8
Table 6-4b	Model Coating Operation Parameters for Condensation Control Option (English Units).....	6-9
Table 6-5	Model Coating Operation Parameters for Substrate Type and Consumption.....	6-10
Table 6-6	Regulatory Alternatives for Solvent Storage Tanks.....	6-13
Table 6-7	Regulatory Alternatives for Coating Mix Preparation Equipment.....	6-15
Table 6-8	Regulatory Alternatives for Coating Operations.....	6-16
Table 7-1	Annual Air Pollution Impacts of the Regulatory Alternatives and VOC Emission Reduction Beyond Baseline for Model Solvent Storage Tanks.....	7-10
Table 7-2	Annual Air Pollution Impacts of the Regulatory Alternatives and VOC Emission Reduction Beyond Baseline for Model Coating Mix Preparation Equipment.....	7-12
Table 7-3	Annual Air Pollution Impacts of the Regulatory Alternatives and VOC Emission Reduction Beyond Baseline for Model Coating Operations.....	7-13
Table 7-4	Annual Secondary Air Pollution Impacts for Particulate Matter Emissions From Electrical Energy Generation for the Control Equipment.....	7-15

LIST OF TABLES (continued)

		Page
Table 7-5	Annual Secondary Air Pollution Impacts for Sulfur Oxide Emissions From Electrical Energy Generation for the Control Equipment.....	7-17
Table 7-6	Annual Secondary Air Pollution Impacts for Nitrogen Oxide Emissions From Electrical Energy Generation for the Control Equipment.....	7-19
Table 7-7	Annual Secondary Air Pollution Impacts From the Combustion of Natural Gas for the Control Equipment.....	7-21
Table 7-8	Annual Secondary Air Pollution Impacts for Particulate Matter Emissions From Steam Generation for the Control Equipment.....	7-22
Table 7-9	Annual Secondary Air Pollution Impacts for Sulfur Oxide Emissions From Steam Generation for the Control Equipment.....	7-23
Table 7-10	Annual Secondary Air Pollution Impacts for Nitrogen Oxide Emissions From Steam Generation for the Control Equipment.....	7-24
Table 7-11	Annual Secondary Air Pollution Impacts for Carbon Monoxide Emissions From Steam Generation for the Control Equipment.....	7-25
Table 7-12	Annual Wastewater Discharges and Wastewater VOC Emissions From the Fixed-Bed Carbon Adsorber Control of Model Mix Preparation Equipment.....	7-26
Table 7-13	Annual Wastewater Discharges From the Fixed-Bed Carbon Adsorber Control of Model Coating Operations.....	7-27
Table 7-14	Annual Wastewater VOC Emissions From the Fixed-Bed Carbon Adsorber Control of Model Coating Operations.....	7-28
Table 7-15	Annual Solid Waste Impacts of the Regulatory Alternatives on the Model Coating Mix Preparation Equipment and Coating Operations.....	7-29
Table 7-16	Annual Electrical Energy Requirements for the Control Equipment of Model Coating Mix Preparation Equipment and Coating Operations.....	7-30

LIST OF TABLES (continued)

		Page
Table 7-17	Annual Natural Gas Requirements for the Incinerator Control of Model Coating Operations	7-32
Table 7-18	Annual Steam Requirements for the Control Equipment for Model Coating Mix Preparation Equipment and Model Coating Operations	7-33
Table 7-19	Total Annual Energy Demand of Control Equipment for the Model Coating Mix Preparation Equipment and Coating Operations	7-34
Table 7-20	Fifth-Year Impacts of Various Regulatory Alternatives for Coating Lines	7-36
Table 7-21	Fifth-Year Impacts of Various Regulatory Alternatives over Baseline for Coating Lines	7-37
Table 8-1	Basis for Estimating Annualized Costs--New Facilities	8-8
Table 8-2	Capital and Annualized Costs for Solvent Storage Tanks	8-9
Table 8-3	Capital and Annualized Costs for Coating Mix Preparation Equipment	8-10
Table 8-4	Capital and Annualized Costs for Coating Operations	8-11
Table 8-5	Capital and Annualized Costs of Conservation Vents for Solvent Storage Tanks	8-12
Table 8-6	Capital and Annualized Costs of Pressure Relief Valves for Solvent Storage Tanks	8-13
Table 8-7	Capital and Annualized Costs for Common Carbon Adsorber for Control of Solvent Storage Tanks	8-14
Table 8-8	Capital and Annualized Costs of Conservation Vents for Coating Mix Preparation Equipment	8-15
Table 8-9	Capital and Annualized Costs for Common Carbon Adsorber for Control of Coating Mix Preparation Equipment	8-16

LIST OF TABLES (continued)

		Page
Table 8-10	Capital and Annualized Costs for Carbon Adsorber Control of Model Operations--Regulatory Alternative I.....	8-17
Table 8-11	Capital and Annualized Costs for Carbon Adsorber Control of Model Operations--Regulatory Alternative II.....	8-18
Table 8-12	Capital and Annualized Costs for Carbon Adsorber Control of Model Operations--Regulatory Alternative III.....	8-19
Table 8-13	Capital and Annualized Costs for Condensation System Control of Model Operations--Regulatory Alternative I.....	8-20
Table 8-14	Capital and Annualized Costs for Condensation System Control of Model Operations--Regulatory Alternative II.....	8-21
Table 8-15	Capital and Annualized Costs for Condensation System Control of Model Operations--Regulatory Alternative III.....	8-22
Table 8-16	Capital and Annualized Costs for Incinerator Control of Model Operations--Regulatory Alternative IV.....	8-23
Table 8-17	Average and Incremental Cost Effectiveness of Regulatory Alternatives for Storage Tanks.....	8-24
Table 8-18	Average and Incremental Cost Effectiveness of Regulatory Alternatives for Coating Mix Preparation Equipment.....	8-25
Table 8-19	Average and Incremental Cost Effectiveness of Regulatory Alternatives for Model Operations (Using Carbon Adsorber).....	8-26
Table 8-20	Average and Incremental Cost Effectiveness of Regulatory Alternatives for Model Operations (Using Condensation System).....	8-27
Table 9-1	Wholesale Value of Shipments by SIC Group, 1973-1982.....	9-3

LIST OF TABLES (continued)

		Page
Table 9-2	Polymeric Coating of Supporting Substrates: Adjusted Value of Shipments, 1982	9-5
Table 9-3	Polymeric Coating of Supporting Substrates: Wholesale Value of Shipments for Industry Segments, 1973-1982	9-6
Table 9-4	Polymeric Coating of Supporting Substrates: Percentages of Total Output by Industry Segment, 1973-1982	9-7
Table 9-5	Average Prices for Selected Products	9-9
Table 9-6	Polymeric Coating of Supporting Substrates: Industry Segment Employment, 1973-1982	9-12
Table 9-7	Plants Applying Polymeric Coatings to Supporting Substrates: Location, SIC Code, Type of Coater, and Business Size	9-13
Table 9-8	Polymeric Coating of Supporting Substrates: Concentration Ratios for Industry Segments, 1977	9-22
Table 9-9	Correlation Between Polymeric Coating Industry Output and Indexes of Motor Vehicle and Total U.S. Industrial Production	9-24
Table 9-10	Value of Imports for Polymeric Coated Products, 1978-1982	9-27
Table 9-11	Value of Exports for Polymeric Coated Products, 1978-1982	9-28
Table 9-12	Projected Annual Growth Rates for Sales of Selected Final Products Manufactured From Polymeric Coated Substrates	9-30
Table 9-13	Data Used To Derive Industry Forecast Equation	9-31
Table 9-14	Projected Value of Annual Output for the Polymeric Coating Industry, 1984-1990	9-33
Table 9-15	Percent Cost Increases for Model Plants	9-38
Table 9-16	Annual Revenue Estimates for Model Lines Producing Typical Products	9-40

LIST OF TABLES (continued)

		Page
Table 9-17	Percent Price Increases for Typical Products.....	9-41
Table 9-18	Total Value of New Solvent-Based Capacity Required, 1986-1990.....	9-44
Table 9-19	Summary of Fifth-Year Annualized Costs Under Most Costly Regulatory Alternatives.....	9-48
Table A-1	Evolution of the Background Information Document.....	A-2
Table B-1	Cross-Indexed Reference System to Highlight Environmental Impact Portions of the Document.....	B-2
Table C-1	Process Parameters Monitored During Plant B Source Testing.....	C-19
Table C-2	Process Parameters for Fluidized-Bed Carbon Adsorption System--Plant B.....	C-21
Table C-3	Valid Data--Carbon Adsorber Control Efficiency for Single Fabric Coating Line--Test Data for Plant B.....	C-22
Table C-4	Valid Data--Mix Tank Emissions Estimated From EPA Method 24 Data for Plant B.....	C-23
Table C-5	Invalid Test Data--Capture, Control, and Total VOC Reduction Efficiency for Single Fabric Coating Line at Plant B.....	C-24
Table C-6	Invalid Plant Data--Total VOC Reduction Efficiency for Single Fabric Coating Line at Plant B.....	C-27
Table C-7	Invalid Test Data--Summary of Test Results at Plant C.....	C-28
Table C-8	Valid Data--Summary of Coating Line Operations at PSTL Facility.....	C-29
Table C-9	Valid Data--Press Operations During Tests at Meredith/Burda.....	C-30
Table C-10	Valid Data--Summary of Demonstrated VOC Emission Control Efficiencies at Meredith/Burda, Percent.....	C-31

LIST OF TABLES (continued)

		Page
Table C-11	Valid Data--Summary of Capture Efficiency Data--General Tire and Rubber Company.....	C-32
Table C-12	Valid Data--Summary of Carbon Adsorption Efficiency Data--General Tire and Rubber Company.....	C-33
Table C-13	Summary of Solvent Recovery Measurement Procedures.....	C-34

1. SUMMARY

1.1 REGULATORY ALTERNATIVES

This background information document (BID) supports proposal of the new source performance standards for limiting emissions of volatile organic compounds (VOC's) from facilities performing polymeric coating of supporting substrates. The development of standards of performance for new, modified, or reconstructed stationary sources of air pollution were dictated by Section 111 of the Clean Air Act (42 USC 7411). The sources of the VOC emissions are the solvent storage tanks, coating mix preparation equipment, and coating operation. The regulatory alternatives considered are presented in Chapter 6.

Four regulatory alternatives were selected for control of VOC emissions from solvent storage tanks. Alternative I represents uncontrolled storage tanks and is equivalent to no Federal regulatory action. This alternative is considered to be the baseline condition from which the impacts of the other alternatives are calculated. The remaining alternatives would require Federal regulatory action and would place limitations on the allowable levels of VOC emissions.

Alternative II represents the estimated control level achievable by venting each storage tank to the atmosphere through conservation vents set at 17.2 kilopascals (kPa) (2.5 pounds per square inch, gauge [psig]). Alternative II is equivalent to an overall control level of approximately 70 percent of the total emissions from the solvent storage tanks. Alternative III represents the approximate level of emission reduction achievable by control of emissions using pressure relief valves set at 103 kPa (15 psig) installed on solvent storage tanks. Alternative III is equivalent to an overall control level of approximately 90 percent.

Alternative IV, representing a 95 percent control level, is achievable by venting all solvent storage tank emissions to a control device that is 95 percent efficient.

Three regulatory alternatives were selected for control of VOC emissions from coating preparation equipment. Alternative I, the baseline alternative, represents no control of emissions from these sources and is equivalent to no Federal regulatory action. Alternative II represents the estimated control level achievable by placing fastened, gasketed covers on the individual pieces of equipment in the coating mix preparation room and venting the emissions from each of these to the atmosphere through conservation vents. Alternative II represents an overall control level of 40 percent of the total emissions from these sources. The additional reduction in emissions represented by Alternative III, 95 percent overall control, is achievable by venting the emissions from the individual pieces of coating mix preparation equipment to a control device that is 95 percent efficient.

Four regulatory alternatives were selected for control of VOC emissions from the coating operation, which includes the application/flashoff area and drying oven. The first alternative would require no additional Federal regulatory action. It represents an overall VOC control level of 81 percent of the emissions from the coating operation and corresponds to the Control Techniques Guidelines (CTG) requirement of 0.35 kilogram (kg) of VOC per liter (ℓ) (2.9 pound [lb] VOC per gallon [gal]) of coating for existing polymeric coating facilities. The control level of Alternative I could be achieved by capturing all drying oven emissions and by venting all of these emissions to a control device that achieves 90 percent control efficiency.

Alternative II is based on an overall 90 percent reduction of VOC emissions. This control level can be achieved by installation of a partial enclosure around the application/flashoff area and by venting these emissions and the oven emissions through a control device that achieves 95 percent control efficiency. Alternatives III and IV are based on installation of a total enclosure around the application/flashoff area and control of these emissions and the oven emissions by 95 and 98 percent efficient control devices, respectively. This

configuration results in a 93 percent control level for Alternative III and a 96 percent control level for Alternative IV.

1.2 ENVIRONMENTAL IMPACT

The primary environmental pollutant from the polymeric coating facility is the VOC emitted from the solvent storage tanks, coating mix preparation equipment, and coating operation. Emissions of VOC can result in air pollution because they are precursors in the formation of ozone and oxygenated organic aerosols (photochemical smog).

An overview of the potential environmental impacts with respect to baseline that could result from the implementation of the regulatory alternatives is presented in Table 1-1. Detailed analyses of the environmental and energy impacts associated with each alternative are discussed in Chapter 7.

Nationwide VOC emissions from new, modified, or reconstructed polymeric coating lines (coating operations and associated coating preparation equipment and solvent storage tanks) were estimated for the years 1985 to 1990. It is projected that 26 new polymeric coating lines will be constructed by 1990. Of these lines, 18 will be subject to the control requirements. In 1990, nationwide VOC emissions from new solvent storage tanks would result in 2 megagrams (Mg) (2.2 tons) under Alternative I, while emissions under the most stringent level of control, Alternative III, would be reduced to 0.1 Mg (0.11 tons). The VOC emissions from the coating mix preparation equipment would range from 254 Mg (280 tons) under Alternative I to 13 Mg (14 tons) under Regulatory Alternative III. The VOC emissions from the coating operation would range from a high of 1,285 Mg (1,416 tons) under Alternative I to a low of 128 Mg (172 tons) under Alternative IV.

The regulatory alternatives are likely to result in negligible to moderate adverse impacts on water quality and solid waste generation. The operation of fixed-bed carbon adsorbers produces wastewater containing dissolved organics. There are no wastewater discharges from fluidized-bed carbon adsorbers, incinerators, or condensation systems. At most lines in this industry, the wastewater currently is discharged to publicly owned treatment works. Nationwide in 1990, the total quantity of

TABLE 1-1. ENVIRONMENTAL AND ECONOMIC IMPACTS OF VARIOUS REGULATORY ALTERNATIVES COMPARED TO ALTERNATIVE I (BASELINE) IN THE FIFTH YEAR (1990)

Reg. Alt.	Emission reduction		Wastewater increase		Solid waste increase		Energy increase		Cost increase[a]	
	Mg/yr	tons/yr	m^3/yr	10^5 gal/yr	kg/yr	lb/yr	TJ/yr	10^9 Btu/yr	Capital, $	Annualized, $
Storage tanks										
II	1.40	1.54	0	0	0	0	0	0	17,360	2,900
III	1.80	1.98	0	0	0	0	0	0	0	(768)
IV	1.90	2.09	0	0	0	0	0	0	238,000	47,490
Coating mix preparation equipment										
II	102	112	0	0	0	0	0.0	0.0	42,240	(34,420)
III	241	266	967	255	141	311	2.7	2.6	412,340	35,190
Coating operation										
II	964	1,062	3,628	958	850	1,874	15.4	14.6	1,394,700	332,700
III	1,060	1,168	4,515	1,193	943	2,080	12.8	12.2	2,535,400	326,160
IV	1,156	1,275	(7,715)	(2,038)	(733)	(1,615)	120.3	114.1	1,115,00	1,777,740

[a]First quarter 1984 dollars.

wastewater produced under Alternative III would be approximately 12,230 cubic meters (m^3) (3.2 million gal) for the coating operation and 967 m^3 (0.26 million gal) for the coating mix preparation equipment. The operation of fixed-bed and fluidized-bed carbon adsorbers generates some solid waste in the form of waste carbon. Alternative III for the coating mix preparation equipment would result in 141 kg (311 lb) of solid waste, assuming that 75 percent of the spent carbon is recycled. The total quantities of solid waste from the coating operation in the fifth year would range from 733 kg (1,615 lb) under Alternative I to 1,676 kg (3,695 lb) under Alternative III.

The VOC emission control equipment used at polymeric coating facilities utilizes energy in the forms of electricity, natural gas, and fuel oil. The amount of energy required increases with increasing levels of VOC control. In 1990, new polymeric coating operations would require approximately 27 terajoules (TJ) (26 billion British thermal units [Btu]) of energy under Alternative I if carbon adsorbers only are installed to recover solvent emissions. Alternative IV (incinerator) would require the largest amount of energy, 148 TJ (140 billion Btu). The energy impacts from control of the coating mix preparation equipment and the solvent storage tanks are negligible.

The noise attributable to air pollution control equipment at polymeric coating facilities results largely from motors and fans. Negligible increases in noise levels occur as a result of increasingly stricter regulatory alternatives. A matrix of the environmental and economic impacts for the regulatory alternatives is presented in Table 1-2.

1.3 ECONOMIC IMPACTS

The economic impacts of each regulatory alternative are presented in Table 1-1. Cumulative capital control costs over the first 5 years would range from zero (Alternative I) to $238,000 (Alternative IV) for control of solvent storage tanks, from zero (Alternative I) to $412,340 (Alternative III) for control of coating mix preparation equipment, and from $4,624,600 (Alternative I) to $7,160,000 (Alternative III) for control of the coating operation. Fifth-year annualized costs for emission control would range from a net credit (Alternative III) to

TABLE 1-2. MATRIX OF ENVIRONMENTAL AND ECONOMIC IMPACTS OF REGULATORY ALTERNATIVES FOR COATING OPERATIONS[a]

Regulatory action	Air impact (**)	Water impact[b] (*)	Solid waste impact[b] (*)	Energy impact[b] (***)	Noise impact (-)	Economic impact[c] (*)
Alternative I 81 percent control	+1	0	-1	0	0	+1 +2
Alternative II 90 percent control	+1				0	+1 +2
Alternative III 93 percent control	+2				0	+1 +2
Alternative IV 96 percent control	+3	0	+1	-3	0	-3
Delayed standard	-1	0	0	0	0	0

[a]The environmental and economic impacts of the control of emissions from solvent storage tanks and coating mix preparation equipment are negligible in comparison to control of emissions from the coating operation.

[b]The impacts listed are for alternatives using carbon adsorber control systems. For condensation system, the impact in all cases is zero.

[c]For alternatives where either a carbon adsorber or a condensation system can be used, the top impact number refers to carbon adsorber control, and the bottom number refers to condensation system control.

KEY

+ Beneficial impact	0--No impact
- Adverse impact	1--Negligible impact
* Short-term impact	2--Small impact
** Long-term impact	3--Moderate impact
*** Irreversible impact	4--Large impact

$47,490 (Alternative IV) for the solvent storage tanks, from a net credit (Alternative II) to $35,190 (Alternative III) for coating mix preparation equipment, and from $349,620 (Alternative I) to $1,777,740 (Alternative IV).

The economic analyses indicate that the percent price increases estimated for the typical products of model plants are generally less than one-half of 1 percent for all combinations of regulatory alternatives. The regulatory alternatives would have little or no impact on the industry's growth rate and structure. Detailed analyses of the costs and the economic impacts are presented in Chapters 8 and 9.

2. INTRODUCTION

2.1 BACKGROUND AND AUTHORITY FOR STANDARDS

Before standards of performance are proposed as a Federal regulation, air pollution control methods available to the affected industry and the associated costs of installing and maintaining the control equipment are examined in detail. Various levels of control based on different technologies and degrees of efficiency are expressed as regulatory alternatives. Each of these alternatives is studied by EPA as a prospective basis for a standard. The alternatives are investigated in terms of their impacts on the economics and well-being of the industry, the impacts on the national economy, and the impacts on the environment. This chapter summarizes the types of information obtained by EPA through these studies in the development of the proposed standards.

Standards of performance for new stationary sources are established under Section 111 of the Clean Air Act (42 U.S.C. 7411) as amended, hereafter referred to as the Act. Section 111 directs the Administrator to establish standards of performance for any category of new stationary source of air pollution which ". . . causes, or contributes significantly to, air pollution which may reasonably be anticipated to endanger public health or welfare."

The Act requires that standards of performance for stationary sources reflect ". . . the degree of emission limitation and the percentage reduction achievable through application of the best technological system of continuous emission reduction which (taking into consideration the cost of achieving such emission reduction and any nonair quality health and environmental impact and energy requirements) the Administrator determines has been adequately demonstrated." The standards apply only

to stationary sources, the construction or modification of which commences after the standards are proposed in the Federal Register.

The 1977 amendments to the Act altered or added numerous provisions that apply to the process of establishing standards of performance. Examples of the effects of the 1977 amendments are:

1. The EPA is required to review the standards of performance every 4 years and, if appropriate, revise them.

2. The EPA is authorized to promulgate a standard based on design, equipment, work practice, or operational procedures when a standard based on emission levels is not feasible.

3. The term "standards of performance" is redefined, and a new term "technological system of continuous emission reduction" is defined. The new definitions clarify that the control system must be continuous and may include a low- or non-polluting process or operation.

4. The time between the proposal and promulgation of a standard under Section 111 of the Act may be extended to 90 days.

Standards of performance, by themselves, do not guarantee protection of health or welfare because they are not designed to achieve any specific air quality levels. Rather, they are designed to reflect the degree of emission limitation achievable through application of the best adequately demonstrated technological system of continuous emission reduction, taking into consideration the cost of achieving such emission reduction and any nonair quality health and environmental impacts and energy requirements.

Congress had several reasons for including these requirements. First, standards having a degree of uniformity are needed to avoid situations where some States may attract industries by relaxing standards relative to other States. Second, stringent standards enhance the potential for long-term growth. Third, stringent standards may help achieve long-term cost savings by avoiding the need for more expensive retrofitting when pollution ceilings may be reduced in the future. Fourth, certain types of standards for coal-burning sources can adversely affect the coal market by driving up the price of low-sulfur coal or by effectively excluding certain coals from the reserve base due to their high untreated pollution potentials. Congress does not intend that new

source performance standards contribute to these problems. Fifth, the standard-setting process should create incentives for improving technology.

Promulgation of standards of performance does not prevent State or local agencies from adopting more stringent emission limitations for the same sources. States are free under Section 116 of the Act to establish even more stringent emission limits than those established under Section 111 or than those necessary to attain or maintain the National Ambient Air Quality Standards (NAAQS) under Section 110. Thus, new sources may in some cases be subject to State limitations that are more stringent than standards of performance under Section 111, and prospective owners and operators of new sources should be aware of this possibility in planning for such facilities.

A similar situation may arise when a major emitting facility is to be constructed in a geographic area that falls under the prevention of significant deterioration of air quality provisions of Part C of the Act. These provisions require, among other things, that major emitting facilities to be constructed in such areas are to be subject to best available control technology. The term "best available control technology" (BACT), as defined in the Act, means

> . . . an emission limitation based on the maximum degree of reduction of each pollutant subject to regulation under this Act emitted from or which results from any major emitting facility, which the permitting authority, on a case-by-case basis, taking into account energy, environmental, and economic impacts and other costs, determines is achievable for such facility through application of production processes and available methods, systems, and techniques, including fuel cleaning or treatment or innovative fuel combustion techniques for control of each such pollutant. In no event shall application of "best available control technology" result in emissions of any pollutants which will exceed the emissions allowed by any applicable standard established pursuant to Sections 111 or 112 of this Act. (Section 169(3))

Although standards of performance are normally structured in terms of numerical emission limits where feasible, alternative approaches are sometimes necessary. In some cases, physical measurement of emissions from a new source may be impractical or exorbitantly expensive. Section 111(h) provides that the Administrator may promulgate a design

or equipment standard in those cases where it is not feasible to prescribe or enforce a standard of performance. For example, emissions of hydrocarbons from storage vessels for petroleum liquids are greatest during tank filling. The nature of the emissions (i.e., high concentrations for short periods during filling and low concentrations for longer periods during storage) and the configuration of storage tanks make direct emission measurement impractical. Therefore, a more practical approach to standards of performance for storage vessels has been equipment specification.

In addition, under Section 111(j) the Administrator may, with the consent of the Governor of the State in which a source is to be located, grant a waiver of compliance to permit the source to use an innovative technological system or systems of continuous emission reduction. In order to grant the waiver, the Administrator must find that: (1) the proposed system has not been adequately demonstrated; (2) the proposed system will operate effectively and there is a substantial likelihood that the system will achieve greater emission reductions than the otherwise applicable standards require or at least an equivalent reduction at lower economic, energy, or nonair quality environmental cost; (3) the proposed system will not cause or contribute to an unreasonable risk to public health, welfare, or safety; and (4) the waiver when combined with other similar waivers will not exceed the number necessary to achieve conditions (2) and (3) above. A waiver may have conditions attached to ensure the source will not prevent attainment of any NAAQS. Any such condition will be treated as a performance standard. Finally, waivers have definite end dates and may be terminated earlier if the conditions are not met or if the system fails to perform as expected. In such a case, the source may be given up to 3 years to meet the standards, and a mandatory compliance schedule will be imposed.

2.2 SELECTION OF CATEGORIES OF STATIONARY SOURCES

Section 111 of the Act directs the Administrator to list categories of stationary sources. The Administrator ". . . shall include a category of sources in such list if in his judgment it causes, or contributes significantly to, air pollution which may reasonably be anticipated to

endanger public health or welfare." Proposal and promulgation of standards of performance are to follow.

Since passage of the Clean Air Amendments of 1970, considerable attention has been given to the development of an approach for assigning priorities to various source categories. The approach specifies areas of interest by considering the broad strategy of the Agency for implementing the Clean Air Act. Often, these areas are pollutants that are emitted by stationary sources rather than the stationary sources themselves. Source categories that emit these pollutants were evaluated and ranked considering such factors as: (1) the level of emission control (if any) already required by State regulations, (2) estimated levels of control that might be required from standards of performance for the source category, (3) projections of growth and replacement of existing facilities for the source category, and (4) the estimated incremental amount of air pollution that could be prevented in a preselected future year by standards of performance for the source category. Sources for which new source performance standards were promulgated or under development during 1977, or earlier, were selected using these criteria.

The Act amendments of August 1977 establish specific criteria to be used in determining priorities for all source categories not yet listed by EPA. These are: (1) the quantity of air pollutant emissions which each such category will emit or will be designed to emit, (2) the extent to which each such pollutant may reasonably be anticipated to endanger public health or welfare, and (3) the mobility and competitive nature of each such category of sources and the consequent need for nationally applicable new source standards of performance. The Administrator is to promulgate standards for these categories according to the schedule referred to earlier.

In some cases, it may not be immediately feasible to develop standards for a source category with a high priority. This might happen if a program of research is needed to develop control techniques or if techniques for sampling and measuring emissions require refinement. In the developing of standards, differences in the time required to complete the necessary investigation for different source categories must also be considered. For example, substantially more time may be necessary if

numerous pollutants must be investigated from a single source category. Further, even late in the development process, the schedule for completion of a standard may change. For example, inability to obtain emission data from well-controlled sources in time to pursue the development process in a systematic fashion may force a change in scheduling. Nevertheless, priority ranking is, and will continue to be, used to establish the order in which projects are initiated and resources assigned.

After the source category has been chosen, the types of facilities within the source category to which the standard will apply must be determined. A source category may have several facilities that cause air pollution, and emissions from these facilities may vary according to magnitude and control cost. Economic studies of the source category and of applicable control technology may show that air pollution control is better served by applying standards to the more severe pollution sources. For this reason, and because there is no adequately demonstrated system for controlling emissions from certain facilities, standards often do not apply to all facilities at a source. For the same reasons, the standards may not apply to all air pollutants emitted. Thus, although a source category may be selected to be covered by standards of performance, not all pollutants or facilities within that source category may be covered by the standards.

2.3 PROCEDURE FOR DEVELOPMENT OF STANDARDS OF PERFORMANCE

Standards of performance must: (1) realistically reflect best demonstrated control practice; (2) adequately consider the cost, the nonair quality health and environmental impacts, and the energy requirements of such control; (3) be applicable to existing sources that are modified or reconstructed as well as to new installations; and (4) meet these conditions for all variations of operating conditions being considered anywhere in the country.

The objective of a program for development of standards is to identify the best technological system of continuous emission reduction that has been adequately demonstrated. The standard-setting process involves three principal phases of activity (1) information gathering,

(2) analysis of the information, and (3) development of the standard of performance.

During the information gathering phase, industries are questioned through telephone surveys, letters of inquiry, and plant visits by EPA representatives. Information is also gathered from other sources, including a literature search. Based on the information acquired about the industry, EPA selects certain plants at which emission tests are conducted to provide reliable data that characterize the pollutant emissions from well-controlled existing facilities.

In the second phase of a project, the information about the industry and the pollutants emitted is used in analytical studies. Hypothetical "model plants" are defined to provide a common basis for analysis. The model plant definitions, national pollutant emission data, and existing State regulations governing emissions from the source category are then used in establishing "regulatory alternatives." These regulatory alternatives are essentially different levels of emission control.

The EPA conducts studies to determine the cost, economic, environmental, and energy impacts of each regulatory alternative. From several alternatives, EPA selects the single most plausible regulatory alternative as the basis for standards of performance for the source category under study.

In the third phase of a project, the selected regulatory alternative is translated into performance standards, which, in turn, are written in the form of a Federal regulation. The Federal regulation, when applied to newly constructed plants, will limit emissions to the levels indicated in the selected regulatory alternative.

As early as is practical in each standard-setting project, EPA representatives discuss the possibilities of a standard and the form it might take with members of the National Air Pollution Control Techniques Advisory Committee. Industry representatives and other interested parties also participate in these meetings.

The information acquired in the project is summarized in the background information document (BID). The BID, the proposed standard, and a preamble explaining the standard are widely circulated to the industry being considered for control, environmental groups, other government

agencies, and offices within EPA. Through this extensive review process, the points of view of expert reviewers are taken into consideration as changes are made to the documentation.

A "proposal package" is assembled and sent through the offices of EPA assistant administrators for concurrence before the proposed standard is officially endorsed by the EPA Administrator. After being approved by the EPA Administrator, the preamble and the proposed regulation are published in the Federal Register.

The public is invited to participate in the standard-setting process as part of the Federal Register announcement of the proposed regulation. The EPA invites written comments on the proposal and also holds a public hearing to discuss the proposed standard with interested parties. All public comments are summarized and incorporated into a second volume of the BID. All information reviewed and generated in studies in support of the standard of performance is available to the public in a "docket" on file in Washington, D.C. Comments from the public are evaluated, and the standard of performance may be revised in response to the comments.

The significant comments and the EPA's position on the issues raised are included in the preamble of a promulgation package, which also contains the draft of the final regulation. The regulation is then subjected to another round of review and refinement until it is approved by the EPA Administrator. After the Administrator signs the regulation, it is published as a "final rule" in the Federal Register.

2.4 CONSIDERATION OF COSTS

Section 317 of the Act requires an economic impact assessment with respect to any standard of performance established under Section 111 of the Act. The assessment is required to contain an analysis of: (1) the costs of compliance with the regulation, including the extent to which the cost of compliance varies depending on the effective date of the regulation and the development of less expensive or more efficient methods of compliance; (2) the potential inflationary and recessionary effects of the regulation; (3) the effects the regulation might have on small business with respect to competition; (4) the effects of the regulation on consumer costs; and (5) the effects of the regulation on

energy use. Section 317 requires that the economic impact assessment be as extensive as practicable.

The economic impact of a proposed standard upon an industry is usually addressed both in absolute terms and by comparison with the control costs that would be incurred as a result of compliance with typical, existing State control regulations. An incremental approach is taken because both new and existing plants would be required to comply with State regulations in the absence of a Federal standard of performance. This approach requires a detailed analysis of the economic impact of the cost differential that would exist between a proposed standard of performance and the typical State standard.

Air pollutant emissions may cause water pollution problems, and captured potential air pollutants may pose a solid waste disposal problem. The total environmental impact of an emission source must, therefore, be analyzed and the costs determined whenever possible.

A thorough study of the profitability and price-setting mechanisms of the industry is essential to the analysis so that an accurate estimate of potential adverse economic impacts can be made for proposed standards. It is also essential to know the capital requirements for pollution control systems already placed on plants so that the additional capital requirements necessitated by these Federal standards can be placed in proper perspective. Finally, it is necessary to assess the availability of capital to provide the additional control equipment needed to meet the standards of performance.

2.5 CONSIDERATION OF ENVIRONMENTAL IMPACTS

Section 102(2)(C) of the National Environmental Policy Act (NEPA) of 1969 requires Federal agencies to prepare detailed environmental impact statements on proposals for legislation and other major Federal actions significantly affecting the quality of the human environment. The objective of NEPA is to build into the decision-making process of Federal agencies a careful consideration of all environmental aspects of proposed actions.

In a number of legal challenges to standards of performance for various industries, the United States Court of Appeals for the District

of Columbia Circuit has held that environmental impact statements need not be prepared by the Agency for proposed actions under Section 111 of the Clean Air Act. Essentially, the Court of Appeals has determined that the best system of emission reduction requires the Administrator to take into account counterproductive environmental effects of proposed standards, as well as economic costs to the industry. On this basis, therefore, the Courts established a narrow exemption from NEPA for EPA determinations under Section 111.

In addition to these judicial determinations, the Energy Supply and Environmental Coordination Act (ESECA) of 1974 (PL-93-319) specifically exempted proposed actions under the Clean Air Act from NEPA requirements. According to Section 7(c)(1), "No action taken under the Clean Air Act shall be deemed a major Federal action significantly affecting the quality of the human environment within the meaning of the National Environmental Policy Act of 1969." (15 U.S.C. 793(c)(1))

Nevertheless, the Agency has concluded that the preparation of environmental impact statements could have beneficial effects on certain regulatory actions. Consequently, although not legally required to do so by Section 102(2)(C) of NEPA, EPA has adopted a policy requiring that environmental impact statements be prepared for various regulatory actions, including standards of performance developed under Section 111 of the Act. This voluntary preparation of environmental impact statements, however, in no way legally subjects the Agency to NEPA requirements.

To implement this policy, a separate section is included in this document which is devoted solely to an analysis of the potential environmental impacts associated with the proposed standards. Both adverse and beneficial impacts in such areas as air and water pollution, increased solid waste disposal, and increased energy consumption are discussed.

2.6 IMPACT ON EXISTING SOURCES

Section 111 of the Act defines a new source as ". . . any stationary source, the construction or modification of which is commenced . . ." after the proposed standards are published. An existing source is redefined as a new source if "modified" or "reconstructed" as defined in amendments to the General Provisions (40 CFR Part 60, Subpart A), which

were promulgated in the Federal Register on December 16, 1975 (40 FR 58416).

Promulgation of standards of performance requires States to establish standards of performance for existing sources in the same industry under Section 111(d) of the Act if the standard for new sources limits emissions of a designated pollutant (i.e., a pollutant for which air quality criteria have not been issued under Section 108 or which has not been listed as a hazardous pollutant under Section 112). If a State does not act, EPA must establish such standards. General procedures for control of existing sources under Section 111(d) were promulgated on November 17, 1975, as Subpart B of 40 CFR Part 60 (40 FR 53340).

2.7 REVISION OF STANDARDS OF PERFORMANCE

Congress was aware that the level of air pollution control achievable by any industry may improve with technological advances. Accordingly, Section 111 of the Act provides that the Administrator ". . . shall, at least every four years, review and, if appropriate, revise . . ." the standards. Revisions are made to ensure that the standards continue to reflect the best systems that become available in the future. Such revisions will not be retroactive but will apply to stationary sources constructed or modified after the proposal of the revised standards.

3. PROCESSES AND POLLUTANT EMISSIONS

Polymeric coating of supporting substrates is a subcategory of web coating. Web coating is defined as coating of fabric, paper, plastic film, metallic foil, metal coil, or other products that are flexible enough to be unrolled from a large roll, coated by blade, roll coating, or rotogravure as a continuous sheet and, after cure, rerolled. Several web coating categories are already subject to, or are being investigated for, regulation by new source performance standards. These are: publication rotogravure; rotogravure printing and top coating of flexible, polyvinyl chloride (PVC), and urethane surfaces; coating of magnetic tape; coating of pressure sensitive tapes and labels; and printing and application of adhesives and coatings on paper, film, and foil in converting operations.

Polymeric coating of supporting substrates is intended to include all other web coating operations excluding paper coating operations or those operations that print an image on the surface of the substrate. Any coating applied on the same printing press that applies the image would also be excluded. While polymeric coating encompasses a wide range of substrates, coatings, and products, all of the operations are similar with respect to the line configuration of unwind, coating application, flashoff area, drying or curing oven, and rewind.

This chapter describes various processes used for polymeric coating of supporting substrates and their resulting volatile organic compound (VOC) emissions. The last section of this chapter discusses the selection of the baseline emission level, which is used in later chapters to determine incremental environmental and economic impacts of the regulatory alternatives.

3.1 INDUSTRY DESCRIPTION

A more detailed generalized flow of the coating process consists of the following steps: (1) the receipt of raw materials such as substrates, solvents, polymer resins, and additives; (2) the preparation of the coating; (3) the application of the coating to the substrate; (4) the drying/curing of the coating; and (5) any subsequent processes performed on the coated substrate, such as slitting. The principle step in the manufacturing process is the application of coatings to a substrate.

There are two general categories of coated products. In the first category, the coated substrate takes on a combination of properties from both the coating and the substrate. Coatings generally impart elasticity to the substrate and also provide resistance to one or more of the following: abrasion, water, chemicals, heat, fire, and oil. Examples of coatings are natural and synthetic rubbers, urethanes, polyvinyl chloride (commonly known as PVC or vinyl), acrylics, silicone, and nitrocellulose. Substrates provide tensile strength, elongation control, and tear strength. Substrates include woven, knit, and nonwoven textiles; leather; yarn; and cord. The most prevalent substrate is woven fabric.[1] The second general category consists of those substrates that are coated with epoxy or phenolic resins. Typical substrates are fiberglass and manmade fabrics. Once coated, these products are not immediately cured but, first, are laid in a mold and then cured under pressure to form a composite structure. In both categories coated substrates are intermediate products that are used in the fabrication of a variety of major end products, some of which are listed in Table 3-1. However, these coatings and substrates do not categorize the polymeric coating industry exclusively. It is the coating process rather than the coating or substrate type that distinguishes polymeric coating from other similar industries.

There are at least 128 domestic plants owned by 108 companies that perform polymeric coating.[2] The distribution of plants by number of coating lines and by State is presented in Tables 3-2 and 3-3, respectively. Over half of the 71 plants that supplied information (Table 3-2) have 1 to 4 coating lines, and only about 7 percent of the plants have 10 or more lines. The largest number of coating lines found in a plant is 18.[3]

TABLE 3-1. MAJOR END USES OF COATED SUBSTRATES[1,2]

End use	Coating	Substrate[a]
Aerospace composite aircraft fabric structures	Silicone, epoxies, phenolics, vinyl	Fiberglass, polyester, nylon, polyaramids carbon fiber
Architectural structures	Silicone	Fiberglass
Awnings	Vinyl	Polyester, cotton, canvas
Book covers	Nitrocellulose, urethanes	Nylon, cotton, polyester
Conveyor, light duty, and industrial V-belts	Synthetic rubber, natural rubber	Polyester and cotton cord
Diaphragms and gaskets	Synthetic rubber, natural rubber	Polyester and cotton
Drapery linings	Acrylics	Polyester, polyester-cotton blend
Fencing	Synthetic rubber, natural rubber	Nylon
Flexible hoses	Synthetic rubber, natural rubber	Polyester, cotton
Hot-air balloons	Urethanes	Polyester, nylon
Inflatables	Synthetic rubber, natural rubber	Glass or polyester woven
Lightweight liners	Synthetic rubber, natural rubber	Cotton, polyester, and nylon cord and yarn
Mattress fabric	Synthetic rubber, natural rubber	Polyester drill

(continued)

TABLE 3-1. (continued)

End use	Coating	Substrate[a]
Military fabric	Silicone, epoxies, phenolics, vinyl	Fiberglass, polyaramid, polyester, nylon
Offset printing blankets	Synthetic rubber, natural rubber	Polyester, cotton and rayon blend
Pond liners	Synthetic rubber	Nylon or polyester scrim
Protective clothing	Synthetic rubber, natural rubber, urethanes	Cotton, rayon, nylon, polyester
Rainwear	Urethanes, synthetic rubber, vinyl, acrylics	Nylon, cotton
Recreational clothing and equipment	Urethanes	Nylon, polyester
Sails	Adhesives, urethanes	Nylon, polyester
Shoe fabric	Urethanes, vinyl	Cotton drill, high density nonwoven textiles
Soft-sided luggage	Urethanes, vinyl	Rayon drill, nylon, polyester
Tarpaulins	Synthetic rubber, urethane, vinyl	Nylon, polyester
Tents	Urethanes	Rayon, nylon, polyester
Truck and storage tank covers	Synthetic rubber, natural rubber, vinyl	Nylon, polyester
Upholstery	Urethanes, vinyl	Cotton, rayon, nylon, polyester

[a]Substrates are listed by material or physical form.

TABLE 3-2. DISTRIBUTION OF PLANTS THAT APPLY POLYMERIC COATINGS TO SUPPORTING SUBSTRATES BY NUMBER OF COATING LINES[2]

No. of coating lines[a]	No. of plants	Percentage of plants
1	19	27
2-4	30	42
5-10	17	24
>10	5	7
TOTAL	71	100

[a]Coating line is defined to include the coating application/flashoff area and the drying oven.

TABLE 3-3. NUMBER OF PLANTS THAT APPLY POLYMERIC COATINGS TO SUPPORTING SUBSTRATES BY STATE[2]

State	No. of plants
Alabama	1
Arkansas	2
California	7
Colorado	1
Connecticut	7
Florida	1
Georgia	6
Illinois	3
Indiana	2
Kansas	1
Maryland	1
Massachusetts	18
Michigan	2
Minnesota	1
Mississippi	1
Missouri	2
New Hampshire	2
New Jersey	9
New York	10
North Carolina	6
Ohio	13
Pennsylvania	2
Rhode Island	7
South Carolina	8
Tennessee	5
Texas	3
Vermont	1
Virginia	3
Wisconsin	3
TOTAL	128

This source category is not restricted to any one region of the country by raw material or market requirements, but most plants are located in the more heavily populated and industrialized areas.

Polymeric coating plants may be classified into two broad categories, commission and captive (or noncommission) coaters. The commission coater has many customers and produces coated substrates according to each customer's specifications. The captive coater produces coated substrate as an intermediate product in a manufacturing process.[4-6]

3.2 RAW MATERIALS

The raw materials used to produce polymeric coatings include plasticizers, solvents, polymer resins, pigments, curing agents, and fillers such as carbon black or Teflon®. Plasticizers are added to the coating to increase its pliability. Frequently used plasticizers include fatty acids, alcohols, and dialkyl phthalates.

Solvents are added to the coating to disperse the solids and to adjust the viscosity of the coating. Factors affecting solvent selection are dispersability, toxicity, availability, cost, desired rate of evaporation, ease of use after solvent recovery, and effect on solvent recovery equipment. Table 3-4 presents the solvent and solids content of the various polymeric coatings.[7] The major organic solvents used in the coatings are toluene, dimethyl formamide (DMF), acetone, methyl ethyl ketone (MEK), isopropyl alcohol, xylene, and ethyl acetate. Toluene is one of the lowest cost organic solvents and therefore is the most commonly used.

The trend over the past 15 years is to use less solvent because of the increasing cost, environmental regulations, and awareness of the hazards of emissions both to workers and to the environment.[8] More than 30 percent of the plants identified in this source category currently use low-solvent coatings such as waterborne or higher solids.[2] Waterborne coatings may be defined as containing more than 5 percent water (by weight) in the liquid fraction.[9] Higher solids coating is a term often applied to any coating which contains considerably higher solids than conventional coatings used in the past.[10] Plastisol coatings and rubber

TABLE 3-4. SOLVENT AND SOLIDS CONTENT OF POLYMERIC COATINGS[7]

Polymer type	Typical percentage, by weight	
	% solvent	% solids
Rubber	50-70	30-50
Urethanes	50-60	40-50
Acrylics[a]	50	50
Vinyl[b]	60-80	20-40
Vinyl Plastisol	5	95
Organisol	15	85
Epoxies	30-40	60-70
Silicone	50-60	40-50
Nitrocellulose	70	30

[a]Organic solvents are generally not used in the formulation of acrylic coatings. Therefore, the solvent content for acrylic coatings represents nonorganic solvent use (i.e., water).
[b]Solvent borne vinyl coating.

coatings used in calendering and extrusion processes are 95 to 100 percent solids.[11-15]

3.3 PROCESSES AND THEIR EMISSIONS

The process of applying a polymeric coating to a supporting substrate consists of: mixing the coating ingredients (including the solvents), conditioning the substrate, applying the coating to the substrate, and evaporating the solvent in a drying oven. Sometimes, subsequent curing or vulcanizing is necessary. The steps in this process are typical of any polymeric coating plant applying liquid coatings. Figure 3-1 presents a schematic of a solvent borne polymeric coating operation. The emissions of concern are VOC's that result primarily from the vaporization of solvents during coating and drying of the substrate and, in lesser amounts, during solvent storage, coating preparation, and cleaning of the equipment. Small amounts of VOC emissions also may occur as by-products of reactions that take place when coatings are mixed or as the coatings are cured.

3.3.1 Solvent Storage

Each polymeric coating plant may have up to five solvent storage tanks. Generally, the capacity of the tanks ranges from 19 cubic meters (m) (5,000 gallons [gal]) to 38 m^3 (10,000 gal). However, tanks as small as 3.8 m^3 (1,000 gal) and as large as 76 m^3 (20,000 gal) in capacity are used. The tanks are built with open vents or with conservation vents. The majority of plants have solvent storage tanks that are located below ground.[6,16] However, industry contacts have indicated that solvent storage tanks at new plants would be built above ground because of concerns about potential ground water contamination.[17]

3.3.2 Preparation of Coating

For the purposes of this document, coating mix preparation equipment includes all the mills, mixers, mixing and holding tanks, and pumps required to produce a polymeric coating (either in dry or liquid form) that is ready to be applied to the substrate. The number of steps involved in preparing the coating depends on the form (chunks, blocks, chips, pellets, or fine powder) in which the polymer is received and fed to the process.

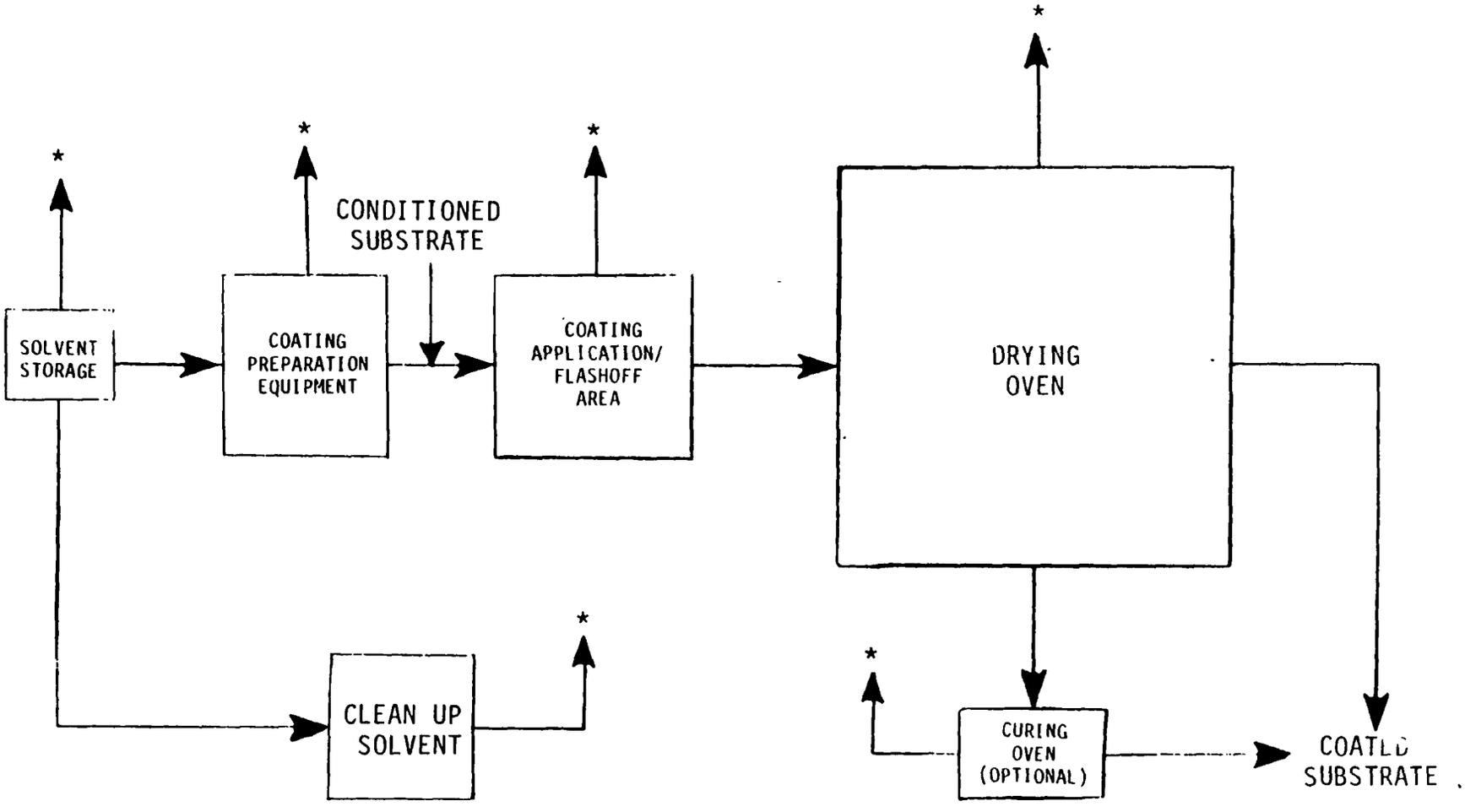

VOC emissions are denoted by an '*'.

Figure 3-1. Solvent borne polymeric coating operation and VOC emission locations.

The polymers that are supplied in large chunks or blocks require the most elaborate coating preparation procedure. This procedure for preparing coating is typical of rubber coatings. The polymer, along with pigments, fillers, and sometimes oils, is fed to a Banbury mixer that blends the mixture by a set of rotors. The mixture is discharged as a semi-molten slab, which is cooled and then is usually sent to a two-roll mill in which curing agents and other additives are blended. At some plants, the polymer is fed directly to the roll mill if the chunks are small enough. The roll mill is a set of two rollers that squeezes layers of polymer together. Mixing occurs as strips of polymer are peeled off and refed to the rolls. From the two-roll mill, the polymer is either sent to a calendering or an extrusion process, both of which use solventless coatings, or to a shredder that cuts the polymer into small rectangular cubes or pellets. The cubes or pellets are fed to a mixing vessel, sometimes called a churn or kettle, to be dissolved or suspended in solvents or plasticizers.

Some manufacturers supply the polymer in chip or pellet form that precludes the Banbury mixing and roll milling steps. Additives and solvents are added directly to the polymer into a mixing vessel. The homogeneity of a coating solution is critical; therefore, the coating is filtered through a series of wire screens prior to application.

Another procedure for preparing coatings is typical of PVC plastisols. The polymer is a fine powder, which is suspended in plasticizers with emulsifying agents. Occasionally a small amount (5 percent or less) of organic solvent is added for viscosity control.[11] A typical coating preparation equipment configuration for plastisol coatings is a mixer, vacuum pump, vacuum hood, and filter.[18]

Urethane coatings are generally purchased premixed and require little or no mixing at the plant site. Acrylic and vinyl coatings are also sometimes purchased premixed.[19] Therefore, few, if any, pieces of coating preparation equipment are required for these operations.

3.3.3 Substrate Preparation

Prior to the application of the coating, substrates are typically cut into production size rolls and inspected for any defects. If there are any major defects, the substrate is discarded. Minor defects are

cut out of the substrate.[20] Substrates may also be washed and shrunk or stretched.[21] Sometimes, to reduce the moisture content, the substrate is passed through a series of steam-heated rollers just prior to coating.[22]

Fabric widths used in coating operations range from 48 to 72 inches. Although use of the 72-inch width is increasing, the 60-inch width is currently most commonly used. Wider fabrics maximize production rates, which result in a less expensive intermediate product.[4-5,23]

3.3.4 Coating Application

The three primary types of equipment used for applying liquid coating (including plastisols) to the substrate are: knife-over-roll, dip, and reverse-roll coaters. Figure 3-2 presents typical configurations for these coaters. This equipment is applicable for organic solvent borne and waterborne coatings.[6]

Knife-over-roll is the most common type of coating application method.[24] The coating is either pumped or manually poured onto the substrate just in front of a knife that is perpendicular to the substrate. The coating thickness depends on the clearance between the edge of the knife and the substrate. The equipment can apply a variety of coatings at a wide range of coating thicknesses from 50 μm (2 mils) up to 2,500 μm (100 mils).[25]

Dip coating is another common coating application method used when saturation of the substrate is desired.[6] All cord- and yarn-coating lines and some rubber- and epoxy-coating lines employ dip coaters.[25] The substrate passes from a roller (or series of spools) through a coating reservoir (called a dip tank or dip vat) and emerges through a pair of rollers or wiper blades that removes excess coating. The amount of coating remaining on the substrate is controlled by the pressure of the rollers or wiper blades on the substrate.

The third coating application method is the reverse-roll coater. This method is used when thin coating layers must be applied with a high degree of precision.[4,5,26] There are many configurations of reverse-roll coaters. In a three-roll reverse-roll coater, the substrate is drawn around the bottom of the three rolls while coating is applied to the top roll. Coating thickness is controlled by the gap between rolls and the

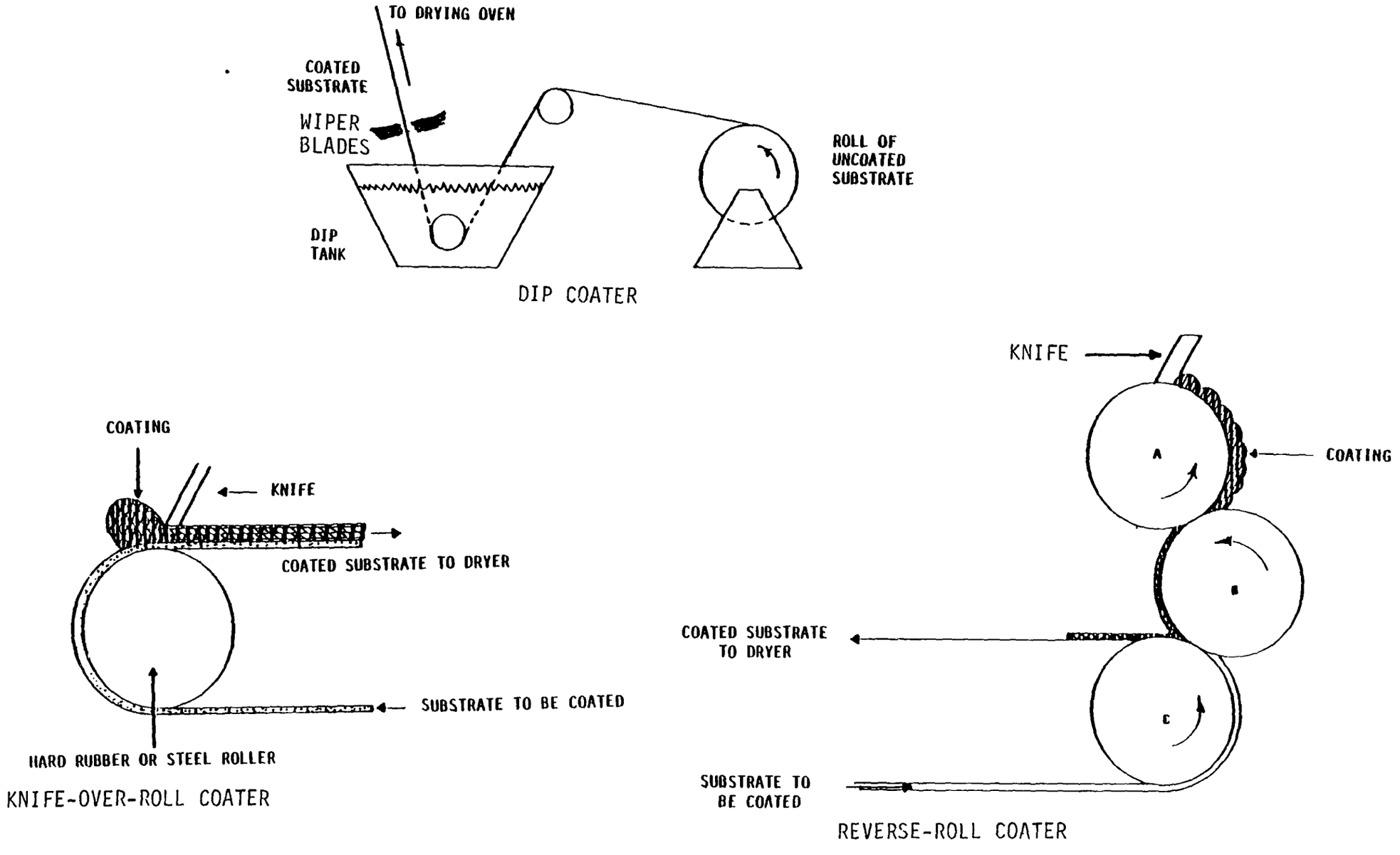

Figure 3-2. Three typical coating application equipment configurations.

line speed.[27] The reverse-roll coating method is commonly used by urethane coaters. According to one industry contact, rubber coatings typically are not applied by this method because the coating tends to dry on the rollers.[28]

While the three liquid coating application methods vary in the physical setup, the overall coating line configuration of unwind, coating application, flashoff area, drying oven, and rewind is similar for all three. Their main function of applying coatings to the substrate is the same. Similar VOC fugitive emission capture devices around the coating application/flashoff area and similar control devices to control the VOC emissions could be applied to coating lines using any of the coating application methods.

Table 3-5 presents the coating type, line speed, and dry coating thickness of the coating applicators used to apply liquid coatings. Line speeds of 5 to 32 meters (5 to 35 yards) per minute are typical for all types of applicators; however, 46 meters (50 yards) per minute can be achieved with some coating compounds.[5,23] Although three different coaters are used to apply a wide variety of liquid coatings, there is not a wide variation in coating line speeds, amount of coating applied, or dry coating thickness as can be seen by Table 3-5.

The types of coating processes that apply 95 to 100 percent solid coatings include calendering, extrusion, and lamination. Calendering is a process in which the coating is formed into a self-supporting sheet by squeezing it between successive pairs of heated rolls, each pair rotating faster than the previous pair. The sheet is subsequently pressed against the supporting substrate to form the coated product. Extrusion is the process of forcing a heated thermoplastic resin through a slit or die to form a sheet. In the coating process, the sheet, while still in a semi-molten state, is pressed into the substrate. Lamination is a process of using heat, adhesives, and pressure to bond a substrate and plastic film.

The line utilization rate is the amount of time the coating equipment is in operation during a working day and is directly related to the length of substrate rolls, the time required to change rolls, any downtime due to process upsets, and product changes. The line utilization rate

TABLE 3-5. COATING APPLICATOR PARAMETERS[2]

Coater	Coating type	Line speed, meters/min (yards/min)	Dry coating thickness, μm (mils)
Knife-over-roll	Rubber (natural & synthetic) Urethane Vinyl Silicone Acrylic	6.1-23 (6.7-25)	75-500 (3-20)
Dip	Rubber (natural & synthetic) Epoxy Phenolic Silicone Vinyl	1.5-40 (1.7-43)	25-2,000 (1-80)
Reverse roll	Urethane	13.7-64 (15-70)	25-1,250 (1-50)

for captive coating lines tends to range between 80 and 90 percent of a given shift.[4,5] Commission coaters generally have more product changes to implement, and the time required to implement product changes may result in lower utilization rates. Commission coaters may only use their coating equipment 45 to 50 percent of a given shift.[3-5]

3.3.5 Drying

Liquid coatings must be solidified by evaporating the solvent, or in the case of plastisols, causing the plasticizers to diffuse into the PVC resin. This is accomplished by passing the coated substrate through a drying oven. The typical distance between the coating application point and the oven entrance varies from about 15 cm (6 in) for knife coaters up to 1 m (3.3 ft) for dip or roll coaters. Drying ovens may be vertical or horizontal and range from 4 to 8 feet in width and 20 to 100 feet in height or length.[6] They may be steam heated or direct fired but usually involve some kind of forced air convection system utilizing impingement nozzles. The air turbulence dries the coating surface and prevents dead spots in the oven where the temperature or solvent vapor concentration might build up to a dangerous level.

Most ovens are single zoned; however, the temperature usually increases between the oven entrance and exit. Multizoned ovens are used where discretely different temperatures or residence times at particular temperatures are necessary for drying and in-line curing. Multizoned ovens are also used when more than one coating application station exists in the coating line.

A key design and operating parameter is the percentage of the lower explosive limit (LEL) of the solvents that must be maintained inside the oven for safe operation. Insurance companies require that solvent borne coating lines maintain the solvent concentration in the oven at 25 percent or less of the LEL if the solvent concentration in the drying oven is not continuously monitored.[29] Historically, most polymeric coaters have operated their ovens at less than 25 percent of the LEL and at relatively high airflow rates ranging from 3,000 to 15,000 scfm.[4,30] The high airflows allowed for future increases in production or higher solvent load to the oven. Recently, advances in oven design and monitoring instrumentation, spurred by rapidly rising fuel cost, have enabled

manufacturers to increase solvent concentrations up to 50 percent of the LEL while allowing for varying solvent loads.[29]

Some rubber coated substrates require subsequent curing or vulcanizing. One procedure is to drape the coated substrate on tiers in a festoon oven that is heated up to 140°C (280°F) for 1 to 12 hours. Another procedure is to wind the coated substrate within a special nonadhering paper and cure as a roll in a large autoclave.[31]

Some polymeric coaters that apply higher solids coatings are using ultraviolet or electron beam curing.[32] In ultraviolet curing, ultraviolet light reacts with photosensitizers in the coating to initiate crosslinking to form a solid. The electron beam process uses high energy electrons to effect the cure of the coating. For both curing methods, there is a substantial decrease in energy usage compared with thermal curing.[33]

3.3.6 VOC Emissions

3.3.6.1 Sources of Emissions and Factors Affecting Emissions. The VOC emissions from polymeric coating of supporting substrates are primarily solvents and trace amounts of plasticizers and reaction by-products (cure-volatiles). Solvents are used in coatings and during cleanup of the coater and ancillary equipment. The VOC emissions are released from several points in the coating operation, and these sources are identified in Figure 3-1.

The VOC emissions from outdoor solvent storage tanks occur as working losses during filling and breathing losses due to diurnal temperature changes. The rate of these emissions depends on the tank size, solvent vapor pressure, solvent throughput, magnitude of temperature changes, and presence of conservation vents or relief valves.

In the coating preparation area, VOC's are emitted from the individual mixers and holding tanks during: (a) the filling of mixers, (b) transfer of the coating, (c) intermittent activities such as changing the filters in the holding tanks, and (d) mixing if the equipment is not equipped with tightly fitting covers. The emissions may be intermittent or continuous, depending on whether the method of coating preparation is batch or continuous.

Emissions from the coating application area result from the evaporative loss of solvent around the coating application area during transfer and application of coating and from the exposed substrate as it travels from the coater to the drying oven entrance (flashoff). The magnitude of these losses is a function of the amount of solvent in the coating as well as line width and speed, coating thickness, volatility of the solvent(s), temperature, distance between coater and oven, and air turbulence in the coating area.

In the drying oven, the rate of evaporation of solvent is affected by the temperature, airflow rate and direction, and the line speed. The airflow rate is always adjusted to keep the VOC concentration below the LEL. All but a very small fraction of the solvent from the coating evaporates in the oven, and there are virtually no solvent emissions from subsequent production steps. Some plasticizers and reaction by-products may be emitted if the coating is subsequently cured or vulcanized. These emissions are usually negligible compared to the total emissions from the operation.[34]

Information obtained in the development of new source performance standards for the manufacturing of magnetic tapes was utilized to determine the apportionment of emissions between the coating preparation equipment and the coating line.[35] Because both polymeric coating and magnetic tape manufacturing are web coating processes using similar types of solvents, it has been assumed that the ratio of emissions from the coating preparation equipment and the coating line is the same for both types of coating processes. In the magnetic tape manufacturing process, it was estimated that of the total emissions, approximately 10 percent are emitted from the coating mix preparation equipment and 90 percent from the coating operation. This ratio of emissions from these two areas has been assumed to be applicable for facilities performing polymeric coating of substrates. This estimate was confirmed by a coating mix preparation equipment vendor.[36] This number is generally accepted as a rule-of-thumb among the polymeric coaters surveyed in this investigation.

Information on 18 facilities shows that the amount of solvent used for cleaning of coating equipment in 1979 varied from 0 to 14 percent of

the total solvent used at the plants; the average was 3.5 percent.[37] Much of this solvent stays in the liquid phase and can be reused or is stored or disposed in accordance with solid waste and water quality regulations.

3.3.6.2 Emission Estimates. Potential uncontrolled emissions from polymeric coating operations were estimated from data on the total amount of solvent used by polymeric coating plants. Information on solvent usage was obtained from 32 plants using solvent borne coatings. These data were reduced to determine the average solvent usage per coating line per shift. This number was scaled to estimate the annual solvent usage for an individual plant and on a nationwide basis for this source category. The estimated average uncontrolled VOC emissions from a polymeric coating line using solvent borne coatings and operating 2 shifts per day would be 155 Mg (170 tons) per year. Potential uncontrolled VOC emissions from coating lines are estimated to range from 0 to 3,000 Mg (0 to 3,300 tons) per plant. Potential nationwide uncontrolled VOC emissions were estimated to range from 29,000 to 35,000 Mg (32,000 to 39,000 tons).[37]

3.4 BASELINE EMISSION LEVEL

The baseline emission level represents the level of control that is required under existing State and local regulations. The baseline is used to evaluate the impacts of the regulatory alternatives to be selected for analysis.

3.4.1 Existing Emission Limits

Table 3-6 summarizes the State and local regulations for VOC emissions applicable to plants with facilities that apply polymeric coatings to supporting substrates. Of the 30 States that have plants with polymeric coating facilities, 22 States (with 112 facilities) limit VOC emissions to 0.35 kilogram per liter (kg/ℓ) (2.9 lb/gal) of coating applied, excluding water. This emission limit is recommended by the control techniques guideline (CTG) document.[38] Three of the 30 States having polymeric coating plants have no VOC emission limits that apply to this source category. The remaining five States require intermediate levels of VOC control.

TABLE 3-6. STATE REGULATIONS FOR VOC EMISSIONS FROM POLYMERIC COATING SOURCES[39]

State	No. of plants per State	Regulation[a]	Air pollution regulation reference (Environment Reporter)
Alabama	1	1	Ch. 6.1.1.6 and Ch. 6.1.1.7. March 23, 1982.
Alaska	--	b	November 1, 1982.
Arizona	--	b	February 2, 1982.
Arkansas	2	2,3,4	Sec. 5.5. September 26, 1980.
California[c]	7	--	
Colorado	1	1	November 11, 1982. Reg. 7 IX.
Connecticut	7	1	Sec. 19-508-20(O) and Sec. 19-508-20(Q). January 2, 1975.
Deleware	--	1	Regulation XXIV, Section 9. October 8, 1982.
District of Columbia	--	d	Sec. 8-2:707(F). February 26, 1981.
Florida	1	1	17-2.650(1). December 30, 1982.
Georgia	7	1	391-3-1-0.02(w) and 391-3-1-0.02(x). August 27, 1982.
Hawaii	--	b	May 13, 1976.
Idaho	--	b	October 1, 1979.
Illinois	3	e	Rule 205(f).
Indiana	2	1	Article 8, Rule 2, November 8, 1982.
Iowa[f]	--	--	November 17, 1982.
Kansas	1	b	May 1, 1982.
Kentucky	1	5	401 KAR 59:210, 401 KAR 61:120, 401 KAR 59:214 and 401 KAR 61:124. January 14, 1983.
Louisiana	--	1	Sec. 22.9.2. January 27, 1983.
Maine	--	b	December 22, 1982.
Maryland	1	1	Sec. 10.18.21.07. December 27, 1982.
Massachusetts	19	1	Sec. 7.18(14), Sec. 7.18(15), Sec. 7.18(16), and Sec. 7.18(17). December 31, 1982.
Michigan	2	1	Part 6, Table 63 and R 336.1620. December 31, 1982.
Minnesota	1	b	November 8, 1982.
Mississippi	1	b	December 8, 1982.
Missouri	2	1	Ch. 2 and Ch. 5. November 11, 1982.
Montana	--	b	June 1, 1981.
Nebraska	--	b	August 6, 1982.
Nevada	--	b	July 1981.
New Hampshire	3	1	Part 1204.05 and Part 1204.06. July 20, 1982.
New Jersey	7	1	7:27-16.5. March 1, 1982.
New Mexico	--	b	November 24, 1980.
New York	10	1	Parts 228.3, 228.7, and 228.8. May 10, 1981.
North Carolina	6	1	Regulation 0.0920, 0.0921, and 0.0935. December 1, 1982.
North Dakota	--	b	July 1, 1982.
Ohio	13	1	3745-21-09(F), (G), (H). December 3, 1982.
Oklahoma	--	g	Regulation 3.7.3(A)(1). April 9, 1982.

(continued)

TABLE 3-6. (continued)

State	No. of plants per State	Regulation[a]	Air pollution regulation reference (Environment Reporter)
Oregon	--	2,3,4	340-22-170. January 22, 1982.
Pennsylvania	2	2,3,4	Sec. 129.52. January 7, 1983.
Rhode Island	7	1	APC Regulation 19. April 5, 1982.
South Carolina	8	1	Standard No. 5, Sec. II(C), and (G). December 16, 1982.
South Dakota	--	b	March 18, 1982.
Tennessee	5	1	Ch. 1200-3-18-0.06, 0.14 and 0.20. February 1, 1982.
Texas	3	1	Regulation V. February 16, 1982.
Utah	--	1	Part IV. July 29, 1982.
Vermont	1	1	Subch. 1, 5-253. November 3, 1981.
Virginia	3	1	Rule Ex-5, 4.55. March 1, 1983.
Washington	--	2,3,4	Ch. 173-490 and WAC 173-490-207. December 31, 1981.
West Virginia	--	b	April 8, 1982.
Wisconsin	3	1	NR 154.13(E), (F), and (K). December 1, 1982.
Wyoming	--	b	August 26, 1981.

[a]Following regulations are applicable for fabric coating facilities:
Regulation 1: 0.35 kg/ℓ (2.9 lb/gal) of coating, minus water, delivered to coating applicator.
Regulation 2: 0.52 kg/ℓ (4.3 lb/gal) of coating, minus water, delivered to a coating applicator that applies a clear coating.
Regulation 3: 0.42 kg/ℓ (3.5 lb/gal) of coating, minus water, delivered to a coating applicator that utilizes air or forced air dryers and that applies extreme performance coatings.
Regulation 4: 0.36 kg/ℓ (3.0 lb/gal) of coating, minus water, delivered to a coating applicator for all other coatings.
Regulation 5: No more than 15 percent by weight of VOC's net input into an affected facility.
[b]National ambient air quality standards only.
[c]Pending.
[d]No discharge to atmosphere of more than 15 lb of photochemically reactive solvents in one day or 3 lb in 1 hour unless uncontrolled organic emissions are reduced by 85 percent. No discharge to atmosphere of more than 40 lb of nonphotochemically reactive solvents in 1 day or 8 lb in 1 hour unless uncontrolled organic emissions are reduced by 85 percent.
[e]No discharge to atmosphere of >8 lb per hour of organic material from any emission source, except if controlled: (1) By flame, thermal, or catalytic incineration to reduce emissions to ≤10 ppm equivalent methane or convert 85 percent of hydrocarbons to CO_2 and H_2O). (2) By vapor recovery to control 85 percent of total uncontrolled organic material, (3) By any other air pollution control equipment capable of 85 percent reduction of uncontrolled organic material.
[f]Emissions from painting and surface coating operations--0.01 grain of particulate per standard cubic foot of exhaust gas.
[g](a) No discharge to atmosphere from any coating line or operation using: Alkyd Primer, 4.8 lb/gal; vinyls, 6.0 lb/gal; NL lacquers, 6.4 lb/gal; Acrylics, 6.0 lb/gal; Epoxies 4.8 lb/gal; maintenance finishes, 4.8 lb/gal; custom product finishes; 6.5 lb/gal; (b) An owner or operator may develop a plant-wide emission plan instead of for each coating line; (c) No discharge of more than 3,000 lb of organics in one day or more than 450 lb in 1 hour; (d) 90 percent reduction by incineration; (e) 85 percent reduction by adsorption or any process of equivalent reliability and effectiveness.

Twenty States do not have existing polymeric coating plants. Of these States, three have applicable VOC emission limits of 0.35 kg/ℓ (2.9 lb/gal) of coating applied, excluding water. Two of these three have exemptions for sources using or emitting less than a specified amount of coating or VOC's. Thirteen of the 20 States that do not have existing polymeric coating plants have no VOC emission limits that apply to this source category. The remaining four States require intermediate levels of VOC control.

3.4.2 Determination of Baseline Emission Levels

The baseline emission level for the coating operation is considered to be an allowable VOC emission limit of 0.35 kg/ℓ (2.9 lb/gal) of coating for a typical formulation. This is the average of the State regulations when each emission limit was weighted by the number of existing polymeric coating plants in that State.[39]

To comply with the State regulations, polymeric coating plants may either install an abatement device, use low-VOC-content coatings, or both. Typically, when a control device is used, only emissions from the drying oven are controlled. Some emissions from the application/flashoff area may be entrained by the oven draft and, thus, will be controlled. Emissions from the coating preparation equipment and solvent storage tanks are not ducted to the control device. Therefore, the baseline emission levels for solvent storage tanks and coating preparation equipment are considered to be the uncontrolled emission levels. For coating operations (application/flashoff area and drying oven), the baseline emission level is considered to be the level attained by controlling drying oven emissions.

3.5 REFERENCES FOR CHAPTER 3

1. Kirk-Othmer Encyclopedia of Chemical Technology. Volume 6. John Wiley and Sons. Third Edition. 1978. pp. 377-386.

2. Memorandum from Thorneloe, S., MRI, to Polymeric Coating of Supporting Substrates Project File. July 9, 1984. Information summarizing the name and locations of each plant, type of coating used, number of coating lines, major end products, and whether or not the plant is a commission coater.

3. Reference 2, p. 9.

4. Letter from Hindle, M., The Kenyon Piece Dyeworks, Inc., to Crumpler, D., EPA:CPB. March 23, 1984. Information provided about 1983 monthly solvent recovery efficiency data and factors affecting commission coaters.

5. Telecon. Maurer, E., MRI, with Swain, R., Lembo Corporation. March 7, 1984. Information on coating equipment design and operation.

6. Telecon. Maurer, E., MRI, with Leach, A., Indev Machinery Division. March 7, 1984. Information on coating equipment design and operation.

7. Memorandum from Thorneloe, S., MRI, to Polymeric Coating of Supporting Substrates Project File. October 26, 1984. Summary of information on polymeric coatings used in the coating of supporting substrates.

8. Telecon. Thorneloe, S., MRI, with Walsh, W., Research and Graduate Studies, North Carolina State University. March 12, 1984. Information regarding trends in solvent usage in polymeric coating operations.

9. U. S. Environmental Protection Agency. Glossary for Air Pollution Control of Industrial Coating Operations. Second Edition. EPA-450/3-83-013R. December 1983. p. 23.

10. Reference 9, p. 9.

11. Reference 9, p. 22.

12. Telecon. Maurer, E., MRI, with Hartenstein, R., Custom Coated Products, Division of Hartco. November 29, 1983. Information regarding the conversion by this plant to 100 percent solid PVC coatings.

13. Telecon. Maurer, E., MRI, with Mr. Venkataraman, Seaman Corp., Shelterite Division. January 3, 1984. Information on a solventless "hot melt" (calendering) process.

14. Telecon. Maurer, E., MRI, with Schoen, W., Armstrong Cork Company. December 19, 1983. Information on a solventless rubber coating operation.

15. Telecon. Maurer, E., MRI, with Gilbert, R., and D. Phillips, Reef Industries, Inc. January 19, 1984. Information on an extrusion operation.

16. Memorandum from Thorneloe, S., MRI, to Polymeric Coating of Supporting Substrates Project File. October 22, 1984. Summary of nonconfidential information regarding solvent storage tanks at polymeric coating plants.

17. Telecon. Friedman, E., MRI, with Coffey, F., Southern Tank and Pump Company. August 23, 1984. Information on solvent storage tanks.

18. Telecon. Friedman, E., MRI, with Mueller, J., Day Mixing Company. June 5, 1984. Information regarding plastisol coatings.

19. Telecon. Maxwell, C., MRI, with Raffi, C., Raffi and Swanson, Inc. July 15, 1983. Information regarding retail customized coatings.

20. Memorandum from Newton, D., MRI, to Crumpler, D., EPA:CPB. July 22, 1983. p. 3. Report on site visit to Aldan Rubber Company, Philadelphia, Pennsylvania.

21. Memorandum from Maxwell, C., MRI, to Crumpler, D., EPA:CPB. June 24, 1983. p. 2. Report on site visit to Reeves Brothers, Inc., Buena Vista, Virginia.

22. Memorandum from Thorneloe, S., MRI, to Crumpler, D., EPA:CPB. March 2, 1984. p. 6. Report of site visit to Utex Industries, Inc., Weimer, Texas.

23. Holden, V., Manufacturing Methods Give Coated and Laminated Fabrics Their Character. Industrial Fabric Products Review. September 1983. pp. 60-62.

24. Grant, R. Coating: Science, Engineering, or Art? Journal of Coated Fabrics. 11:80. October 1981.

25. Grant, R. Coating and Laminating Industrial Fabrics. Journal of Coated Fabrics. 12:196-212. April 1983.

26. Grant, R. Coating and Laminating Applied to New Product Development. Journal of Coated Fabrics. 10:232-253. January 1981.

27. U. S. Environmental Protection Agency. Control of Volatile Organic Emissions From Existing Stationary Sources--Volume II: Surface Coating of Cans, Coils, Paper, Fabrics, Automobiles, and Light-Duty Trucks. EPA-450/2-77-008. May 1977.

28. Telecon. Maurer, E., MRI, with Salos, E., Archer Rubber Company. March 15, 1984. Information on rubber-coating operations.

29. Reference 23, p. 79.

30. Memorandum from Thorneloe, S., MRI, to Polymeric Coating of Supporting Substrates Project File. May 9, 1984. Process parameters for plants using control devices while applying polymeric coatings to supporting substrates.

31. Reference 20, p. 6.

32. Kardashian, R. Electron Processing for the 1980's. Journal of Coated Fabrics. 11:131-136. January 1983.

33. Reference 26, pp. 90-93.

34. U. S. Environmental Protection Agency. Flexible Vinyl Coating and Printing Operations--Background Information for Proposed Standards. EPA-450/3-81-016a. January 1983. pp. 3-12 - 3-13.

35. Memorandum from Beall, C., MRI, to Project File. June 22, 1984. Distribution of emissions between coating mix preparation and the coating line.

36. Telecon. Friedman, E., MRI, with Mueller, J., Day Mixing Company. June 5, 1984. Information on coating preparation equipment.

37. Memo from Maurer, E., MRI, to Elastomeric Coating of Fabric Project File. April 12, 1984. Estimated solvent consumption at facilities performing elastomeric coating of fabrics.

38. U. S. Environmental Protection Agency. Control of Volatile Organic Emissions From Existing Stationary Sources--Volume I: Control methods for Surface-Coating Operations. EPA-450/2-76-028. November 1976.

39. Memorandum from Maurer, E., MRI, to Polymeric Coating of Supporting Substrates Project File. April 19, 1984. Baseline emissions level.

4. EMISSION CONTROL TECHNIQUES

4.1 INTRODUCTION

The VOC emissions from polymeric coating of supporting substrates result primarily from evaporative losses of solvent from solvent storage tanks, coating mix preparation equipment, the application/flashoff area, and the drying oven. A small amount of solvent may be retained in the final product. As stated in Chapter 3, some of the VOC's emitted may be reaction by-products rather than evaporative losses. However, the control techniques for these emissions are no different from those used to control evaporative emissions. There are two approaches to controlling emissions from polymeric coating operations. One is by the use of an emission capture system and control device collectively referred to as a control system. The other is by use of low-solvent coatings.

This chapter describes the technology available for capture and control of emissions from all of the sources mentioned above and the expected levels of control achievable. The use of low-solvent coatings is also discussed.

4.2 VOC EMISSION CAPTURE SYSTEMS

A capture system combines one or more capture devices to collect VOC emissions and deliver them to a control device. Capture efficiency is defined as the fraction of all organic vapors generated by a process that are directed to a control device. For the purposes of this discussion, the capture of emissions is divided into two major categories: (1) capture from solvent storage tanks, coating mix preparation equipment, and drying oven; and (2) capture from the coating application/flashoff area.

The first category is composed of equipment that is inherently capable of good capture. The second category is more dependent on the

design parameters of the capture device or system and even the operation of the plant production process. Each category will be discussed in detail below.

4.2.1 Emission Capture Systems for Solvent Storage Tanks, Coating Mix Preparation Equipment, and Drying Ovens

Emissions from storage tanks can be captured by two methods. One method is to use a pressure relief valve to prevent vapors from escaping the tank during filling and diurnal breathing. The other method would be to vent vapors through ductwork to a control device. While no polymeric coating plant has been identified that is employing these technologies, both are common in the organic chemicals and magnetic tape manufacturing industries.

The VOC emissions from coating mix preparation equipment may be captured by tightly covering and venting the coating mix preparation equipment (i.e., mixers and holding tanks) to a control device, usually with a minimum airflow rate. The solvent laden air discharged from the coating preparation equipment can be used as part of the oven make-up air, or it can be vented directly to the control device.

At least eight polymeric coating plants use covered coating mix preparation equipment. Three plants duct coating mix preparation equipment emissions to a control device.[1,2] At one plant, all coating mix preparation equipment is covered. When the covers are opened, dampers in the ductwork also are opened, and the draft created by the control device blower is sufficient to pull in all emissions. The emissions are vented to a carbon adsorber.

Local ventilation, partial enclosures, and total enclosures (discussed in the next section) might also be used to capture emissions from coating mix preparation equipment, but these methods would appear to be no more (and probably less) effective than sealed covers. These other devices or systems would require more air to be evacuated from the mixing area; consequently, the control equipment that serves them would also have to be larger and more expensive than if sealed covers were used.

Proper design, operation, and maintenance virtually guarantees a high capture efficiency of drying ovens. Well-designed and -operated ovens are maintained at slightly negative pressure to prevent leakage and reduce

loss of oven gases containing VOC emissions through substrate inlet and outlet openings. Large pressure differentials are avoided to prevent unnecessary dilution of oven exhaust. The solvent laden air in the oven exhaust is drawn into the oven ductwork and may be recirculated in the oven before it is directed to a control device. This recirculation allows faster air velocities and, therefore, better drying conditions and more efficient use of energy needed to heat the air.

4.2.2 Emission Capture Systems for the Application/Flashoff Area

The coating application/flashoff area requires more complex systems to capture VOC emissions. The types of capture systems employed at polymeric coating plants and at plants in other web coating industries include local ventilation, partial enclosures, and total enclosures.

Current practice in this industry is to vent all or part of the emissions from the application/flashoff area directly to the atmosphere rather than to a control device primarily because State and local regulations may not require the capture and control of VOC emissions from these sources. In cases where the plant does not have a control device, ventilation systems are used to maintain a safe working environment. It would be technically feasible to duct emissions to a control device rather than to the atmosphere.

4.2.2.1 Local Ventilation Systems. Local ventilation systems are the capture systems most widely used at polymeric coating plants. They usually consist of one or more hoods such as floor sweeps, slotted ducts, and even certain kinds of partial enclosures. Capture efficiencies of these ventilation systems vary widely with respect to air pollution control.

An efficient local ventilation capture system should maximize the collection of VOC emissions, minimize the collection of dilution air, and maintain an adequate ventilation rate in the work place. The factors important in designing an efficient capture system include:

1. Degree of turbulence;
2. Capture velocity; and
3. Selectivity of collection.

Although these factors are interdependent, each will be discussed separately.

Turbulence in the air around a VOC emission source is a serious impediment to effective collection. Turbulence dilutes the solvent laden air stream and contributes to the transport of VOC's away from the capture device. The increased amount of dilution air increases the size and resultant cost of control equipment. Sources of turbulence that should be recognized and minimized include:

1. Thermal air currents;
2. Machinery motion;
3. Material motion;
4. Operator movements;
5. Room air currents; and
6. Spot cooling and heating of equipment.

Turbulence around hoods and exhaust vents should also be minimized. The coefficient of entry (C_e) is a measure of the degree of turbulence caused by the shape of the opening. A perfect hood with no turbulence losses would have a coefficient of entry equal to 1. Table 4-1 gives coefficients of entry for selected hood openings. Flanged or bell-mouthed hood openings reduce the pressure drop at the entrance which reduces turbulence, and, thereby, improves capture.

The velocity necessary to collect contaminated air and draw it into a capture device is called the capture velocity. At capture velocity, the inflow of air to the capture device is sufficient to overcome the effects of turbulence and, thereby, minimize the escape of contaminated air. Local ventilation systems require higher capture velocities than total or partial enclosures and result in larger quantities of air being ducted to the control device. Empirical testing of operating systems has been used to develop the guidelines for capture velocity presented in Table 4-2.[3]

Selectivity describes the ability of the capture system to collect pollutants at their highest concentration by minimizing the inflow of clean air. A highly selective system will achieve a high capture efficiency using low airflow rates. Low airflow rates and the increased VOC concentration in the air stream result in control systems that are relatively economical to operate.

TABLE 4-1. COEFFICIENTS OF ENTRY FOR SELECTED HOOD OPENINGS[3]

Hood type	Description	C_e
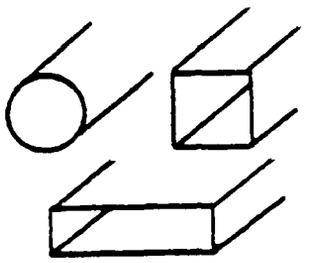	Plain opening	0.72
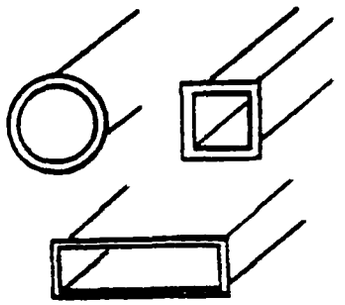	Flanged opening	0.82
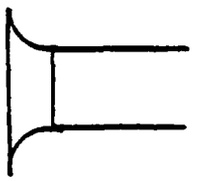	Bell mount inlet	0.98

TABLE 4-2. RANGE OF CAPTURE VELOCITIES[3]

Condition of dispersion of contaminant	Capture velocity, m/s (fpm)
Released with little velocity into quiet air	0.25-0.51 (50-100)
Released at low velocity into moderately still air	0.51-1.02 (100-200)
Active generation into zone of rapid air motion	1.02-2.54 (200-500)
Released at high initial velocity into zone of very rapid air motion	2.54-10.2 (500-2,000)

The best method of improving selectivity is to minimize the distance between the emission source and the capture device. Selectivity also can be enhanced by the use of flanges or bell-shaped openings on hoods and exhaust points. These features cause the airflow to be pulled more directly from the source of emissions. Less dilution air is pulled from behind and the sides of the hood.

At polymeric coating plants, air intake ducts are located as close to the emission source as 0.15 meter (m) (0.5 foot [ft]). There are some plants, however, in which overhead hoods are suspended 0.3 to 1.5 m (1 to 5 ft) above the emission source, and floor sweeps are placed underneath the source. Some plants rely on air intake created by the drying oven to provide the local ventilation for the coating application/flashoff area (and sometimes the entire coating room).[1]

4.2.2.2 Partial Enclosures. A partial enclosure is any rigid or semirigid structure that partially surrounds or encloses a source. It is open on at least one side to provide unobstructed access to the coating application/flashoff area. An example would be a tunnel that is attached to the oven and extends beyond the application/flashoff area but is open on that end. Another example is demonstrated at a polymeric coating plant where a 10-foot-high curtain of silicone-coated fiberglass surrounds the dip tank. Because the top of the enclosure is bounded by the base of a vertical drying tower (vertical oven), the flashoff area is within the enclosure. Canopy hoods are positioned above the dip tank, and solvent laden air drawn into the hoods is exhausted to the atmosphere. However, the remaining VOC emissions contained by the enclosure are drawn into the drying tower and from there to the control device.[7] At a plant in a similar web coating industry, flexible vinyl strips are hung around the coating application/flashoff area to form a curtain.

The objective for partially enclosing the application/flashoff area is to eliminate cross-drafts and turbulence that impede the effectiveness of local hoods and floor sweeps. As with local ventilation systems, there is a wide range in capture efficiencies of the partial enclosures. In general, partial enclosures achieve equal or better capture efficiencies at lower airflow rates than local ventilation systems alone.

The emissions may be vented through the drying oven and then to the control device or directly to the control device.[6]

4.2.2.3 Total Enclosures. The most effective emission capture system is a total enclosure that surrounds the emission source. The only openings are those that allow air into the enclosure to prevent a buildup of organic vapors to hazardous exposure or explosive concentrations. A negative-pressure differential is maintained with the outside of the enclosure to ensure that no air can escape through the limited openings.

A ventilation system can be designed so that the room containing the source(s) of emissions functions as a total enclosure. By closing all doors and windows, the room may be evacuated either by the draft from the oven(s) or by hoods and exhaust ducts. The room ventilation exhaust can be directed to the control device, it can be used as make-up air to the oven which is served by a control device, or it can be split between the two routes. One polymeric coating plant is known to use room ventilation to capture emissions from the application/flashoff area. At this plant, the coating operation is contained in a room that is kept at negative pressure. There is an indraft of about 0.25 to 0.51 meters per second (m/s) (50 to 100 feet per minute [fpm]) at the room openings. The capture of emissions from the coating application/flashoff area is augmented by the use of floor sweeps with inlet velocities of 1.52 m/s (300 fpm), which are located along the coating operation. Ventilation ducts are located directly under the flashoff area to capture emissions. The captured emissions are vented to the oven to serve as make-up air and then to a control device.[8]

A total enclosure also may be designed as a small room surrounding the emission source or as a "glove box" shaped to conform roughly to the shape of the equipment. This design may preclude total emission capture at all times, however, because of turbulence or back drafts caused by the opening of enclosure doors during operation. If the pressure differential inside and outside the enclosure is adequate, fugitive losses would be minimal.

The VOC emissions that are contained by the enclosure are ducted to the oven to serve as make-up air or directly to the control device. When the captured emissions are used as oven make-up air, the total

airflow to the control device is lower than that for systems that duct air from the application/flashoff area to the control device through independent ductwork. In some cases, the draft from the oven opening at the substrate entrance is sufficient to draw the captured emissions into the oven without the use of additional hoods and ducts.[9] Using ventilation air as oven make-up air increases the VOC concentration in the solvent laden air that is ducted to the control device; thus, the potential size of the control device required to treat the solvent laden air may be smaller. One polymeric coating plant uses a total enclosure designed as a small room that captures emissions from the coating application/flashoff area.[9]

The efficient operation of a small room or "glove box" total enclosure depends upon the enclosure doors being closed. The most common substrate, fabric, is relatively nonhomogeneous (compared to paper or film), and polymeric coating plant personnel claim that the coating process may require the constant attention of an operator. Insecure seams and fabric imperfections may result in tension tears. The lack of uniform substrate thickness may require continuous tension adjustments. For these reasons, it may be necessary for workers to have immediate access to the enclosed area in the event of a web break or other problem. Estimates of the number of times during a shift that a worker would need access to the coating application/flashoff area ranged from 8 to 150. A representative of one plant stated that an operator would have to be stationed at the application/flashoff area for the duration of each production run.[10]

A room ventilation type of total enclosure could be used to allow frequent or continuous worker access, and fresh air could be supplied directly to operators stationed within the enclosure. Although such a system was not observed in use at a polymeric coating plant, it would reduce the airflow rate to the control device in comparison to typical room ventilation systems that do not have a fresh air supply and would provide for worker safety. Fresh air supply systems are currently used at plants in at least two spray coating industries and could be adapted to polymeric coating plants.

Although not specifically demonstrated in this industry, a total enclosure could be equipped with local hoods and evacuated at a rate that maintains a safe concentration for the worker without requiring a fresh air supply system. The amount of air necessary to achieve this condition would be a function of the proximity of the hood to the source of emissions. A few potentially effective hood designs and locations have been observed in this and similar industries. Two general designs are illustrated in Figure 4-1.

4.3 VOC EMISSION CONTROL SYSTEMS

The emission control devices used by polymeric coating plants are listed in Table 4-3.[11] The technologies used to control VOC emissions are carbon adsorption, condensation, and incineration. The theory, design characteristics, and principles of operation of these control devices are discussed in the following sections with emphasis on factors affecting their application in polymeric coating plants. Emissions from the coating line are commonly controlled using these devices. Three plants control emissions from the coating mix preparation equipment by ducting them to a carbon adsorber used to control coating operation emissions.[2] It would also be possible to duct emissions from a solvent storage tank to one of these control devices, although no tanks at polymeric coating plants are known to be controlled by this method at the present time.

4.3.1 Carbon Adsorption

Carbon adsorption has been used for the last 50 years by many industries to recover a wide variety of solvents from solvent laden air streams.[12] Carbon adsorbers reduce VOC emissions by adsorption of organic compounds onto the surface of activated carbon. The high surface-to-volume ratio of activated carbon and its preferential affinity for organics make it an effective adsorbent of VOC's.[13] The organic compounds are subsequently desorbed from the activated carbon and recovered. The two types of carbon adsorbers are fixed-bed and fluidized-bed.

4.3.1.1 Fixed-Bed Carbon Adsorbers. For most of the 50 years that carbon has been used as a commercial adsorbant, it has been available

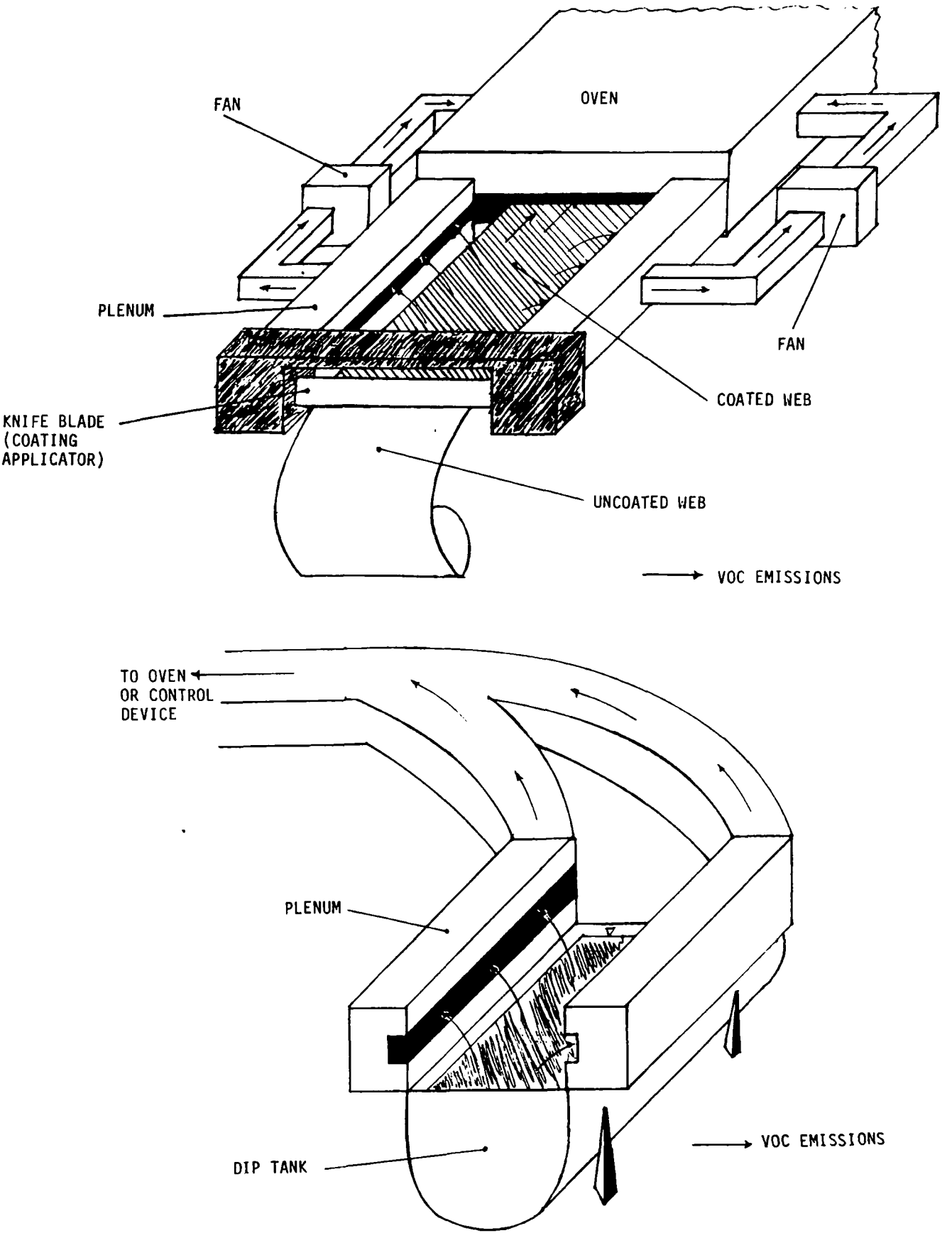

Figure 4-1. Application/flashoff area hood designs.

TABLE 4-3. VOC EMISSION CONTROL DEVICES USED BY POLYMERIC COATING PLANTS[11]

Control device	No. of control devices	Percentage of plants
Carbon adsorber		
Fixed-bed	9	
Fluidized-bed	1	
	10	25
Condensation system		
Inert atmosphere	2	
Air atmosphere	1	
	3	8
Incinerator		
Catalytic	9	
Thermal	16	
Type not specified	1	
	26	67
Total	39	100

only in a fixed-bed process. The typical depth of the carbon bed is 20 to 25 centimeters (cm) (8 to 10 inches [in.]), and the bed is supported within a vertical or horizontal cylindrical metal vessel. The solvent laden air is fed into the bed, and the organics are adsorbed as the air passes through the bed. Most fixed-bed adsorbers have multiple beds in separate cylinders to allow simultaneous adsorption and desorption and, thus, continuous operation. Figure 4-2 is a schematic of a two-unit fixed-bed adsorber.[14] When the VOC concentration in the air discharged from a bed starts to increase, or at a preset time interval, the inlet solvent laden air is routed to a different carbon bed, and the nearly saturated bed is regenerated. Regeneration is usually accomplished using low pressure steam. The steam heats the bed to desorb the solvents and acts as a nonflammable carrier gas. Typical steam requirements range from 4 to 9 kilograms (kg) of steam per kg of recovered solvent (4 to 9 pounds [lb] of steam per lb of recovered solvent).[12,15] After regeneration, the carbon bed is dried and cooled to improve the ability of the carbon to adsorb organic compounds. The mixture of steam and organic vapors exhausts from the adsorber and is condensed in a heat exchanger; the condensate is routed to a decanter (see Figure 4-1) or to a holding tank if the condensate is water-miscible. In the decanter, the solvent floats on the solvent-insoluble water layer. Both water and organics are drawn off to separate storage or further treatment. Distillation is necessary in the case of a water-miscible condensate.

The interdependent parameters considered in the design of a fixed-bed carbon adsorption system are:

1. Type of solvent(s);
2. Drying oven exhaust outlet temperature;
3. Control device solvent laden air inlet temperature;
4. Solvent laden air inlet concentration;
5. Solvent laden air inlet flow rate;
6. Type and amount of carbon;
7. Superficial bed velocity;
8. Bed pressure drop;
9. Cycle time;

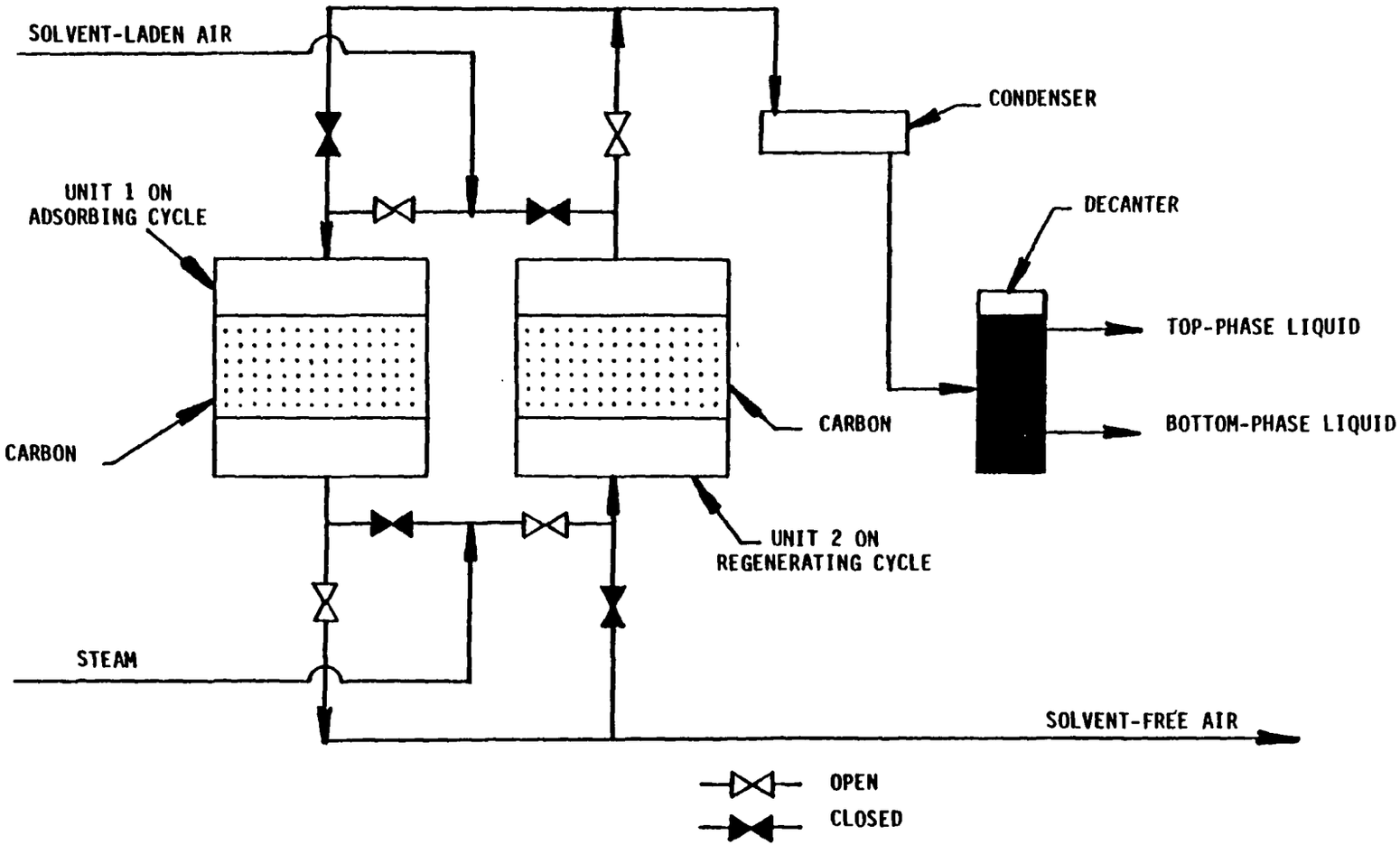

Figure 4-2. Flow diagram of a two-unit, fixed-bed abdsorber.[14]

10. Degree of regeneration of the carbon bed; and

11. Pressure and temperature of steam.

The first five parameters are characteristics of the production process. The next three are design parameters for the adsorber. The remaining parameters are operating variables that may affect the performance of the adsorber. Table 4-4 presents process parameters representative of polymeric coating plants controlled by carbon adsorbers.[11]

Major problems encountered in the operation of fixed-bed carbon adsorbers in polymeric coating plants are: fouling of beds, corrosion, and excessive heat buildup or bed fires. Carbon beds can be fouled by dust or other particulate matter, high boiling compounds, high molecular weight compounds, and compounds that polymerize or oxidize on the carbon particles.[12] Fouled carbon cannot be regenerated at normal steam temperature and pressure. Fouling reduces adsorption efficiency and requires early replacement of the carbon. Spent carbon is sent back to the supplier for reactivation. The customer usually receives a credit for it against new carbon. Filtration equipment may prevent fouling if there is dust or other particulate matter in the drying oven exhaust.

Corrosion can be a problem in fixed-bed carbon adsorbers used to recover solvents that are converted to acidic compounds in the wet steam. The carbon acts as a catalyst in some of these reactions. This problem can be overcome by the use of corrosion resistant materials such as stainless steel, more frequent carbon regeneration to remove the degrading organics, or by switching to a less corrosive solvent.

Heat buildup is perhaps the most common problem of carbon bed operation. Adsorption is an exothermic phenomenon; typical heat generation is 465 to 700 kilojoules (kJ) per kg (200 to 300 British thermal units [Btu] per lb) of solvent adsorbed. At high solvent concentrations, more heat of sorption may be generated than can be dissipated by the carrier gas. In this situation, the overheated carbon bed results in poor adsorption and possibly bed fires.[16] The addition or replacement of carbon to the bed also increases the tendency for the bed to overheat due to the increase in adsorptive sites per unit of new carbon.[17]

Ketones are frequently associated with carbon bed fires. In addition to a high heat of sorption, ketones react in the presence of low

TABLE 4-4. PROCESS PARAMETERS FOR POLYMERIC COATING PLANTS CONTROLLED BY FIXED-BED CARBON ADSORBERS[11]

Parameters	Typical range
Solvent laden air	
Flow rate	1.4 to 3.3 m^3/s (3,000 to 7,000 scfm)
Inlet concentration	<20% LEL
Inlet temperature	35° ± 6°C (95° ± 10°F)
Oven temperature	93° ± 28°C (200° ± 50°F)

[a] m^3/s = cubic meters per second at standard conditions.
[b] scfm = standard cubic feet per minute where standard conditions are 20°C (68°F) and 101.3 kPa (29.92 in. Hg).

concentrations of water to form acids and acid anhydrides. This exothermic reaction is catalyzed by the carbon. These properties of ketones can lead to excessive heat buildup or bed fires.

Excessive heat buildup can be avoided by cooling the bed between regeneration and adsorption cycles adequately and by maintaining the inlet gas temperature at or below 38°C (100°F) and the organic concentration at or below 25 percent of the LEL. A recommended practice for operations using ketones is to keep the relative humidity at 40 percent or higher, which creates competition between water and the organic vapor for adsorptive sites.[16] The energy required to evaporate the water helps to dissipate the heat of sorption from the organic. Some carbon beds may contain cooling coils to remove heat continually from the carrier gas.

Many polymeric coating plants use a single solvent in coatings, and the recovered solvent requires only decantation. A further treatment step, distillation, is required when multiple solvents or water-miscible solvents are used. Typical distillation systems consist of a decanter and one or more distillation columns. Caustic drying systems are used for the removal of small amounts of residual water from the solvent. The complexity and the recovery efficiency of the separation equipment will vary with the amount of water and number of solvents in the recovered condensate and the desired purity of the recovered solvent. One plant that is using multiple solvents sends the recovered solvent to a solvent broker who uses the solvent as a diluent.[18] A plant that uses large amounts of solvent might find it economical to separate and purify the solvents in-house.

Volatile organic compound removal efficiencies of 95 to 97 percent are achievable with modern designs of fixed-bed adsorbers.[19,20] There are nine fixed-bed carbon adsorbers in operation at polymeric coating plants. Most of these units were built during the last 5 to 7 years.[11] One of these units has been tested by the EPA and is described below to illustrate the emission control efficiency achieved and the applicability of carbon adsorption to polymeric coating plants.

Plant A installed a carbon adsorber in 1977 to control toluene emissions from three coating lines. The solvent recovery system at

Plant A consists of three carbon beds and a decanter for solvent separation. The design flow rate for the carbon adsorption unit is 4.7 cubic meters per second (m^3/s) (9,900 actual cubic feet per minute [acfm]) with an inlet concentration of about 2,000 parts per million by volume (ppmv). The average operating cycle of the carbon adsorber is 3.6 hours. Outlet solvent concentrations ranged from 6 to 390 ppmv, depending on the degree of saturation of the carbon bed. When the performance test was conducted, average VOC removal efficiency was found to be in excess of 97 percent for 5-year-old carbon.[19]

4.3.1.2 Fluidized-Bed Carbon Adsorbers. In fluidized-bed systems, adsorption and desorption both are carried out continuously in the same vessel. Figure 4-3 presents a flow diagram of a fluidized-bed carbon adsorber.[21] The system consists of a multistage, countercurrent, fluidized-bed adsorption section; a pressure-sealing section; and a desorption section. Nitrogen gas is used as a carrier to remove the solvent vapors from the desorption section. The pressure-sealing section prevents air from entering the mixture of solvent and nitrogen vapors. The regenerated carbon is carried by air from the bottom to the top of the column via an external duct.

The solvent laden air is introduced into the bottom of the adsorption section of the column and passes upward countercurrent to the flow of carbon particles. Adsorption occurs on each tray as the carbon is fluidized by the solvent laden air. The carbon flows down the column by a system of overflow weirs. Below the last tray, the carbon falls to the desorption section where indirect heating desorbs the organic compounds from the carbon; hot nitrogen gas passes through the bed countercurrent to the flow of carbon flow and removes organic compounds. The desorption temperature is normally around 121°C (250°F) but can be raised to 260°C (500°F) to remove buildup of high-boiling materials. The desorption section is maintained continuously at the temperature required to volatilize the adsorbed compounds.[22] The solvent and nitrogen mixture is directed to a condenser where the solvent can be recovered for reuse. The nitrogen is sent through the "secondary adsorber" (top layer of carbon in the desorption section), which removes residual solvent from the nitrogen, and is then recycled.

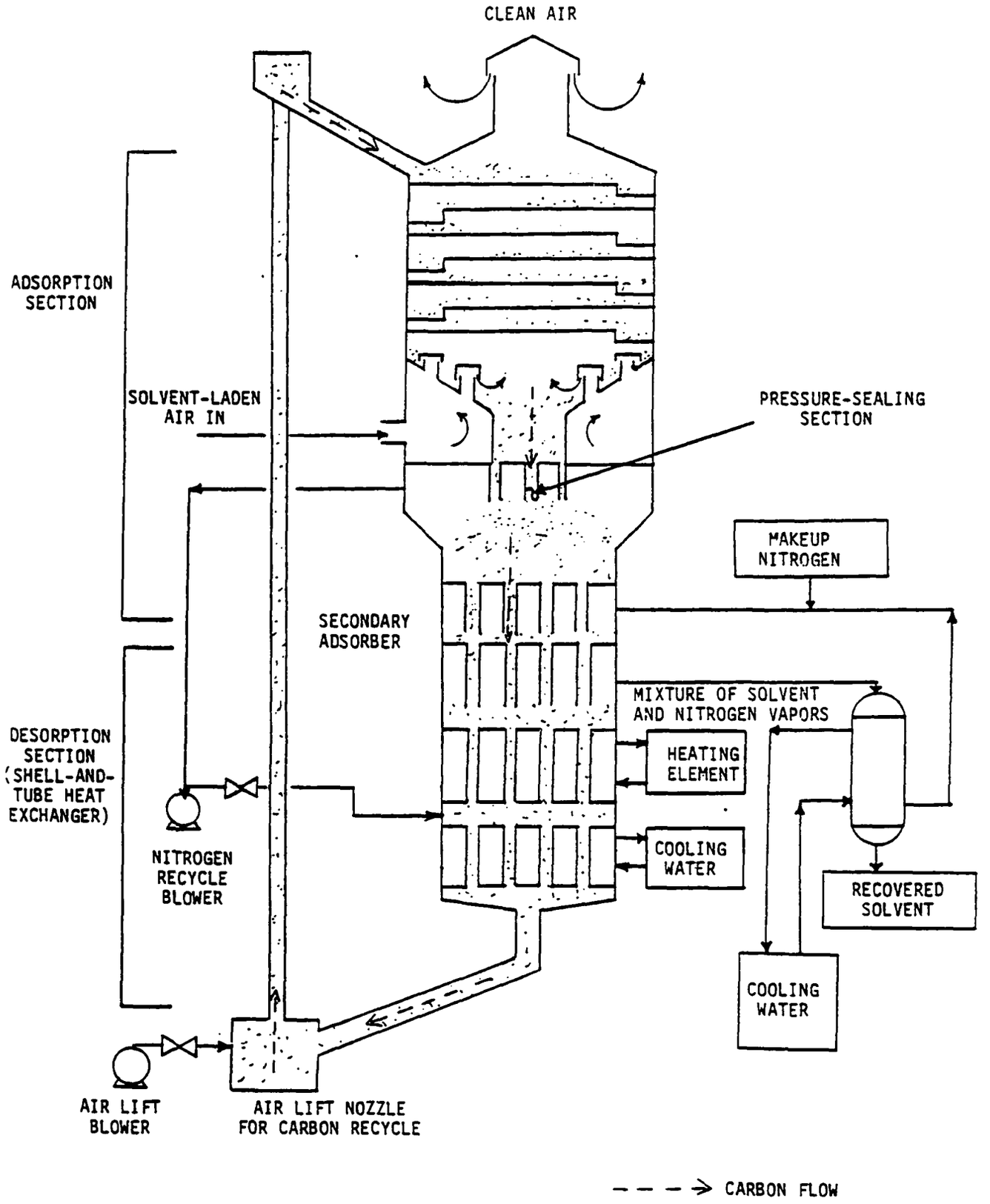

Figure 4-3. Fluidized-bed carbon adsorber.[21]

The microspherical particles of carbon used in a fluidized-bed are formed by spray-drying molten petroleum pitch. The carbon particles are easily fluidized and have strong attrition resistance.[27] The adsorptive properties of the carbon particles are similar to those of other activated carbons.[21]

The interdependent parameters considered in design of a fluidized-bed carbon adsorber are:

1. Type of solvent(s);
2. Drying oven exhaust outlet temperature;
3. Control device solvent laden air inlet temperature;
4. Solvent laden air inlet concentration;
5. Solvent laden airflow rate;
6. Superficial bed velocity;
7. Bed pressure drop;
8. Rate of carbon flow; and
9. Degree of regeneration of the carbon (bed).

The first five parameters are characteristics of the production process. The next two parameters are characteristics of the design of the adsorber. The eighth parameter, rate of carbon flow, is set by the operator to achieve desired control efficiency. The remaining parameter is an operating variable that may affect the performance of the adsorber.

Just as with the gas entering the fixed-bed, the dryer exhaust gas (solvent laden air) must be cooled before it reaches the fluidized-bed adsorber in order to optimize the carbon's absorptivity. The pressure drop per stage normally ranges from 1 to 2 kilopascals (kPa) (4 to 8 in. water column [in. w.c.]), with six to eight stages required, depending on the application. The pressure drop across the entire bed is 6 to 16 kPa (24 to 64 in. w.c.). The gas velocity through the adsorption section may be as high as 1 m/s (200 fpm), which is two to four times that in fixed-bed adsorbers.[22]

The primary problem that may occur with the operation of fluidized-bed adsorbers is fouling of the carbon. The same factors that affect fouling of carbon in fixed-bed adsorbers also affect the carbon used in fluidized-bed adsorbers. Corrosion is generally not a problem in fluidized-bed adsorbers because stripping is accomplished by nitrogen rather than by

steam and the water content of the recovered solvent is low (typically 5 percent or less by weight). The only water present in the recovered solvent is that which was absorbed from the solvent laden air. Thus, generally, the carbon adsorber need not be constructed of expensive corrosion-resistant materials. Bed fires are also not a problem in fluidized-bed adsorbers because the relatively high superficial velocities eliminate the possibility of hot spot formation.

One polymeric coating plant is currently using a fluidized-bed carbon adsorber. This unit is described below to illustrate the application to polymeric coating plants.[9]

Plant B installed a fluidized-bed carbon adsorber in August 1983 to replace a fixed-bed carbon adsorber that was subject to frequent carbon bed fires. The plant uses MEK exclusively. Table 4-5 lists process parameters for the fluidized-bed carbon adsorber at Plant B.[9] This unit was tested by EPA and was found to achieve 99 percent solvent recovery efficiency.[23]

The fluidized-bed carbon adsorber is sized for an inlet airflow of 5.66 m^3/s (12,000 acfm). Influent VOC levels to the control device range from 1,000 to 2,600 ppmv, and effluent levels range from 5 to 60 ppmv (averaging 15 to 20 ppmv).

The fluidized-bed carbon adsorber has been said to control emissions of water soluble solvents because steam is not the regenerating fluid. However, according to an EPA study, the recovered solvent still may contain enough water (10-12 percent) to require further treatment.[24,25] This has been the case at Plant B where humidity has proven to be a problem. The carbon captures a substantial amount of water, which contains about 27 percent MEK after condensation. This water/MEK solution is distilled to recover the solvent.

4.3.2 Condensation

Condensation is a method of recovering VOC emissions by cooling the solvent laden air to the dew point of the solvent (or solvent mixture) and collecting the solvent droplets. The temperature reduction necessary to condense the solvent vapor depends on the vapor pressure and concentrations of the solvents in the gas stream.[26] Two types of commercially available condensation systems have been used to recover VOC emissions

TABLE 4-5. PROCESS PARAMETERS OF PLANT F FLUIDIZED-BED CARBON ADSORBER SYSTEM[9]

Solvent laden air	
Inlet temperature, °C (°F)	57 to 66 (135 to 150)
Relative humidity, %, range	30 to 100
average	65 to 75
Inlet concentration, ppmv, design	2,600
actual	1,000 to 2,600
Outlet concentration, ppmv, range	5 to 60
average	15 to 20
Total carbon charge, kg (lb)	4,040 (8,900)
No. of trays	8
Carbon flow rate, kg/h (lb/h)	750 to 1,280 (1,650 to 2,815)
Pressure drop per tray	0.5 in. w.c.
Regeneration temperature, °C (°F)	222 to 223 (431 to 434)
N_2 flow rate, m^3/s (acfm)	0.10 to 0.12 (220 to 260)

from drying ovens at polymeric coating plants. These systems differ in the design and operation of the drying oven (i.e., use of inert gas or air in the oven) and in the method of cooling the solvent laden air (i.e., liquified inert gas or refrigeration).

4.3.2.1 Condensation System Using Inert Gas (Nitrogen) Atmosphere. Figure 4-4 presents a flow diagram of a condensation system using a nitrogen-blanketed drying oven and a nitrogen-cooled heat exchanger.[27] The inerting curtains shown in Figure 4-4 are streams of solvent-free nitrogen gas that prevent both airflow into the oven and VOC flow from the oven. Fume collection hoods also may be located near the ovens and curtains to capture any gases escaping these areas.

Nitrogen is used in the drying oven to permit operation with high solvent vapor concentrations without the danger of explosion. The nitrogen recycled through the oven is monitored and operated to maintain solvent vapor concentrations of 10 to 30 percent, by volume.[27] The use of high solvent vapor concentrations and minimum gas flow rates allows economical solvent recovery.

Solvents are recovered by sending a bleed stream of approximately 1 percent of the recycle flow through a shell-and-tube condenser.[28] The liquid nitrogen is on the tube side, and the solvent-laden nitrogen passes over the outside of the tube surfaces. Vapors condense and drain into a collection tank.[29] The nitrogen that vaporizes in the heat exchanger is recycled to the oven and inerting curtains. To avoid solvent condensation in the oven and to maintain the product cure rate and the recycle and virgin nitrogen feed rates, the temperature in the oven must be maintained so that the solvent vapor concentration is above the dew point.

The nitrogen-blanketed system is water-free; hence, the cost of a distillation system may be avoided, especially if the coating uses a single solvent.[30] Also, corrosion is not a problem. Therefore, special materials of construction are not required when using a nitrogen condensation system even when recovering ketones.

The interdependent parameters considered in the operation and design of an inert condensation system are:

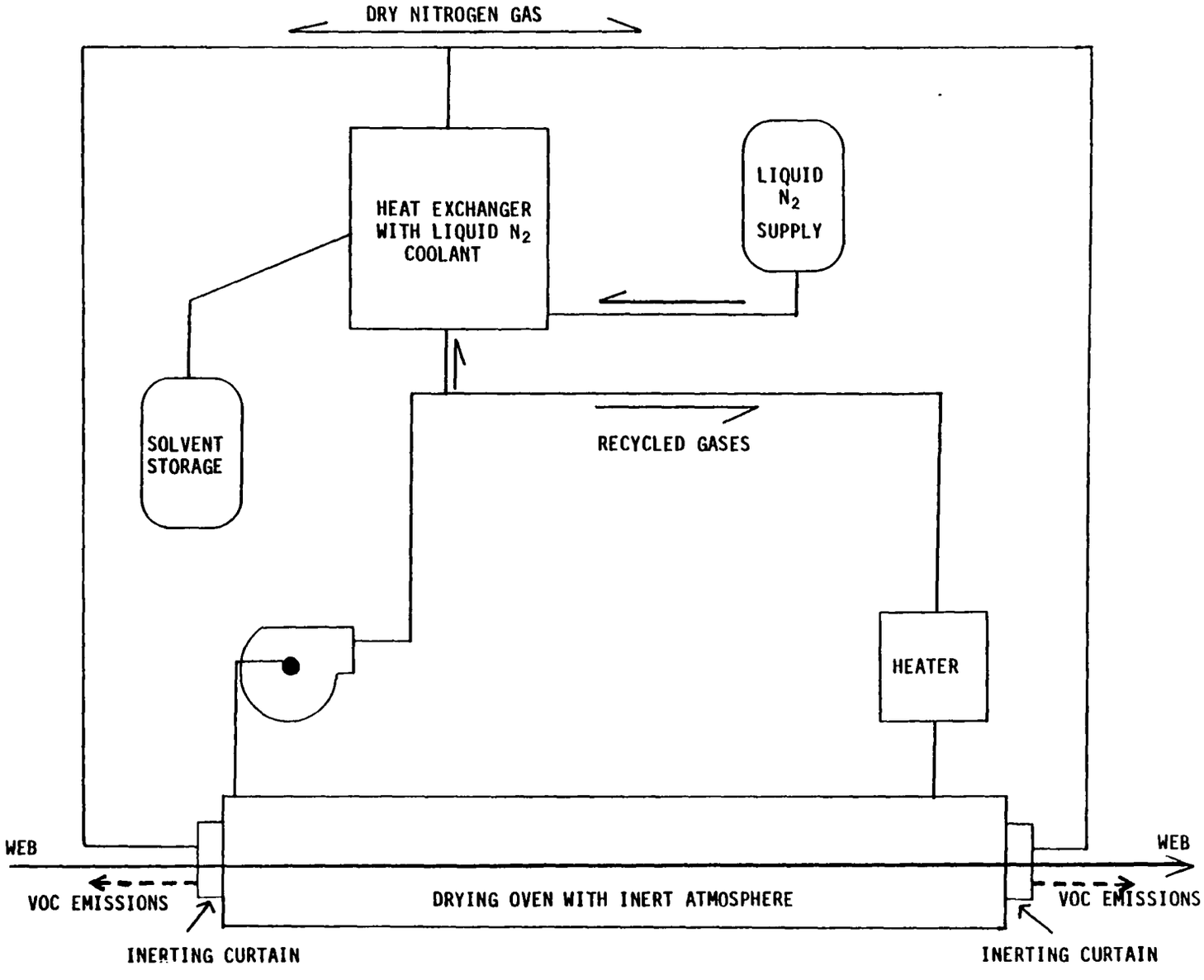

Figure 4-4. Schematic of condensation system using nitrogen.[27]

1. Type of solvent(s);
2. Temperature of the solvent laden nitrogen bleed stream;
3. Solvent laden nitrogen flow rate; and
4. Concentration of VOC's in nitrogen.

The first two parameters are characteristics of the production process. The remaining parameters are design characteristics of the condensation system. Table 4-6 presents typical process parameters for polymeric coating plants controlled by these systems.[11]

The major problem associated with the use of this system is the need to purge the unit of the inert atmosphere each time there is a production change or problem requiring workers to enter the oven. According to one plant, the normal production operation involves interruptions due to fabric and product changes, process corrections, and routine mechanical problems such as damaged rolls and contamination of coating. System purges reduce the VOC recovery efficiency.[31]

An additional operating problem anticipated with this condensation system design is the possibility of air leaking into the oven, which would create explosive conditions. However, these ovens have well-designed safety systems.

A possible limitation to use of this system is the difficulty in operating a total enclosure around the coating application/flashoff area. A purge of the inert atmosphere would be required every time workers need access to the enclosure. Each time the system is purged, VOC recovery efficiency decreases, and nitrogen requirements increase.

The only practical way to determine the overall efficiency of this system is by measuring the solvent used at the coater and the solvent recovered. Because there are no exhaust stacks, the nitrogen and any uncondensed organic vapor are recirculated. Fugitive emissions might occur at the ends of the oven if there is an inadvertent pressure increase in the oven that overcomes the action of the inert gas curtains.[32]

Presently, two polymeric coating plants use this type of condensation system to recover solvents. Plant C installed a condensation system in 1982 to recover VOC emissions from the oven for a single solvent. The solvent laden air is fed through a closed-loop system at a rate of 0.2 m^3/s (450 acfm) and a temperature of 107°C (225°F). The company estimates

TABLE 4-6. RANGE OF PROCESS PARAMETERS FOR POLYMERIC COATING PLANTS USING INERT AIR CONDENSATION SYSTEMS[1]

Parameter	Range
Gas flow rate, m^3/s (scfm)	0.21 to 8.50 (450 to 18,000) per coating line
Oven temperature, °C (°F)	66 to 121 (150 to 250)
Inlet temperature, °C (°F)	66 to 107 (150 to 225)
Inlet concentration, %	10 to 30 by volume

that 99 percent of the solvent that enters the condenser is recovered and returned to solvent storage.[33]

The other plant is using a unit developed by equipment suppliers and plant personnel that is atypical of condensation systems using a nitrogen atmosphere and is not representative of control technology applicable to the polymeric coating industry. This plant is able to augment the cooling function of the nitrogen with well water, which significantly reduces operating costs. Most plants do not have this advantage. Plant personnel estimate that the unit operates at 75 to 95 percent efficiency. Purging losses cause the variation in efficiency.[34]

4.3.2.2 Condensation System Using An Air Atmosphere. One company markets a condensation system in which solvent laden air is drawn from a tightly sealed drying oven through a counterflow heat exchanger.[35] In the heat exchanger, the solvent laden air is cooled to reduce the moisture content and heat load on the refrigerated condenser. The solvent and water formed by the refrigerated condenser are stored for further processing. The cooled solvent-free air is then blown through the heat exchanger for preheating before being returned to the oven. Drying ovens used with this system must have a minimum of air leakage and be equipped with solvent vapor concentration monitoring devices. Typically, these ovens are designed to operate at 40 to 50 percent of the LEL or at solvent concentrations of less than 0.5 percent, by volume.[36]

Recycling the solvent laden air through the ovens keeps the relative humidity in the oven exhaust quite low; consequently, the condensate contains small amounts of water. Solvent purification can be accomplished by caustic drying or by distillation, depending on the solvent purity specifications and whether a mixture of solvents is used.[11]

The interrelated factors important in the design and operation of a condensation system using a counterflow heat exchanger are:

1. Type of solvent(s);
2. Solvent laden airflow rate;
3. Temperature of the solvent laden air at the heat exchanger inlet;
4. Solvent laden air concentration in the oven exhaust;

5. Temperature of the refrigerated air entering the heat exchanger and the efficiency of the heat exchanger; and

6. Operating temperature of the refrigeration coil.

The first four parameters are characteristics of the coating process. The remaining parameters are operating variables that may affect the performance of the condenser.

Solvent laden air streams that have high water vapor concentrations tend to cause the refrigeration coils of the condensation system to freeze. To prevent the freezing, the refrigeration coils must be monitored periodically to ensure satisfactory operation. Corrosion problems are not expected for this system if the water content of the recovered solvent is less than 5 percent. Consequently, even recovery of ketones or solvent mixtures containing ketones does not require the use of stainless steel or other special construction materials if the device is properly operated.

One polymeric coating plant has recently installed an air atmosphere condensation system. However, this system has not been in operation long enough to determine actual performance under normal operating conditions.[7] The company manufacturing the system claims that the solvent recovery efficiency should exceed 90 percent.[35]

4.3.3 Incineration

Incineration is the oxidation of organic compounds by the exposure of the VOC's to high temperatures in the presence of oxygen and sometimes a catalyst. Carbon dioxide and water are the oxidation products. Incinerators are used to control VOC emissions from several polymeric coating plants (see Table 4-3). These control devices have been selected in similar industries when solvent recovery is not economically feasible or practical such as at small plants or at plants using a variety of solvent mixtures.[37] Incinerators used to control VOC emissions from polymeric coating plants may be of thermal or catalytic design and may use primary or secondary heat recovery to reduce energy consumption. Table 4-7 presents typical process parameters for polymeric coating plants using incinerators.[11]

4.3.3.1 Thermal Incinerators. Thermal incinerators are usually refractory-lined oxidation chambers with a burner located at one end.

TABLE 4-7. TYPICAL PROCESS PARAMETERS FOR POLYMERIC COATING PLANTS USING INCINERATORS[11]

Parameter	Typical values
Gas flow rate, m^3/s (scfm)	2.36 to 4.72 (5,000 to 10,000)
Oven temperature, °C (°F)	121 ± 28 (250 ± 50)
Inlet temperature, °C (°F)	93 ± 28 (200 ± 50)
Inlet concentration, %	18 LEL

In these units, part of the solvent laden air is passed through the burner along with an auxiliary fuel. The gases exiting the burner that are blended with the by-passed solvent laden air raise the temperature of the mixture to the point when oxidation of the organics takes place. With most solvents, complete oxidation is obtained in less than 0.75 seconds at temperatures of 870°C (1600°F).[38,39]

The interrelated factors important in incinerator design and operation include:

1. Type and concentration of VOC's;
2. Solvent laden airflow rate;
3. Solvent laden air temperature at incinerator inlet;
4. Burner type;
5. Efficiency of flame contact (mixing);
6. Residence time;
7. Auxiliary fuel firing rate;
8. Amount of excess air;
9. Firebox temperature; and
10. Preheat temperature.

The first three parameters are characteristics of the production process. The next three parameters are characteristics of the design of the incinerator. The auxiliary fuel firing rate is determined by the type and concentration of VOC's, the solvent laden airflow rate, firebox temperature, and the preheat temperature. The last four parameters are operating variables that may affect the performance of the incinerator. Well-designed and well-operated incinerators in similar industries have achieved VOC destruction efficiencies of 98 percent or better.[38,39]

Presently, there are 16 polymeric coating plants using thermal incinerators. Plant D uses a thermal incinerator to control VOC emissions from the oven of a single fabric coating line using primarily acetone in the coating. The solvent laden air from the oven has a flow rate of 1.9 m^3/min (4,000 scfm) and a temperature of 135°C (275°F).

The plant uses two heat exchangers along with the incinerator to recover some of the heat generated in the incinerator. In the first heat exchanger, the exhaust from the incinerator is used to raise the temperature of the oven exhaust from 135°C (275°F) to 317°C (603°F)

before it enters the incinerator. In the second heat exchanger, the exhaust from the first heat exchanger is used to heat fresh air, which is used as oven makeup air. The exhaust from the second heat exchanger is then vented to the atmosphere through a stack. Plant personnel indicate that the efficiency of the incinerator is about 97 percent.[40]

4.3.3.2 Catalytic Incinerators. Catalytic incinerators use a catalyst to promote the combustion of VOC's. The solvent laden air is preheated by a burner or heat exchanger and then brought into contact with the catalyst bed where oxidation occurs. Common catalysts used are platinum or other noble metals on supporting alumina pellets or ceramic honeycomb. Catalytic incinerators can achieve destruction efficiencies similar to those of thermal incinerators while operating at lower temperatures, i.e., 315° to 430°C (600° to 800°F). Thus, catalytic incinerators can operate with significantly lower energy costs than can thermal incinerators that do not practice significant heat recovery.[41] Construction material may also be less expensive because of the lower operating temperatures.

Factors important in the design and operation of catalytic incinerators include the factors affecting thermal incinerators as well as the operating temperature range of the catalyst. The operating temperature range for the catalyst sets the upper VOC concentration that can be incinerated. For most catalysts on alumina, catalyst activity is severely reduced by exposure to temperatures greater than 700°C (1300°F).[42] Consequently, the heating value of the inlet stream must be limited. Typically, inlet VOC concentrations must be less than 25 percent of the LEL.

A catalytic incinerator used at a polymeric coating plant is described below to illustrate the applicability of this control system.

At Plant E, the VOC emissions from each of two ovens are controlled by one of two catalytic incinerators.[43] A similar company-designed incinerator controls emissions from a smaller oven. The gas stream is preheated before it crosses the catalyst, and the catalytic reaction raises the temperature of the gas to 310°C (610°F). After moving through a heat exchanger, the gas stream is divided. A portion of the gas stream, retaining 50 percent of the heat, is vented to the atmosphere. The

remaining heat laden air either is returned to the incinerator or cooled to oven temperatures by mixing with fresh air and returned to the oven.

In 1976, one of the larger catalytic units was tested with a flame ionization detector total carbon analyzer. The test revealed that a 95.7 percent reduction in hydrocarbons was being achieved in the incinerator. The company estimates that it is currently capturing and controlling 90 percent of the VOC emissions from the oven. The catalyst is thermally cleaned every 2 months and replaced every 3 years.[43]

4.3.3.3 Heat Recovery. Heat recovery offers a means of reducing the energy consumption of the incinerator or another process in the plant. Primary heat recovery refers to the transfer of heat from the hot incinerator effluent to a relatively cool inlet VOC stream. Secondary heat recovery refers to exchange of heat from the incinerator to any other process.

Overall heat recoveries of 70 to 80 percent can be achieved by plants installing new lines in similar industries using primary and secondary heat recovery.[44] Actual overall energy savings obtained will vary with the VOC concentration in the oven exhaust, the incinerator operating temperature, and the capability of the plant to utilize secondary heat recovery.

4.4 VOC EMISSION CONTROL SYSTEMS FOR COATING MIX PREPARATION EQUIPMENT AND SOLVENT STORAGE TANKS

4.4.1 Conservation Vents and Pressure Relief Valves

Conservation vents have been used to minimize tank losses from plants (including polymeric coating plants) in a variety of industries. The conservation vents are permanently attached to the outside of sealed, vapor-tight vessels; these vents open when either positive or negative pressure within a vessel exceeds predetermined values. The pressure or vacuum settings are achieved by weights inside the vent. Conservation vents reduce VOC emissions that would occur because of cyclic changes in the temperature of the liquid inside a vessel. These losses are called breathing losses.

Figure 4-5 presents a diagram of a conservation vent.[45] The vessel pressure is applied to the underside of the pressure pallet and the top

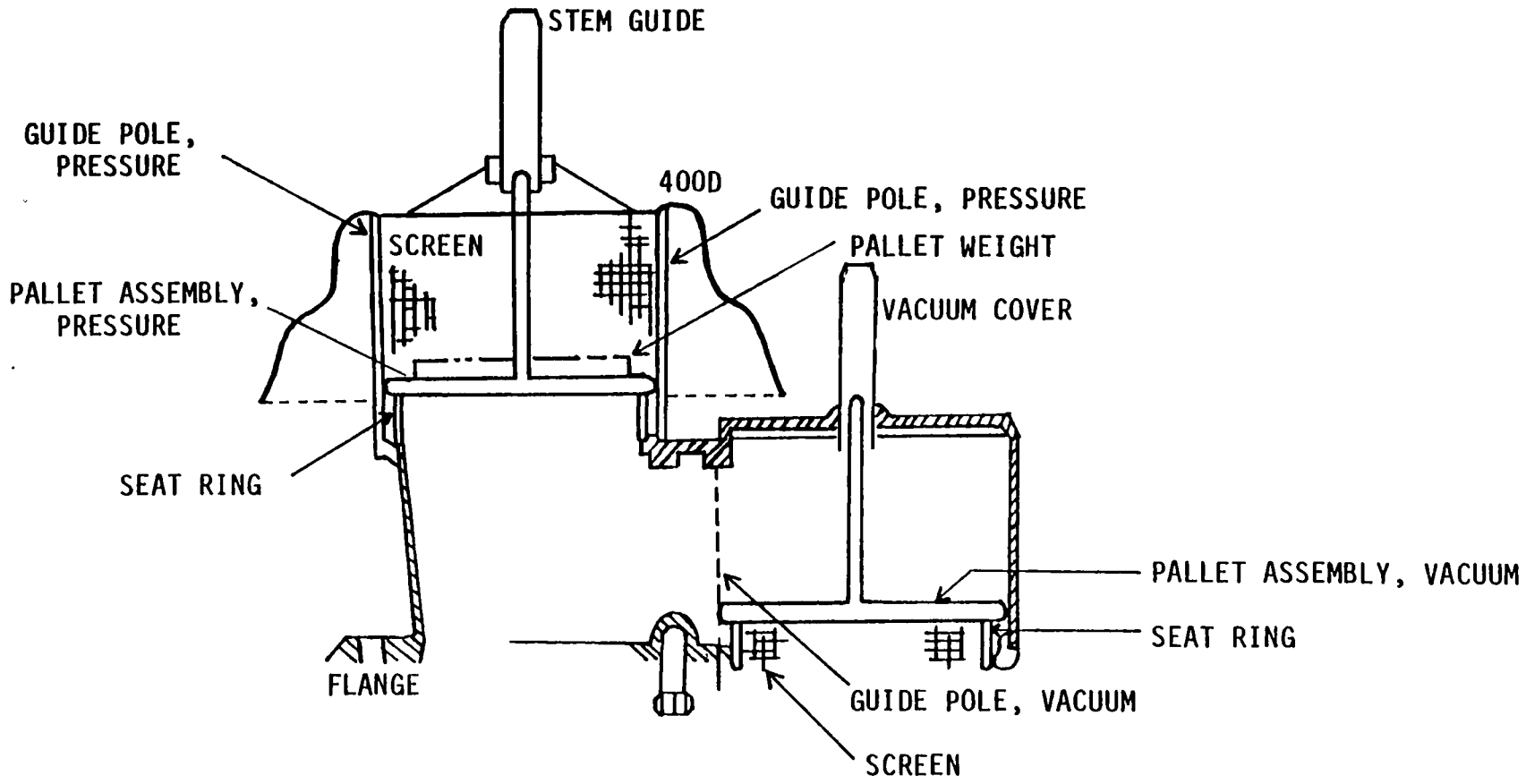

Figure 4-5. Diagram of conservation vent.[45]

side of the vacuum pallet. As long as the vessel pressure remains within the valve pressure and vacuum settings, the pallet remains in contact with the seat rings, and no venting or breathing takes place. The pressure pallet lifts from its seat ring when the vessel pressure reaches the valve pressure setting and allows the excess pressure to vent to the atmosphere. As the vessel pressure drops below the valve setting, the pressure pallet returns to the closed position. For a negative pressure (vacuum), the vacuum pallet lifts from its seat ring when the vessel vacuum reaches the valve vacuum setting, allowing air to flow into the vessel to relieve the excess vacuum condition. The vacuum pallet returns to its normal position as the vessel vacuum drops below the valve vacuum setting.[46] Conservation vents will not prevent the tank from venting when it is filled (working losses) because the internal pressure will exceed the set pressure on the valve.

The amount of VOC emission reduction achieved by conservation vents depends on the solvent vapor pressure, the diurnal temperature change, the tank size, and the vent pressure and vacuum settings. Breathing and working losses from solvent storage tanks can be estimated using emission equations.[47] Assuming yearly average diurnal temperature changes of 11°C (20°F), the true vapor pressure of toluene (the most common solvent used in the industry) (5.3 kPa [0.77 psia]), and a turnover rate of 5 volumes per year, these equations yield estimates for breathing losses of 55 to 70 percent of the total annual emissions from solvent storage tanks. According to one equipment vendor, as much as 50 percent of the total VOC emissions from the tank can be reduced with the use of properly installed and maintained conservation venting equipment to control breathing losses.[48] Conservation vents set at 0.215 kPa (0.5 ounce) vacuum and 17.2 kPa (2.5 psig) pressure control all of the breathing losses and a small amount of the working losses for toluene for an average overall efficiency of 70 percent.[49]

A pressure relief valve operates in a manner similar to that of a conservation vent. These valves operate at higher pressures achieved by internal springs, not weights, and usually do not have any vacuum settings. The pressure relief valves control all of the breathing losses and much of the working losses. Based on the vapor pressure of toluene and a

pressure setting of 103 kPa (15 psig), a control efficiency of 90 percent was calculated for pressure relief valves.[49]

4.4.2 Internal Floating Roof Solvent Storage Tanks

Emissions from solvent storage tanks have been reduced in other industries by the use of internal floating roof tanks. An internal floating roof tank has a permanently affixed external roof and an internal roof that rises and falls with the liquid level.[50] Tanks of this design reduce the area of exposed liquid surface in the tank which, in turn, decreases evaporative losses.[51] However, this control technique is inappropriate for the small (<75 m^3 [20,000 gal]) solvent storage tanks in use at polymeric coating plants. Therefore, internal floating roof tanks are not considered a control option for tanks at polymeric coating plants.

4.4.3 Disposable-Canister Unit Carbon Adsorption

This system can theoretically be used to control emissions from individual solvent storage tanks and coating preparation equipment that have low flow rates and solvent concentrations. This system is designed for air streams having flows generally less than 0.05 m^3/s (100 acfm) and low organic loading. No polymeric coating plant is known to use this system; however, it has been used to control solvent storage tank and reactor vessel emissions at plants in other industries.[52]

In this carbon adsorption system, a prefabricated canister containing activated carbon is connected to the emission source vent. The principle of operation is the same as that of a fixed-bed carbon adsorber except that there is no regeneration of spent carbon. Rather, the canister and contents are removed for disposal, and a new canister is installed. The actual useful life depends on size of the canister and the type and amount of vapors to which the carbon is exposed.[52]

Bed overheating can be a problem if these systems are used to recover ketones. The large surface area of the activated carbon allows ketone molecules to react exothermically, possibly leading to bed fires. This problem can be circumvented by keeping the carbon damp.[53]

4.5 LOW-SOLVENT COATINGS

The use of low-solvent coatings is an effective technique to reduce VOC emissions. Some combination of waterborne, higher solids, plastisol, and calendered or extruded coatings are used as the sole means of reducing VOC emissions at over 30 percent of the plants that apply polymeric coatings to supporting substrates. A combination of low-solvent coatings and control of the drying oven is used by at least 10 percent of the plants applying polymeric coatings to supporting substrates. The primary factor that influences the use of low-solvent coatings as an emission control technique is that many polymeric-coated products cannot be produced satisfactorily with low-solvent coatings at this time. Therefore, it is anticipated that solvent borne coatings will continue to be necessary in some coating applications.

Waterborne coatings allow the mixing of certain materials that would be incompatible in solvent borne coatings. Although waterborne coatings dry more slowly than solvent borne coatings, the longer drying time required is partially offset by the high solids content of waterborne coatings, which is typically 55 to 60 percent by volume.[54-56] A disadvantage of existing waterborne coatings is that, for some products, these coatings may not be able to achieve the desired final product characteristics.

The advantages of higher solids coatings compared to solvent borne coatings include reduced solvent usage, reduced energy costs for the heat to dry the coating, and faster line speeds. Some manufacturers use ultraviolet or electron beam curing with higher solids coatings, which reduces energy costs and allows for a more physically compact coating operation. A disadvantage of higher solids coatings is short pot life; they must be applied shortly after preparation.[57]

Coatings applied by calenders and extruders or in plastisol form have virtually no VOC emissions. The only emissions are due to a small percentage of plasticizers that evolve as process heat is applied to the plastisol/plasticizer. An advantage of calenders and extruders is faster line speeds, but these processes are limited to application of

fairly thick coatings. The use of plastisols is currently limited to PVC and some urethanes.

4.6 REFERENCES FOR CHAPTER 4

1. Memorandum from Thorneloe, S., MRI, to Polymeric Coating of Supporting Substrates Project File. October 24, 1984. Summary of confidential and nonconfidential information on the use of covered coating preparation equipment and the use of room ventilation for the capture of VOC emissions.

2. Memorandum from McLaughlin, N., EPA:EMB, to McCarley, J. E. Jr., EPA:EMB. May 10, 1984. Status report and recommended testing options for Elastomeric Coating NSPS (83/13).

3. Industrial Ventilation. A Manual of Recommended Practice (14th Edition). American Conference of Governmental Industrial Hygienists. Committee on Industrial Ventilation. Lansing, Michigan. pp. 4-4 - 4-5.

4. Reference 3, p. 4-1.

5. Reference 3, p. 4-12.

6. Memorandum and attachments from Glanville, J., MRI, to Magnetic Tape Project File. April 5, 1984. Summary of emission capture systems used at magnetic tape coating facilities (located in ESED confidential files).

7. Memorandum from Thorneloe, S., MRI, to Crumpler, D., EPA:CPB. July 6, 1984. Report of site visit to ODC, Incorporated, Norcross, Georgia.

8. Memorandum from Newton, D., MRI, to Crumpler, D., EPA:CPB. July 25, 1983. Report of site visit to Burlington Industrial Fabric, Kernersville, North Carolina.

9. Memorandum from Thorneloe, S., MRI, to Crumpler, D., EPA:CPB. March 2, 1984. Report of site visit to Utex Industries, Inc., Weimar, Texas.

10. Memorandum from Thorneloe, S., MRI, to Polymeric Coating of Supporting Substrates Project File. October 22, 1984. Summary of confidential and nonconfidential information on the need of a worker to access the coating application/flashoff area and drying oven.

11. Memorandum from Thorneloe, S., MRI, to Elastomeric Coating of Fabrics Project File. May 9, 1984. Typical process parameters of polymeric coating plants using VOC control devices.

12. Meyer, W. Solvent Broke. Vulcan-Cincinnati, Inc. Cincinnati, Ohio. (Presented at TAPPI Test/PAP Synth. Conf. Boston. October 7-9, 1974.) pp. 109-115.

13. Danielson, John A. Air Pollution Engineering Manual. Prepared for U. S. Environmental Protection Agency, Research Triangle Park, North Carolina. Publication No. AP-40. May 1973. pp. 189-202.

14. Stunkard, C. B. Solvent Recovery From Low Concentration Emissions. Calgon Carbon Corporation. Undated.

15. Radian Corporation. Full-Scale Adsorption Applications Study: Draft Plant Test Report--Plant 3. Prepared for U. S. Environmental Protection Agency. Cincinnati, Ohio. EPA Contract No. 68-03-3038. August 19, 1982. p. 29.

16. U. S. Environmental Protection Agency. Control of Volatile Organic Emissions From Existing Stationary Sources--Volume I: Control Methods for Surface-Coating Operations. EPA-450/2-76-028. Research Triangle Park, North Carolina. November 1976. pp. 33-34.

17. Memorandum from Newton, D., MRI, to Crumpler, D., EPA:CPB. July 22, 1983. Report of site visit to Aldan Rubber Company, Philadelphia, Pennsylvania.

18. Telecon. Banker, L., MRI, with Hindle, M., Kenyon Piece Dyeworks, Inc. December 19, 1984. Information on treatment of recovered solvent blend.

19. Memorandum from Thorneloe, S., MRI, to Crumpler, D., EPA:CPB. March 28, 1984. Report of site visit to Dayco Corp., Three Rivers, Michigan.

20. Crane, G. B. Carbon Adsorption for VOC Control. U. S. Environmental Protection Agency. Chemicals and Petroleum Branch, Research Triangle Park, North Carolina. p. 1. January 1982.

21. Golba, N., and J. Mason. Solvent Recovery Using Fluidized-Bed Carbon Adsorption. Union Carbide Corporation, Tonawanda, New York. (Presented at the Water-Borne and Higher Solids Coating Symposium. New Orleans. February 17-19, 1982.) 18 p.

22. Basdekis, H. (IT Enviroscience). Emission Control Options for the Synthetic Organic Chemicals Manufacturing Industry. Control Device Evaluation, Carbon Adsorption. Prepared for U. S. Environmental Protection Agency. Research Triangle Park, North Carolina. February 1980. pp. II-25 - II-26.

23. Radian Corp. Polymeric Coating of Supporting Substrates: Emission Test Report for Utex Industries, Inc. Revised draft. Prepared for U. S. Environmental Protection Agency. Research Triangle Park, North Carolina. November 21, 1984. p. 5-24.

24. Telecon. Thorneloe, S., MRI, with Pfeiffer, R., Union Carbide Corp. August 22, 1983. Information on cost of fluidized-bed carbon adsorbers.

25. Parmele, C., H. Basdekis, and M. Clark. Evaluation of the Union Carbide PURASIV HR® Vapor Recovery System. U. S. Environmental Protection Agency. Cincinnati, Ohio. July 1983. p. 2.

26. Reference 16, p. 56.

27. Rothchild, R. Curing Coatings With an Inert Gas Solvent System. Journal of Coatings Technology. 53(675):53-56. April 1981.

28. Nikityn, J. Inert Atmosphere Solvent Recovery--Reprinted from the Journal of Industrial Fabrics. Volume I, Number 4. Spring 1983.

29. Erikson, D. (IT Enviroscience). Emission Control Options for the Synthetic Organic Chemicals Manufacturing Industry--Control Device Evaluation, Condensation. Prepared for U. S. Environmental Protection Agency. Research Triangle Park, North Carolina. July 1980. p. II-1.

30. Telecon. Thorneloe, S., MRI, with Rieman, D., Airco Industrial Gases. May 18, 1983. Information on Airco condensation system for solvent recovery.

31. Letter from Hindle, M., The Kenyon Piece Dyeworks, Inc., to Crumpler, D., EPA:CPB. March 23, 1984. Recovery efficiency data for condensation system.

32. Telecon. Beall, C., MRI, with Rieman, D., Airco Industrial Gases. February 15, 1984. Information on Airco condensation system.

33. Letter and attachments from Koch, D., Kellwood Company, to Farmer, J., EPA:ESED. February 21, 1984. Response to Section 114 letter on the elastomeric coating of fabrics.

34. Memorandum from Maxwell, C., MRI, to Crumpler, D., EPA:CPB. July 21, 1983. Report of site visit to the Kenyon Piece Dyeworks, Inc., Kenyon, Rhode Island.

35. United Air Specialists, Inc. Kon-den-Solver® for Solvent Vapor Recovery. Undated.

36. Telecon. Thorneloe, S., MRI, with Memering, L., United Air Specialists. May 4, 1983. Information on the Kon-den-Solver® system for VOC recovery.

37. Telecon. Meyer, J., MRI, with Harper, S., Verbatim Corp. March 3, 1983. Information on VOC control system at Verbatim, Sunnyvale, California, plant.

38. Memorandum from Mascone, D., EPA:CPB, to Farmer, J., EPA:ESED. July 22, 1980. Thermal incinerator performance for NSPS, Addendum.

39. Memorandum from Mascone, D., EPA:CPB, to Farmer, J., EPA:ESED. June 11, 1980. Thermal incinerator performance for NSPS.

40. Memorandum from Powers, S., MRI, to Crumpler, D., EPA:CPB. May 10, 1985. Report of site visit to the Narmco Materials facility in Anaheim, California.

41. Reference 16, p. 51.

42. Reference 16, p. 54.

43. Memorandum from Maurer, E., MRI, to Crumpler, D., EPA:CPB. February 24, 1984. Report of site visit to the Gates Rubber Company, Denver, Colorado.

44. U. S. Environmental Protection Agency. Pressure-Sensitive Tape and Label Surface Coating Industry--Background Information for Proposed Standards. EPA-450/3-80-003a. Research Triangle Park, North Carolina. September 1980. p. 4-18.

45. Varec Division, Emerson Electric Company. Gas Control Equipment Catalog S-5. Undated.

46. Telecon. Glanville, J., MRI, with Harper, S., Verbatim Corp. February 2, 1984. Information on storage tank ventilation.

47. U. S. Environmental Protection Agency. VOC Emissions From Volatile Organic Liquid Storage Tanks--Background Information for Proposed Standards. EPA 450/3-81-003a. Research Triangle Park, North Carolina. July 1984. pp. 3-26 - 3-27.

48. Varec Division, Emerson Electric Company. Pollution and Gas Control Equipment. Bulletin CP-6003-B. Undated.

49. Memo from Glanville, J., MRI, to Polymeric Coating of Supporting Substrates Project File. December 31, 1985. Calculation of conservation vent and pressure relief valve control efficiency.

50. Reference 47, p. 3-6.

51. Reference 47, p. 4-9.

52. Letter and attachments from Wetzel, J., Calgon Carbon Corp., to Beall, C., MRI. February 13, 1984. Information on Calgon's VentSorb® unit.

53. Telecon. Beall, C., MRI, with Byron, B., Tigg Corp. February 8, 1984. Information on disposable-canister carbon adsorption system.

54. Telecon. Friedman, E., MRI, with Silver, R., Aurora Bleachery, Inc. June 6, 1984. Information on waterborne coatings.

55. Telecon. Friedman, E., MRI, with Coughlin, T., Nylco Corp. June 6, 1984. Information on waterborne coatings.

56. Telecon. Friedman, E., MRI, with Lania, R., Chase and Sons. June 6, 1984. Information on waterborne coatings.

57. Telecon. Maurer, E., MRI, with Swain, R., Lembo Corp. March 7, 1984. Information on coating equipment.

5. MODIFICATION AND RECONSTRUCTION

Standards of performance apply to plants for which construction, modification, or reconstruction commenced (as defined under 40 CFR 60.2) after the date of proposal of the standards. Such plants are termed "affected facilities." Standards of performance are not applicable to "existing facilities" (i.e., facilities for which construction, modification, or reconstruction commenced on or before the date of proposal of the standards). An existing facility may become an affected facility and, therefore, be subject to the standards of performance if the facility undergoes modification or reconstruction. The enforcement division of the appropriate EPA regional office will make the final determination as to whether an existing facility is modified or reconstructed and, as a result, subject to the standards of performance as an affected facility.

Modification and reconstruction are defined under 40 CFR 60.14 and 60.15, respectively. These General Provisions are summarized in Section 5.1. Section 5.2 discusses the applicability of these provisions to facilities performing polymeric coating of supporting substrates.

5.1 PROVISIONS FOR MODIFICATION AND RECONSTRUCTION

5.1.1 Modification

With certain exceptions, any physical or operational change to an existing facility that would increase the emission rate to the atmosphere from that facility of any pollutant covered by the standard would be considered a modification within the meaning of Section 111 of the Clean Air Act. The key to determining if a change is considered a modification is whether actual emissions to the atmosphere from the facility have increased on a mass per time basis (kg/h [lb/h]) as a result of the change. Changes in emission rate may be determined by the use of emission

factors, by material balances, by continuous monitoring data, or by manual emission tests in cases where the use of emission factors does not clearly demonstrate that emissions do or do not increase. Under the current regulations, an emission increase from one facility may not be offset with a similar emission decrease at another facility to avoid becoming subject to new source performance standards (NSPS). If an existing facility is determined to be modified, it becomes an affected facility, subject to the standards of performance for the pollutant or pollutants that have increased due to modification. All emissions, not just the incremental increase in emissions, of the pollutants that have increased from the facility must be in compliance with the applicable standards. A modification to one existing facility at a plant will not cause other existing facilities at the same plant to become subject to the standards.

Under the regulations, certain physical or operational changes are not considered to be modifications even though emissions may increase as a result of the change (see 40 CFR 60.14(e)). The exceptions as allowed under 40 CFR 60.14(e) are as follows:

1. Routine maintenance, repair, and replacement (e.g., lubrication of mechanical equipment; replacement of pumps, motors, and piping; cleaning of equipment);

2. An increase in the production rate without a capital expenditure (as defined in 40 CFR 60.2);

3. An increase in the hours of operation;

4. Use of an alternative fuel or raw material if, prior to proposal of the standard, the existing facility was designed to accommodate that alternate fuel or raw material;

5. The addition or use of any system or device whose primary function is to reduce air pollutants, except when an emission control system is replaced by a system determined by EPA to be less environmentally beneficial; and

6. Relocation or change in ownership of the existing facility.

An owner or operator of an existing facility who is planning a physical or operational change that may increase the emission rate of a

pollutant to which a standard applies shall notify the appropriate EPA regional office 60 days prior to the change, as specified in 40 CFR 60.7(a)(4).

5.1.2 Reconstruction

An existing facility may become subject to NSPS if it is reconstructed. Reconstruction is defined as the replacement of the components of an existing facility to the extent that (1) the fixed capital cost of the new components exceeds 50 percent of the fixed capital cost required to construct a comparable new facility and (2) it is technically and economically feasible for the facility to meet the applicable standards. Because EPA considers reconstructed facilities to constitute new construction rather than modification, reconstruction determinations are made irrespective of changes in emission rates.

The purpose of the reconstruction provisions is to discourage the perpetuation of an existing facility for the sole purpose of circumventing a standard that is applicable to new facilities. Without such a provision, all but vestigial components (such as frames, housing, and support structures) of the existing facility could be replaced without causing the facility to be considered a "new" facility subject to NSPS. If the facility is determined to be reconstructed, it must comply with all of the provisions of the standards of performance applicable to that facility. If an owner or operator of an existing facility is planning to replace components and the fixed capital cost of the new components exceeds 50 percent of the fixed capital cost of a comparable new facility, the owner or operator must notify the appropriate EPA regional office 60 days before the construction of the replacement commences, as required under 40 CFR 60.15(d).

5.2 APPLICABILITY TO POLYMERIC COATING OF SUPPORTING SUBSTRATES

5.2.1 Examples of Modification

5.2.1.1 Solvent Storage Tanks. Few, if any, changes in the physical configuration of storage tanks that would increase emissions are anticipated. Because replacement of frames, housings, and supporting structures would not increase emissions from a storage tank, such replacement would not constitute a modification. An increase in the capacity of

a storage tank, while an unlikely occurrence, could cause emissions to increase and, therefore, could constitute a modification.

5.2.1.2 Coating Mix Preparation Equipment. No changes in the physical configuration of coating mix preparation equipment that would increase emissions are expected. Industry practice is to replace individual items of equipment if a major process change requires different processing equipment. Except for replacement to accommodate process changes, mixers, mills, and tanks are used indefinitely and repaired as needed.[1-3]

Operational changes that might increase VOC emissions would be a change in the length of time required to prepare coating or a change in raw materials. A change in processing time would not constitute a modification, however, because it would be an increase in hours of operation, which is exempted under 40 CFR 60.14(e) from modification determinations. Also under 40 CFR 60.14(e), existing facilities that change to an alternate raw material are exempted from modification determinations if the facility was designed to accommodate the raw material prior to proposal of this standard. The same coating mix preparation equipment is used to prepare the known range of coatings used in this industry.[1-3] Thus, modifications of coating mix preparation equipment are not expected.

5.2.1.3 Coating Operation. Potential modifications of polymeric coating operations and processes include changes to increase production and changes in the method of applying the polymeric coating to the substrate. Changes in the application method may affect the VOC emission rate of the coating operation. Production increases can also increase the VOC emission rate from a coating line.

The productivity of a polymeric coating operation is determined by the substrate width, the line speed, the hours of operation, and the efficiency of scheduling. Most of the equipment modifications that might be made to increase productivity involve totally new sources or investments so large as to qualify as reconstruction. Specific examples of production equipment changes are discussed below, with emphasis on the few cases where the modification providions might apply. However, in general, no changes are expected that would cause the operation to be subject to the modification provisions.

5.2.1.3.1 Changes in substrate width. Changes in the width of the substrate would increase both production and emissions. The maximum substrate width that any given coating operation can accommodate is an integral part of the basic design of the system. Substrate width cannot be increased significantly beyond this maximum without installing essentially all new equipment. It is, therefore, unlikely that such a modification would be made.

5.2.1.3.2 Changes in line speed. An increase in maximum operating speed is the most likely change that could constitute a modification. The maximum operating speed for a given facility depends on both the basic design of the coating operation and on the specifications for each product. The factors that might constitute an operating speed limitation include:

1. A limitation on the available power and/or speed of the motors that drive the substrate;

2. Drying limitations based either on the amount of heat available or on residence time in the oven;

3. A limitation on air circulation in the drying oven that causes the lower explosive limit (LEL) to be exceeded; and

4. A limitation on the maximum speed at which a smooth coating can be achieved with a given coating head or at which the line can be operated without shutdowns.

Any equipment changes made to obtain an increased production rate (such as larger/faster drive motors, higher capacity boilers for the ovens, higher capacity oven air circulating blowers, or LEL sensors with alarm/shutdown capacity) would require capital expenditure and result in increased emissions and could cause the facility to come under the modification provisions. Depending on the cost of the changes, they might, however, cause a considered facility to come under the reconstruction provisions.

5.2.1.3.3 Raw material changes. Many changes in coating specifications (such as percentage of VOC's or coating thickness) could also result in increased VOC emissions. Such changes would only be considered modifications if the coating operation equipment had to be altered to accommodate use of that coating. However, coating reformulation

tends to be directed toward reducing VOC content. It is unlikely that any equipment modifications resulting from reformulation would increase VOC emissions.

5.2.1.3.4 Changes in the hours available for operation and/or scheduling efficiency. A typical polymeric coating operation operates approximately 80 hours per week.[4] Significant increases in production and emissions could result from extending the working hours, but an increase in the hours of operation is specifically exempted from modification considerations by 40 CFR 60.14(e).

Even during the hours of operation, a coating operation may be shut down to change products. Each time a change is made in the type of substrate to be coated on a given operation or the type of coating to be applied, time must be allowed to clean the equipment and to reset the controls to the new product specifications. Thus, careful scheduling can increase production, which will result in increased VOC emissions. The careful scheduling of production would not be considered a modification if that production rate increase can be accomplished without a capital expenditure.

5.2.2 Examples of Reconstruction

Reconstruction, as defined under 40 CFR 60.15, might occur if the components of a polymeric coating plant (i.e., storage tanks, coating mix preparation equipment, coating operation, and other miscellaneous sources) are replaced and if the fixed capital costs of the replacement components exceed 50 percent of the fixed capital costs of a comparable new facility.

There appear to be no circumstances which would cause the relatively small storage tanks (less than 40 m^3 [10,000 gal]) used by polymeric coaters to fall under the reconstruction provision.[4] Because associated support structures (frames, housing, etc.) are not part of a tank, replacement of such structures would not constitute reconstruction.

Repair of coating mix preparation equipment may occasionally incur sufficient expense to qualify as reconstruction if the repairs are extensive. Replacement of single components in a coating operation (i.e., a change in coating application method or drying oven) occurs rarely, but replacement of the oven in particular may incur sufficient expense to

require EPA's determination as to whether it would be considered a reconstruction of a coating operation.

Some of the coating application equipment changes discussed in Section 5.2.1.3 are likely to incur sufficient cost to qualify as reconstructions. Any change of equipment to increase substrate width significantly would probably require such extensive equipment replacement that it would be considered a reconstruction. It is doubtful that any such change would occur since the plant probably could install a new coating operation for approximately the same expenditure. Similarly, equipment changes to increase operating speed could be costly enough to require a reconstruction determination. This would be most likely in cases where oven capacity limits line speed. Reconstruction of polymeric coating facilities is expected to occur only in isolated cases, if at all.

5.3 REFERENCES FOR CHAPTER 5

1. Telecon. Friedman, E., MRI, with Melton, D., Moorehouse Industries, Inc. June 13, 1984. Information on mix room equipment.

2. Telecon. Maurer, E., MRI, with Herman, K., Sherman Machinery, Inc. March 8, 1984. Information on mix room equipment.

3. Telecon. Friedman, E., and Banker, L., MRI, with Mueller, J., Day Mixing Company. June 5, 1984. Information on mix room equipment.

4. Memorandum from Thorneloe, S., MRI, to Polymeric Coating of Supporting Substrates Project File. May 9, 1984. Typical process parameters for elastomeric coating of fabric facilities using VOC control devices.

6. MODEL PLANTS AND REGULATORY ALTERNATIVES

This chapter describes model plants that are representative of new plants that apply polymeric coating to supporting substrates. A model plant is defined to include a model coating operation and associated model solvent storage tanks and model coating mix preparation equipment. Also, presented in this chapter are the regulatory alternatives that represent the various levels of VOC emission control that could be achieved by the use of available control devices. The model plants and regulatory alternatives are used in subsequent chapters as the basis for estimating the environmental, economic, and energy impacts associated with the control of VOC emissions.

6.1 MODEL PLANTS

As discussed in Chapters 3 and 4, the polymeric coating process encompasses a wide range of coatings, substrates, end products, production processes, and VOC control options. The model plants presented here are parametric descriptions of polymeric coating lines and represent typical plants in the industry.[1-5] The model plants are based on specific information from polymeric coating plants, general information from various industry contacts, and published literature.

The model plants reflect polymeric coating lines that are expected to be built in the future, whether they are captive or commission coaters. The model plants represent the fact that expansion is expected to occur on the basis of a single coating operation with the possibility of expansion of support areas (solvent storage tanks and coating mix preparation equipment).

Annual solvent consumption rates were selected as the basis for determining the model plant size categories because these data are more

readily available than either data pertaining to the total amount of substrate coated per year or the amount of coating applied per unit area.[6] Because of the variety of end products and their inherent production process differences, solvent consumption is a more meaningful common denominator than annual production rates based on line speed and coating thickness.

Solvent consumption may vary on a single line because of several factors. In general, production variables such as substrate width, coating thickness, line speed, and utilization rate affect the rate of coating consumption which necessarily affects solvent consumption. The hours of actual line operation are another important variable.

6.1.1 Solvent Storage Tanks

The solvent storage tanks for the model plant are those tanks required to store and supply solvents to the model coating mix preparation equipment. While most polymeric coating plants presently use underground solvent storage tanks, it is expected that new tanks will be above ground, fixed roof tanks. Above ground tanks are easier to install and maintain and, most importantly, reduce concerns regarding groundwater contamination.[7]

The number and capacity of the model storage tanks are given in Table 6-1. The number and capacity are based on the calculated annual solvent consumption of the model plants and an inventory turnover rate of five times per year.[8]

6.1.2 Coating Mix Preparation Equipment

The coating mix preparation equipment for the model plant will contain the equipment (mixers and holding tanks) required to supply coating to the model coating operation. The model coating mix preparation equipment parameters are given in Table 6-2. The capacity and number of pieces of coating mix preparation equipment required to process the coatings are based on discussions with vendors and are representative of equipment configurations likely to be installed in the future. Because urethane coatings are purchased premixed, coating mix preparation equipment is not required and model coating mix preparation equipment parameters are not included for a urethane coating operation.[4]

TABLE 6-1. MODEL SOLVENT STORAGE TANK PARAMETERS

Parameter	Model tank configuration		
	A	B	C
Solvent usage, m^3/yr (gal/yr)	113.6 (30,000)	189.3 (50,000)	378.5 (100,000)
No. of tanks	2	2	2
Capacity of each tank, m^3 (gal)	11.4 (3,000)	18.9 (5,000)	37.9 (10,000)
No. of turnovers per year	5	5	5
Total emissions, Mg/yr (ton/yr)[a]	0.06 (0.07)	0.11 (0.12)	0.27 (0.30)

[a]Based on calculated emission rate of toluene using volatile organic liquid storage tanks equations for above ground fixed roof tanks.

TABLE 6-2. MODEL COATING MIX PREPARATION EQUIPMENT PARAMETERS

Parameter[a]	1. Rubber-coated industrial fabric			3. Rubber-coated cord		4. Epoxy-coated fiberglass	
	A	B	C	A	B	B	C
Coating prepared, m^3/d (gal/d)	0.68 (180)	1.01 (290)	2.20 (580)	0.53 (140)	0.83 (220)	1.97 (520)	3.90 (1,030)
Solvent used, m^3/d (gal/d)	0.45 (120)	0.72 (190)	1.44 (380)	0.45 (120)	0.72 (190)	0.80 (210)	1.55 (410)
Equipment, No. of:							
100-gallon mixers	1	0	0	2	1	0	1
200-gallon mixers	1	2	4	0	1	1	1
330-gallon mixers	0	0	0	0	0	2	3
55-gallon holding tanks	4	6	11	3	4	10	19
Equipment ventilation rate, m^3/min (scfm)[b]	6 (200)	4 (150)	9 (300)	6 (200)	4 (150)	4 (150)	9 (300)
Uncontrolled emissions, Mg/yr (tons/yr)[c]	9.5 (10.5)	15 (17)	31 (34)	9.5 (10.5)	15 (17)	15 (17)	31 (34)

[a]Based on solvent consumption.
[b]Based on solvent concentration of 4,000 ppm in the exhaust. Hours of operation assumed to be equal to those of coating line.
[c]Based on 10 percent of total VOC emissions.

Rubber compounding equipment such as roll mills or Banbury mixers are not included in the model coating mix preparation equipment parameters for the operations using rubber coating. If a new rubber coating operation is added to an existing plant, rubber compounding could be handled by the existing equipment. In the case of a new plant consisting of a single coating operation, it would be less costly to purchase compounded rubber than to install rubber compounding equipment.[9]

6.1.3 Coating Operation

The coating operation of the model plant is defined as the coating application/flashoff area and associated drying oven required to manufacture polymeric coated substrates. In some instances, the coating operation may include more than one coating application/flashoff area and associated drying oven operated in a continuous series for the purpose of applying multiple coats on the substrate. However, for the purposes of impact analysis, a single application/flashoff area and drying oven is being evaluated because it represents the most typical case.

Parameters for four model coating operations are summarized in Tables 6-3, 6-4, and 6-5. The parameters were chosen to accomodate a range of market conditions, such as import competition and changes in consumer demand, and differences in end-product values. The parameters also address the variations in coating formulation, substrate types, process equipment, and VOC capture and control devices used.

6.1.3.1 Coating Formulation. Rubber, urethane, and epoxy coatings are widely used polymeric coatings, and model coating operation parameters have been developed for processes using these typical coating formulations. Acrylic coatings, which are typically waterborne, and both PVC coatings and rubber coatings containing 100 percent solids emit few or no VOC's. Therefore, the coating processes associated with these coating formulations are not included in the model coating operation parameters. Solvent borne silicone and nitrocellulose coatings are not widely used and are expected to be represented by the model coating operation parameters for rubber-coated industrial fabric. Phenolic coatings are represented by the model coating operation for epoxy-coated fiberglass.[10]

6.1.3.2 Substrate Types. Table 6-5 summarizes the substrate types and annual substrate consumption for typical products produced on each model coating operation.[11]

TABLE 6-3a. MODEL COATING LINE PARAMETERS FOR CARBON ADSORBER OR INCINERATOR CONTROL OPTIONS (Metric Units)

Parameter	Rubber-coated industrial fabric			Urethane-coated fabric		Rubber-coated cord		Epoxy-coated fiberglass	
	A	B	C	B	C	A.	B	B	C
Production									
Total volume of coating used, m^3/yr	169	274	548	306	613	129	209	488	975
Amount of solvent used, m^3/yr (Mg/yr)	110 (95)	178 (154)	356 (308)	168 (154)	333 (308)	110 (95)	178 (154)	199 (154)	390 (308)
End product(s)	Diaphragms, printing blankets			Luggage, tents		V-belts		Aircraft/military products	
Operating Parameters									
Period of operation, h/yr	2,000[a]	4,000[b]	4,000	4,000	4,000	2,000	4,000	4,000	4,000
Utilization rate, %	50			50	50	50	50	50	50
Actual operation, h/yr	1,000	2,000	2,000	2,000	2,000	1,000	2,000	2,000	2,000
No. of operators	3			4	4	2	2	4	4
Process Parameters									
Coating composition									
Solids	Rubber			Urethane		Rubber		Epoxy	
% by volume	35			45		15		60	
Solvent(s)	Toluene			DMF, Toluene		Toluene		Acetone	
% by volume	65			35,20		85		40	
Coating equipment									
Coating applicator	Knife-over-roll, dip tank			Knife-over-roll reverse-roll		40-cord dip tank		Dip tank	
Drying oven	Single-zone			Double-zone		Triple-zone		Single-zone	
Coating application									
Oven temperature, °C	93	93	93	177	177	232	232	121	121
Oven ventilation rate, m^3/min[c]	116	102	188	104	209	116	102	102	148
Solvent concentration in exhaust, % LEL	25	23	25	25	25	25	23	18	25
Control device									
Carbon adsorber inlet temperature, °C	35			35	35	35	35	35	35
Incinerator heat exchanger inlet temperature, °C	93			177	177	232	232	121	121
Inlet solvent concentration, ppmV	3,250	2,990	3,230	3,250	3,250	3,250	2,990	4,680	6,500
Uncontrolled VOC emissions from coating operation, Mg/yr[d]	85.5	139	277	154	308	85.5	139	139	277

[a]Period of operation 8 h/d, 5 d/wk, 50 wk/yr.
[b]Period of operation 16 h/d, 5 d/wk, 50 wk/yr.
[c]Standard conditions are 20°C and 1 atmosphere pressure.
[d]Based on 90 percent of total VOC emissions except for the urethane coating operations which are based on 100 percent of total VOC emissions because urethane coatings are purchased premixed and, therefore, have no coating mix preparation equipment emissions.

TABLE 6-3b. MODEL COATING LINE PARAMETERS FOR CARBON ADSORBER OR INCINERATOR CONTROL OPTIONS (English Units)

Parameter	Rubber-coated industrial fabric			Urethane-coated fabric		Rubber-coated cord		Epoxy-coated fiberglass	
	A	B	C	B	C	A	B	B	C
Production									
Total volume of coating used, gal/yr	44,690	72,350	144,700	80,900	161,900	34,180	55,330	128,000	257,600
Amount of solvent used, gal/yr	29,050	47,030	94,050	44,500	88,050	29,050	47,030	52,520	103,030
(tons/yr)	(105)	(170)	(340)	(170)	(340)	(105)	(170)	(170)	(340)
End product(s)	Diaphragms, printing blankets			Luggage, tents		V-belts		Aircraft/military products	
Operating Parameters									
Period of operation, h/yr	2,000[a]	4,000[b]	4,000	4,000	4,000	2,000	4,000	4,000	4,000
Utilization rate, %	50			50	50	50	50	50	50
Actual operation, h/yr	1,000	2,000	2,000	2,000	2,000	1,000	2,000	2,000	2,000
No. of operators	3			4	4	2	2	4	4
Process Parameters									
Coating composition									
Solids	Rubber			Urethane		Rubber		Epoxy	
% by volume	35			45		15		60	
Solvent(s)	Toluene			DMF, Toluene		Toluene		Acetone	
% by volume	65			35,20		85		40	
Coating equipment									
Coating applicator	Knife-over-roll, dip tank			Knife-over-roll reverse-roll		40-cord dip tank		Dip tank	
Drying oven	Single-zone			Double-zone		Triple-zone		Single-zone	
Coating application									
Oven temperature, °F	200			350	350	450	450	250	250
Oven ventilation rate, scfm[c]	4,100	3,600	6,640	3,690	7,380	4,100	3,600	3,600	5,220
Solvent concentration in exhaust, % LEL	25	23	25	25	25	25	23	18	25
Control device									
Carbon adsorber inlet temperature, °F	95			95	95	95	95	95	95
Incinerator heat exchanger inlet temperature, °F	200			350	350	450	450	250	250
Inlet solvent concentration, ppmV	3,250	2,990	3,230	3,250	3,250	3,250	2,990	4,680	6,500
Uncontrolled VOC emissions from coating operation, tons/yr[d]	94.5	153	306	170	340	94.5	153	153	306

[a]Period of operation 8 h/d, 5 d/wk, 50 wk/yr.

[b]Period of operation 16 h/d, 5 d/wk, 50 wk/yr.

[c]Standard conditions are 68°F and 1 atmosphere pressure.

[d]Based on 90 percent of total VOC emissions except for the urethane coating operations which are based on 100 percent of total VOC emissions because urethane coatings are purchased premixed and, therefore, have no coating mix preparation equipment emissions.

TABLE 6-4a. MODEL COATING LINE PARAMETERS FOR CONDENSATION CONTROL OPTION (Metric Units)

Parameter	Rubber-coated industrial fabric			Urethane-coated fabric		Rubber-coated cord		Epoxy-coated fiberglass	
	A	B	C	B	C	A	B	B	C
Production									
Total volume of coating used, m/yr	169	274	548	306	613	129	209	488	975
Amount of solvent used, m^3/yr (Mg/yr)	110 (95)	178 (154)	356 (308)	168 (154)	333 (308)	110 (95)	178 (154)	199 (154)	390 (308)
End product(s)	Diaphragms, printing blankets			Luggage, tent		V-belts		Aircraft/military products	
Operating Parameters									
Period of operation, h/yr	2,000[a]	4,000[b]	4,000	4,000	4,000	2,000	4,000	4,000	4,000
Utilization rate, %		50		50	50	50	50	50	50
Actual operation, h/yr	1,000	2,000	2,000	2,000	2,000	1,000	2,000	2,000	2,000
No. of operators		3		4	4	2	2	4	4
Process Parameters									
Coating composition									
Solids	Rubber			Urethane		Rubber		Epoxy	
% by volume	35			45		15		60	
Solvent(s)	Toluene			DMF, Toluene		Toluene		Acetone	
% by volume	65			35,20		85		40	
Coating equipment									
Coating applicator	Knife-over-roll, dip tank			Knife-over-roll reverse-roll		40-cord dip tank		Dip tank	
Drying oven	Single-zone			Double-zone		Triple-zone		Single-zone	
Coating application									
Oven temperature, °C		93		177	177	232	232	121	121
Oven ventilation rate, m/min[c]	102	102	118	102	131	102	102	102	102
Solvent concentration in exhaust, % LEL	28	23	40	26	40	28	23	18	36
Control device									
Inlet temperature, °C		82		166	166	221	221	110	110
Inlet solvent concentration, ppmV	3,640	2,990	5,200	3,380	5,200	3,640	2,990	4,680	9,360
Uncontrolled VOC emissions from coating operation, Mg/yr[d]	85.5	139	277	154	308	85.5	139	139	277

[a]Period of operation 8 h/d, 5 d/wk, 50 wk/yr.
[b]Period of operation 16 h/d, 5 d/wk, 50 wk/yr.
[c]Standard conditions are 20°C and 1 atmosphere pressure.
[d]Based on 90 percent of total VOC emissions except for the urethane coating operations which are based on 100 percent of total VOC emissions because urethane coatings are purchased premixed and, therefore, have no coating mix preparation equipment emissions.

TABLE 6-4b. MODEL COATING LINE PARAMETERS FOR CONDENSATION CONTROL OPTION (English Units)

Parameter	Rubber-coated industrial fabric			Urethane-coated fabric		Rubber-coated cord		Epoxy-coated fiberglass	
	A	B	C	B	C	A	B	B	C
Production									
Total volume of coating used, gal/yr	44,690	72,350	144,700	80,900	161,900	34,180	55,330	128,000	257,600
Amount of solvent used, gal/yr	29,050	47,030	94,050	44,500	88,050	29,050	47,030	52,520	103,030
(tons/yr)	(105)	(170)	(340)	(170)	(340)	(105)	(170)	(170)	(340)
End product(s)	← Diaphragms, printing blankets →			← Luggage, tents →		← V-belts →		← Aircraft/military products →	
Operating Parameters									
Period of operation, h/yr	2,000[a]	4,000[b]	4,000	4,000	4,000	2,000	4,000	4,000	4,000
Utilization rate, %	← 50 →			50	50	50	50	50	50
Actual operation, h/yr	1,000	2,000	2,000	2,000	2,000	1,000	2,000	2,000	2,000
No. of operators	← 3 →			4	4	2	2	4	4
Process Parameters									
Coating composition									
Solids	← Rubber →			← Urethane →		← Rubber →		← Epoxy →	
% by volume	← 35 →			← 45 →		← 15 →		← 60 →	
Solvent(s)	← Toluene →			← DMF, Toluene →		← Toluene →		← Acetone →	
% by volume	← 65 →			← 35,20 →		← 85 →		← 40 →	
Coating equipment									
Coating applicator	← Knife-over-roll, dip tank →			← Knife-over-roll reverse-roll →		← 40-cord dip tank →		← Dip tank →	
Drying oven	← Single-zone →			← Double-zone →		← Triple-zone →		← Single-zone →	
Coating application									
Oven temperature, °F	← 200 →			350	350	450	450	250	250
Oven ventilation rate, scfm[c]	3,600	3,600	4,160	3,600	4,620	3,600	3,600	3,600	3,600
Solvent concentration in exhaust, % LEL	28	23	40	26	40	28	23	18	36
Control device									
Inlet temperature, °F	← 180 →			330	330	430	430	230	230
Inlet solvent concentration, ppmV	3,640	2,990	5,200	3,380	5,200	3,640	2,990	4,680	9,360
Uncontrolled VOC emissions from coating operation, tons/yr[d]	94.5	153	306	170	340	94.5	153	153	306

[a] Period of operation 8 h/d, 5 d/wk, 50 wk/yr.
[b] Period of operation 16 h/d, 5 d/wk, 50 wk/yr.
[c] Standard conditions are 68°F and 1 atmosphere pressure.
[d] Based on 90 percent of total VOC emissions except for the urethane coating operations which are based on 100 percent of total VOC emissions because urethane coatings are purchased premixed and, therefore, have no coating mix preparation equipment emissions.

TABLE 6-5. MODEL COATING OPERATION PARAMETERS FOR SUBSTRATE TYPE AND CONSUMPTION

Parameter	Rubber-coated industrial fabric			Urethane-coated fabric		Rubber-coated cord		Epoxy-coated fiberglass	
	A	B	C	B	C	A	B	B	C
Product 1	←	Diaphragms	→	←	Luggage	→	←	V-belts	→	←	Aircraft/ military products	→
Substrate									
Type	←	Nylon fabric	→	←	8-ounce polyester	→	←	Nylon cord	→	←	Fiberglass	→
Width, inches	←	48	→		60	60	←	Cord	→		72	72
Coated substrate, yd^2/yr	580,970	940,550	1,881,100	4,700,290	9,406,390		193 tons/yr	313 tons/yr		1,512,112	3,024,224
Product 2	←	Printing blankets	→	←	Tents	→	←	N/A[b]	→	←	N/A	→
Substrate									
Type	←	Cotton fabric	→	←	Nylon fabric	→						
Width, inches		72			60	60						
Coated substrate, yd^2/yr	137,508	222,616	445,230	13,091,481	26,199,144							

[a] Plant size based on solvent consumption.
[b] Not applicable.

6.1.3.3 Process Equipment. The primary types of equipment used for applying the coating to the substrate are knife-over-roll, dip tank, and reverse-roll coaters.[3] All three types of coating application methods are included in the model coating operation parameters, where applicable, for subsequent evaluation of the economic impact of various regulatory alternatives.

The drying ovens and drying temperatures are representative of those used by polymeric coating plants to dry/cure each of the coating types. The ventilation rates for the drying ovens were calculated based on oven operation at a percentage of the lower explosive limit (LEL) of the solvents.[12] The LEL values are assumed to be representative of those that will be used in the industry.

6.1.3.4 VOC Capture and Control Devices. The VOC capture devices used on the coating application/flashoff area of the model coating operations are total enclosures and partial enclosures. The calculation of the ventilation rates required is based on specific suction velocity and design of the vents located at either side of the substrate in the application/flashoff area. The exhaust air from the total and partial enclosures is directed into the oven and through the VOC control device.[12]

The VOC control devices used at polymeric coating plants are carbon adsorbers, incinerators, and condensation systems.[1] Model coating operation parameters have been developed for fixed-bed carbon adsorbers and thermal incinerators because these are the most commonly used control devices. Separate model coating operation parameters are also provided for a condensation system using an air atmosphere. Effective control of fugitive VOC emissions from the application/flashoff area has not been demonstrated when a condensation system using an inert atmosphere in the oven is used. Therefore, model coating operations parameters were not developed for this control device.

For model coating operations controlled by carbon adsorbers or incinerators, the drying oven exhaust rate was calculated for each solvent mixture and usage rate assuming operation of the oven at a concentration of 25 percent of the LEL of the solvents. The ovens can be designed to operate safely at this level, and ovens are operated at this level in other similar surface coating operations. While perhaps

more cost effective, a higher VOC concentration was not chosen due to the increased potential for premature breakthrough and carbon bed fires. Furthermore, carbon adsorption can achieve 95 percent or greater removal efficiencies cost effectively when the VOC concentration in the exhaust stream is 25 percent of the LEL.

For model coating operations controlled by air atmosphere condensation systems, the drying oven exhaust rate was calculated for each solvent mixture and usage rate assuming operation of the oven at 40 percent of the LEL. This solvent concentration was based on discussions with an equipment vendor on condensation system design considerations and is necessary to operate the unit cost effectively.[14]

In order to capture most of the emissions from the enclosure, a minimum face velocity of 0.6 m/s (100 ft/min) must be maintained at all openings according to standard industrial ventilation practices. This results in a minimum oven ventilation rate of 102 m/min (3,600 scfm), which is the sum of the exhaust from the capture device and the infiltration from the two openings in the oven for substrate entrance and exit. Therefore, some model coating operation parameters include solvent concentrations in the oven exhaust of less than 25 and 40 percent for carbon adsorber or incinerator and condensation system control, respectively.

6.2 REGULATORY ALTERNATIVES

Separate regulatory alternatives have been developed for solvent storage tanks, coating mix preparation equipment, and coating operations. The regulatory alternatives considered for solvent storage tanks, coating mix preparation equipment, and coating operations represent the various emission control levels that are achievable based on available emission control equipment. The control levels assigned to the regulatory alternatives are calculated using estimated uncontrolled emission rates and estimated efficiencies of various capture and control device options.

6.2.1 Solvent Storage Tanks

The regulatory alternatives for solvent storage tanks are presented in Table 6-6. The four alternatives for the tanks are:

TABLE 6-6. REGULATORY ALTERNATIVES FOR SOLVENT STORAGE TANKS

Reg. Alt.	Control device	Percent VOC control
I	None	0
II	Conservation vents, set at 17.2 kPa (2.5 psig)	70[a]
III	Pressure relief valves, set at 103.4 kPa (15 psig)	90[a]
IV	Carbon adsorber or condensation system	95

[a]Approximate control level based on ratio of calculated breathing losses to calculated total emissions from tanks.

1. Alternative I. Baseline. (No control). This case represents uncontrolled solvent storage tanks. Most States do not require any control of emissions from this source.

2. Alternative II. (70 percent control). This case represents the approximate level of emission reduction achievable by control of breathing losses by the use of conservation vents set at 17.2 kPa (2.5 psig) installed on solvent storage tanks.

3. Alternative III. (90 percent control). This case represents the approximate level of emission reduction achievable by control of breathing losses by the use of pressure relief valves set at 103 kPa (15 psig) installed on storage tanks.

4. Alternative IV. (95 percent control). This control level can be achieved by venting all storage tank emissions to a control device that is 95 percent efficient.

6.2.2. Coating Mix Preparation Equipment

The regulatory alternatives for coating mix preparation equipment are presented in Table 6-7. The three alternatives are:

1. Alternative I. Baseline. (No control). This case represents uncontrolled coating mix preparation equipment. The States do not require any control of emissions from this source.

2. Alternative II. (40 percent control). This case represents the approximate level of emission reduction achievable by control of breathing losses by installation of fastened, gasketed covers with conservation vents on each piece of coating mix preparation equipment.

3. Alternative III. (95 percent control). This case represents the emission reduction achievable by covering the coating mix preparation equipment and ducting the vapors to a control device that is 95 percent efficient.

6.2.3. Coating Operation

The regulatory alternatives for the coating operation with the associated emission capture and control device configurations are presented in Table 6-8. The three alternatives are:

1. Alternative I. Baseline. (81 percent control). This case corresponds to the Control Techniques Guideline (CTG) recommended emission limit of 0.35 kg VOC/liter (2.9 lb VOC/gallon) of coating, minus water

TABLE 6-7. REGULATORY ALTERNATIVES FOR COATING MIX PREPARATION EQUIPMENT

Reg. Alt.	Control device	Percent VOC control
I	None	0
II	Fastened, gasketed covers with conservation vents	40[a]
III	Carbon adsorber or condensation system	95

[a]Approximate control level based on ratio of calculated breathing losses to calculated total emissions from tanks.

TABLE 6-8. REGULATORY ALTERNATIVES FOR COATING OPERATIONS

Reg. Alt.	Recommended abatement technology: Emission capture: Application/flashoff	Recommended abatement technology: Emission capture: Oven[a]	Recommended abatement technology: Emission control	Emission capture efficiency, percent	Control device efficiency, percent	Overall VOC control, percent
I	Suction into oven	Negative pressure	Carbon adsorber or condensation system	90	90[b]	81
II	Partial enclosure	Negative pressure	Carbon adsorber or condensation system	95	95[c]	90
III	Total enclosure	Negative pressure	Carbon adsorber or condensation system	98	95[c]	93
IV	Total enclosure	Negative pressure	Incinerator	98	98[c]	96

[a]For all the alternatives, the use of well-designed oven with no losses to room is assumed.
[b]Recommended efficiency of carbon adsorber in the CTG.
[c]Based on actual emission measurements.

for existing polymeric coating plants and is based on application of reasonably available control technology (RACT) to polymeric coating operations. The 81 percent control level of Alternative I assumes that plants are capturing and venting 90 percent of the emissions from the coating operation to a control device that achieves 90 percent VOC control.

2. Alternative II. (90 percent control). The 90 percent control level of Alternative II can be achieved by capturing approximately 95 percent of all VOC emissions from the coating operation and by venting these emissions through a control device that achieves 95 percent control efficiency. The required 95 percent capture efficiency can be achieved by use of a partial enclosure to collect a portion of the emissions from the coating application/flashoff area in addition to capturing 100 percent of the drying oven emissions.

3. Alternative III. (93 percent control). This case is based on capture of at least 98 percent of the emissions from the coating operation and control of these emissions by a 95 percent efficient control device. This results in an overall 95 percent control level. The required 98 percent capture efficiency can be achieved by use of a total enclosure to collect emissions from the application/flashoff area in addition to capturing 100 percent of the drying oven emissions.

4. Alternative IV. (96 percent control). This case is based on capture of at least 98 percent of emissions from the coating operation and control by a 98 percent efficient control device. Capture of coating operation emissions can be achieved by use of a total enclosure around the application/flashoff area and by capturing 100 percent of the drying oven emissions.

6.2.4. Low-Solvent Coatings

An optional technique for achieving emission reductions equivalent to or greater than those associated with the regulatory alternatives is the use of low-solvent coatings (waterborne or higher solids). Reformulation to low-solvent-coatings is not a universally applicable solution because adequate substitutes for traditional solvent borne coatings are not yet available for many products. Because it is not a universally

available alternative, the use of low-solvent coatings was not considered as a regulatory alternative.

Due to the wide range of products produced by polymeric coaters, there is a significant range of coating formulations in use. No single formulation can represent all of the coatings in use. Because of the lack of a single baseline coating for polymeric coating plants, the use of low-solvent coatings could not be considered an option to achieving the emission reductions required by Regulatory Alternatives II through IV. For example, a polymeric coating plant that is currently using a coating containing 0.56 kg VOC/ℓ (4.70 lb VOC/gal) of coating applied would have to switch to a coating containing 0.10 kg VOC/ℓ (0.83 lb VOC/gal) of coating (12 percent solvent) to achieve an emission reduction equivalent to Regulatory Alternative III (93 percent control). A plant that is currently using a lower solvent coating (0.32 kg VOC/ℓ [2.64 lb VOC/gal] of coating) would have to switch to a coating containing 0.04 kg VOC/ℓ (0.30 lb VOC/gal) of coating (4 percent solvent) to obtain the same emission reduction. In other words, the second plant, which is already using a low-solvent coating, would have to switch to a far lower solvent content coating than the first plant. Because of this differential impact, the use of low-solvent coatings was not considered as an option to the regulatory alternatives.

6.3 REFERENCES FOR CHAPTER 6

1. Memorandum from Thorneloe, S., MRI, to Elastomeric Coating of Fabric Project File. May 9, 1984. Typical process parameters for elastomeric coating of fabrics; facilities using VOC control devices.

2. Memorandum from Maurer, E., MRI, to Elastomeric Coating of Fabrics Project File. April 12, 1984. Estimated solvent consumption at facilities performing elastomeric coating of fabrics.

3. Memorandum from Maurer, E., MRI, to Elastomeric Coating of Fabric Project File. April 23, 1984. Coating operation equipment design and operating parameters.

4. Memorandum from Friedman, E., MRI, to Polymeric Coating of Supporting Substrates Project File. July 27, 1984. Information on mix room equipment.

5. Memorandum from Hester, C., MRI, to Crumpler, D., EPA. February 17, 1984. Preliminary Section 9.1--Industry characterization.

6. Memorandum from Maurer, E., MRI, to Elastomeric Coating of Fabric Project File. April 12, 1984. Estimated solvent consumption at facilities performing elastomeric coating of fabrics.

7. Telecon. Friedman, E., MRI, with Coffey, F., Southern Tank and Pump Company. August 23, 1984. Information on solvent storage tanks.

8. VOC Emissions From Volatile Organic Liquid Storage Tanks--Background Information for Proposed Standards. Draft. U. S. Environmental Protection Agency. Research Triangle Park, North Carolina. Report No. EPA-450/3-81-003a. July 1984. pp. 3-25 to 3-26.

9. Telecon. Friedman, E., MRI, with Herman, K., Sherman Machinery. August 29, 1984. Information on coating preparation equipment.

10. Memorandum from Thorneloe, S., MRI, to Polymeric Coating of Supporting Webs Project File. October 26, 1984. Summary of information on polymeric coatings used in the coating of supporting substrates.

11. Memorandum from Friedman, E., MRI, to Polymeric Coating of Supporting Substrates Project File. September 18, 1984. Product specific raw material costs for model coating lines.

12. Memorandum from Banker, L., MRI, to Polymeric Coating of Supporting Substrates Project File. November 20, 1984. Calculation of drying oven ventilation rates for model coating lines.

13. Flexible Vinyl Coating and Printing Operations--Background Information for Proposed Standards. Draft. U. S. Environmental Protection Agency. Research Triangle Park, North Carolina. Report No. EPA/450/3-81-016a. January 1983. p. 6-6.

14. Telecon. Thorneloe, S., MRI, with Memering, L., United Air Specialists, Inc. May 4, 1984. Information on the Kon-den-Solver® condensation system.

7. ENVIRONMENTAL AND ENERGY IMPACTS

This chapter presents an analysis of the environmental and energy impacts of the regulatory alternatives for model solvent storage tanks, coating mix preparation equipment, and coating operations. The incremental increase or decrease in air pollution, water pollution, solid waste generation, and energy consumption for the regulatory alternatives compared to baseline are discussed.

Separate regulatory alternatives have been developed for solvent storage tanks, coating mix preparation equipment, and coating operations. The regulatory alternatives used in the impact analyses for model solvent storage tanks and coating mix preparation equipment are summarized in Tables 6-6 and 6-7, respectively. The regulatory alternatives used in the impact analyses for model polymeric coating operations are summarized in Table 6-8.

7.1 AIR POLLUTION IMPACTS

Volatile organic compounds (VOC's) are emitted from several points in the polymeric coating of supporting substrates. The largest single source of VOC emissions is the drying oven used to evaporate the solvent and cure the coating. Fugitive VOC emissions are emitted from around the coating application/flashoff area. Volatile organic compound emissions also occur during coating preparation activities, solvent storage, and cleanup of the coater and ancillary equipment. Some solvent (0 to 20 percent of solvent applied, below 5 percent on an average) may be retained in the product depending on the product type and specification. In an uncontrolled line, the entire amount of solvent used is vented to the atmosphere. The VOC emissions can be controlled by use of add-on control equipment such as carbon adsorbers, incinerators, and condensers. Carbon

adsorber and condenser control systems recover solvent for reuse in coating mix formulations.

7.1.1 Primary Air Pollution Impacts

The annual VOC emission levels associated with the application of each regulatory alternative for model solvent storage tanks and coating mix preparation equipment are presented in Tables 7-1 and 7-2, respectively. The annual VOC emission levels associated with the application of each regulatory alternative for model coating operations are presented in Table 7-3. The annual emissions were calculated using the model solvent storage tanks, coating mix preparation equipment, and coating operation parameters given in Chapter 6. The range in annual uncontrolled emissions are as follows:

1. Model solvent storage tanks--0.06 to 0.27 Megagrams (Mg) (0.07 to 0.30 tons);

2. Model coating mix preparation equipment--9.5 to 30.8 Mg (10.5 to 34 tons); and

3. Model coating operation--85.7 to 308.4 Mg (94.5 to 340 tons).

The range in annual VOC emissions are as follows for Regulatory Alternatives II, III, and IV for model solvent storage tanks, II and III for coating mix preparation equipment, and II, III, and IV for model coating operations:

1. Model solvent storage tanks--0.002 to 0.08 Mg (0.002 to 0.09 tons);

2. Model coating mix preparation equipment--0.5 to 19 Mg (0.5 to 20 tons); and

3. Model coating operation--3.4 to 31 Mg (3.8 to 34 tons).

The annual VOC emission incremental reduction beyond baseline for model solvent storage tanks, coating mix preparation equipment, and coating operations are given in Tables 7-1, 7-2, and 7-3, respectively.

The primary impact of a VOC emission reduction in this industry is a potential decline in ambient VOC levels and, thus, a reduction in subsequent ozone and photochemical smog formation. For plants in rural areas or areas of low ambient nitrogen oxide and ozone concentrations, the primary environmental impact is the prevention of transport of VOC's in the atmosphere to locations where ozone and photochemical smog are problems.

7.1.2 Secondary Air Pollution Impacts

Secondary emissions of air pollutants result from generation of the energy required to operate the control devices. Electrical energy is needed primarily to operate the motors and fans used to capture and convey gases to different sections of the control system. Generation of the electric power required to operate carbon adsorbers, incinerators, and condensers will result in particulate matter (PM), sulfur oxide (SO_x), nitrogen oxide (NO_x), and carbon monoxide (CO) emissions. The combustion of natural gas in incinerators will result in PM, NO_x, and CO emissions. The combustion of fuel oil in the boiler used to produce steam for the fixed-bed carbon adsorption system will also result in PM, SO_x, NO_x, and CO emissions.

Secondary emissions were calculated assuming that electric power to the control device was supplied by a coal-fired power plant. The thermal efficiency of the electric generator was assumed to be 33 percent. Also for this analysis it was assumed that for all types of power plants and all ages of plants, the estimated emissions per British thermal unit (Btu) of heat input in 1990 are approximately equal to the current new source performance standards (NSPS) for coal-fired power plants.[1] Therefore, the secondary emissions were calculated using the NSPS values.[2] The applicable standards limit PM emissions to 15 kg/TJ* (0.03 lb/10 Btu) of heat input, SO_x emissions to 520 kg/TJ (1.20 lb/10^6 Btu) of heat input, and NO_x emissions to 260 kg/TJ (0.60 lb/10^6 Btu) of heat input.[3] There are no annual secondary pollutant emissions associated with Regulatory Alternatives I, II, and III for model solvent storage tanks and I and II for coating mix preparation equipment. The annual secondary pollutant emission levels associated with application of Regulatory Alternative IV for the model solvent storage tanks is negligible. The annual secondary pollutant emission levels associated with the application of Regulatory Alternative III for model coating mix preparation equipment and the annual secondary pollutant levels associated with each of the regulatory alternatives for the model coating operations are presented in Tables 7-4,

*TJ = Terajoules = 10^{12} joules.

7-5, and 7-6. Annual secondary emissions of PM for model coating operations range from 2.7 to 56 kilograms (kg) (5.9 to 124 pounds [lb]). The annual secondary SO_x emissions for model coating operations range from 107 to 2,260 kg (236 to 4,980 lb). The annual secondary NO_x emissions for model coating operations range from 54 to 1,130 kg (118 to 2,490 lb).

The combustion of natural gas as supplemental fuel in incinerator control devices results in secondary air pollutants. Assuming the incinerator generates pollutants at a rate comparable to that of an industrial process boiler, the secondary emissions were calculated using emission rates of 5 kg/TJ (0.011 lb/10^6 Btu) of heat input for particulates, 8 kg/TJ (0.019 lb/10^6 Btu) for CO, and 84 kg/TJ (0.194 lb/10^6 Btu) for NO_x.[4] The annual secondary emissions for Regulatory Alternative IV for each model coating operation are presented in Table 7-7.

The major secondary air pollution impacts for fixed-bed carbon adsorption systems are the emissions from the boiler used to produce steam. The steam is used to strip the carbon bed of adsorbed VOC's at a ratio of 4 kilograms of steam per kilogram (4 lb steam/lb) of recovered solvent. Assuming that the boiler uses fuel oil containing 1.5 percent sulfur by weight and that the thermal efficiency of the boiler is 80 percent, estimates can be made of the levels of secondary emissions. For particulates, the emission rate is 50 kg/TJ (0.12 lb/10^6 Btu) of heat input; for SO_x, it is 690 kg/TJ (1.6 lb/10^6 Btu); for NO_x, it is 170 kg/TJ (0.4 lb/10^6 Btu); and for CO, it is 14.5 kg/TJ (0.034 lb/10^6 Btu).[5] The secondary emissions for those regulatory alternatives that require the generation of steam are presented in Tables 7-8 through 7-11. Annual emissions of PM for model coating operations range from 51 to 275 kg (111 to 606 lb). Annual emissions of SO_x for model coating operations range from 661 to 3,598 kg (1,458 to 7,930 lb). Annual emissions of NO_x for model coating operations range from 169 to 917 kg (371 to 2,020 lb). Annual emissions of CO for model coating operations range from 14 to 76 kg (31 to 168 lb).

The magnitude of the secondary pollutants generated by the operation of the control system is much smaller than the magnitude of solvent emissions being recovered. For the worst case, the largest amount of secondary emissions result from the application of Regulatory

Alternative III for the control (by a carbon adsorber) of a urethane coating line (line designation C). Emissions of VOC are reduced from 308 to 22 Mg (340 to 24 tons) annually while 4.3 Mg (4.7 tons) of secondary pollutants are emitted annually.

7.2 WATER POLLUTION IMPACTS

There are no wastewater effluents from an uncontrolled polymeric coating line or from the use of incinerators and condensation systems using a nitrogen atmosphere. There are some wastewater effluents from the use of fixed- and fluidized-bed carbon adsorbers and condensation systems using an air atmosphere. The amount of this wastewater discharge depends on the amount of water vapor in the solvent laden air, solubility of solvent in water, and whether or not the mixture is distilled. For this analysis, this amount is assumed to be negligible for fluidized-bed carbon adsorber and condensation systems using an air atmosphere.

Wastewater problems do arise from the use of fixed-bed carbon adsorbers. In a fixed-bed carbon adsorption system, water is used to produce steam, which is then used to strip adsorbed solvent from the carbon beds. Upon completion of the stripping operation, the solvent-steam vapors are condensed and fed to a decanter where the water insoluble organic layer separates from the water and water soluble organic layer. Water soluble organics can be separated by distillation, but trace amounts of organics could remain in the aqueous discharge. The wastewater discharged after the solvent has been decanted poses a potential adverse environmental impact resulting from possible organic contamination of the water. Even if the solvent is considered immiscible in water, trace concentrations of solvent may become fixed in the water during the operation of the condensation stage.

7.2.1 Coating Operation Wastewater Emissions

The annual wastewater discharges associated with each model coating operation and regulatory alternative (for model coating mix preparation equipment and coating operations) requiring fixed-bed carbon adsorber control are presented in Tables 7-12 and 7-13. There are no annual wastewater discharges associated with regulatory alternatives for model solvent storage tanks. As shown, annual wastewater discharges range from

36 to 117 cubic meters (m^3) (9,600 to 31,000 gallons [gal]) for model coating mix preparation equipment and 278 to 1,170 m^3 (73,500 to 310,000 gal) for model coating operations.

The annual wastewater VOC emissions associated with each regulatory alternative are based on the solvent concentration of the wastewater discharge. The VOC concentration of the wastewater effluent is dependent on the requirements of solvent purification for each model coating operation line. Model coating operations 1 and 3 use a single solvent (toluene) that has a 0.05 percent miscibility in water. Therefore, the solvent does not require purification after decantation for reuse in the coating formulation.[6] The solvent concentration in the wastewater discharge for model coating operations 1 and 3 is, therefore, based on the solubility of toluene in water, which is 500 ppm.[7] Recovered solvent from model coating operation 2 requires a distillation system because more than one solvent is used. A distillation system will provide a solvent purity of 98 percent with 100 ppm in the water effluent. Recovered solvent from model coating operation 4 also requires a distillation system because acetone is used, which is completely miscible in water. A distillation system will provide a solvent purity of 99.9 percent with 10 ppm in the water effluent.[6]

The annual wastewater VOC emissions associated with each regulatory alternative for model coating mix preparation equipment and coating operations are presented in Tables 7-12 and 7-14, respectively. For model coating operations 1 and 3, which do not require solvent purification after decantation, the maximum organic load is 8.2 percent of the total air emissions shown in Table 7-3. For model coating operation 2, based on a solvent concentration of 100 ppm in the wastewater discharge, the maximum organic load is 1.7 percent of the total air emissions shown in Table 7-3. For model coating operation 4, based on a solvent concentration of 10 ppm in the wastewater discharge, the maximum organic load is 0.2 percent of the total air emissions shown in Table 7-3.

The potential impacts of the organics are further lessened because of the availability of an ample number of water pollution control technologies. These treatment technologies include recycling the condensate into the steam-generating stream, which could allow a 95 percent or

greater reduction of solvent discharge.[9] The effects of recycling on boiler life are undetermined. Other control options are aqueous-phase carbon adsorption, activated sludge treatment, and oxidation of the organics.[9]

A National Pollutant Discharge Elimination System (NPDES) permit is required for polymeric coating wastewaters that are discharged directly to a receiving stream. The NPDES permit authority establishes the requirements for each direct discharge. Wastewater from polymeric coating processes that is discharged to a publicly owned treatment works (POTW) must meet the requirements in 40 CFR Part 403, General Pretreatment Regulations, as well as any requirements established by the local POTW.

7.3 SOLID WASTE IMPACTS

7.3.1 Line Impacts

The only solid waste impacts from the add-on control systems result from the use of carbon adsorption units. The activated carbon in these units gradually degrades during normal operation. The efficiency of the carbon eventually drops to a level such that replacement is necessary, thereby creating a solid waste load. The average carbon life was estimated to be 5 years. The amount of waste generated annually for various size lines for each of the regulatory alternatives is presented in Table 7-15. Annual solid waste disposal impacts range from 36 to 284 kg (80 to 626 lb) for model coating operations. Three alternatives are available for handling the waste carbon material: (1) landfilling the carbon, (2) reactivating the carbon and reusing it in the adsorber, and (3) using the carbon as fuel. Landfilling is simple and efficient because the technology for the operation is considered common practice. No environmental problems would occur if the landfill site has been properly constructed. If the site is not secured by a lining of some type (either natural or artificial), possible soil leaching could occur. The leachate may contain traces of organics which have been left on the carbon as residues. Transmission of this leachate into ground and surface waters would represent a potential environmental impact.

The second and most common alternative for handling the waste carbon material does not create any significant amount of solid waste. Most of

the carbon is reactivated and reused in the carbon adsorber. Disposal of waste carbon represents only 5 to 10 percent of the carbon used. Disposal of this waste by landfilling poses minimal environmental problems provided the landfill site is properly constructed.

The third method involves selling the waste carbon as a fuel. The physical and chemical structure of the carbon in combination with the hydrocarbon residues make the waste a fuel product similar to other solid fuels such as coal. Potential users of this fuel include industrial and small utility boilers. Because activated carbon generally contains very little sulfur, furnace SO_x emissions resulting from combustion would be negligible. Particulates and NO_x emissions from the burning of activated carbon would be comparable to those of coal-fired operations. However, the use of this disposal method would be limited because of the small quantities of carbon generated by lines in this industry.

7.4 ENERGY IMPACTS

The air emission control equipment for polymeric coating utilizes two forms of energy: electrical energy and fossil fuel energy. Electrical energy is used in the carbon adsorber, incinerator, and condensation control systems. The electrical energy is required to operate fans, cooling tower pumps and fans, boiler support systems, and all control system instrumentation. Fuel oil is used in steam generation for fixed-bed carbon adsorption units, and natural gas is used for supplemental fuel in incineration units. Electrical energy and steam are also required for the distillation systems used to separate and purify recovered solvents from typical sized lines.

7.4.1 Electricity and Fossil Fuel Impacts.

The annual electricity consumption calculated for each model operation and regulatory alternative is presented in Table 7-16. Table 7-17 shows the annual natural gas demand for incinerators associated with Regulatory Alternative IV. Incinerators may use primary or secondary heat recovery to reduce energy consumption. A heat recovery factor of 35 percent was used in the energy analysis. Table 7-18 shows the annual steam demand for each model plant and regulatory alternative. The total annual energy demand for each regulatory alternative is presented in Table 7-19.

Comparison of the total energy demand of each regulatory alternative shows that energy consumption does not increase significantly with increased VOC control, except for regulatory alternatives requiring incinerators.

7.5 NATIONWIDE FIFTH-YEAR IMPACTS

Table 7-20 presents the fifth-year impacts at various regulatory alternatives. These impacts are based on the projection of 18 new coating lines being built by 1990. Table 7-21 presents the fifth-year impacts at various regulatory alternatives beyond baseline.

7.6 OTHER ENVIRONMENTAL IMPACTS

The impact of increased noise levels is not a significant problem with the emission control systems used at polymeric coating plants. No noticeable increases in noise levels occur as a result of increasingly stricter regulatory alternatives. Fans and motors present in the majority of the systems are responsible for the bulk of the noise in the control operations.

7.7 OTHER ENVIRONMENTAL CONCERNS

7.7.1 Irreversible and Irretrievable Commitment of Resources

As discussed in Section 7.4, the regulatory alternatives will result in an increase in the irreversible and irretrievable commitment of energy resources. However, this increased energy demand for pollution control by carbon adsorption systems, condensers, and incinerators is insignificant compared to the total line energy demand.

7.7.2 Environmental Impact of Delayed Standard

Because the water pollution and energy impacts are small, there is no significant benefit to be achieved from delaying the proposed standards. Furthermore, there does not appear to be any emerging emission control technology that achieves greater emission reduction or that achieves an emission reduction equal to that of the regulatory alternatives at a lower cost than those represented by the control devices considered here. Consequently, there are no benefits or advantages to delaying the proposed standards.

TABLE 7-1. ANNUAL AIR POLLUTION IMPACTS OF THE REGULATORY ALTERNATIVES AND VOC EMISSION REDUCTION BEYOND BASELINE FOR MODEL SOLVENT STORAGE TANKS

	Rubber-coated industrial fabric			Urethane-coated fabric		Rubber-coated cord		Epoxy-coated fiberglass	
	A	B	C	B	C	A	B	B	C
Emissions									
Reg. Alt. I, Unc.									
Mg	0.06	0.11	0.27	a	a	0.06	0.11	0.11	0.27
tons	0.07	0.12	0.30	a	a	0.07	0.12	0.12	0.30
Reg. Alt. II, Unc. x 0.3									
Mg	0.02	0.03	0.08	a	a	0.02	0.03	0.03	0.08
tons	0.02	0.04	0.09	a	a	0.02	0.04	0.04	0.09
Reg. Alt III, Unc. x 0.1									
Mg	0.01	0.01	0.03	a	a	0.01	0.01	0.01	0.03
tons	0.01	0.01	0.03	a	a	0.01	0.01	0.01	0.03
Reg. Alt. IV, Unc. x 0.05									
Mg	0.00	0.01	0.01	a	a	0.00	0.01	0.01	0.01
tons	0.00	0.01	0.02	a	a	0.00	0.01	0.01	0.02
Emission reduction vs. Reg. Alt. I[b]									
Reg. Alt. II									
Mg	0.04	0.08	0.19	a	a	0.04	0.08	0.08	0.19
tons	0.05	0.08	0.21	a	a	0.05	0.08	0.08	0.21

(continued)

TABLE 7-1. (continued)

	Rubber-coated industrial fabric			Urethane-coated fabric		Rubber-coated cord		Epoxy-coated fiberglass	
	A	B	C	B	C	A	B	B	C
Reg. Alt. III									
Mg	0.06	0.10	0.24	a	a	0.06	0.10	0.10	0.24
tons	0.06	0.11	0.27	a	a	0.06	0.11	0.11	0.27
Reg. Alt. IV									
Mg	0.06	0.10	0.26	a	a	0.06	0.10	0.10	0.26
tons	0.07	0.11	0.29	a	a	0.07	0.11	0.11	0.29

[a]Not applicable.
[b]Reg. Alt. I is baseline.

TABLE 7-2. ANNUAL AIR POLLUTION IMPACTS OF THE REGULATORY ALTERNATIVES AND VOC EMISSION REDUCTION BEYOND BASELINE FOR MODEL COATING MIX PREPARATION EQUIPMENT

	Rubber-coated industrial fabric			Urethane-coated fabric		Rubber-coated cord		Epoxy-coated fiberglass	
	A	B	C	B	C	A	B	B	C
Emissions									
Reg. Alt. I, Unc.									
Mg	9.5	15.4	30.8	a	a	9.5	15.4	15.4	30.8
tons	10.5	17.0	34.0	a	a	10.5	17.0	17.0	34.0
Reg. Alt. II, Unc. x 0.6									
Mg	5.7	9.3	18.5	a	a	5.7	9.3	9.3	18.5
tons	6.3	10.2	20.4	a	a	6.3	10.2	10.2	20.4
Reg. Alt III, Unc. x 0.05									
Mg	0.5	0.8	1.5	a	a	0.5	0.8	0.8	1.5
tons	0.5	0.9	1.7	a	a	0.5	0.9	0.9	1.7
Emission reduction vs. Reg. Alt. I[b]									
Reg. Alt. II									
Mg	3.8	6.2	12.3	a	a	3.8	6.2	6.2	12.3
tons	4.2	6.8	13.6	a	a	4.2	6.8	6.8	13.6
Reg. Alt. III									
Mg	9.0	14.6	29.3	a	a	9.0	14.6	14.6	29.3
tons	10.0	16.2	32.3	a	a	10.0	16.2	16.2	32.3

[a]Not applicable.
[b]Reg. Alt. I is baseline.

TABLE 7-3. ANNUAL AIR POLLUTION IMPACTS OF THE REGULATORY ALTERNATIVES AND VOC EMISSION REDUCTION BEYOND BASELINE FOR MODEL COATING OPERATIONS

	Rubber-coated industrial fabric			Urethane-coated fabric		Rubber-coated cord		Epoxy-coated fiberglass	
	A	B	C	B	C	A	B	B	C
Emissions									
Uncontrolled									
Mg	85.7	138.8	277.5	154.2	308.4	85.7	138.8	138.8	277.5
tons	94.5	153.0	306.0	170.0	340.0	94.5	153.0	153.0	306.0
Reg. Alt. I, Unc. x 0.19									
Mg	16.3	26.4	52.7	29.3	58.6	16.3	26.4	138.8[a]	277.5[a]
tons	18.0	29.1	58.1	32.3	64.6	18.0	29.1	153.0[a]	306.0[a]
Reg. Alt II, Unc. x 0.1									
Mg	8.6	13.9	27.8	15.4	30.8	8.6	13.9	13.9	27.8
tons	9.5	15.3	30.6	17.0	34.0	9.5	15.3	15.3	30.6
Reg. Alt. III, Unc. x 0.07									
Mg	6.0	9.7	19.4	10.8	21.6	6.0	9.7	9.7	19.4
tons	6.6	10.7	21.4	11.9	23.8	6.6	10.7	10.7	21.4
Reg. Alt. IV, Unc. x 0.04									
Mg	3.4	5.6	11.1	6.2	12.3	3.4	5.6	5.6	11.1
tons	3.8	6.1	12.2	6.8	13.6	3.8	6.1	6.1	12.2

(continued)

TABLE 7-3. (continued)

	Rubber-coated industrial fabric			Urethane-coated fabric		Rubber-coated cord		Epoxy-coated fiberglass	
	A	B	C	B	C	A	B	B	C
Emission reduction vs. Reg. Alt. I[b]									
Reg. Alt. II									
Mg	7.7	12.5	25.0	13.9	27.8	7.7	12.5	124.9	249.7
tons	8.5	13.8	27.5	15.3	30.6	8.5	13.8	137.7	275.4
Reg. Alt. III									
Mg	10.3	16.7	33.3	18.5	37.0	10.3	16.7	129.1	258.1
tons	11.3	18.4	36.7	20.4	40.8	11.3	18.4	142.3	284.6
Reg. Alt. IV									
Mg	12.9	20.8	41.6	23.1	46.3	12.9	20.8	133.2	266.4
tons	14.2	23.0	45.9	25.5	51.0	14.2	23.0	146.9	293.8

[a]Emissions are same as uncontrolled.
[b]Reg. Alt. I is baseline.

TABLE 7-4. ANNUAL SECONDARY AIR POLLUTION IMPACTS FOR PARTICULATE MATTER EMISSIONS FROM ELECTRICAL ENERGY GENERATION FOR THE CONTROL EQUIPMENT

	Rubber-coated industrial fabric			Urethane-coated fabric		Rubber-coated cord		Epoxy-coated fiberglass	
	A	B	C	B	C	A	B	B	C
Emissions									
Reg. Alt. III-CA[a] (Mix equipment)									
kg	0.2	0.2	0.3	b	b	0.2	0.2	0.2	0.3
lb	0.4	0.3	0.7	b	b	0.4	0.3	0.3	0.7
Coating operation									
Reg. Alt. I-CA									
kg	2.9	5.2	9.6	6.5	13.0	4.1	7.1	b	b
lb	6.5	11.5	21.1	14.4	28.7	9.0	15.7	b	b
Reg. Alt. I-Cond.[a]									
kg	28	56	56	56	56	28	56	b	b
lb	62	124	124	124	124	62	124	b	b
Reg. Alt. II-CA									
kg	2.9	5.2	9.6	6.5	13.0	4.1	7.1	5.6	8.1
lb	6.5	11.5	21.1	14.4	28.7	9.0	15.7	12.3	17.8
Reg. Alt. II-Cond.									
kg	28	56	56	56	56	28	56	56	56
lb	62	124	124	124	124	62	124	124	124

(continued)

TABLE 7-4. (continued)

	Rubber-coated industrial fabric			Urethane-coated fabric		Rubber-coated cord		Epoxy-coated fiberglass	
	A	B	C	B	C	A	B	B	C
Reg. Alt. III-CA									
kg	2.9	5.2	9.6	6.5	13.0	4.1	7.1	5.6	8.1
lb	6.5	11.5	21.1	14.4	28.7	9.0	15.7	12.3	17.8
Reg. Alt. III-Cond.									
kg	28	56	56	56	56	28	56	56	56
lb	62	124	124	124	124	62	124	124	124
Reg. Alt. IV-Inc.[a]									
kg	2.7	4.7	8.7	5.9	11.8	3.7	6.5	5.1	7.3
lb	5.9	10.4	19.1	13.1	26.1	8.2	14.3	11.2	16.2

[a]CA = carbon adsorber; Cond. = condensation-air refrigeration system; Inc. = incinerator.
[b]Not applicable.

TABLE 7-5. ANNUAL SECONDARY AIR POLLUTION IMPACTS FOR SULFUR OXIDE EMISSIONS FROM ELECTRICAL ENERGY GENERATION FOR THE CONTROL EQUIPMENT

	Rubber-coated industrial fabric			Urethane-coated fabric		Rubber-coated cord		Epoxy-coated fiberglass	
	A	B	C	B	C	A	B	B	C
Emissions									
Reg. Alt. III-CA[a] (Mix equipment)									
kg	8.1	6.1	12.5	b	b	8.1	6.1	6.1	12.5
lb	17.8	13.5	27.6	b	b	17.8	13.5	13.5	27.6
Coating operation									
Reg. Alt. I-CA									
kg	117	208	383	261	521	163	285	b	b
lb	258	458	844	575	1,149	360	629	b	b
Reg.Alt. I-Cond.[a]									
kg	1,127	2,254	2,254	2,254	2,254	1,127	2,254	b	b
lb	2,484	4,967	4,967	4,967	4,967	2,484	4,967	b	b
Reg. Alt. II-CA									
kg	117	208	383	261	521	163	285	223	323
lb	258	458	844	575	1,149	360	629	491	713
Reg. Alt. II-Cond.									
kg	1,127	2,254	2,254	2,254	2,254	1,127	2,254	2,254	2,254
lb	2,484	4,967	4,967	4,967	4,967	2,484	4,967	4,967	4,967

(continued)

TABLE 7-5. (continued)

	Rubber-coated industrial fabric			Urethane-coated fabric		Rubber-coated cord		Epoxy-coated fiberglass	
	A	B	C	B	C	A	B	B	C
Reg. Alt. III-CA									
kg	117	208	383	261	521	163	285	223	323
lb	258	458	844	575	1,149	360	629	491	713
Reg. Alt. III-Cond.									
kg	1,127	2,254	2,254	2,254	2,254	1,127	2,254	2,254	2,254
lb	2,484	4,967	4,967	4,967	4,967	2,484	4,967	4,967	4,967
Reg. Alt. IV-Inc.[a]									
kg	107	188	346	238	474	148	259	203	294
lb	236	415	764	524	1,044	327	571	447	647

[a]CA = carbon adsorber; Cond. = condensation-air refrigeration system; Inc. = incinerator.
[b]Not applicable.

TABLE 7-6. ANNUAL SECONDARY AIR POLLUTION IMPACTS FOR NITROGEN OXIDE EMISSIONS FROM ELECTRICAL ENERGY GENERATION FOR THE CONTROL EQUIPMENT

	Rubber-coated industrial fabric			Urethane-coated fabric		Rubber-coated cord		Epoxy-coated fiberglass	
	A	B	C	B	C	A	B	B	C
Emissions									
Reg. Alt. III-CA[a] (Mix equipment)									
kg	4.0	3.1	6.3	b	b	4.0	3.1	3.1	6.3
lb	8.9	6.7	13.8	b	b	8.9	6.7	6.7	13.8
Coating operation									
Reg. Alt. I-CA									
kg	59	104	191	130	261	82	143	b	b
lb	129	229	422	287	575	180	315	b	b
Reg. Alt. I-Cond.[a]									
kg	563	1,127	1,127	1,127	1,127	563	1,127	b	b
lb	1,242	2,484	2,484	2,484	2,484	1,242	2,484	b	b
Reg. Alt. II-CA									
kg	59	104	191	130	261	82	143	111	162
lb	129	229	422	287	575	180	315	245	356
Reg. Alt. II-Cond.									
kg	563	1,127	1,127	1,127	1,127	563	1,127	1,127	1,127
lb	1,242	2,484	2,484	2,484	2,484	1,242	2,484	2,484	2,484

(continued)

TABLE 7-6. (continued)

	Rubber-coated industrial fabric			Urethane-coated fabric		Rubber-coated cord		Epoxy-coated fiberglass	
	A	B	C	B	C	A	B	B	C
Reg. Alt. III-CA									
kg	59	104	191	130	261	82	143	111	162
lb	129	229	422	287	575	180	315	245	356
Reg. Alt. III-Cond.									
kg	563	1,127	1,127	1,127	1,127	563	1,127	1,127	1,127
lb	1,242	2,484	2,484	2,484	2,484	1,242	2,484	2,484	2,484
Reg. Alt. IV-Inc.[a]									
kg	54	94	173	119	237	74	130	101	147
lb	118	207	382	262	522	164	285	224	324

[a]CA = carbon adsorber; Cond. = condensation-air refrigeration system; Inc. = incinerator.
[b]Not applicable.

TABLE 7-7. ANNUAL SECONDARY AIR POLLUTION IMPACTS FROM THE COMBUSTION OF NATURAL GAS FOR THE CONTROL EQUIPMENT

	Rubber-coated industrial fabric			Urethane-coated fabric		Rubber-coated cord		Epoxy-coated fiberglass	
	A	B	C	B	C	A	B	B	C
Emissions									
Reg. Alt. IV-Inc.[a]									
Particulate matter									
kg	20	35	65	32	64	16	29	34	49
lb	44	77	143	71	142	36	63	75	108
Carbon monoxide									
kg	34	60	110	55	109	28	49	58	84
lb	75	132	243	120	241	61	108	127	184
Nitrogen oxide									
kg	350	615	1,135	562	1,124	286	503	593	860
lb	772	1,356	2,502	1,238	2,477	631	1,108	1,307	1,895

[a]Inc. = incinerator.

TABLE 7-8. ANNUAL SECONDARY AIR POLLUTION IMPACTS FOR PARTICULATE MATTER EMISSIONS FROM STEAM GENERATION FOR THE CONTROL EQUIPMENT

	Rubber-coated industrial fabric			Urethane-coated fabric		Rubber-coated cord		Epoxy-coated fiberglass	
	A	B	C	B	C	A	B	B	C
Emissions									
Reg. Alt. III-CA[a] (mix equipment)									
kg	7	11	21	b	b	7	11	11	21
lb	15	24	47	b	b	15	24	24	47
Coating operation									
Reg. Alt. I-CA									
kg	51	82	164	127	255	51	82	b	b
lb	111	181	361	280	562	111	181	b	b
Reg. Alt. II-CA									
kg	56	91	182	137	275	56	91	136	271
lb	124	201	401	302	606	124	201	299	598
Reg. Alt. III-CA									
kg	58	94	188	123	245	58	94	116	233
lb	128	207	415	270	541	128	207	257	513

[a]CA = carbon adsorber.
[b]Not applicable.

TABLE 7-9. ANNUAL SECONDARY AIR POLLUTION IMPACTS FOR SULFUR OXIDE EMISSIONS FROM STEAM GENERATION FOR THE CONTROL EQUIPMENT

	Rubber-coated industrial fabric			Urethane-coated fabric		Rubber-coated cord		Epoxy-coated fiberglass	
	A	B	C	B	C	A	B	B	C
Emissions									
Reg. Alt. III-CA[a] (mix equipment)									
kg	86	140	280	b	b	86	140	140	280
lb	190	308	617	b	b	190	308	308	617
Coating operation									
Reg. Alt. I-CA									
kg	661	1,072	2,145	1,663	3,334	661	1,072	b	b
lb	1,458	2,363	4,728	3,665	7,347	1,458	2,363	b	b
Reg. Alt. II-CA									
kg	736	1,191	2,382	1,794	3,598	736	1,191	1,775	3,551
lb	1,622	2,625	5,251	3,955	7,930	1,622	2,625	3,913	7,826
Reg. Alt. III-CA									
kg	760	1,230	2,461	1,605	3,211	760	1,230	1,523	3,046
lb	1,676	2,711	5,425	3,539	7,077	1,676	2,711	3,356	6,713

[a]CA = carbon adsorber.
[b]Not applicable.

TABLE 7-10. ANNUAL SECONDARY AIR POLLUTION IMPACTS FOR NITROGEN OXIDE EMISSIONS FROM STEAM GENERATION FOR THE CONTROL EQUIPMENT

	Rubber-coated industrial fabric			Urethane-coated fabric		Rubber-coated cord		Epoxy-coated fiberglass	
	A	B	C	B	C	A	B	B	C
Emissions									
Reg. Alt. III-CA[a] (mix equipment)									
kg	22	36	71	b	b	22	36	36	71
lb	48	79	157	b	b	48	79	79	157
Coating operation									
Reg. Alt. I-CA									
kg	169	273	547	424	849	169	273	b	b
lb	371	602	1,205	934	1,872	371	602	b	b
Reg. Alt. II-CA									
kg	188	303	607	457	917	188	303	452	905
lb	413	669	1,338	1,008	2,020	413	669	997	1,994
Reg. Alt. III-CA									
kg	194	313	627	409	818	194	313	388	776
lb	427	691	1,382	902	1,803	427	691	855	1,710

[a]CA = carbon adsorber.
[b]Not applicable.

TABLE 7-11. ANNUAL SECONDARY AIR POLLUTION IMPACTS FOR CARBON MONOXIDE EMISSIONS FROM STEAM GENERATION FOR THE CONTROL EQUIPMENT

	Rubber-coated industrial fabric			Urethane-coated fabric		Rubber-coated cord		Epoxy-coated fiberglass	
	A	B	C	B	C	A	B	B	C
Emissions									
Reg. Alt. III-CA[a] (mix equipment)									
kg	2	3	6	b	b	2	3	3	6
lb	4	7	13	b	b	4	7	7	13
Coating operation									
Reg. Alt. I-CA									
kg	14	23	46	35	71	14	23	b	b
lb	31	50	100	78	156	31	50	b	b
Reg. Alt. II-CA									
kg	16	25	51	38	76	16	25	38	75
lb	34	56	111	84	168	34	56	83	166
Reg. Alt. III-CA									
kg	16	26	52	34	68	16	26	32	65
lb	36	58	115	75	150	36	58	71	143

[a]CA = carbon adsorber.
[b]Not applicable.

TABLE 7-12. ANNUAL WASTEWATER DISCHARGES AND WASTEWATER VOC EMISSIONS FROM THE FIXED-BED CARBON ADSORBER CONTROL OF MODEL COATING MIX PREPARATION EQUIPMENT[8]

Model coating line	Regulatory Alternative III			
	Wastewater discharge		Wastewater VOC emissions	
	m^3	10^3 gal	kg	lb
1. Rubber-coated industrial fabric				
Line designation:				
A	36	9.6	16	35
B	59	15.5	25	56
C	117	31.0	51	112
2. Urethane-coated fabric				
Line designation:				
B	a	a	a	a
C	a	a	a	a
3. Rubber-coated cord				
Line designation:				
A	36	9.6	16	35
B	59	15.5	25	56
4. Epoxy-coated fiberglass				
Line designation:				
B	59	15.5	0.4	1.0
C	117	31.0	0.9	2.0

[a]Not applicable.

TABLE 7-13. ANNUAL WASTEWATER DISCHARGES FROM THE FIXED-BED CARBON ADSORBER CONTROL OF MODEL COATING OPERATIONS[8]

Model coating line	Wastewater discharges					
	Regulatory Alternative I		Regulatory Alternative II		Regulatory Alternative III	
	m^3	10^3 gal	m^3	10^3 gal	m^3	10^3 gal
1. Rubber-coated industrial fabric						
Line designation:						
A	278	73.5	309	81.6	326	86.2
B	450	119	499	132	530	140
C	900	238	999	264	1,060	279
2. Urethane-coated fabric						
Line designation:						
B	499	132	556	147	586	155
C	999	264	1,110	294	1,170	310
3. Rubber-coated cord						
Line designation:						
A	278	73.5	309	81.6	326	86.2
B	450	119	499	132	530	140
4. Epoxy-coated fiberglass						
Line designation:						
B	a	a	499	132	530	140
C	a	a	999	264	1,060	279

[a]Not applicable.

TABLE 7-14. ANNUAL WASTEWATER VOC EMISSIONS FROM THE FIXED-BED CARBON ADSORBER CONTROL OF MODEL COATING OPERATIONS[8]

Model coating line	Wastewater VOC emissions					
	Regulatory Alternative I		Regulatory Alternative II		Regulatory Alternative III	
	kg	lb	kg	lb	kg	lb
1. Rubber-coated industrial fabric						
Line designation:						
A	120	265	133	294	141	310
B	194	428	216	475	229	504
C	389	857	431	950	454	1,000
2. Urethane-coated fabric						
Line designation:						
B	46	101	51	112	54	118
C	91	201	102	224	107	236
3. Rubber-coated cord						
Line designation:						
A	120	265	234	294	141	310
B	194	428	216	475	229	504
4. Epoxy-coated fiberglass						
Line designation:						
B	a	a	4.0	8.7	4.2	9.2
C	a	a	7.7	17	8.2	18

[a]Not applicable.

TABLE 7-15. ANNUAL SOLID WASTE IMPACTS OF THE REGULATORY ALTERNATIVES ON THE[a] MODEL COATING MIX PREPARATION EQUIPMENT AND COATING OPERATIONS

Model coating line	Regulatory alternatives							
	III[b]-CA[c]		I-CA		II-CA		III-CA	
	kg	lb	kg	lb	kg	lb	kg	lb
1. Rubber-coated industrial fabric								
Line designation:								
A	5	12	49	108	52	115	55	121
B	5	10	39	87	42	93	44	97
C	9	20	80	176	84	185	88	195
2. Urethane-coated fabric								
Line designation:								
B	d	d	36	80	39	85	40	89
C	d	d	74	163	77	171	112	248
3. Rubber-coated cord								
Line designation:								
A	5	12	49	108	52	115	55	121
B	5	10	39	87	42	93	44	97
4. Epoxy-coated fiberglass								
Line designation:								
B	14	31	d	d	134	297	116	256
C	28	61	d	d	269	593	284	626

[a]The solid waste impacts are based on an expected carbon life of 5 years and the assumption that 75 percent of the waste carbon is recycled.
[b]This regulatory alternative applies to model coating preparation equipment.
[c]CA = carbon adsorber.
[d]Not applicable.

TABLE 7-16. ANNUAL ELECTRICAL ENERGY REQUIREMENTS FOR THE CONTROL EQUIPMENT OF MODEL COATING MIX PREPARATION EQUIPMENT AND COATING OPERATIONS

	Rubber-coated industrial fabric			Urethane-coated fabric		Rubber-coated cord		Epoxy-coated fiberglass	
	A	B	C	B	C	A	B	B	C
Energy requirement									
Reg. Alt. III-CA[a] (Mix equipment)									
GJ	5.1	3.9	8.0	b	b	5.1	3.9	3.9	8.0
Million Btu	4.9	3.7	7.6	b	b	4.9	3.7	3.7	7.6
Coating operation									
Reg. Alt. I-CA									
GJ	75	133	244	167	333	104	183	b	b
Million Btu	71	126	232	158	316	99	173	b	b
Reg. Alt. I-Cond.[a]									
GJ	721	1,441	1,441	1,441	1,441	721	1,441	b	b
Million Btu	683	1,366	1,366	1,366	1,366	683	1,366	b	b
Reg. Alt. II-CA									
GJ	75	133	244	167	333	104	183	42	207
Million Btu	71	126	232	158	316	99	173	135	196
Reg. Alt. II-Cond.									
GJ	721	1,441	1,441	1,441	1,441	721	1,441	1,441	1,441
Million Btu	683	1,366	1,366	1,366	1,366	683	1,366	1,366	1,366

(continued)

TABLE 7-16. (continued)

	Rubber-coated industrial fabric			Urethane-coated fabric		Rubber-coated cord		Epoxy-coated fiberglass	
	A	B	C	B	C	A	B	B	C
Reg. Alt. III-CA									
GJ	75	133	244	167	333	104	183	142	207
Million Btu	71	126	232	158	316	99	173	135	196
Reg. Alt. III-Cond.									
GJ	721	1,441	1,441	1,441	1,441	721	1,441	1,441	1,441
Million Btu	683	1,366	1,366	1,366	1,366	683	1,366	1,366	1,366
Reg. Alt. IV-Inc.[a]									
GJ	69	120	222	152	303	95	166	129	188
Million Btu	65	114	210	144	287	90	157	123	178

[a]CA = carbon adsorber; Cond. = condensation-air refrigeration system; Inc. = incinerator.
[b]Not applicable.

TABLE 7-17. ANNUAL NATURAL GAS REQUIREMENTS FOR THE INCINERATOR CONTROL OF MODEL COATING OPERATIONS

Model coating line	Regulatory Alternative IV	
	GJ	10^6 Btu
1. Rubber-coated industrial fabric		
Line designation:		
A	4,200	3,980
B	7,380	7,000
C	13,620	12,910
2. Urethane-coated fabric		
Line designation:		
B	6,740	6,390
C	13,484	12,780
3. Rubber-coated cord		
Line designation:		
A	3,440	3,260
B	6,030	5,720
4. Epoxy-coated fiberglass		
Line designation:		
B	7,120	6,750
C	10,320	9,780

TABLE 7-18. ANNUAL STEAM REQUIREMENTS FOR THE CONTROL EQUIPMENT FOR MODEL COATING MIX PREPARATION EQUIPMENT AND MODEL COATING OPERATIONS

	Rubber-coated industrial fabric			Urethane-coated fabric		Rubber-coated cord		Epoxy-coated fiberglass	
	A	B	C	B	C	A	B	B	C
Steam requirement									
Reg. Alt. III-CA[a] (Mix equipment)									
GJ	100	162	325	b	b	100	162	162	325
Million Btu	95	154	308	b	b	95	154	154	308
Coating operation									
Reg. Alt. I-CA									
GJ	768	1,244	2,491	1,931	3,871	768	1,244	b	b
Million Btu	728	1,180	2,361	1,830	3,669	728	1,180	b	b
Reg. Alt. II-CA									
GJ	855	1,383	2,767	2,084	4,178	855	1,383	2,062	4,123
Million Btu	810	1,311	2,622	1,975	3,960	810	1,311	1,954	3,908
Reg. Alt. III-CA									
GJ	883	1,429	2,858	1,864	3,729	883	1,429	1,768	3,536
Million Btu	837	1,354	2,709	1,767	3,534	837	1,354	1,676	3,352

[a]CA = carbon adsorber.
[b]Not applicable.

TABLE 7-19. TOTAL ANNUAL ENERGY DEMAND OF CONTROL EQUIPMENT FOR THE MODEL COATING MIX PREPARATION EQUIPMENT AND COATING OPERATIONS

	Rubber-coated industrial fabric			Urethane-coated fabric		Rubber-coated cord		Epoxy-coated fiberglass	
	A	B	C	B	C	A	B	B	C
Energy requirement									
Reg. Alt. III-CA[a] (Mix equipment)									
GJ	105	166	333	b	b	105	166	166	333
Million Btu	100	158	316	b	b	100	158	158	316
Coating operation									
Reg. Alt. I-CA									
GJ	843	1,377	2,735	2,097	4,204	872	1,427	b	b
Million Btu	799	1,305	2,592	1,988	3,985	827	1,353	b	b
Reg. Alt. I-Cond.[a]									
GJ	721	1,441	1,441	1,441	1,441	721	1,441	b	b
Million Btu	683	1,366	1,366	1,366	1,366	683	1,366	b	b
Reg. Alt. II-CA									
GJ	930	1,516	3,011	2,250	4,511	959	1,566	2,204	4,330
Million Btu	882	1,437	2,854	2,133	4,276	909	1,484	2,090	4,104
Reg. Alt. II-Cond.									
GJ	721	1,441	1,441	1,441	1,441	721	1,441	1,441	1,441
Million Btu	683	1,366	1,366	1,366	1,366	683	1,366	1,366	1,366

(continued)

TABLE 7-19. (continued)

	Rubber-coated industrial fabric			Urethane-coated fabric		Rubber-coated cord		Epoxy-coated fiberglass	
	A	B	C	B	C	A	B	B	C
Reg. Alt. III-CA									
GJ	959	1,562	3,103	2,031	4,062	988	1,612	1,910	3,743
Million Btu	909	1,480	2,941	1,925	3,850	936	1,528	1,811	3,547
Reg. Alt. III-Cond.									
GJ	721	1,441	1,441	1,441	1,441	721	1,441	1,441	1,441
Million Btu	683	1,366	1,366	1,366	1,366	683	1,366	1,366	1,366
Reg. Alt. IV-Inc.[a]									
GJ	4,269	7,502	13,843	6,894	13,787	3,531	6,196	7,246	10,503
Million Btu	4,047	7,110	13,121	6,534	13,068	3,347	5,872	6,868	9,955

[a]CA = carbon adsorber; Cond. = condensation-air refrigeration system; Inc. = incinerator.
[b]Not applicable.

TABLE 7-20. FIFTH-YEAR IMPACTS OF VARIOUS REGULATORY ALTERNATIVES FOR COATING LINES[a]

Reg. Alt.	Emissions							
	VOC		Wastewater		Solid waste		Energy	
	Mg	tons	m^3	10^3 gal	kg	lb	TJ	10^9 Btu
Storage tanks								
I	2.0	2.2	0	0	0	0	0	0
II	0.6	0.66	0	0	0	0	0	0
III	0.2	0.22	0	0	0	0	0	0
IV	0.1	0.11	0	0	0	0	0	0
Coating mix preparation equipment								
I	254	280	0	0	0	0	0	0
II	152	168	0	0	0	0	0	0
III	13	14	967	255	141	311	2.7	2.6
Coating operation								
I	1,285	1,416	7,715	2,038	733	1,615	27.1	25.7
II	321	354	11,343	2,996	1,583	3,489	42.5	40.3
III	225	248	12,230	3,231	1,676	3,695	39.9	37.9
IV	128	142	0	0	0	0	147.4	139.8

[a]Coating line includes the storage tanks, coating mix preparation equipment, and coating operation.

TABLE 7-21. FIFTH-YEAR IMPACTS OF VARIOUS REGULATORY ALTERNATIVES OVER BASELINE FOR COATING LINES

	Emissions							
	VOC		Wastewater		Solid waste		Energy	
Reg. Alt.	Mg	tons	m^3	10^3 gal	kg	lb	TJ	10^9 Btu
Storage tanks								
II	-1.40	-1.54	0	0	0	0	0	0
III	-1.80	-1.98	0	0	0	0	0	0
IV	-1.90	-2.09	0	0	0	0	0	0
Coating mix preparation equipment								
II	-102	-112	0	0	0	0	0.0	0.0
III	-241	-266	967	255	141	311	2.7	2.6
Coating operation								
II	-964	-1,062	3,628	958	850	1,874	15.4	14.6
III	-1,060	-1,168	4,515	1,193	943	2,080	12.8	12.2
IV	-1,156	-1,275	-7,715	-2,038	-733	-1,615	120.3	114.1

7.8 REFERENCES FOR CHAPTER 7

1. The Final Set of Analysis of Alternative New Source Performance Standards for New Coal-Fired Power Plants. June 1979. ICF Inc., Washington, D.C. p. C-III-3C.

2. Memorandum from Thorneloe, S., MRI, to Polymeric Coating of Supporting Substrates Project File. October 22, 1984. Calculation of environmental and energy impacts.

3. Environmental Protection Agency General Regulations on Standards of Performance for New Stationary Sources. Code of Federal Regulations. Title 40, Chapter I, Subchapter C, Part 60, Subpart Da. July 1, 1979. Environmental Reporter. January 22, 1982. pp. 121:1518.11-121:1526.

4. Compilation of Air Pollution Emission Factors. 3rd Edition. U. S. Environmental Protection Agency. Research Triangle Park, North Carolina. Publication No. 999-AP-42. April 1981. pp. 1.4-1 - 1.4-3.

5. Reference 4. pp. 1.3-1 - 1.3-5.

6. Telecon, Thorneloe, S., MRI, with Schweitzer, P., Chempro. August 29 and 30, 1984. Information on solvent purification requirements for model coating lines.

7. Perry, R. and C. Chilton. Chemical Engineers' Handbook. Fifth Edition. McGraw-Hill Book Company. 1973. p. 3-43.

8. Memorandum from Thorneloe, S., MRI, to Polymeric Coating of Supporting Substrates Project File. October 24, 1984. Wastewater discharge and waterborne VOC emission calculations.

9. IT Enviroscience. Assessment of the Impact of Untreated Steam Condensate From Planned Vapor-Phase Carbon Adsorption Systems in Selected Industries. Prepared for U. S. Environmental Protection Agency. Research Triangle Park, North Carolina. Undated.

8. COSTS

This chapter presents the process and control costs for each of the model plants for new, modified, or reconstructed facilities. Emphasis is placed on the incremental control cost impacts of implementing the various regulatory alternatives presented in Chapter 6. Model plant design and operating parameters are also presented in Chapter 6. The costs presented in the following sections provide input for the economic impact analysis described in Chapter 9.

Capital and annualized costs are presented for an uncontrolled plant and for the pollution control devices for the various regulatory alternatives. All costs are reported in first quarter 1984 dollars.

8.1 COST ANALYSIS OF REGULATORY ALTERNATIVES

Regulatory alternatives were developed to represent various emission control levels that are achievable based on available emission control equipment. Model plants and lines were developed to evaluate the economic and environmental impacts to implement the regulatory alternatives. A model polymeric coating plant includes a single coating operation and associated solvent storage tanks and coating mix preparation equipment. A model coating operation is defined as the coating application/flashoff area and associated drying oven required to manufacture polymeric coated substrates. Four model coating operations were selected to characterize the manufacturing operations that are expected to be constructed, modified, or reconstructed in the near future. The solvent storage tanks for the model plants are those tanks required to store and supply solvents to the model coating mix preparation equipment. The coating mix preparation equipment for the model plant includes the preparation equipment (mixers and holding tanks) required to supply mixed coatings to the model coating operation.

The following sections of this chapter present the capital and annualized costs to construct, install, and operate model coating operations, storage tanks, and mix preparation equipment. Also, the installed capital cost, operating cost, annualized cost, and cost effectiveness to implement the emission control systems on which the regulatory alternatives are based are analyzed for each model plant. A discussion about the costs of modified or reconstructed facilities is also presented.

8.1.1 Capital and Annualized Costs of Model Plants

Table 8-1 presents the factors that are used to calculate the annualized costs. Tables 8-2 through 8-4 present the estimated capital and annualized costs for the uncontrolled model solvent storage tanks, coating mix preparation equipment, and coating operations. The installed capital costs presented in these tables are based on conversations with equipment vendors and include the cost of solvent storage tanks; mixers and holding tanks; and coating application equipment, associated drying oven, substrate unwinders and rewinders, and other ancillary equipment, respectively for the three model facilities.[1-4] Building and land costs were also included in the capital cost estimates for the model coating mix preparation equipment and coating operation.

The annualized costs for solvent storage tanks include maintenance and inspection costs, taxes, insurance, administration, and the annual capital charge. The annual capital charge is the cost associated with recovering the initial capital investment over the depreciable life of the equipment and is calculated by multiplying the total installed capital cost by the capital recovery factor. The capital recovery factor is based on the depreciable life of the equipment and a 10 percent interest rate.

The annualized costs for the coating mix preparation equipment and the coating operation are the sum of the annual operating and maintenance costs, plus the annual capital charge. The operating costs include operating labor, supervision, raw materials, utilities, and overhead. The land cost is not included in the capital recovery charge; it is multiplied by the interest rate to obtain the annual interest charge on the money invested in the land.

Tables 8-5 through 8-8 present the total installed capital and annualized costs for the control devices associated with Regulatory Alternatives II and III (Regulatory Alternative I is uncontrolled) for model solvent storage tanks and coating mix preparation equipment. The capital cost of the conservation vents for the solvent storage tanks and coating mix preparation equipment (Regulatory Alternative II) are based on vendor quotes.[5] The capital costs of the pressure relief valves (RA III) for the storage tanks are based on an engineering study performed to determine the capital and annualized costs of these valves. The capital cost of the carbon adsorber presented in Table 8-9 is the incremental cost that would be incurred because of the addition of solvents from coating mix preparation equipment control to the solvent emissions to be controlled from the coating operation. The ductwork costs are calculated based on information from the Richardson Engineering Manual.[6] "Saved" solvent credit (Tables 8-5, 8-6, and 8-8) is based on the current market price of the solvents that are prevented from being emitted to the atmosphere by use of conservation vents and pressure relief valves.[7] Similarly, the recovered solvent credit (Tables 8-7 and 8-9 through 8-15) is based on the current market price of the solvents that are recovered by the control device.

The capital and annualized costs for carbon adsorber control that achieves the levels of Regulatory Alteratives I through III for model coating operations are presented in Tables 8-10 through 8-12. The capital costs of the control device are based on information from model plant parameters and the Economic Analysis Branch (EAB) Control Cost manual.[8] The control device capital costs include costs for control device itself, as well as auxiliary equipment and indirect installation charges. Distillation system costs are included for model operations using solvent blend and water-soluble solvent (acetone). The annualized costs include the annual operating, maintenance, and capital recovery charges and are based on factors from the EAB Control Cost manual (Table 8-1). Again, the recovered solvent credit is the value of the solvents recovered by the control device.

The capital and annualized costs for condensation system control that achieves the levels of Regulatory Alternatives I through III for

model coating operations are presented in Tables 8-13 through 8-15. The capital cost of the control device is based on information provided by the equipment vendor for one particular case; then, a logarithmic relationship known as the six-tenths-factor rule is used to estimate the equipment costs given various model coating operation parameters.[9,10] The annualized costs are based on information from the equipment vendor and EAB Control Cost manual (Table 8-1). One advantage of using a condensation system is that a major portion of oven exhaust can be recirculated back to the oven after being cleaned of the solvents. This recirculated air is heated in a heat exchanger with the hot oven exhaust directed to the condensation system. Since this recirculated air is at a higher temperature than ambient air, reduction in heating requirements of the oven make-up air results, thereby reducing the energy costs.

The capital and annualized costs for incinerator control to achieve the level of Regulatory Alternative IV are presented in Table 8-16. The capital costs of the control device are based on information from model plant parameters and EAB Control Cost manual.[11] The capital costs include costs for incinerator, heat exchanger, fan or blower, damper controls, and instrumentation. Incinerator costs are based on design factors including operating temperature of 815°C (1500°F), residence time of 0.5 seconds, and 35 percent heat recovery.[11]

8.1.2 Cost Effectiveness

The cost-effectiveness value is the annual cost to control 1 Mg (ton) of VOC pollutant. The average cost-effectiveness value is the annualized cost per Mg (ton) of pollutant required to implement a control system achieving greater VOC reduction than that which is most commonly being used at present (baseline). The average cost effectiveness of an alternative was determined by dividing the incremental annualized control system cost by the incremental annual VOC reduction. The incremental annual cost is the difference in the net annualized cost of the alternative compared to baseline. The incremental VOC reduction is the difference in the VOC reduction of the alternative compared to baseline.

The incremental cost effectiveness is a measure of the additional annual cost required to achieve the next higher level of emission

reduction. The incremental cost effectiveness was calculated by dividing the incremental increase in the annual control device cost by the incremental emission reduction.

The average and incremental cost-effectiveness values for the various regulatory alternatives for model solvent storage tanks and mix preparation equipment are presented in Tables 8-17 and 8-18, respectively. The average and incremental cost-effectiveness values for various regulatory alternatives for model coating operations using carbon adsorber control for Alternatives I through III and incinerator control for Alternative IV are presented in Table 8-19, and using condensation system control for Alternatives I through III and incinerator control for Alternative IV are presented in Table 8-20.

As shown in Table 8-17, the incremental cost effectiveness ranges from $800/Mg ($730/ton) for conservation vent controlling emissions from a storage tank to $380,270/Mg ($344,900/ton) for a common carbon adsorber controlling emissions from storage tanks and model coating operations. Table 8-18 shows that the incremental cost effectiveness ranges from $-412/Mg ($-375/ton) for conservation vent controlling emissions from coating mix preparation equipment to $1,127/Mg ($1,023/ton) for a common adsorber controlling emissions from coating mix preparation equipment and model coating operations.

The incremental cost effectiveness for the model coating operations (Table 8-19) ranges from $-794/Mg ($-720/ton) for a carbon adsorber controlling emissions from a coating operation to $27,862/Mg ($25,271/ton) for an incinerator controlling emissions from a coating operation. The incremental cost effectiveness ranges from $-932/Mg ($-846/ton) for condensation system control to $37,886/Mg ($34,363/ton) for an incinerator controlling emissions from a coating operation (Table 8-20).

8.1.3 Modified/Reconstructed Facilities

Under the provisions of 40 CFR 60.14 and 60.15, an "existing facility" may become subject to standards of performance if it is deemed modified or reconstructed. In such situations, control devices may have to be installed for compliance with new source performance standards (NSPS).

The cost for installing a control system on an existing facility may be greater than the cost of installing the control system on a new facility. Because retrofit costs are highly site-specific, they are difficult to estimate. The availability of space and the configuration of existing equipment in the plant are the major limiting site-specific factors.

8.2 OTHER COST CONSIDERATIONS

In addition to costs associated with the Clean Air Act, the polymeric coating plants may also incur costs as a result of other Federal rules or regulations. These impacts are discussed in this section.

8.2.1 Costs Associated with Increased Water Pollution and Solid Waste Disposal

Wastewater disposal problems arise from the use of carbon adsorption solvent recovery systems. Dissolved solvents in the condensate from the carbon adsorber represent the primary potential water pollutant. Because of the distillation involved in the solvent recovery system (for model operations using solvent blend and water-soluble acetone), the aqueous bottoms contain from 70 to 5,500 ppm solvent, with a typical value of less than 500 ppm.[12] This wastewater is usually disposed of in a municipal sewer system following treatment in a stripper column in the distillation system. The actual amount of any surcharges would be determined by local regulations. In any event, it is unlikely that such charges would be significant.

Solid waste consists of the spent carbon used in carbon adsorption systems. The carbon from fixed-bed and fluidized-bed carbon adsorbers is usually sold back to processors, reactivated, and then sold again to the original purchaser or to other carbon adsorber operators; therefore, there are no solid waste disposal costs associated with these systems.

8.2.2 Resource Conservation and Recovery Act

The liquid solvent wastes generated by the air pollution control devices associated with the polymeric coating plants are classified as hazardous or toxic under the provisions of the Resource Conservation and

Recovery Act (RCRA). However, there are no liquid solvent wastes generated because all of the solvents that are recovered are reused.

8.2.3 Resource Requirements Imposed on State, Regional, and Local Agencies

The owner or operator of a polymeric coating plant is responsible for making application to the State for a permit to construct and subsequently to operate a new installation. The review of these applications and any later enforcement action would be handled by local, State, or regional regulatory agencies. It is expected that these plants will be distributed throughout the United States instead of clustered in one State and that they will be added primarily in States already having polymeric coating plants. Therefore, the promulgation of standards for polymeric coating plants should not impose major resource requirements on the regulatory agencies. Any costs incurred are not expected to limit the financial ability of these plants to comply with the proposed NSPS.

TABLE 8-1. BASIS FOR ESTIMATING ANNUALIZED COSTS--
NEW FACILITIES[13-15]
(First Quarter 1984 Dollars)

Cost element	Cost factor
Direct operating costs	
1. Utilities	
A. Electricity	$0.056/kWh
B. Steam	$7.96/$10^3$ lb
C. Cooling water	$0.13/$10^3$ gal
D. Natural gas	$3.13/Mcf
2. Operating labor	
A. Direct labor	$7.60/h
B. Supervision	15% of 2A
3. Maintenance	
A. Labor (hourly rate of 10% premium over operating labor)	$8.36/h
B. Material parts	100% of 3A
4. Replacement material	
A. Activated carbon	$1.35/lb
Indirect operating costs	
5. Overhead	80% of 2A+2B+3A
6. Capital charges	
A. Administrative	2% of capital cost
B. Property tax	1% of capital cost
C. Insurance	1% of capital cost
D. Capital recovery factor[a]	0.16275

[a]Based on 10 percent interest rate and an equipment life of 10 years.

TABLE 8-2. CAPITAL AND ANNUALIZED COSTS FOR SOLVENT STORAGE TANKS[1,8,16]
(First Quarter 1984 Dollars)

Cost item	Rubber-coated industrial fabric			Urethane-coated fabric		Rubber-coated cord		Epoxy-coated fiberglass	
	A	B	C	B	C	A	B	B	C
I. Capital costs									
1. Total installed costs:[a]	9,400	11,000	12,700	b	b	9,400	11,000	11,000	12,700
II. Direct operating costs									
1. Inspection and maintenance: (0.06)(I)	560	660	760	b	b	560	660	660	760
III. Indirect operating costs									
1. Taxes, insurance, administration: (0.04)(I)	380	440	510	b	b	380	440	440	510
2. Capital recovery charges: (0.11746)(I)[c]	1,100	1,290	1,490	b	b	1,100	1,290	1,290	1,490
3. Total indirect costs: (1 + 2)	1,480	1,730	2,000	b	b	1,480	1,730	1,730	2,000
IV. Total annualized costs (II + III)	2,040	2,390	2,760	b	b	2,040	2,390	2,390	2,760

[a]Based on vendor quote.
[b]Not applicable--coatings are bought premixed; no solvent storage tanks used.
[c]Based on 10 percent interest rate and an equipment life of 20 years.

TABLE 8-3. CAPITAL AND ANNUALIZED COSTS FOR COATING MIX PREPARATION EQUIPMENT[2,17] (First Quarter 1984 Dollars)

Cost item	Rubber-coated industrial fabric			Urethane-coated fabric		Rubber-coated cord		Epoxy-coated fiberglass	
	A	B	C	B	C	A	B	B	C
I. Capital costs									
1. Coating preparation equipment:[a]	19,200	24,300	48,550	b	b	14,150	19,200	48,500	97,950
2. Purchased equipment cost: (1.18)(1)	22,660	28,670	57,290	b	b	16,700	22,660	57,230	115,580
3. Equipment installed cost: (1.102)(2)	24,970	31,590	63,130	b	b	18,400	24,970	63,070	127,370
4. Building: (0.29)(2)	6,570	8,310	16,610	b	b	4,850	6,570	16,600	33,520
5. Land: (0.06)(2)	1,360	1,720	3,440	b	b	1,000	1,360	3,430	6,930
6. Total installed costs: (3 + 4 + 5)	32,900	41,620	83,180	b	b	24,250	32,900	83,100	167,820
II. Direct operating costs									
1. Labor:									
-Operator	7,600	15,200	15,200	b	b	7,600	15,200	15,200	15,200
-Supervisory	1,140	2,280	2,280	b	b	1,140	2,280	2,280	2,280
2. Maintenance:									
-Labor	8,360	16,720	16,720	b	b	8,360	16,720	16,720	16,720
-Parts	8,360	16,720	16,720	b	b	8,360	16,720	16,720	16,720
3. Utilities:									
-Electricity[a]	670	1,670	3,340	b	b	500	1,340	5,850	10,530
4. Total direct costs: (1 + 2 + 3)	26,130	52,590	54,260	b	b	25,960	52,260	56,770	61,450
III. Indirect operating costs									
1. Overhead:	13,680	27,360	27,360	b	b	13,680	27,360	27,360	27,360
2. Capital charges:[c]	5,100	6,460	12,900	b	b	3,760	5,100	12,890	26,030
3. Total indirect costs: (1 + 2)	18,780	33,820	40,260	b	b	17,440	32,460	40,250	53,390
IV. Total annualized costs (II + III)	44,910	86,410	94,520	b	b	43,400	84,720	97,020	114,840

[a]Based on industry and vendor data.

[b]Not applicable--coatings are bought premixed; no coating preparation tanks used.

[c]Administration, taxes, and capital recovery costs, equal to 15.746 percent of total installed equipment costs (excluding land costs). Land costs are included by multiplying total direct land costs by a 10 percent interest rate to estimate the annual interest charge on money invested in the land.

TABLE 8-4. CAPITAL AND ANNUALIZED COSTS FOR COATING OPERATIONS[3,4,18]
(First Quarter 1984 Dollars)

Cost item	Rubber-coated industrial fabric			Urethane-coated fabric		Rubber-coated cord		Epoxy-coated fiberglass	
	A	B	C	B	C	A	B	B	C
I. Capital costs									
1. Coating operation:[a]	389,000	389,000	389,000	501,000	501,000	615,000	615,000	397,000	397,000
2. Purchased equipment cost: (1.18)(1)	459,000	459,000	459,000	591,000	591,000	726,000	726,000	468,000	468,000
3. Equipment installed cost: (1.102)(2)	506,000	506,000	506,000	651,000	651,000	800,000	800,000	516,000	516,000
4. Building: (0.29)(2)	133,100	133,100	133,100	171,400	171,400	210,500	210,500	135,700	135,700
5. Land: (0.06)(2)	27,500	27,500	27,500	35,500	35,500	43,600	43,600	28,100	28,100
6. Total installed costs: (3 + 4 + 5)	666,600	666,600	666,600	857,900	857,900	1,054,100	1,054,100	679,800	679,800
II. Direct operating costs									
1. Labor:									
-Operator	45,600	91,200	91,200	121,600	121,600	30,400	60,800	121,600	121,600
-Supervisory	6,840	13,680	13,680	18,240	18,240	4,560	9,120	18,240	18,240
2. Raw materials:[a]									
-Substrate	295,640	478,620	957,250	4,764,400	9,534,600	579,400	937,840	2,268,200	4,536,300
-Coatings	268,140	434,100	868,200	566,300	1,133,300	51,950	84,100	1,932,000	3,864,000
3. Maintenance:									
-Labor	16,720	33,440	33,440	33,440	33,440	16,720	33,440	33,440	33,440
-Parts	16,720	33,440	33,440	33,440	33,440	16,720	33,440	33,440	33,440
4. Utilities:									
-Electricity[a]	210	420	420	1,920	1,920	1,380	2,760	1,090	1,090
-Natural gas	2,100	3,400	6,800	6,640	13,280	5,970	9,700	3,640	7,280
5. Total direct costs: (1 + 2 + 3 + 4)	651,970	1,088,300	2,004,430	5,545,980	10,889,820	707,100	1,171,200	4,411,650	8,615,390
III. Indirect operating costs									
1. Overhead:[b]	55,330	110,660	110,660	138,620	138,620	41,340	82,690	138,620	138,620
2. Capital charges:[c]	103,380	103,380	103,380	133,050	133,050	163,470	163,470	105,430	105,430
3. Total indirect costs: (1 + 2)	158,710	214,040	214,040	271,670	271,670	204,810	246,160	244,050	244,050
IV. Total annualized costs (II + III)	810,680	1,302,340	2,218,470	5,817,650	11,161,490	911,910	1,417,360	4,655,700	8,859,440

[a]Based on industry and vendor data.

[b]80 percent of the sum of operating, supervisory, and maintenance labor.

[c]Administration, taxes, and capital recovery costs, equal to 15.746 percent of total installed equipment costs (excluding land costs). Land costs are included by multiplying total direct land costs by a 10 percent interest rate to estimate the annual interest charge on money invested in the land.

TABLE 8-5. CAPITAL AND ANNUALIZED COSTS OF CONSERVATION VENTS FOR SOLVENT STORAGE TANKS[5,7] (First Quarter 1984 Dollars)

Cost item	Rubber-coated industrial fabric			Urethane-coated fabric		Rubber-coated cord		Epoxy-coated fiberglass	
	A	B	C	B	C	A	B	B	C
I. Capital costs									
1. Control device:[a]	700	700	700	b	b	700	700	700	700
2. Purchased equipment cost:[c] (1.18)(No. 1 above)	830	830	830	b	b	830	830	830	830
3. Total installed cost:[d] (1.50)(No. 2 above)	1,240	1,240	1,240	b	b	1,240	1,240	1,240	1,240
II. Direct operating costs									
1. Labor and maintenance:	0	0	0	b	b	0	0	0	0
2. Utilities:	0	0	0	b	b	0	0	0	0
III. Indirect operating costs									
1. Capital recovery charges: (20.275 percent of total installed cost)[e]	250	250	250	b	b	250	250	250	250
IV. Total annualized costs (II + III)	250	250	250	b	b	250	250	250	250
V. "Saved" solvent credit	17	29	72	b	b	17	29	39	97
VI. Net annualized costs (IV - V)	233	221	178	b	b	233	221	211	153

[a]Costs are for two conservation vents for two storage tanks at a price of $350/vent.
[b]Not applicable.
[c]Includes costs for instruments and controls, taxes, and freight.
[d]Includes installation direct and indirect costs.
[e]16.275 percent capital recovery factor based on 10-year life and 10 percent interest, plus 4 percent for taxes, insurance, and administration.

TABLE 8-6. CAPITAL AND ANNUALIZED COSTS OF PRESSURE RELIEF VALVES FOR SOLVENT STORAGE TANKS[7] (First Quarter 1984 Dollars)

Cost item	Rubber-coated industrial fabric			Urethane-coated fabric		Rubber-coated cord		Epoxy-coated fiberglass	
	A	B	C	B	C	A	B	B	C
I. Capital costs									
1. Control device:	0	0	0	a	a	0	0	0	0
2. Purchased equipment cost: (1.18)(No. 1 above)	0	0	0	a	a	0	0	0	0
3. Total installed cost: (1.50)(No. 2 above)	0	0	0	a	a	0	0	0	0
II. Direct operating costs									
1. Labor and maintenance:	0	0	0	a	a	0	0	0	0
2. Utilities:	0	0	0	a	a	0	0	0	0
III. Indirect operating costs									
1. Capital recovery charges: (20.275 percent of total installed cost)[b]	0	0	0	a	a	0	0	0	0
IV. Total annualized costs (II + III)	0	0	0	a	a	0	0	0	0
V. "Saved" solvent credit	22	37	92	a	a	22	37	50	124
VI. Net annualized costs (IV - V)	-22	-37	-92	a	a	-22	-37	-50	-124

[a]Not applicable.
[b]16.275 percent capital recovery factor based on 10-year life and 10 percent interest, plus 4 percent for taxes, insurance, and administration.

TABLE 8-7. CAPITAL AND ANNUALIZED COSTS FOR COMMON CARBON ADSORBER FOR CONTROL OF SOLVENT STORAGE TANKS[6,7] (First Quarter 1984 Dollars)

Cost item	Rubber-coated industrial fabric			Urethane-coated fabric		Rubber-coated cord		Epoxy-coated fiberglass	
	A	B	C	B	C	A	B	B	C
I. Capital costs									
1. Control device:[a]	--	--	--	b	b	--	--	--	--
2. Purchased equipment cost: (1.18)(No. 1 above)	--	--	--	b	b	--	--	--	--
3. Equipment installed cost: (1.61)(No. 2 above)	--	--	--	b	b	--	--	--	--
4. Ductwork installed cost:	17,000	17,000	17,000	b	b	17,000	17,000	17,000	17,000
5. Total installed cost: (3 + 4)	17,000	17,000	17,000	b	b	17,000	17,000	17,000	17,000
II. Direct operating costs									
1. Labor and maintenance:	0	0	0	b	b	0	0	0	0
2. Carbon replacement cost at 5-year life:	0	0	0	b	b	0	0	0	0
3. Utilities:									
-Electricity	0	0	0	b	b	0	0	0	0
-Steam	0	0	0	b	b	0	0	0	0
-Cooling water	0	0	0	b	b	0	0	0	0
4. Total direct costs: (1 + 2 + 3)	0	0	0	b	b	0	0	0	0
III. Indirect operating costs									
1. Capital recovery charges: (20.275 percent of total installed cost)[c]	3,450	3,450	3,450	b	b	3,450	3,450	3,450	3,450
IV. Total annualized costs (II + III)	3,450	3,450	3,450	b	b	3,450	3,450	3,450	3,450
V. Recovered solvent credit	23	39	97	b	b	23	39	53	131
VI. Net annualized costs (IV - V)	3,427	3,411	3,353	b	b	3,427	3,411	3,397	3,319

[a]No incremental cost in the carbon adsorber cost.
[b]Not applicable.
[c]16.275 percent capital recovery factor based on 10-year life and 10 percent interest, plus 4 percent for taxes, insurance, and administration.

TABLE 8-8. CAPITAL AND ANNUALIZED COSTS OF CONSERVATION VENTS FOR COATING MIX PREPARATION EQUIPMENT[5-7] (First Quarter 1984 Dollars)

Cost item	Rubber-coated industrial fabric			Urethane-coated fabric		Rubber-coated cord		Epoxy-coated fiberglass	
	A	B	C	B	C	A	B	B	C
I. Capital costs									
1. Control device:[a]	700	700	1,400	b	b	700	700	1,050	2,450
2. Purchased equipment cost:[c] (1.18)(No. 1 above)	830	830	1,660	b	b	830	830	1,240	2,890
3. Equipment installed cost:[d] (1.50)(No. 2 above)	1,240	1,240	2,480	b	b	1,240	1,240	1,860	4,340
4. Ductwork installed cost:	680	680	1,360	b	b	680	680	1,020	2,380
5. Total installed cost (3 + 4):	1,920	1,920	3,840	b	b	1,920	1,920	2,880	6,720
II. Direct operating costs									
1. Labor and maintenance:	0	0	0	b	b	0	0	0	0
2. Utilities:	0	0	0	b	b	0	0	0	0
III. Indirect operating costs									
1. Capital recovery charges: (20.275 percent of total installed cost)[e]	390	390	780	b	b	390	390	580	1,360
IV. Total annualized costs (II + III)	390	390	780	b	b	390	390	580	1,360
V. "Saved" solvent credit	1,430	2,310	4,620	b	b	1,430	2,310	3,130	6,260
VI. Net annualized costs (IV - V)[f]	-1,040	-1,920	-3,840	b	b	-1,040	-1,920	-2,550	-4,900

[a]Based on price of the conservation vents of $350/vent.
[b]Not applicable.
[c]Includes costs for instruments and controls, taxes, and freight.
[d]Includes installation direct and indirect costs.
[e]16.275 percent capital recovery factor based on a 10-year life and 10 percent interest, plus 4 percent for taxes, insurance, and administration.
[f]Negative value indicates a credit.

TABLE 8-9. CAPITAL AND ANNUALIZED COSTS FOR COMMON CARBON ADSORBER FOR CONTROL OF COATING MIX PREPARATION EQUIPMENT[6-8,19] (First Quarter 1984 Dollars)

Cost item	Rubber-coated industrial fabric			Urethane-coated fabric		Rubber-coated cord		Epoxy-coated fiberglass	
	A	B	C	B	C	A	B	B	C
I. Capital costs									
1. Control device:[a]	4,300	3,400	3,700	b	b	4,300	3,400	5,600	6,900
2. Purchased equipment cost:[c] (1.18)(No. 1 above)	5,100	4,000	4,400	b	b	5,100	4,000	6,600	8,100
3. Equipment installed cost:[d] (1.61)(No. 2 above)	8,200	6,500	7,000	b	b	8,200	6,500	10,600	13,100
4. Ductwork installed cost:	18,250	18,250	22,680	b	b	18,250	18,250	20,460	29,930
5. Total installed cost: (3 + 4)	26,450	24,750	29,680	b	b	26,450	24,750	31,060	43,030
II. Direct operating costs									
1. Operating and maintenance labor plus materials: (6 percent of total installed cost)	1,585	1,485	1,780	b	b	1,585	1,485	1,865	2,580
2. Carbon replacement cost at 5-year life:	65	55	110	b	b	65	55	165	330
3. Utilities:									
-Electricity	80	60	125	b	b	80	60	60	125
-Steam	635	1,030	2,060	b	b	635	1,030	1,030	2,060
-Cooling water	75	120	240	b	b	75	120	120	240
4. Total direct costs: (1 + 2 + 3)	2,440	2,750	4,315	b	b	2,440	2,750	3,240	5,335
III. Indirect operating costs									
1. Capital recovery charges: (22 percent of total installed cost)[e]	5,820	5,445	6,530	b	b	5,820	5,445	6,830	9,465
IV. Total annualized costs (II + III)	8,260	8,195	10,845	b	b	8,260	8,195	10,070	14,800
V. Recovered solvent credit	3,390	5,490	10,980	b	b	3,390	5,490	7,430	14,860
VI. Net annualized costs (IV - V)[f]	4,870	2,705	-135	b	b	4,870	2,705	2,640	0

[a] Incremental cost due to coating preparation equipment control.
[b] Not applicable.
[c] Includes costs for instruments and controls, taxes, and freight.
[d] Includes installation direct and indirect costs.
[e] 16.275 percent capital recovery factor based on 10-year life and 10 percent interest, plus 5.725 percent for taxes, insurance, administration, and overhead.
[f] Negative value indicates a credit.

TABLE 8-10. CAPITAL AND ANNUALIZED COSTS FOR CARBON ADSORBER CONTROL OF MODEL OPERATIONS--REGULATORY ALTERNATIVE I[6-8,19,20] (First Quarter 1984 Dollars)

Cost item	Rubber-coated industrial fabric			Urethane-coated fabric		Rubber-coated cord		Epoxy-coated fiberglass	
	A	B	C	B	C	A	B	B	C
I. Capital costs									
1. Control device:[a]	115,900	106,800	138,900	107,900	140,000	115,900	106,800	b	b
2. Purchased equipment cost:[c] (1.18)(No. 1 above)	136,800	126,000	163,900	127,300	165,300	136,800	126,000	b	b
3. Equipment installed cost:[d] (1.61)(No. 2 above)	220,300	202,800	263,900	205,000	266,100	220,300	202,800	b	b
4. Ductwork installed cost:	65,400	58,100	87,900	65,400	103,000	80,400	72,900	b	b
5. Distillation system installed cost:[e]	--[f]	--	--	79,000	119,000	--	--	b	b
6. Total installed cost: (3 + 4 + 5)	285,700	260,900	351,800	349,400	488,100	300,700	275,700	b	b
II. Direct operating costs									
1. Operating and maintenance labor plus materials: (6 percent of total installed cost)	17,140	15,660	21,110	20,970	29,290	18,040	16,540	b	b
2. Carbon replacement cost at 5-year life:	1,050	850	1,700	870	1,740	1,050	850	b	b
3. Utilities:									
-Electricity	1,170	2,060	3,800	2,590	5,180	1,620	2,840	b	b
-Steam	4,870	7,890	15,790	12,240	24,540	4,870	7,890	b	b
-Cooling water	600	950	1,900	1,340	2,670	600	950	b	b
4. Total direct costs: (1 + 2 + 3)	24,830	27,410	44,300	38,010	63,420	26,180	29,070	b	b
III. Indirect operating costs									
1. Capital recovery charges: (22 percent of total installed cost)[g]	62,850	57,410	77,390	76,870	107,370	66,150	60,660	b	b
IV. Total annualized costs (II + III)	87,680	84,820	121,690	114,880	170,790	92,330	89,730	b	b
V. Recovered solvent credit	26,010	42,130	84,290	122,150	244,390	26,010	42,130	b	b
VI. Net annualized costs (IV - V)[h]	61,670	42,690	37,400	-7,270	-73,600	66,320	47,600	b	b

[a]Includes costs for carbon adsorber, carbon, fans and blowers, controls, condenser, decanter, heat exchanger, etc. A 20 percent allowance was added to the major equipment purchase cost to compensate for unspecified items.

[b]Not applicable--no control device needed for Alternative I level for these model lines.

[c]Includes costs for instruments and controls, taxes, and freight.

[d]Includes installation direct and indirect costs.

[e]Based on vendor quote.

[f]Distillation system not needed for these model lines; therefore, no costs.

[g]16.275 percent capital recovery factor based on 10-year life and 10 percent interest, plus 5.725 percent for taxes, insurance, administration, and overhead.

[h]Negative value indicates a credit.

TABLE 8-11. CAPITAL AND ANNUALIZED COSTS FOR CARBON ADSORBER CONTROL OF MODEL OPERATIONS--REGULATORY ALTERNATIVE II[6-8,19,20]
(First Quarter 1984 Dollars)

Cost item	Rubber-coated industrial fabric			Urethane-coated fabric		Rubber-coated cord		Epoxy-coated fiberglass	
	A	B	C	B	C	A	B	B	C
I. Capital costs									
1. Control device:[a]	118,700	109,100	141,200	110,200	142,300	118,700	109,100	165,300	225,000
2. Purchased equipment cost:[b] (1.18)(No. 1 above)	140,100	128,700	166,600	130,000	168,000	140,100	128,700	195,100	265,500
3. Equipment installed cost:[c] (1.61)(No. 2 above)	225,500	207,200	268,200	209,400	270,400	225,500	207,200	314,000	427,400
4. Partial enclosure installed cost:[d]	5,700	5,700	5,700	5,700	5,700	5,700	5,700	5,700	5,700
5. Ductwork installed cost:	65,400	58,100	87,900	65,400	103,000	80,400	72,900	65,400	80,400
6. Distillation system installed cost:[e]	--[f]	--	--	79,000	119,000	--	--	118,000	179,000
7. Total installed cost: (3 + 4 + 5 + 6)	296,600	271,000	361,800	359,500	498,100	311,600	285,800	503,100	692,500
II. Direct operating costs									
1. Operating and maintenance labor plus materials: (6 percent of total installed cost)	17,800	16,260	21,710	21,570	29,890	18,700	17,150	30,190	41,550
2. Carbon replacement cost at 5-year life:	1,110	900	1,800	920	1,830	1,110	900	2,880	5,760
3. Utilities:									
-Electricity	1,170	2,060	3,800	2,590	5,180	1,620	2,840	2,210	3,210
-Steam	5,420	8,770	17,540	13,210	26,490	5,420	8,770	13,070	26,140
-Cooling water	650	1,050	2,100	1,490	2,870	650	1,050	1,520	3,040
4. Total direct costs: (1 + 2 + 3)	26,150	29,040	46,950	39,780	66,260	27,500	30,710	49,870	79,700
III. Indirect operating costs									
1. Capital recovery charges: (22 percent of total installed cost)[g]	65,250	59,620	79,600	79,080	109,600	68,550	62,870	110,690	152,360
IV. Total annualized costs (II + III)	91,400	88,660	126,550	118,860	175,860	96,050	93,580	160,560	232,060
V. Recovered solvent credit	28,930	46,820	93,640	135,780	271,480	28,930	46,820	63,340	126,680
VI. Net annualized costs (IV - V)[h]	62,470	41,840	32,910	-16,920	-95,620	67,120	46,760	97,220	105,380

[a]Includes costs for carbon adsorber, carbon, fans and blowers, controls, condenser, decanter, heat exchanger, etc. A 20 percent allowance was added to the major equipment purchase cost to compensate for unspecified items.
[b]Includes costs for instruments and controls, taxes, and freight.
[c]Includes installation direct and indirect costs.
[d]Installed cost of a capture device obtained from the NSPS development of magnetic tape coating, a similar surface coating operation.
[e]Based on vendor quote.
[f]Distillation system not needed for these model lines; therefore, no costs.
[g]16.275 percent capital recovery factor based on 10-year life and 10 percent interest, plus 5.725 percent for taxes, insurance, administration, and overhead.
[h]Negative value indicates a credit.

TABLE 8-12. CAPITAL AND ANNUALIZED COSTS FOR CARBON ADSORBER CONTROL OF MODEL OPERATIONS--REGULATORY ALTERNATIVE III[6-8,19,20] (First Quarter 1984 Dollars)

Cost item	Rubber-coated industrial fabric			Urethane-coated fabric		Rubber-coated cord		Epoxy-coated fiberglass	
	A	B	C	B	C	A	B	B	C
I. Capital costs									
1. Control device:[a]	120,500	110,800	142,900	111,400	143,700	120,500	110,800	167,600	229,600
2. Purchased equipment cost:[b] (1.18)(No. 1 above)	142,200	130,700	168,600	131,400	169,600	142,200	130,700	197,800	270,900
3. Equipment installed cost:[c] (1.61)(No. 2 above)	229,000	210,500	271,500	211,500	273,000	229,000	210,500	318,400	436,200
4. Total enclosure installed cost:[d]	15,000	15,000	15,000	15,000	15,000	15,000	15,000	15,000	15,000
5. Ductwork installed cost:	65,400	58,100	87,900	65,400	103,000	80,400	72,900	65,400	80,400
6. Distillation system installed cost:[e]	--[f]	--	--	79,000	119,000	--	--	118,000	179,000
7. Total installed cost: (3 + 4 + 5 + 6)	309,400	283,600	374,400	370,900	510,000	324,400	298,400	516,800	710,600
II. Direct operating costs									
1. Operating and maintenance labor plus materials: (6 percent of total installed cost)	18,560	17,020	22,460	22,260	30,600	19,460	17,900	31,010	42,630
2. Carbon replacement cost at 5-year life:	1,140	930	1,850	950	1,890	1,140	930	2,970	5,940
3. Utilities:									
-Electricity	1,170	2,060	3,800	2,590	5,180	1,620	2,840	2,210	3,210
-Steam	5,600	9,060	18,120	11,820	23,640	5,600	9,060	11,210	22,420
-Cooling water	700	1,100	2,200	1,340	2,680	700	1,100	1,340	2,680
4. Total direct costs: (1 + 2 + 3)	27,170	30,170	48,430	38,960	63,990	28,520	31,830	48,740	76,880
III. Indirect operating costs									
1. Capital recovery charges: (22 percent of total installed cost)[g]	68,060	62,390	82,370	81,610	112,210	71,360	65,640	113,700	156,320
IV. Total annualized costs (II + III)	95,230	92,560	130,800	120,570	176,200	99,880	97,470	162,440	233,200
V. Recovered solvent credit	29,880	48,380	96,760	140,280	280,550	29,880	48,380	65,450	130,900
VI. Net annualized costs (IV - V)[h]	65,350	44,180	34,040	-19,710	-104,350	70,000	49,090	96,990	102,300

[a]Includes costs for carbon adsorber, carbon, fans and blowers, controls, condenser, decanter, heat exchanger, etc. A 20 percent allowance was added to the major equipment purchase cost to compensate for unspecified items.

[b]Includes costs for instruments and controls, taxes, and freight.

[c]Includes installation direct and indirect costs.

[d]Installed cost of a capture device obtained from the NSPS development of magnetic tape coating, a similar surface coating operation.

[e]Based on vendor quote.

[f]Distillation system not needed for these model lines; therefore, no costs.

[g]16.275 percent capital recovery factor based on 10-year life and 10 percent interest, plus 5.725 percent for taxes, insurance, administration, and overhead.

[h]Negative value indicates a credit.

TABLE 8-13. CAPITAL AND ANNUALIZED COSTS FOR CONDENSATION SYSTEM CONTROL OF MODEL OPERATIONS--REGULATORY ALTERNATIVE I[6,7,9,10,20] (First Quarter 1984 Dollars)

Cost item	Rubber-coated industrial fabric			Urethane-coated fabric		Rubber-coated cord		Epoxy-coated fiberglass	
	A	B	C	B	C	A	B	B	C
I. Capital costs									
1. Control device:[a]	100,300	88,500	134,200	84,400	127,900	100,300	88,500	b	b
2. Installation cost:[a] (0.5)(1)	50,150	44,250	67,100	42,200	63,950	50,150	44,250	b	b
3. Equipment installed cost:[a] (1 + 2)	150,450	132,750	201,300	126,600	191,850	150,450	132,750	b	b
4. Ductwork installed cost:	17,310	13,960	24,650	17,310	24,650	21,120	17,310	b	b
5. Distillation system installed cost:[a]	--[c]	--	--	79,000	119,000	--	--	b	b
6. Total installed cost: (3 + 4 + 5)	167,760	146,710	225,950	222,910	335,500	171,570	150,060	b	b
II. Direct operating costs									
1. Operating and maintenance labor plus materials:[a]	2,230	4,470	4,470	4,470	4,470	2,230	4,470	b	b
2. Utilities:									
-Electricity[a]	11,200	22,400	22,400	22,400	22,400	11,200	22,400	b	b
3. Heat savings:[a]	-1,000	-2,000	-2,000	-2,000	-2,000	-1,000	-2,000	b	b
4. Total direct costs: (1 + 2 + 3)	12,430	24,870	24,870	24,870	24,870	12,430	24,870	b	b
III. Indirect operating costs									
1. Capital recovery charges: (-22 percent of total installed cost)[d]	36,910	32,280	49,710	49,040	73,810	37,750	33,010	b	b
IV. Total annualized costs (II + III)	49,340	57,150	74,580	73,910	98,680	50,180	57,880	b	b
V. Recovered solvent credit	26,010	42,130	84,290	122,180	244,360	26,010	42,130	b	b
VI. Net annualized costs (IV - V)[e]	23,330	15,020	-9,710	-48,270	-145,680	24,170	15,750	b	b

[a]Based on vendor quote.
[b]Not applicable--no control device needed at Alternative I for these model lines.
[c]Distillation system not needed for these model lines; therefore, no costs.
[d]16.275 percent capital recovery based on 10-year life and 10 percent interest, plus 5.725 percent for taxes, insurance, administration, and overhead.
[e]Negative value indicates a credit.

TABLE 8-14. CAPITAL AND ANNUALIZED COSTS FOR CONDENSATION SYSTEM CONTROL OF MODEL OPERATIONS--REGULATORY ALTERNATIVE II[6,7,9,10,20] (First Quarter 1984 Dollars)

Cost item	Rubber-coated industrial fabric			Urethane-coated fabric		Rubber-coated cord		Epoxy-coated fiberglass	
	A	B	C	B	C	A	B	B	C
I. Capital costs									
1. Control device:[a]	100,300	88,500	134,200	84,400	127,900	100,300	88,500	76,200	115,500
2. Installation cost:[a] (0.5)(1)	50,150	44,250	67,100	42,200	63,950	50,150	44,250	38,100	57,750
3. Equipment installed cost:[a] (1 + 2)	150,450	132,750	201,300	126,600	191,850	150,450	132,750	114,300	173,250
4. Partial enclosure installed cost:[b]	5,700	5,700	5,700	5,700	5,700	5,700	5,700	5,700	5,700
5. Ductwork installed cost:	17,310	13,960	24,650	17,310	24,650	21,120	17,310	13,960	21,120
6. Distillation system installed cost:[a]	--[c]	--	--	79,000	119,000	--	--	118,000	179,000
7. Total installed cost: (3 + 4 + 5 + 6)	173,460	152,410	231,650	228,610	341,200	177,270	155,760	251,960	379,070
II. Direct operating costs									
1. Operating and maintenance labor plus materials:[a]	2,230	4,470	4,470	4,470	4,470	2,230	4,470	4,470	4,470
2. Utilities:									
-Electricity[a]	11,200	22,400	22,400	22,400	22,400	11,200	22,400	22,400	22,400
3. Heat savings:[a]	-1,000	-2,000	-2,000	-2,000	-2,000	-1,000	-2,000	-2,000	-2,000
4. Total direct costs: (1 + 2 + 3)	12,430	24,870	24,870	24,870	24,870	12,430	24,870	24,870	24,870
III. Indirect operating costs									
1. Capital recovery charges: (22 percent of total installed cost)[d]	38,160	33,530	50,960	50,290	75,060	39,000	34,270	55,430	83,390
IV. Total annualized costs (II + III)	50,590	58,400	75,830	75,160	99,930	51,430	59,140	80,300	108,260
V. Recovered solvent credit	28,930	46,820	93,640	135,750	271,500	28,930	46,820	63,340	126,680
VI. Net annualized costs (IV - V)[e]	21,660	11,580	-17,810	-60,590	-171,570	22,500	12,320	16,960	-18,420

[a]Based on vendor quote.
[b]Installed cost of a capture device obtained from the NSPS development of magnetic tape coating, a similar surface coating operation.
[c]Distillation system not needed for these model lines; therefore, no costs.
[d]16.275 percent capital recovery factor based on 10-year life and 10 percent interest, pluse 5.725 percent for taxes, insurance, administration, and overhead.
[e]Negative value indicates a credit.

TABLE 8-15. CAPITAL AND ANNUALIZED COSTS FOR CONDENSATION SYSTEM CONTROL OF MODEL OPERATIONS--REGULATORY ALTERNATIVE III[6,7,9,10,20] (First Quarter 1984 Dollars)

Cost item	Rubber-coated industrial fabric			Urethane-coated fabric		Rubber-coated cord		Epoxy-coated fiberglass	
	A	B	C	B	C	A	B	B	C
I. Capital costs									
1. Control device:[a]	100,300	88,500	134,200	84,400	127,900	100,300	88,500	76,200	115,500
2. Installation cost:[a] (0.5)(1)	50,150	44,250	67,100	42,200	63,950	50,150	44,250	38,100	57,750
3. Equipment installed cost:[a] (1 + 2)	150,450	132,750	201,300	126,600	191,850	150,450	132,750	114,300	173,250
4. Total enclosure installed cost:[b]	15,000	15,000	15,000	15,000	15,000	15,000	15,000	15,000	15,000
5. Ductwork installed cost:	17,310	13,960	24,650	17,310	24,650	21,120	17,310	13,960	21,120
6. Distillation system installed cost:[a]	--[c]	--	--	79,000	119,000	--	--	118,000	179,000
7. Total installed cost: (3 + 4 + 5 + 6)	182,760	161,710	240,950	237,910	350,500	186,570	165,060	261,260	388,370
II. Direct operating costs									
1. Operating and maintenance labor plus materials:[a]	2,230	4,470	4,470	4,470	4,470	2,230	4,470	4,470	4,470
2. Utilities:									
-Electricity[a]	11,200	22,400	22,400	22,400	22,400	11,200	22,400	22,400	22,400
3. Heat savings:[a]	-1,000	-2,000	-2,000	-2,000	-2,000	-2,000	-2,000	-2,000	-2,000
4. Total direct costs: (1 + 2 + 3)	12,430	24,870	24,870	24,870	24,870	12,430	24,870	24,870	24,870
III. Indirect operating costs									
1. Capital recovery charges: (22 percent of total installed cost)[d]	40,210	35,580	53,010	52,340	77,110	41,050	36,310	57,480	85,440
IV. Total annualized costs (II + III)	52,640	60,450	77,880	77,210	101,980	53,480	61,180	82,350	110,310
V. Recovered solvent credit	30,530	49,440	98,840	143,300	286,600	30,530	49,440	66,880	133,720
VI. Net annualized costs (IV - V)[e]	22,110	11,010	-20,960	-66,090	-184,620	22,950	11,740	15,470	-23,410

[a]Based on vendor quote.
[b]Installed cost of a capture device obtained from the NSPS development of magnetic tape coating, a similar surface coating operation.
[c]Distillation system not needed for these model lines; therefore, no costs.
[d]16.275 percent capital recovery based on 10-year life and 10 percent interest, plus 5.725 percent for taxes, insurance, administration, and overhead.
[e]Negative value indicates a credit.

TABLE 8-16. CAPITAL AND ANNUALIZED COSTS FOR INCINERATOR CONTROL OF MODEL OPERATIONS--REGULATORY ALTERNATIVE IV[6,11,19] (First Quarter 1984 Dollars)

Cost item	Rubber-coated industrial fabric			Urethane-coated fabric		Rubber-coated cord		Epoxy-coated fiberglass	
	A	B	C	B	C	A	B	B	C
I. Capital costs									
1. Control device:	115,500	113,600	124,400	114,100	128,000	115,500	113,600	113,600	119,700
2. Purchased equipment cost:[a] (1.18)(No. 1 above)	136,300	134,000	146,800	134,600	151,000	136,300	134,000	134,000	141,200
3. Equipment installed cost:[b] (1.61)(No. 2 above)	219,400	215,700	236,300	216,700	243,100	219,400	215,700	215,700	227,300
4. Total enclosure installed cost:[c]	15,000	15,000	15,000	15,000	15,000	15,000	15,000	15,000	15,000
5. Ductwork installed cost:	65,400	58,100	87,900	65,400	103,000	80,400	72,900	65,400	80,400
6. Stack installed cost:	5,200	5,200	5,200	5,200	5,200	5,200	5,200	5,200	5,200
7. Total installed cost: (3 + 4 + 5 + 6)	305,000	294,000	344,400	302,300	366,300	320,000	308,800	301,300	327,900
II. Direct operating costs									
1. Operating and maintenance labor plus materials: (6 percent of total installed cost)	18,300	17,640	20,660	18,140	21,980	19,200	18,530	18,080	19,670
2. Utilities:									
-Electricity	1,070	1,870	3,450	2,360	4,710	1,470	2,580	2,010	2,920
-Natural gas	13,800	24,250	44,750	22,150	44,300	11,290	19,810	23,380	33,890
3. Total direct costs: (1 + 2)	33,170	43,760	68,860	42,650	70,990	31,960	40,920	43,470	56,480
III. Indirect operating costs									
1. Capital recovery charges: (22 percent of total installed cost)[d]	67,100	64,680	75,770	66,510	80,590	70,400	67,940	66,290	72,140
IV. Total annualized costs (II + III)	100,270	108,440	144,630	109,160	151,580	102,360	108,860	109,760	128,620

[a]Includes costs for instruments and controls, taxes, and freight.
[b]Includes installation direct and indirect costs.
[c]Installed cost of a capture device obtained from the NSPS development of magnetic tape coating, a similar surface coating operation.
[d]16.275 percent capital recovery factor based on 10-year life and 10 percent interest, plus 5.725 percent for taxes, insurance, administration, and overhead.

TABLE 8-17. AVERAGE AND INCREMENTAL COST EFFECTIVENESS OF REGULATORY ALTERNATIVES FOR STORAGE TANKS, $/Mg ($/ton) (First Quarter 1984 Dollars)

Cost item	Rubber-coated industrial fabric			Urethane-coated fabric		Rubber-coated cord		Epoxy-coated fiberglass	
	A	B	C	B	C	A	B	B	C
Average									
1. Alternative II vs. I[a]	5,140	3,050	940	b	b	5,140	3,050	2,910	800
	(4,660)	(2,760)	(850)	b	b	(4,660)	(2,760)	(2,640)	(730)
2. Alternative III vs. I[c]	-400	-370	-380	b	b	-400	-370	-500	-510
	(-370)	(-340)	(-340)	b	b	(-370)	(-340)	(-460)	(-460)
3. Alternative IV vs. I[d]	53,980	34,190	12,750	b	b	53,980	34,190	34,050	12,620
	(48,960)	(31,000)	(11,560)	b	b	(48,960)	(31,000)	(30,880)	(11,450)
Incremental									
1. Alternative II vs. I[a]	5,140	3,050	940	b	b	5,140	3,050	2,910	800
	(4,660)	(2,760)	(850)	b	b	(4,660)	(2,760)	(2,640)	(730)
2. Alternative III vs. II[e]	-28,120	-9,480	-4,960	b	b	-28,120	-9,480	-9,590	-5,090
	(-25,500)	(-8,600)	(-4,500)	b	b	(-25,500)	(-8,600)	(-8,700)	(-4,620)
3. Alternative IV vs. III[f]	380,270	377,070	189,900	b	b	380,270	377,070	375,970	189,800
	(344,900)	(342,000)	(172,250)	b	b	(344,900)	(342,000)	(341,000)	(172,150)

[a]Cost effectiveness = Table 8-5 item VI ÷ Table 7-1 VOC emission reduction beyond baseline for Regulatory Alternative II.
[b]Not applicable.
[c]Cost effectiveness = Table 8-6 item VI ÷ Table 7-1 VOC emission reduction beyond baseline for Regulatory Alternative III.
[d]Cost effectiveness = Table 8-7 item VI ÷ Table 7-1 VOC emission reduction beyond baseline for Regulatory Alternative IV.
[e]Cost effectiveness = (Table 8-6 item VI - Table 8-5 item VI) ÷ (Table 7-1 VOC emission at Regulatory Alternative II - Table 7-1 VOC emission at Regulatory Alternative III).
[f]Cost effectiveness = (Table 8-7 item VI - Table 8-6 item VI) ÷ (Table 7-1 VOC emission at Regulatory Alternative III - Table 7-1 VOC emission at Regulatory Alternative IV).

TABLE 8-18. AVERAGE AND INCREMENTAL COST EFFECTIVENESS OF REGULATORY ALTERNATIVES FOR COATING MIX PREPARATION EQUIPMENT, $/Mg ($/ton) (First Quarter 1984 Dollars)

Cost item	Rubber-coated industrial fabric			Urethane-coated fabric		Rubber-coated cord		Epoxy-coated fiberglass	
	A	B	C	B	C	A	B	B	C
Average									
1. Alternative II vs. I[a]	-273	-310	-310	b	b	-273	-310	-412	-396
	(-248)	(-282)	(-282)	b	b	(-248)	(-282)	(-375)	(-360)
2. Alternative III vs. I[c]	537	185	-4	b	b	537	185	180	-2
	(488)	(169)	(-4)	b	b	(488)	(168)	(163)	(-2)
Incremental									
1. Alternative II vs. I[a]	-273	-310	-310	b	b	-273	-310	-412	-396
	(-248)	(-282)	(-282)	b	b	(-248)	(-282)	(-375)	(-360)
2. Alternative III vs. II[d]	1,137	545	218	b	b	1,137	545	611	285
	(1,023)	(495)	(198)	b	b	(1,023)	(495)	(555)	(259)

[a]Cost effectiveness = Table 8-8 item VI + Table 7-2 VOC emission reduction beyond baseline for Regulatory Alternative II.
[b]Not applicable.
[c]Cost effectiveness = Table 8-9 item VI + Table 7-2 VOC emission reduction beyond baseline for Regulatory Alternative III.
[d]Cost effectiveness = (Table 8-9 item VI - Table 8-8 item VI) + (Table 7-2 VOC emission at Regulatory Alternative II - Table 7-2 VOC emission at Regulatory Alternative III).

TABLE 8-19. AVERAGE AND INCREMENTAL COST EFFECTIVENESS OF REGULATORY ATERNATIVES FOR MODEL COATING OPERATIONS (Using Carbon Adsorber or Incinerator), $/Mg ($/ton) (First Quarter 1984 Dollars)

Cost item	Rubber-coated industrial fabric			Urethane-coated fabric		Rubber-coated cord		Epoxy-coated fiberglass	
	A	B	C	B	C	A	B	B	C
Average									
1. Alternative II vs. I[a]	103 (93)	-68 (-62)	-180 (-163)	-696 (-631)	-794 (-720)	103 (93)	-67 (-61)	778 (706)	442 (383)
2. Alternative III vs. I[b]	357 (324)	89 (80)	-101 (-91)	-673 (-610)	-831 (-754)	356 (323)	89 (81)	751 (682)	396 (359)
3. Alternative IV vs. I[c]	2,997 (2,718)	3,152 (2,859)	2,576 (2,336)	5,034 (4,566)	4,868 (4,415)	2,798 (2,538)	2,937 (2,663)	824 (747)	483 (438)
Incremental									
1. Alternative II vs. I[a]	103 (93)	-68 (-62)	-180 (-163)	-696 (-631)	-794 (-720)	103 (93)	-67 (-61)	778 (706)	442 (383)
2. Alternative III vs. II[d]	1,138 (1,032)	558 (507)	137 (124)	-605 (-549)	-944 (-856)	1,134 (1,029)	558 (507)	-55 (-50)	-368 (-334)
3. Alternative IV vs. III[e]	13,746 (12,468)	15,404 (13,972)	13,252 (12,020)	27,862 (25,271)	27,664 (25,091)	12,742 (11,557)	14,326 (12,993)	3,061 (2,776)	3,153 (2,860)

[a]Cost effectiveness = (Table 8-11 item VI - Table 8-10 item VI) + Table 7-3 VOC emission reduction beyond baseline for Regulatory Alternative II.
[b]Cost effectiveness = (Table 8-12 item VI - Table 8-10 item VI) + Table 7-3 VOC emission reduction beyond baseline for Regulatory Alternative III.
[c]Cost effectiveness = (Table 8-16 item IV - Table 8-10 item VI) + Table 7-3 VOC emission reduction beyond baseline for Regulatory Alternative IV.
[d]Cost effectiveness = (Table 8-12 item VI - Table 8-11 item VI) + (Table 7-3 VOC emissions at Regulatory Alternative II - VOC emissions at Regulatory Alternative III).
[e]Cost effectiveness = (Table 8-16 item IV - Table 8-12 item VI) + (Table 7-3 VOC emissions at Regulatory Alternative III - VOC emissions at Regulatory Alternative IV).

TABLE 8-20. AVERAGE AND INCREMENTAL COST EFFECTIVENESS OF REGULATORY ALTERNATIVES FOR MODEL COATING OPERATINGS (Using Condensation System), $/Mg ($/ton) (First Quarter 1984 Dollars)

Cost item	Rubber-coated industrial fabric			Urethane-coated fabric		Rubber-coated cord		Epoxy-coated fiberglass	
	A	B	C	B	C	A	B	B	C
Average									
1. Alternative II vs. I[a]	-213 (-194)	-274 (-249)	-324 (-294)	-887 (-805)	-932 (-846)	-214 (-194)	-274 (249)	135 (123)	-74 (-67)
2. Alternative III vs. I[b]	-118 (-107)	-240 (-218)	-338 (-307)	-963 (-874)	-1,052 (-954)	-118 (-107)	-240 (-218)	120 (109)	-91 (-82)
3. Alternative IV vs. I[c]	5,974	4,478	3,707	6,807	6,426	6,071	5,463	824	483
Incremental									
1. Alternative II vs. I[a]	-213 (-194)	-274 (-249)	-324 (-294)	-887 (-805)	-932 (-846)	-214 (-194)	-274 (-249)	135 (123)	-74 (-67)
2. Alternative III vs. II[d]	177 (161)	-137 (-124)	-377 (-342)	-1,189 (-1,078)	-1,411 (-1,279)	177 (161)	-139 (-126)	-357 (-324)	-598 (-542)
3. Alternative IV vs. III[e]	30,770 (27,914)	23,352 (21,180)	19,844 (17,999)	37,886 (34,363)	36,333 (32,961)	31,263 (28,361)	23,278 (21,113)	22,600 (20,498)	18,216 (16,525)

[a]Cost effectiveness = (Table 8-14 item VI - Table 8-13 item VI) ÷ Table 7-3 VOC emission reduction beyond baseline for Regulatory Alternative II.
[b]Cost effectiveness = (Table 8-15 item VI - Table 8-13 item VI) ÷ Table 7-3 VOC emission reduction beyond baseline for Regulatory Alternative III.
[c]Cost effectiveness = (Table 8-16 item IV - Table 8-13 item VI) ÷ Table 7-3 VOC emission reduction beyond baseline for Regulatory Alternative IV.
[d]Cost effectiveness = (Table 8-15 item VI - Table 8-14 item VI) ÷ (Table 7-3 VOC emissions at Regulatory Alternative II - VOC emissions at Regulatory Alternative III).
[e]Cost effectiveness = (Table 8-16 item IV - Table 8-15 item VI) ÷ (Table 7-3 VOC emissions at Regulatory Alternative III - VOC emissions at Regulatory Alternative IV).

8.3 REFERENCES FOR CHAPTER 8

1. Telecon. Friedman, E., MRI, with Coffey, F., Southern Tank and Pump Company. August 23, 1984. Information on solvent storage tanks.

2. Telecon. Friedman, E., MRI, with Herman, K., Sherman Machinery. August 29, 1984. Information on mix preparation equipment.

3. Telecon. Friedman, E., MRI, with Swain, R., Lembo Corporation. August 20 and 27, 1984. Information on coating line costs.

4. Telecon. Friedman, E., MRI, with Litzler, W., C. A. Litzler Company, Inc. August 27, 1984. Information on coating line costs.

5. Telecon. Thorneloe, S., MRI, with W. Sandra, W. F. Crist Company. August 16, 1983. Information on conservation vents.

6. Richardson Engineering Services, Inc. Process Plant Construction Estimating Standards. 1983-1984 Edition. Volumes 1 and 3.

7. Telecon. Friedman, E., MRI, with Ledbetter, B., Union Chemicals Division. August 27, 1984. Information on solvent prices.

8. Neveril, R. B., GARD, Inc. Capital and Operating Costs of Selected Air Pollution Control Systems. U. S. Environmental Protection Agency. Research Triangle Park, N.C. EPA Publication No. EPA-450/5-80-002. December 1978. p. 5-45.

9. Letter from Memering, L., United Air Specialists, Inc., to Thorneloe, S., MRI. November 7, 1983. Information on Kon-den-Solver® solvent vapor recovery systems.

10. Peters, M. S., and K. D. Timmerhaus. Plant Design and Economics for Chemical Engineers. New York, McGraw-Hill Book Company. 1980. p. 166.

11. Reference 8, p. 5-37.

12. Memorandum from Glanville, J., MRI, to Magnetic Tape Project File. June 22, 1984. Wastewater discharge calculations and summary.

13. Reference 8, p. 3-12.

14. U.S. Department of Labor. Bureau of Labor Statistics. Employment and Earnings.

15. U.S. Department of Labor. Bureau of Labor Statistics. Producer Prices and Price Indexes Data.

16. U. S. Environmental Protection Agency. VOC Emissions From Volatile Organic Liquid Storage Tanks--Background Information for Proposed Standards. EPA-450/3-81-003a. Research Triangle Park, North Carolina. July 1984. p. 8-19.

17. Reference 10, pp. 172, 174.

18. Memorandum from Friedman, E., MRI, to Polymeric Coating of Supporting Substrates Project File. September 18, 1984. Product-specific raw material costs for model coating lines.

19. U. S. Environmental Protection Agency. Organic Chemical Manufacturing. Volume 5: Adsorption, Condensation, and Absorption Devices. EPA-450/3-80-027. Research Triangle Park, North Carolina. December 1980. pp. IV-2, IV-6.

20. Telecon. Thorneloe, S., MRI, with Schweitzer, P., Chempro. August 29 and 30, 1984. Information on distillation system.

9. ECONOMIC ANALYSIS

9.1 INDUSTRY PROFILE

9.1.1 Introduction and Summary

Nationwide, there are over 100 manufacturing firms whose activities include polymeric coating of supporting substrates. The firms in the polymeric coating industry are located throughout the country; however, they tend to be concentrated in the Northeast. The majority of coating operations involve the production of industrial or intermediate products as opposed to final or consumer products. About half of the firms are "commission" coaters who sell coated products to manufacturers of final products, while the other half consists of "captive" coaters who either manufacture final products themselves, or are owned by firms that do so.

The firms may be grouped into eight four-digit SIC industry categories. Two of these categories account for about 50 percent of the total value of polymeric coated substrates. These are SIC 2295 (Coated Fabrics, Not Rubberized), and SIC 2296 (Tire Cord and Fabric).

There are many final or consumer products which incorporate polymeric coated substrates -- one firm, for example, has estimated that its output is eventually used in the production of over 1,500 final products. By far, however, the most important use of polymeric coated products is in the manufacture of motor vehicles. Currently, more than half of the output of polymeric coated products is consumed in this use.

In 1982, the total value of output produced by the polymeric coating industry was about $5.8 billion. The industry is expected to grow at an annual rate of 2.8 percent over the period from 1982 to 1990.

9.1.1.1 Industry Segments. As noted above, the firms that may be affected by the NSPS can be grouped into eight four-digit SIC categories. These categories are:

- o 2241 - Narrow Fabric Mills;
- o 2295 - Coated Fabrics, Not Rubberized;
- o 2296 - Tire Cord and Fabric;
- o 2394 - Canvas and Related Products;
- o 2641 - Paper Coating and Glazing;
- o 3041 - Rubber and Plastics Hose and Belting;
- o 3069 - Fabricated Rubber Products, Not Elsewhere Classified; and
- o 3293 - Gaskets, Packing, and Sealing Devices.

Two of these groups SIC 2241 (Narrow Fabric Mills) and SIC 2641 (Paper Coating and Glazing) are only remotely affected by the NSPS since the overwhelming majority of products attributed to these groups do not require polymeric coating. Accordingly, these two SIC groups are given only limited attention in this section. The value of annual shipments for each of the remaining six SIC groups is presented in Table 9-1. All values are in current dollars (i.e., unadjusted for inflation).

SIC 2295 (Coated Fabrics, Not Rubberized) includes pyroxylin (nitrocellulose) coated fabrics, vinyl coated fabrics, and others such as polyurethane coated fabrics.[1] Most firms included in this group are considered part of the coating industry.

Included in SIC 2296 (Tire Cord and Fabric) are all firms that manufacture tire cord and fabric regardless of whether these products are consumed internally or sold to tire manufacturers.[2] Most firms in this industry group are considered part of the coating industry.

The group SIC 2394 (Canvas and Related Products) includes all manufacturers of canvas and canvas products such as awnings, tents, air-supported structures, tarpaulins, and other covers.[3] Most firms in this SIC group are considered part of the coating industry.

Census Bureau data for SIC 3041 (Rubber and Plastics Hose and Belting) indicate that most of this group's output can be attributed to the polymeric coating industry.[4] Most of the products of SIC 3041 are manufactured by coating textile substrates; a small portion is manufactured using wire as the supporting substrate. About 85 percent of the total value of the output of this SIC group is attributable to coated products that could be affected by the NSPS.

TABLE 9-1. WHOLESALE VALUE OF SHIPMENTS BY SIC GROUP, 1973-1982
($ Current X10 ^{6})

	SIC group					
Year	2295[a]	2296[b]	2394[c]	3041[d]	3069[e]	3293[f]
1973	975.9	717.5	321.8	1,052.0	3,265.3	723.0
1974	1,056.4	805.0	293.2	1,249.9	3,490.2	834.7
1975	986.1	748.9	284.3	1,235.4	3,409.1	842.2
1976	1,182.5	835.7	301.7	1,411.9	3,888.1	1,019.3
1977	1,059.0	1,013.2	486.8	1,765.7	4,565.0	1,267.1
1978	949.1	1,090.1	578.6	2,007.8	4,930.3	1,481.0
1979	998.3	1,129.2	542.3	2,177.7	5,433.6	1,675.4
1980	951.7	1,009.2	517.2	1,941.5	5,385.4	1,610.4
1981	1,044.7	1,060.1	658.1	2,147.2	6,280.6	1,781.2
1982	1,217.7	981.5	741.3	1,958.0	6,193.6	1,650.0

[a]Reference 1, p. 3.
[b]Reference 2, p. 3.
[c]Reference 3, p. 3.
[d]Reference 4, p. 3.
[e]Reference 5, p. 3.
[f]Reference 6, p. 3.

Most of the products covered by SIC group 3069 (Fabricated Rubber Products, Not Elsewhere Classified) are rubber goods sold for a wide variety of products such as foam rubber, mats, surgical gloves, and shoe parts. Analysis of Census Bureau data indicates that roughly 15 percent of the total value of output of SIC 3069 can be considered part of the polymeric coating industry. Some of the products affected are: industrial products such as fuel cells and single ply membrane rubber roofing; rubber coated fabrics such as protective clothing, footware fabrics, and inflatable fabrics; and other rubber goods such as boats, pontoons, life rafts, and hot air balloons.[5]

Another group only partially affected by the NSPS is SIC 3293 (Gaskets, Packing, and Sealing Devices). This group includes production of a variety of metallic and nonmetallic gaskets, and sealing devices including those composed of asbestos, paper, felt, cork, and various types of metals.[6] Polymeric coated rings and seals account for about 15 percent of the total value of this group's output.

9.1.1.2 Industry Output. The data presented above can be used to estimate the polymeric coating industry's total value of output for 1982. Such an estimate can be obtained by adjusting the total output values presented in Table 9-1 (for the six four-digit SIC groups) by the estimated percentage of each SIC group affected by the NSPS. The results obtained using this adjustment procedure are presented in Table 9-2; they show that in 1982, the polymeric coating industry produced $5.8 billion worth of output. This represents about 0.2 percent of the 1982 GNP figure of $3,057.5 billion.[7]

9.1.2 Production, Prices, and Employment

9.1.2.1 Historical Production. The most consistent source of historical output data for this industry is the Census of Manufactures. As noted previously, Table 9-1 presents the level of shipments for each of the major SIC groups in which polymeric coating is known to be performed. In Table 9-3, these data are adjusted by the percentages discussed above to obtain shipment estimates for only those products that could be affected by the NSPS. The estimates are expressed in 1982 dollars to facilitate observation of production trends in the industry segments. Table 9-4 expresses the output of each segment as a percentage of the annual totals.

TABLE 9-2. POLYMERIC COATING OF SUPPORTING SUBSTRATES: ADJUSTED VALUE OF SHIPMENTS, 1982
($ 1982 X10^6)

SIC group	1982 value of shipments[a]	X	Percentage affected[b]	=	Adjusted value of shipments
2295	1,217.7		100		1,217.7
2296	981.5		100		981.5
2394	741.3		100		741.3
3041	1,958.0		85		1,664.3
3069	6,193.6		15		929.0
3293	1,650.0		15		247.5
TOTAL					5,781.3

[a]Table 9-1 data.

[b]These percentages are rough approximations of the portion of total four-digit SIC output that could be considered part of the source category affected by this NSPS. The percentages are estimates based upon inspection of Census of Manufacturing product and product class data for the appropriate SIC groups. See Section 9.1.1.1.

TABLE 9-3. POLYMERIC COATING OF SUPPORTING SUBSTRATES: WHOLESALE VALUE OF SHIPMENTS FOR INDUSTRY SEGMENTS, 1973-1982[a] ($ 1982 X10^6)

Year	SIC segment						Industry total
	2295[b]	2296[c]	2394[d]	3041[e]	3069[f]	3293[g]	
1973	1,610.5	1,542.5	531.0	1,922.1	1,052.8	233.1	6,892.0
1974	1,551.6	1,428.0	430.6	1,884.6	928.7	222.1	6,445.6
1975	1,460.9	1,204.6	421.2	1,689.1	822.5	203.2	5,801.5
1976	1,630.1	1,268.2	415.9	1,821.3	885.1	232.0	6,252.6
1977	1,404.9	1,460.6	645.8	2,163.5	987.1	274.0	6,935.9
1978	1,213.4	1,506.7	739.7	2,358.8	1,022.2	307.0	7,147.8
1979	1,209.0	1,404.1	656.7	2,301.7	1,013.5	312.5	6,897.5
1980	1,059.6	1,121.5	575.8	1,834.0	897.7	268.4	5,757.0
1981	1,068.8	1,090.7	673.3	1,895.7	978.5	277.5	5,984.5
1982	1,217.7	981.5	741.3	1,664.3	929.0	247.5	5,781.3

[a]Table 9-1 data converted to 1982 dollars through use of the Producer Price Index for Rubber and Plastic Products (for SIC's 2296, 3041, 3069, and 3293) or the Producer Price Index for Textile Products (for SIC's 2295 and 2394).
[b]Coated Fabrics, Not Rubberized, 100 percent included.
[c]Tire Cord and Fabric, 100 percent included.
[d]Canvas and Related Products, 100 percent included.
[e]Rubber and Plastics Hose and Belting, 85 percent included.
[f]Fabricated Rubber Products, Not Elsewhere Classified, 15 percent included.
[g]Gaskets, Packing, and Sealing Devices, 15 percent included.

TABLE 9-4. POLYMERIC COATING OF SUPPORTING SUBSTRATES: PERCENTAGES OF TOTAL OUTPUT BY INDUSTRY SEGMENT, 1973-1982

Year	SIC segment						Industry total[g]
	2295[a]	2296[b]	2394[c]	3041[d]	3069[e]	3293[f]	
1973	23.4	22.4	7.7	27.9	15.3	3.4	100.0
1974	24.1	22.2	6.7	29.2	14.4	3.4	100.0
1975	25.2	20.8	7.3	29.1	14.2	3.5	100.0
1976	26.1	20.3	6.7	29.1	14.2	3.7	100.0
1977	20.3	21.1	9.3	31.2	14.2	4.0	100.0
1978	17.0	21.1	10.3	33.0	14.3	4.3	100.0
1979	17.5	20.4	9.5	33.4	14.7	4.5	100.0
1980	18.4	19.5	10.0	31.9	15.6	4.7	100.0
1981	17.9	18.2	11.3	31.7	16.4	4.6	100.0
1982	21.1	17.0	12.8	28.8	16.1	4.3	100.0

[a]Coated Fabrics, Not Rubberized.
[b]Tire Cord and Fabric.
[c]Canvas and Related Products.
[d]Rubber and Plastics Hose and Belting.
[e]Fabricated Rubber Products, Not Elsewhere Classified.
[f]Gaskets, Packing and Sealing Devices.
[g]Columns may not sum exactly to 100 because of rounding.

Tables 9-3 and 9-4 show that the Rubber and Plastics Hose and Belting (SIC 3041) segment of the industry accounts for the largest portion of the total value of industry output. Significant shares are also accounted for by Coated Fabrics, Not Rubberized (SIC 2295), Tire Cord and Fabric (SIC 2296), Fabricated Rubber Products, Not Elsewhere Classified (SIC 3069) and Canvas and Related Products (SIC 2394). A small portion is due to Gaskets, Packing, and Sealing Devices (SIC 3293).

As Table 9-3 shows, total industry output during the early 1980's was below the levels of the late 1970's. The reduced output of the early 1980's is probably attributable to the recession experienced during those years. This is especially true in light of the fact that many of the products affected by this NSPS are sold as industrial products.

Output in the Tire Cord and Fabric (SIC 2296) segment of the industry has declined both in absolute value as well as in relation to the whole industry. Table 9-3 shows that shipments for this industry segment declined by more than one-third over the period 1973-1982. During the same period, the percentage of total industry output accounted for by Tire Cord and Fabric declined from 22.4 percent in 1973 to 17.0 percent in 1982 (see Table 9-4). Most of this decline can be attributed to improved tire life.

Output for the industry segment Coated Fabrics, Not Rubberized (SIC 2295) also declined over the period 1973-1982. This decrease, however, was less severe than that of SIC 2296, and is largely attributable to decreased automobile sales.

9.1.2.2 Prices. Most of the products of the polymeric coating industry are intermediate products, which are consumed internally by the same firm, or sold to other firms. Consequently, the market for these products is often poorly defined, and price information is not widely available. However, the quantity and value data reported in the Census of Manufactures can be used to approximate average per-unit prices. Table 9-5 presents prices derived from the Census data noted above. Included are average prices for products such as vinyl and urethane coated fabrics, tire cord and fabric, and various rubber and plastics hoses and belts.

TABLE 9-5. AVERAGE PRICES FOR SELECTED PRODUCTS
($ 1982)

SIC code	Product	Price, $
22951[a]	Pyroxylin coated fabrics	
2295111	- Light cotton fabric	1.11/linear yd
22952	Vinyl coated fabrics	
2295213	- 10 oz or less, woven fabric	1.63/linear yd
2295215	- 10 oz or less, knitted fabric	1.91/linear yd
2295217	- 10 oz or less, nonwoven fabric	1.67/linear yd
2295222	- 10 to 16 oz, woven fabric	2.74/linear yd
2295224	- 10 to 16 oz, knitted fabric	2.70/linear yd
2295226	- 10 to 16 oz, nonwoven fabric	3.28/linear yd
2295232	- More than 16 oz, woven fabric	3.10/linear yd
2295234	- More than 16 oz, knitted fabric	4.04/linear yd
2295236	- More than 16 oz, nonwoven fabric	3.90/linear yd
22953	Other coated fabrics	
2295315	- Polyurethane coated fabrics	3.12/linear yd
	All other coated fabrics	
2295322	- 10 oz or less, woven fabric	1.57/linear yd
2295338	- 10 to 16 oz, all fabrics	2.95/linear yd
2295348	- More than 16 oz, all fabrics	2.77/linear yd
2296000[b]	Tire cord and fabric	1.99/lb
30411[c]	Rubber and plastics flat belts	
3041103	- Lightweight conveyor	2.05/lb
3041105	- Heavy duty conveyor	1.63/lb
3041113	- Transmission, flat	4.29/lb
3041116	- Other rubber and plastic belts	1.72/lb
30412	Rubber and plastics belts, not flat	
3041231	- Industrial	6.39 ea
3041241	- Agricultural	5.98 ea
3041251	- Fractional horsepower	1.89 ea
30414	Rubber hose, nonhydraulic, not garden	
3041451	- Textile based	0.40/lb
30415	Rubber and plastics garden hose	
3041561	- Plastic garden hose	0.17/lb
3041563	- Rubber garden hose	0.26/lb
30416	All other rubber and plastic hose	
3041642	- Single jacket woven textile	0.96/lb
3041644	- Double jacket woven textile	1.28/lb

(Continued)

TABLE 9-5. (continued)

SIC code	Product	Price, $
3069C[d]	Industrial Rubber Products	
3069C14	- Single ply membrane roofing	0.42/ft^2

[a]Reference 1, pp. 4-5.
[b]Reference 2, p. 4.
[c]Reference 4, p. 4.
[d]Reference 5, pp. 4-5.

9.1.2.3 Employment. Census Bureau data were used to estimate employment in the various industry segments for the years 1973-1982. The annual employment for each segment was obtained by applying the appropriate industry affected percentage noted in Table 9-2 to the Census estimate of employment at the four-digit SIC level. The calculated employment estimates are presented in Table 9-6. Total industry employment during 1982 is estimated to have been 71,300 persons. While this figure represents less than 0.08 percent of total nonagricultural employment for 1982, it should be noted that it includes all persons employed by coating firms, including those who manufacture final products at captive coaters.

9.1.3 Market Structure

9.1.3.1 Polymeric Coating Companies. Table 9-7 lists 108 companies operating 128 plants that perform polymeric coating of supporting substrates. Listed for each plant are the location, SIC code, whether the coating operation is commission or captive, the major end products produced, and whether the firm is a "small business" according to criteria set forth by the U.S. Small Business Administration. An inspection of the types of products manufactured by the plants provides some idea of the diverse nature of this industry.

The plants are concentrated in the Northeastern part of the United States. Massachusetts, New York, New Jersey, and Ohio account for over one third of the plants currently in operation. Information regarding the degree of integration and levels of industrial concentration exhibited by the companies in this industry is provided in the following sections.

9.1.3.2 Integration. Among the firms belonging to this industry there is evidence of horizontal and vertical integration as well as diversification. A horizontally-integrated firm owns and operates multiple coating facilities in various locations. A vertically-integrated firm, on the other hand, is involved in related activities other than the coating operation itself, such as manufacturing the substrate and coatings, or further processing coated materials into final products such as conveyor belts or tires. Diversification means that the company manufactures other products or provides services unrelated to its coating activities.

TABLE 9-6. POLYMERIC COATING OF SUPPORTING SUBSTRATES: INDUSTRY SEGMENT EMPLOYMENT, 1973-1982 (thousands)

Year	SIC segment						Industry total
	2295[a]	2296[b]	2394[c]	3041[d]	3069[e]	3293[f]	
1973	18.5	10.3	14.0	25.6	16.4	4.2	89.0
1974	18.6	11.4	11.2	26.5	15.8	4.2	87.7
1975	15.9	10.0	10.4	23.1	13.5	3.8	76.7
1976	17.1	10.1	10.3	25.4	14.0	4.1	81.0
1977	13.6	9.6	13.9	29.2	14.8	5.0	86.1
1978	12.3	9.6	15.4	32.5	14.9	5.1	89.8
1979	12.9	9.7	12.0	32.9	15.9	5.4	88.8
1980	11.8	8.9	11.1	27.5	14.2	4.7	78.2
1981	11.4	8.6	12.5	22.9	14.4	4.5	74.3
1982	11.7	6.5	14.5	21.0	13.1	4.5	71.3

[a]Reference 1, p. 3.
[b]Reference 2, p. 3.
[c]Reference 3, p. 3.
[d]Reference 4, p. 3.
[e]Reference 5, p. 3.
[f]Reference 6, p. 3.

TABLE 9-7. PLANTS APPLYING POLYMERIC COATINGS TO SUPPORTING SUBSTRATES: LOCATION, SIC CODE, TYPE OF COATER, AND BUSINESS SIZE [a]

Plant/location	SIC Code	Commission coater Yes/No	Major end products	Small business[b] Yes/No
Albany International Buffalo, N.Y.	3041	No	Conveyor belts	No
Aldan Rubber Co. Philadelphia, Pa.	2295, 2394, 3069	Yes	Coated fabric used to fabricate products (e.g., tents, tarpaulins, rainwear)	Yes
Alpha Associates, Inc. Woodbridge, N.J.	2295	Yes	Coated fabric	Yes
The Amerbelle Corp. Rockville, Conn.	2295, 2394	Yes	Coated fabric used to make products (e.g., sails and tents)	Yes
American Waterproofing New Haven, Mo.	2295	Yes	Coated fabric	Yes
Archer Rubber Co. Milford, Mass.	3069	Yes	Coated fabric used to fabricate products (e.g., diaphragms, hospital sheeting)	Yes
Armstrong Rubber Co. New Haven, Conn.	2296	Yes	Tire fabric	No
Athol Manufacturing Corp. Butner, N.C.	2295	Yes	Upholstery for automobiles, school buses	Yes
Aurora Bleaching, Inc. Aurora, Ill.	2295	c	Coated fabric	Yes
Bibb Company Macon, Ga.	3041	c	Coated yarn for V-belts, coated fabric for conveyor belts	No
Bond Cote of Virginia, Inc. Pulaski, Va.	2295	Yes	Coated fabric	No
Bridgestone Lavergne, Tenn.	2296	No		No
A.S. Browne Manufacturing Co. Tilton, N.H.	3041	No	Industrial belts	Yes
Buffalo Weaving and Belting Buffalo, N.Y.	3041, 3069	No	Belting, sheeting, matting	Yes
Burlington Industries, Inc. Kernersville, N.C.	2296, 3041, 3069	No	Coated fabric for tire cord, V-belts, snow fences, diaphragms	No
CEBI Norton Watertown, Mass.	2295	c	Coated fabric	No
Chase & Sons, Inc. Randolph, Mass.	3069	Yes	Coated fabric for cable and wire industry	Yes
CHEMFAB N. Bennington, Vt.	3041	No	Coated fabric for belting	Yes
Chemprene Beacon, N.Y.	3041, 3069	No	Coated fabric for diaphragms, belting, tarpaulins, machine covers	No

(Continued)

TABLE 9-7. (continued)

Plant/location	SIC Code	Commission coater Yes/No	Major end products	Small business[b] Yes/No
Chrysler Plastic Products Corp., Sandusky, Ohio	2295, 3069	No	Coated fabric for automobile roofing, door panels, seating	No
Cleveland Plastics Cleveland, Tenn.	2295	No	Coated fabric for products (e.g., handbags)	Yes
Coast Craft Rubber Co. Torrance, Calif.	3069	No	Diaphragms	Yes
Collins & Aikman Corp. Roxboro, N.C.	2295	No	Upholstery, geotextiles	No
Columbus Coated Fabrics Columbus, Ohio	2295	c	Coated fabric	No
Compo Industries Lowell, Mass.	2295	c	Footwear fabric	No
Cooley, Inc. Pawtucket, R.I.	2295, 3069	Yes	Coated fabric for products (e.g., windscreen, netting)	Yes
Cooper Tire and Rubber Co. Findley, Ohio Texarkana, Ark.	2296	No	Tire Belts	No
Custom Coated Products Cincinnati, Ohio	2295	Yes	Sporting goods, automotive parts	Yes
Dayco Corp. Three Rivers, Mich. Waynesville, N.C.	3069	No	Printing blankets	No
Delatex Processing Corp. Clifton, N.J.	2295	Yes	Coated fabric	Yes
Dunlop Tire and Rubber Co. Buffalo, N.Y. Huntsville, Ala. Utica, N.Y.	2296	No	Tire fabric Tire cord	No
Duracote, Inc. Ravenna, Ohio	2295	Yes	Coated fabric for marine, automotive and communication industries	Yes
Durkee-Atwood Co. New Hope, Minn.	3069	No	Coated fabric for appliances, automotive, construction industries	No
E.I. DuPont de Nemours and Co., Inc. Fairfield, Conn.	--	No	c	No
Eagle Dyeing and Finishing Co. Mount Holly, N.J.	3069	c	Furniture, upholstery	Yes
Eli Sandman Co. Worcester, Mass.	2295	c	Coated fabric	Yes

(Continued)

TABLE 9-7. (continued)

Plant/location	SIC Code	Commission coater Yes/No	Major end products	Small business[b] Yes/No
Elizabeth Webbing Co., Inc. Central Falls, R.I.	2295	c	Fabric coated for mildew and water repellancy	Yes
Emerson Textiles Chelsea, Mass.	3069	c	Footwear fabric	Yes
Engineered Yarns, Inc. Coventry, R.I.	2295	c	Coated fabric	Yes
Essex Group, Inc. Fort Wayne, Ind.	3069	c	Coated electrical wire	No
Ex-Cell-O Fabric Finishers Inc., Coshocton, Ohio	2394	Yes	Canvas products	Yes
Exxon Chemical Americas Summerville, S.C.	2295	Yes	Coated fabric, geotextiles	No
Fabrite Laminating Corp. Woodridge, N.J.	2295	Yes	Coated fabric	Yes
Facemate Corp. Chicopee Falls, Ohio	c	c	c	Yes
Ferro Corp. Culver City, Calif. Norwalk, Conn.	2295, 3069	Yes	Coated fabric for automotive, military industries	c
Firestone Industrial Products Noblesville, Ind.	3041, 3069	No	Hoses, seatbelts, roofing	No
Flextrim Products South El Monte, Calif.	2295	Yes	Coated fabric	c
Foss Manufacturing Co., Inc. Haverhill, Mass.	2295, 3293	Yes	Carpet, gaskets, geotextiles, footwear fabric, wallcoverings	Yes
G&C Rubber Coating Dalton, Ga.	c	c	c	Yes
Gates Rubber Co. Siloam Springs, Ark. Denver, Colo. Elizabethtown, N.J.	3041	No	Belts and hoses	No
H.A. Gelman, Co. Brooklyn, N.Y.	2295, 3069	c	Fabric for automotive, apparel, bedding, furniture and footwear industries	c
Gem Urethane Corp. Amsterdam, N.Y.	2295	Yes	Artificial leather for footwear, luggage	Yes
General Fabric Fusing Cincinnati, Ohio	2295	c	Coated fabric	Yes
General Tire and Rubber Co Toledo, Ohio Columbus, Miss. Jeanette, Pa. Barnesville, Ga.	2295 2296	-	Vinyl coated fabric Tire cord	No

(Continued)

TABLE 9-7. (continued)

Plant/location	SIC Code	Commission coater Yes/No	Major end products	Small business[b] Yes/No
Globe Albany Buffalo, N.Y.	3041	Yes	Belting	No
B.F. Goodrich, Co. Akron, Ohio	2295, 3069	No	Belting, hoses, missile and marine products, and tank lining	No
Elgin, S.C.	3041		V-belts	
Greenville, S.C.			Rubber hose	
Oneida, Tenn.			Hoses, belting	
W.R. Grace and Co. Adams, Mass. Morristown, Tenn.	3069	No	Printing blankets	No
Graniteville Co. Graniteville, S.C.	2295, 2394, 3069	No	Awnings, tents, outdoor furniture	No
Guilford Mills, Inc. Greensboro, N.C.	2295, 2394	Yes	Automotive fabric, tents, upholstery wallcoverings	No
Haartz Auto Fabrics, Inc. Action, Mass.	2295	Yes	Automotive fabric	Yes
Haartz Mason, Inc. Watertown, Mass.	3069	c	Convertible top fabric	Yes
Hadbar Monrovia, Calif.	3069	Yes	Automotive fabric, fabric for military, mining, aircraft missiles	Yes
Hexcel Livermore, Calif.	2295	Yes	Fabric for aircraft and missiles	No
Holliston Mills, Inc. Kingsport, Tenn. Lincoln, R.I.	2295	c	Fabric for graphic arts and book covers	No
Hub Fabric Leather Everett, Mass.	2295	c	Coated flocked fabric	Yes
Jewell Sheen Coating, Inc. Long Island City, N.Y.	2295	Yes	Sporting goods, lapidary supplies, fabric for instruction	Yes
Joanna Western Mills Co. Chicago, Ill.	2295	Yes	Bookcovers, window shades	No
Johns Manville Corp. Manville, N.J.	3293	No	Packings, seals, gasket fabric	No
Kenyon Piece Dyeworks Co. Kenyon, R.I.	2295	Yes	Coated fabrics for products (e.g., rainwear, tents, luggage, hot air balloon cloth, heat seals)	No
Kleen-Tex Industries, Inc. LaGrange, Calif.	2295	c	Coated fabric for products (e.g., awnings, upholstery, cushions for pole vault and high jump, seat covers)	Yes

(Continued)

TABLE 9-7. (continued)

Plant/location	SIC Code	Commission coater Yes/No	Major end products	Small business[b] Yes/No
Lewcott Chemicals and Plastics Co. Millford, Mass.	2295	Yes	Military products	Yes
Lloyd Manufacturing Co., Inc. Warren, R.I.	2295, 3069	Yes	Backing for napping machines, cloth for textile industry	Yes
Ludlow Composites Fremont, Ohio	2295	Yes	Coated fabric	No
Marathon Rubber Products Wausau, Wis.	3069	Yes	Rainwear	Yes
McCord Gasket Co. Wyandotte, Mich.	3293	No	Gaskets	No
Michelin Corp. Greenville, S.C.	2296	No	Cord coating	No
Milliken and Co. La Grange, Ga.	2295	c	Coated fabric	No
Murray Rubber Co. Houston, Tex.	3293	No	Seals and Gaskets	No
National Coating Corp. Rochland, Mass.	2295	No	Textiles cloth for laminates	Yes
Neese Coated Fabrics St. Louis, Mo.	2295, 3069	Yes	Coated fabrics for tarpaulins, convertible tops and shoe fabric	Yes
Nylco Corp. Nashua, N.H.	2295	Yes	Waterproofed fabric	Yes
OOC, Inc. Norcross, Ga.	2295	No	Architectural coverings for tennis courts, greenhouses	Yes
Orchard Manufacturing Co. Lincoln, R.I.	3069	Yes	Rubber-coated fiberglass	Yes
Otto Fabrics, Inc. Wichita, Kans.	2295	Yes	Awnings, belts, roofing	Yes
Pacific Combining Corp. Los Angeles, Calif.	2295	Yes	Coated fabric	Yes
Packaging Systems Corp. Orangeburg, N.Y.	2295	Yes	Coated fabric	Yes
Plymouth Rubber Co. Boston, Mass.	3069	Yes	Rainwear, gas mask fabric	No
Polyclad Laminates Millburg, Mass. Franklin, N.J.	2295	No	Coated fabric used to produce a laminate for printed circuits	Yes
Putman-Herzl Finishing Co., Inc. Putnam, Conn.	2295	Yes	Coated fabric for products (e.g., backpacks, ski wear, snowmobiles)	Yes

(Continued)

TABLE 9-7. (continued)

Plant/location	SIC Code	Commission coater Yes/No	Major end products	Small business[b] Yes/No
RCA Rubber Co. Akron, Ohio	3069	c	Rubber-coated fiber	Yes
RM Industrial Products, Inc. North Charleston, S.C.	2295, 3069	c	Coated fabric	No
Rainfair Racine, Wis.	3069	No	Protective clothing, rainwear	Yes
Reef Industries, Inc. Houston, Tex.	3069	No	Lightweight liners for outdoor storage covers	Yes
Reeves Brothers, Inc.		Yes		No
Rutherfordton, N.C.	2295, 3069		Coated fabric	
Spartanburg, S.C.	2295		Upholstery	
Buene Vista, Va.	3069		Printing blankets, inflatibles, diaphragms, gaskets	
Rose & Sons Hialeah, Fla.	2295	c	Coated fabric	c
Scapa Dryers, Inc. Waycross, Ga.	2295	c	Coated fabric	Yes
Seaman Corp. Millersburg, Ohio	3069	Yes	Coated fabric	Yes
Stacy Fabrics Corp. Wood Ridge, N.J.	2295	Yes	Coated fabric	Yes
Stanbee Co., Inc. Carlstadt, N.J.	2295	No	Shoe products (e.g., box heels, liners)	Yes
Standard Coated Products Havre de Grace, Md.	2295	c	Coated fabric and paper for aircraft	No
Star Tex Industries Newburg Port, Mass.	2295, 3069	c	Coated fabric for shoes, handbags, sporting goods	c
Stedfast Rubber Co. North Eastern, Mass.	3069	Yes	footwear fabric	Yes
J.P. Stevens and Co., Inc.		No		No
Walterboro, S.C.	2295		Coated fabric for insect	
Easthampton, Mass.	3069		Coated fabric	
Stuart, Va.	2295		Backing to carpet for automotive industry	
Trostel Leather Products Elkhorn, Wis.	3069	No	Impregnating leather for industrial packings and seals	No
Uniroyal, Inc. Middlebury, Conn.	2295	No	Coated fabric for upholstery, automobiles, and furniture	No
Utex Industries Weimar, Tex.	3293	No	Seals and gaskets	No

(Continued)

TABLE 9-7. (continued)

Plant/location	SIC Code	Commission coater Yes/No	Major end products	Small business[b] Yes/No
Victor Products Chicago, Ill.	3293	No	Gaskets	Yes
Viking Technical Rubber Co. West Haven, Conn.	3069	Yes	Coated fabric for products (e.g., tarpaulins, marine vests)	Yes

[a]Compiled from State and industry contacts, plant visits, trade associations, 1983 NEDS listing by SIC codes, and the 1983 Industrial Fabric Reviewer/Buyer's Guide.
[b]According to employment-size criteria established by the U.S. Small Business Administration. For the SIC groups affected by this standard, SBA defines a small business as one that employs fewer than 1,000 persons, for SIC's 2295 and 2296, and fewer than 500 persons, for all other affected SIC groups.
[c]Information not available.

Concerning horizontal integration, there are several firms with coating operations in more than one location. Industrywide, however, only about 10 percent of all plants currently operating are owned by horizontally-integrated firms. Horizontally-integrated firms do not tend to fall exclusively within any of the SIC segments previously discussed.

With regard to vertical integration, the distinction between captive (vertically integrated) and commission (nonintegrated) coating firms is pertinent. Most coating firms are vertically integrated backward to some degree, manufacturing some raw materials used in the coating process such as the coating itself, or certain substrates. However, the distinction between a captive and commission coater is made according to the level of forward integration displayed by the firm. Commission coaters generally do not produce a final product but instead sell coated substrates to other firms that use them to produce a variety of products. Captive coaters typically either produce some final product themselves, such as a printing blanket or industrial belt, or are owned by another firm that consumes the majority of the coated output, such as tire cords and fabric. In general, the vertically integrated captive coaters are those that belong to SIC 2296 (Tire Cord and Fabric) or SIC 3041 (Rubber and Plastics Hose and Belting) or to a lesser degree, SIC 2295 (Coated Fabrics, Not Rubberized).

Diversification is typically observed in the larger firms in this industry. Generally, these are firms whose principal products are tires and rubber, but may also produce plastics, synthetic organic chemicals, and agricultural chemicals.

9.1.3.3 Concentration. The extent to which industry output tends to be concentrated at a specific number of manufacturers is a general indicator of the presence of entry barriers and thus the degree of competition existing in an industry. Lower levels of concentration are usually indicative of relatively easy entry of new firms and thus higher degrees of competition, while high concentration levels generally indicate the existence of entry barriers and thus the absence of a highly competitive environment. Levels of concentration are reported by the Census Bureau in the form of concentration ratios, which indicate the percentages of total industry output produced by the largest 4, 8, and 20 companies.[8]

Table 9-8 presents concentration ratios for the six four-digit SIC industries analyzed in this study, and for the products of the polymeric coating industry. The highest degree of competition is exhibited among the producers of coated fabrics, particularly those who coat with urethane, rubber, and vinyl (SIC 2295 and SIC 3069D). The producers of canvas products and gaskets, packing and sealing devices also exhibit high levels of competition, as indicated by low concentration ratios.

Production is highly concentrated in the industry segments performing rubber coating. In particular, the segments involving the production of tire cord and fabric (SIC 2296) and various flat belts and V-belts (SIC 30411 and SIC 30412) show high concentration ratios, as does the coating of fabrics with pyroxylin (nitrocellulose). Accordingly, lower levels of competitive pressure are experienced by firms manufacturing these products. The industry segments with higher degrees of concentration are composed largely of captive coaters exhibiting greater forward integration. These segments generally include the manufacturers of rubber-coated products such as tire cords and fabrics and various belts and hoses.

9.1.4 Demand and Supply Issues

9.1.4.1 Determinants of Demand. The majority of products produced by the polymeric coating industry are used primarily as inputs in the manufacture of final or consumer products. Therefore, the demand for the output of the industry is a "derived demand" in that it results directly from consumer demand for the various final products incorporating polymeric coated substrates.

The single most important factor shaping demand for the industry is the consumer demand for new automobiles and trucks. In automobiles, the coated fabric products of SIC 2295 are used in headliners, seat coverings, dashboard panels, door inserts, hardtop coverings, carpet backings, and convertible tops. The bulk of all tire cord and fabric produced by SIC 2296 is used to manufacture tires sold as replacement tires or as original equipment with new automobiles, as are significant portions of the hoses and belts produced by SIC 3041. Even the output of SIC 3069 (Fabricated Rubber Products, Not Elsewhere Classified) and SIC 3293 (Gaskets, Packing, and Sealing Devices) are consumed by the automobile industry in the form of rubber motor mounts, exhaust system supports, tubing, washers, weather strip, gaskets, and oil seals.

TABLE 9-8. POLYMERIC COATING OF SUPPORTING SUBSTRATES: CONCENTRATION RATIOS FOR INDUSTRY SEGMENTS, 1977[a]

SIC Code	Industry/Segment/Product	Percent of output accounted for by the: 4 largest companies	8 largest companies	20 largest companies
2295	Coated Fabrics, Not Rubberized	37	52	69
22951	- Pyroxylin coated fabrics	86	97	100
22952	- Vinyl coated fabrics	53	68	86
22953	- Other coated fabrics	33	48	74
2296	Tire Cord and Fabrics	78	-	100
2394	Canvas and Related Products	17	26	40
3041	Rubber, Plastic-Hose and Belts	51	68	83
30411	- Flat belting	63	77	97
30412	- Other belts and belting	93	99	100
30413	- Rubber hose (hydraulic)	53	84	100
3069	Fabricated Rubber Products, N.E.C.	15	23	36
3069D	- Rubber coated fabrics	33	53	78
3293	Gaskets, Packing, and Sealing Devices	24	36	55

[a]Reference 8, pp. 147, 156, 189, 198.

The link between motor vehicle output and demand for the output of the affected industry may be seen by examining output levels for both industries. Table 9-9 lists the value of output estimated for the polymeric coating industry (see Table 9-3) along with indexes of output for both the motor vehicle industry and total U.S. industrial production, for the years 1973 through 1982. Correlation coefficients have been calculated to estimate the strength of the relationship between two pairs of output data: (1) polymeric coating industry output and motor vehicle output; and (2) polymeric coating industry output and total U.S. industrial production. The correlation coefficients show that industry demand is highly correlated with motor vehicle production, while there is very little correlation with total industrial production. It may therefore be concluded that the demand for polymeric coated substrates is probably a result of the demand for new motor vehicles.

9.1.4.2 Demand Elasticity. Quantitative estimates of demand elasticities are not available for the products whose manufacture may be affected by the NSPS. Because most of the products affected are intermediate or industrial products, estimates of demand elasticity are usually generated from confidential producer-sponsored research. Furthermore, the number of products involved, variations in product quality, and the high degree of captive consumption limit the availability of price and production data that could be used to estimate quantitative demand elasticities for this analysis.

On the basis of a qualitative assessment, however, it would appear that the elasticities of demand for the majority of products covered by the NSPS are probably low. There are three basic reasons for this conclusion: (1) there are not many substitutes for the affected products; (2) the affected products account for only a small portion of final product price; and (3) many of the final products incorporating polymeric coated substrates are necessities for which demand is relatively inelastic. Consequently because demand elasticities are low, small changes in the prices of the products affected by this NSPS will not prompt significant changes in the quantities demanded.

9.1.4.3 Determinants of Supply. The output of an industry is determined by the prices commanded by its products as well as by the

TABLE 9-9. CORRELATION BETWEEN POLYMERIC COATING INDUSTRY OUTPUT AND INDEXES OF MOTOR VEHICLE AND TOTAL U.S. INDUSTRIAL PRODUCTION

Year	Estimated polymeric coating industry output[a] ($ 1982 X10^{-6})	Motor vehicles production and parts[b] (1967 = 100)	Total industrial production[c] (1967 = 100)
1973	6,892.0	148.8	129.8
1974	6,445.6	128.2	129.3
1975	5,801.5	111.1	117.8
1976	6,252.6	142.0	130.5
1977	6,935.9	161.1	138.2
1978	7,147.8	169.9	146.1
1979	6,897.5	159.9	152.5
1980	5,757.0	119.0	147.0
1981	5,984.5	122.3	151.0
1982	5,781.3	109.8	138.6
Correlation coefficient with polymeric coating industry output		0.955	0.192

[a]Table 9-3.
[b]Reference 7, p. 212.
[c]Reference 7, p. 211.

availabilities and prices of labor, capital, and raw materials. To some extent, the importance of these factors in the decision to produce depends upon whether the producer is a captive or commission coater. In general, the captive coaters are those who coat with rubber and are part of SIC 2296 (Tire Cord and Fabric) or SIC 3041 (Rubber and Plastics Hose and Belting). SIC group 2295 (Coated Fabrics, Not Rubberized) is evenly split between captive and commission coaters.

Commission coaters may be more sensitive to fluctuations in intermediate product prices because they eventually sell the coated product rather than process it further into consumer products. Commission coaters generally operate on a job basis, negotiating price before the decision to produce.

Captive coaters, on the other hand, do not sell the basic coated product but process it further into some higher value product such as a tire, belt, hose, or motor vehicle interior. Because a sale is not made at the end of the coating process, no explicit product price is established at that point.

Several conditions characterize the availability of factors of production in this industry. First, firms tend to value the ability to manufacture their own raw materials. This is true for both captive and commission coaters, with firms in both groups manufacturing both the substrates and the polymers used in the coating. Among the benefits of this backward integration are increased control over quality, reduced risk of raw material shortages, and increased flexibility to experiment with new coating formulations and substrate types.[9]

Another important supply factor is the flexibility of the capital equipment used in various coatings processes. For example, coating equipment used in coating fabrics may be used in the manufacture of other products without extensive modification. Among the other products that may be manufactured are coated papers, films, and pressure-sensitive adhesive tapes.[10] Flexibility such as this has the effect of reducing barriers to entry, and thereby increasing the degree of competitiveness in the industry.

9.1.5 Foreign Trade

9.1.5.1 Imports. Presented in Table 9-10 are import data covering the period 1978-1982 for the three largest SIC segments of the polymeric coating industry: SIC 2295 (Coated Fabrics, Not Rubberized); SIC 2296 (Tire Cord and Fabric); and part of SIC 3041 (Rubber and Plastics Hose and Belting). In all segments, imports are small ranging from less than 0.1 to 2.5 percent of the value of domestic production.

With regard to SIC 2295, 1982 imports are valued at $22.8 million, or about 1.9 percent of domestic production of comparable products for the same year (see Table 9-3). The decline in imports from the preceding years is most likely a reflection of the recession rather than the onset of a long-term decline. There is some evidence of variations in import penetration for specific products; in particular, the ratio of imports to domestic production for urethane-coated fabrics is probably higher than that for other types of coated fabric.[16]

With regard to SIC 2296 (Tire Cord and Fabric), 1982 imports are valued at $1.5 million. While this level represents a significant increase over the levels for the preceding 4 years it represents less than 0.2 percent of 1982 domestic production.

Imports of belting and belts for 1982 are valued at $25.2 million, or less than 3 percent of domestic production. Because statistics for imported rubber hoses are not made available, it is assumed that such quantities are not significant relative to domestic production. Consequently, it appears that with the possible exception of urethane-coated fabrics, import penetration is not likely to significantly affect the ability of domestic producers to pass-through control related price increases.

9.1.5.2 Exports. Table 9-11 presents the annual value of exports for various polymeric-coated products, for the period 1978-1982. The data cover SIC 2295 (Coated Fabrics), SIC 2296 (Tire Cord and Fabric), SIC 2394 (Canvas Products), as well as parts of SIC 3041 (Rubber and Plastics Hose and Belting) and SIC 3069 (Fabricated Rubber Products, Not Elsewhere Classified). Comparison of this export data to the import data discussed above shows that the U.S. is a net exporter of the subject products.

TABLE 9-10. VALUE OF IMPORTS FOR POLYMERIC COATED PRODUCTS, 1978-1982

SIC Code	Product	Value of imports, $ 1982 X10^6				
		1978[a]	1979[b]	1980[c]	1981[d]	1982[e]
2295	Coated fabrics[f]	28.2	27.3	27.0	27.2	22.8
2296	Tire cord and fabrics[g]	0.2	0.3	0.2	0.5	1.5
30412A	Belting and belts[g]	26.0	30.0	25.2	21.7	25.2

[a]Reference 11.
[b]Reference 12.
[c]Reference 13.
[d]Reference 14.
[e]Reference 15.
[f]Adjusted to 1982 dollars by the Producer Price Index for textile products.
[g]Adjusted to 1982 dollars by the Producer Price Index for rubber products.

TABLE 9-11. VALUE OF EXPORTS FOR POLYMERIC COATED PRODUCTS, 1978-1982

SIC Code	Product	Value of exports, $ 1982 X10^6				
		1978[a]	1979[b]	1980[c]	1981[d]	1982[e]
2295	Coated fabrics[f]	96.5	117.9	104.9	102.1	77.7
2296	Tire cord and fabric[g]	75.1	93.6	163.4	111.4	80.3
2394	Canvas products[f]	7.8	16.0	7.5	15.0	9.7
30412A25	Conveyor belts[g]	18.0	24.6	18.8	17.1	15.7
30412A45	Motor vehicle belts[g]	22.7	22.1	19.5	19.8	19.8
30412A95	Machinery belts[g]	24.7	27.8	42.0	24.1	20.9
3069D0	Rubber coated fabrics[g]	53.3	51.3	75.3	70.6	63.1

[a]Reference 17.
[b]Reference 18.
[c]Reference 19.
[d]Reference 20.
[e]Reference 21.
[f]Adjusted to 1982 dollars by the Producer Price Index for textile products.
[g]Adjusted to 1982 dollars by the Producer Price Index for rubber products.

Exports of SIC 2295 exceeded 6 percent of total domestic production for 1982, while exports of SIC 2296 were more than 7 percent of total domestic production for the same year (see Table 9-3 for data on total domestic production). A high ratio of exports to domestic production is also observed for SIC 2394. Exports are an insignificant portion of the total output of all other products identified.

9.1.6 Industry Growth

Table 9-12 presents projected annual growth rates for selected final products manufactured from polymeric coated substrates. The rates range from a low of 3.0 percent for the printing and recreational equipment markets to a high of 12.1 percent for aircraft manufacturing. As noted earlier, the demand for the products of the polymeric coating industry is essentially derived from the consumer demand for the final products that incorporate polymeric coated substrates as inputs. It is difficult, however, to translate growth in final product demand into estimates of demand increases for the products of the polymeric coating industry. Complicating factors include: (1) style and technological changes that could alter the amounts of coated materials consumed in each product class; (2) the need to estimate the precise distribution of coated material consumption among all final product classes; and (3) the large number of final products for which growth rates would be required.

Nonetheless, an estimate of the growth rate of sales for the entire polymeric coating industry can still be made by recognizing that the demand for the industry's output is derived mainly from the demand for motor vehicles. As discussed in Section 9.1.4.1, annual output levels for the motor vehicles and polymeric coating industries are highly correlated. This correlation, together with projected domestic production of motor vehicles may be used to estimate future industry growth.

Table 9-13 lists output levels for both the motor vehicle and polymeric coating industries for 1973-1982. By applying linear regression to these output levels, output in the polymeric coating industry may be expressed as a function of motor vehicle production. The parameters of the function are specified by the equation:

$$\$ \text{ PCSS (millions)} = 3{,}188.43 + 20.93 \$ \text{ MV (billions)},$$

TABLE 9-12. PROJECTED ANNUAL GROWTH RATES FOR SALES OF SELECTED FINAL PRODUCTS MANUFACTURED FROM POLYMERIC COATED SUBSTRATES[a]

Product/Market	Growth rate, percent	Period
Automobiles	4.8	1980-1990
Aircraft	12.1	1982-1987
Conveyor belts	3.4	1983-1988
Flexible hoses	3.9	1982-1987
Printing	3.0	1983-1985
Protective clothing	5.0	1981-1990
Recreational equipment	3.0	1982-1987
V-Belts	3.3	1983-1988

[a]Reference 22.

TABLE 9-13. DATA USED TO DERIVE INDUSTRY FORECAST EQUATION

Year	Value of motor vehicle output[a] ($ current X 10^9)	Producer price index[b]	Value of motor vehicle output ($ 1982 X 10^9)	Value of polymeric coating industry output[c] ($ 1982 x 10^6)
1972	--	118.0	--	--
1973	74.61	119.2	157.29	6,892.0
1974	68.67	129.2	133.57	6,445.6
1975	70.21	144.6	122.02	5,801.5
1976	96.10	153.8	157.02	6,252.6
1977	118.01	163.7	181.16	6,935.9
1978	132.21	176.0	188.77	7,147.8
1979	132.70	190.5	175.05	6,897.5
1980	114.85	208.8	138.23	5,757.0
1981	137.42	237.6	145.71	5,984.5
1982	--	251.3	130.82[d]	5,781.3

[a]Reference 23.
[b]Producer Price Index for motor vehicles and equipment; Reference 24.
[c]Table 9-3.
[d]1982 value derived using motor vehicle production index from Table 9-9.

where:

$ PCSS = value of polymeric coating industry output, and

$ MV = value of motor vehicle industry output.

The coefficient of determination, or R^2, is 0.77, indicating that about 77 percent of the variation in polymeric coating output can be explained by variations in the production of motor vehicles.

Estimates of future output levels for the polymeric coating industry can be made using the above equation and forecasts of motor vehicle production. The estimates obtained are presented in Table 9-14 and show that the estimated value of output for 1990 is $7.2 billion (in 1982 dollars). This level represents an annual growth rate for the entire industry of 2.8 percent per year over the period from 1982 to 1990.

9.2 ECONOMIC IMPACT ANALYSIS

9.2.1 Introduction and Summary

The following sections present an evaluation of the economic impacts associated with the costs estimated to result from compliance with this NSPS. Economic impacts are discussed in terms of percentage cost and price changes along with qualitative evaluations of the implications of the estimated changes. The socioeconomic impacts of the proposed NSPS including inflationary, employment, and small business impacts are described in Section 9.3. As noted in that section, the fifth-year annualized costs of compliance with the most costly regulatory alternatives are $1.9 million. Such costs are well below the $100 million level that Executive Order 12291 specifies as one indicator of a major regulatory action.

With regard to price and cost increases, all regulatory alternatives other than Regulatory Alternative IV, which requires the incineration of captured VOC's, entail relatively small price and cost increases. For reasons outlined in the following sections, it is not expected that such cost and price increases will significantly affect either the demand for polymeric coated substrates, the production rates of firms that manufacture such products, or employment levels at such firms.

TABLE 9-14. PROJECTED VALUE OF ANNUAL OUTPUT FOR THE POLYMERIC COATING INDUSTRY, 1984-1990

Year	Projected value of motor vehicle output ($ 1972 X10^{-9})[a]	($ 1982 X10^{9})[b]	Projected value of polymeric coating industry output[c] ($ 1982 X10^{9})
1984	84.85	180.70	6.97
1985	84.28	179.49	6.94
1986	82.11	174.87	6.85
1987	90.70	193.16	7.23
1988	95.66	203.72	7.45
1989	94.79	201.87	7.41
1990	90.72	193.20	7.23

[a]Reference 25.
[b]Adjusted through price index of Table 9-13.
[c]Estimated through equation $ PCSS (millions) = 3,188.43 + 20.93 $ MV (billions).

9.2.2 Method

The method used to estimate potential economic impacts is based upon an analysis of both cost and price changes that could be prompted by the promulgation of this NSPS. The cost changes of concern are the incremental net annualized costs incurred by the firms that would operate new polymeric coating facilities. Price impacts refer to the extent to which coating line product prices are expected to change if all NSPS-related control costs, or in some cases cost savings, are passed to consumers.

Percentage cost changes are presented to provide an indicator of the relative magnitude of NSPS costs for model plants of various types and sizes under different levels of control. Price increases are estimated in order to provide an evaluation of the extent to which typical coating line product prices would be affected by the standard. Percentage cost increases are estimated by dividing incremental net annualized control costs by baseline annualized costs, while percentage price increases are approximated by dividing incremental net annualized control costs by the value of specific coating line products.

9.2.2.1 Cost Issues. The costs of concern in this analysis are the incremental costs associated with operating coating facilities under various NSPS control alternatives. Consequently, NSPS costs are measured as increments above the baseline control level, or that level of control required under State Implementation Plans. Baseline net annualized costs are calculated by combining uncontrolled annualized costs with the costs to control to the baseline level or Regulatory Alternative I. Thus, to derive baseline net annualized costs for coating lines using carbon adsorbers, the uncontrolled total annualized costs of Table 8-4 are added to the Regulatory Alternative I net annualized costs presented in Table 8-9.

For purposes of this analysis it is assumed that all model facilities will use carbon adsorber control systems rather than condensation systems, because the use of the former is most typical of the coating industry. Also the analysis is based upon the consideration of complete sets of facilities, that is, coating operations together with compatible coating preparation equipment and storage tanks. Finally, because each of the affected facilities can be controlled to one of several levels not all potential combinations of facilities and control levels are examined in

this analysis. For example, because coating operations could be controlled to one of four regulatory alternatives, while both coating preparation equipment and storage tanks could be controlled to one of three alternatives, 36 combinations of facility and control level would be possible. Therefore, in order to limit the number of situations examined, only those combinations that require each facility to be controlled above the baseline level (i.e. Regulatory Alternative I) are considered. Limiting the analysis in this way reduces the combinations of facility and control alternatives to the 12 noted in Section 9.2.3.

9.2.2.2 Price Impacts. In order to obtain an indication of the extent to which coating line product prices could be affected by the NSPS control costs, typical products of the model lines have been identified. The products of concern are in all cases intermediate products in that they require further processing before being used in their intended applications. Consequently, the prices for the products described below are approximations of the value of the coated product at the end of the coating stage of manufacturing.

The selection of typical products of the model lines is based upon four general criteria. First, the product selected should be manufactured through the application of a polymeric coating that is consistent with the model line parameters described in Chapter 6. Second, the market value of the product should adequately represent the value of all possible products that could be produced at the model line. Third, reliable price/value data should be available for the selected products. Fourth, the selected products should be expected to exhibit some growth in output over the next 5 years. Based upon these criteria, five products have been selected as being representative of the four model lines previously noted.

The model coating line "rubber-coated industrial fabric" is assumed to have two typical products, offset printing blankets and diaphragms. Printing blankets are used to transfer inked images from inking rollers to paper and in some cases metal. The resiliency of rubber printing blankets allows the use of a wide variety of paper thickness and texture. The printing blankets examined in the price increase estimates of Section 9.2.3.2 are specified as being based upon a 72-inch wide cotton substrate,

and are estimated to have a value of $16.57 per square yard when the coating process is completed. [26]

Diaphragms are constructed of rubber-coated nylon, and are used in a variety of industrial applications including valves and seals. Diaphragm valves are used to control the flow of slurries and corrosive fluids and for vacuum. Diaphragms are also used as seals in packless valves. The diaphragm material examined in the price analysis is based upon 48-inch wide nylon, and has an intermediate value of $7.52 per square yard.[27]

The products of urethane coating lines can vary in terms of coating thickness, substrate weight, and width. The product thought to be typical of the "urethane-coated fabric" model line is a 60-inch wide, 1.7-oz nylon coated fabric. A common use for such a product is in the construction of tents, but can also be used in other recreational equipment including footware and luggage. The product described above is estimated to have an intermediate value of $1.02 per square yard.[28]

V-belts are estimated to be typical of the "rubber-coated cord" model line. Such belts are used in a variety of power and motion transmission applications and are generally consumed by the automobile and industrial equipment industries. The rubber-coated polyester cord used to construct V-belts of various dimensions is estimated to have a value of about $2.60 per pound. [29]

The product selected as being typical of the model coating line "epoxy-coated fiberglass" is aircraft parts. Such parts are used in various applications by the military and aircraft construction industry, including interior moldings and panels, roof linings, and aircraft exteriors. The advantages of epoxy-coated fiberglass in these applications include its low weight and durability. It is estimated that the epoxy-coated product used to fabricate aircraft products has a value of about $3.75 per square yard. [30]

In order to evaluate the extent to which various regulatory alternatives could increase the prices of the coating line products noted above, the net annualized costs of such alternatives are expressed as percentages of the total revenue generated by production of each product at individual coating lines. These percentages are described in Section 9.2.3.2 along with some evaluation of the ability of individual firms to

pass through control-related price increases. The probability that price increases will be passed to the purchasers of the intermediate products described above is based upon a qualitative evaluation of the degree of competition among firms producing the affected products, the level of price increases needed, and the elasticity of demand for the affected products.

9.2.3 Analysis

9.2.3.1 Percent Cost Changes. As described in the previous section, the effects of the cost to meet various regulatory alternatives are described in terms of increased or decreased annualized costs as well as increased or decreased product prices. With regard to costs, percentage changes for each of the model lines are presented in Table 9-15. The changes summarized in that table are generated by finding the incremental net annualized control costs associated with meeting the appropriate regulatory alternatives, and expressing those costs as a percent of the baseline (i.e., Regulatory Alternative I) annualized costs for the same facilities. The following example shows how the 0.50 percent cost increase associated with the control of rubber-coated industrial fabric model coating line B, and the compatible mix preparation equipment and storage tank, to Regulatory Alternative III was estimated.

Net annualized incremental control costs to meet Regulatory Alternative III for the three facilities are determined by finding the difference between the net annualized cost to control the coating operation to Regulatory Alternative III (Table 8-11) and the cost to control the same line to the baseline level (Table 8-9). In this example, the incremental net annualized costs are $1,060. Because there are no costs to control coating preparation equipment and storage tanks to the Regulatory Alternative I baseline, the appropriate increments for these facilities are found in Tables 8-8 and 8-6, respectively. The appropriate increments in this example are $2,705 for coating preparation equipment and $3,418 for storage tanks. Thus the total net annualized incremental cost to control all three facilities to Regulatory Alternative III is $7,183.

With regard to baseline (Regulatory Alternative I) net annualized costs, such costs are determined for the three facilities by adding the uncontrolled annualized costs for the three facilities (Tables 8-2, 8-3,

TABLE 9-15. PERCENT COST INCREASES FOR MODEL PLANTS[a]

Regulatory alternative			Rubber-coated industrial fabric			Urethane-coated fabric		Rubber-coated cord		Epoxy-coated fiberglass	
Coating Operation	Coating Preparation	Storage Tank	A	B	C	B	C	A	B	B	C
II	II	II	0.00	-0.18	-0.34	-0.17	-0.20	0.00	-0.16	2.00	1.12
II	II	III	0.35	0.05	-0.21	-0.17	-0.20	0.31	0.04	2.06	1.16
II	III	II	0.64	0.15	-0.19	-0.17	-0.20	0.58	0.14	2.10	1.18
II	III	III	0.99	0.37	-0.05	-0.17	-0.20	0.89	0.34	2.17	1.21
III	II	II	0.27	-0.04	-0.35	-0.22	-0.29	0.25	-0.04	2.07	1.11
III	II	III	0.62	0.18	-0.21	-0.22	-0.29	0.56	0.16	2.13	1.15
III	III	II	0.92	0.28	-0.19	-0.22	-0.29	0.82	0.26	2.18	1.17
III	III	III	1.26	0.50	-0.06	-0.22	-0.29	1.13	0.46	2.24	1.20
IV	II	II	4.11	4.47	4.40	2.00	2.03	3.44	3.84	2.26	1.38
IV	II	III	4.46	4.69	4.54	2.00	2.03	3.75	4.04	2.33	1.42
IV	III	II	4.75	4.79	4.56	2.00	2.03	4.02	4.14	2.37	1.43
IV	III	III	5.10	5.01	4.69	2.00	2.03	4.33	4.34	2.44	1.47

[a]Assumes use of carbon adsorber for Regulatory Alternatives II and III, and incinerator for Regulatory Alternative IV.

and 8-4) to the Regulatory Alternative I costs for coating operations (Table 8-9). As noted previously, the baseline costs for coating preparation equipment and storage tanks are zero, consequently the total net annualized baseline costs for all three facilities are obtained through the addition of the uncontrolled net annualized costs for the coating operation ($1,302,340), coating preparation equipment ($86,410), and storage tank ($2,390), to the Regulatory Alternative I cost for the coating operation ($42,690), or a total of $1,433,830. Finally, the percentage increase in annualized cost attributable to Regulatory Alternative III is 0.50 percent (i.e. ($7,183/$1,433,830) x 100).

The percentage cost changes summarized in Table 9-15 are generally less than 1 percent with the exception of Regulatory Alternative IV for coating operations, and epoxy-coated fiberglass facilities under all regulatory alternatives. Regulatory Alternative IV increases are exceptionally high because this most stringent control option requires that all VOC emissions be incinerated, rather than captured and reused, thus eliminating product recovery credits. Epoxy-coated fiberglass facilities show relatively high cost increases because such coating operations do not require control equipment to meet Regulatory Alternative I emission limits. Consequently, the incremental costs of meeting more stringent emission levels are relatively high for these types of facilities.

9.2.3.2 Price Changes. As noted in Section 9.2.2.2, coating operation product price impacts are estimated by selecting a number of products that are typical of the output of the model plants described in previous sections. These products are summarized in Table 9-16, along with estimates of annual quantities capable of being produced at the appropriate model plants, estimates of product value at the end of the coating process and annual revenue estimates based upon the price and quantity levels noted. Specific product price increases are estimated through the expression of incremental net annualized costs as a percent of the revenues noted under various combinations of regulatory alternatives. These percentages are presented in Table 9-17.

The percent price increases estimated for the typical products of the rubber-coated industrial products model plant are generally less than one-half of 1 percent for all combinations of regulatory alternatives

TABLE 9-16. ANNUAL REVENUE ESTIMATES
FOR MODEL LINES PRODUCING TYPICAL PRODUCTS
(First Quarter 1984 Dollars)

Model coating line/product	Line/ size	Annual quantity produced (yd^2/yr)	Intermediate product value or price[a] ($/$yd^2$)	Annual revenue per coating line ($/yr)
Rubber-coated industrial fabric				
- Printing blankets[b] (72-inch wide cotton)	1A	137,508	16.57	2,278,510
	1B	222,616	16.57	3,688,750
	1C	445,230	16.57	7,377,460
- Diaphragms[c] (48-inch wide nylon)	1A	580,970	7.52	4,368,900
	1B	940,550	7.52	7,072,940
	1C	1,881,100	7.52	14,145,870
Urethane-coated fabric				
- Tent material[c] (60-inch wide, 1.7 oz nylon)	2B	13,091,480	1.02	13,353,310
	2C	26,199,140	1.02	26,723,120
Rubber-coated cord[b]				
- V-belts (polyester cord)	3A	193.1 tons/yr	2.60/lb	1,004,120
	3B	312.6 tons/yr	2.60/lb	1,625,520
Epoxy-coated fiberglass[b]				
- Aircraft parts (72-inch wide, 20 oz fiberglass fabric)	4B	1,512,112	3.75	5,670,420
	4C	3,024,224	3.75	11,340,840

[a]The product prices implied by the values reported here are based upon the review of confidential data supplied by manufacturers. However, where such values/prices can be compared to the product prices implied by the Census of Manufactures data summarized in Table 9-5 (i.e. rubber belts and cords, and urethane-coated tent fabric) the product prices reported by both sources are reasonably consistent.
[b]Reference 26.
[c]Reference 27.

TABLE 9-17. PERCENT PRICE INCREASES FOR TYPICAL PRODUCTS[a,b]

Regulatory alternative			Printing blankets			Diaphragms			Tents		V-belts		Aircraft parts	
CO[c]	CP[d]	ST[e]	A	B	C	A	B	C	B	C	A	B	B	C
II	II	II	0.00	-0.07	-0.11	0.00	-0.04	-0.06	-0.07	-0.08	0.00	-0.16	1.67	0.89
II	II	III	0.14	0.02	-0.07	0.07	0.01	-0.03	-0.07	-0.08	0.32	0.04	1.73	0.92
II	III	II	0.26	0.06	-0.06	0.14	0.03	-0.03	-0.07	-0.08	0.59	0.13	1.77	0.93
II	III	III	0.40	0.14	-0.02	0.21	0.07	-0.01	-0.07	-0.08	0.91	0.33	1.82	0.96
III	II	II	0.11	-0.02	-0.11	0.06	-0.01	-0.06	-0.10	-0.12	0.25	-0.04	1.73	0.88
III	II	III	0.25	0.07	-0.07	0.13	0.04	-0.04	-0.10	-0.12	0.57	0.16	1.79	0.91
III	III	II	0.37	0.11	-0.06	0.19	0.06	-0.03	-0.10	-0.12	0.84	0.25	1.83	0.92
III	III	III	0.51	0.19	-0.02	0.27	0.10	-0.01	-0.10	-0.12	1.16	0.44	1.88	0.95
IV	II	II	1.66	1.74	1.40	0.87	0.91	0.73	0.87	0.84	3.51	3.67	1.89	1.09
IV	II	III	1.80	1.82	1.45	0.94	0.95	0.75	0.87	0.84	3.83	3.86	1.95	1.12
IV	III	II	1.92	1.86	1.45	1.00	0.97	0.76	0.87	0.84	4.10	3.95	1.99	1.14
IV	III	III	2.06	1.95	1.50	1.07	1.02	0.78	0.87	0.84	4.42	4.15	2.04	1.16

[a]See Table 9-16 for specifications of products.
[b]Assumed use of carbon adsorber for Regulatory Alternatives II and III, and incerator for Regulatory Alternative IV.
[c]CO = Coating operation.
[d]CP = Coating preparation.
[e]ST = Storage tank.

with the exception of those that require the incineration of captured VOC's (i.e. Regulatory Alternative IV for coating lines). Price increases of this level are not considered to be significant, especially in light of the fact that there are no comparable substitutes for the printing blanket and diaphragm products, and that the prices for these products represent only a very small portion of the costs of the final products (i.e., printing and industrial process equipment) of which they are a part. Because these two conditions are indicative of inelastic demand, it is concluded that the price increases estimated will be paid by the consumers of the rubber-coated industrial products noted.

With regard to the tent material manufactured by the urethane-coated fabric model line, the cost decreases provided by the capture and recovery of solvents would allow price decreases for products produced from these lines. Therefore, it is not expected that any adverse demand-related consequences could result from the promulgation of control alternatives other than Regulatory Alternative IV.

If Regulatory Alternative IV is proposed for urethane coating lines, the incineration of VOC's could cause price increases of about 2-1/2 percent. The ability to pass through price increases of this level would be questionable, because the threat of foreign imports is most significant for urethane-coated fabrics.[31]

Price increases for the V-belt products manufactured at new rubber-coated cord lines are generally less than 1 percent for regulatory alternatives that capture and recover solvents. In these cases it is expected that price increases could be passed to the manufacturers and owners of motor vehicles who are the largest consumers of V-belt products. This conclusion is based upon the belief that demand elasticity for V-belts is very low because the products are necessities, with no substitutes, and such belts represent a very small portion of the total cost of the vehicles in which they are used.

Price increases for aircraft parts manufactured at epoxy-coated fiberglass lines are estimated to range from about 1 to 2 percent. Even though these percentages are generally higher than those estimated for the other affected products, the consuming industries that purchase these products can be expected to ultimately pay the required price increases.

The consuming industries in this case are the manufacturers of civilian and military aircraft that are eventually purchased by the Department of Defense, airlines and other private companies, and foreign governments. Low demand elasticities are most likely because the affected products have no substitutes that offer comparable combinations of weight and strength, and because the cost of the affected products are very small compared to the total cost of the aircraft in which they are used.

9.3 SOCIOECONOMIC AND INFLATIONARY IMPACTS

The analysis presented in Section 9.2 describes the effects that this NSPS could have upon prices and production costs of polymeric coated substrates. In this section the potential for more general economic impacts is discussed. Included among the issues addressed here are those required to be considered by Executive Order 12291 including inflation and employment impacts. Also addressed is the potential for small business impacts as required by the Regulatory Flexibility Act. These issues are considered after a review of the method by which the industry growth estimates of Section 9.1.6 are expressed in terms of new plant construction.

9.3.1 New Plant Construction

In order to project the total annualized costs of this NSPS during the fifth year after its proposal, an estimate of the number of new coating facilities that will be constructed over that period is needed. The basis for the projection of new facilities described below is the total industry annual growth estimates presented in Table 9-14.

The first step requires the estimation of the total value of output required of new solvent-based coating operations over the five-years including 1986 and 1990. The data summarized in Table 9-18 show that an estimate of $79 million (1982 dollars) in new output is obtained by observing the total output levels presented in Table 9-14, finding increments over full capacity output needed for each year, and modifying the annual increments by a factor to account for the general decline in solvent-based output. The full capacity levels noted in Table 9-18 are based upon the assumption that industrywide full capacity is defined by the highest annual output level observed during recent years. Table 9-3

TABLE 9-18. TOTAL VALUE OF NEW SOLVENT-BASED CAPACITY REQUIRED 1986-1990

Year	Total industry sales capacity[a] ($1982 x 10^9)	Current full capacity[b] ($1982 x 10^9)	Needed new capacity[c] ($1982 x 10^9)	Solvent use factor[d]	New solvent-based capacity ($1982 x 10^9)
1986	6.85	7.15	0.00	0.320	0.000
1987	7.23	7.15	0.08	0.288	0.023
1988	7.45	7.23	0.22	0.256	0.056
1989	7.41	7.45	0.00	0.224	0.000
1990	7.23	7.45	0.00	0.192	0.000
				5-year total =	0.079

[a]Table 9-14.
[b]Yearly values equal highest capacity observed during previous years.
[c]Positive difference between the total industry sales capacity and current full capacity.
[d]Derivation explained in Section 9.3.1.
[e]Needed new capacity times solvent use factor.

shows that before 1987 the highest industry output level was $7.15 billion, produced during 1978. This amount is assumed to represent full capacity until 1987 when the $7.23 billion estimated to be produced during that year becomes the new full capacity level.

The annual increments to capacity are modified by the solvent use factors noted to represent the reduced popularity of solvent-based coating methods due to solvent costs and environmental and health and safety concerns. The factors used have been obtained through the linear extrapolation of data indicating that in 1976 about 64 percent of all coated substrate products were produced through the use of solvents, while in 1981 this percentage declined to 48 percent.[32] Because it is expected that this trend will continue into the late 1980's the total value of output from new solvent-based capacity is estimated to be $79 million (1982 dollars). Finally, in order to allow comparison with the value of output from the model plants, this total is expressed in terms of first quarter 1984 dollars, through the use of the Producer Price Index for Industrial Commodities. Because this index stood at 272.8 in 1982, and 285.5 for for the first quarter of 1984, the total value of output from new solvent-based capacity is $83 million in first quarter 1984 dollars.[33,34]

The second step in the new plant projection method requires the estimation of the total value attributed to production from model plants. Because the industrywide total value amounts previously described include some value-added due to processing of coated products beyond the coating operation itself, some adjustment to the product values implied by the baseline model plant cost data of Chapter 8 is required, in order to put the plant output data on a comparable basis. For example, that portion of the total industry output projection that accounts for the production of V-belts, reports the value of the coating operation product (rubber-coated polyester cord) after it has been further processed into the V-belt product. Consequently, dividing the coating operation cost (or rubber-coated polyester cord product value) into the value of future demand for V-belt type products would tend to overstate the number of new lines needed to satisfy future demand. In order to adjust for this discrepancy, coating line product values, as estimated by the baseline costs of Chapter 8, are increased to account for additional processing

that coated products typically receive before their sale. Such increases have been made through the consideration of data reported in the 1982 Census of Manufacturers which indicates that for rubber fabric and rubber cord coating operations, the value of shipments by these companies typically exceed the cost of materials purchased by a 2 to 1 ratio. [35] [36] Furthermore, for all other fabric coating companies, including urethane fabric and epoxy fiberglass coating operations, the same ratio is 1.6 to 1. [37] Thus in order to quantify the value of shipments associated with the output of the model coating operations, the total raw material costs of the model lines presented in Table 8-4, are increased according to the appropriate ratios. The resulting values are then directly comparable to the new capacity dollar values presented in Table 9-18.

The final step in the new plant projection method entails the expression of the increased capacity requirements in terms of the number of new coating facilities. This is accomplished through the division of increased capacity requirements in terms of value of output ($83 million) by the total value of annual production from all model plants ($55 million). Therefore, assuming that new production would be distributed evenly among the model plants, approximately two of each of the nine model coating operations, coating preparation and storage tank facilities described in Chapter 6, would be needed to satisfy increases in demand over the next 5 years. Finally, because most coating line and related equipment is easily repaired and tends to have a long life expectancy, new plant construction related to the replacement of aged facilities is not considered by the method described above.

9.3.2 Executive Order 12291

As defined by Executive Order 12291,[38] "major rules" are those that are projected to have any of the following impacts:

- An annual effect on the economy of $100 million or more;
- A major increase in costs or prices for consumers, individual industries, federal, State, or local government agencies or geographic regions; or

- Significant adverse effects on competition, employment, investment, productivity, innovation, or on the ability of United States-based enterprises to compete with foreign-based enterprises in domestic or export markets.

9.3.2.1 Fifth-Year Annualized Costs. The estimation of fifth-year annualized costs, under the most costly regulatory alternatives, is presented in Table 9-19. The table shows that the highest cost regulatory alternatives would entail increased annualized costs of about $1.9 million, after all affected facilities are constructed. This amount is derived by taking the incremental net annualized costs required to meet the most costly alternatives and multiplying by the number of new facilities expected. It should be noted that this worst-case estimate of fifth-year annualized costs is well below the $100 million threshold specified by the Executive Order. If coating lines are controlled to Regulatory Alternative III, rather than IV as assumed above, fifth-year costs are reduced to about $413 thousand.

9.3.2.2 Inflationary Impacts. It is expected that the promulgation of this NSPS would have no effect upon the rate of inflation in the U.S. economy. Even at the industry level, price increases prompted by the fifth-year costs noted above would be imperceptable because the total annual value of the industry's output is expected to exceed $7 billion during future years.

9.3.2.3 Employment Impacts. The costs of compliance with this NSPS are not expected to have a measurable effect upon the level of employment in the polymeric coating industry. Employment impacts are unlikely because it is not expected that new plant construction will be adversely affected, nor will new plants operate at reduced rates which could warrant lower levels of employment.

9.3.2.4 Balance of Trade Impacts. For most of the products affected by this NSPS, the level of foreign trade is relatively low (see Section 9.1.5). This fact together with the very small cost/price increases previously noted, indicates that significant effects upon the U.S. balance trade are unlikely. For the urethane-coated products, where imports could increase even in the absence of this standard, domestic

TABLE 9-19. SUMMARY OF FIFTH-YEAR ANNUALIZED COSTS UNDER MOST COSTLY REGULATORY ALTERNATIVES[a]
(First Quarter 1984 Dollars X10^3)

Product type/ line size	Net annualized cost per facility: Coating operation	Coating preparation	Storage tank	Number of new facilities[b]: Coating operation	Coating preparation	Storage tank	Total net annualized cost
Rubber-coated industrial fabric							
A	38.60	4.87	3.43	2	2	2	93.80
B	65.75	2.71	3.42	2	2	2	143.76
C	107.23	-0.13	3.38	2	2	2	220.96
Urethane-coated fabric							
B	116.43	-	-	2	-	-	232.86
C	225.18	-	-	2	-	-	450.36
Rubber-coated cord							
A	36.04	4.87	3.43	2	2	2	88.68
B	61.26	2.71	3.42	2	2	2	134.78
Epoxy-coated fiberglass							
B	109.76	2.64	3.41	2	2	2	231.62
C	128.62	0.06	3.35	2	2	2	263.82
						Total =	1,860.64

[a]Coating operations controlled to Regulatory Alternative IV, other facilities controlled to Regulatory Alternative III.
[b]Number of new facilities needed to satisfy demand over next five years as described in Section 9.3.1.

product prices should not be increased by this NSPS. Consequently, the standard will not prompt an increase in such imports.

9.3.2.5 Impacts Upon Investment, Productivity, and Innovation. It is expected that the relatively low costs of compliance with this NSPS will not affect investment, productivity, or innovation in the solvent-based portion of the polymeric coating industry. Although there has been a noted trend away from the use of solvents in the industry, this trend is not expected to be compounded by the costs described above. This is apparently so because while the use of solvents by the industry declined about 25 percent from 1976 to 1981 (see Section 9.3.1) the cost of those solvents increased approximately 300 percent. Consequently, it appears that the use of solvents may be relatively insensitive to small changes in solvent prices, or the costs of using such solvents in coating processes. This is especially true of the minor cost changes previously noted. Instead, it may be more likely that if the general trend away from solvent use continues it may be a result of a combination of factors including: technical improvements in alternative coating methods, concern for worker health and safety, and uncertainty regarding the continuous availability of solvent supplies.

9.3.3 Small Business Impacts and the Regulatory Flexibility Act.

The Regulatory Flexibility Act stipulates that if a proposed rule is likely to have a significant economic impact on a substantial number of small entities, the proposing agency must, among other things, prepare an Initial Regulatory Flexibility Analysis. In response to this requirement, EPA has developed guidelines defining what is meant by a "significant economic impact" and a "substantial number."[39] A significant impact is said to exist whenever any of the following criteria are satisfied: (1) annual compliance costs increase total production costs for small entities by more than 5 percent; (2) compliance costs as a percent of sales for small entities are at least 10 percentage points higher than compliance costs as a percent of sales for large entities; (3) capital costs of compliance represent a significant portion of capital available to small entities, considering internal cash flow plus external financing capabilities; or (4) the requirements of the regulation are likely to result in closures of small entities. A substantial number is defined as

being achieved if more than 20 percent of the affected small entities are subject to significant economic impact.

A given polymeric coating company will only be affected by this NSPS if it either constructs new facilities, or modifies or reconstructs existing facilities. As discussed in Section 9.3.1, it is anticipated that over the period 1986-1990, a total of 18 polymeric coating plants will become subject to the NSPS. The projected distribution by plant size and type are noted in Table 9-19.

In this analysis, the question of what constitutes a small business was resolved using business size criteria developed by the U.S. Small Business Administration. According to these criteria, a firm in SIC group 2295 is classified as small if it has fewer than 1,000 employees. The cutoff for SIC groups 3041 and 3069 is 500 employees.[40] Given these employment sizes, it is conceivable that even the large plants could be owned by small firms. In the extreme case, then, as many as 18 small businesses could be affected by the NSPS.

As the analysis in Section 9.2 indicates, however, the economic impacts on the plants are likely to be insignificant in nearly all cases. The only exception is in the case of Regulatory Alternative IV, where the percentage increase in production cost due to compliance can exceed 5 percent in two cases. In all other situations, cost increases are well below 5 percent.

9.4 REFERENCES FOR CHAPTER 9

1. U.S. Bureau of the Census. 1982 Census of Manufactures -- Preliminary Report: Coated Fabrics, Not Rubberized. MC82-I-22F-5(P). May 1984.

2. U.S. Bureau of the Census. 1982 Census of Manufactures -- Preliminary Report: Tire Cord and Fabric. MC82-I-22F-6(P). July 1984.

3. U.S. Bureau of the Census. 1982 Census of Manufactures -- Preliminary Report: Canvas and Related Products. MC82-I-23E-4(p). April 1984.

4. U.S. Bureau of the Census. 1982 Census of Manufactures -- Preliminary Report: Rubber and Plastics Hose and Belting. MC82-I-30A-4(P). June 1984.

5. U.S. Bureau of the Census. 1982 Census of Manufactures -- Preliminary Report: Fabricated Rubber Products, N.E.C. MC82-I-30A-5(P). February 1984.

6. U.S. Bureau of the Census. 1982 Census of Manufactures -- Preliminary Report: Gaskets, Packing and Sealing Devices. MC82-I-32E-3(P). April 1984.

7. Economic Report of the President. Washington, D.C., U.S. Government Printing Office. February 1983. p. 163.

8. U.S. Bureau of the Census. 1977 Census of Manufactures -- Concentration Ratios in Manufacturing. MC77-SR-9. May 1981.

9. Frost and Sullivan, Inc. Flexible Coated and Laminated Materials and Products Market in the United States. New York. Spring 1982. p. 18.

10. Reference 9, pp. 16-17.

11. U.S. Bureau of the Census. U.S. Imports/Consumption and General, SIC-Based Products by World Areas. FT210/Annual 1978. 1979. Table 1.

12. U.S. Bureau of the Census. U.S. Imports/Consumption and General, SIC-Based Products by World Areas. FT210/Annual 1979. 1980. Table 1.

13. U.S. Bureau of the Census. U.S. Imports/Consumption and General, SIC-Based Products by World Areas. FT210/Annual 1980. 1981. Table 1.

14. U.S. Bureau of the Census. U.S. Imports/Consumption and General, SIC-Based Products by World Areas. FT210/Annual 1981. 1982. Table 1.

15. U.S. Bureau of the Census. U.S. Imports/Consumption and General, SIC-Based Products by World Areas. FT210/Annual 1982. 1983. Table 1.

16. Reference 9, p. 23.

17. U.S. Bureau of the Census. U.S. Exports/Domestic Merchandise, SIC-Based Products by World Areas. FT610/Annual 1978. 1979. Table 1.

18. U.S. Bureau of the Census. U.S. Exports/Domestic Merchandise, SIC-Based Products by World Areas. FT610/Annual 1979. 1980. Table 1.

19. U.S. Bureau of the Census. U.S. Exports/Domestic Merchandise, SIC-Based Products by World Areas. FT610/Annual 1980. 1981. Table 1.

20. U.S. Bureau of the Census. U.S. Exports/Domestic Merchandise, SIC-Based Products by World Areas. FT610/Annual 1981. 1982. Table 1.

21. U.S. Bureau of the Census. U.S. Exports/Domestic Merchandise, SIC-Based Products by World Areas. FT610/Annual 1982. 1983. Table 1.

22. Predicasts. Forecast Abstracts 1983. pp. 80, 140, 251, 357, 358, 539, 552, 579.

23. Wharton Econometric Forecasting Associates. Industry Planning Service - Historical Review. May 1982. p. A-76.

24. Reference 7. p. 231.

25. Wharton Econometric Forecasting Associates. Industry Planning Service - Ten-Year Outlook. Volume 3. Number 5. May 1984. p. D-24.

26. Letter from Friedman, E.M., MRI, to Costello, T.V., JACA Corp. October 2, 1984.

27. Letter from Banker, L.C., MRI, to Costello, T.V., JACA Corp. February 13, 1985.

28. Reference 27.

29. Reference 26.

30. Reference 26.

31. Reference 9, p. 23.

32. Reference 9, p. 22.

33. U.S. Bureau of Labor Statistics. Monthly Labor Review. December 1983. p. 90.

34. U.S. Bureau of Labor Statistics. Monthly Labor Review. October 1984. p. 80.

35. Reference 5, p. 3.

36. Reference 4, p. 3.

37. Reference 1, p. 3.

38. The President. Executive Order 12291 - Federal Regulation. Federal Register. February 19, 1981. p. 13193.

39. Memo from Administrator, EPA, to Associate Administrators, Assistant Administrators, Regional Administrators, and Office Directors. February 9, 1982. EPA Implementation of the Regulatory Flexibility Act.

40. U.S. Small Business Administration. Small Business Size Standards. Federal Register. February 9, 1984. pp. 5023-5048.

APPENDIX A
EVOLUTION OF THE BACKGROUND INFORMATION DOCUMENT

The purpose of this study was to develop a basis for new source performance standards (NSPS) for industries that perform polymeric coating of supporting substrates. To accomplish the objectives of this program, technical data were acquired on: (1) solvent storage tanks, coating preparation equipment, and coating operations; (2) the release and controllability of organic emissions into the atmosphere by these sources; and (3) the types and costs of demonstrated emission control technologies. The bulk of the information was gathered from the following sources:

- Technical literature
- State, regional, and local air pollution control agencies
- Plant visits
- Industry representatives
- Engineering consultants and equipment vendors
- Emission source testing data

Significant events relating to the evolution of the BID are itemized in Table A-1.

TABLE A-1. EVOLUTION OF THE BACKGROUND INFORMATION DOCUMENT

Date	Company, consultant, or agency/location	Nature of action
06/16/83	Reeves Brothers, Inc. Buena Vista, Va.	Plant visit
06/21/83	The Kenyon Piece Dyeworks, Inc. Kenyon, R.I.	Plant visit
06/22/83	Aldan Rubber Company Philadelphia, Pa.	Plant visit
06/29/83	Burlington Industrial Fabrics Kernersville, N.C.	Plant visit
09/15/83	U. S. EPA Research Triangle Park, N.C.	Memo authorizing Phase II--"Draft Development of New Source Performance Standards for Elastomeric Coating of Fabrics"
10/24/83	The Gates Rubber Company Denver, Colo.	Plant visit
10/25/83	Murray Rubber Company Houston, Tex.	Plant visit
10/26/83	Utex Industries, Inc. Weimar, Tex.	Plant visit
11/02/83	Victor Products Division Dana Corporation Chicago, Ill.	Plant visit
11/03/83	Dayco Corp. Three Rivers, Mich.	Plant visit
01/27/84	The Bibb Company Macon, Ga. Chemprene, Inc. Bacon, N.Y. W. R. Grace and Company Lexington, Mass.	Section 114 information request

(continued)

TABLE A-1. (continued)

Date	Company, consultant, or agency/location	Nature of action
	Hexcel Corp. Dublin, Calif.	
	Kellwood Company New Haven, Mo.	
	Nylco Corp. Nashau, N.H.	
	ODC, Inc. Norcross, Ga.	
	Ferro Corp. Cleveland, Ohio	
02/03/84	The Amerbelle Corp.	Section 114
	Rockville, Conn.	information request
04/03/84	ODC, Inc. Norcross, Ga.	Plant visit
07/10-19/84	Plant B	Emission test
08/17/84	U. S. EPA Research Triangle Park, N.C.	Change of scope and name of project to "Polymeric Coating of Supporting Substrates"
09/09/84	The Bibb Company Macon, Ga.	Revised Section 114 information request
09/123/84	Plant C	Emission test
09/20/84	Mailed to industry members, selected equipment vendors, and consultants	Advance Notice of Proposed Rule
09/28/84	Mailed to industry members, selected equipment vendors, and consultants	Request for comment on draft BID Chapters 3, 4, 5, and 6
10/26/84	Mailed to industry members, selected equipment vendors, consultants	Request for comment on draft BID Chapter 8 and

(continued)

TABLE A-1. (continued)

Date	Company, consultant, or agency/location	Nature of action
01/12/85	U.S. Polymeric Santa Ana, California	Plant visit
01/15/85	Narmco Materials Anaheim, California	Plant visit
01/16/85	Fiberite Corp. Orange, California	Plant visit
01/17/85	Hexcel Corp. San Francisco, California	Plant visit
05/31/85	Mailed to members of the Working Group	Working Group mailout
08/08/85	Mailed to members of the Steering Committee	Steering Committee mailout
09/18/85	U.S. EPA and industry representatives	NAPCTAC Meeting
10/29/85	Mailed to members of Red Border review	Red Border review

APPENDIX B
INDEX TO ENVIRONMENTAL IMPACT CONSIDERATIONS

This appendix consists of a reference system which is cross-indexed with the October 21, 1974, Federal Register (39 FR 37419) containing the Agency guidelines concerning the preparation of environmental impact statements. This index can be used to identify sections of the document which contain data and information germane to any portion of the Federal Register guidelines.

TABLE B-1. CROSS-INDEXED REFERENCE SYSTEM TO HIGHLIGHT ENVIRONMENTAL IMPACT PORTIONS OF THE DOCUMENT

Agency guidelines for preparing regulatory action environmental impact statements (39 FR 37419)	Location within the Background Information Document
1. BACKGROUND AND SUMMARY OF REGULATORY ALTERNATIVES	
Summary of regulatory alternatives	The regulatory alternatives from which standards will be chosen for proposal are summarized in Chapter 1, Section 1.1.
Statutory basis for proposing standards	The statutory basis for proposing standards is summarized in Chapter 2, Section 2.1.
Relationship to other regulatory agency actions	The relationships between EPA and other regulatory agency actions are discussed in Chapters 3, 7, and 8.
Industry affected by the regulatory alternatives	A discussion of the industry affected by the regulatory alternatives is presented in Chapter 3, Section 3.1. Further details covering the business and economic nature of the industry are presented in Chapter 9, Section 9.1.
Specific processes affected by the regulatory alternatives	The specific processes and facilities affected by the regulatory alternatives are summarized in Chapter 1, Section 1.1. A detailed technical discussion of the processes affected by the regulatory alternatives is presented in Chapter 3, Sections 3.2 and 3.3.
2. REGULATORY ALTERNATIVES	
Control techniques	The alternative control techniques are discussed in Chapter 4.

(continued)

TABLE B-1. (continued)

Agency guidelines for preparing regulatory action environmental impact statements (39 FR 37419)	Location within the Background Information Document
Regulatory alternatives	The various regulatory alternatives are defined in Chapter 6, Section 6.2. A summary of the major alternatives considered is included in Chapter 1, Section 1.1.
3. ENVIRONMENTAL IMPACT OF THE REGULATORY ALTERNATIVES	
Primary impacts directly attributable to the regulatory alternatives	The primary impacts on mass emissions and ambient air quality due to the alternative control systems are discussed in Chapter 7, Sections 7.1, 7.2, 7.3, 7.4, and 7.5. A matrix summarizing the environmental impacts is included in Chapter 1.
Secondary or induced impacts	Secondary impacts for the various regulatory alternatives are discussed in Chapter 7, Sections 7.1, 7.2, 7.3, 7.4, and 7.5.
4. OTHER CONSIDERATIONS	A summary of the potential adverse environmental impacts associated with the regulatory alternatives is included in Chapter 1, Section 1.2, and Chapter 7. Potential socio-economic and inflationary impacts are discussed in Chapter 9, Sections 9.2 and 9.3.

APPENDIX C
EMISSION SOURCE TEST DATA

The emission source test data presented here were obtained from EPA-sponsored testing at a polymeric coating plant and related web coating facilities and from industry records of solvent recovery efficiencies.

C.1 EPA-SPONSORED TESTS AT POLYMERIC COATING PLANTS

C.1.1. Plant B

Tests were conducted at Plant B to determine (1) the total volatile organic compound (VOC) reduction efficiency of a single polymeric coating operation and (2) the control efficiency of a fixed-bed carbon adsorber system.

Plant B manufactures gaskets, diaphragms, and seals used by the oil industry. Rubber-coated cord and fabric are produced as the first step in the manufacturing process. During the test series, a single solvent, methyl ethyl ketone (MEK), was used for the preparation of rubber coatings and equipment clean-up. The coating used was a formulation of 82 percent MEK and 18 percent synthetic rubber, by weight. Figure C-1 is a schematic of solvent/process flow at Plant B.

A continuous web of fabric is fed from a roll into the dip vat located 2 to 3 feet prior to entering the vertical tower drying oven. The coated fabric enters the drying oven through an opening above the dip vat and travels between air plenums. Make-up air for the oven is furnished from louvered openings in the oven air-recirculation loop, web entrance and exit slots, and any leaks through the door seals in the oven. These doors are frequently opened to observe and adjust the coated fabric.*

*A telephone survey of the industry showed that the opening of oven doors during operation is highly unusual.

The dip vat is surrounded by a total enclosure that has viewing windows on three of the four sides. The enclosure is maintained under negative pressure with respect to the coating room by virtue of the draft created by the drying oven. Air enters the enclosure through the web entrance slot and presumably through any leaks in the doors.

The drying oven is maintained under negative pressure relative to the dip vat enclosure; hence, room air drawn into the enclosure is in turn drawn into the drying oven. Solvent vapors from the fabric coater drying oven, the cord coater drying oven, the enclosure, and the scrap solids bake oven are ducted to a carbon adsorption system.

Figure C-2 shows the locations of continuous or discrete-stream VOC concentration/content and flow rate measurements made during the test program. Table C-1 lists process parameters monitored during source testing.

C.1.1.1 Valid Test Data.

C.1.1.1.1 Carbon adsorber efficiency. Process parameters for the fixed-bed carbon adsorption system are presented in Table C-2. This system features continuous regeneration using high-temperature nitrogen. The carbon adsorber produces a recovered solvent/water stream that is continually delivered to a recovery tank. Based on plant process instrumentation, the carbon adsorber typically operates at 98-percent efficiency, which decreases with increasing carbon service life. Expected useful carbon life is 6 to 9 months.

During the 4-day test period, the carbon adsorber inlet VOC concentration was monitored by a method similar to EPA Method 25A. The analysis was performed by a Byron Model 401 THC analyzer. Gas flow rate to the carbon adsorber was measured according to EPA Method 2. The exhaust air from the carbon adsorber was monitored for VOC concentration by a method and procedure similar to that used for the carbon adsorber inlet. It was not possible to perform a velocity traverse on the carbon adsorber outlet due to the configuration of the exhaust stack. However, the outlet flow was estimated by adding the lift airflow rate (based on design data) to the measured inlet flow.

1. Two methods were used to estimate the amount of solvent applied to the web. However, both the methods have some inherent problems such that accurate and reliable measurement was not possible. The first technique of using dipstick measurements in the dip tanks does not permit accounting for the coating which is being applied to the web simultaneously as the dip tank is being filled. Thus, this procedure underestimates the amount of solvent applied. The second technique compares the amount of liquid solvent introduced to the mix equipment at the beginning of every batch (perhaps 1 to 2 days before the coating is used in the process) with unused coatings introduced to the bake oven after every batch is completed and assumes that the difference is the solvent applied to the web. This methodology assumes no losses take place during mixing, transfer, and holding which we know to be unrealistic. Thus, this method is also suspect.

2. The reported capture efficiency is dependent on a valid correlation between gaseous and liquid material balance. The EPA's attempt to perform such a balance under ideal conditions in laboratory experiments showed results that varied by as much as ±10 percent. One would expect much greater error than 10 percent under field measurement conditions.

3. The solvent inleakage at the floor level is not accounted for, and, as a result, it is reasonable to expect that the recovery efficiency would be biased high.

4. The recovered solvent was stored in a large (7,000 gallon) tank where the inherent error in measurement was equal to the change in liquid level that was being measured. Another complicating aspect of measuring the recovered solvent is that the liquid in the solvent recovery tank was assumed to be MEK with a small amount of dissolved water. A potentially major flaw in this assumption is that the liquid in the tank (as recovered from the adsorber) in reality contains two immiscible liquid phases: a solvent layer containing 12 percent water and a water layer containing 27 percent MEK (assuming the phases are at equilibrium, i.e., saturation). The test procedure did not account for any phase distribution. The magnitude of this error is not known, but it is known that the water-solvent phase is large enough to justify intermittent (about once a month) use of distillation column to recover solvent.

For convenience, Table C-5 presents test results for capture, control, and total control efficiencies. However, the information in this table should not be used.

C.1.1.2.2 Plant data. Liquid solvent flows of applied and recovered captured solvent are routinely measured and recorded by plant personnel and were used to estimate total VOC reduction (recovery) efficiency. Table C-6 presents total VOC reduction efficiency for a single fabric coating line using plant data. Total VOC reduction efficiency data for the entire test period as determined by the two methods differed considerably--83 percent for the test data compared to 60 percent for the plant data. Larger variations (26 to 176 percent) in batch-to-batch efficiency values were evident in the plant data than from EPA test data (49 to 100 percent). Measurement error was inherent in the plant data efficiency values with the major source of error attributed to the quantity of recovered solvent and the amount of solvent applied at the coating applicator because the fugitive emissions from mixing, transfer and storage of coatings were not accounted for.

C.1.2 Plant C

The EPA conducted tests at Plant C to measure VOC emissions from two mix tanks. Figure C-3 shows the general process schematic for Plant C and for the N-line coating room. The figure also identifies the slurry and gas sampling location for the tests.

At this plant, all coatings are formulated at the plant site. This is done in batch mix tanks located in an area designated as the mix tower. In the mix tower, the typical coating mix operation consists of charging a steam-jacketed mix tank with a solvent, a solid polymer resin, a pigment, and various additives. The mix tank is then closed, and the polymer slurry is mixed with a shear mixer for 2 to 3 hours. Solvent that vaporizes from the mixture is vented from the mix tank to the atmosphere through an exhaust stack. At the end of the mix period, the slurry is discharged to a holding tank. Solvent is used to wash the mix tank and this increases the quantity of solvent in the slurry.

In the holding tank, the polymer slurry is pumped to a dip tank where it is applied to a cotton or polyester web. The level of slurry in the dip tank remains at a constant level while the level in the hold

tank goes down as the coating is applied. In both the hold and dip tanks, additional solvent may be added by the operators to maintain proper coating viscosity. From the N-line dip tank, the polymer-coated web travels through a heated, nitrogen-atmosphere dryer. From here, the dried coated fabric is rolled to await processing into a final product.

Emissions from the mix tanks were calculated from stack gas analysis results and from liquid material balance. The results of the liquid material balance show a gain of solvent with time instead of the expected loss of solvent with time due to evaporation, thus invalidating these results. Because the measured VOC emissions vary drastically for the two methods, the validity of all of the collected data is questionable. Therefore, no data were approved for use in setting a standard for polymeric coating. The collected test data are presented in Table C-7. However, the information in this table should not be used.

C.2 EPA-SPONSORED TESTS FOR RELATED INDUSTRIES

The emission source test data presented here were obtained from EPA-sponsored testing at three plants in related web-coating industries.

C.2.1 Pressure-Sensitive Tape and Label Plant

The EPA conducted tests at plants in the pressure-sensitive tape and label (PSTL) industry. This is an industry with coating and control processes very similar to those used in the polymeric coating of supporting substrates. In both types of plants, a solvent-borne coating is applied to a continuous supporting web. Fixed-bed carbon adsorbers are control devices used in both types of plants and similarly designed total enclosures around the coating application/flashoff area are used to capture fugitive VOC emissions. The following paragraphs describe relevant test data from the PSTL industry.

One PSTL facility was examined over a 4-week period (January 15, 1979, to February 9, 1979). The facility consists of four adhesive coating lines controlled by a single carbon adsorption system. There are three lines that are each 28-inches wide, and one line that is 56-inches wide. The plant operation is characterized by many short runs at slow line speeds. Table C-8 summarizes the operations of each line and the total system. This facility is an example of a hard to control

facility because slow coating lines are the most difficult-to-control (e.g., they have the greatest potential for fugitive VOC emissions).

The makeup air for the ovens is pulled directly from the work area. The building that houses the four coaters is tight enough to allow a slight negative pressure in the work area as compared to the outside of the building. Also, there is a slight negative pressure in the coater ovens with respect to the room air. With a fully enclosed, tight system, the overall result is that all makeup air flows into the building, through the oven, and out to the carbon adsorption system. Therefore, essentially 100 percent of all solvent emissions are captured. The facility also uses hoods over the coater areas to capture fugitive solvent emissions near the coating applicator. Ductwork directs hood gases into the drying oven.

During the 4-week test period, the controlled facility used 28.7 m^3 (7,589 gallons) of solvents in its adhesive formulations and recovered 26.7 m^3 (7,065 gallons) from the carbon adsorption system. This represents an overall VOC control of 93.1 percent. The system performed 140 separate runs and used the following solvents: toluene, acetone, hexane, ethyl acetate, MEK, rubber solvent, heptane, recovered solvents, xylene, ethyl alcohol, and isopropanol.

C.2.2 Publication Rotogravure Printing

Plants in the publication rotogravure industry are similar to polymeric coating plants in that solvent-borne coatings are applied to a continuous web of supporting material. The percent of VOC contained in typical coatings used at plants in this industry are within the range of coating formulations used at polymeric coating facilities. Fixed-bed carbon adsorbers are control devices used in both types of plants.

The EPA conducted tests on the two newest presses (presses 505 and 506) at the Meredith/Burda, Incorporated, plant during the week of December 11 to 16, 1978. This plant uses toluene as the printing solvent. A cabin-like structure encloses the top one-third of each printing press; thus, a partial enclosure system captures fugitive VOC emissions from the application/flashoff area. The captured solvent laden air is directed along with the dryer exhaust to the carbon adsorption system.

Table C-9 summarizes the process operation data. During the tests, VOC measurements were made at both the inlet and outlet of the carbon adsorbers. In this industry, bulk inks (coatings) are purchased from an outside manufacturer and then diluted with additional solvent prior to application. Mixed (diluted) ink samples were obtained from each of the eight feed tanks on each press for determination of the toluene content. The solvent content of the bulk (undiluted) inks was obtained from the ink manufacturer.

This plant was revisited during January 22 to 24, 1980, for supplemental measurements. The supplemental measurements showed that some air containing 60 to 70 ppmv toluene vapors is drawn into the newest pressroom from other pressrooms and plant areas. This infiltration of toluene vapors could have inflated the overall solvent recovery results by about 3 percent. This estimate is based on the assumption that the infiltrated toluene vapors were generated from other printing facilities. In addition, the temperature correction factor was estimated to be 2 percent.

Table C-10 summarizes the overall coating line efficiency and the carbon adsorber efficiencies. The overall efficiencies were determined from liquid meter readings and were adjusted by 5 percent to account for VOC infiltration and temperature correction for solvent volume. The short term test data (8.5 to 9 h) show carbon adsorber efficiency of 97 to 99 percent and an overall recovery efficiency of 90 to 97 percent. The 51.5- and 78-hour material balance show an overall recovery efficiency of 89 and 88 percent, respectively. The carbon adsorber efficiency during the 78-hour material balance was 99 percent. The long-term monthly data obtained from the plant indicate overall plant-wide recovery efficiency of 84 to 91 percent.

C.2.3 Flexible Vinyl Coating and Printing Operations (FVCP)

Plants in the FVCP industry are similar to polymeric coating plants in that solvent-borne coatings are applied to a continuous web of supporting material. The percent of VOC contained in typical coatings used in this industry are within the range of coating formulations used in polymeric coating facilities. Fixed-bed carbon adsorbers are control devices used in both the industries.

The EPA conducted tests at the General Tire and Rubber Company plant in Reading, Massachusetts, during March 18-26, 1981. The plant produces vinyl coated fabric. The print line tested is housed in a separate room in the plant. The line contains six print stations and an inline embosser.

The print line VOC emissions are captured by a hooding system that directs the captured emissions into the individual print head ovens. The capture emissions from the ovens are controlled by a carbon adsorption system.

The print room's ventilation system consists of a wall exhaust fan, a room air supply fan, a carbon adsorption inlet fan, an embosser exhaust fan, and several open doorways. During the tests, all the doorways were closed and the room air supply fan was off. The use of the wall exhaust fan was limited and the print line was always down during operation of this fan.

The VOC emission capture system is considered a partial enclosure because some air from the enclosed room is used as the process air for embosser and is eventually exhausted to the atmosphere.

The test program consisted of two phases: Phase 1, determination of capture efficiency and Phase 2, determination of carbon adsorption control device efficiency. The tests required only gaseous VOC measurements. During Phase 1, emissions were measured continuously at three sites: carbon adsorber inlet, wall fan exhaust, and embosser exhaust. Periodic VOC measurements at the embosser air intake were also taken. During Phase 2, VOC measurements were made at both the inlet and outlet to the carbon adsorber. Ambient VOC concentration measurements around the embosser inlet were continued to obtain further data on capture efficiency.

A summary of the capture efficiency results obtained during the tests is shown in Table C-11. The capture efficiency ranged from 90 to 94 percent and averaged 92 percent. A summary of the carbon adsorption control device efficiency data is presented in Table C-12. Carbon adsorption control device efficiencies ranged from 98.5 to 99.6 percent and averaged 99 percent. However, the carbon adsorption system was not operating at design conditions during the tests. The system, which had

been on-stream for only a week prior to the test, operated only 8 hours a day. At the end of each day, the beds were regenerated twice to minimize the possibility of bed fires during the next day's startup. Therefore, these carbon adsorption efficiencies may be somewhat higher than would be expected under design conditions.

C.3 PLANT-WIDE SOLVENT RECOVERY EFFICIENCIES AT POLYMERIC COATING PLANTS

The EPA implemented plant-wide solvent recovery recordkeeping programs at three polymeric coating plants. The plant-wide solvent recovery efficiency accounts for all the VOC emissions sources in the plant, which includes coating lines, material handling, clean-up, and all other VOC generating sources. The programs were designed to provide daily to weekly determinations of solvent recovery efficiency for a period of at least 6 months. In all three cases, the implemented recordkeeping programs were modifications of already-existing plant recordkeeping programs; all measurements and recordkeeping were performed by plant personnel.

In general, the recordkeeping procedures estimate the total amount of solvent used in the plant and the total amount of solvent recovered. The measurement procedures vary among the three plants and are based upon meter readings, coating formulation data, and storage tank level measurements. Measurement procedures used by the three plants are summarized in Table C-13.

A fixed-bed steam-regenerated carbon adsorption system controls the VOC emissions from rubber-coating operations at Plant A. Solvent recovery efficiency for the period is shown in Figure C-4. As shown, the weighted average efficiency for the period is 49.5 percent. The weekly efficiency values have a mean of 49.2 percent and a standard deviation of 19.8 percent. Two significant observations are apparent from the data presented in Figure C-4. First, weekly recovery efficiency values are highly variable, with the individual values range from 3 to 79 percent. Second, an increasing recovery efficiency trend appears to coincide with the installation of new carbon and a new inlet gas cooling coil in the solvent

recovery system. These modifications to the system are expected to improve the control device efficiency.

A fluidized-bed, nitrogen-regenerated, carbon adsorber installed in 1983 controls the VOC emissions from the polymeric coating operations at Plant B. Measured solvent recovery performance is shown in Figure C-5. As shown, the weighted average solvent recovery efficiency for the period is 61.4 percent. Weighted average efficiency refers to the total performance of the system for the entire test period. This value is calculated based upon the amounts of used solvent and recovered solvent summed over the entire period. This value is most indicative of long-term performance.

The mean efficiency for the Plant B data is 63.3 percent with a standard deviation of 20.5 percent. The mean efficiency is calculated as the arithmetic average of the weekly efficiency values. The mean efficiency gives equal weight to each weekly value, regardless of the magnitude of solvent usage and recovery amounts. The standard deviation indicates the degree of variability of the weekly values.

The high degree of variability indicated by the time plot and the standard deviation is due to both measurement and process variability. Measurement variability results primarily from uncertainties in determinations of solvent quantities in storage tanks. Process variability is due to the differences in coating conditions for various batch runs as well as to nonroutine upsets in process operation. The variability would be expected to decrease over longer monitoring periods.

At Plant C, xylene is transported as a concentrated vapor to a condensation system. Figure C-6 illustrates plant-wide solvent recovery efficiency data for the coating line controlled by the condensation unit. As shown, the weekly efficiency data are less variable than the data for Plants A and B. For the period, the weighted average efficiency is 41.0 percent. The mean of the weekly value is 42.5 percent with a standard deviation of 9.2 percent.

The results presented for Plants A and B included modifications to the data collected and reported by plant personnel. Modifications to the reported Plant B data were limited to corrections of arithmetic errors and errors associated with transcription of data. Plant A data

included arithmetic interpretation errors that resulted from failure to account for distilled solvent. In the Plant A operation, solvent is distilled (recovered) from unused coating slurry and returned to the solvent recovery storage tank. In the reported data sheets, however, the solvent recovery system is not credited with this input. The results presented include the credit. Because of these problems, the validity of the data set is unknown.

There is no indication that the plant-wide solvent recovery data relate to the level of control within a subset of the plant such as the coating operation because the plant-wide data include cleanup solvent and wastes. In addition, Plants A and C are not equipped with the level of control prescribed for the coating operation Regulatory Alternatives III and IV. Although Plant B was equipped with the controls specified in Regulatory Alternative III for the coating operation, there were significant errors in the measurement techniques as discussed in Sections C.1.1.2.1 and C.1.1.2.2.

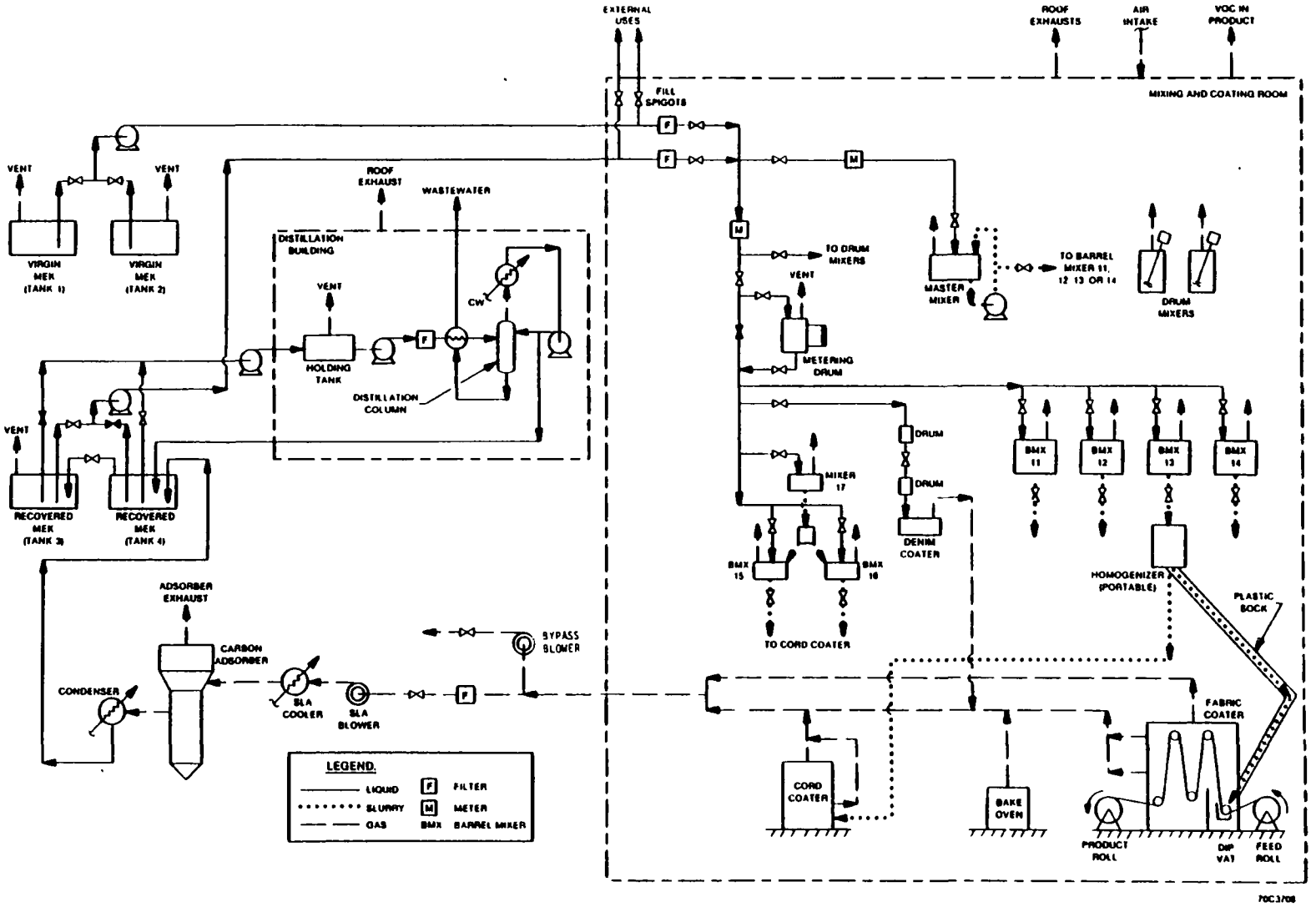

Figure C-1. Solvent/process flow diagram--Plant B.

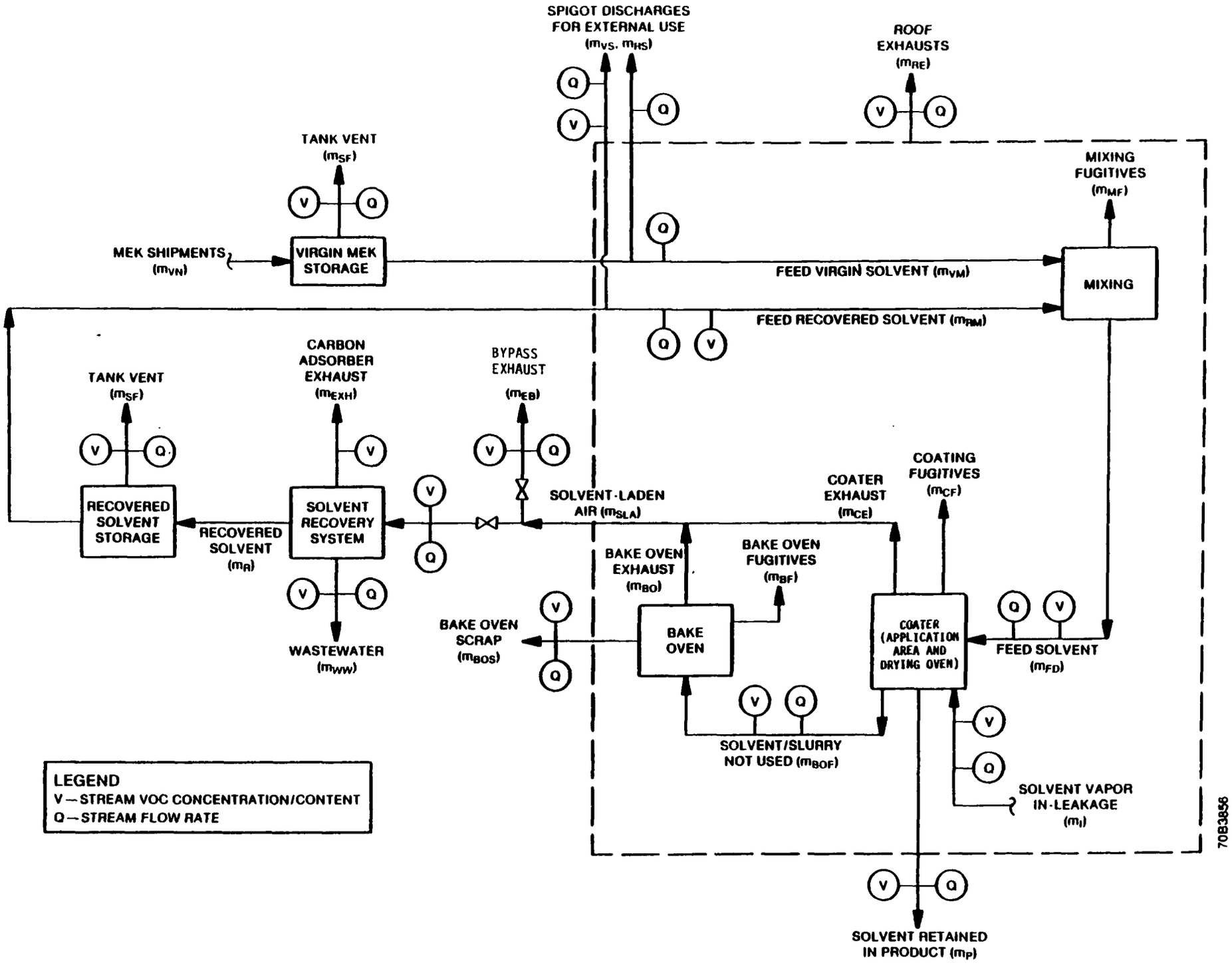

Figure C-2. Solvent block flow diagram--Plant B.

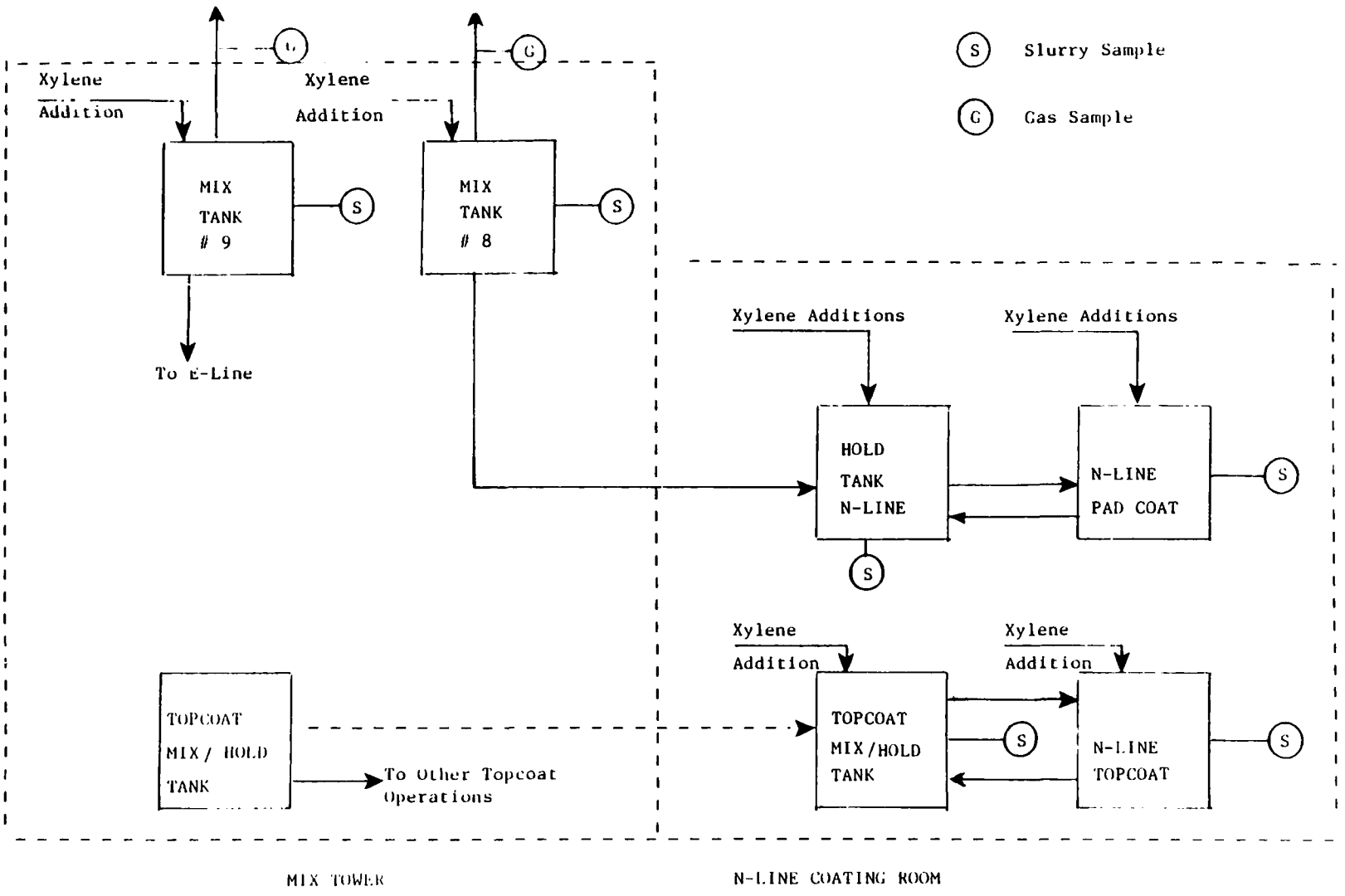

Figure C-3. Process schematic and sample locations--Plant C.

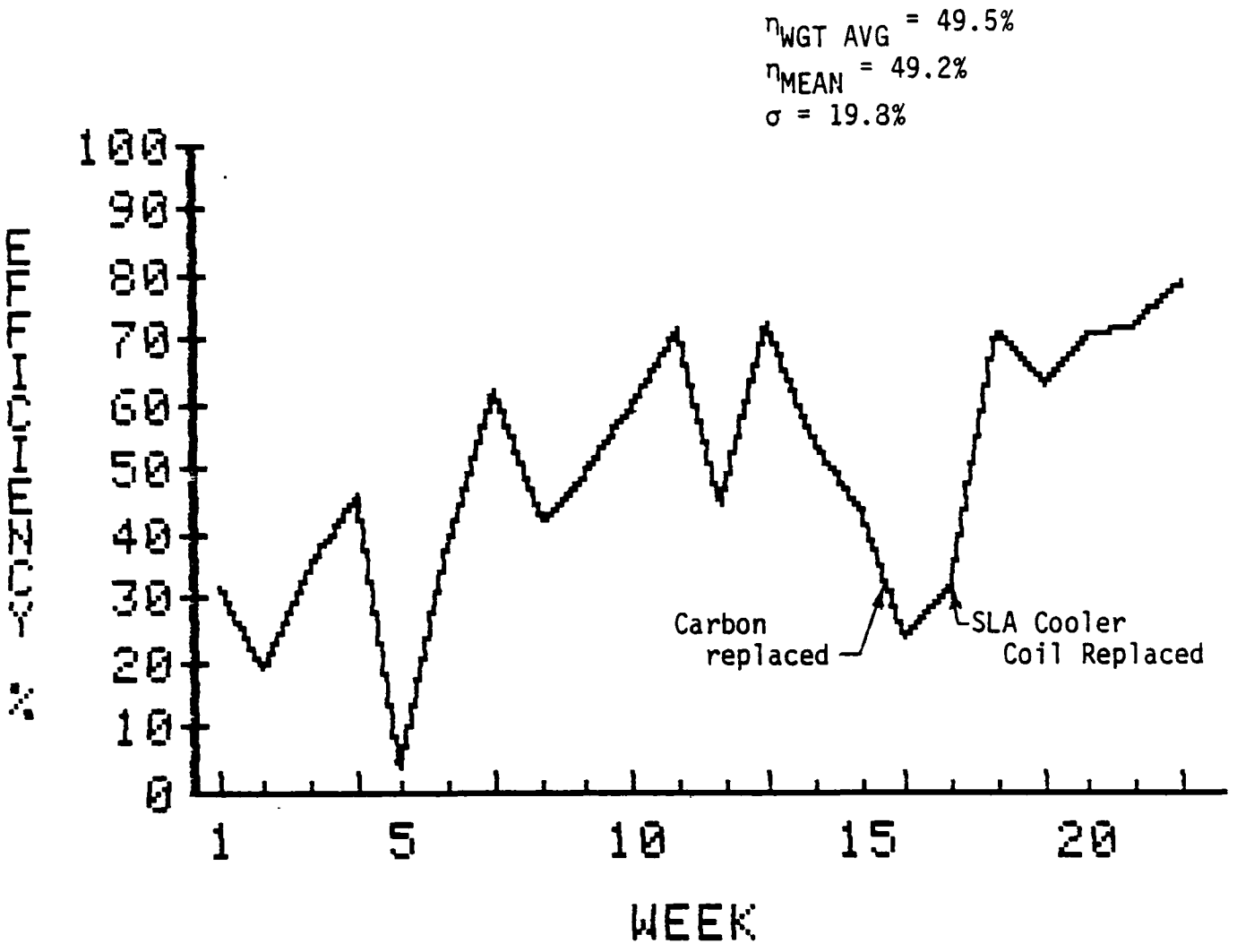

Figure C-4. Solvent recovery efficiency data--Plant A.

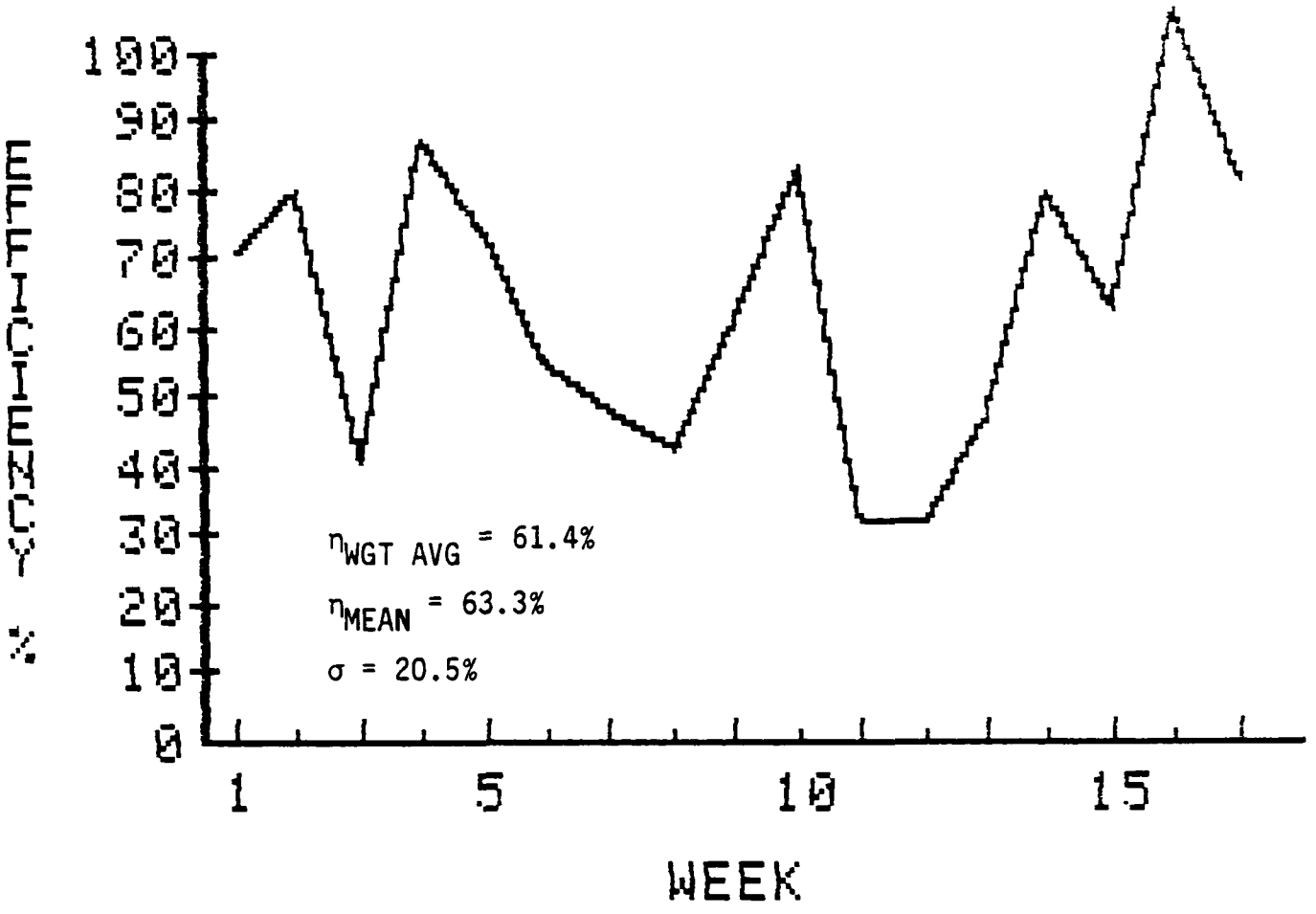

Figure C-5. Solvent recovery efficiency data--Plant B.

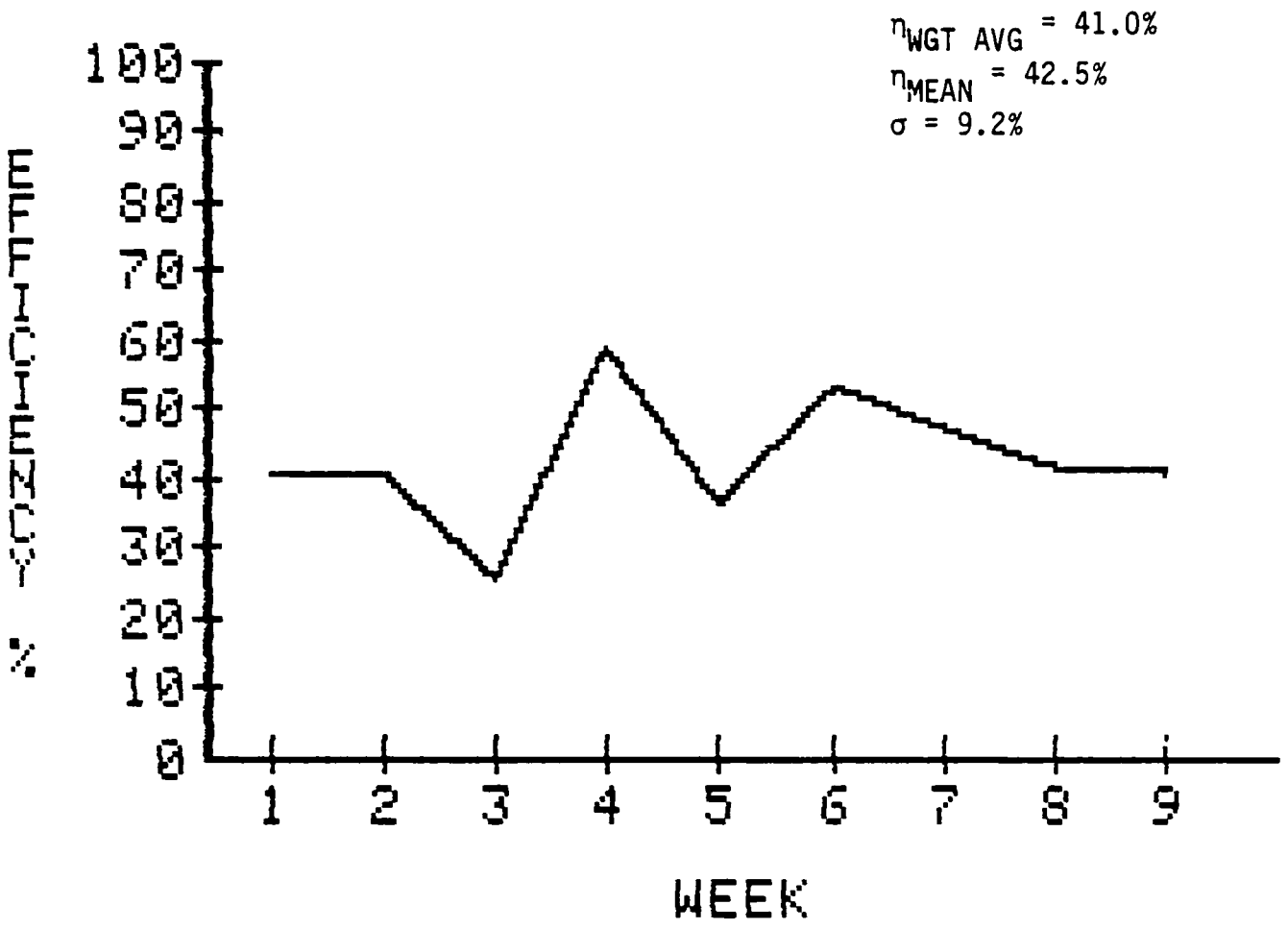

Figure C-6. Solvent recovery efficiency data--Plant C.

TABLE C-1. PROCESS PARAMETERS MONITORED DURING PLANT B SOURCE TESTING

Solvent storage

- Recovered and virgin solvent storage tank inventories were monitored through depth gauging of tank levels. Readings were typically taken before and after each coating job. The virgin solvent tanks were not monitored for increase in inventory because there were no deliveries of make-up shipments.

Solvent transport

- All solvent flows from/to the storage tanks and between mixing vessels were monitored using plant instrumentation.

- Solvent amounts withdrawn from spigots were monitored.

Coating preparation

- Preparation of coatings were observed.

- Solvent flow to the master mixer and each barrel mixer and the preparation of specialty coatings in small drum mixers was continuously monitored.

- An on-hand solvent inventory was taken before start-up, during the lunch break, between coating jobs, and at the end of the day.

- The amount of coating in the barrel mixers and in the small drum mixers that were in use was monitored hourly.

Coating transport

- The amount of coating transferred from a mixer to a dip vat was continuously monitored. (No coating was transferred from a mixer to the denim or cord coater during the test program).

Coating application and drying

- Operation of the fabric coating line was continuously monitored.
- Operating parameters monitored include:

  -- Coating process startups, operating periods, upsets, and shutdown; and

  -- Coating conditions, e.g., fabric type, fabric width (coated and uncoated), and web speed.

(continued)

TABLE C-1. (continued)

Residual coating disposal

- The amount of residual coating remaining in the dip vat, barrel mixer, and plastic feed stock was determined at the end of each coating job.
- The status and operating conditions of the bake oven and the booster blower were continuously monitored.
- The amount of scrap solids discharged from the bake oven was monitored.

Solvent capture

- Openings and closings of the dip vat enclosure and drying tower door were continuously monitored.
- Velocity measurements were taken of the airflow into the dip vat enclosure and drying tower.

Ventilation

- The operating status of the by-pass blower and the mix ceiling fans was monitored.
- All entrances, doorways, and windows to the coating/mixing room were monitored to note if they were open or closed.

Solvent recovery

- Solvent recovery rates were periodically monitored by depth gauging of tank levels.
- Operating parameters monitored include:

  -- SLA flow rate, temperature, and moisture content;
  -- Carbon adsorber inlet and outlet VOC concentrations;
  -- Carbon adsorber operating status (on or off);
  -- Relative carbon recirculation rate;
  -- Regeneration temperature; and
  -- Nitrogen flow rate.

TABLE C-2. PROCESS PARAMETERS FOR FLUIDIZED-BED CARBON ADSORPTION SYSTEM--PLANT B

SLA inlet temperature to water cooler	
°C	57 to 66
(°F)	(135 to 150)
SLA inlet temperature to carbon adsorber	
°C	32 to 35
(°F)	(90 to 95)
SLA relative humidity, %	
Maximum range	30 to 100
Typical range	65 to 75
SLA inlet concentration, ppm	
Design	2,600
SLA outlet concentration, ppm	
Range	5 to 60
Average	15 to 20
Total carbon charge	
kg	4,037
(lb)	(8,900)
No. of trays	8
Carbon flow rate	
kg/h	748 to 1,277
(lb/h)	(1,650 to 2,815)
Pressure drop per tray	
kPa	0.13
(in. w.c.)	(0.5)
Regeneration temperature	
°C	222 to 223
(°F)	(431 to 434)
N_2 flow rate	
m^3/s	0.0017 to 0.0020
(acfm)	(3.7 to 4.3)

TABLE C-3. VALID DATA--CARBON ADSORBER CONTROL EFFICIENCY FOR SINGLE FABRIC COATING LINE--TEST DATA FOR PLANT B[a]

Date	Batch No.	Solvent in inlet, kg	Solvent in inlet, (lb)	Solvent in exhaust, kg	Solvent in exhaust, (lb)	Control efficiency, percent[b]
07/16/84	219	155	(342)	0.5	(1.1)	99.7
	219	48	(105)	0.3	(0.7)	99.5
	222[c]	87	(192)	0.6	(1.3)	99.4
Daily Total		290	(639)	1.4	(3.1)	99.6
07/17/84	221[d]	43	(95)	0.3	(0.7)	99.3
	221	541	(1,193)	10.6	(23.4)	98.0
Daily Total		584	(1,288)	10.9	(24.1)	98.1
07/18/84	223	165	(364)	1.5	(3.3)	99.1
	223	259	(571)	5.3	(11.7)	98.0
	223	287	(633)	0.3	(0.7)	99.8
Daily Total		711	(1,568)	7.1	(15.7)	99.0
07/19/84	225[e]	83	(183)	0.9	(2.0)	99.0
	225	53	(117)	0.3	(0.7)	99.5
	224	261	(575)	0.4	(0.9)	99.8
Daily Total		307	(875)	1.6	(3.6)	99.6
TOTAL		1,982	(4,370)	21.1	(46.5)	98.9

[a]The test report also lists data generated during shutdowns before and after coating jobs and during employee breaks as well as the data generated during batch operations. The efficiencies were calculated based on data that were generated during batch operations only. Batch-only data are presented here.

[b]Control efficiency = $\frac{\text{solvent in inlet - solvent in exhaust}}{\text{solvent in inlet}} \times 100$

[c]Enclosure doors were opened for approximately 84 minutes (70 percent of the time.)

[d]Upset. Drying oven doors opened for 35 minutes.

[e]Upset. Drying oven doors opened for 15 minutes.

TABLE C-4. VALID DATA--MIX TANK EMISSIONS ESTIMATED FROM EPA METHOD 24 DATA FOR PLANT B

Batch No.	Mix tank No.	Initial solvent fraction (f_i)	Final solvent fraction (f_e)	Time (t) between initial and final readings, h	Time mixing, h	Time uncovered, h[a]	Total solvent loss (P_{SV}), percent	Rate of solvent loss, percent/h	Rate of solvent loss,[b] kg/h-m^2	Rate of solvent loss,[b] (lb/h-ft^2)
221	3	0.7824	0.7809	18.3	4.2	14.1	0.858	0.047	0.20	(0.041)
223	4	0.8419	0.8416	17.7	3.7	14.0	0.262	0.015	0.092	(0.019)
224	1	0.7914	0.7820	18.7	18.7	0.0	5.40	0.288	0.94	(0.193)
225	3	0.7922	0.7800	20.6	20.6	0.0	6.97	0.338	0.91	(0.186)

[a] As none of the mix tanks were fitted with a leak-tight cover, the effectiveness of covering may be marginal.

[b] Determined based upon estimated initial volume of the mix tank, estimated surface area of the slurry in the tank, initial density and volatile content, t, and P_{SV}.

TABLE C-5. INVALID TEST DATA--CAPTURE, CONTROL, AND TOTAL VOC REDUCTION EFFICIENCY FOR SINGLE FABRIC COATING LINE AT PLANT B[a]

Date	Batch No.	Solvent applied (m_{AP}), kg	(lb)	Solvent in SLA (m_{SLA}), kg	(lb)	Solvent in bake oven exhaust (m_{BO}), kg	(lb)	Solvent in-leakage (m_{I}), kg	(lb)
07/16/84	219	209	(461)	155	(342)	8	(18)	1.8	(4.0)
	219[f]	64	(141)	48	(105)	3	(7)	0.6	(1.3)
	222[f]	66	(146)	87	(192)	20	(44)	3.0	(6.6)
Daily Total		339	(748)	290	(639)	31	(69)	5.4	(12.0)
07/17/84	221[g]	65	(143)	43	(95)	9	(20)	1.0	(2.2)
	221	496	(1,093)	541	(1,193)	38	(84)	11.5	(25.4)
Daily Total		561	(1,236)	584	(1,288)	47	(104)	12.5	(27.6)
07/18/84	223	178	(392)	165	(364)	11	(24)	3.7	(8.2)
	223	281	(620)	259	(571)	18	(40)	6.5	(14.3)
	223	265	(584)	287	(633)	15	(33)	7.3	(16.1)
Daily Total		724	(1,596)	711	(1,568)	44	(97)	17.4	(38.6)
07/19/84	225[h]	128	(282)	83	(183)	6	(13)	0.4	(0.9)
	225	85	(187)	53	(117)	5	(11)	0.3	(0.7)
	224	295	(650)	261	(575)	14	(31)	1.0	(2.2)
Daily Total		508	(1,119)	397	(875)	25	(55)	1.7	(3.8)
TOTAL		2,132	(4,700)	1,982	(4,370)	147	(325)	(37.0)	(82.0)

(continued)

TABLE C-5. (continued)

Date	Captured solvent (m_{CAPT}),[b] kg	(lb)	Capture efficiency (η_{CAPT}),[c] percent	Solvent in adsorber exhaust (m_{EXH}), kg	(lb)	Control efficiency (η_{CTRL}),[d] percent	Total efficiency (η_T),[e] percent
07/16/84	145	(320)	69	0.5	(1.1)	99.7	69.2
	44	(97)	68	0.3	(0.7)	99.5	67.8
	64	(141)	99	0.6	(1.3)	99.4	98.0
Daily Total	253	(558)	74.9	1.4	(3.1)	99.6	74.6
07/17/84	32	(71)	50	0.3	(0.7)	99.3	49.3
	491	(1,082)	99	10.6	(23.4)	98.0	97.0
Daily Total	523	(1,153)	93	10.9	(24.1)	98.1	91.6
07/18/84	150	(331)	84	1.5	(3.3)	99.1	83.5
	235	(518)	84	5.3	(11.7)	98.0	81.9
	265	(584)	100	0.3	(0.7)	99.8	99.8
Daily Total	650	(1,433)	90	7.1	(15.7)	99.0	88.9
07/19/84	76	(168)	60	0.9	(2.0)	99.0	59
	48	(106)	56	0.3	(0.7)	99.5	56
	246	(542)	83	0.4	(0.9)	99.8	83
Daily Total	370	(816)	73	1.6	(3.6)	99.6	72
TOTAL	1,796	(3,960)	84	21.1	(46.5)	98.9	83.4

(continued)

TABLE C-5. (continued)

[a]The test report also lists data generated during shutdowns before and after coating jobs and during employee breaks as well as the data generated during batch operations. Capture, control, and total efficiencies were calculated based on data that were generated during batch operations only. Batch-only data are presented here.

[b]$m_{CAPT} = m_{SLA} - m_{BO} - m_{I}$.

[c]$\eta_{CAPT} = \frac{m_{CAPT}}{m_{AP}} \times 100$

[d]$\eta_{CTRL} = \frac{m_{SLA} - m_{EXH}}{m_{SLA}} \times 100$

[e]$\eta_{T} = \frac{\eta_{CAPT} \times \eta_{CTRL}}{100}$

[f]Enclosure doors were opened for approximately 84 minutes (70 percent of the time.)
[g]Upset. Drying oven doors opened for 35 minutes.
[h]Upset. Drying oven doors opened for 15 minutes.

TABLE C-6. INVALID PLANT DATA--TOTAL VOC REDUCTION EFFICIENCY FOR SINGLE FABRIC COATING LINE AT PLANT B

Date	Batch No. (a.m., p.m.)	Solvent mixed with batch ($m_{FD'}$),[a] kg	(lb)	Solvent not used ($m_{BOF'}$), kg	(lb)	Solvent applied ($m_{AP'}$),[b] kg	(lb)	Total solvent recovered ($m_{R'}$), kg	(lb)	Solvent recovered from bake oven ($m_{BOV'}$), kg	(lb)	Recovered captured solvent ($m_{RC'}$),[c] kg	(lb)	Total efficiency ($\eta_{T'}$),[d] percent
07/16/84	219 (a.m.)	265	(584)	32	(71)	233	(514)	256	(564)	19	(42)	237	(522)	102
	222 (p.m.)	122	(269)	60	(132)	62	(137)	119	(262)	10	(22)	109	(240)	176
Daily Total		387	(853)	93	(205)	294	(648)	375	(827)	30	(64)	345	(762)	117
07/17/84	221 (a.m.)	55	(121)	0	(0)	55	(121)	101	(223)	13	(29)	88	(194)	159
	221 (p.m.)	612	(1,350)	35	(77)	577	(1,272)	225	(496)	64	(141)	162	(357)	28
Daily Total		667	(1,471)	35	(77)	632	(1,393)	326	(719)	76	(170)	250	(551)	40
07/18/84	223 (a.m.)	475	(1,047)	0	(0)	475	(1,047)	134	(295)	12	(26)	122	(269)	26
	223 (p.m.)	336	(741)	33	(73)	303	(668)	292	(643)	8	(18)	285	(628)	94
Daily Total		811	(1,788)	233	(73)	778	(1,715)	426	(938)	20	(44)	406	(897)	52
07/19/84	225 (a.m.)	235	(518)	31	(68)	204	(450)	116	(256)	15	(33)	101	(223)	50
	224 (p.m.)	363	(800)	36	(79)	327	(721)	244	(538)	15	(33)	229	(505)	70
Daily Total		597	(1,318)	67	(147)	531	(1,171)	360	(794)	30	(66)	330	(728)	62
TOTAL		2,462	(5,430)	228	(502)	2,234	(4,927)	1,487	(3,278)	156	(344)	1,331	(2,938)	60

[a] The superscript ' is used to indicate plant-available data.

[b] $m_{AP'} = m_{FD'} - m_{BOF'}$.

[c] $m_{RC'} = m_{R'} - m_{BOV'}$.

[d] $\eta_{T'} = \frac{m_{RC'}}{m_{AP'}} \times 100\%$

TABLE C-7. INVALID TEST DATA--SUMMARY OF TEST RESULTS AT PLANT C

Date	Time	Batch	Location	Volatile weight fraction	Emission rate from stack analyses[a] m^3/s ft^3/min	Emission rate from stack analyses[a] Kg/h (lb/h)	Emissions from stack analyses m^3 ft^3	Emissions from stack analyses kg (lb)	Total emissions from material balance, kg (lb)[b]
9/12/84	2110	656-1	Mix tank No. 8	0.740428 (0.2957)	0.1396 (4.63)	10.2 (32.8)	0.9 (8.6)	3.9 (159)	72
9/13/84	1007	902	Mix tank No. 8	0.498149 (0.0059)	0.0028 (0.093)	0.21 (0.9)	0.03 (0.2)	0.09 (97)	44
9/13/84	1345	220-3	Mix tank No. 9	0.456089 (0.0031)	0.0015 (0.0420)	0.093 (0.2)	0.006 (0.042)	0.02 (26)	12

[a]Calculated from measured stack gas concentrations and average flowrate. Average flowrate was calculated from stack diameter and average velocity.
[b]These values represent a net gain.

TABLE C-8. VALID DATA--SUMMARY OF COATING LINE OPERATIONS AT PSTL FACILITY

	Line No.				Total
	1	2	3	4	
Line width, m (in.)	1.42 (56)	0.71 (28)	0.71 (28)	0.71 (28)	
No. of runs	25	68	23	24	140
Average line speed, m/s (ft/min)	0.21 (41)	0.24 (46.5)	0.24 (46.5)	0.22 (42.5)	0.23[b] (44.8)[b]
Average weight percent solvent	57.5	62.2	66.0	62.4	60.3[b]
Total solvent used[a]					
kg	12,750	4,915	3,747	2,309	23,723
(lb)	(28,110)	(10,837)	(8,262)	(5,091)	(52,300)
ℓ	15,630	5,761	4,323	3,017	28,731
(gal)	(4,129)	(1,522)	(1,142)	(797)	(7,589)

[a]Measured during 4-week test period.
[b]Average of four runs.

TABLE C-9. VALID DATA--PRESS OPERATIONS DURING TESTS AT MEREDITH/BURDA[a]

Advertising Product-Press:	No. 505
Press width, m (in.)	2 (79)
Web width, m (in.)	1.3 (50)
Shutdown, daily fraction (hour)[b]	0.27 (6.5)
Printing time, %[c]	86
Press speed, m/s (ft/min)	4.6-5.6 (900-1,100)
Magazine Product-Press:	No. 506
Press width, m (in.)	2 (79)
Web width, m (in.)	2 (78 3/8)
Shutdown, daily fraction (hour)[b]	0.58 (13.8)
Printing time, %[c]	64
Press speed, m/s (ft/min)	7.6-9.6 (1,500-1,900)
Both Presses:	
Shutdown, daily fraction (hour)[b]	0.42 (10.1)
Printing time, %[c]	75
Both up, %[c] (ppm[d])	60 (1,670)
One up/one down, %[c] (ppm[d])	33 (770)
Both down, %[c] (ppm[d])	7 (300)
Total solvent usage, ‡P‡/s (gal/h)[e]	0.15 (143)
Type of solvent used	Toluene

[a]Average of three test runs.
[b]Equivalent shutdowns per 24 hour period.
[c]Actual press operating time relative to test time.
[d]Adsorber inlet solvent vapor concentrations.
[e]Includes solvent in inks, varnishes, and extenders.

TABLE C-10. VALID DATA--SUMMARY OF DEMONSTRATED VOC EMISSION CONTROL EFFICIENCIES AT MEREDITH/BURDA, PERCENT

Data sources	Meredith/Burda (Phase III)	
	Overall[a]	Adsorber
Short-term (8.5-9 hours)	90-97	97-99
51.5-hour material balance	89	--
78-hour material balance	88	99
Long-term monthly plant data (10 months)	84-91	--

[a]Efficiencies are 5 percent lower than measured apparent efficiencies: 2 percent for a temperature correction factor and 3 percent for infiltration of solvent vapors.

TABLE C-11. VALID DATA--SUMMARY OF CAPTURE EFFICIENCY DATA--
GENERAL TIRE AND RUBBER COMPANY

Date	Production order No.	Run time		Run length, minutes	VOC emissions, kg (lb)			Capture efficiency, %[a]
		Start	End		Embosser air intake	Wall fan	CA inlet	
3/18/81	T-14582	1401	1607	126	4.8 (10.6)	0[b]	66.4 (146.4)	93
3/19/81	T-15523	1420	1610	110	3.2 (7.1)	6.9 (15.2)	21.6 (47.6)	NM[c]
3/20/81	T-15521	1256	1402	74	2.9 (6.4)	0[b]	27.0 (59.5)	90
3/23/81	T-15516	0909	1025	76	2.3 (5.1)	0[b]	22.3 (49.2)	91
	T-15519	1351	1413	32	0.6 (1.3)	0[b]	6.0 (13.2)	91
3/25/81	T-15511	0942	1047	65	2.5 (5.5)	0[b]	35.5 (78.3)	94
3/26/81	T-15508	1126	1222	56	1.7 (3.7)	0[b]	21.6 (47.6)	93
	T-15507	1439	1540	61	1.6 (3.5)	0[b]	21.5 (47.9)	93

[a]Capture efficiency, % = $\frac{\text{CA intake emissions, kg}}{\text{Embosser air intake emission, g + CA inlet emissions, kg}}$ (100%)

[b]Wall fan not operating properly.

[c]Not meaningful because of poor air management during this test run.

TABLE C-12. VALID DATA--SUMMARY OF CARBON ADSORPTION EFFICIENCY DATA--
GENERAL TIRE AND RUBBER COMPANY

Date	Production order No.	Run time		Run length, minutes	VOC emissions, kg (lb)		Carbon adsorption efficiency
		Start	End		CA inlet	CA outlet	
3/25/81	T-15511	0942	1047	65	35.5 (78.3)	0.13 (0.29)	99.6
3/26/81	T-15508	1126	1222	56	21.5 (47.4)	0.32 (0.71)	98.5
	T-15507	1439	1540	61	21.5 (47.4)	0.22 (0.49)	99.0

TABLE C-13. SUMMARY OF SOLVENT RECOVERY MEASUREMENT PROCEDURES[a]

Plant	Solvent recovered	Solvent used
A	Differences in recovered solvent inventory	Differences in virgin (feed) solvent inventory
B	Differences in recovered solvent inventory	Gravimetric and volumetric readings of metered solvent charged to the coating process
C	Differences in recovered solvent inventory	Volumetric readings of metered solvent charged to the coating process

[a]In general, solvent recovery efficiency, percent = $\frac{\text{solvent recovered}}{\text{solvent used}} \times 100$

APPENDIX D - EMISSION MEASUREMENT AND MONITORING

This appendix describes the measurement method experience that was gained during the emission testing portion of this study, recommended performance test procedures, and potential continuous monitoring procedures. The purposes of these descriptions are to define the methodologies used to collect the data, to recommend potential procedures to demonstrate compliance with a new source performance standard, and to discuss alternatives for monitoring either emissions or process parameters to indicate continued compliance with that standard.

D.1 EMISSION MEASUREMENT TEST PROGRAM AND METHODS

Emission source testing in the polymeric coating industry was conducted by the Emission Standards and Engineering Division (ESED) of the Environmental Protection Agency (EPA) as part of the background support study for the new source performance standard for this industry. These tests included a complete balance test at one facility, a mix area test at another facility, and long-term overall solvent recovery testing at three facilities. The long-term data gathering was performed at facilities that use carbon adsorption and condensation units for volatile organic compound (VOC) control.

D.1.1 Coating Analysis Testing

Coating samples were received from three polymeric coating manufacturers and analyzed using EPA Reference Method 24. All samples were solvent-based coatings; no low-solvent or waterborne coatings were available. Preliminary analysis indicates that Method 24 is applicable to these coatings, although specialized techniques and equipment may be needed.

The results of the Method 24 testing met the previous requirements of the American Society of Testing and Materials (ASTM) standards on which Method 24 is based. The analysis results generally compared well with the manufacturers' formulation data. Therefore, Method 24 should be applicable to the polymeric coating industry.

D.1.2 Emission Source Testing Programs

One polymeric coating plant was tested for VOC emissions. In general, the purpose of the testing program was to characterize the VOC emissions to the atmosphere and the control efficiency of the vapor capture and processing systems, as well as the overall solvent usage, end distribution, and material balance throughout the entire coating process. This field testing was much more comprehensive than the performance test procedures specified in the applicable regulations for the industry in order to evaluate various testing approaches and methods and to gather useful auxiliary information to better understand the process operation.

D.1.3 Stack Emission Testing Conducted

D.1.3.1 Testing Locations. Gas streams that were tested for VOC concentrations and flow rate included: inlets and outlets of vapor processing devices; uncontrolled exhaust streams venting directly to the atmosphere; intermediate process streams such as hood exhausts and bake oven exhausts venting to other process units. From the concentration and flow rate results, the VOC mass emissions or mass flow rate in each stream could be calculated. The gas streams to the carbon adsorption recovery unit and from the emergency blower exhaust were in vents that were suitable for conventional EPA stack emission measurement techniques, and these measurement approaches are described in this section.

If there were emissions that were not collected and vented through stacks suitable for conventional testing, then ambient VOC survey techniques had to be adopted. (An example would be open doorways, roof exhausts, and bake oven exhausts.) Where possible, flow rates were estimated from vendor data. These nonconventional measurement techniques are described in a later Section, D.1.6.

D.1.3.2 Flow Measurements. During ESED/EPA's field testing programs, Reference Methods 1 and 2 were used to determine the volumetric flow rate of the gas streams being sampled. Moisture contents were

measured by inline psychrometers rather than EPA Method 4. Because all of the stacks or ducts that were tested had diameters of at least 12 inches, Methods 1 and 2 were applicable, and alternative flow rate measurement techniques were not required. The volumetric flow rates were determined on a wet basis, corresponding to the VOC concentration method used for that site measured VOC concentrations under actual conditions (wet basis).

Reference Method 1 was used to select the sampling site along the duct or stack, and to determine the number of sampling points on the cross-sectional area inside the duct. Method 2 was used to measure gas velocity. This method is based on the use of an S-type pitot tube to traverse the duct cross-section to calculate an average gas velocity. To determine the gas stream molecular weight and density, as required for Method 2, the fixed gases composition and moisture content are needed. The fixed gas composition (O_2, CO_2, CO, N_2) was determined assuming the dry molecular weight of the vent gases was assumed to be the same as ambient air in lieu of Method 3. This was a valid assumption in that the measured streams were essentially ambient air, i.e., there were no combustion sources involved and the hydrocarbon concentrations in the stream were relatively low. Gas stream moisture content was measured with a wet bulb/dry bulb technique. The wet bulb/dry bulb technique may be less precise than Method 4; however, it was acceptable because the effect of the moisture value on the final results was relatively insignificant (no corrections to dry conditions were needed). The moisture content is used to adjust the molecular weight in a calculation step in Method 2, and to adjust the flow rates to a dry basis if needed. Using the duct area, the gas volumetric flow rate was then calculated.

D.1.3.3 Concentration Measurements. The VOC concentration in each stack was determined using a semi-continuous (1-minute interval) flame ionization detector. For the polymeric coating industry, the EPA recognizes that this technique will give results equivalent to those of the continuous analyzer method specified in EPA Method 25A. It should be noted that, at the time of the testing, Methods 25 and 25A had not been finalized, so preliminary versions were followed. However, the later

changes to these methods are not expected to be significant and would not have affected the test results.

The direct extraction flame ionization analyzer (FIA) method was used at all measurement sites which were analyzed for gaseous VOC emissions. The direct FIA had the advantage that, with semi-continuous measurements, minor process variations could be noted. Also, once it was set up, it was relatively inexpensive to operate for a long period, and thus, changes in emissions due to process variations could be easily noted.

The other methods can be used at any sampling location, including sites in explosive atmospheres or remote locations. When the time-integrated sampling methods are used (such as EPA Method 25, bag sampling or syringe sampling), the sample is collected for a 45- to 60-minute time period. Because of its complex analysis procedure, the Method 25 samples are analyzed later in the laboratory. The integrated bag samples, however, are analyzed as soon as possible (within 24 hours) on-site by either a FIA or gas chromatographic (GC) method.

The FIA's were usually calibrated with propane, although sometimes they were also calibrated with the solvent being used in the coating process. At the polymeric coating facility, the FIA was calibrated with the solvent being used in the process. This was convenient because the process used a single solvent.

The results from the different FIA sampling approaches should be equivalent, provided they are compared for the same time periods. In previous tests of other coating industries, the Method 25 results differed somewhat from the results of the FIA. The differences were probably due to the fact that Method 25 procedure measures all carbon atoms equally, while the FIA detector has a varying response ratio for different organic compounds. The difference in results would be most pronounced when a multi-compound solvent mixture is used.

In situations where more than one solvent is used, a GC technique may be best. The results from the GC sampling approaches would necessarily be different from the continuous FIA because of the different sampling time periods. The results from a GC analysis are reported as concentrations for each individual compound, and thus cannot be compared directly to the FIA results. The FIA is calibrated with one compound and the total hydrocarbon

concentration is reported as one number on the basis of that compound. Also, the FIA detector has a varying response ratio to different organic compounds, so again the difference in results between the GC and FIA would be most pronounced when a multi-component solvent mixture is used.

D.1.3.4 Tank Measurements. The measurement of solvents and coatings in tanks and/or flow rates through meters was critical to the material balance test at one plant in the polymeric industry. Also, the long-term, liquid-solvent material balance testing (discussed in Section D.1.5) requires measurement using tanks and meters. There is no ASTM or EPA reference method for tank or meter measurements. In all cases in the material balance and long-term tests, tank volumes were verified by manufacturer's data, and meter readings were verified by calibration data (where available) supplied by the plant. At the one material balance test, additional calibration was performed by the testing contractor.

D.1.4 Mix Room Emission Estimates

The mix room emissions from one plant were measured using data gathered by EPA Method 24. This procedure called for grabbing a sample at the start of the mix operation and later grabbing a sample at the finish of the mix operation. The solvent content of both samples was measured and compared. Assuming the solids content remained the same, the VOC loss can be directly calculated from this data.

D.1.5 Liquid-Solvent Material Balance Testing Conducted

The EPA conducted long-term, liquid-solvent material balance tests at three plants in the polymeric coating industries. The EPA worked with the facilities and reviewed their procedures for data gathering. The recovery devices include a fixed-bed, steam-regenerated carbon adsorber, a fluidized-bed, hot nitrogen-regenerated carbon adsorber, and a condensation unit. The solvent used by the plant was compared to the solvent recovered (usually on a weekly or monthly basis), in order to obtain an overall control efficiency, combining capture and recovery efficiencies. In general, the solvent used by the plant was based on solvent purchases and any in-house sources and the solvent recovered was determined by reading the level in the solvent recovery tank at the recovery device.

D.1.6 Ambient Surveys and Fugitive Emission Characterization

Ambient measurements were conducted during some test series. Open doorways were monitored periodically to estimate the mass flux of VOC into

and out of the coating area. The flow rate through openings was measured with a hand-held velometer or a hot-wire anemometer (6 to 9 points were sampled per doorway). Hydrocarbon concentration was measured with a portable total hydrocarbon analyzer with a photoionization-type detector (PID).

Ambient VOC concentration levels in the coating area were measured periodically during the testing period. The surveys were conducted throughout the room at various heights and distances from the center.

Surveys were also made of the VOC concentrations and flow rates into hood intakes above the coater, in order to estimate and characterize the fugitive VOC's which were drawn into the hooding exhaust stack. VOC concentration and flow measurements were made at representative spots around intake hoods as close to the intake as the physical equipment setup permitted.

D.1.7 Solvent Sample Analysis

Some plants mix their coatings on-site from raw materials. Samples of the solvent (or mixture of solvents) can be obtained and analyzed for speciation by direct injection into a gas chromatograph. The results from these analyses indicate whether the solvent (or solvent mixture) being used matches the plant's formulation data.

Samples of recovered solvent from carbon adsorbers were also obtained and analyzed in order to compare the composition of the recovered solvent to that of the new solvent. This comparison identified species which are more likely to be recovered by a particular recovery system.

D.1.8 Wastewater Sample Analysis

If the solvents being used were miscible in water, then the recovered solvent/condensate from a steam-regenerated carbon adsorber is separated in a distillation step. Wastewater would then result from the distillation column. For immiscible solvents, the condensate can be decanted and result directly in a wastewater. The wastewater samples were analyzed for compound speciation and total organic carbon using standard laboratory water analysis procedures.

The results from this determination were used to characterize the operation of the carbon adsorber or condensation unit and applied to the solvent material balance calculations.

D.1.9 Product Sample Analysis

Product samples were collected and analyzed for residual solvent content for the material balance test. The results from this determination were applied to the solvent material balance calculations. The test procedure was an adaptation of a NIOSH ambient carbon tube measurement technique. The product samples were put in a container with a known aliquot of carbon disulfide (CS_2). The extract was analyzed for compound speciation by a gas chromatograph, in the same manner as ambient sample carbon tubes. This product sampling and analysis was a preliminary test procedure, as there is no EPA reference method for product sampling. The results were a range expected for polymeric coatings, but there is no way to independently verify the results.

D.2 PERFORMANCE TEST METHODS

Many different approaches, test methods, and test procedures can be used to characterize VOC emissions from industrial surface coating facilities. The particular combination of measurement methods and procedures to be used depends upon the format of the standard and test procedures specified in the applicable regulation. General testing approaches are:

1. Analysis of coatings,
2. Direct measurement of emissions to the atmosphere from stacks,
3. Determination of vapor processing device efficiency,
4. Determination of vapor capture system efficiency,
5. Determination of overall control efficiency based on liquid solvent material balance, and
6. Survey of fugitive emissions.

D.2.1 Performance Testing of Coatings

D.2.1.1 Analysis of Coatings. Recommended Method. EPA Reference Method 24 is the recommended method for the analysis of coatings. This method combines several ASTM standard methods to determine the volatile matter content, water content, density, volume solids, and weight solids of inks and related surface coatings. These parameter values are combined to calculate the VOC content of a coating in the units specified in the applicable regulation.

Reference Method 24A is similar in principle to Method 24, but some of the analytical steps are slightly different and the results would differ.

It was developed specifically for publication rotogravure printing inks and contains specific analytical steps which were already widely used in that industry. Thus, Reference Method 24A is not recommended for analysis of coatings for polymeric coatings.

Volatile Matter Content (W_V). The total volatile content of a coating is determined by using ASTM D 2369-81, "Standard Test Method for Volatile Content of Coatings." This procedure is applied to both aqueous and nonaqueous coatings. The result from this procedure is the volatile content of a coating as a weight fraction.

Water Content (W_W). There are two acceptable procedures for determining the water content of a coating: (1) ASTM D 3792-80, "Standard Test Method for Water Content of Water-Reducible Paints by Direct Injection into a Gas Chromatograph," and (2) ASTM D 4017-81, "Standard Test Method for Water in Paints and Paint Materials by the Karl Fischer Titration Method." This procedure is applied only to aqueous coatings. The result is the water content as a weight fraction.

Organic Content (W_O). The volatile organic content of a coating (as a weight fraction) is not determined directly. Instead, it is determined indirectly by substraction from the total volatile content and the water content values.

$$W_O = W_V - W_W$$

Solids Content (W_S). The solids content of a coating (as a weight fraction) is also determined indirectly using the previously determined values:

$$W_S = 1 - W_V = 1 - W_O - W_W$$

Volume Solids (V_S). There is no reliable, accurate analytical procedure that is generally applicable to determine the volume solids of a coating. Instead, the solids content (as a volume fraction) is calculated using the manufacturer's formulation data.

Coating Density (D_C). The density of coating is determined using the procedure in ASTM D 1475-60 (Reapproved 1980), "Standard Test Method for Density of Paint, Varnish, Lacquer, and Related Products."

Cost. The estimated cost of analysis per coating sample is:

$50 for the total volatile matter content procedure; $100 for the water content determination; and $25 for the density determination. Because the testing equipment is standard laboratory apparatus, no additional purchasing costs are expected.

Adjustments. If nonphotochemically reactive solvents are used in the coatings, then standard gas chromatographic techniques may be used to identify and quantify these solvents. The results of Reference Method 24 may be adjusted to subtract these solvents from the measured VOC content.

D.2.1.2 Sampling and Handling of Coatings. For Method 24 analysis of a coating, a sample should be obtained and placed in a 1-liter container. The head-space in the container should be as small as possible so that organics in the coating do not evaporate and escape detection. The coating sample should be taken at a place that is representative of the coating being applied. Alternatively, the coating may be sampled in the mixing or storage area while separate records are kept of dilution solvent being added at the coating heads. Some polymeric coatings have a component that causes the coating to "set" within a short time period. Samples of these coatings need to be taken before the "setting agent" has been added.

The coating sample should be protected from direct sunlight, extreme heat or cold, and agitation. There is no limitation given in Method 24 for the length of time between sampling and analysis.

D.2.1.3 Weighted Average VOC Content of Coatings. If a plant uses all low-solvent coatings (as specified in the applicable regulation), then each coating simply needs to be analyzed following Method 24. However, if a plant uses a combination of low- and high-solvent coatings, the weighted average VOC content of all the coatings used over a specified time period needs to be determined. Depending on the format of the standard, the average is weighted by the volume or mass of coating solids.

In addition to the Method 24 or manufacturer's formulation information, the amount (as a weight) of each coating used must be determined. The EPA has no independent test procedure to determine the amount of coating used, and instead it is recommended that plant inventory and usage records be relied upon. Most plants already keep detailed records of amounts of coatings used. Thus, no additional effort or cost is expected to be required to attain coating usage. If a plant keeps its inventory records on a volume basis, then the density of the coating needs to be determined to convert the inventory to a mass basis.

D.2.2 Stack Emission Testing

D.2.2.1 Testing Locations. Stack emission testing techniques would be needed to measure the VOC concentration and gas flow rate in stacks and ducts such as: inlets and outlets of vapor processing devices; exhaust streams from mixing equipment and/or storage tanks; uncontrolled exhaust streams venting directly to the atmosphere; intermediate process streams such as hood exhausts and drying oven exhausts venting to other process units. The particular streams to be measured depends upon the applicable regulation.

D.2.2.2 Use of Test Results. The results from the VOC concentration measurement and flow rate measurement can be combined and used in many ways. If a regulation is on a concentration basis, then only VOC concentration measurement is needed and the result can be used directly. If the regulation is on a mass emission basis (i.e., mass emitted per unit of production; or mass emitted per unit of time), then the concentration and flow rate results are combined to calculate the mass flow rate. If the regulation is on an efficiency basis, then mass flow rate is determined for each of the streams being compared and the efficiency is calculated straightforwardly.

The performance test procedure in the applicable regulation will define the test length and the conditions under which testing is acceptable, as well as the way the reference test method measurements are combined to attain the final result.

D.2.2.3 Overall Control Efficiency. Performance test methods and procedures are used to determine the overall control efficiency of the add-on pollution control system. The add-on control system is composed of two parts: a vapor capture system, and a vapor processing device (carbon adsorber, condenser, or incinerator). The control efficiency of each component is determined separately and the overall control efficiency is the product of the capture system and processing device efficiencies. (Note: This measured overall control efficiency will not reflect control or emission reduction due to process and operational changes.)

D.2.2.4 Processing Device Efficiency. The three types of processing devices that are expected to be used in the polymeric parts coating industry are carbon adsorbers, condensers, and incinerators. The test procedure to determine efficiency is the same for each control technology.

To determine the efficiency of the emission processing device, the VOC mass flow rate in the inlet and outlet gas streams must be determined. To determine the mass of VOC in a gas stream, both the concentration and flow rate must be measured. The recommended methods and the reason for their selection are discussed later in Sections D.2.2.7 and D.2.2.8.

D.2.2.5 Capture System Efficiency. The efficiency of the vapor capture system can be defined in one of two ways: (1) as the ratio of the mass of gaseous VOC emissions directed to the vapor processing device to the total mass of gaseous VOC, or (2) as the ratio of the mass of gaseous VOC emissions directed to the vapor processing device to the total mass of solvent applied in the coating process. The definitions are essentially equivalent; selection of the measurement approach using one of the two definitions is based upon considerations discussed below.

In order to determine capture efficiency by the first definition (gas phase), all fugitive VOC emissions from the coating area must be captured and vented through stacks suitable for testing. Furthermore, the coating line being tested should be isolated from any fugitive VOC emissions originating from other sources. All doors and other openings through which fugitive VOC emissions might escape would be closed.

One way to isolate the coating line from other VOC sources is to construct a temporary enclosure around the coating line to be tested. This approach is not recommended because a temporary enclosure would necessarily alter the ventilation around the coating line, making the performance test not representative of normal operating conditions. Instead, if an enclosure is needed, a permanent enclosure is recommended. The cost of a one-time permanent enclosure would be comparable to that of constructing and taking down a temporary enclosure each time a performance test is conducted. However, if a temporary enclosure is used, the enclosure must be designed to operate with ventilation proportional to the overall building ventilation. In addition, the flow and VOC concentration of the ventilation air would need to be measured using methods described in Sections D.2.2.7 and D.2.2.8 or alternative methods with similar precision and accuracy. Hence, the temporary enclosure must also be designed for making these measurements.

Instead of requiring a performance test, a regulation may require a specific equipment configuration in order to ensure a high capture efficiency. For example, the applicable regulation may specify a total

enclosure around the coater or sealed lids and a closed venting system for coating mix equipment. To ensure that these equipment specifications are met, visible inspections or Method 21 leak detection surveys can be conducted. However, ESED/EPA has no experience using Method 21 for detecting such leaks in the surface coating industries, and thus cannot recommend a leak concentration level to be used in evaluating the performance of various pieces of capture equipment.

In order to determine capture efficiency by the second (gas/liquid-phase) definition, a generally simple approach is required. The gas-phase VOC content of the capture streams must be measured, as discussed in Sections D.2.2.7 and D.2.2.8. This is generally a straightforward procedure, since the VOC stream is typically of relatively constant flow rate and confined within a duct of known configuration. Simultaneously, the liquid-phase solvent application rate must be determined. This measurement typically involves measurement of the coating application rate and the VOC content and density of the coating. The coating application rate can be measured using plant instrumentation or by use of volumetric or gravimetric techinques. The coating characteristics are determined by EPA Reference Method 24, as described in Section D.2.1.

D.2.2.6 Stack Emission Testing--Time and Cost. The length of a performance test is specified in the applicable regulation and is selected to be representative for the industry and process being tested. The length of a performance test should be selected to be long enough so as to account for variability in emissions due to up and down operation times, routine process problems, and different products. Also, the performance test time period should correspond to the cycles of the emission control device.

Coating line operations are intermittent; there are often long time periods between runs for cleanup, setup, and color matching, so the total length of a performance test could vary from plant to plant. In general, a performance test would consist of three to six runs, each lasting from 1/2 to 3 hours. It is estimated that for most operations, the field testing could probably be completed in 2 to 3 days (i.e., two or three 8-hour work shifts) with an extra day for setup, instrument preparation, and cleanup.

The cost of the testing varies with the length of the test and the number of vents to be tested: inlet, outlet, intermediate process, and

fugitive vents. The cost to measure VOC concentration and flow rate is estimated at $6,000 to $10,000 per vent, excluding travel expenses.

D.2.2.7 Details on Gas Volumetric Flow Measurement Method. Recommended methods. Reference Methods 1, 1A, 2, 2A, 2C, 2D, 3 and 4 are recommended as appropriate for determination of the volumetric flow rate of gas streams.

Large stacks with steady flow. Methods 1 and 2 are used in stacks with steady flow and with diameters greater than 12 inches. Reference Method 1 is used to select the sampling site, and Reference Method 2 measures the volumetric flow rate using a S-type pitot tube velocity traverse technique. Methods 3 and 4 provide fixed gases analysis and moisture content, which are used to determine the gas stream molecular weight and density in Method 2. The results are in units of standard cubic meters per hour.

Small ducts. If the duct is small (less than 12 inches diameter) then alternative flow measurement techniques will be needed using Method 2A, Method 2D, or Methods 2C and 1A. Method 2A uses an in-line turbine meter to continuously and directly measure the volumetric flow. Method 2D uses rotameters, orifice plates, anemometers, or other volume rate or pressure drop measuring devices to continuously measure the flow rate. Methods 1A and 2C (in combination) modify Methods 1 and 2 and use a small standard pitot tube traverse technique to measure the flow in small ducts, and apply when the flow is constant and continuous.

Unsteady flow. If the flow in a large duct (greater than 12 inches diameter) is not steady or continuous, then Method 2 may be modified to continuously monitor the changing flow rate in the stack. A continuous 1-point pitot tube measurement is made at a representative location in the stack. For small ducts with unsteady flow, continuous measurement with Method 2A or 2D is recommended.

Adjustment for moisture. The results do not need to be adjusted to dry conditions (using Method 4 for moisture) if the VOC concentrations are measured in the gas stream under actual conditions; that is, if the VOC concentrations are reported as parts of VOC per million parts of actual (wet) volume (ppmv). If the concentrations are measured on a dry basis (gas chromatographic techniques or Method 25) then the volumetric flow rate must correspondingly be adjusted to a dry basis.

D.2.2.8 Details on VOC Concentration Measurement Method (Method 25A). The recommended VOC measurement method is Reference Method 25A, "Determination of Total Gaseous Organic Concentration Using A Flame Ionization Analyzer". This method was selected because it measures the expected solvent emissions accurately, is practical for long-term, intermittent testing, and provides a continuous record of VOC concentration. A continuous record is valuable because of coating line and control device fluctuations. Measurements that are not continuous may not give a representative indication of emissions. The coating lines in this industry may operate intermittently, and the vent concentrations may vary significantly. Continuous measurements and records are easier to use for intermittent processes, and the short-term variations in concentration can be noted. The continuous records are averaged or integrated as necessary to obtain an average result for the measurement period.

Method 25A applies to the measurement of total gaseous organic concentration of vapors consisting of alkanes, and/or arenes (aromatic hydrocarbons), and other organic solvent compounds. The instrument is calibrated in terms of propane or another appropriate organic compound. A sample is extracted from the source through a heated sample line and glass fiber filter and routed to a FIA. (Provisions are included for eliminating the heated sampling line and glass fiber filter under some sampling conditions.) Results are reported as concentration equivalents of the calibration gas organic constitutent or organic carbon.

Instrument calibration is based on a single reference compound. For the polymeric coating industry, the recommended calibration compound is propane or butane. (However, if only one compound is used as the sole solvent at a plant, then that solvent could be used as the calibration compound.) As a result, the sample concentration measurements are on the basis of that reference compound and are not necessarily true hydrocarbon concentrations. The response of an FIA is proportional to carbon content for similiar compounds. Thus, on a carbon number basis, measured concentrations based on the reference compound are close to the true hydrocarbon concentrations. Also, any minor biases in the FIA concentration results are less significant if the results will be used in an efficiency calculation (both inlet and outlet measurements are made and compared) and

biases in each measurement will tend to cancel out. For calculation of emissions on a mass basis, results would be nearly equivalent using either the concentration and molecular weight based on a reference gas or the true concentration and true average molecular weight of the hydrocarbons.

The advantage of using a single component calibration is that costly and time consuming chromatographic techniques are not required to isolate and quantify the individual compounds present. Also, propane and butane calibration gases are readily available in the concentration ranges needed for this industry.

The analysis technique using an FIA measures total hydrocarbons including methane and ethane, which are considered non-photochemically reactive, and thus not VOC's. Due to the coating solvent composition, little methane or ethane is expected in the gas streams so chromatographic analysis is not needed nor recommended to adjust the hydrocarbon results to a nonmethane, nonethane basis.

Other Methods. Three other VOC concentration measurement methods were considered (and rejected) for this application: Method 18, Method 25B, and Method 25.

Method 18. Gas chromatograph analysis on integrated bag samples following Method 18 was considered because results would be on the basis of true hydrocarbon concentrations for each compound in the solvent mixture. However, the BAG/GC sample technique is not a continuous measurement and would be cumbersome and impractical because of the length of the testing. Also, it would be costly and time consuming to calibrate for each compound, and there is little advantage or extra accuracy gained from the GC approach.

Method 25B. Method 25B, "Determination of Total Gaseous Organic Concentration Using a Nondispersive Infrared Analyzer," is identical to Method 25A except that a different instrument is used. Method 25B applies to the measurement of total gaseous organic concentration of vapor consisting primarily of alkanes. The sample is extracted as described in Method 25A and is analyzed with a nondispersive infrared analyzer (NDIR). Method 25B was not selected because NDIR analyzers do not respond as well as FIA's to all of the solvents used in this industry. Also, NDIR's are

not sensitive in low concentration ranges (<50 ppmv), and the outlet concentrations from incinerators and carbon adsorbers are expected to often be below 50 ppmv.

Method 25. Method 25, "Determination of Total Gaseous Nonmethane Organics Content" was also considered. A 30- to 60-minute integrated sample is collected in a sample train, and the train is returned to the laboratory for analysis. The collected organics are converted in several analytical steps to methane and the number of carbon atoms (less methane in the original sample) is measured. Results are reported as organic carbon equivalent concentration. The Method 25 procedure is not recommended for this industry because it is awkward to use for long test periods and it takes integrated samples instead of continuously sampling and recording the concentration. Concentration variations would be masked with Method 25 time-integrated sample. Also, Method 25 is not sensitive in low concentration ranges (<50 ppmv). However, Method 25 has the advantage that it counts each carbon atom in each compound and does not have a varying response ratio for different compounds.

D.2.3 Liquid Solvent Material Balance

If a plant's vapor processing device recovers solvent (such as carbon adsorption or condenser systems) then a liquid solvent material balance approach can be used to determine the efficiency of the vapor control system. This is done by comparing the solvent used versus the solvent recovered. These values may be obtained from a plant's inventory records. The EPA has no test procedure to independently verify the plant's accounting records. However, it is recommended that the plant set up and submit to the enforcement agency its proposed inventory accounting and record keeping system prior to any performance testing.

For this performance testing approach, the averaging time (performance test time period) usually needs to be 1 week to 1 month. This longer averaging period allows for a representative variety of coatings and products, as well as reducing the impact of short-term variations due to process upsets, solvent spills, and variable amounts of solvent in use in the process.

The volume of solvent recovered may be determined by measuring the level of solvent in the recovered solvent storage tank. The storage tank should have an accurate, easily readable level indicator. To improve the

precision of the volume measurement, it is recommended that the recovered solvent tank have a relatively small diameter, so that small changes in volume result in greater changes in tank level. Alternatively, the solvent recovered may be measured directly by using a liquid volume meter in the solvent return line. Adjustments to the amount of solvent recovered may be needed to match the format of the applicable regulation. For example, if the regulation applies to only certain unit operations in a plant, then the contributions of other VOC sources must be subtracted from the total amount of solvent recovered. When measuring the recovered solvent, special techniques may be required if the solvent is not well mixed and homogeneous. This may require the measurement of volume of two immiscible liquid phases. These samples of each phase would need to be taken to determine the solvent content. The concentration of solvent in each phase and the volumes would then be used to calculate the total solvent recovered.

The volume of solvent used may be determined from plant inventory and purchasing records or by measuring the level in the solvent storage tank. Alternatively, a liquid volume meter can be used to measure the amount of solvent drawn off from the solvent storage tank. Adjustments to the amount of solvent used may be needed to match the format of the applicable regulation. For example, the regulation may apply to only certain unit operations in a plant, or to only solvent applied at the coater not to solvent used for cleanup.

D.3 MONITORING SYSTEMS AND DEVICES

The purpose of monitoring is to ensure that the emission control system is being properly operated and maintained after the performance test. One can either directly monitor the regulated pollutant, or instead, monitor an operational parameter of the emission control system. The aim is to select a relatively inexpensive and simple method that will indicate that the facility is in continual compliance with the standard.

The three types of vapor processing devices that are expected to be used in the polymeric coating industry are carbon absorbers, condensers,

and incinerators. Possible monitoring approaches and philosophy for each part of the VOC control system are discussed below.

D.3.1 Monitoring of Vapor Process Devices

D.3.1.1 Monitoring in Units of Efficiency. There are presently no demonstrated continuous monitoring systems commercially available which monitor vapor processor operation in the units of efficiency. This monitoring would require measuring not only inlet and exhaust VOC concentrations, but also inlet and exhaust volumetric flow rates. An overall cost for a complete monitoring system is difficult to estimate due to the number of component combinations possible. The purchase and installation cost of an entire monitoring system (including VOC concentratin monitors, flow measurement devices, recording devices, and automatic data reduction) is estimated to be $25,000. Operating costs are estimated at $25,000 per year. Thus, monitoring in the units of efficiency is not recommended due to the potentially high cost and lack of a demonstrated monitoring system.

D.3.1.2 Monitoring in Units of Mass Emitted. Monitoring in units of mass of VOC emitted would require concentration and flow measurements only at the exhaust location, as discussed above. This type of monitoring system has not been commercially demonstrated. The cost is estimated at $12,500 for purchase and installation plus $12,500 annually for operation, maintenance, calibration, and data reduction.

D.3.1.3 Monitoring of Exhaust VOC Concentration. Monitoring equipment is commercially available to monitor the operational or process variables associated with vapor control system operation. The variable which would yield the best indication of system operation is VOC concentration at the processor outlet. Extremely accurate measurements would not be required because the purpose of the monitoring is not to determine the exact outlet emissions but rather to indicate operational and maintenance practices regarding the vapor processor. Thus, the accuracy of a FIA (Method 25A) type instrument is not needed, and less accurate, less costly instruments which use different detection principles are acceptable. Monitors for this type of continuous VOC measurements, including a continuous recorder, typically cost about $6,000 to purchase and install, and $6,000 annually to calibrate, operate, maintain, and

reduce the data. To achieve representative VOC concentration measurements at the processor outlet, the concentration monitoring device should be installed in the exhaust vent at least two equivalent stack diameters from the exit point, and protected from any interferences due to wind, weather, or other processes.

In addition to monitoring the exhaust only, the inlet to the vapor control system can be monitored. This data will provide insight to the performance of the recovery system and indicate whether increases in exhaust VOC concentrations are due to process variables or improper operation of the control device. The increase in cost would be primarily associated with the capital cost of an additional continuous VOC monitor (i.e., less than $6,000). The annual operation cost should not be much greater than the costs for a single analyzer. The EPA does not currently have any experience with continuous monitoring of VOC exhaust concentration of vapor processing units in the polymeric industry. Therefore, performance specifications for the sensing instruments cannot be recommended at this time. Examples of such specifications that were developed for sulfur dioxide and nitrogen oxides continuous instrument systems can be found in Appendix B of 40 CFR 60.

D.3.1.4 Monitoring of Process Parameters. For some vapor processing systems, there may be another process parameter besides the exhaust VOC concentration which is an accurate indicator of system operation. Because control system design is constantly changing and being upgraded in this industry, all acceptable process parameters for all systems cannot be specified. Substituting the monitoring of vapor processing systems process parameters for the monitoring of exhaust VOC concentration is valid and acceptable if it can be demonstrated that the value of the process parameter is an indicator of proper operation of the vapor processing system. However, a disadvantage of parameter monitoring alone is that the correlation of the parameters with the numerical emission limit is not exact. Monitoring of any such parameters would have to be approved by enforcement officials on a case-by-case basis. Parameter monitoring equipment would typically cost about $2,000 plus $3,000 annually to operate, maintain, periodically calibrate, and reduce the data into the desired format. Temperature monitoring equipment is somewhat

less expensive. The cost of purchasing and installing an accurate temperature measurement device and recorder is estimated at $1,500. Operating costs, including maintenance, calibration, and data reduction, would be about $1,500 annually.

D.3.1.5 Monitoring of Carbon Adsorbers. For carbon absorption vapor processing devices, the preferred monitoring approach is the use of a continuous VOC exhaust concentration monitor. However, as discussed above, no such general monitor has been demonstrated for the many different organic compounds encountered in this industry. Alternatively, the carbon bed temperature (after regeneration and completion of any cooling cycles), and the amount of steam used to regenerate the bed have been identified as indicators of produce recovery efficiency. Temperature monitors and steam flow meters which indicate the quantity of steam used over a period of time are available.

D.3.1.6 Monitoring of Condensers. For condenser devices, the temperature of the exhaust stream has been identified as an indicator of product recovery efficiency, and condenser temperature monitors are available.

D.3.1.7 Monitoring of Incinerators. For incineration devices, the exhaust concentration is quite low and is difficult to measure accurately with the inexpensive VOC monitors. Instead, the firebox temperature has been identified and demonstrated to be a process parameter which reflects level of emissions from the device. Thus, temperature monitoring is the recommended monitoring approach for incineration control devices. Since a temperature monitor is usually included as a standard feature for incinerators, it is expected that this monitoring requirement will not incur additional costs to the plant.

D.3.1.8 Use of Monitoring Data. The use of monitoring data is the same regardless of whether the VOC outlet concentration or an operational parameter is selected to be monitored. The monitoring system should be installed and operating properly before the first performance test. Continual surveillance is achieved by comparing the monitored value of the concentration or parameter to the value which occurred during the last successful performance test, or alternatively, to a preselected value which is indicative of good operation. It is important to note that a

high monitoring value does not positively confirm that the facility is out of compliance; instead, it indicates that the emission control system or the coating process is operating in a different manner than during the last successful performance test.

The averaging time for monitoring purposes should be related to the time period for the performance test.

D.3.2 Monitoring of Vapor Capture Systems

D.3.2.1 Monitoring in Units of Efficiency. Monitoring the vapor capture system in the units of efficiency would be a difficult and costly procedure. This monitoring approach would require measuring the VOC concentration and volumetric flow rate in the inlet to the vapor processing device and in each fugitive VOC vent and then combining the results to calculate an efficiency for each time period. Such a monitoring system has not been commercially demonstrated. The purchase and installation of an entire monitoring system is estimated at $12,500 per stack, with an additional $12,500 per stack per year for operation, maintenance, calibration, and data reduction. Thus, monitoring in the units of efficiency is not recommended.

D.3.2. Monitoring of Flow Rates. As an alternative to monitoring efficiency, an operational parameter could be monitored instead. The key to a good capture system is maintaining proper flow rates in each vent. Monitoring equipment is commercially available which could monitor these flow rate parameters. Flow rate monitoring equipment for each vent would typically cost about $3,000 plus $3,000 annually to operate, maintain, periodically calibrate, and reduce the data into the desired format. The monitored flow rate values are then compared to the monitored value during the last successful performance test.

Proper flow rates and air distribution in a vapor capture system could also be ensured by an inspection and maintenance program, which generally would not create any additional cost burden for a plant. In that case, the additional value of information provided by flow rate monitors would probably be minimal. Routine visual inspections of the fan's operation would indicate whether or not capture efficiencies remain at the performance test level, and no formal monitoring of the air distribution system would be required.

If a total enclosure is specified in the applicable regulation to ensure proper capture, then the proper operation of the total enclosure can be monitored. Examples of monitoring devices include VOC concentratioon detectors inside the enclosure, pressure sensors inside the enclosure, flow rate meters in ducts, and fan amperage meters.

D.3.3 Monitoring of Overall Control System Efficiency on a Liquid Basis

If a plant uses a vapor recovery control device, the efficiency of the overall plant control (combined vapor capture and vapor recovery systems) can be monitored using a liquid material balance. (These amounts may need to be adjusted to match the format of the applicable regulation.) The amount of solvent used is compared to the amount of solvent recovered. These values are obtained from a plant's inventory records. For this monitoring approach, the averaging time or monitoring period usually needs to be 1 week to 1 month. This longer averaging period is necessary to coordinate with a plant's inventory accounting system and to eliminate short-term variations due to process upsets, solvent spills, and variable amounts of solvent in use in the process.

Because most plants already keep good solvent usage and inventory records, no additional cost to the plant would be incurred for this monitoring approach.

D.3.4 Monitoring of Coatings

If a plant elects to use low-solvent content coatings in lieu of control devices, then the VOC content of the coatings should be monitored. There is no simplified way to do this. Instead, the recommended monitoring procedure is the same as the performance test: the plant must keep records of the VOC content and amount of each coating used and calculate the weighted average VOC content over the time period specified in the regulation. As an alternative, the plant could set up a sampling program so that random samples of coatings would be analyzed using Reference Method 24.

D.4 TEST METHOD LIST AND REFERENCES

The EPA testing methods that are mentioned in this Appendix are listed below with their complete title and reference.

D.4.1 Reference Methods in Appendix A - 40 CFR 60

Method 1 - Sample and Velocity Traverses for Stationary Sources.

Method 2 - Determination of Stack Gas Velocity and Volumetric Flow Rate (Type S Pitot Tube).

Method 2A - Direct Measurement of Gas Volume Through Pipes and Small Ducts.

Method 3 - Gas Analysis for Carbon Dioxide, Excess Air, and Dry Molecular Weight.

Method 4 - Determination of Moisture in Stack Gases.

Method 18 - Measurement of Gaseous Organic Compound Emissions by Gas Chromatography.

Method 21 - Determination of Volatile Organic Compound Leaks.

Method 24 - Determination of Volatile Matter Content, Water Content, Density, Volume Solids, and Weight Solids of Surface Coatings.

Method 24A - Determination of Volatile Matter Content and Density of Printing Inks and Related Coatings.

Method 25 - Determination of Total Gaseous Nonmethane Organic Emissions as Carbon.

Method 25A - Determination of Total Gaseous Organic Concentration Using a Flame Ionization Analyzer.

Method 25B - Determination of Total Gaseous Organic Concentration Using a Nondispersive Infrared Analyzer.

D.4.2 Proposed Methods for Appendix A - 40 CFR 60

Method 1A - Sample and Velocity Traverses for Stationary Sources With Small Stacks or Ducts (Proposed on 10/21/83, 48 FR 48955).

Method 2C - Determination of Stack Gas Velocity and Volumetric Flow Rate From Small Stacks and Ducts (Standard Pilot Tube) (Proposed on 10/21/83, 48 FR 48956).

Method 2D - Measurement of Gas Volume Flow Rates in Small Pipes and Ducts (Proposed on 10/21/83, 48 FR 48957).

D.4.3 Other Methods

"General Measurement of Total Gaseous Organic Compound Emissions Using a Flame Ionization Analyzer," in "Measurement of Volatile Organic Compounds Supplement 1," OAQPS Guideline Series, EPA Report No. 450/3-82-019, July 1982.

TECHNICAL REPORT DATA

(Please read Instructions on the reverse before completing)

1. REPORT NO.	2.	3. RECIPIENT'S ACCESSION NO.
EPA-450/3-85-022a		

4. TITLE AND SUBTITLE	5. REPORT DATE
Polymeric Coating of Supporting Substrates-Background Information for Proposed Standards	April 1987
	6. PERFORMING ORGANIZATION CODE
7. AUTHOR(S)	8. PERFORMING ORGANIZATION REPORT NO.
9. PERFORMING ORGANIZATION NAME AND ADDRESS Office of Air Quality Planning and Standards U. S. Environmental Protection Agency Research Triangle Park, North Carolina 27711	10. PROGRAM ELEMENT NO.
	11. CONTRACT/GRANT NO. 68-02-3817
12. SPONSORING AGENCY NAME AND ADDRESS DAA for Air Quality Planning and Standards Office of Air and Radiation U. S. Environmental Protection Agency Research Triangle Park, North Carolina 27711	13. TYPE OF REPORT AND PERIOD COVERED Draft
	14. SPONSORING AGENCY CODE EPA/200/04

15. SUPPLEMENTARY NOTES

16. ABSTRACT

Standards of performance for the control of VOC emissions from the polymeric coating of supporting substrates are being proposed under the authority of Section 111 of the Clean Air Act. These standards would apply to all new, modified, or reconstructed polymeric coating lines using at least 110 cubic meters of solvent per year in the production of polymeric-coated supporting substrates. This document contains background information and environmental and economic impact assessments of the regulatory alternatives considered in developing the proposed standards.

17. KEY WORDS AND DOCUMENT ANALYSIS

a. DESCRIPTORS	b. IDENTIFIERS/OPEN ENDED TERMS	c. COSATI Field/Group
Air Pollution Pollution Control Standards of Performance Volatile Organic Compounds Web Coating Polymeric Coating of Supporting Substrates	Air Pollution Control	13B

18. DISTRIBUTION STATEMENT	19. SECURITY CLASS *(This Report)*	21. NO. OF PAGES
Unlimited	Unclassified	312
	20. SECURITY CLASS *(This page)*	22. PRICE
	Unclassified	