United States
Environmental Protection
Agency

Office of Air Quality
Planning and Standards
Research Triangle Park NC 27711

EPA-450/3-79-001
January 1979

Air

EPA

Electric Utility Steam Generating Units - Flue Gas Desulfurization Capabilities as of October 1978

NSPS

EPA-450/3-79-001

Electric Utility Steam Generating Units - Flue Gas Desulfurization Capabilities As of October 1978

by

B.A. Laseke, Jr.

PEDCo Environmental Inc.
11499 Chester Road
Cincinnati, Ohio 45246

Contract No. 68-02-2811

EPA Project Officer: Kenneth Woodard

Emission Standards and Engineering Division

Prepared for

U.S. ENVIRONMENTAL PROTECTION AGENCY
Office of Air, Noise, and Radiation
Office of Air Quality Planning and Standards
Research Triangle Park, North Carolina 27711

January 1979

This report has been reviewed by the Emission Standards and Engineering Division of the Office of Air Quality Planning and Standards, EPA, and approved for publication. Approval does not signify that the contents necessarily reflect the views and policies of the Environmental Protection Agency, nor does mention of trade names or commercial products constitute endorsement or recommendation for use. Copies of this report are available through the Library Services Office (MD-35), U.S. Environmental Protection Agency, Research Triangle Park, N.C. 27711, or from National Technical Information Services, 5285 Port Royal Road, Springfield, Va. 22161.

Publication No. EPA-450/3-79-001

ABSTRACT

This study updates the previously published final report, "Flue Gas Desulfurization System Capabilities for Coal-Fired Steam Generators," EPA-600/7-78-032b, published in March 1978. This assessment was made by reviewing the changes and developments in the technology since the preparation of the March 1978 report. A substantial increase in the number and capacity of operational FGD systems, plus the additional operational experience obtained by previously identified operational systems, have resulted in a substantial increase in the amount of design and performance information. Most notably, these include dependability (availability, operability, reliability, and utilization) data, removal efficiency data (sulfur dioxide and particulate), operating problem and solution data, results from various research, development, and demonstration programs, and process and design innovations for new systems. Virtually all of the FGD operating experience gained to date has been with the wet-phase, nonregenerable, lime/limestone processes. As a direct result of this previous experience, the systems committed for operation within the next 3 to 5 years also show an overwhelming preference for lime/limestone processes. Analysis of the current status of the technology indicates that the design and operating experience gained with the first and second generation FGD systems has resulted in improved design and operation of subsequent installations. Because FGD systems that are being engineered and/or erected will incorporate many or all of these design innovations, even better performance can be expected without substantial cost increase.

CONTENTS

	Page
Abstract	iii
Acknowledgment	xv
Figures	v
Tables	ix
1. Introduction	1-1
1.1 Application of FGD Technology in the United States	1-1
1.2 Application of FGD Technology in Japan	1-8
1.3 Comparison of FGD Technology Development in the United States and Japan	1-17
2. Operational FGD Systems	2-1
2.1 Lime Slurry FGD Systems	2-1
2.2 Limestone Slurry FGD Systems	2-45
2.3 Wellman Lord FGD Systems	2-142
2.4 Other FGD Systems	2-155
3. Continuous SO_2 Monitors	3-1
4. Performance and Dependability of FGD Systems	4-1
4.1 Current Technological Trends	4-1
4.2 Recent Trends in the Dependability of the Technology	4-33
4.3 Trends in Manufacturer's Guarantees	4-36
4.4 Summary of Sulfur Dioxide Removal Efficiency	4-38
Appendices	
A. Domestic Lime Slurry FGD Scrubbing Systems	A-1
B. Domestic Limestone Slurry FGD Scrubbing Systems	B-1
C. Summary of Changes: August 1977 to October 1978	C-1

FIGURES

Number		Page
1-1	Projections of coal-fired electrical generating capacity from 1975 to 1990 and FGD capacity from 1975 to 1986.	1-5
1-2	FGD systems in Japan from 1970 through 1977.	1-14
1-3	Trend in average ambient SO_2 concentration in Japan from 1965 through 1975.	1-16
2-1	Process flow diagram for Green River 1, 2, and 3.	2-4
2-2	Scrubber system operability - Green River 1, 2, and 3.	2-8
2-3	Schematic of the process lines and major components of the Bruce mansfield air quality and waste disposal system.	2-12
2-4	FGD system availability, Pennsylvania Power, Bruce Mansfield 1.	2-20
2-5	FGD system availability, Pennsylvania Power, Bruce Mansfield 2.	2-21
2-6	Conesville 5 and 6, simplified process diagram.	2-27
2-7	Scrubber system operability, Columbus and Southern Ohio Electric, Conesville 5.	2-28
2-8	Scrubber system operability, Columbus and Southern Ohio Electric, Conesville 6.	2-30
2-9	Simplified process flow diagram, Cane Run 4.	2-35
2-10	Simplified process flow diagram, Cane Run 5.	2-35
2-11	Scrubber system operability, Louisville Gas and Electric, Cane Run 4.	2-39
2-12	Scrubber system operability, Louisville Gas and Electric, Cane Run 5.	2-41

FIGURES (continued)

Number		Page
2-13	Availability history of La Cygne 1, Kansas City Power and Light.	2-51
2-14	Flow diagram of one of the eight FGD modules at La Cygne 1.	2-52
2-15	La Cygne limestone wet scrubbing system.	2-53
2-16	Simplified process diagram for Northern States Power Co., Sherburne 1 and 2 FGD system.	2-56
2-17	Simplified diagram of a Sherburne scrubber module	2-57
2-18	Availability history of Sherburne 1 and 2, Northern States Power Company	2-64
2-19	Simplified process flow diagram, Cholla 1 FGD system.	2-77
2-20	Simplified process flow diagram of Module A, Cholla 1 FGD system.	2-78
2-21	Reliability history of Cholla 1, Arizona Public Service, from January 1974 through December 1975	2-88
2-22	Reliability of Cholla 1, Arizona Public Service, from January 1976 through December 1977.	2-89
2-23	Reliability history of Cholla 1, Arizona Public Service, from January through August 1978.	2-90
2-24	Cutaway view of a Duck Creek 1 FGD scrubber module	2-94
2-25	Duck Creek 1 FGD system scrubbing circuit.	2-97
2-26	Simplified process flow diagram of Duck Creek 1 power plant and emission control system.	2-98
2-27	Simplified process flow diagram of one of the two Lawrence 4 scrubbing modules.	2-113

FIGURES (continued)

Number		Page
2-28	Simplified process flow diagram of one of the two Lawrence 5 scrubbing modules	2-114
2-29	Simplified process flow diagram of Southwest 1, Springfield City Utilities.	2-118
2-30	A schematic of TVA Widows Creek 8 FGD System.	2-123
2-31	A simplified process flow diagram of TVA Widows Creek 8 FGD system.	2-124
2-32	Availability of TVA Widows Creek 8 FGD system.	2-129
2-33	Simplified flow diagram of Martin Lake 1 and 2 FGD systems.	2-135
2-34	Scrubber system availability, Northern Indiana Public Service, Dean H. Mitchell 11.	2-145
2-35	Process diagram of FGD module at Montana Power Co. Colstrip 1 and 2.	2-159
2-36	FGD system availability, Montana Power, Colstrip 1.	2-168
2-37	FGD system availability, Montana Power, Colstrip 2.	2-169
2-38	Process diagram of an FGD system, Nevada Power Co., Reid Gardner Station.	2-181
2-39	FGD system availability, Nevada Power Co., Reid Gardner.	2-186
2-40	FGD system availability, Nevada Power Co., Reid Gardner.	2-187
2-41	FGD system availability, Nevada Power Co., Reid Gardner 3.	2-188
2-42	Jet bubbling reactor.	2-190
2-43	Process flow diagram of prototype plant, Gulf Power Co., Sholz Station.	2-194

FIGURES (continued)

Number		Page
2-44	Dry phase collection with nahcolite injection.	2-197
2-45	Process flow diagram of two-stage dry scrubber/SO_2 absorber.	2-200
2-46	Carborundum/DeLaval dry phase collection system.	2-203
2-47	Joy Manufacturing/Niro Atomizer dry phase collection process.	2-204
4-1	Average plant FGD dependability versus startup date.	4-34
A-1	Summary of Four Corners 2A Scrubber Module Isolation Testing: Effect of pH on SO_2 removal.	A-6

TABLES

Number		Page
1-1	Number and Capacity of U.S. Utility FGD Systems in August 1977 and October 1978	1-3
1-2	Capacity of Committed U.S. Utility FGD Systems as October 1978	1-7
1-3	Number and Capacity of FGD Systems in Japan as of January 1978	1-9
2-1	Major Domestic Operational Lime Slurry FGD Systems	2-2
2-2	Green River Power Station, Operational Data for 1977 through September 1978	2-6
2-3	Green River Power Station, Operational Data for September 1977 to September 1978	2-7
2-4	Summary of Sulfur Dioxide Emission Rates	2-9
2-5	FGD Systems Data for Bruce Mansfield 1 and 2 Shippingport, Pennsylvania	2-11
2-6	Performance Data on Bruce Mansfield 1 FGD System, Pennsylvania Power	2-18
2-7	Performance Data on Bruce Mansfield 2 FGD System, Pennsylvania Power	2-19
2-8	FGD System Data for Conesville 5 and 6, Conesville, Ohio	2-25
2-9	Performance Information on Conesville 5, Columbus and Southern Ohio Electric	2-29
2-10	Performance Data on Conesville 6, Columbus and Southern Ohio Electric	2-31
2-11	FGD Systems Data for Cane Run 4, Louisville, Kentucky	2-34
2-12	FGD Systems Data for Cane Run 5, Louisville, Kentucky	2-36

TABLES (continued)

Number		Page
2-13	Operating Data on Cane Run 4, Louisville Gas and Electric	2-40
2-14	Operating Data on Cane Run 5, Louisville Gas and Electric	2-42
2-15	Major Domestic Operational Limestone FGD Installations	2-46
2-16	La Cygne Station Unit No. 1 4-Hour Full Load and Stack Emission Test	2-54
2-17	Sherburne 1 Performance Summary: May 1976 to September 1978	2-65
2-18	Sherburne 1 Performance Summary From October 1977 to September 1978	2-67
2-19	Sherburne 2 Performance Summary from April 1977 to September 1978	2-68
2-20	Sherburne 2 Performance Summary from October 1977 to September 1978	2-69
2-21	FGD Systems Data for Cholla 1, Joseph City, Arizona	2-72
2-22	FGD Systems Data for Cholla 2, Joseph City, Arizona	2-73
2-23	Cholla 1 Performance Summary January 1974 to September 1978	2-85
2-24	FGD Systems Data for Duck Creek 1, Canton, Illinois	2-93
2-25	Results of the D-Scrubber Module Test	2-103
2-26	FGD Systems Data for Lawrence 4, Lawrence, Kansas	2-106
2-27	FGD Systems Data for Lawrence 5, Lawrence, Kansas	2-107

TABLES (continued)

Number		Page
2-28	FGD Systems Data for Southwest 1, Springfield, Missouri	2-117
2-29	FGD Systems Data for Windows Creek 8, Bridgeport, Alabama	2-121
2-30	FGD System Performance of TVA Widows Creek 8	2-130
2-31	Preliminary Scrubber Sulfur Dioxide Removal Test Data for Widows Creek 8	2-131
2-32	FGD Systems Data for Martin Lake 1, Tatum, Texas	2-133
2-33	FGD Systems Data for Martin Lake 2, Tatum, Texas	2-134
2-34	Domestic Operational Wellman Lord FGD Installations	2-143
2-35	Performance Data for Dean H. Mitchell 11, Northern Indiana Public Service	2-147
2-36	FGD Systems Data for San Juan 1 and 2 Waterflow, New Mexico	2-152
2-37	FGD Systems Data for Colstrip 1, Colstrip, Montana	2-157
2-38	FGD Systems Data for Colstrip 2, Colstrip, Montana	2-158
2-39	Background Information for SO_2 Emissions at Colstrip 1 and 2	2-164
2-40	Tests of SO_2 Emissions at Colstrip 1	2-166
2-41	Tests of SO_2 Emissions at Colstrip 2	2-167
2-42	Scrubber Availability for Colstrip 1 and 2	2-170
2-43	FGD System Data for Milton R. Young 2, Center, North Dakota	2-172

TABLES (continued)

Number		Page
2-44	FGD Systems Data for Reid Gardner 1, Moapa, Nevada	2-177
2-45	FGD Systems Data for Reid Gardner 2, Moapa, Nevada	2-178
2-46	FGD Systems Data for Reid Gardner 3, Moapa, Nevada	2-179
2-47	FGD Performance Data, Nevada Power Co., Reid Gardner 1	2-183
2-48	FGD Performance Data, Nevada Power Co., Reid Gardner 2	2-184
2-49	FGD Performance Data, Nevada Power Co., Reid Gardner 3	2-185
2-50	FGD Systems for Scholz 1 and 2, Chattahoochee, Florida	2-192
2-51	Dry Powder Nahcolite Injection Versus Two-Stage Soda Ash System	2-202
3-1	Identification of FGD Units with Continuous SO_2 Monitors	3-2
3-2	Summary of the Performance of Continuous SO_2 Monitors	3-6
3-3	Companies Known to Record Continuous SO_2 Monitoring Data	3-9
4-1	Identification of Plants in Figure 4-1	4-35
4-2	U.S. Utility FGD Systems Achieving or Exceeding 90% Sulfur Dioxide Removal	4-39
A-1	Summary of Four Corners 2A Scrubber Module Isolation Testing Service in February and March 1976	A-5
A-2	FGD System Data for Conesville 5 and 6, Conesville, Ohio	A-9

TABLES (continued)

Number		Page
A-3	FGD System Data for Elrama Power Station, Elrama, Pennsylvania	A-12
A-4	FGD System Data for Phillips Power Station, South Height, Pennsylvania	A-15
A-5	FGD System Data for Hawthorn 3 and 4, Kansas City, Missouri	A-19
A-6	FGD System Data for Green River 1, 2, and 3, Central City, Kentucky	A-21
A-7	FGD System Data for Cane Run 4, Louisville, Kentucky	A-25
A-8	FGD System Data for Cane Run 5, Louisville, Kentucky	A-28
A-9	FGD System Data for Mill Creek 3, Louisville, Kentucky	A-30
A-10	FGD System Data Milton R. Young 2, Center, North Dakota	A-37
A-11	Background Information for SO_2 Emissions at Colstrip 1 and 2	A-43
A-12	Tests of SO_2 Emissions at Colstrip 1	A-44
A-13	Tests of SO_2 Emissions at Colstrip 2	A-45
A-14	FGD System Data for Bruce Mansfield 1 and 2, Shippingport, Pennsylvania	A-47
A-15	Summary of Emission Control System at Bruce Mansfield 3	A-50
A-16	FGD Systems Data for Huntington 1, Price, Utah	A-58
B-1	FGD System Data for Tombigbee 2	B-5
B-2	FGD System Data for Apache 2	B-8

TABLES (continued)

Number		Page
B-3	FGD System Data for Cholla 1	B-13
B-4	FGD System Data for Cholla 2	B-14
B-5	FGD System Data for Duck Creek 1	B-20
B-6	FGD System Data for Scholz 1 and 2	B-25
B-7	FGD System Data for Petersburg 3	B-29
B-8	FGD system Data for La Cygne 1	B-35
B-9	FGD System Data for Jeffrey 1	B-38
B-10	FGD System Data for Lawrence 4	B-43
B-11	FGD System Data for Lawrence 5	B-44
B-12	FGD System Data for Sherburne 1	B-49
B-13	FGD System Data for Sherburne 2	B-50
B-14	FGD System Data for Winyah 2	B-56
B-15	FGD System Data for R. D. Morrow 1	B-60
B-16	FGD System Data for Southwest 1	B-63
B-17	FGD System Data for Widows Creek 8	B-68
B-18	FGD System Data for Martin Lake 1	B-75
B-19	FGD System Data for Martin Lake 2	B-76
B-20	FGD System Data for Monticello 3	B-82

ACKNOWLEDGMENT

This report was prepared under the direction of Mr. Richard W. Gerstle. The principal authors were Mr. Bernard A. Laseke, Jr., Mr. Michael T. Melia, Mr. Michael P. Smith, and Mr. T. S. Koger. Project Officer for the Environmental Protection Agency was Mr. Kenneth Woodard. The authors appreciate the contributions made by Mr. Woodard, and also Mr. Kenneth R. Durkee of the Environmental Protection Agency.

SECTION 1

INTRODUCTION

Early in 1977, the U.S. Environmental Protection Agency (EPA) undertook a program to review and revise the existing New Source Performance Standards (NSPS) limiting sulfur dioxide (SO_2) emissions from large fossil-fuel-fired steam generators. The existing emission regulation was first promulgated in 1971. As a result of the Clean Air Act (CAA) ammendments of 1977, the EPA was mandated to review this regulation in light of new technology. The EPA's Office of Air Quality Planning and Standards (OAQPS) had prime responsibility for the review, which formed a basis for determining revisions to the existing NSPS level.

To develop background information for support of this review, the EPA contracted with PEDCo Environmental to study the capabilities of flue gas desulfurization (FGD) technology. This study was conducted between May 1977 and February 1978. A final report, "Flue Gas Desulfurization System Capabilities for Coal-Fired Steam Generators," EPA-600/7-78-032 a and b, was published in March 1978.

The most recent information published in the March 1978 report was as August 1977. This report discusses changes in FGD technology that occurred from August 1977 to October 1978.

1.1 APPLICATION OF FGD TECHNOLOGY IN THE UNITED STATES

1.1.1 Current Level of Development

As of October 1978, there were 143 utility FGD systems with an equivalent electrical generating capacity of 61,732 MW in operation, under construction, or planned in the United States.

Of these systems, 46 were operational (16,054 MW); 39 were under construction (16,728 MW); and 58 systems were planned (28,950 MW).[1]

A number of plants that will use FGD systems are omitted because such information is not ready for public release. From 55 to 60 systems with an equivalent electrical generating capacity between 36,000 and 41,000 MW fall into this category.[2]

To date, 16 systems representing approximately 1555 MW have been shut down.[3] Some (425 MW), however, continue to remove fly ash and some SO_2 (from 35 to 50 percent), because alkaline additives are still added to the scrubbing solution for pH control.[4]

1.1.2 Changes From August 1977 to October 1978

As of August 1977, there were 125 utility FGD systems with an equivalent electrical generating capacity of 53,352 MW in operation, under construction, or planned. Of these systems, 29 were operational (8,914 MW); 28 were under construction (11,810 MW); and 68 systems were planned (32,628 MW).[5]

The total number and capacity of U.S. utility FGD systems in August 1977 and October 1978 are provided in Table 1-1, which summarizes changes in these totals. This table shows that the number of operational FGD systems increased by approximately 60 percent and the capacity of such systems, by 80 percent. It also indicates that the number and capacity of FGD systems under construction each increased by approximately 40 percent. According to Table 1-1, the number of FGD systems in the planning stage (contract awarded, letter of intent signed, requesting or evaluating bids, and considering FGD) decreased by approximately 15 percent; and the capacity of such systems decreased by 11 percent. If, however, the FGD systems that are omitted at the present time because information about them is not ready for public release are taken into account, the number of FGD systems in the planning stage increases to at least 113; and the capacity of planned systems, to 65,000 MW. These values represent approximately a 66

TABLE 1-1. NUMBER AND CAPACITY OF U.S. UTILITY FGD SYSTEMS IN AUGUST 1977 AND OCTOBER 1978

Status	August 1977		October 1978		Changes	
	No.	MW	No.	MW	No.	MW
Operational	29	8,914	46	16,054	+17	+7,140
Under construction	28	11,810	39	16,728	+11	+4,918
Planned:						
Contract awarded	23	11,880	23	12,450		+570
Letter of intent signed	5	1,892	1	240	-4	-1,652
Requesting or evaluating bids	5	2,825	6	3,650	+1	+825
Considering FGD	35	16,031	28	12,610	-7	-3,421
Total	125	53,352	143	61,732	+18	+8,380

percent increase in the number of systems and a 125 percent increase in capacity.*

A summary of the individual units that changed status between August 1977 and October 1978 is provided in Appendix C of this report.

Several other trends have been detected during the interim period. As Figure 1-1 shows, coal-fired electrical generating capacity in the United States increased by 6 percent from 250,000 MW in late 1977 to approximately 265,000 MW by late 1978. Figure 1-1, which was developed from several sources, also indicates that the application of FGD systems increased from 3.5 percent of the total coal-fired capacity in September 1977 to 6 percent a year later.[6]

More low-sulfur coal is being fired than before. Low-sulfur coal is defined as coal that, when combusted, will emit no more than 516 ng/J (1.2 lb/10^6 Btu) of SO_2, the existing NSPS limit. High-sulfur coal is defined as coal that will cause higher emissions. Approximately 90 percent of the August 1977 operating capacity (8914 MW) came from units firing high-sulfur coal, but only 81 percent of the operating capacity 1 year later was supplied by such units.

Approximately 50 percent of the current committed FGD capacity is designed to meet existing NSPS. This was true of only 42 percent of committed FGD capacity in August 1977.

1.1.3 Process Selection

Chemical process in this report refers to the reagent used to scrub SO_2 from the flue gas stream. The major generic chemical processes available for commercial application in the United States rely on limestone, lime, sodium, and magnesium. These reagents are used in eight major process designs: direct limestone, direct lime, sodium carbonate, magnesium oxide, sodium/

---

* As already mentioned, from 55 to 60 systems with an equivalent electrical generating capacity between 36,000 and 41,000 MW are planned, but not yet publicly announced. The lower estimates for both number and capacity have been used to calculate the increase suggested.

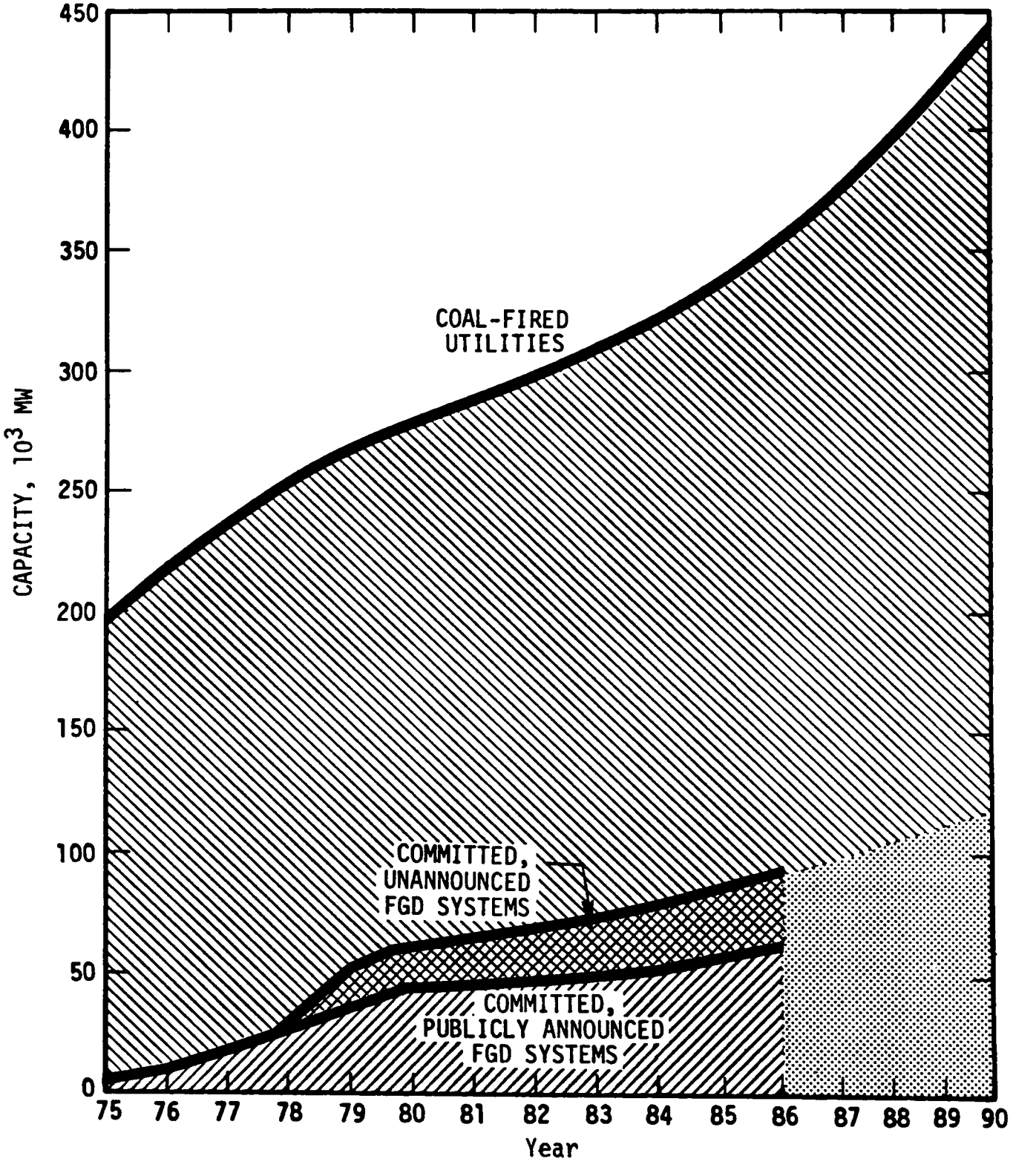

Figure 1-1. Projections of coal-fired electrical generating capacity from 1975 to 1990 and FGD capacity from 1975 to 1986.

thermal regeneration (Wellman Lord), sodium/calcium double alkali, aqueous carbonate, and citrate.

Table 1-2 summarizes the systems that are operational, under construction, and planned according to committed process type as of October 1978.[7] Of the total active committed capacity of 50,827 MW, calcium-based (limestone/lime) process designs account for 44,980 MW, or 88.5 percent of the total.

The utility industry has preferred limestone to lime processes, primarily because of economic considerations. This preference is expected to continue for the next few years. In August 1977, only 4047 MW of FGD operating capacity relied on limestone; and 4237 MW, on lime.[8] By October 1978, however, 8734 MW of operating capacity came from limestone systems; and 6070 MW, from lime systems. These values constitute 54 percent and 38 percent of the total current operating capacity, respectively. Table 1-2 indicates a strong preference for limestone also among systems under construction, and an even stronger one among systems still being planned.

There are several reasons for the predominance of limestone and lime processes. They have had the most development and commercial operating experience; the first commercial applications of calcium-based FGD technology on flue gas from coal-fired units began in 1968.[9] Also, these processes do not require the sophisticated, multiple loops of many regenerable processes.[10] Limestone is available in practically all parts of the United States. It is a major commodity, ranking second after sand and gravel, and the annual production of limestone is from 5.4 to 6.4 Gg (600 to 700 million tons).[11] The capital and annual costs of limestone and lime processes are generally much less than those of other processes.[12] Furthermore, limestone and lime processes have been designed and used to meet the existing NSPS. These processes have demonstrated an ability to maintain such removal levels when both high- and low-sulfur coals are fired.[13]

TABLE 1-2. CAPACITY OF COMMITTED U.S. UTILITY FGD SYSTEMS AS OCTOBER 1978 (MW)

Process	FGD capacity			
	Operational	Under construction	Planned	Total
Limestone	8,734	8,497	11,488	28,719
Lime	6,070	5,050	4,461	15,581
Lime/limestone	20	330	330	680
Sodium carbonate	375	509	0	884
Magnesium oxide	120	600	726	1,446
Wellman Lord	735	180	940	1,853
Double alkali	0	1,102	0	1,102
Aqueous carbonate[a]	0	400	100	500
Citrate[b]	0	60	0	60
Total	16,054	16,728	18,045[c]	50,825[c]

[a] Includes nonregenerable dry collection process design and regenerable process design configurations.

[b] This system is being installed at St. Joseph Minerals' G.F. Wheaton Plant and is considered a utility FGD system because the plant is connected by a 25-MW interchange to the Duquesne Light Company.

[c] The processes for all planned systems are not known. Thus, the totals in this table are less than those in Table 1-1.

1.2 APPLICATION OF FGD TECHNOLOGY IN JAPAN

1.2.1 Current Level of Development

At the beginning of 1978, there were over 500 major FGD systems in service in Japan with a combined gas capacity greater than 89,000,000 Nm^3/h (52,500,000 scfm). This capacity is equivalent to 25,000 MW of electrical generating capacity.* Table 1-3 summarizes the systems by supplier, process, and capacity.[14,15]

Approximately 500 more operational sodium systems, representing a combined gas capacity of approximately 10,000,000 Nm^3/h (5,900,000 scfm), are not identified in Table 1-3.[16] These additional systems bring the total combined FGD operating capacity in Japan to 99,000,000 Nm^3/h (58,400,000 scfm), which is equivalent to 28,000 MW of electrical generating capacity.

Table 1-3 indicates that approximately 47 percent of the FGD operating capacity in Japan relies on the direct lime/limestone process that produces gypsum as a byproduct, 16 percent on the indirect lime/limestone (double alkali) process that also produces gypsum, 13 percent on regenerable processes that produce sulfuric acid, elemental sulfur, and ammonium sulfate, and 24 percent on once-through sodium processes that produce sodium sulfite or sulfate. Direct lime/limestone systems average 427,000 Nm^3/h (252,000 scfm), or approximately 120 MW; indirect lime/limestone systems, 291,000 Nm^3/h (172,000 scfm) or 80 MW; regenerable systems, 378,000 Nm^3/h (223,000 scfm), or 110 MW; and once-through sodium systems, 59,600 Nm^3/h (35,200 scfm), or 15 MW.[17,18]

Approximately half of Japan's total FGD capacity is installed at utility power plants. By the end of 1978, there were 51 utility FGD systems with an equivalent electrical generating capacity of 12,649 MW in operation, under construction, or planned. Of these systems, 47 were operational (11,224 MW); and

---

* For general considerations, 1 MW is equivalent to approximately 3560 Nm^3/h (2100 scfm).

TABLE 1-3. NUMBER AND CAPACITY OF FGD SYSTEMS IN JAPAN AS OF JANUARY 1978[a]

Plant constructor	Direct lime/limestone		Indirect lime/limestone		Regenerable processes		Once-through sodium		Total	
	No.	$10^3 Nm^3/h$	No.	$10^3 Nm^3/h$	No.	$10^3 Nm^3/h$	No.	$10^3 Nm^3/h$	No.	$10^3 Nm^3/h$
Mitsubishi Heavy Industries (MHI)	33	18,270					3	292	36	18,562
Ishikawajima H.I. (IHI)	17	14,445					79	4,351	96	8,796
Hitachi, Ltd.	13	6,940			2	590	15	603	30	8,133
Mitsubishi Kakoki (MKK)	2	256			13	6,478	41	913	56	7,643
Kawasaki Heavy Industries	4	756	6	5,450			7	256	17	6,380
Tsukishima Kikai (TSK)	1		4	398	1	88	40	4,042	46	4,528
Chiyoda Chemical Engineering & Construction			14	4,459					14	4,459
Oji Koei							57	4,280	57	4,280
Fuji Kasui Engineering	7	3,954					6	270	13	4,224
Kurabo Engineering			5	413	1	18	106	3,751	112	4,182
Mitsui Miike-Chemico	4	2,744			1	500			5	3,244
Ebara Manufacturing			11	1,914			10	1,167	21	3,081
Nippon Kokan (NKK)	3	245	1	150	2	1,990	6	62	12	2,447
Kureha Chemical							8	1,431	8	1,431
Showa Denko							5	1,372	5	1,372
Gadlius							8	1,291	8	1,291
Sumitomo (SCED)-Wellman					6	1,288			6	1,288
Mitsui Metal Engineering	4	1,006			2	130			6	1,136
Kobe Steel	5	1,125							5	1,125
Japan Gasoline	1	330			1	125			2	455
Dowa Engineering			5	453					5	500
Niigata Iron Works			1	185					1	185
Mitsui Shipbuilding							1	160	1	160
Sumitomo Heavy Industries					1	150			1	150
Total	94	40,171	47	13,422	30	11,357	392	24,241	563	89,138

[a] The byproduct of direct lime/limestone and indirect lime/limestone systems is gypsum.

4 were under construction or planned (1425 MW). Table 1-4 provides a summary of the committed full-scale FGD systems applied to power plants in Japan.[21] Table 1-5 indicates the capacity of steam power plants and FGD systems in-service or planned in Japan.[19,20]

As shown in Table 1-5, nine major utility companies, largely using imported oil, have produced about 70 percent of the total steam electric power generated in Japan. The Electric Power Development Company (EPDC) has been the primary consumer of domestic coal for power production, although coal-fired utilities account for less than 3 percent of the total capacity (including plants under construction) of 87,465 MW. Oil- and coal-fired units provide about 75 percent of this total; hydroelectric units, 20 percent; and nuclear units, 5 percent.[21,22]

Tokyo Electric, Kansai Electric, and Chubu Electric supply power to the largest cities and industrial complexes in Japan. As Table 1-5 shows, these companies use such low-sulfur fuels as naphtha and liquid natural gas in heavily polluted sections of their service areas. Recent regulations require large power plants in designated regions to keep SO_2 stack emissions below 50 ppm, so that low-sulfur fuel must be used for reheat. More stringent standards may reduce the use of FGD as an effective control strategy. Hokuriku Electric, however, has power plants located far from large cities and uses FGD on a large percentage of its capacity.[23,24]

1.2.2 FGD Trends

Application of FGD systems in Japan has increased rapidly since 1972, as indicated by Figure 1-2.[25,26] This growth can be largely attributed to elimination of the previous large difference in cost between FGD and low-sulfur fuels and increasing confidence in the reliability of FGD systems.[27,28]

Table 1-4, however, shows that only four new systems are under construction or planned. One cause of this declining growth rate is the reduction of ambient SO_2 concentrations in

TABLE 1-4. OPERATIONAL AND PLANNED UTILITY FGD SYSTEMS IN JAPAN

Power company	Power station	Boiler No.	Boiler MW	FGD MW	Process developer	Absorbent, precipitant	By product	Year of completion
Tohoku	Shinsendai	2	600	150	Kureha-Kawasaki	Na_2SO_3, $CaCO_3$	Gypsum	1974
	Hachinohe	4	250	125	Mitsubishi H.I.	CaO	Gypsum	1974
	Niigata	4	250	125	Wellman-MKK	Na_2SO_3	H_2SO_4	1976
	Niigata H.	1	600	150	Mitsubishi H.I.	$CaCO_3$	Gypsum	1976
	Akita	3	350	350	Kureha-Kawasaki	Na_2SO_3, $CaCO_3$	Gypsum	1977
Tokyo	Kashima	3	600	150	Hitachi-Tokyo	Carbon, $CaCO_3$	Gypsum	1972
	Yokosuka	1	265	133	Mitsubishi H.I.	$CaCO_3$	Gypsum	1974
Chubu	Nishinagoya	1	220	220	Wellman-MKK	Na_2SO_3	H_2SO_4	1973
	Owase	1	375	375	Mitsubishi H.I.	CaO	Gypsum	1976
Hokuriku	Toyama	1	500	250	Chiyoda	CaO H_2SO_4, $CaCO_3$	Gypsum	1974
	Fukui	1	350	350	Chiyoda	H_2SO_4, $CaCO_3$	Gypsum	1975
	Nanao	1	500	500	Not decided	H_2SO_4, $CaCO_3$	Gypsum	1978
Kansai	Sakai	8	250	63	Sumitomo H.I.	Carbon	H_2SO_4	1972
	Amagasaki	2	156	35	Mitsubishi H.I.	CaO	Gypsum	1973
				121	Mitsubishi H.I.	CaO	Gypsum	1975
		1	156	156	Mitsubishi H.I.	CaO	Gypsum	1976
	Osaka	3	156	156	Babcock-Hitachi	$CaCO_3$	Gypsum	1975
		2	156	156	Babcock-Hitachi	$CaC^{\wedge}{}_3$	Gypsum	1975
		4	156	156	Babcock-Hitachi	$CaCO_3$	Gypsum	1976
	Kainan	4	600	150	Mitsubishi H.I.	CaO	Gypsum	1974
Chugoku	Mizushima	2	156	100	Babcock-Hitachi	$CaCO_3$	Gypsum	1974
	Tamashima	3	500	500	Babcock-Hitachi	$CaCO_3$	Gypsum	1975
		2	350	350	Babcock-Hitachi	$CaCO_3$	Gypsum	1976
	Shimonoseki	2	400	400	Mitsubishi H.I.	$CaCO_3$	Gypsum	1976
	(coal)	1	175[a]	175	Mitsubishi H.I.	$CaCO_3$	Gypsum	1979
Hokkaido	Higashitomakomai	1	500	250	Not decided	$CaCO_3$	Gypsum	1981

[a] Coal-fired boilers. Others are for oil-fired boilers.

(continued)

TABLE 1-4 (continued)

Power company	Power station	Boiler No.	Boiler MW	FGD MW	Process developer	Absorbent, precipitant	Byproduct	Year of completion
Shikoku	Anna	3	450	450	Kureha-Kawasaki	Na_2SO_3, $CaCO_3$	Gypsum	1975
	Sakaide	3	450	450	Kureha-Kawasaki		Gypsum	1975
Kyushu	Karita	2	375	188	Mitsubishi H.I.	CaO	Gypsum	1974
	Karatsu	2	375	188	Mitsubishi H.I.	$CaCO_3$	Gypsum	1976
		3	500	250	Mitsubishi H.I.	$CaCO_3$	Gypsum	1976
	Ainoura	1	375	250	Mitsubishi H.I.	$CaCO_3$	Gypsum	1976
		2	500	250	Mitsubishi H.I.	$CaCO_3$	Gypsum	1976
	Buzen	1	500	250	Kureha-Kawasaki	Na_2SO_3, $CaCO_3$	Gypsum	1977
		2	500	250	Kureha-Kawasaki	NA_2SO_3, $CaCO_3$	Gypsum	1978
EPDC	Takasago (coal)	1	250[a]	250	Mitsui-Chemico	$CaCO_3$	Gypsum	1975
	(coal)	2	250[a]	250	Mitsui-Chemico	$CaCO_3$	Gypsum	1976
	Isogo (coal)	1	265[a]	265	Chemico-IHI	$CaCO_3$	Gypsum	1976
	Takehara (coal)	1	250[a]	250	Babcock-Hitachi	$CaCO_3$	Gypsum	1977
	Matsushima (coal)	1	500[a]	500	Not decided	$CaCO_3$	Gypsum	1980
	(coal)	2	500[a]	500	Not decided	$CaCO_3$	Gypsum	1980
Niigata	Niigata	1	350	175	MHI			1975
Showa	Ichihara	1	150	150	Showa Denio	Na_2SO_3, $CaSO_3$	Gypsum	1973
		5	250	250	Babcock-Hitachi	$CaCO_3$	Gypsum	1976
Toyama	Toyama	1	250	250	Chiyoda	H_2SO_4, $CaCO_3$	Gypsum	1975
Mizushima	Mizushima	5	156	156	Mitsubishi H.I.	CaO	Gypsum	1975
Sumitomo	Niihama	3	156	156	IHI	$CaCO_3$	Gypsum	1975
Sakata	Sakata	1	350	350	Mitsubishi H.I.	$CaCO_3$	Gypsum	1976
		2	350	350	Mitsubishi H.I.	$CaCO_3$	Gypsum	1977
Fukui	Fukui	1	250	250	Not decided	$CaCO_3$	Gypsum	1977

[a]Coal-fired boilers. Others are for oil-fired boilers.

TABLE 1-5. CAPACITIES OF STEAM POWER PLANTS AND FGD SYSTEMS IN JAPAN

Power company	Power generation, MW			FGD, MW		
	Existing	Under construction	Total	Existing	Under construction	Total
Hokkaido	1,270	1,225	2,495	0	250	250
Tohoku	4,275	850	5,125	900	0	900
Tokyo	19,167	4,400	23,567	283	0	283
Chubu	9,933	3,800	13,733	970	0	970
Hokuriku	[illegible]	500	2,214	1,100	0	1,100
Kansai	[illegible],672	1,200	11,872	993	0	993
Chugoku	3,777	1,800	5,577	1,350	175	1,525
Shikoku	2,687	450	3,137	900	0	900
Kyushu	5,000	2,200	7,200	1,626	0	1,626
EPDC	1,430	1,000	2,430	1,015	1,000	2,015
Niigata	350	350	700	175	0	175
Showa	550	0	550	400	0	400
Toyama	750	0	750	250	0	250
Mizushima	462	0	462	156	0	156
Sumitomo	368	250	618	156	0	156
Sakata	0	700	700	700	0	700
Fukui	250	0	250	250	0	250
Others	5,512	375	5,887	0	0	0
Total	68,365	19,100	87,645	11,224	1,425	12,649

[a] Includes units in the planning stage as well as those currently under construction.

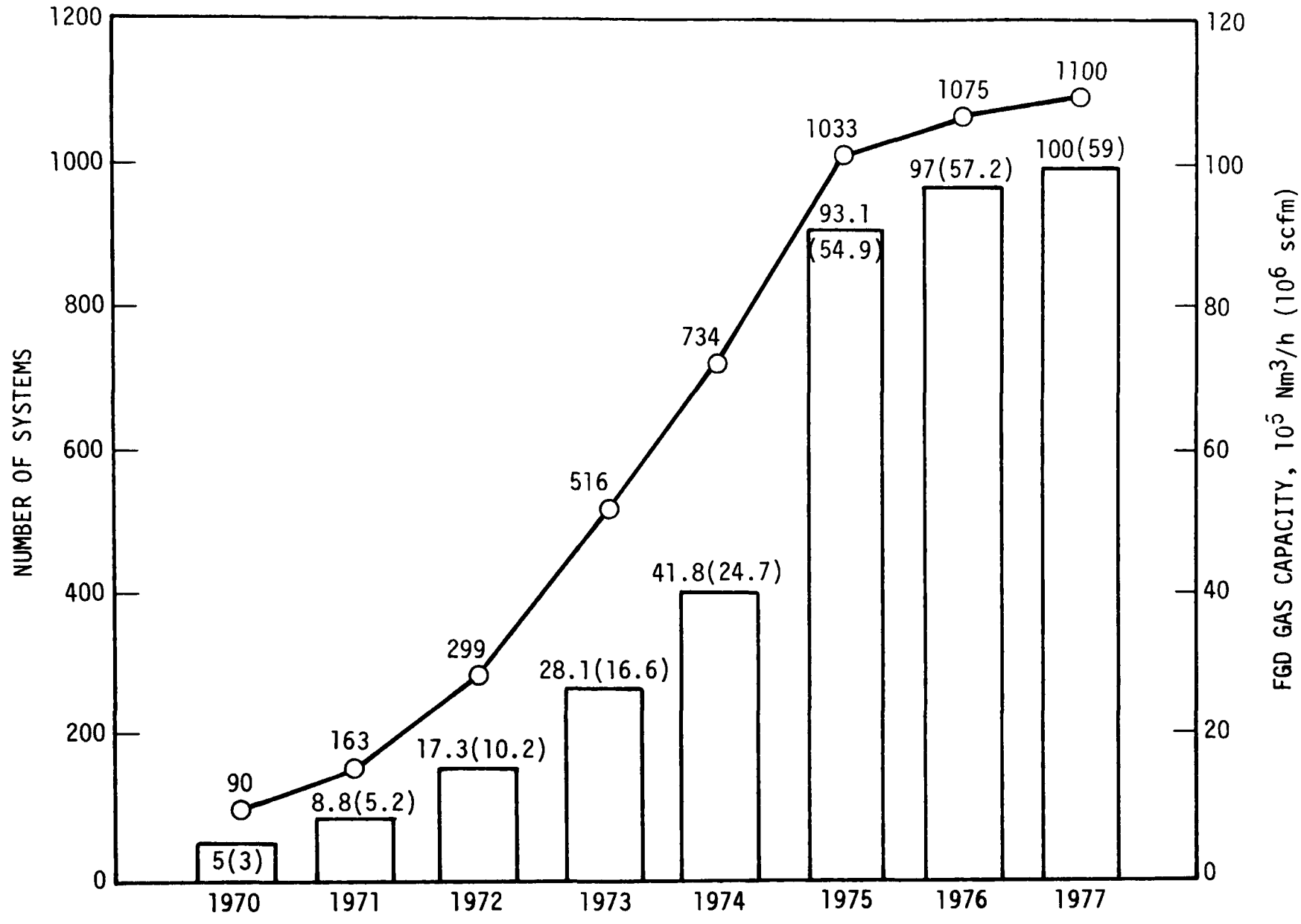

Figure 1-2. FGD systems in Japan from 1970 through 1977.

large cities and industrial districts to a level between 0.02 and 0.03 ppm, which almost achieves the annual standard of 0.016 ppm (see Figure 1-3).[29] Another cause is the recent downturn in the Japanese economy, which has restricted the building of new plants; the majority of the FGD systems were built between 1970 and 1975, when the Japanese economy was growing rapidly.[30,31] As of the beginning of 1978, desulfurized oil was in such oversupply that its cost was only $19 to $22 per kiloliter more than high-sulfur oil; thus, burning desulfurized oil was not more expensive than firing high-sulfur oil with scrubbers and avoided the problems of finding capital.[32]

The market for byproduct gypsum from FGD operations has become saturated; and throwaway operation is unattractive to Japanese utilities because of the sludge disposal problem.[33] The declining growth rate of FGD capacity may also be attributed in part to more stringent regulations governing nitrogen oxides (NO_x) emissions. Postcombustion removal of nitrogen oxides is required; and catalytic reduction with ammonia, the favored method of removal. Such systems work much better with low-sulfur oil than high-sulfur oil because sulfur trioxide poisons the catalyst.[34] Furthermore, the more stringent NO_x emission standards have spurred the development of technology for simultaneous removal of NO_x and SO_2. Instead of installing separate systems for NO_x and SO_2 control, much of Japanese industry is waiting for this new technology to be demonstrated.[35,36]

Some factors may promote FGD development and application in Japan. The Federal Government is encouraging shifts from oil to imported and domestic coal. If such shifts occur, scrubbers will probably be required, because it would be difficult to find coal with a low enough sulfur content to meet SO_2 emission standards, which in many areas require oil with a sulfur content no higher than 0.2 or 0.3 percent.[37] Also, the cost of oil is likely to increase as soon as supply and demand level out; and FGD costs are declining because of process design innovations and competition.[38] New uses (e.g., in the cement industry) for gypsum are

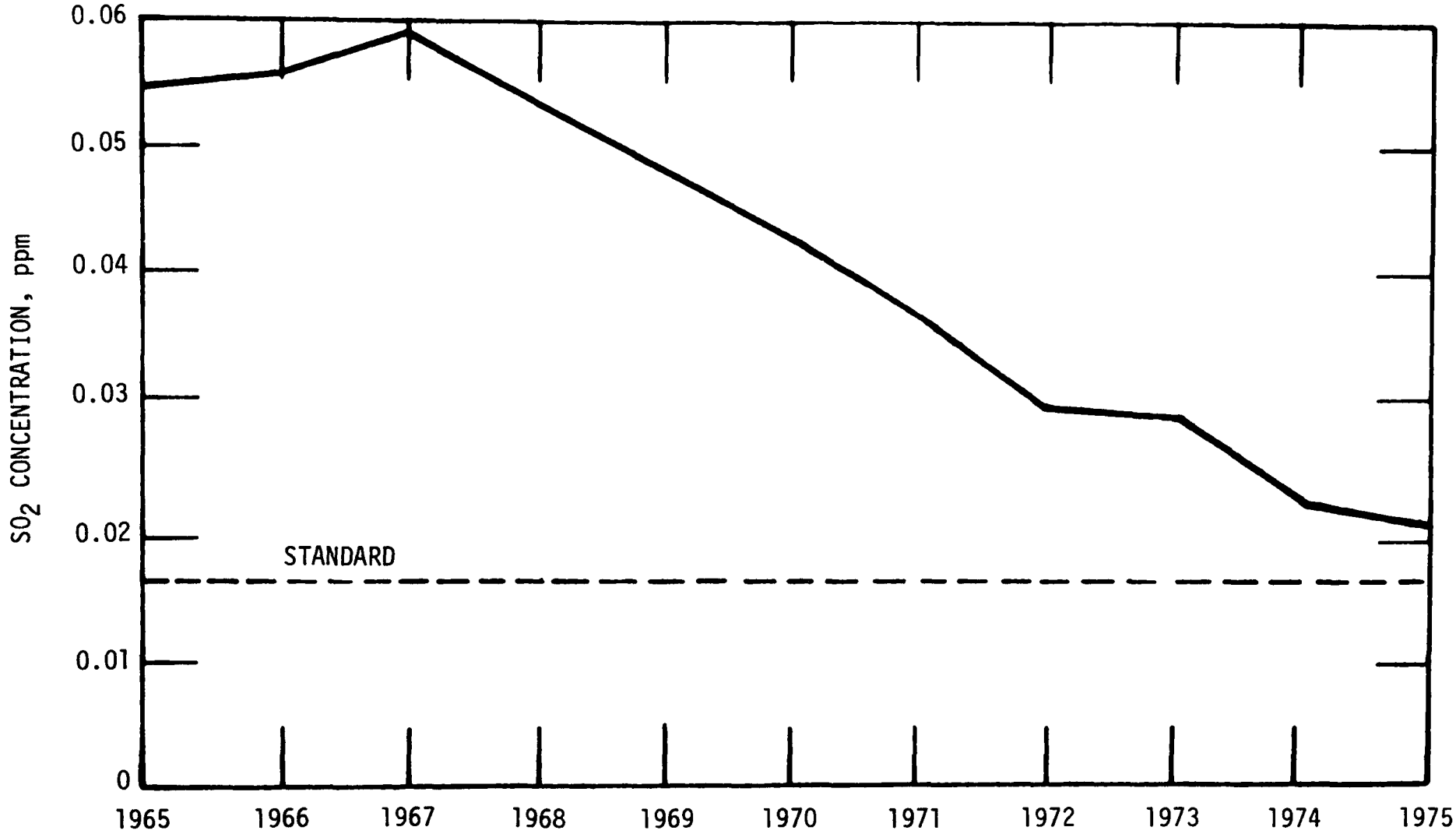

Figure 1-3. Trend in average ambient SO_2 concentration in Japan from 1965 through 1975.

being found and could encourage the growth of FGD capacity.[39] Finally, regulations are becoming so tight that in some areas the equivalent of "best available technology" and "non-deterioration" criteria are being applied. Scrubbers have the advantage that any degree of SO_2 removal can be attained.[40]

1.3 COMPARISON OF FGD TECHNOLOGY DEVELOPMENT IN THE UNITED STATES AND JAPAN

FGD systems have been used more in Japan than in the United States because of Japan's serious air pollution problems in the 1960's. These problems resulted from high concentrations of industry near major Japanese population centers.

Approximately 1000 FGD plants having a combined equivalent capacity of 28,000 MW are presently in operation in Japan. In the utility sector, approximately 66,000 MW of power generation is produced by fossil fuel combustion, 2 to 3 percent of which is provided by coal. Approximately 16 percent of the current fossil-fuel-fired electrical generation is controlled by FGD. Projections indicate that the FGD-controlled capacity will drop to approximately 14.5 percent by the end of 1981.[41,42]

The application of FGD systems in the U.S. utility sector has grown and will continue to do so. Such application of FGD systems increased from 3.5 percent of the total coal-fired power generating capacity in September 1977 to 6 percent 1 year later. Current projections* indicate that FGD capacity could be anywhere from 17 to 24 percent of the total coal-fired utility capacity by 1985.[43,44]

FGD technology is working well in Japan on both utility and industrial applications. The performance of the coal-fired units, with 90+ percent SO_2 removal efficiency and 95+ percent

---

* By 1985, coal-fired capacity is projected to total 363,200 MW; and committed FGD capacity, to reach 61,732 MW, or 17 percent of this total. If the revised NSPS require all new coal-fired utility boilers to be controlled by FGD systems after 1983, the FGD capacity by 1985 will be 87,000 MW, or 24 percent of the total.

availability, has not appreciably differed from that of oil-fired or industrial counterparts.

The success of lime/limestone scrubbing in Japan had been attributed partially to open loop operation created by purging large quantities of process liquids. The extent of blowdown, however, is variable. Often, no more water is removed from a Japanese lime/limestone system through the gypsum produced and liquid purged than from a typical closed loop U.S. system through ponding sludge.[45,46]

There are a number of differences between Japan and the United States in FGD technology development and applications. Japanese system suppliers and operators recognize that FGD systems involve chemical processes requiring carefully controlled operation by personnel specifically trained for this purpose.[47,48]

In Japan, the user expects and demands that the FGD system supplied perform with very high reliability. Such demands have caused scrubber systems to be initially more expensive than in the United States, but have reduced subsequent operating problems and maintenance costs.[49,50]

The sulfur content range of the coal burned in Japanese utility and industrial boilers is lower than that of the coal fired in many U.S. power generating systems. Japanese FGD systems have been generally used on flue gases with an SO_2 inlet concentration between 400 and 2300 ppm. Although this range occurs in many U.S. utility FGD systems, there is no experience in Japan with the high-sulfur coals burned by many U.S. utilities.[51,52]

Japan employs a stringent, continuous monitoring and enforcement program to insure that utility and industrial sources are in continuous compliance with environmental regulations.[53,54]

In some areas of Japan where the ambient concentration of SO_2 is considered to be sufficient to cause health problems, an SO_2 emission tax has been levied. Proceeds from such taxes have been used for the care of patients diagnosed as having pollution-related illnesses, such as chronic bronchitis.[55,56]

Finally, a cooperative spirit appears to exist between Japanese industry and regulatory agencies. The need for SO_2 controls was critical in the late 1960's, when Japan's FGD installation program began to accelerate. The national goal of a cleaner environment has been accepted by the utility industry, which has tried to buy the best scrubbers available and to operate them properly.[57,58]

REFERENCES FOR SECTION 1

1. In-house information gathered by PEDCo Environmental for the EPA utility FGD survey program. Contract No. 68-01-4147, Task No. 52. November 1978.

2. Personal Communication with R. RAO. Research Cottrell, Marketing projection based upon data published by the National Electric Reliability Council. April 1978. pp. 146-163.

3. Laseke, B.A., Jr., and T.W. Devitt. Status of Flue Gas Desulfurization Systems in the United States. Presented at the 71st AIChE Meeting, Miami Beach, Florida. November 14, 1978. p. 3.

4. Ibid. p.4.

5. PEDCo Environmental. Summary Report - Flue Gas Desulfurization Systems - June-July 1977. Prepared for the U.S. Environmental Protection Agency, Contract No. 68-01-4147, Cincinnati, Ohio. July 1977. p. 241, 243-244.

6. Melia, M., et al. EPA utility FGD survey August-September, 1978, Preliminary Report. Prepared for U.S. Environmental Protection Agency, Contract No. 68-02-2603, PEDCo Environmental, Cincinnati, Ohio. November 1978. pp. vii-viii.

7. Op. cit. No. 1

8. Laseke, B.A., Jr., and T.W. Devitt. Status of Flue Gas Desulfurization Systems in the United States. Presented at the Flue Gas Desulfurization Symposium, Hollywood, Florida. November 9, 1977. pp. 2-10.

9. Laseke, B.A., Jr. EPA Utility FGD Survey: December 1977-January 1978. EPA-600/7-78-051a, PEDCo Environmental, Cincinnati, Ohio. March 1978. p. 212.

10. Op. cit. No. 3. pp. 24, 27.

11. Slack, A.V., and G.A. Hollinden. Sulfur Dioxide Removal From Waste Gases, Second Edition. Noyes Data Corporation, Park Ridge, New Jersey. 1975. pp. 43, 44.

12. Kaplan, N., M.A. Maxwell, T.W. Devitt, and B.A. Laseke, Status of Flue Gas Desulfurization on Utility and Industrial Boilers in the United States and Japan. Presented at the 71st AIChE Meeting, Miami Beach, Florida. November 13, 1978. pp. 24-31.

13. Op. cit. No. 1.

14. Maxwell, M.A., H.W. Elder, and T.M. Morasky. Sulfur Oxides Control Technology in Japan. Preliminary Report Prepared for Honorable Henry M. Jackson, Chairman, Senate Committee on Energy and Natural Resources. Interagency Task Force. June 30, 1978. pp. 14, 15

15. Op. cit. No. 12. p. 34.

16. Op. cit. No. 14. p. 14.

17. Ibid.

18. Op. cit. No. 12. p. 34.

19. Op. cit. No. 14. pp. 16-19.

20. Op. cit. No. 12. pp. 36-39.

21. Op. cit. No. 14. pp. 16-19.

22. Op. cit. No. 12. pp. 36-39.

23. Op. cit. No. 14. pp. 16-19.

24. Op. cit. No. 12. pp. 36-39.

25. Op. cit. No. 14. pp. 1 -19.

26. Op. cit. No. 12. pp. 36-39.

27. Op. cit. No. 14. pp. 16-19.

28. Op. cit. No. 12. pp. 36-39.

29. Op. cit. No. 14. p. 9.

30. Ibid. p. 12.

31. Op. cit. no. 12. p. 32.

32. Slack, A.V. Technology Development for Power Plant Emission Control, Survey of Developments in Japan - May-June 1977. Prepared by SAS Corporation for PEDCo Environmental. August 15, 1977. p. 1.

33. Ibid.

34. Ibid.

35. Op. cit. No. 14. p. 12.

36. Op. cit. No. 12. p. 32.

37. Op. cit. No. 14. p. 2.

38. Ibid.

39. Ibid.

40. Ibid.

41. Op. cit. No. 14. pp. 16-19.

42. Op. cit. No. 12. pp. 36-39.

43. Op. cit. No. 3. pp. 6, 8, 9.

44. Op. cit. No. 12. pp. 16, 17, 19.

45. Op. cit. No. 14. p. 20.

46. Op. cit. No. 12. pp. 38, 39.

47. Op. cit. No. 14. p. 23.

48. Op. cit. No. 12. p. 41.

49. Op. cit. No. 14. p. 23.

50. Op. cit. No. 12. p. 41.

51. Op. cit. No. 14. p. 23.

52. Op. cit. No. 12. p. 41.

53. Op. Cit. No. 14. p. 24.

54. Op. Cit. No. 12. p. 41.

55. Op. Cit. No. 14. p. 24.

56. Op. Cit. No. 12. pp. 41, 42.

57. Op. Cit. No. 14. p. 24.

58. Op. Cit. No. 12. p. 42.

SECTION 2

OPERATIONAL FGD SYSTEMS

2.1 LIME SLURRY FGD SYSTEMS

As of September 30, 1978, there were 17 operational lime slurry FGD systems in the United States treating the flue gas from utility boilers. These systems represent a total net generating capacity of 6060 MW.[1] A list of the domestic operational lime slurry FGD installations is presented in Table 2-1 and these units are described in Appendix A.* The previously identified units, Green River 1, 2, and 3 and Bruce Mansfield 1 and 2, are updated in the following section with recently operational high performance systems added in Section 2.1.2.

2.1.1 Domestic Lime Scrubbing Units: Previously Identified Operational Systems

Since September 1977, various design modifications have been made at the previously identified operational units. These modifications, as well as updated performance information, are presented in the following two sections.

2.1.1.1 Green River 1, 2, and 3--

Since startup of the FGD system at the Green River Power Station in September 1975, certain operational problems have necessitated design modifications. With the exception of outage time caused by severe winter weather from November 1977 through March 1978, system operability has been greater than 95 percent since completion of the modifications.[3,4]

Modifications--As previously mentioned, one of the most severe problems encountered with the FGD system was the frequent

---

* The Shawnee Station of Tennessee Valley Authority is not included in Table 2-1 because of its experimental use of both lime and limestone.

TABLE 2-1. MAJOR DOMESTIC OPERATIONAL LIME SLURRY FGD SYSTEMS

Company	Station/Unit	Size,[a] MW	Initial startup date	New or retrofit	Coal sulfur content, %	Design sulfur dioxide removal efficiency, %	Actual sulfur dioxide removal efficiency, %
Columbus and Southern Ohio Electric	Conesville 5	400	1-77	New	4.7	89.5	
Columbus and Southern Ohio Electric	Conesville 6	400	6-78	New	4.7	89.5	
Duquesne Light	Elrama 1 thru 4	510	10-75	Retrofit	2.0	83	
Duquesne Light	Phillips 1 thru 6	410	7-73	Retrofit	2.0	83	
Kansas City Power and Light	Hawthorne 3	100	11-72	Retrofit	2.0	70	
Kansas City Power and Light	Hawthorne 4	100	8-72	Retrofit	2.0	70	
Kentucky Utilities	Green River 1,2, and 3	64	9-75	Retrofit	3.7	80	80 - 90
Louisville Gas and Electric	Cane Run 4	178	8-76	Retrofit	3.75	85[b]	86 - 89
Louisville Gas and Electric	Cane Run 5	183	12-77	Retrofit	3.75	85[b]	
Louisville Gas and Electric	Mill Creek 3	425	8-78	New	3.75	85[b]	
Louisville Gas and Electric	Paddy's Run 6	65	4-73	Retrofit	3.75	80[b]	80 - 99
Minnkota Power Cooperative	Milton R. Young 2	450	9-77	New	0.7	75[c]	
Montana Power	Colstrip 1	360	11-75	New	0.8	60[c]	75
Montana Power	Colstrip 2	360	8-76	New	0.8	60[c]	75
Pennslyvania Power	Bruce Mansfield 1	825	4-76	New	4.7	92.1	95.0
Pennsylvania Power	Bruce Mansfield 2	825	7-77	New	4.7	92.1	95.0
Utah Power and Light	Huntington 1	405	5-78	New	0.5	80	

[a] Net with FGD

[b] Carbide lime

[c] Lime/alkaline fly ash

high loading of acid mist in the scrubber exit gas stream. Such loading caused acid condensation and rainout in the stack and immediate plant area. Along with the necessary stack repairs, replacement of the radial vane mist eliminator with a chevron type was completed. The reheat system has also been installed by American Air Filter. This system utilizes extraction steam from an adjacent unit (No. 5) to heat ambient air. This air is then injected into the scrubbed gases before they exit through the scrubber stack. A temperature boost of approximately 28°C (50°F) is provided.

Other minor modifications have been made to solve various problems encountered. The smaller balls in the mobile bed contactor were replaced with larger balls to reduce ball migration, the rubber-lined pump impellers were replaced with Ni-hard impellers, and the lime slaker's degritter was redesigned to reduce grit pick up.

Figure 2-1 presents a simplified process flow diagram of the Green River facility.[5,6]

Performance--A plant strike at the Green River Power Station from July 1977 through early November 1977 prevented boiler and scrubber operations for that period (100 percent FGD availability). After a return to service, severe winter weather caused numerous freezeups and outage time. System availability was 86 percent in November 1977, but dropped to 23 percent in January 1978. The FGD system was shut down during February and March because emergency conditions made it necessary for utility personnel to concentrate their efforts on power generation rather than FGD system repair. The boiler, however, logged a total of 1341 hours during the two month period. After being returned to service, the FGD system showed increasing availability from 41 percent in April to 73 percent in June, with a system operability of 95 percent or greater through September. Minor problems were encountered when the screens on the suction side of the pumps that pump slurry from the preparation area to the nozzles began plugging because

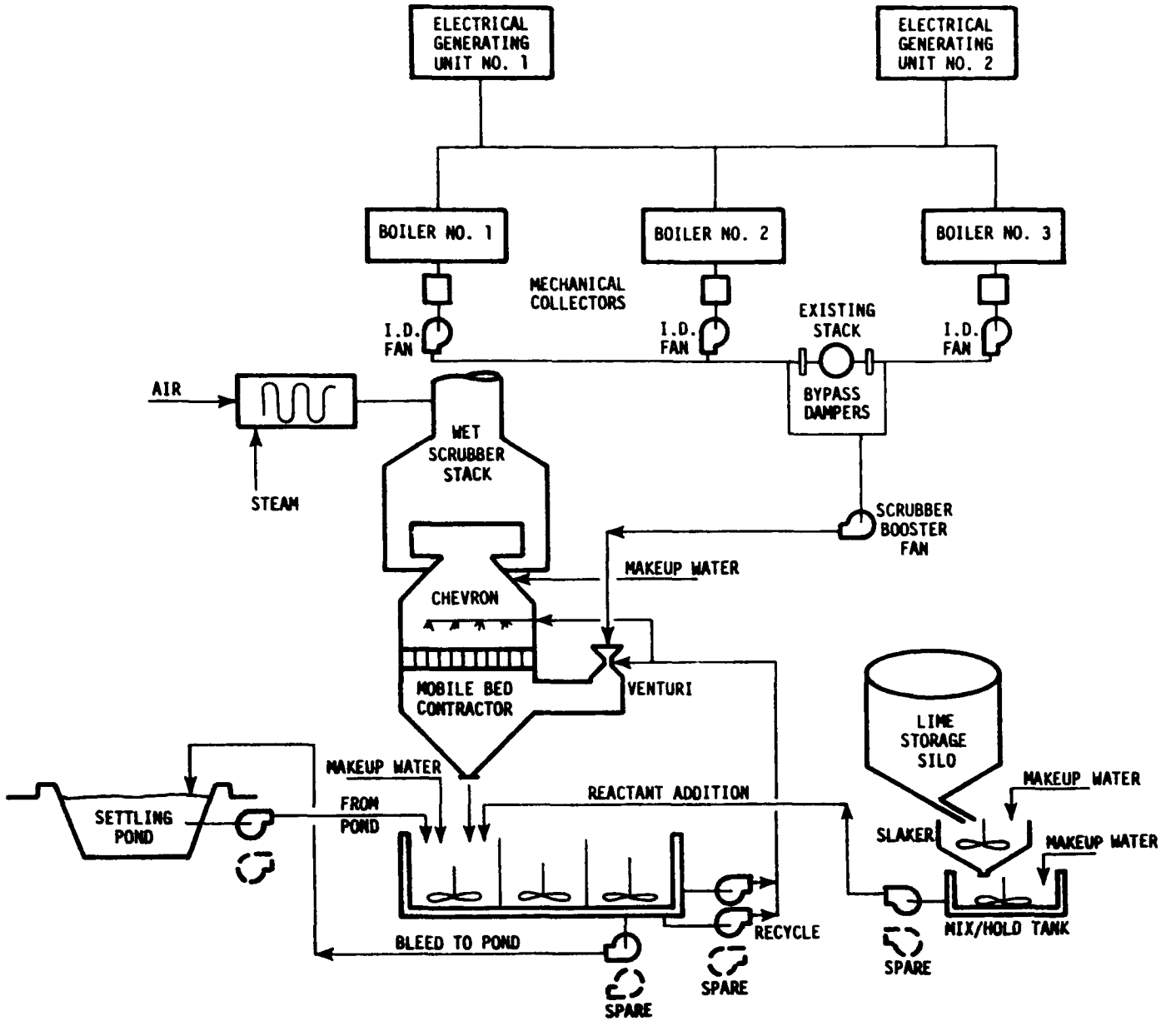

Figure 2-1. Process flow diagram for Green River 1, 2, and 3.

of large grit. Routine maintenance was performed on the system from July through the middle of August. Recurring plugging problems in September made it necessary for the FGD system to be operated at one third of total capacity. Index values for average system availability, operability, reliability, and utilization for 1977 and 1978 (through September) are presented in Table 2-2. Table 2-3 presents these index values and averages for the period September 1977 to September 1978. System operability is plotted from July 1977 to September 1978 (Figure 2-2).[7,8]

Removal efficiency--During the period October 17-19, 1978, PEDCo Environmental, Inc., conducted a series of flue gas tests at the Green River Plant of Kentucky Utilities. The test program was conducted to determine scrubber efficiency and compliance with the State of Kentucky's air pollution regulations for particulate matter and sulfur dioxide emissions. The sulfur dioxide tests were run simultaneously at the inlet and outlet to the scrubber.

In addition to emission data, flue gas volume, temperature, moisture, carbon dioxide, and oxygen content were also measured. Coal samples were also taken by plant personnel for proximate and ultimate analysis. All the tests were run under normal boiler operating conditions as determined by plant personnel.

A summary of the sulfur dioxide emissions is presented in Table 2-4.

Sulfur dioxide emissions at the outlet ranged from 482 to 641 ng/J (1.12 to 1.49 lb/10^6 Btu) and averaged 555 ng/J (1.29 lb/10^6 Btu); average concentration was 488 parts per million (ppm). This resulted in an average sulfur dioxide removal efficiency of 83.3 percent for the test period. The outlet flow rate averaged 95 m^3/s (200,754 dry scfm) at an average temperature of 154°C (310°F). Moisture content averaged 13 percent with an average composition of 11.3 percent carbon dioxide and 8.2 percent oxygen.[9]

TABLE 2-2. GREEN RIVER POWER STATION, OPERATIONAL DATA FOR 1977 THROUGH SEPTEMBER 1978

		Parameters								
		A	B	C	D	E	B/A	D/C	D/E	D/A
Year	Month	Hours in period	Hours FGD system available	Hours FGD called upon	Hours FGD system operated	Hours boilers operated	Avail-ability, %	Reli-ability, %	Oper-ability, %	Util za-tion, %
1977	January	744	698	744	698	744	94	94	94	94
	February	672	243	266	243	266	36	91	91	36
	March	744	0	0	0	0	0	0	0	0
	April	720	288	167	164	167	40	98	98	23
	May	744	736	527	513	527	99	97	98	69
	June	720	720	34	34	34	100	100	100	5
	July	744	744	0	0	0	100	0	0	0
	August	744	744	0	0	0	100	0	0	0
	September	720	720	0	0	0	100	0	0	0
	October	744	744	0	0	0	100	0	0	0
	November	720	634	332	301	332	88	91	91	42
	December	744	375	596	375	596	50	63	63	50
	Total	8760	6646	2666	2328	2666	76	87	87	27
1978	January	744	722	537	170	537	97[a]	32	32	23
	February	672	672	0	0	672	100[a]	0	0	0
	March	744	744	0	0	669	100[a]	0	0	0
	April	720	296	295	296	295	41	100	100	41
	May	744	474	473	474	474	64	100	100	64
	June	720	524	524	524	525	73	100	100	73
	July	744	99	99	99	103	13	100	96	13
	August	744	454	207	205	207	61	99	99	28
	September	720	546	298	298	303	76	100	98	41
	Total	6552	4531	2433	2066	3785	69	85	55	32

[a] Because of emergency conditions, the utility chose to concentrate their maintenance crews on power generation rather than FGD operation. Under normal conditions the relatively minor FGD system problems could have been solved more quickly, and the system could have been considered available throughout most of this period.

TABLE 2-3. GREEN RIVER POWER STATION, OPERATIONAL DATA FOR SEPTEMBER 1977 TO SEPTEMBER 1978

		Parameters								
		A	B	C	D	E	B/A	D/C	D/E	D/A
Year	Month	Hours in period	Hours FGD system available	Hours FGD called upon	Hours FGD system operated	Hours boilers operated	Avail-ability, %	Reli-ability, %	Oper-ability, %	Utiliza-tion, %
1977	September	720	720	0	0	0	100	0	0	0
	October	744	744	0	0	0	100	0	0	0
	November	720	634	332	301	332	88	91	91	42
	December	744	375	596	375	596	50	63	63	50
1978	January	744	722	537	170	537	97[a]	32	32	23
	February	672	672	0	0	672	100[a]	0	0	0
	March	744	744	0	0	669	100[a]	0	0	0
	April	720	296	295	296	295	41	100	100	41
	May	744	474	473	474	474	64	100	100	64
	June	720	524	524	524	525	73	100	100	73
	July	744	99	99	99	103	13	100	96	13
	August	744	454	207	205	207	61	99	99	28
	September	720	546	298	298	303	76	100	98	41
Total		9480	7004	3261	2742	4713	74	84	58	29

[a] Because of emergency conditions, the utility chose to concentrate their maintenance crews on power generation rather than FGD operation. Under normal conditions, the relatively minor FGD system problems would have been solved more quickly, and the system could have been considered available throughout most of this period.

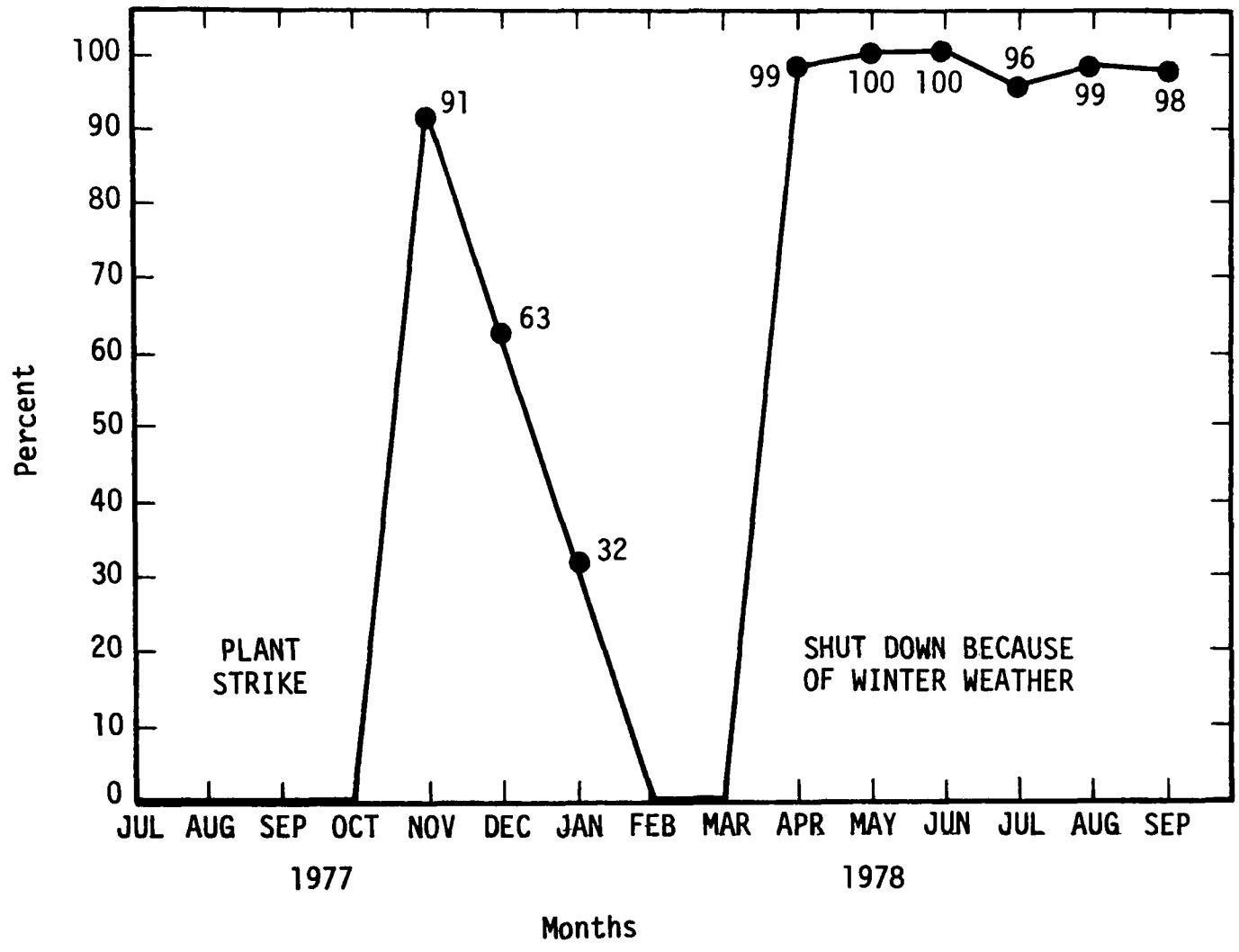

Figure 2-2. Scrubber system operability - Green River 1, 2, and 3.

TABLE 2-4. SUMMARY OF SULFUR DIOXIDE EMISSION RATES

Test No.	Date 1978	Emission rates (outlet)			Emission rates (inlet)			Removal efficiency, %
		Concentration, ppm[a]	kg/s (lb/h)	ng/J (lb/10^6 Btu)	Concentration, ppm[a]	kg/s (lb/h)	ng/J (lb/10^6 Btu)	
1	10/19	424	0.10 (839)	482 (1.12)	2611	0.72 (5701)	2915 (6.78)	86.1
2	10/19	449	0.11 (888)	507 (1.18)	2464	0.68 (5379)	2794 (6.50)	83.8
3	10/19	557	0.14 (1101)	632 (1.47)	2556	0.70 (5581)	2876 (6.69)	80.0
4	10/19	533	0.13 (1055)	598 (1.39)	2628	0.72 (5738)	2958 (6.88)	81.9
5	10/19	504	0.12 (996)	572 (1.33)	2587	0.71 (5648)	2936 (6.83)	83.1
6	10/19	463	0.12 (917)	529 (1.23)	2759	0.76 (6024)	3130 (7.28)	84.2
Average		488	0.12 (966)	555 (1.29)	2600	0.72 (5678)	2936 (6.83)	83.3

[a] Parts per million by volume.

2.1.1.2 Bruce Mansfield 1 and 2--

On October 1, 1977, Bruce Mansfield 2 began commercial operation and brought the current net generating capacity of the Bruce Mansfield Power Station to 1650 MW (1834 MW gross). This unit is similar in design to Bruce Mansfield 1, which includes a Chemico wet lime scrubbing system.

The system consists of six parallel, two-stage, scrubbing trains. Each train includes a variable-throat venturi scrubber, a wet induced-draft fan, and a fixed-throat venturi absorber. The scrubbing trains are arranged in two groups of three. Flue gas from the three trains in each group flows together into an oil-fired reheat chamber and then is discharged to the atmosphere through a 290-m (950-ft) stack. The stack, which serves both operating units, contains four carbon steel flues for receipt of the discharge gases from the four oil-fired reheat chambers.

The lime used in the scrubbing operations is a proprietary reagent, known as Thiosorbic lime, supplied by the Dravo Corporation. This lime, which contains 2 to 6 percent magnesium oxide, offers the advantage of increased sulfur dioxide removal efficiency and allows a subsaturated mode of operation.

The flue gas cleaning wastes produced by the scrubbing systems are treated and disposed of in an environmentally acceptable manner in a waste disposal system designed and built by the Dravo Corporation. The waste disposal system consists of a pumping and treatment facility, a transportation facility, and a containment area. In the pumping and treatment facility, a cementitious stabilizing agent, Calcilox, is added to the scrubber thickener underflow. This mixture is then pumped by pipeline to a disposal area approximately 11 km (7 mi) west of the power plant. The disposal area is a ravine with an earthen dam that creates a reservoir into which the waste slurry is pumped and deposited on the valley floor under a covering of water.

Additional data for Bruce Mansfield 1 and 2 are presented in Table 2-5. Figure 2-3 represents a schematic of the process lines and major components of the FGD systems.[10]

TABLE 2-5. FGD SYSTEMS DATA FOR BRUCE MANSFIELD 1 AND 2 SHIPPINGPORT, PENNSYLVANIA

Unit rating (gross), MW (net), MW	1834 1650
Fuel	Coal
Average fuel characteristics: Heating value, kJ/kg (Btu/lb) Ash, % Moisture, % Sulfur, % Chloride, %	 27,593 (11,863) 15.11 5.53 2.44
FGD process	Lime
FGD system supplier	Chemico
Application	New
Status	Operational
Startup date: Initial Commercial	 December 1975 (Unit 1) June 1976 (Unit 1); October 1977 (Unit 2)
Design removal efficiency: Particulate, % Sulfur dioxide, %	 99.8 92.1
Actual removal efficiency: Particulate, % Sulfur dioxide, %	 99.9 95.0
Water loop[a]	Open
Total water makeup, liters/s per net MW (gal/min per net MW)	
Sludge disposal	Stabilized sludge disposed in an offsite dammed reservoir

[a]For the purposes of this report, closed water loop is defined as the amount of makeup water entering the system equalling the water exiting the system in the settled sludge and humidified flue gas.

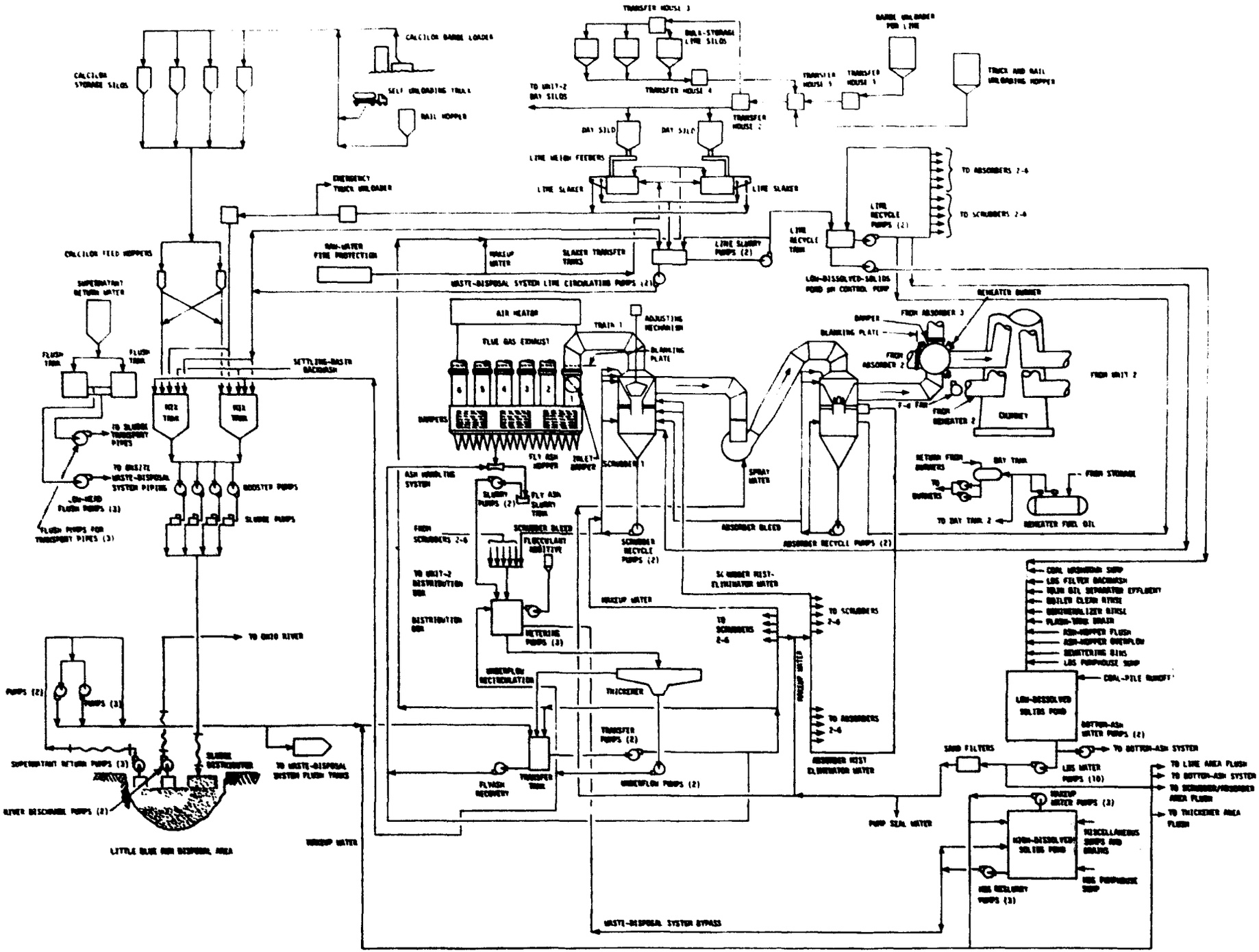

Figure 2-3. Schematic of the process lines and major components of the Bruce Mansfield air quality and waste disposal system.

Problems and solutions--Startup and subsequent operation of the Bruce Mansfield scrubbing and waste disposal systems have been accompanied by several design, mechanical, and chemical problems, especially in the scrubbing systems and related equipment. The utility, in conjunction with the system supplier, has conceived and implemented solutions to many of these problems. Some of the problems and resulting modifications were identified in the previous report.

The scrubbing systems were originally designed so that five of the six scrubbing trains installed on each unit could handle total boiler gas flow at a slightly reduced particulate and sulfur dioxide collection efficiency. Actual operation has shown, however, that all six scrubbing trains are necessary when the unit is operating at full load. This has eliminated the option of servicing one train over a short period of time without load cutbacks.

The reheaters have never worked properly. At maximum operating conditions, a resonance pattern created by the oil burners produced severe duct vibration. The shock wave created by the oil injection nozzle matched the reasonance frequency of the ducts. This vibration was so severe that, if permitted to continue, it would have cracked the ducts and shaken them loose. The oil injection nozzles were modified by the manufacturer to eliminate this shock wave. Although this modification was successful, the reheaters still cannot fire at a rate that provides the design temperature increase of 22°C (40°F).

Mist eliminator performance has been a major problem area in system operation. Although the problems encountered have resulted from complex chemical, mechanical, and design factors, the major contribution has come from design factors. Mist eliminator scaling was encountered very early and prompted modification to the mist eliminator wash system. Moreover, tests conducted in late 1976 indicated that mist carryover from the mist eliminators was approximately 7 g/m^3 (3 gr/scf), which is three times higher

than the maximum design value. Pennsylvania Power and Chemico experimented with second-stage vertical mist eliminators. Duct diameter and spatial restrictions caused these mist eliminators to experience high flow velocities, on the order of 15 m/s (50 ft/s). One experimental vertical mist eliminator was installed and collapsed because of structural failure. Another vertical configuration was developed that would operate at lower gas velocities. Concurrent with this research, model studies performed by Chemico indicated that excessive carryover resulted when pressure drops exceeding 0.2 kPa (0.75 in. H_2O) developed across horizontal mist eliminators. No carryover was evident when pressure drops were maintained at 0.1 kPa (0.5 in. H_2O) or less. A new wash system was devised and is activated when the pressure drop across the mist eliminator exceeds 0.07 kPa (0.3 in. H_2O). Where the problem is not corrected and the pressure drop continues to rise, the module is taken out of service; and the mist eliminator is manually cleaned.

Failure of stack liners is also considered a design problem. Failure of the original liner material applied to the carbon steel (Cor-Ten) flues has resulted in half-load operation for 1 year on both units. Originally, the two flues on Unit 1 were lined with a flaked glass lining. The first 61-m (200-ft) section of each flue was lined with a troweled-on flaked glass material approximately 0.15 cm (60 mils thick). The remaining 213-m (700-ft) section was lined with a sprayed-on flaked glass material approximately 0.05 cm (20 mils) thick. The bubbles, widespread failure, and resulting corrosion were most severe in the top section. For want of other viable alternatives, the utility replaced the sprayed-on liner with the troweled-on material. Several test patches were also inserted in one of the flues of Unit 2. Another inspection of the flues in the spring of 1978 revealed that one of the flues for Unit 2 had developed a crack approximately three-quarters of the way around because of liner failure and acid corrosion attack. This crack had extended to 90 percent of the circumference by the time the utility re-

paired it by applying metal cladding to the failed area. The utility contracted Carnegie Mellon Institute to investigate this problem thoroughly. Their findings and the results of the test patch program indicate that a completely suitable liner material does not exist. Of all the material evaluated, CXL-2000, developed by Pullman Kellogg, holds the most promise for long-term service. The utility has used this material for relining three of the four flues to date. In addition, they plan to reline the remaining flue with this material when necessity dictates. Because of this material's ability to withstand a wet corrosive environment, the reheaters have been shut down permanently.

Another design problem concerns the operation of the wet induced-draft fans. Although these fans have been beset by a number of problems that are a combination of chemical, mechanical, and design related factors, the major problem encountered has been failure of the construction materials. The pH at this location has been measured at approximately 2.0. The fan casings (constructed of rubber-lined carbon steel), the scrolls (constructed of carbon steel), and the hubs (constructed of carbon steel) have been damaged extensively by corrosion and erosion. The utility is now replacing many of these with components constructed of more sophisticated alloys such as Carpenter 20 or Inconel 625.

Many of the chemical problems that beset the scrubbing system and related equipment were caused by a faulty pH monitoring network during the early phases of operation. Primary difficulties involved flow sampling location and glass probe breakage, which caused pH to be controlled manually during much of the initial operation stage. This manual control in turn caused subsequent problems such as scale formation, plugging, and acid corrosion. The pH monitors were relocated to a different position in the recirculation circuit, and sampling procedures were modified. The results have been excellent. The pH is controlled within the very narrow band from 6.8 to 7.2. Magnesium ion

concentration is maintained at a minimum level of 1500 ppm in the liquid circuit. Sulfur dioxide removal efficiency levels are consistently above the 92.1 percent design value. Finally, the modules are operating without any substantial development of hard scale (gypsum) or plugging, which often affected mist eliminator performance.

Although the system has been plagued by a number of minor problems such as pump and valve failures, they have caused very little outage time.

Waste disposal system--Generally, the operation of the waste disposal system has proceeded without major incident. Some problems, however, have been encountered.

The system has never operated in a closed water loop mode. Supernatant from the reservoir is being discharged into the Ohio River. One major reason is the great requirement of fresh makeup water in scrubbing operations (e.g., in the mist eliminator wash). Another is the quality of the supernatant resulting from the stabilization process. The pH of the supernatant ranges from 11.0 to 11.5; the design pH, however, is 8.0. There has thus been a decreasing emphasis on using the supernatant return for slurrying and washing. One cause of the high pH is the use of more stabilizer (Calcilox) than was anticipated when the system was designed.

Core samplings of the stabilized waste material covering the reservoir floor indicate different strata of material with varying physical characteristics. Such strata resulted from not varying the Calcilox feed rate with varying thickener underflow characteristics, especially during the initial operation, when stabilizer was added manually. This situation could prevent the use of the reservoir as a site for future building construction.

The reservoir is now being filled faster than the design rate, based on the station's current capacity factor. If this trend continues, the site may not have ample capacity for three units with a 35-year service life.[11]

Performance--In September 1977, Bruce Mansfield 1 was taken down for six days in order to install rigging in the 1B chimney flue in preparation for flue liner repairs. As a result of these repairs, only three of the scrubber trains were returned to service when the unit was brought back on line. The repairs continued through March 1978, at which time the three modules were returned to service. Miscellaneous problems encountered through June 1978 included leaks in fan housings and ducts that required repair. FGD system dependability factors for Bruce Mansfield 1 are summarized in Table 2-6.

The Bruce Mansfield 2 FGD system was declared available for commercial operation on October 1, 1977. Total system availability during the first month of operation was 80 percent, although premature failure of several test patches in the 2B flue stack lining necessitated repairs shortly after startup. Availability reached a high of 97 percent in January 1978, despite freezing that occurred in the process piping caused by severe winter weather. The weather also caused problems with the induced-draft fan coolers during February. Major repair of the 2B stack flue lining began in early April 1978 and lasted through June 1978; the repair work reduced system availability.

FGD system performance information for Bruce Mansfield 2 is listed in Table 2-7. System availability for both Bruce Mansfield 1 and 2 is depicted graphically in Figures 2-4 and 2-5.[12,13]

Removal efficiency--Chapter 123.11 of the Pennsylvania regulations governing the Bruce Mansfield units limits particulate emissions to 0.019 g/m^3 (0.0175 gr/scf), and sulfur dioxide emissions to 258 ng/J (0.6 $lb/10^6$ Btu) of heat input to the boiler. Actual particulate emissions, as measured by the utility, are 13 ng/J (0.03 $lb/10^6$ Btu), below the standard. At Bruce Mansfield 1, continuous monitoring data indicated sulfur dioxide removal efficiencies ranging from 60 to 94 percent as a result of pH control problems. Since better control of scrubbing pH has been attained, sulfur dioxide removal efficiency has consistently improved.

TABLE 2-6. PERFORMANCE DATA ON BRUCE MANSFIELD 1 FGD SYSTEM, PENNSYLVANIA POWER

		Boiler hours	Availability, %	Operability, %	Utilization, %
1977	September	558	66	75	58
	October	720	46	48	46
	November	720	48	48	48
	December	626	49	49	44
1978	January	331	33	33	19
	February	514	37	47	37
	March	689	66	72	66
	April	720	82	82	82
	May	457	78	75	46
	June	0	67	0	0

TABLE 2-7. PERFORMANCE DATA ON BRUCE MANSFIELD 2 FGD SYSTEM, PENNSYLVANIA POWER

		Boiler hours	Availability, %	Operability, %	Utilization, %
1977	October	595	80	78	66
	November	581	72	74	60
	December	607	93	92	77
1978	January	391	97	85	53
	February	672	89	75	75
	March	494	82	83	56
	April	713	50	44	44
	May	270	50	50	18
	June	417	34	50	34

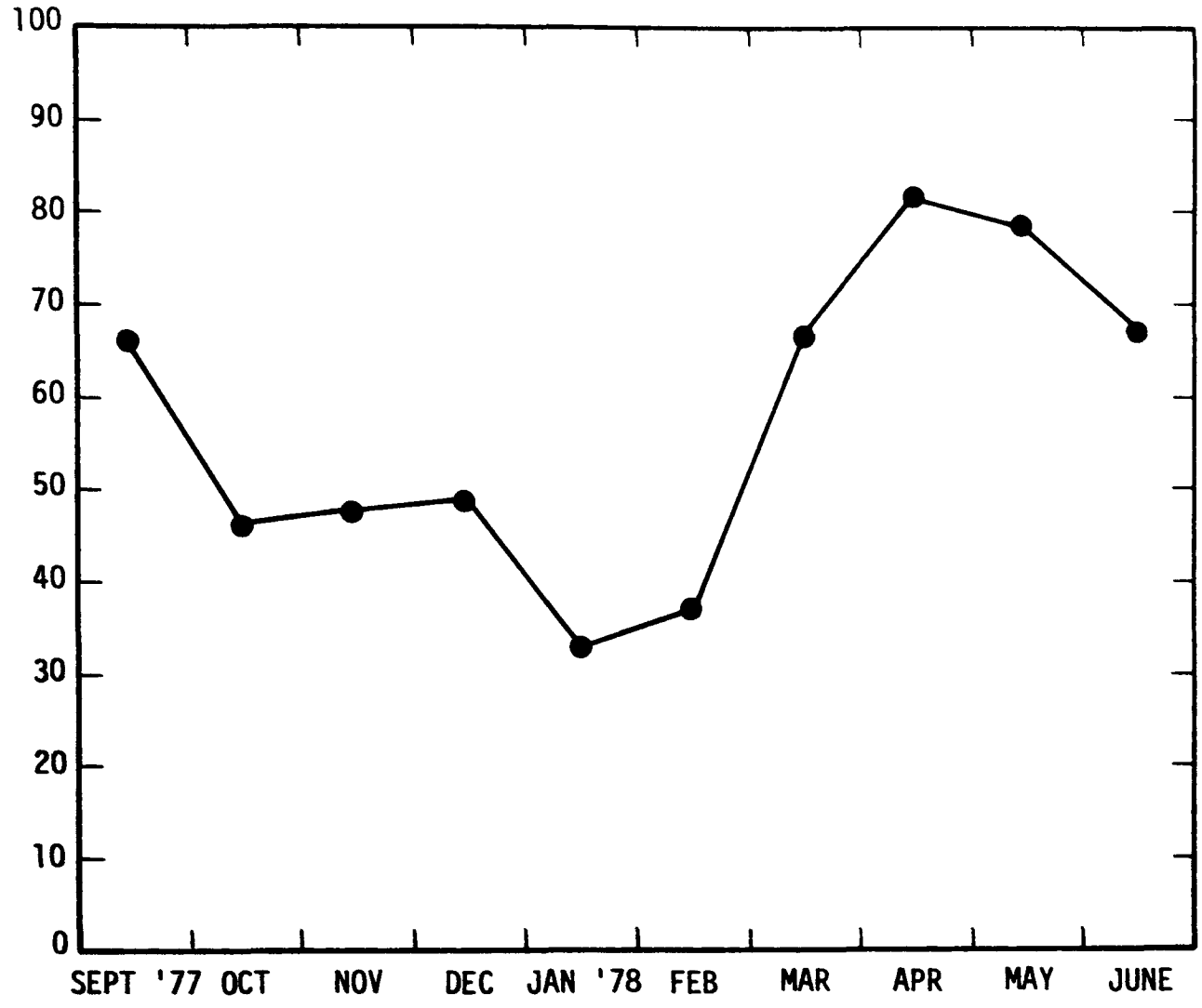

Figure 2-4. FGD system availability[a], Pennsylvania Power, Bruce Mansfield 1.

[a]The availability index reflects the hours the FGD system is available for operation (whether operated or not) divided by the total hours in the period.

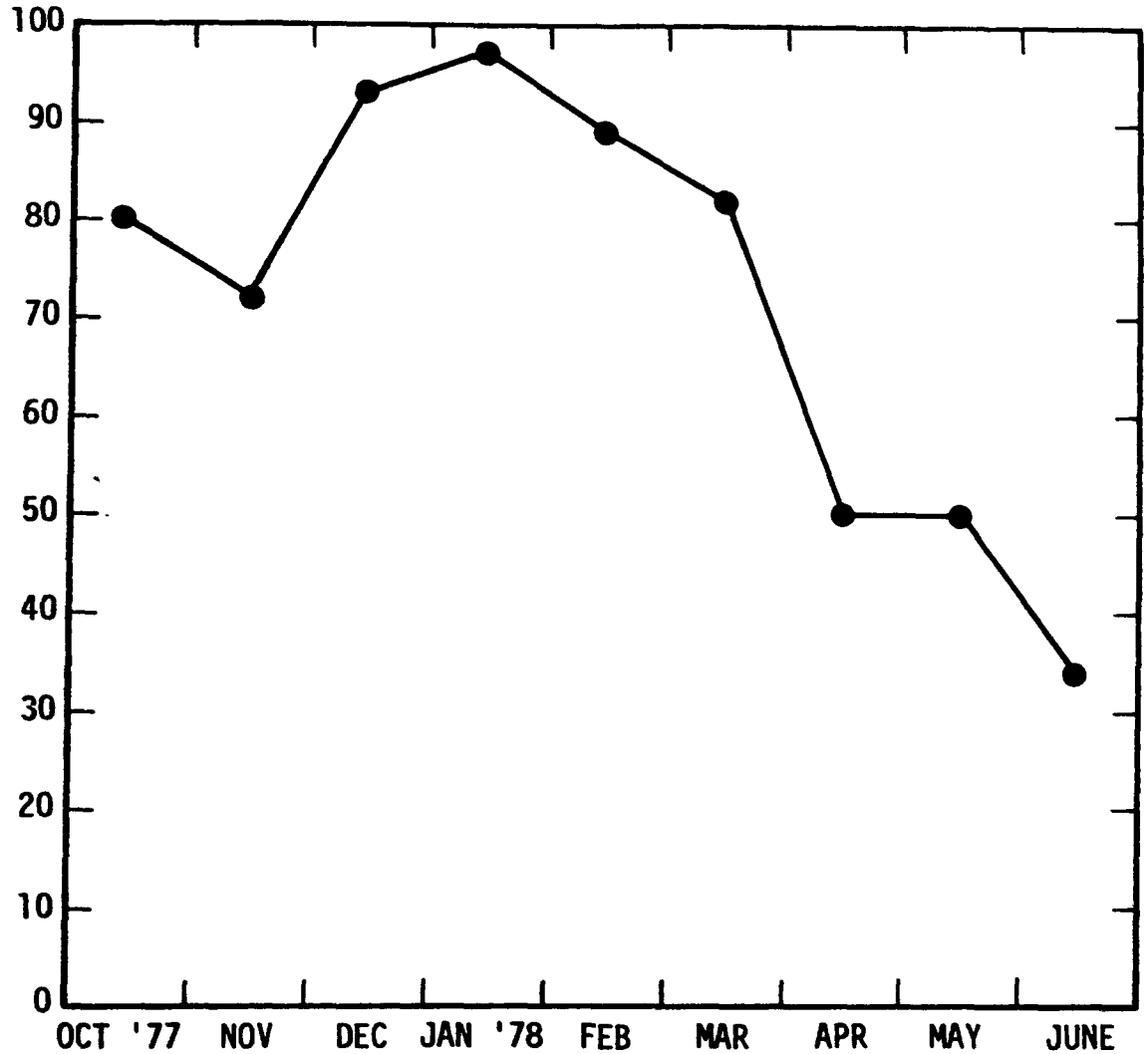

Figure 2-5. FGD system availability[a], Pennsylvania Power, Bruce Mansfield 2.

[a]The availability index reflects the hours the FGD system is available for operation (whether operated or not) divided by the total hours in the period.

Sulfur dioxide emission rate tests were conducted on Units 1 and 2 by the Pennsylvania Department of Energy Resources and by an independent testing firm hired by Pennsylvania Power. Results indicated sulfur dioxide emissions as low as 64 ng/J (0.15 lb/10^6 Btu).

In May 1977, a program conducted by the U.S. Environmental Protection Agency involved gathering continuous monitoring data for sulfur dioxide emission rates at Bruce Mansfield 1. Partial monitoring began in late August 1977, with the first complete data beginning in mid-September. One of the chimney flues was undergoing liner repairs during the test period, causing the unit to be operated at half load with only three scrubber modules available. The sulfur dioxide removal statistics for a 24-hour averaging period indicated that when pH control was a severe problem, the mean removal efficiency was 81.4 percent, with a standard deviation of 1.057 (20 test points were used). A second mean sulfur dioxide removal efficiency obtained from 11 data points gathered during improved pH control was 85.3 percent, with a standard deviation of 1.029.[14,15]

2.1.2 Domestic Lime Scrubbing Units: Recently Operational Systems

2.1.2.1 Conesville 5 and 6--

The Conesville Power Station of Columbus and Southern Ohio Electric is located on the Muskingum River in Conesville, Ohio. The plant has a current capacity of 2055 MW (gross). Conesville 1, 2, and 3 have a combined capacity of 433 MW (gross) and share a common stack. Conesville 4 is rated at 800 MW (gross), and Conesville 5 and 6 are each rated 411 MW (gross). Conesville 4, 5, and 6 each have a separate stack.

The Conesville 5 and 6 steam generators are dry-bottom, pulverized-coal-fired boilers that were supplied by Combustion Engineering. A mixture of high-sulfur Ohio coals is burned in each. The sulfur content ranges from 4.2 to 5.1 percent; the ash content, from 12 to 19 percent; and the heating value, from 24,000

to 26,000 kJ/kg (10,300 to 11,200 Btu/lb). Forty percent of the coal is delivered by a conveyor from a coal mine complex 11 km (7 mi) from the plant site. The remainder is trucked in from southeast Ohio.

Each unit develops a flue gas flow of 658 m^3/min (1,393,893 acfm) at a temperature of 147°C (296°F). The stack for each is acid-brick-lined and is 244 m (800 ft) tall.[16,17]

Pollution control--The air pollution control systems at Conesville 5 and 6 each consist of a Research Cottrell cold-side ESP, followed by two Universal Oil Products (UOP) sulfur dioxide absorber modules in parallel. Each ESP is disigned for 99.65 percent particulate removal efficiency; and each Turbulent Contact Absorber (TCA) system, for 89.6 percent sulfur dioxide removal efficiency. Each system is designed for an outlet sulfur dioxide loading of 430 ng/J (1.0 lb/10^6 Btu of heat input). Boiler induced-draft (ID) fans are located immediately downstream of the ESP's.

Following the ID fans, the flue gas enters the two parallel TCA scrubbing trains. Each absorber is capable of handling 60 percent of the flue gas flow. A presaturator section lowers the flue gas temperature from 141°C (286°F) to 107°C (125°F) and provides some initial sulfur dioxide removal. The gas then enters the neoprene-lined, carbon steel absorber modules. At Conesville 5, one stage of 3.8-cm (1.5-in.) plastic balls provides a contacting surface between the lime slurry and the flue gas. At Conesville 6, two stages of plastic balls provide the contacting surfaces in each absorber module. Following each module, the flue gas passes through a fiberglass entrainment separator and two horizontal banks of chevron-type mist eliminators. The bottoms of the trap-out trays are washed intermittently, and the lower mist eliminators are washed continually with recycled pond water. The flue gas from the parallel absorber trains then enters the 244-m (800-ft), Ceilcote-lined stack. Following each boiler ID fan is a bypass breeching around the entire scrubber

loop. Each module can be bypassed independently. No stack gas reheat is currently employed at either unit.

Dravo Thiosorbic lime from Maysville, Kentucky, is utilized in the UOP scrubber modules at a stoichiometric ratio of 1.1. The calcined, pelletized lime has a nominal particle diameter of 4.45 cm (1.75 in.), a magnesium oxide (MgO) content from 3 to 8 percent, and a calcium oxide (CaO) content from 90 to 95 percent. The lime slaker discharges the 20 percent solids slurry into an agitated lime slurry sump, where it is retained for 5 minutes before being transferred to the lime slurry storage tank, which handles the surge requirements of the absorption system. The transfer of slurry from the storage tank to the TCA recycle tanks is accomplished by variable-speed pumps that respond to changing sulfur dioxide concentrations and boiler load conditions via a pH monitor. The scrubbing liquor contains from 7 to 12 percent solids and is recirculated by four pumps (one standby) per unit. Each pump is rated at 757 liters/s (12,000 gal/min). Scrubber outlet pH is 5.8, and pH in the recycle tank is approximately 6.8.

A bleed stream of spent reaction products is continuously withdrawn from the recycle tanks and pumped to the thickener system. The thickener is 30 m (100 ft) in diameter and 4 m (14 ft) deep in the center. Here the reaction product slurry is concentrated to an underflow composition of approximately 40 percent solids. This underflow is cycled to fixation facilities supplied by IU Conversion Systems, Inc. (IUCS). At these facilities, the underflow is thickened, vacuum-filtered, and mixed with a blend of dry fly ash and lime to form a 73 percent solid substance (IUCS Poz-o-Tec). The product is currently discharged to a diked pond measuring 4.32 million m^3 (3500 acre-ft).

The wastewater pond receives ash sluice water, cooling water blowdown, and water from the sludge treatment plant. This system is not operating closed loop at the present time. Design information is presented in Table 2-8.[18]

TABLE 2-8. FGD SYSTEM DATA FOR CONESVILLE 5 AND 6, CONESVILLE, OHIO

Unit rating (gross), MW	411
(net), MW	375
Fuel	Bituminous coal
Average fuel characteristics:	
Heating value, kJ/kg (Btu/lb)	25,240 (10,850)
Ash, %	15.1
Moisture, %	7.5
Sulfur, %	4.7
Chloride, %	
FGD process	Lime (Thiosorbic)
FGD system supplier	Air Correction Division, UOP
Application	New
Status	Operational
Startup date:	
Initial	January 1977
Commercial	June 1978
Design removal efficiency:	
Particulate, %	99.6
Sulfur dioxide, %	89.5
Actual removal efficiency:	
Particulate, %	
Sulfur dioxide, %	
Water loop	Open
Total water makeup,	
liters/s per net MW	0.08
(gal/min per net MW)	1.25
Sludge disposal	Stabilized sludge disposed of in an onsite landfill

Figure 2-6 presents a simplified process flow diagram of the Conesville FGD system.

Performance history--The A-module of Conesville 5 was placed in service in November 1977, after startup was delayed by a fire. Conesville 5 was taken out of service in December 1977 for a scheduled 3-month overhaul, and the carbon steel stack liner was replaced with an acid brick liner.

Conesville 5 was returned to service in March 1978. Problems were then encountered with the thickener. An excess of flocculant was caused by a malfunction of the feed system, and the tank had to be drained.

From March through September 1978, system availability averaged 44 percent, with a high of 66 percent during April. A low of 18 percent in August was caused by scale that built up in the mist eliminator and required removal, and by outage time for replacement of some of the balls in the TCS regions. Figure 2-7 illustrates system operability from September 1977 to September 1978. Table 2-9 lists additional performance information.

Conesville 6 was placed in service in June 1978. Initial problems included a loss of control of the lowered dampers to the bypass system and back pressure buildups that caused automatic boiler shutdown. In July, the damper controls were adjusted in an attempt to correct the problem. Plugging problems have been experienced with the fiberglass reinforced plastic (FRP) transfer line from the thickener to the IUCS system. The utility has reported that the bypass control dampers as well as the sludge line tend to be high maintenance areas.

Through September 1978, Conesville 6 system availability averaged 61 percent. A high of 77 percent occurred in July; and a low of 50 percent in June. Since startup, monthly operating hours have increased from 174 in June to 372 in September. System operability is plotted in Figure 2-8 and additional performance data is indicated in Table 2-10.[19,20]

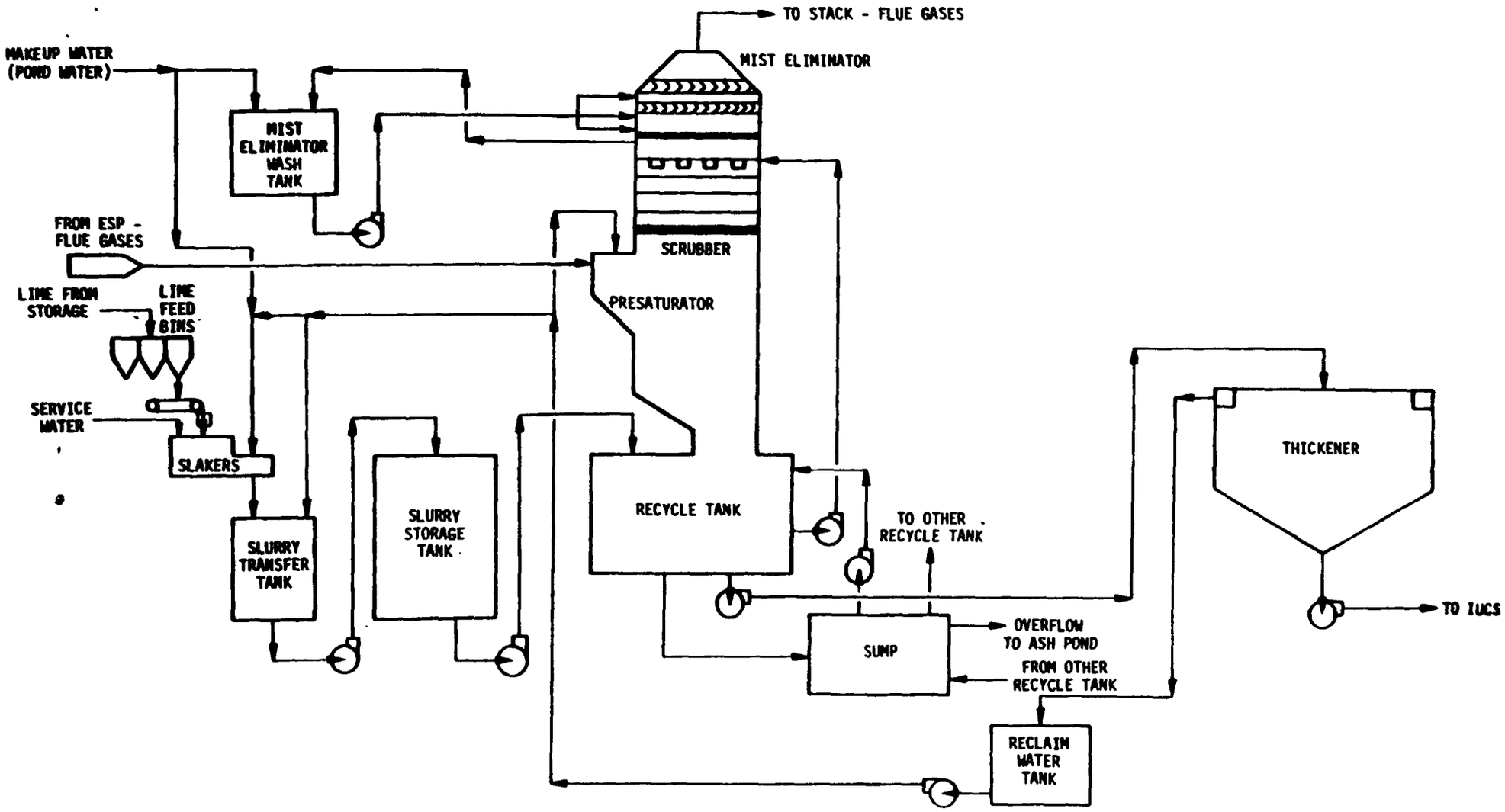

Figure 2-6. Conesville 5 and 6, simplified process diagram.
(Note: The second stage of packing in the Conesville 5 TCA towers has been removed)

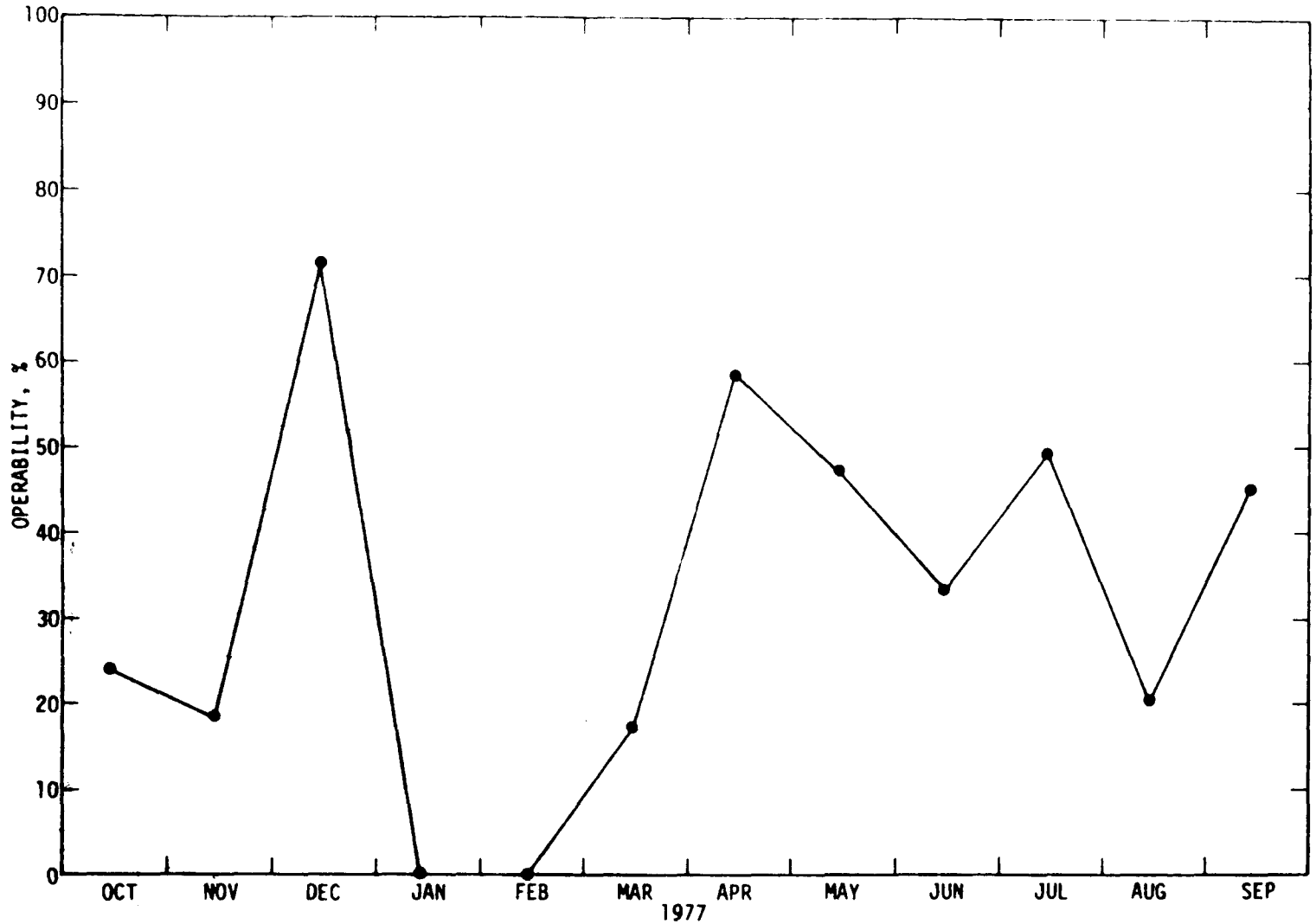

Figure 2-7. Scrubber system operability[a], Columbus and Southern Ohio Electric, Conesville 5.

[a]The operability index reflects the hours the FGD system was operated divided by boiler operating hours in the period.

TABLE 2-9. PERFORMANCE INFORMATION ON CONESVILLE 5, COLUMBUS AND SOUTHERN OHIO ELECTRIC

	Boiler hours	Availability, %	FGD system		Utilization, %
			Operability, %	Reliability, %	
October 1977	559	16	12	12	9
November	715	22	18	18	18
December		95	72	69	24
January 1978	0	0	0	0	0
February	0	0	0	0	0
March	379	20	18	59	9
April	716	66	58	62	58
May	720	53	48	48	46
June	720	39	34	34	34
July	727	55	50	50	48
August	667	18	20	20	18
September	707	58	45	54	44

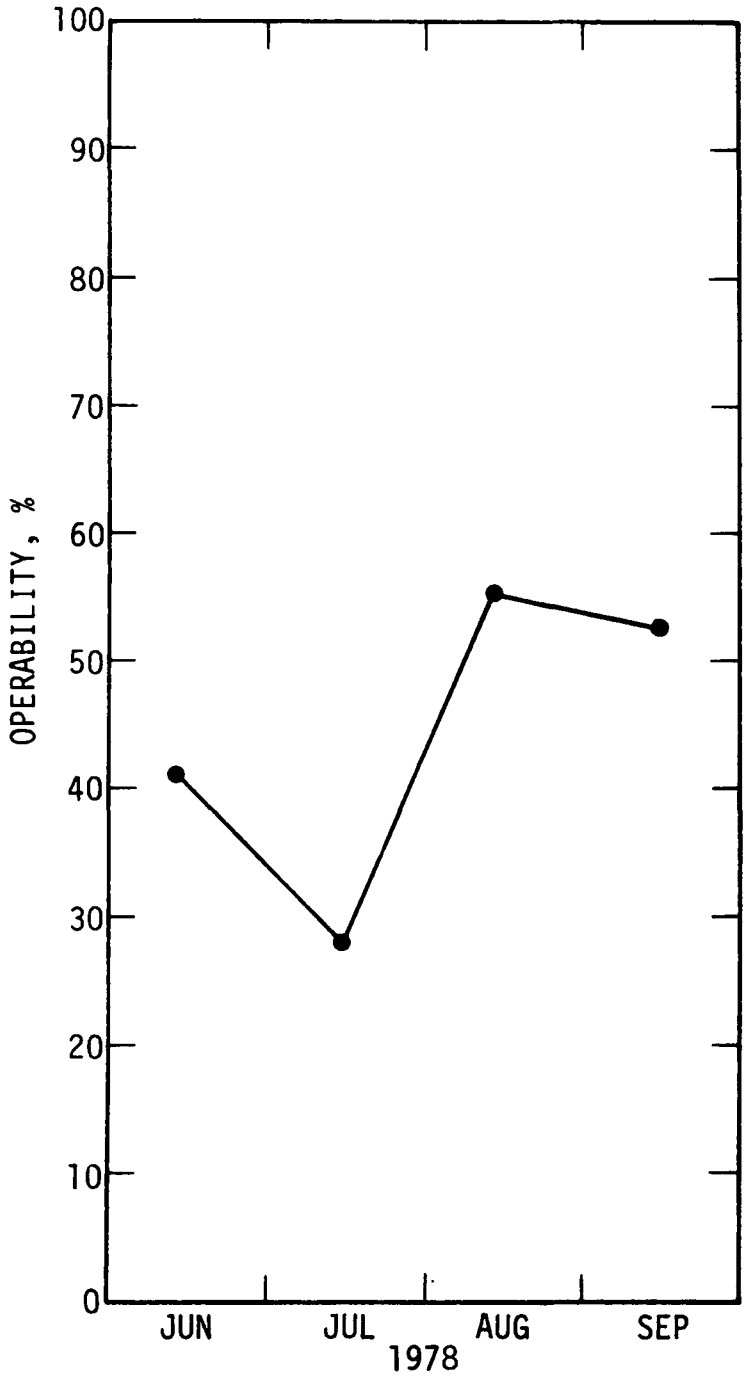

Figure 2-8. Scrubber System Operability[a], Columbus and Southern Ohio Electric, Conesville 6.

[a]The operability index reflects the hours the FGD system was operated divided by boiler operating hours in the period.

TABLE 2-10. PERFORMANCE DATA ON CONESVILLE 6, COLUMBUS AND SOUTHERN OHIO ELECTRIC

	Boiler hours	Availability, %	Operability, %	Reliability, %	Utilization, %
June 1978	524	50	41	42	36
July	502	76	28	48	19
August	642	55	55	74	48
September	706	62	52	55	52

2.1.2.2 Cane Run 4 and 5--

The Cane Run power station, located in Louisville, Kentucky, is operated by the Louisville Gas and Electric Company. The plant has six electric power steam generating units, providing a total steam turbine net generating capacity of 992 MW.

Cane Run 4 and 5 are coal-fired boilers with continuous net generating capacities of 178 and 183 MW, respectively. Cane Run 4 has a maximum power generation capacity of 190 MW; and Cane Run 5, a maximum power generating capacity of 200 MW. The coal burned at both units has an average heating value of 26,750 kJ/kg (11,500 Btu/lb) and average sulfur and ash contents of 3.8 and 15.5 percent, respectively.

Pollution control--The emission control system at Cane Run 4 consists of an electrostatic precipitator (ESP) upstream of a wet scrubbing system. The ESP provides primary particulate control while the wet scrubbing system provides additional particulate removal and primary sulfur dioxide control.

The FGD system consists of two identical, parallel, mobile bed absorber modules designed and installed by the American Air Filter Company (AAF). Each module is lined with precrete and Placite 4005 and utilizes polyurethane balls 3.18 cm (1.25 in.) in diameter as the packing material. The total scrubber system gas flow is 346 m^3/sec (734,000 acfm) at a temperature of 160°C (320°F). The liquid-to-gas ratio in each absorber varies from 7 liters/m^3 (55 gal/10^3 ft^3) to 9 liters/m^3 (65 gal/10^3 ft^3).

The wet scrubbing system utilizes a slurry of carbide lime, a waste product from a nearby acetylene manufacturing plant. The hydrated lime contains from 90 to 92 percent calcium hydroxide, 2.0 to 2.5 percent silica, and 3 to 8 percent calcium carbonate. It also contains 0.1 percent magnesium oxide.

From the FGD system, the scrubbed gases pass through a two-bank chevron-type mist eliminator lined with Plasite 4005 before exiting through a 76-m (250-ft) stack lined with precrete. Direct combustion reheat using oil as the combustion fuel provides a temperature boost of 28°C (50°F) to the exiting gases.

Spent absorbent from the FGD system is discharged to a thickener that is 23 m (75 ft) in diameter. The thickener underflow is dewatered by a vacuum filter, mixed with fly ash and lime, and disposed of in an onsite, clay-lined pond. The disposed material is 6 percent fly ash, 24 percent bottom ash, 33 percent sulfur dioxide waste, 3 percent unreacted reagent, and 33 percent water. The system operates with an open water to which makeup water is added at 6 liter/s (100 gal/min).

Additional system design information is presented in Table 2-11. Figure 2-9 provides a simplified process flow diagram.

The emission control system at Cane Run 5 was supplied by Combustion Engineering and consists of two spray towers downstream of the existing electrostatic precipitator, which provides primary particulate control. Carbide lime is utilized as the scrubbing reagent and is injected into each spray tower through a series of three spray stages. At full load, the gas velocity is 3 m/s (10 ft/s), with a pressure drop of approximately 0.75 kPa (3 in. H_2O) across the absorber. The FGD system capacity is 330 m^3/sec (700,000 acfm) at 154°C (310°F). The absorber liquid-to-gas ratio is from 8 to 13 liters/m^3 (60 to 100 gal/10^3 ft^3). An inline steam reheat system provides a temperature boost of 22°C (40°F) to the exiting flue gas. The FGD system produces 16 liters/sec (248 gal/min) of spent absorbent, which is discharged at 20 percent solids to a thickener 33.5 m (110 ft) in diameter. The sludge is ultimately stabilized and disposed of in an onsite clay-lined disposal pond.

Additional system information is presented in Table 2-12. Figure 2-10 provides a simplified process flow diagram.[22,23,24,25]

Performance history--After startup of the FGD system at Cane Run 4, many problems made it necessary for certain design modifications to be performed. Major problem areas included poor gas flow distribution and excessive pressure drop, which caused the booster fans to lack sufficient capacity and the boiler output to be limited to a maximum between 150 and 155 MW. The unit has a

TABLE 2-11. FGD SYSTEMS DATA FOR CANE RUN 4, LOUISVILLE, KENTUCKY

Unit rating (gross), MW	190
(net), MW	178
Fuel	Coal
Average fuel characteristics:	
Heating value, kJ/kg (Btu/lb)	26,750 (11,500)
Ash, %	15.5
Moisture, %	
Sulfur, %	3.8
Chloride, %	
FGD process	Lime (carbide)
FGD system supplier	American Air Filter
Application	Retrofit
Status	Operational
Startup date:	
Initial	August 1976
Commercial	
Design removal efficiency:	
Particulate, %	99.0
Sulfur dioxide, %	85.0
Actual removal efficiency:	
Particulate, %	99.0
Sulfur dioxide, %	86-89
Water loop	Open
Total water makeup,	
liters/s per net MW	0.04
(gal/min per net MW)	(0.6)
Sludge disposal	Stabilized sludge disposed of in an onsite sludge pond

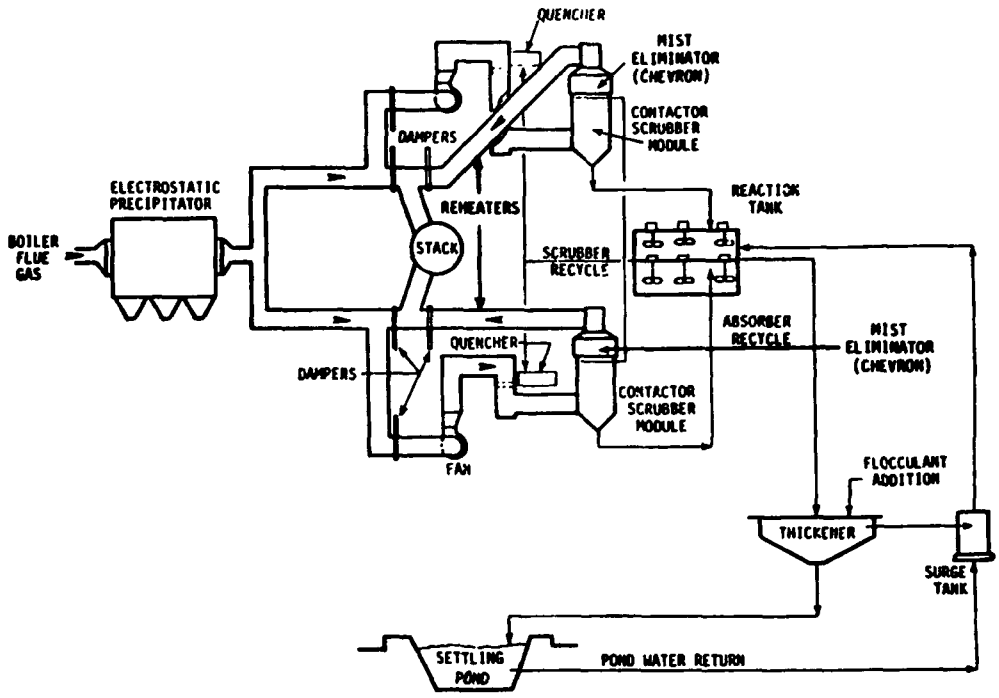

Figure 2-9. Simplified process flow diagram, Cane Run 4.

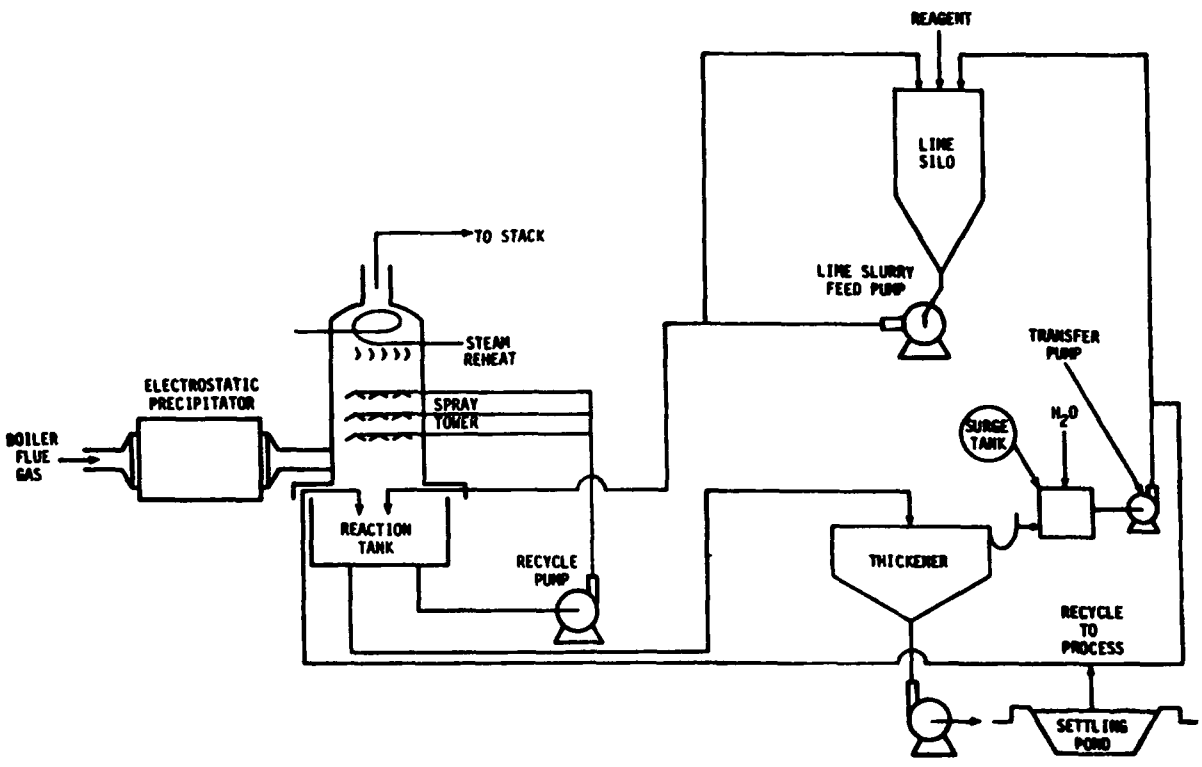

Figure 2-10. Simplified process flow diagram, Cane Run 5.

TABLE 2-12. FGD SYSTEMS DATA FOR CANE RUN 5, LOUISVILLE, KENTUCKY

Unit rating (gross), MW	200
(net), MW	183
Fuel	Coal
Average fuel characteristics:	
Heating value, kJ/kg (Btu/lb)	26,750 (11,500)
Ash, %	15.5
Moisture, %	
Sulfur, %	3.8
Chloride, %	
FGD process	Lime
FGD system supplier	Combustion Engineering
Application	Retrofit
Status	Operational
Startup date:	
Initial	December 1977
Commercial	June 1978
Design removal efficiency:	
Particulate, %	99.0
Sulfur dioxide, %	85.0
Actual removal efficiency:	
Particulate, %	
Sulfur dioxide, %	
Water loop	Open
Total water makeup, liters/s per net MW (gal/min per net MW)	
Sludge disposal	Stabilized sludge disposed in an onsite sludge pond

gross rating of 190 MW. Modifications included the installation of turning vanes in the flooded elbow and base of the scrubbers. The mist eliminator was converted to a chevron type by cutting away portions of the mist eliminator wheel.

Another problem was the low liquid-to-gas ratio of approximately 4 liters/m^3 (30 gal/10^3 ft^3). At high temperatures, the original spray nozzle casings expanded so much that the spinner vanes stuck out the front and caused the nozzle to plug. To correct this problem, the nozzles were replaced with ones constructed of sturdier ceramic material. More spray headers were also installed above the mobile beds, and the pump capacity was increased. The liquid-to-gas ratio was brought to approximately 8 liters/m^3 (60 gal/10^3 ft^3).

Other modifications were made to help improve overall sulfur dioxide removal efficiency. Underbed sprays were added to improve circulation of the mobile bed balls; and existing pH meters were replaced so that the pH could be monitored more precisely.

The modifications to the FGD system were completed in July 1977. Early in August, the system was tested for compliance with Jefferson County and Federal sulfur dioxide air emission regulations. The modifications enabled the system to meet the Jefferson County removal requirement of 85 percent and the Federal standard of 515.9 ng/J (1.2 lb/10^6 Btu). The testing was handled by EPA personnel and indicated a sulfur dioxide removal efficiency between 86 and 89 percent for coal containing from 3.3 to 3.4 percent sulfur. This efficiency is equivalent to an outlet emission value of 343.9 ng/J (0.8 lb/10^6 Btu).

The operability of the FGD system was greater than 90 percent from August through December 1977. After a lime feed line froze late in December, the system operated intermittently through January 1978; but there were no scrubber breakdowns.

A coal strike forced the unit to be shut down during February 1978. It came back on line in March, and no FGD system forced outages have been reported through September 1978.

Figure 2-11 illustrates system operability from September 1977 through September 1978. System operating information is presented in Table 2-13.

Initial operation of the FGD system at Cane Run 5 began on December 29, 1977. Some minor modifications were necessary for controls that were not operating properly. Cane Run 5 was removed from service in February 1978 because of a coal strike and was restarted in March. The FGD system logged approximately 91 hours in March, although initial startup problems still caused intermittent operation. From April through September 1978, operability was 80 percent or greater. Trouble with the reheat steam coils caused some outage time. The welds at the end of each bank of coils have been fouling since initial operation.

Performance tests were conducted from April through May 1978. Reports by the utility indicate that the tests were inconclusive because of poor handling of data and improper test procedures.

FGD system operability is illustrated in Figure 2-12 with additional performance data presented in Table 2-14.[26,27,28]

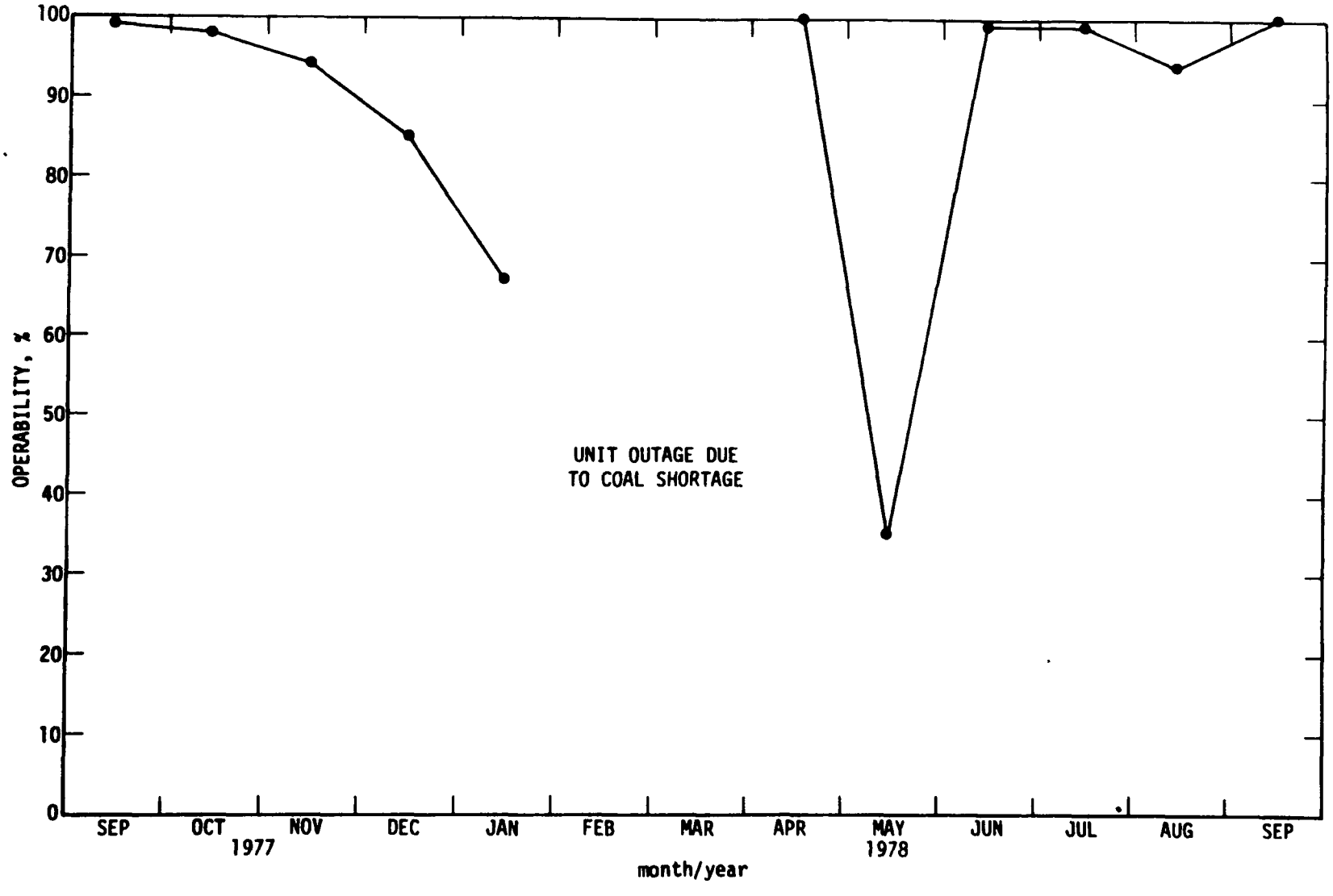

Figure 2-11. Scrubber system operability[a], Louisville Gas and Electric, Cane Run 4.

[a]The operability index reflects the hours the FGD system was operated divided by boiler operating hours in the period.

TABLE 2-13. OPERATING DATA ON CANE RUN 4, LOUISVILLE GAS AND ELECTRIC

	Period hours	Boiler hours	Scrubber hours	Performance factors, %	
				Operability	Utilization
September 1977	720	529	524	99	99
October	744	677	662	98	89
November	720	483	454	94	63
December	744	715	608	85	82
January 1978	744	-	-	67	67
February	672	0	0	0	0
March	744	-	249	-	34
April	720	303	303	100	47
May	744	352	115	35	12
June	720	720	715	99	99
July	744	687	678	99	91
August	744	744	701	94	94
September	720	138	138	100	19

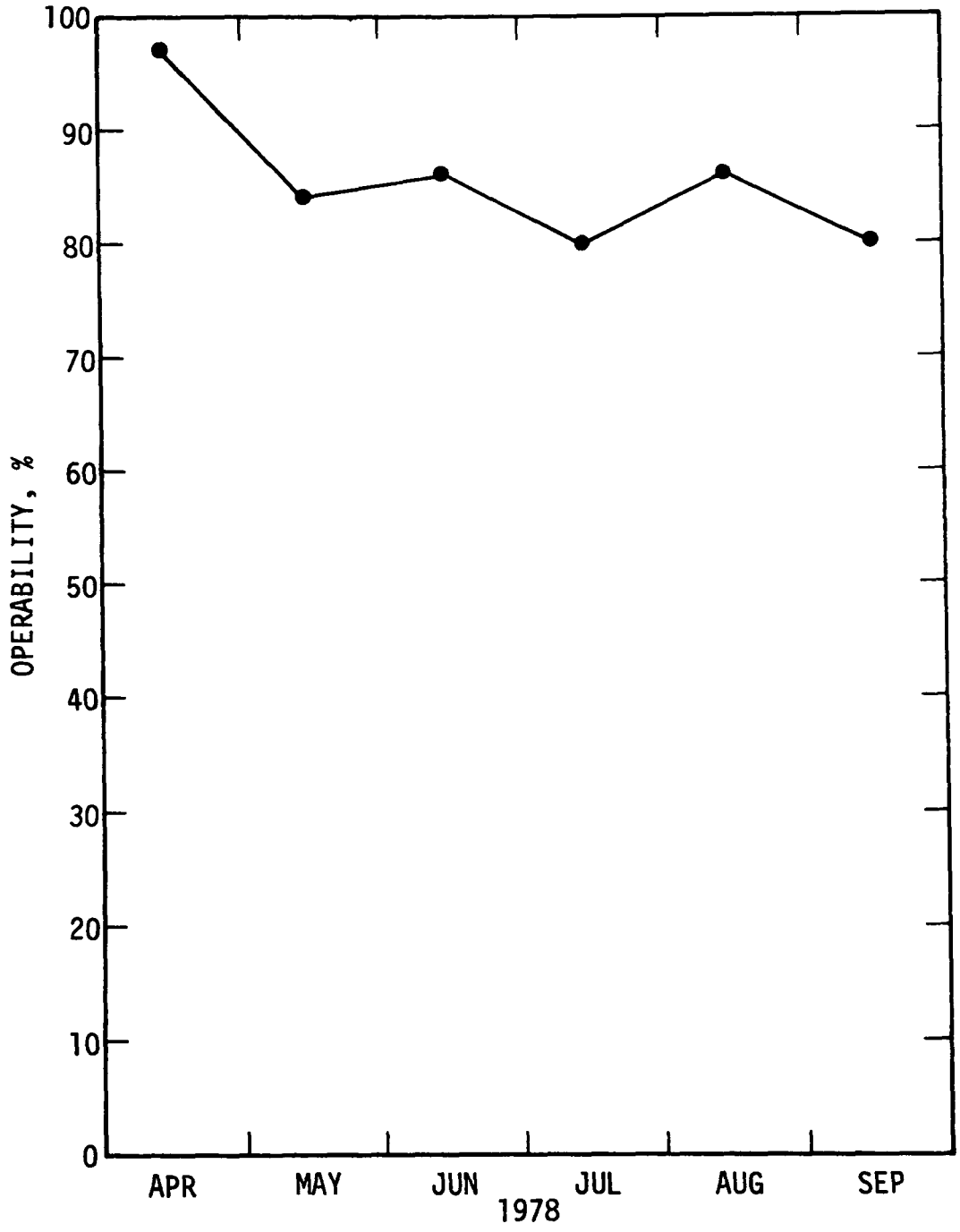

Figure 2-12. Scrubber system operability[a], Louisville Gas and Electric, Cane Run 5.

[a]The operability index reflects the hours the FGD system was operated divided by boiler operating hours in the period.

TABLE 2-14. OPERATING DATA ON CANE RUN 5, LOUISVILLE GAS AND ELECTRIC

	Period hours	Boiler hours	Scrubber hours	Performance Operability	factors, % Utilization
April 1978	720	669	648	97	90
May	744	432	364	84	49
June	720	685	590	86	82
July	744	632	506	80	68
August	744	540	464	86	62
September	720	609	485	80	67

REFERENCES FOR SECTION 2.1

1. Melia, M., et al. EPA Utility FGD Survey August-September 1978. Preliminary report. Prepared for the U.S. Environmental Protection Agency under Contract No. 68-02-2603, PEDCo Environmental, Inc., Cincinnati, Ohio. November 1978. p. 86.

2. Ibid. pp. 22-82.

3. Laseke, B.A., Jr. EPA Utility FGD Survey: December 1977-January 1978. EPA-600/7-78-051a. PEDCo Environmental, Inc., Cincinnati, Ohio. March 1978. p. 72.

4. Op. cit. No. 1. pp. 42-43.

5. Laseke, B.A., Jr. Survey of Flue Gas Desulfurization Systems: Green River Station, Kentucky Utilities. EPA-600/7-78-048e. PEDCo Environmental, Inc., Cincinnati, Ohio. March 1978. pp. 20-24.

6. Beard, J.B. Scrubber Experience at the Kentucky Utilities Company Green River Power Station. In: Proceedings of the Symposium on Flue Gas Desulfurization-Hollywood, Fl., November 1977, (Volume 1), EPA-600/78-058a. March 1978. pp. 248-249.

7. Op. cit. No. 3. p. 72.

8. Op. cit. No. 1. pp. 42-43.

9. Campbell, R.L. Emissions Testing Report, Kentucky Utilities Green River Station, Central City, Kentucky. PEDCO Environmental, Cincinnati, Ohio. October 1978.

10. Laseke, B.A., Jr. Survey of Flue Gas Desulfurization System: Bruce Mansfield Station, Pennsylvania Power Company. Preliminary report. Prepared for the U.S. Environmental Protection Agency under Contract No. 68-02-2603, PEDCo Environmental, Inc., Cincinnati, Ohio. November 1978. pp. vii-x.

11. Ibid. pp. 50-55.

12. Op. cit. No. 3. pp. 119-122.

13. Op. cit. No. 1. pp. 63-66.

14. Kelly, W.E., et al. Air Pollution Emission Test: Volume I: First Interim Report, Continuous Sulfur Dioxide Monitoring at Steam Generators. Emission Measurement Branch Report No. 77 SSP 23A, the U.S. Environmental Protection Agency, Research Triangle Park, North Carolina. August 1978. pp. ix-2, 51.

15. PEDCo in-house files.

16. Devitt, T., et al. Flue Gas Desulfurization System Capabilities for Coal-Fired Steam Generators. EPA-600/7-78-032b. PEDCo Environmental, Inc., Cincinnati, Ohio. March 1978. pp. A-15.

17. PEDCo in-house files.

18. Op. cit. No. 16. pp. A-15 through A-17.

19. Op. cit. No. 3. p. 32.

20. Op. cit. No. 1. pp. 27-29.

21. PEDCo in-house files.

22. Ibid.

23. Op. cit. No. 16. pp. A-9 through A-11.

24. Laseke, B.A., Jr. (PEDCo Environmental, Inc.). Notes on Trip to Louisville Gas and Electric Company's Cane Run Station. March 31, 1978.

25. Laseke, B.A., et al. Utility FGD Costs: Reported and Adjusted Costs for Operating FGD Systems. Preliminary report. Prepared for the U.S. Environmental Protection Agency under Contract No. 68-02-2603, PEDCo Environmental, Inc., Cincinnati, Ohio. September 1978. Form 9, p. 3.

26. Op. cit. No. 3. p. 76.

27. Op. cit. No. 1. pp. 44-45.

28. Op. cit. No. 24.

2.2 LIMESTONE SLURRY FGD SYSTEMS

There are currently 20 operational units totalling 8514 MW (net) in the United States that are equipped with FGD systems.

A list of the domestic operational units employing FGD systems appears in Table 2-15. These units are described in Appendix B, although some unit descriptions lack detail as a result of the unavailability of data from the utility or system supplier. The previously identified units, La Cygne 1 and Sherburne 1 and 2, are brought up to date in Section 2.2.1; and more recently operational systems are described in Section 2.2.2.

2.2.1 Domestic Units: Previously Identified Operational Systems

Since September 1977, a number of design and maintenance modifications have taken place on the previously identified FGD systems at La Cygne 1 and Sherburne 1 and 2. These units are addressed in the text that follows.

2.2.1.1 Kansas City Power and Light, La Cygne[1-4]--

Background--As a result of continuing modifications and improved operating procedures, the FGD system availability at La Cygne 1 has steadily improved since startup in 1973. Without time deductions for modifications, FGD system availability can easily average 95 percent. With the addition of the eighth module in April 1977, continuous daytime load capability now exceeds 800 MW without appreciably affecting scrubber operation.

The results of performance tests in August 1977 indicated that module gas flow was still below maximum design capability, that the induced- and forced-draft fans were loaded well below rating, and that most subsystems were in proper balance. Proper maintenance improved limestone utilization and control of scaling.

Because of the utility's effort to improve operating procedures and stabilize equipment operation, the scrubber operating and maintenance force was increased.

The text that follows summarizes the operating history and performance of the scrubbing system, the problems encountered and solutions, the current research and development, and the future initiatives that are planned.

TABLE 2-15. MAJOR DOMESTIC OPERATIONAL LIMESTONE FGD INSTALLATIONS

Company	Station/unit	Size[a], MW	Initial startup date	New or retrofit	Coal sulfur content, %	Design sulfur dioxide removal efficiency, %	Actual sulfur dioxide removal efficiency, %
Alabama Electric	Tombigbee 2	225	8-78	New	1.15	60	
Arizonia Electric Power	Apachee 2	200	9-78	New	0.7	85	
Arizonia Public Service	Cholla 1	115	10-73	Retrofit	0.4 1	92[b]	50 - 60
Arizonia Public Service	Cholla 2	250	6-78	New	0.4 1	75	
Central Illinois Light	Duck Creek 1	400	8-78	New	2.5 3	85	91.6
Indianapolis Power and Light	Petersburg 3	515	10-78	New	3.25	85	
Gulf Power	Sholz 1 and 2	23[c]	8-78	Retrofit	2.0	90	
Kansas Power and Light	LaCygne 1	820	2-73	New	5.0	76	80.1
Kansas Power and Light	Jeffrey 1	680	8-78	New	0.3	60	
Kansas Power and Light	Lawrence 4	115	12-68	Retrofit	0.5	76	90+
Kansas Power and Light	Lawrence 5	400	11-71	New	0.5	52	
Northern States Power Co.	Sherburne 1	680	3-76	New	0.8	50[d]	50 - 55
Northern States Power Co.	Sherburne 2	680	1-77	New	0.8	50[d]	50 - 55
South Carolina Public Service	Winyah 2	258	7-77	New	1.0	70	85
Southern Mississippi Electric	H.D. Morrow 1	180	8-78	New	1.0	85	
Springfield City Utilities	Southwest 1	173	4-77	New	3.5	80	92
Tennessee Valley Authority	Widows Creek 8	550	5-77	Retrofit	3.7	80	85 - 94
Texas Utilities	Martin Lake 1	750	10-77	New	1.0	60	73.9
Texas Utilities	Martin Lake 2	750	5-78	New	0.9	71	
Texas Utilities	Monticello 3	750	5-78	New	0.9	74	

[a] Net with FGD (except where otherwise indicated).

[b] The A-side train includes the packed absorber with limestone slurry circulated through the module. SO_2 removal for the A-side is 92 percent. The B-side train does not include packing or limestone slurry and removes approximately 25 percent of the SO_2. Total system removal efficiency is 58.5 percent.

[c] FGD system size (prototype unit).

[d] The FGD system also collects fly ash rich in CaO which contributes to SO_2 removal.

Problems and modifications--La Cygne 1 has undergone a number of modifications in an effort to improve system performance. Although many problems have remained unresolved and more problems are surfacing, some have been eradicated.

Improved maintenance procedures in early 1977 (acid flushing, sonic cleaning, and periodic water backflushing) have produced linear pH response, reduced limestone usage by approximately 30 percent, and improved scaling control. In the past, it was nearly impossible to operate the inline glass cells that monitor pH without caking the limestone during shutdown or eroding the cells during operation with high concentrations of fly ash in the slurry.

The redesigning of the original mist eliminator wash system, which operated with sprays of blended freshwater and recycled pondwater, has eliminated plugging and scaling. The intermittent system was removed; and the continuous system, which delivered water at 8.8 liters/s (140 gal/min), was moved from underneath to above the first mist eliminator of the two-stage system. More nozzles were added to the continuous wash system, so that it delivers water at a rate of 15 liters/s (230 gal/min). As of September 1978, the utility was studying some new two-stage and three-stage mist eliminators installed in the the scrubbing system. More efficient mist elimination would lower the frequency of reheater cleaning and reduce loss of slurry and related, FGD-promoted, particulate emissions.

The induced-draft (ID) fans are located downstream from the reheater. Carryover to the blades of these fans continues to require regular fan washings. Each fan now requires cleaning every 4 to 7 days. A new cleaning process, a "spinning" wash with low-pressure hoses, has made the high-pressure wash seldom necessary. The scrubber system includes six parallel induced-draft fans, one of which is held as a spare on a rotating basis. Fans are cleaned when they are out of service as spares.

After approximately 5.5 years of commercial operation, some materials that have not been modified are wearing out. Rubber

pipe linings and rubber-lined pumps have been an increasing maintenance problem. Rubber linings that tear out cause damage in other piping or pumps, plug nozzles, and allow the steel pipes to wear through. Wear did not present a significant problem in the past; however, the constant flow of abrasive slurry has slowly eroded some parts of the system. Module availability will suffer as repairs become necessary.

Corrosion of carbon steel in the ductwork, dampers, induced-draft fan rotors and housings, breeching, and stack liner is still a major problem. Burning high-sulfur coal in conjunction with module outages can create high sulfur trioxide concentrations on these surfaces. This "cold-end corrosion" damage requires extensive surveillance by maintenance engineers, and unit outages should be planned to take into consideration temperatures and time requirements for application of special coatings.

The scrubber operating and maintenance force has been increased to 54 people with the addition of one electrician and two technicians. The continued improvements in operating procedures and stable equipment operation should permit analysis of improved chemistry and control parameters. The utility has reported that the increase in staff is necessary if any further progress is to be made, particularly in maintaining pH cells and sulfur dioxide analyzers.

There have also been increased demands upon maintenance personnel to accumulate, record, and evaluate operating data on water saturation trends, limestone utilization, draft fan wear rates, failures of reheater steam tubes and lined pumps, replacements of nozzles and rubber-lined pipe, use of spare parts, etc. The operators are also busy updating operational and special instructions and reviewing safety and training procedures.

Other proposed modifications include the following:

> Installation of an improved steam source to increase the supply for module reheater service from 32,000 to 54,000 kg/h (70,000 to 120,000 lb/h) and permit additional steam bundles for optimum reheat.

- Construction of an additional sludge pond for deposit of scrubber spent slurry for approximately 30 years. Adding another disposal pond might also allow clear water to be recycled to the scrubber for improved chemistry.

- Installation of a second mist eliminator in the remaining five modules and evaluation of the possible addition of a third mist eliminator. (This was not possible in the past because of the early problems with scaling.)

- Initiation of a study on the submicrometer fly ash and sulphuric acid mist that pass through the scrubber without being collected.

- Continuation of work to devise a better method to clean inline reheat tubes without taking equipment out of service.

Performance--La Cygne 1's FGD system availability has steadily improved since startup in 1973. The averages have been 76.3, 84.3, 92.0, and 92.5 percent for 1974, 1975, 1976, and 1977, respectively. From January through September 1978, the average availability was 93.2 percent.

Sulfur dioxide removal efficiency averaged 77 percent with individual modules averaging from 65 to 80 percent. Particulate emissions from the plant have met EPA and Kansas State requirements. However, work is continuing to reduce the particulate emissions from this unit.

Current operating experience reports have indicated no major scrubber problems. No FGD-related forced outages were reported for La Cygne 1 from September 1977 to September 1978 (latest data available for this report). Outages reported were a result of boiler and turbine problems and, in one case, a low demand for power. During the scheduled and unscheduled (forced) boiler outages scrubber work was carried out. The flue gas cleaning system has primarily required routine maintenance. The only modifications have been a steam coil bundle replacement in the reheat system and the mist eliminator modifications mentioned earlier.

The improved mist elimination is expected to yield better system performance, lower the frequency of reheater cleaning, and reduce the loss of slurry and related FGD-promoted particulate emissions. Figure 2-13 summarizes La Cygne 1 availability data. As shown, availability for September 1977 through September 1978 averaged about 94 percent. Figure 2-14 shows an updated flow diagram of one of the eight FGD modules at La Cygne 1 and Figure 2-15 shows a diagram of the overall installation.

Sulfur dioxide removal efficiency for the whole installation averaged 77 percent in an August 1977 test, and individual modules averaged between 65 and 80 percent. Table 2-16 shows the test results.

2.2.1.2 Northern States Power, Sherburne 1 and 2[5-8]--

Background--The operations of the Sherburne scrubbing systems have been rather successful. The success has, in part, resulted from the continual efforts by Northern States Power (NSP) and Combustion Engineering to improve scrubber performance through design and operation modifications, some of which were included in the previous report.

The text that follows summarizes the operating history and performance of the scrubbing system, problems encountered and solutions, current research and development, and the future initiatives that are planned.

Problems and solutions--The performance of the scrubber systems has exceeded minimum design expectations and has steadily improved over the course of the operating period (up to September 1978). This improvement has come from the accumulation of operating experience, the resolution of specific problems, and design modifications undertaken to resolve or prevent operating problems. Many problems have been encountered, and some continue to reduce system availability. A discussion of the major problems and solutions and modificiations that have resulted is given in the following paragraphs.

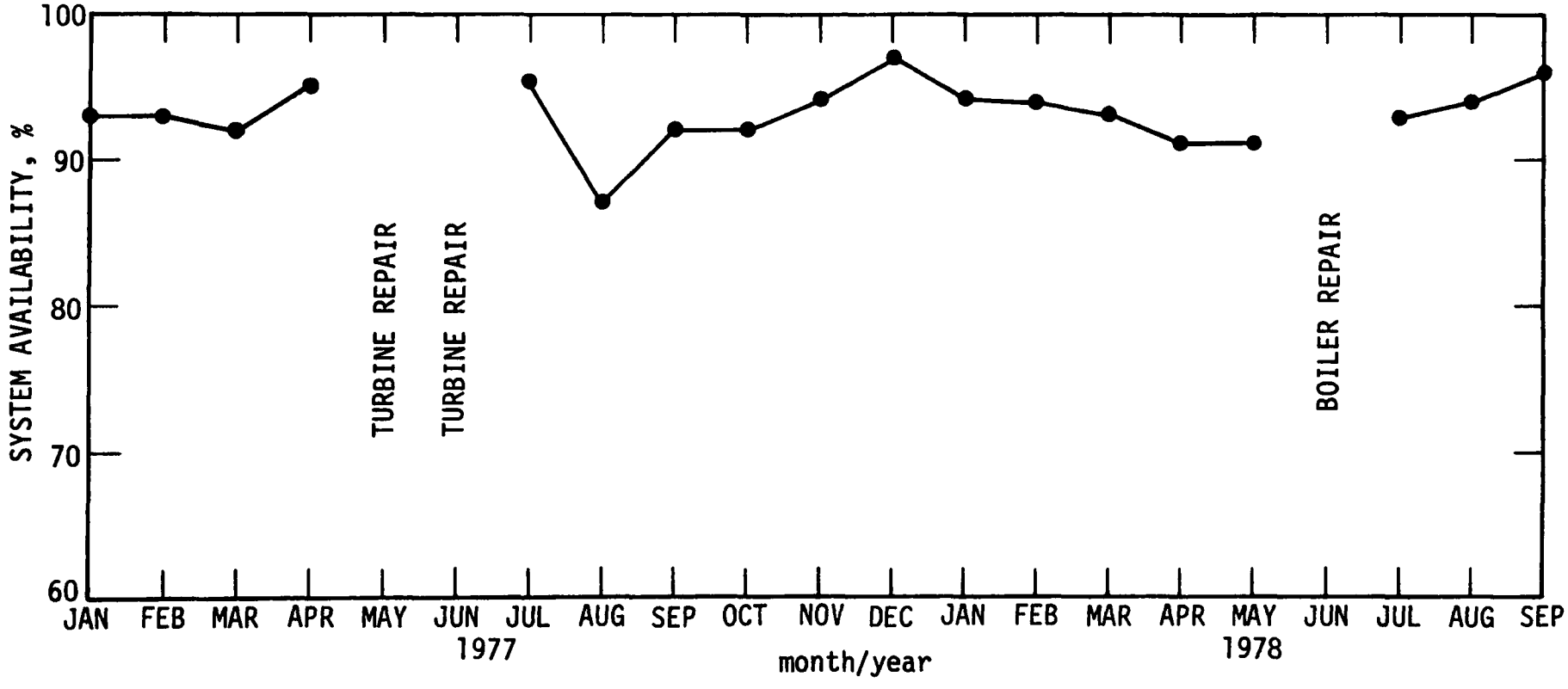

Figure 2-13. Availability history of La Cygne 1, Kansas City Power and Light.

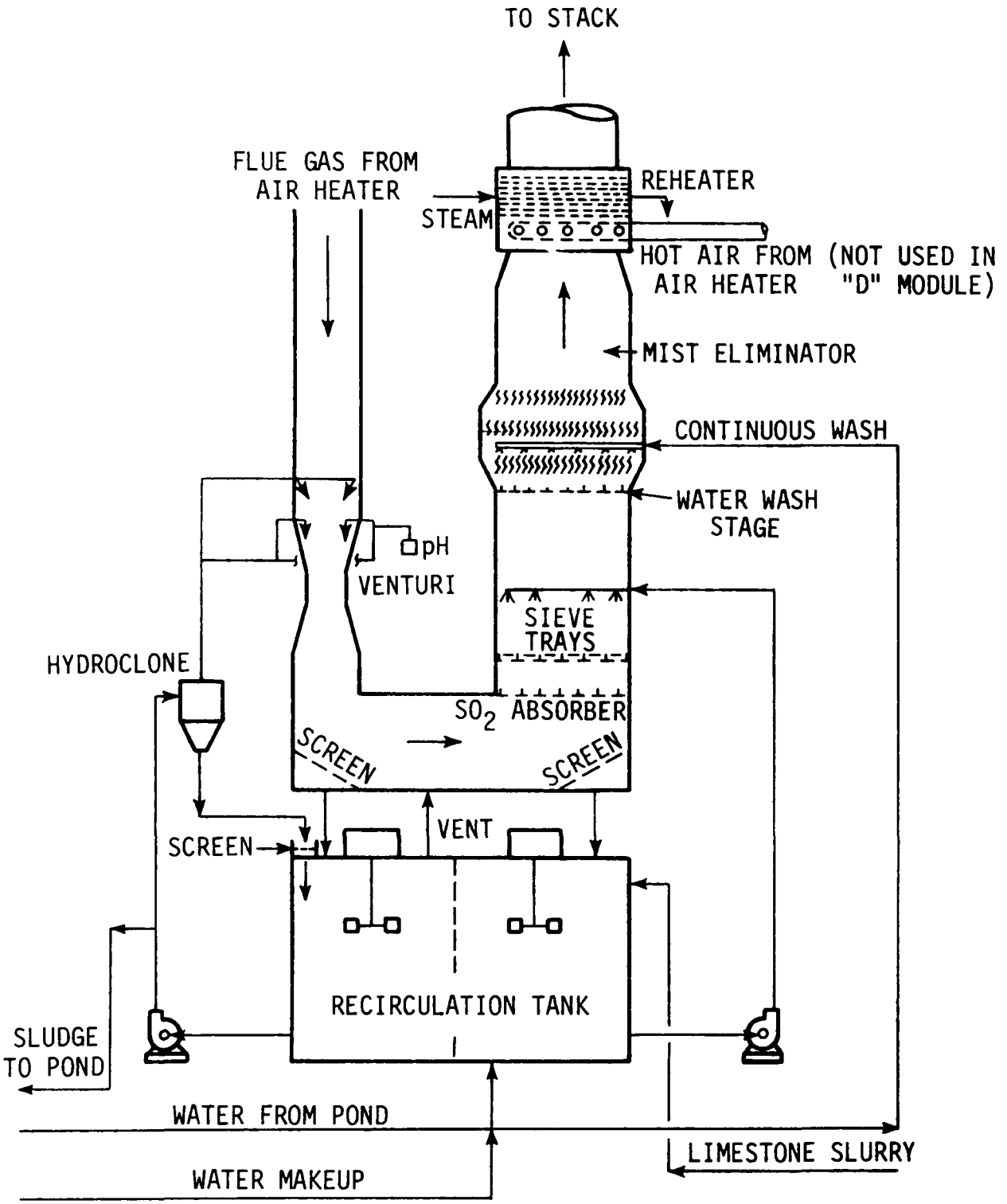

Figure 2-14. Flow diagram of one of the eight FGD modules at La Cygne 1.

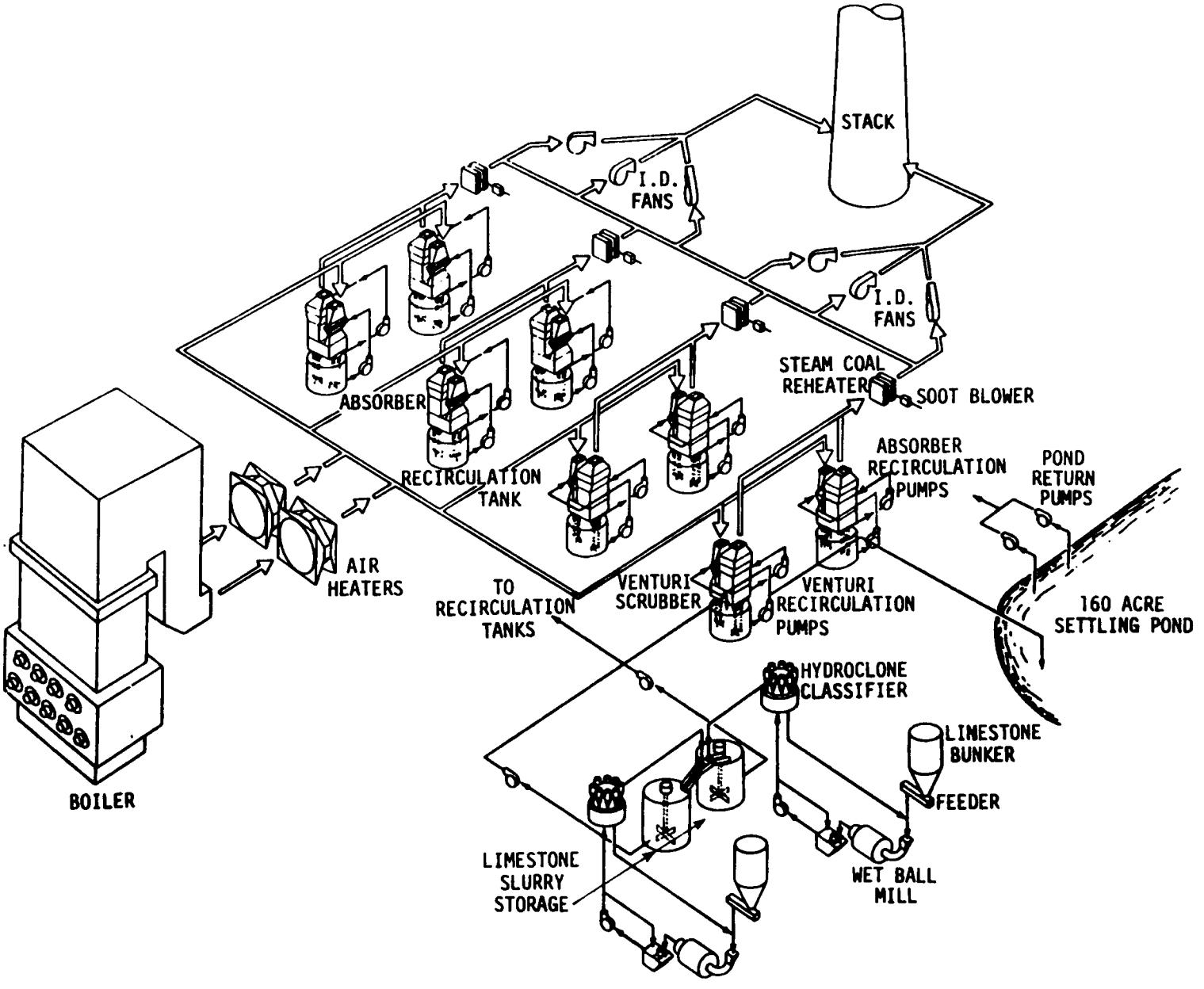

Figure 2-15. La Cygne limestone wet scrubbing system.

TABLE 2-16. LA CYGNE STATION UNIT NO. 1 4-HOUR FULL LOAD AND STACK EMISSION TEST

Date: August 26, 1977
Time: 11:00 a.m. - 12:00 midnight
Load range: 800+ MW
Ambient temperature: 34°C (94°F)

NO_x emission: 348 ng/J (0.81 lb/10^6 Btu)
Average SO_2 removal: 77%
Particulate emission: 91.6 ng/J (0.213 lb/10^6 Btu)

	TEST RUNS							
	A	B	C	D	E	F	G	H
Gas flow indicated, m^3/s (acfm)	0.189(400)	0.165(350)	0.179(380)	0.189(400)	0.166(352)	0.179(380)	0.175(370)	0.173(366)
Throat position	Open	Open	Open	Open	Open	Open	Open	Open
Reheat temperature, °C (°F)	77(170)	88(190)	66(150)	88(190)	85(185)	82(180)	71(160)	77(170)
Venturi pressure change, kPa (in. H_2O)	1.2(5)	1.4(5.5)	1.2(5)	1.2(5)	1.2(5)	1.2(5)	1.2(5)	1.2(5)
Reheater pressure change, kPa (in. H_2O)	0.62(2)	1.4(5.5)	1.1(4.5)	1.1(4.5)	1.2(5)	0.63(2.55)	1.1(4.5)	1.4(5.5)
Absorber mist eliminator pressure change, kPa (in. H_2O)	1.6(6.5)	1.4(5.5)	2.5(10)	1.9(7.5)	1.7(7)	1.6(6.5)	2.0(8)	1.7(7)
Reheat outlet damper position, % open	50	100	96	38	100	52	100	100
ID fan load, Amps. (maximum)	380	420	380	400	470	470		
Inlet damper position of ID fan % open	42	42	32	36	36	40		
FD fan load, Amps. (maximum)	490	470	430					
Laboratory pH	5.45	5.7	5.55	5.7	5.58	5.77	5.72	5.29
Sulfite concentration, g/liter	60.4	72.4	101.0	74.1	70.0	43.9	43.9	63.6
Carbonate concentration, g/liter	50.3	75.6	53.1	54.4	59.4	83.8	68.1	42.5
SO_2 removal efficiency, %	80.0	82.1	74.9	64.3	76.4	72.1	73.1	74.8
Inlet SO_2, ppm	4600	4600	4600	4600	4600	4600	4600	4600
Outlet SO_2, ppm	920	825	1150	2285	1085	1285	1235	1160

Original scrubber equipment included slurry line strainers, comminuters, and perforated plates that were designed to remove large chunks and solid particles from the slurry circuit and thus prevent nozzle plugging. The arrangement of this equipment for each module is illustrated in Figure 2-16. The failure of the equipment to perform its function has contributed to nozzle plugging, the most significant problem affecting system availability.

The original strainers were Zurn duplex units, located on the discharge of the slurry spray pumps; these units were designed to remove solid particles larger than 6.4 mm (0.25 in.) in diameter. In operation, however, frequent episodes of strainer plugging, mechanical failures, and inability to remove large particles caused severe nozzle plugging and low system availability. The duplex design also resulted in impractical operation and maintenance requirements. After extensive, futile efforts to remedy these problems, the strainers were abandoned in favor of a new design.

The reaction tanks were originally equipped with a comminuter and an internal perforated plate to capture and grind large chunks of solids that accumulated in the slurry circuit. The equipment proved to be unnecessary because large chunks are not normally generated within the module. The plate also tended to be a convenient site for scale formation, which eventually plugged it. These experiences, along with the decision to design a new strainer, led to the removal of the comminuters and the lower portion of the perforated plate.

Combustion Engineering installed new intank strainers, consisting of large, semicircular perforated plates fitted around the suction side of the spray pumps. Each strainer is equipped with an oscillating and retractable wash lance for periodic backwashing. Figure 2-17 shows a diagram of the redesigned intank strainer and wash lance arrangement.

One strainer, constructed of carbon steel, was installed in September 1976 and resulted in an immediate improvement. All the

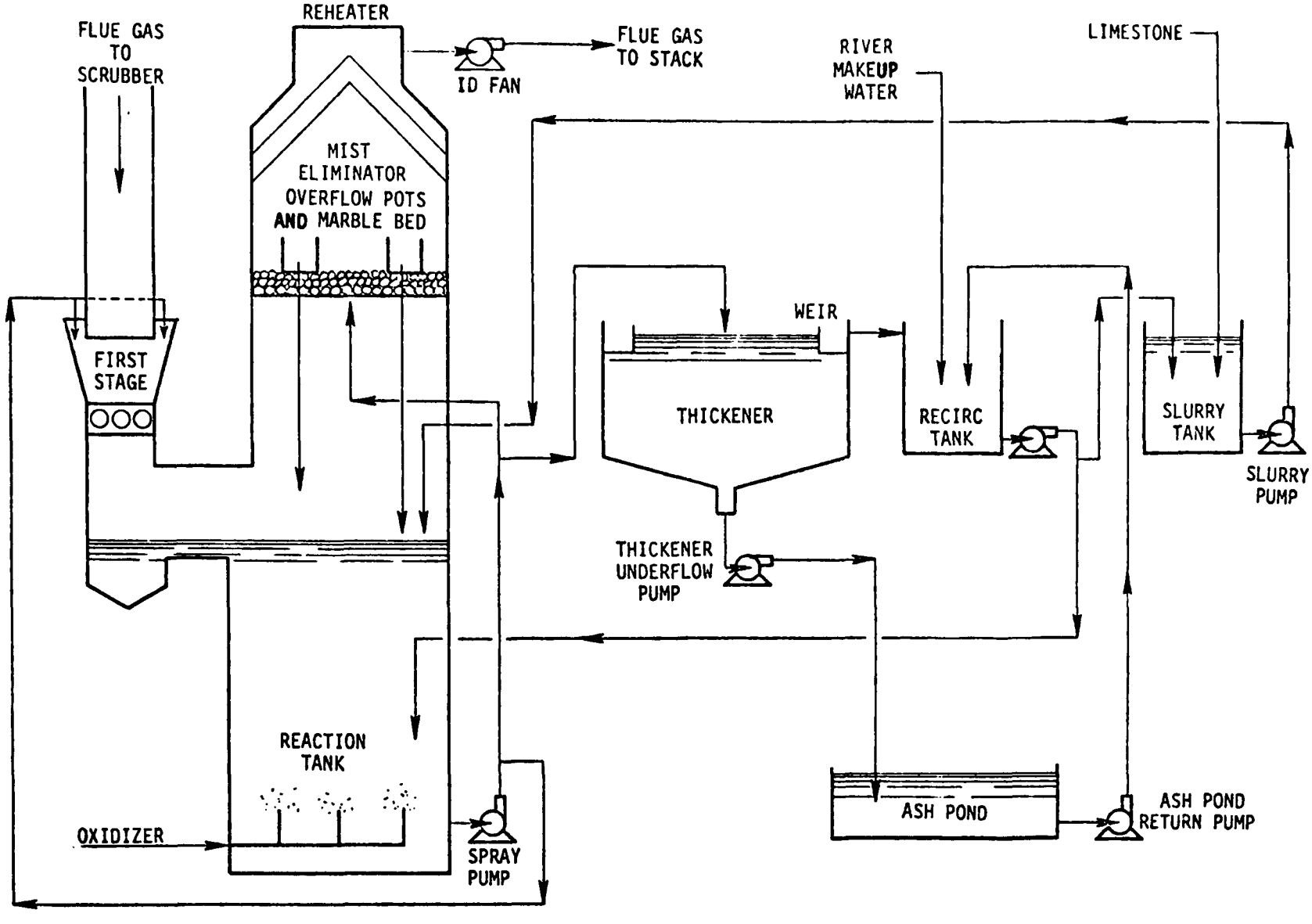

Figure 2-16. Simplified process diagram for Northern States Power Co., Sherburne 1 and 2 FGD system.

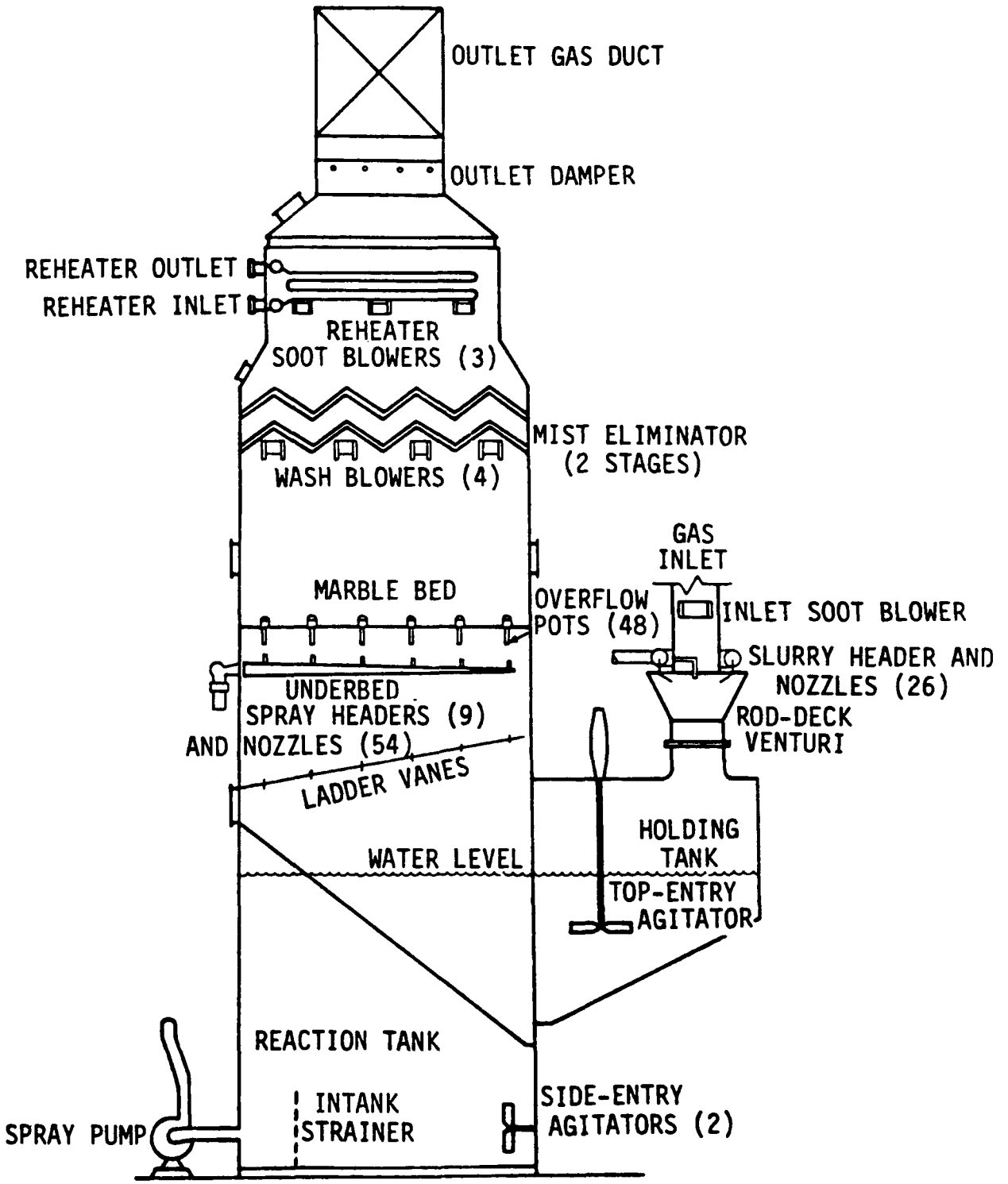

Figure 2-17. Simplified diagram of a Sherburne scrubber module.

modules were equipped with the new design by March 1977. The remedy has not, however, been a complete success. Nozzle plugging persists, primarily because of scale formation that is sheared off and carried to the nozzles from the strainer and piping headers. Further, the tendency of the strainers to plug activates the wash lance; and repeated, efficient backwashing has caused strainer material failures (erosion of carbon steel plate) and a dilution of slurry solids that adversely affects process chemistry. The first problem has been corrected by using 316 stainless steel perforated plates. The second is being corrected by devising a wash lance with a different supply pressure and capacity.

Erosion of the rod-deck venturi housing and rods has been a continual problem. The housing erosion has been traced to the direct impingement of slurry from the spray nozzles. Sacrificial wear plates of 316L stainless steel construction have been fastened to the inside of the converging section of the venturi. The rubber-coated, 316L stainless steel rods failed shortly after installation. As a temporary solution to this problem, sacrificial wear plates of stainless steel angle iron were welded to the bottom rod deck. The cause of the premature rod wear has been linked to the large pressure drops across the rod-deck venturi scrubbing stage. This stage was originally designed to operate at a pressure drop of 2.1 kPa (8.5 in. H_2O). To meet particulate guarantees and lessen the opacity of stack emissions, the pressure drop was increased to 3.3 kPa (13 in. H_2O).

The Ni-Hard impellers and wear plate of the original slurry spray pumps were designed by Worthington to supply slurry at 353 liters/s (5600 gal/min). They must be inspected and/or replaced every 4000 to 6000 hours. On selected modules, Northern States Power (NSP) is evaluating the use of 28 percent chrome-iron internals and rubber-lined internals for the spray pumps. The evaluation is still in progress; several modules on both systems are being refitted with rubber-lined pumps having higher flow rates.

The slurry recirculation and effluent bleedoff piping is lined with rubber (LaFavorite) up to the entry into the spray headers (Hetron FRP). Failures have been numerous. The rubber is sheared off in chunks by the abrasive slurry and carried to the nozzles and spray headers. Such piping design errors as too many reducers and sharp bends create part of the problem by causing accelerated wear and failure at these points. The utility first tried to solve the problem by removing the lining, but removal produced accelerated wear and erosion of the unprotected carbon steel piping. The performance of fiber-reinforced plastic (FRP), stainless steel, and rubber-lined spool pieces is currently being evaluated.

Numerous failures have also occurred in the thickened slurry underflow piping. The original fiberglass piping has been replaced with Ni-Hard piping. The mist eliminator wash lances, which are retractable, and soot blower washers are also constructed of fiberglass; and NSP is evaluating a stainless steel construc-tion for this application.

Material failures and modifications have affected the arrangement and construction of the spray nozzles in the rod-deck venturi. The nozzles were originally designed to extend into the gas stream to ensure proper spray distribution and to minimize the buildup of deposits on the rods. The nozzles themselves, however, provided convenient sites for solids deposition and had to be replaced with a new design that did not extend into the gas stream; but this modification resulted in improper spray distribution and subsequent buildup on the rods. New nozzles, designed to cover the rod decks adequately and yet not extend into the gas stream, have been installed and are functioning properly.

Nozzles constructed of Nordell (a proprietary plastic) and carbon steel orifices were originally installed in the slurry recirculation lines of the modules. These components failed after a short time and were replaced with ceramic nozzles and orifices. Although initial performance after this change was encouraging,

the nozzles eventually failed because of erosion in the tangential cone forming chamber. Different nozzle types have been substituted for evaluation.

The main body of the marble bed scrubber module is lined with a flaked fiberglass material (Ceilcote) that has been troweled on the carbon steel shell from the slurry level to the reheat section. Numerous failures of this coating have been encountered in the modules of Sherburne 2. Pinholes have formed, and chunks of coating have fallen off. Because these problems have been encountered only in Sherburne 2, they are believed to stem from improper application. The manufacturer has repaired the liners at no cost to NSP.

The sidewalls above the slurry level in the venturi area have been eroded by slurry cascading down from the rods and impinging on the sloped surfaces. Failure of the flaked fiberglass in this area led to the addition of 316L stainless steel wear plates.

Some minor material failures in the reheater were observed during the early stages of operation. This was the result not of external or internal corrosion, but of external erosion caused by initial weld failures and compounded by washing after the initial failure. A straightening bar that caused weld failures by adding undue stress was removed. No failures have occurred since this modification.

The slurry thickening and sludge disposal system has had several problems since startup. During the winter of 1976-1977, for example, the rake drive on Sherburne 1's thickener kicked out on torque overload. The situation was not detected for a considerable period, and the entire thickener filled with sludge. Slurry from both units was then temporarily piped to one thickener (Sherburne 2 was not in commercial service at the time), which was able to accommodate the extra volume with a minimal loss in efficiency.

Solids are thickened in a ratio of 2.5 to 1. The thickeners were designed for an inlet of 10 percent solids, an outlet from

25 to 30 percent solids, and an overflow with no solids. As the equipment is now operated, part of the recycled water is used to sluice down an ash hopper in the boiler economizers. Average thickener inlet is less than 5 percent solids; thickener bottoms are about 12 percent solids; and overflow is about 1 percent. No flocculants are required.

Other problems have included plugging in the sludge pump suction piping and valves, plugging in the dead leg pipes, failures and freezing in the sludge transport lines because of hydraulic and drainage problems, and electrical malfunctions of valve operators. A complete design review was performed, and the following modifications have been or are being made:

- Modification and relocation of thickener sludge pump discharge piping.
- Installation of slower operators on selected valves in sludge piping to reduce water hammer.
- Installation of larger pumps and redesign of piping in the scrubber pump house.
- Leveling the sludge lines to the fly ash pond.
- Installation of surge restraints (accumulators) on sludge lines.
- Connecting slurry inlets to thickeners, so that either unit can discharge into either thickener.

Research development and future initiatives--Northern States Power and Combustion Engineering are cooperating in a scrubber improvement program that encompasses two primary objectives: (1) optimization of the operation of the Sherburne 1 and 2 scrubber systems and (2) development of the process design and operating parameters for Sherburne 3 and 4. Specific goals included in the first objective are:

- Increasing particulate and sulfur dioxide removal efficiencies.
- Reducing manpower and operating costs. At present, 54 persons are employed to operate and maintain the systems. The instrument technician crews (4) and cleaning crews (21) have been unexpectedly large.

- Developing a more efficient and durable rod-deck venturi scrubber section.

- Improving control applications. The utility has already installed and activated a computer monitoring and control system.

Several equipment modifications are being implemented as a result of the goals. These modifications include:

- Installation of a separate effluent bleedoff pump for each module to replace the present procedure of bleeding off the slurry spray discharge line.

- Modification of the rod-deck venturi section with different materials and design and with rods 11.4 cm (4.5 in.) in outer diameter.

- Continuation of the testing of different materials for the rods, pumps, piping, and nozzles.

Module 101 of Sherburne 1 has been modified for the research program to develop process design and operating parameters for Sherburne 3 and 4. Specific equipment modifications include:

- Removal of the marble bed and conversion to a spray tower design.

- Operating the rod-deck venturi scrubbing stage with a pressure drop from 3.8 to 4.3 kPa (15 to 17 in. H_2O).

- Modification of the rod decks to use rods 18 cm (7 in.) in outer diameter in a slightly different configuration.

- Incorporation of a bulk entrainment separator before the mist eliminator to improve particulate removal. A wash tray will also be added upstream of the mist eliminator to test its effect on mist eliminator cleanliness.

- Testing the effect of the liquid-to-gas (L/G) ratio on sulfur dioxide and particulate removal efficiencies. The L/G ratio for Module 101 will be doubled by coupling in the slurry spray pump and piping from another module for a short time.

Operating history and performance--Sherburne 1 was first fired in early 1976 and was placed in service on March 26, 1976.

Commercial operation of the unit began on May 1, 1976. Sherburne 2 was first fired in late 1976 and was placed in service on January 25, 1977. Commercial operation began on April 1, 1977.

The scrubbing systems were started and certified commercial at the same time as their respective power generating units. For Sherburne 1, system availability average 55 percent during the first 3 months of operation after commercial startup. During the remaining 4 months of 1976, however, availability rose to an average of 94 percent. Thus average availability in 1976 was 90 percent. In 1977, the annual average availability for the Sherburne 1 scrubber system was 93 percent. From January through September 1978, the availability averaged 93 percent.

For Sherburne 2, scrubber system availability averaged 93 percent from April through December 1977. From January through September 1978, the availability averaged 94 percent. The slightly better availability of the scrubber system on Sherburne 2 since commercial startup may be attributed to the design and operating experience gained by the utility and system supplier with Sherburne 1. Figure 2-18 shows the average monthly FGD system availability since January 1977 for Sherburne 1 and 2. Tables 2-17, 2-18, 2-19, and 2-20 show the data from which Figure 2-18 was derived.

Another index by which to measure the performance of the scrubber systems is the kilowatt-hour (kWh) output of the generating units. Because the systems cannot be bypassed, their availability limits kWh output. The average capacity factor for Sherburne 1 during its 29 months of commercial operation (May 1976 through September 1978) was 72.7 percent. The average capacity factor for Sherburne 2 for its 18 months of commercial operation (April 1977 through September 1978) was 78.8 percent. Thus, the station capacity factor was 75.8 percent, which closely corresponds to NSP's capacity estimate of 80 percent for the period from 1976 to 1980. The monthly kWh outputs for both units

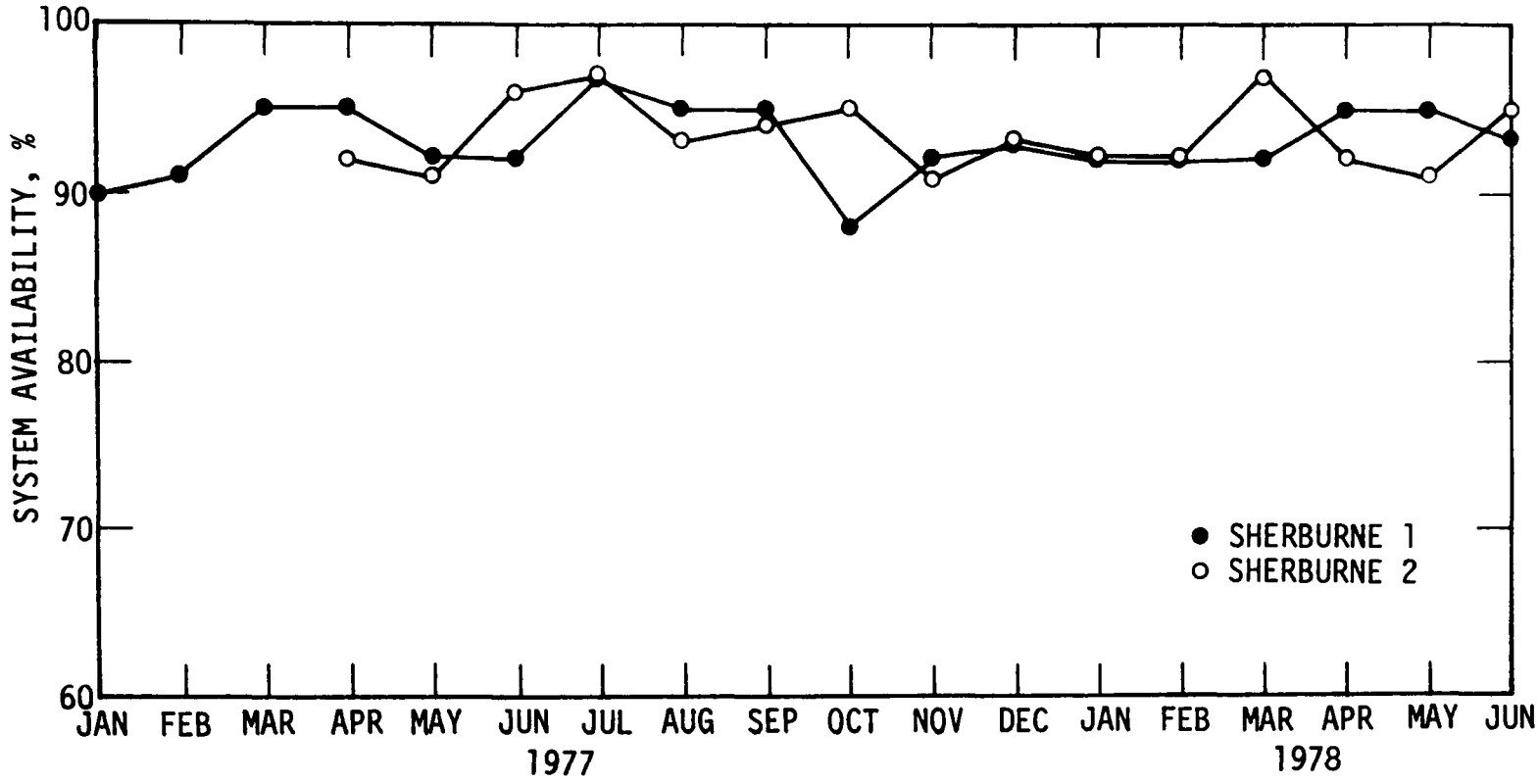

Figure 2-18. Availability history of Sherburne 1 and 2, Northern States Power Company

TABLE 2-17. SHERBURNE 1 PERFORMANCE SUMMARY: MAY 1976 TO SEPTEMBER 1978

Month/year	Unit output MWh	Unit capacity factor	Boiler operation, h	Total FGD system availability, %	Module operability, %											
					101	102	103	104	105	106	107	108	109	110	111	112
May 1976	318,050	0.64	657	86	62	83	81	59	72	90	57	69	60	75	72	67
Jun. 1976	372,450	0.75	688	84												
Jul. 1976	269,700	0.54	512	84	80	62	71	81	80	68	81	75	79	63	91	69
Aug. 1976	421,110	0.85	705	94	46	93	51	84	83	76	71	84	81	76	87	91
Sep. 1976	349,470	0.70	566	95	87	90	93	76	76	79	85	79	85	80	92	96
Oct. 1976	385,610	0.68	606	93	97	84	96	96	95	30	74	76	91	81	100	87
Nov. 1976	470,820	0.95	720	93	83	80	87	79	92	80	93	89	69	78	73	93
Dec. 1976	480,920	0.97	722	95	88	84	87	80	71	97	91	95	94	88	73	75
Average	383,220	0.77	647	90	78	82	81	79	81	74	79	81	80	77	84	83
Jan. 1977	386,060	0.78	607	90	94	75	99	76	96	77	70	92	81	40	75	95
Feb. 1977	395,210	0.80	609	91	89	99	64	96	64	99	81	62	98	93	98	61
Mar. 1977	510,650	1.0	743	95	47	92	95	93	93	95	88	93	95	83	78	72
Apr. 1977	460,100	0.93	718	95	84	65	92	95	96	62	73	91	58	93	90	88
May 1977	195,790	0.39	312	92	96	48	92	87	95	96	81	98	96	78	35	87
Jun. 1977	127,290	0.26	248	92	76	77	75	75	30	87	58	44	61	80	0	83
Jul. 1977	476,490	0.96	736	97	93	66	92	90	92	94	91	17	94	83	78	83
Aug. 1977	357,380	0.72	640	95	85	89	66	55	81	90	83	79	72	85	90	66
Sep. 1977	416,430	0.84	686	95	86	85	88	92	88	62	83	90	86	77	77	82

TABLE 2-17 (continued)

Month/year	Unit output, MWh	Unit capacity factor	Boiler operation, h	Total system availability, %	Module operability, %											
					101	102	103	104	105	106	107	108	109	110	111	112
Oct. 1977	360,850	0.73	609	88	70	81	95	97	63	35	87	99	96	39	58	96
Nov. 1977	412,360	0.83	705	92	77	91	42	86	79	82	87	91	89	89	92	52
Dec. 1977	325,050	0.65	557	93	97	90	95	94	71	92	26	67	96	98	95	90
Average	368,640	0.74	598	93	83	80	83	86	79	88	76	77	85	78	72	80
Jan. 1978	374,290	0.75	648	92	83	63	88	73	84	84	92	64	91	80	88	82
Feb. 1978	366,200	0.74	636	92	0	93	92	89	74	85	89	88	76	86	88	87
Mar. 1978	423,220	0.85	676	92	71	83	64	89	90	83	62	89	97	71	79	90
Apr. 1978	464,520	0.94	713	95	92	87	87	44	81	85	91	86	92	91	87	52
May 1978	380,010	0.77	635	95	61	86	85	86	89	64	62	83	82	71	87	79
Jun. 1978	414,670	0.84	717	93	50	84	85	85	62	78	55	8[illegible]	88	82	72	95
Jul. 1978	394,510	0.79	694	95	82	76	71	74	75	52	75	63	62	72	66	73
Aug. 1978	416,930	0.84	742	91	64	65	73	63	65	80	81	73	63	73	64	83
Sep. 1978	185,740	0.37	357	97	89	62	77	77	58	82	68	68	80	80	55	75
Average	380,010	0.77	646	94	66	78	80	76	75	77	75	87	81	78	76	80

TABLE 2-18. SHERBURNE 1 PERFORMANCE SUMMARY FROM OCTOBER 1977 TO SEPTEMBER 1978

Month/year	Unit output, MWh	Unit capacity factor	Boiler operation, h	Total system availability, %	Module operability, %											
					101	102	103	104	105	106	107	108	109	110	111	112
Oct. 1977	360,850	0.73	609	88	70	81	95	97	63	35	87	99	96	39	58	96
Nov. 1977	412,360	0.83	705	92	77	91	42	86	79	82	87	91	89	89	92	52
Dec. 1977	325,050	0.65	557	93	97	90	95	94	71	92	26	67	96	98	95	90
Jan. 1978	374,290	0.75	648	92	83	63	88	73	84	84	92	64	91	80	88	82
Feb. 1978	366,200	0.74	636	92	0	93	92	89	74	85	89	88	76	86	88	87
Mar. 1978	423,220	0.85	676	92	71	83	64	89	90	83	62	89	97	71	79	90
Apr. 1978	464,520	0.94	713	95	92	87	87	44	81	85	91	86	92	91	87	52
May 1978	380,010	0.77	635	95	61	86	85	86	89	64	62	83	82	71	87	79
Jun. 1978	414,670	0.84	717	93	50	84	85	85	62	78	55	83	88	82	72	95
Jul. 1978	394,510	0.79	694	95	82	76	71	74	75	52	75	63	62	72	66	73
Aug. 1978	416,930	0.84	742	91	64	65	73	63	65	80	81	73	63	73	64	83
Sep. 1978	185,740	0.37	357	97	89	62	77	77	58	82	68	68	80	80	55	75
Average	341,310	0.76	641	93	70	80	80	80	74	75	73	80	84	78	78	80

TABLE 2-19. SHERBURNE 2 PERFORMANCE SUMMARY FROM APRIL 1977 TO SEPTEMBER 1978

Month/year	Unit output, MWh	Unit capacity factor	Boiler operation, h	Total system availability, %	Module operability, %											
					201	202	203	204	205	206	207	208	209	210	211	212
Apr. 1977	442,170	0.89	697	92	0	95	93	87	83	84	94	74	91	87	85	86
May 1977	421,020	0.85	644	91	33	100	44	95	94	100	76	98	94	92	91	98
Jun. 1977	423,680	0.85	720	96	92	76	78	79	89	74	67	88	88	78	45	85
Jul. 1977	482,890	0.77	602	97	96	87	86	97	96	88	88	95	57	93	94	87
Aug. 1977	366,500	0.74	675	93	88	75	67	82	84	35	81	80	56	79	71	33
Sep. 1977	423,280	0.85	717	94	89	61	82	90	81	82	52	88	56	87	73	86
Oct. 1977	449,140	0.90	684	95	98	89	87	86	62	99	98	93	96	96	70	81
Nov. 1977	435,360	0.88	715	91	85	93	68	80	93	73	75	66	94	77	91	65
Dec. 1977	443,500	0.89	733	93	53	93	94	81	89	95	93	83	62	82	90	92
Average	420,840	0.85	687	94	70	85	78	86	86	81	80	85	77	86	79	79
Jan. 1978	387,190	0.78	682	92	91	75	64	72	74	67	91	88	77	72	73	84
Feb. 1978	367,080	0.74	620	92	83	85	55	91	89	76	71	89	85	81	97	60
Mar. 1978	483,750	0.97	744	97	82	92	90	83	78	85	91	62	83	78	88	89
Apr. 1978	436,420	0.88	719	92	70	82	90	84	91	83	84	86	78	90	67	85
May 1978	70,070	0.14	120	91	97	94	80	90	90	89	90	92	28	91	78	14
Jun. 1978	326,780	0.66	572	95	77	46	41	67	62	62	72	78	60	62	76	75
Jul. 1978	393,610	0.79	697	95	87	89	62	93	90	64	86	67	64	81	73	71
Aug. 1978	384,400	0.77	695	93	88	100	48	29	81	72	64	87	54	76	80	71
Sep. 1978	369,500	0.80	720	96	72	82	70	61	74	64	82	72	75	78	82	68
Average	360,640	0.73	619	94	83	83	67	74	81	74	81	80	67	79	79	69

TABLE 2-20. SHERBURNE 2 PERFORMANCE SUMMARY FROM OCTOBER 1977 TO SEPTEMBER 1978.

Month/year	Unit output, MWh	Unit capacity factor	Boiler operation, h	Total system availability, %	Module operability, %											
					201	202	203	204	205	206	207	208	209	210	211	212
Oct. 1977	449,140	0.90	684	95	98	89	87	86	62	99	98	93	96	96	70	81
Nov. 1977	435,360	0.88	715	91	83	93	68	80	93	73	75	66	94	77	91	65
Dec. 1977	443,500	0.89	733	93	53	93	94	81	89	95	93	83	62	82	90	92
Jan. 1978	387,190	0.78	682	92	91	75	64	72	74	67	91	88	77	72	73	84
Feb. 1978	367,080	0.74	620	92	83	85	55	91	89	76	71	89	85	81	97	60
Mar. 1978	483,750	0.97	744	97	82	92	90	83	78	85	91	62	83	78	88	89
Apr. 1978	436,420	0.88	719	92	70	82	90	84	91	83	84	86	78	90	67	85
May 1978	70,070	0.14	120	91	97	94	80	90	90	89	90	92	28	91	78	14
Jun. 1978	326,780	0.66	572	95	77	46	41	67	62	62	72	78	60	62	76	75
Jul. 1978	393,610	0.79	697	95	87	89	62	93	90	64	86	67	64	81	73	71
Aug. 1978	384,400	0.77	695	93	88	100	48	29	81	72	64	87	54	76	80	71
Sep. 1978	396,500	0.80	720	96	72	82	70	61	74	64	82	72	75	78	82	68
Average	381,150	0.77	642	94	82	85	71	76	81	77	83	80	71	80	80	71

have tended to increase,* and Sherburne 2's output has tended to exceed that of Sherburne 1. These trends reflect the design and operating experience that has been gained.

Several performance tests and continuous monitoring data have demonstrated that removal efficiencies met the standard emission regulations. Scrubber systems typically remove about 99 percent of the inlet particulate matter [6.9 g/m^3 (3.0 gr/ft^3) inlet, 0.09 g/m^3 (0.04 gr/ft^3) outlet]† and from 55 to 60 percent of the inlet sulfur dioxide (700 ppm inlet, 300 ppm outlet). The only compliance problems have been with opacity requirements. Even when the systems have met or exceeded design particulate control levels, opacity has typically ranged from 40 to 45 percent, which is about twice the regulatory limit.

2.2.2 Domestic Limestone Scrubbing Units: Recently Operational Systems

2.2.2.1 Arizona Public Service, Cholla 1 and 2[9-12]--

The Cholla Steam Electric Station of Arizona Public Service is located in an arid desert region of Navajo County, Arizona, near Joseph City. The area surrounding the station is relatively flat and sparsely populated. There are no other major industries in the area.

Cholla now operates only two of the five planned steam turbine generating units. Both Cholla 1 and 2 have wet bottom, pulverized coal-fired steam generators supplied by Combustion Engineering. Cholla 1 is a 115-MW (net) unit and was put in commercial service in May 1962. Cholla 2 is a 250-MW (net) unit that began operation in June 1978, but as of October 1978 had not yet been declared commercial.

Arizona Public Service is increasing the station's capacity from the current 365 MW (net) to 1315 MW (net). Units 3 and 4, now under construction, are scheduled for commercial startup in June 1979 and June 1980 and are rated at 250 and 350 MW (net),

---

* Sherburne 2's monthly output dropped off for the first three quarters of 1978 because of outages and overhaul.

† Dry basis.

respectively. Unit 5, now in the planning stage, is scheduled for commercial startup in June 1983. Like Cholla 1 and 2, Cholla 3, 4, and 5 will consist of pulverized-coal-fired units supplied by Combustion Engineering.

The plant burns low-sulfur subbituminous coal shipped by rail from the McKinley Mine near Gallup, New Mexico. A typical analysis of this coal shows the heating value to be 24,190 kJ/kg (10,400 Btu/lb), the sulfur content to be 0.5 percent, the chloride content to be 0.025 percent, the ash content to be 13.5 percent, and the moisture content to be 15 percent.

Cholla 1 is equipped with mechanical collectors upstream from the FGD system.

A Research Cottrell FGD system was retrofitted on Cholla 1 and began operation in October 1973.

Current emission regulations require that three of the other four units at Cholla be equipped with FGD systems. Arizona Public Service consequently awarded two separate contracts to Research Cottrell for limestone slurry FGD systems on Units 2 and 4. Unit 3 will include only an ESP for the control of particulate emissions. The emission control strategy for Unit 5 has not yet been determined.

Cholla 2 consists of four modules for the control of particulate and sulfur dioxide. The FGD system can handle 100 percent of the flue gas and started operation simultaneously with the boiler in June 1978. Cholla 3, an identical 250-MW (net) unit, is scheduled to go on line in June 1980. Tables 2-21 and 2-22 summarize FGD system data for Cholla 1 and 2.

Pollution control--Cholla 1 is equipped with mechanical collectors upstream from the FGD systems. The mechanical collectors, Research Cottrell multicyclones, are designed to remove 80 percent of the inlet particulate matter. If the design efficiency is achieved, loading at the outlet of the mechanical collectors should be approximately 2.2 g/m^3 (2.0 gr/ft^3).

The FGD system on Cholla 1 consists of two modules, A and B. Each module includes a 316L stainless steel flooded-disc venturi

TABLE 2-21. FGD SYSTEMS DATA FOR CHOLLA 1, JOSEPH CITY, ARIZONA

Unit rating (gross), MW	119
(net), MW	115
Fuel	Subbituminous coal
Average fuel characteristics:	
Heating value, kJ/kg (Btu/lb)	23,609 (10,150)
Ash, %	13.5
Moisture, %	15.0
Sulfur, %	0.5
Chloride, %	0.025
FGD process	Limestone slurry
FGD system supplier	Research Cottrell
Application	Retrofit
Status	
Startup date:	
Initial	October 1973
Commercial	December 1973
Design removal efficiency:	
Particulate, %	99.7
Sulfur dioxide,[a] %	58.5
Actual removal efficiency:	
Particulate, %	99.7
Sulfur dioxide,[a] %	50-60
Water loop	Open
Total water makeup, liter/s per net MW[b]	0.066
(gal/min per net MW)	(1.04)
Sludge disposal	Unstabilized sludge disposed of in an onsite unlined pond

[a] Sulfur dioxide removal efficiencies represent the overall efficiency. The utility has no scrubber bypass.
[b] Net MW.

TABLE 2-22. FGD SYSTEMS DATA FOR CHOLLA 2, JOSEPH CITY, ARIZONA

Unit rating (gross), MW (net), MW	250
Fuel	Subbituminous coal
Average fuel characteristics:	
Heating value, kJ/kg (Btu/lb)	23,609 (10,150)
Ash, %	13.5
Moisture, %	15.0
Sulfur, %	0.5
Chloride, %	0.025
FGD process	Limestone slurry
FGD system supplier	Research Cottrell
Application	New
Status	
Startup date:	
Initial	June 1978
Commercial	
Design removal efficiency:	
Particulate, %	99.7
Sulfur dioxide,[a] %	75.0
Actual removal efficiency:	
Particulate, %	
Sulfur dioxide, %	
Water loop	Open
Total water makeup,	
liter/s per net MW	0.066
(gal/min per net MW)	(1.04)
Sludge disposal	Unstabilized sludge disposed of in an onsite unlined pond

[a] Sulfur dioxide removal efficiencies represent the overall efficiency. The utility has no scrubber bypass.

scrubber, a cyclonic mist eliminator, an absorber tower constructed of 316L stainless steel, and a final mist eliminator. The absorber on Module A includes packing for removal of the sulfur dioxide with circulating limestone slurry. The absorber tower in Module B is a hollow spray tower, and limestone slurry is not circulated through it. Each module treats approximately one-half of the total boiler flue gas. The entire FGD system is designed to treat 227 m^3/s (480,000 acfm) of flue gas at 136°C (276°F). Actual boiler flue gas flow to both modules (at 115-MW generating capacity) measures approximately 189 m^3/s (400,000 acfm). In addition, bypass leakage around the FGD system amounts to 8 m^3/s (17,000 acfm).

The sulfur dioxide absorber in Module A includes a fixed plate and conical hat separator and packing. The fixed plate and conical hat separator are constructed of 316L stainless steel. The Munters packing, which consists of a fixed matrix of rigid sheets of polypropylene, has a high specific surface area and low pressure drop of only 0.12 kPa (0.5 in. H_2O). The superficial gas velocity of the sulfur dioxide absorber is 2.1 m/s (6.9 ft/s), and the L/G ratio is 6.5 liters/m^3 (48.9 gal/10^3 ft^3).

The mist eliminators in each absorber tower are arranged horizontally in two stages. The first stage is a chevron-type, two-pass, polypropylene mist eliminator, located approximately 3.7 to 4.6 m (12 to 15 ft) above the absorber packing. The design configuration of the second-stage, four-pass, polypropylene mist eliminator differs only slightly from that of the first stage. The distance between stages is approximately 1.2 m (4 ft). Vane spacing is 3.8 cm (1.5 in.) in the first stage and 18.1 cm (8.1 in.) in the second stage. On each tower, both stages of the mist eliminator are washed on a timed cycle with makeup water from plant wells. The quadrants of each mist eliminator stage are sprayed sequentially for 45 seconds every 30 minutes with makeup water at 520 kPa (60 psi). The flow rate of the makeup water to the mist eliminator is approximately 15 liters/s (240 gal/min).

Shell-and-tube heat exchangers in each module raise the temperature of the scrubbed gas from 50°C (122°F) to 72°C (162°F) before it is discharged to the atmosphere. Each reheater consists of two bundles of 316L stainless steel bare tubes with an outside diameter of 2.5 cm (1.0 in.). The heating medium is high pressure steam that is extracted from the boiler stream drum and reduced in pressure from 13.2 MPa (1900 psig) to 1.8 MPa (250 psig). The reheater rating is approximately 84 GJ/h (8 million Btu/h). Reheater steam power requirements are equivalent to approximately 2 MW of electrical capacity. Six steam soot blowers are operated for 5 minutes every 8 hours (once per shift) to clean the tubes.

The reheated, scrubbed gases are discharged through carbon steel ducts to the main stack. The ducts from each module enter the stack at points directly opposite each other. The stack shell is constructed of brick-lined concrete.

Cholla 2 controls particulate and sulfur dioxide emissions with a four-module limestone slurry FGD system supplied by Research Cottrell. This new unit has a design particulate removal efficiency of 99.7 percent and a design sulfur dioxide removal efficiency of 75 percent. The four scrubbing trains are arranged in parallel. Each train consists of a packed tower absorber preceded by a flooded-disc scrubber that handles 25 percent of the flue gas (100 percent of the flue gas is scrubbed). The scrubber trains have a 33 percent design capacity, so that the unit is capable of operating at full load with only three trains. At full load, each train can treat 185 m^3/s (392,000 acfm) of flue gas at 50°C (122°F). Cholla 2 includes an inline steam coil reheat system that provides a temperature increase of 22°C (40°F). Spent scrubbing slurry from these open loop FGD systems is disposed of in an onsite, unlined pond. The plant site has no facilities for sludge storage or fixation. Because of the area's light rainfall and the high evaporation rate, wastewater discharge into receiving waters is not a problem. No liquor is recirculated back to the process.

Cholla 1 uses about 5 MW from its gross generating capacity of 126 MW to operate the emission control system. Another 6 MW is required to operate auxiliary unit equipment. Energy requirements for Cholla 2 are not yet available.

FGD system--A simplified process flow diagram of the entire FGD system is shown in Figure 2-19. A simplified process flow diagram of Module A, which provides the primary sulfur dioxide control, is shown in Figure 2-20.

Flue gas from the boiler induced-draft (ID) fans is pressurized by two booster fans to a static pressure of approximately 6.2 kPa (25 in. H_2O) and flows downward through the throat of the venturi-type, flooded-disc particulate scrubber. Limestone slurry flows over the disc and is atomized as it is sheared by the gas stream at the edge of the disc. Slurry is injected tangentially through nozzles on the inside wall of the venturi scrubber shell above the tapered throat. The orifice is formed by the annular space between the circumference of the horizontal disc and the wall of the tapered duct section in the throat. The disc is adjusted within the tapered duct to increase or decrease the area of the orifice. Thus, gas pressure and particulate scrubbing efficiency can be controlled. The saturated, scrubbed flue gas passes through a cyclonic mist eliminator, where solids from collected fly ash, limestone slurry, and reaction products are separated from the gas stream before it enters the absorber. A diagram of a Cholla flooded-disc venturi and cyclonic mist eliminator is provided in Figure 2-20.

Gas from the cyclonic mist eliminator enters the absorber tower near the base. In Module A only, it contacts the limestone slurry on the surface of the wetted film Munters packing, which is 0.6 m (2 ft) thick.

The packed tower section is separated from the cyclonic mist eliminator by a plate containing a conical hat. This arrangement permits the flue gas to leave the cyclonic mist eliminator and enter the packed spray section, but it prevents the spent lime-

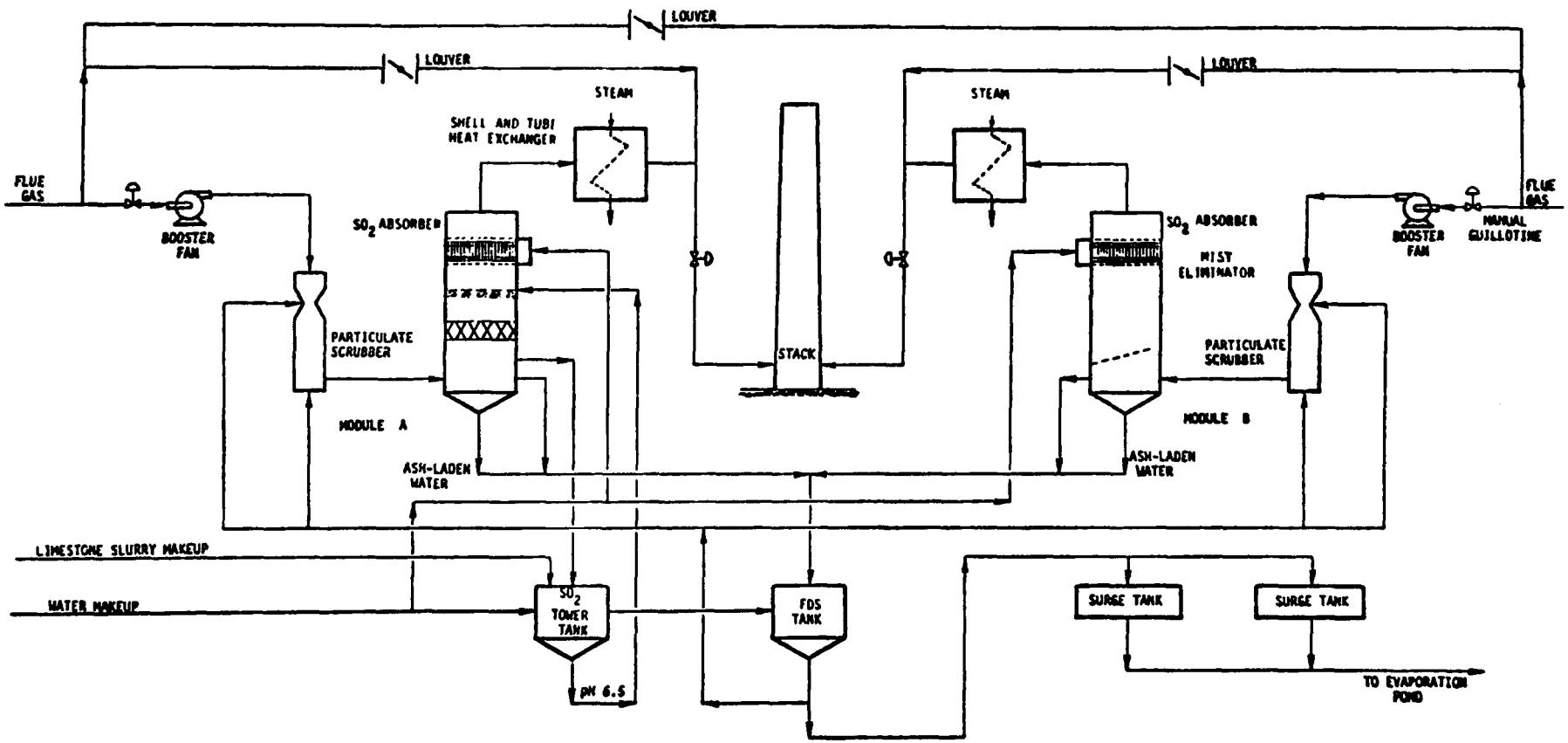

Figure 2-19. Simplified process flow diagram, Cholla 1 FGD system.

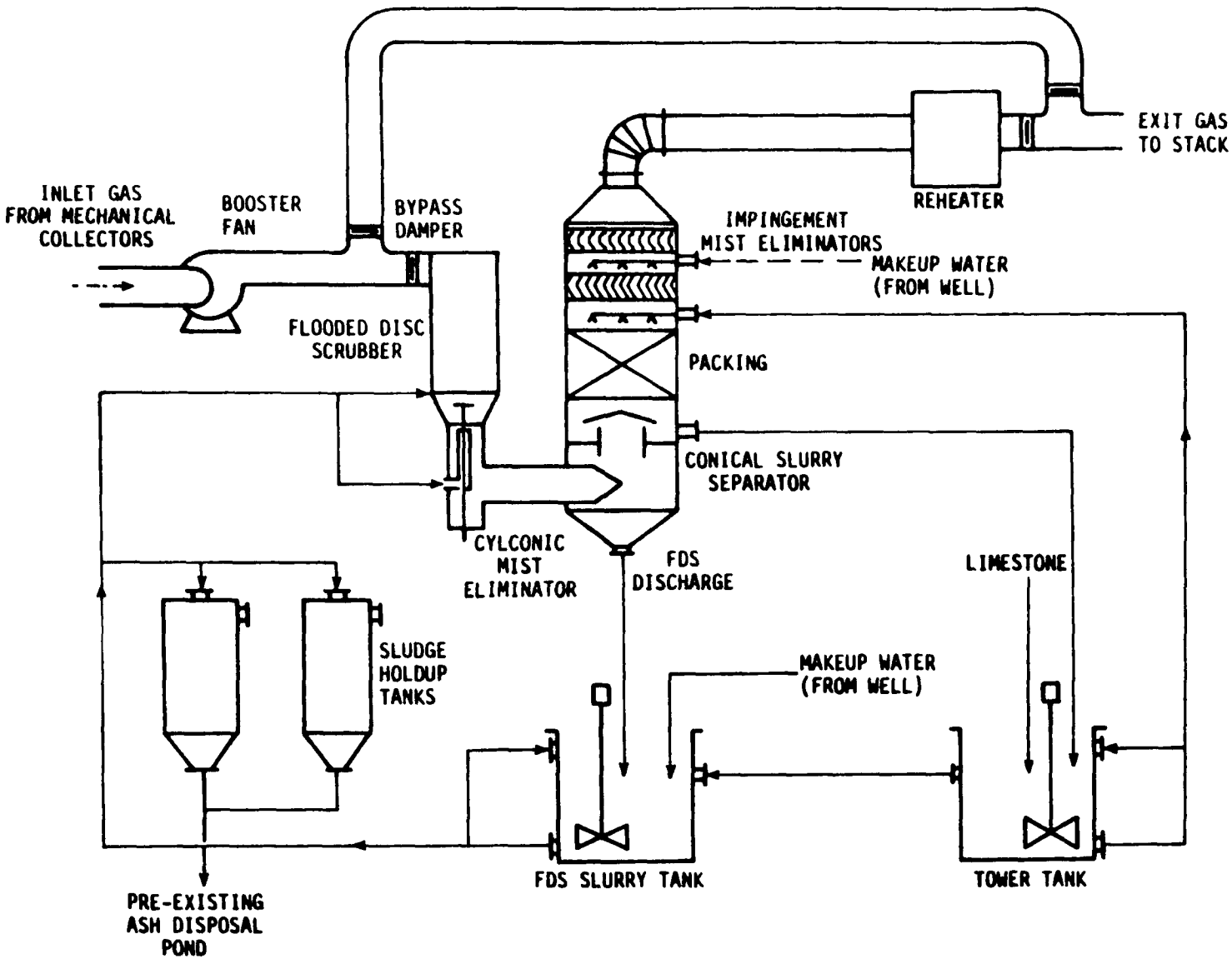

Figure 2-20. Simplified process flow diagram of Module A, Cholla 1 FGD system.

stone slurry in the packed spray section from combining with the spent scrubbing solution in the flooded-disc venturi (see Figure 2-19). Thus, fly ash cannot enter the absorber tower.

The scrubbed gas passes through a set of mist eliminators (one set per absorber) and is reheated before it is discharged to the atmosphere through the main stack. The mist eliminators are of the slat (special baffle design) impingement type; they are constructed of polypropylene and arranged horizontally (vertical gas flow) in two stages. Reheat is provided by a set of steam-heated, shell-and-tube heat exchangers (one set per module). Each set of reheaters contains two bundles of tubes, which raise the temperature of the saturated gas stream from 49°C (120°F) to 71°C (160°F) before it passes through a duct to the brick-lined, concrete stack.

Limestone is added to Module A of the FGD system at approximately 110 percent of the stoichiometric requirement for reaction with the sulfur dioxide in the flue gas. Part of the circulated liquor in the sulfur dioxide absorber is diverted to the flooded-disc scrubber tank (common to both modules) to maintain the pH between 4 and 5 in the particulate control system (flooded-disc venturi). The liquid level in this tank is maintained by pumping the excess spent liquor to one of two surge tanks (sludge holdup tanks) before it is discharged to a pre-existing pond.

Dampers in the FGD system are arranged so that Module B alone or Modules A and B together can be bypassed. Module A alone can only be bypassed for short periods because limestone, which enters the system in the Module A absorber tower tank, is used to keep the operating pH of the entire particulate scrubber system between 4 and 6. The inlets to both modules from the booster fans are connected by a common suction header. Flue gas flow control to both modules is maintained by balancing the module fans through amperage control. Figure 2-19 presents a diagram of the Cholla 1 FGD facility.

Design parameters--The FGD system at Cholla is designed by Research Cottrell to treat 227 m^3/s (480,000 acfm) of flue gas at 136°C (276°F). Actual boiler flue gas flow to both modules (at 115-MW generating capacity) is approximately 189 m^3/s (400,000 acfm). In addition, bypass leakage around the FGD system amounts to 8 m^3/s (17,000 acfm).

The flooded-disc particulate scrubbers are constructed of 316L stainless steel and are 1.8 m (6 ft) in diameter and 13.7 m (45 ft) high. The pressure drop on each is 2.5 kPa (15 in. H_2O). Each scrubber operates with a liquid recirculation rate of about 137 liters/s (2170 gal/min) at full load, which is equal to an L/G ratio of 1.4 liters/m^3 (10.1 gal/10^3 ft^3) at 50°C (122°F). Two-thirds of the scrubbing solution used in the flooded-disc scrubbers is introduced through the hollow shaft of the flooded disc; the remainder is sprayed through tangential nozzles on the vessel wall.

The absorber towers are constructed of 316L stainless steel. They are 6.7 m (22 ft) in diameter and 21.3 m (70 ft) high. The sulfur dioxide absorber in Module A includes a fixed plate and a conical hat separator and packing, which are also constructed of 316L stainless steel.

Limestone milling facilities--Most of the ground limestone for the FGD system is supplied by the Superior Company in Phoenix, Arizona. The grade supplied, known as "red wall" limestone, is at least 75 percent minus 200-mesh. Chemical composition specifications call for a minimum calcium oxide content of 52.5 percent, a guaranteed minimum calcium carbonate content of 95 percent, and maximum magnesium carbonate and silica contents of 0.5 and 1.0 percent, respectively.

The finely ground limestone is stored in an onsite silo from which it is discharged at 9 kg/min (20 lb/min) into a slurry preparation tank at the base of the silo. The fresh limestone slurry is introduced into the FGD system through the sulfur dioxide absorber recirculation tank.

Arizona Public Service is installing a limestone grinding facility on the plant grounds. This facility will be able to meet limestone requirements for Units 1 and 2. It will consist of a ball mill capable of grinding the 0.6-cm (0.25-in.) limestone rock delivered to the plant by rail so that 75 percent is less than 200-mesh.

Modifications--Since startup, the FGD operating procedures have been modified somewhat. The most important changes have occurred in the process control area. The continuous pH sensors were eliminated, and manual wet techniques were adopted once per shift. The original density meters were replaced with nuclear units. The utility has adopted the practice of water purging of plugged sensing lines. The mist eliminator wash system, originally designed to spray each quadrant with service water for 12 seconds every 8 minutes, has been changed to spray each quadrant 45 seconds every 30 minutes.

The only major change in the scrubbing system design that has been incorporated into the Cholla 2 scrubbing system is the use of Inconel 625 in the reheater tubes; 316L stainless steel is used in Cholla 1.

Problems and solutions--Startup and operation of the Cholla 1 FGD system have been accompanied by many problems. An analysis of these problems reveals that most were related to process design rather than process chemistry. The utility operators and the FGD system designer have conceived and implemented solutions to many of these problems. The major problems and solutions are discussed in the following paragraphs.

Scale accumulated on top of and inside the cavity of the shaft's stuffing box in the flooded-disc scrubber. These scale deposits were discovered early enough to prevent binding of the shaft. Modifying the assembly of the stuffing box and reinstalling it in an inverted position (the cavity at the bottom so it cannot accumulate solids) delayed binding. Eventually, however, the shaft did freeze and had to be cleaned out. Other

minor scale accumulations on top of the shaft dome and around the tangential nozzles of the flooded-disc scrubber did not obstruct the flow of limestone slurry or flue gas through the scrubber.

Dilute sulfurous acid condensate caused corrosion in the expansion joints above the reheaters of both FGD modules and on the top row of tubes near the tube sheet on Module B. To prevent recurrence of this corrosion problem, the carbon steel ductwork upstream of the reheaters in the Modules A and B was insulated with a flaked glass liner (Ceilcote); and the Cor-Ten steel expansion joints were replaced with rubber expansion joints. The corroded tube bundle was replaced; and to prevent acid condensate from reaching the new tubes, a trough was installed to divert any condensate from the tube bundles. It is important to note that corrosion of the reheater by sulfurous acid occurred only in Module B (the module without packing), which has a low sulfur dioxide removal efficiency. Presumably, the higher sulfur dioxide removal efficiency of Module A (the packed tower) prevents significant formation of sulfurous acid condensation.

Evidence of chloride attack was noted in the liquid-gas centrifugal separator shell below the absorber. To remedy this problem, Research Cottrell coated the interior of the vessel with an epoxy material; it eroded in spots and had to be repaired. The epoxy material also eroded and disbonded below the scrubber disc. Acid-resistant brick was installed in this lower section of the absorber and has held up for more than six months.

Evidence of additional chloride attack has been noted on Module B reheater tubes, probably because of the chlorides that are introduced in the well water used to prepare makeup slurry. The spray distribution deflector above the flooded disc failed because of stress-corrosion cracking. The deflector was redesigned by Research Cottrell, and the new design is holding up.

Extensive corrosion has recently occurred in the ductwork leading from the Module B absorber tower exhaust elbow to the reheat tube bundle. The utility has recoated the elbow several

times with a Ceilcote liner. An application problem caused repeated failure of the liner. This problem has still not been fully resolved.

Harmonic vibrations occurred in the reheaters. The vibrations were attributed to the vortex effect of an inadequate transition of duct size from the absorber outlet to the reheater shell. To remedy the situation, cross baffles were installed at the reheater entrance. Vibrations also occurred in the Module B booster fan because of uneven scale buildup on the fan blades when the unit was idle. The blades were sandblasted, cleaned, and rebalanced to eliminate these vibrations.

Sediment built up several times in dead spaces in pipelines and valves of idle pumps, as well as in process lines. Buildup occurred when slurry velocities in the pipe were low (during periods of reduced operating rate). This problem was resolved by redesigning some pipes to eliminate potential dead pockets. To prevent valve freezing because of sediment buildup, some valves were repositioned and flushout lines were installed.

Some pipe liners eroded (e.g., in the absorber tower pump inlet piping). The erosion was sometimes caused by unsatisfactory liner materials and sometimes by high flow velocities through pipes and fittings. The rubber lining in some pipes cracked, primarily because of defects in fabrication. Piping modifications helped to reduce the erosion problem.

Burning a lower grade of coal (22 percent ash and 0.7 percent sulfur) in the boiler has been accompanied by some plugging in the mist eliminator and tower packing in Module A. Arizona Public Service has not yet verified whether this plugging is related to the lower grade of coal. If this buildup of material continues, it appears that the life span of the packing and the mist eliminator may be reduced as much as 50 percent.

The FGD system can accommodate the boiler down to a 50-MW load without major problems occurring. Constant flow is maintained in the liquid circuit to prevent solids deposition in the pipelines. A turndown below 50 MW requires that liquid flow be

modulated and increases the probability of solids accumulating in the pipelines because of the reduced liquid flow velocity.

A number of additional minor problems, have been encountered and resolved by normal maintenance and engineering practices. Among these problems are pump failures, expansion joint failures, vessel lining failures (requiring recoating), malfunction of solenoid valves in the mist eliminator wash system, reheater steam leaks, gas damper adjustments, corrosion, erosion, scaling, and liquid leaks in tanks, valves, and pipelines.

Since September 1977, no major design modifications have been necessary at Cholla 1. From October 1977 through September 1978, only routine overhauls and general maintenance have occurred. Scrubbing system problems have involved a recycle pump expansion joint failure and leaks in the flooded-disc scrubber tank header and venturi section. A-side and B-side reliabilities have averaged 96 percent and 95 percent, respectively, since September 1977. Table 2-23 shows the performance history (reliability) of Cholla 1 since January 1974 when the figures became available. Figures 2-21, 2-22, and 2-23 show a graph of the module reliabilities. Because of Cholla 2's recent startup, typical performance information was not available.

Cholla 2 began initial operation in June 1978, and all four scrubbing trains are in service. Cholla 2 has experienced reasonant vibrations in the slurry piping since the unit became operational. Research Cottrell has been injecting nitrogen into the slurry lines to dampen the vibration, but no permanent solution to the problem has yet been found. In addition to the vibration problem, the utility has observed peeling of the corrosion-resistant lining in the downcomer area of one absorber module.

Removal efficiencies for Cholla 1 have been 99.7 percent for particulates and from 50 to 60 percent for sulfur dioxide. Removal efficiencies are not yet available for Cholla 2.

TABLE 2-23. CHOLLA 1 PERFORMANCE SUMMARY JANUARY 1974 TO SEPTEMBER 1978

Month/year	Reliability, %	
	Module A	Module B
January 1974	97	90
Feburary 1974	100	94
March 1974	100	66
April 1974	66	57
May 1974	98	99
June 1974	100	100
July 1974	97	92
August 1974	97	97
September 1974	95	99
October 1974	83	68
November 1974	100	98
December 1974	100	100
Average	94	88
January 1975	98	99
February 1975	96	99
March 1975		
April 1975	88	65
May 1975	48	40
June 1975	100	100
July 1975	97	98
August 1975	95	100
September 1975	98	97
October 1975	84	55
November 1975	100	80
December 1975	100	100
Average	91	85

(continued)

TABLE 2-23 (continued)

Month/year	Reliability, %	
	Module A	Module B
January 1976	99	99
February 1976		
March 1976		
April 1976	99	98
May 1976	76	100
June 1976	64	39
July 1976	100	98
August 1976	100	100
September 1976	100	100
October 1976	56	56
November 1976	96	98
December 1976	98	100
Average	89	89
January 1977	72	93
February 1977	99	99
March 1977	72	93
April 1977	100	100
May 1977	87	87
June 1977	100	100
July 1977	97	99
August 1977	97	99
September 1977	100	100
October 1977	100	100
November 1977	100	98
December 1977	97	91
Average	93	97

(continued)

TABLE 2-23 (continued)

Month/year	Reliability, %	
	Module A	Module B
January 1978	97	91
February 1978	99	88
March 1978	74	74
April 1978	100	100
May 1978	87	98
June 1978	100	100
July 1978	99	100
August 1978	100	95
Average	95	93

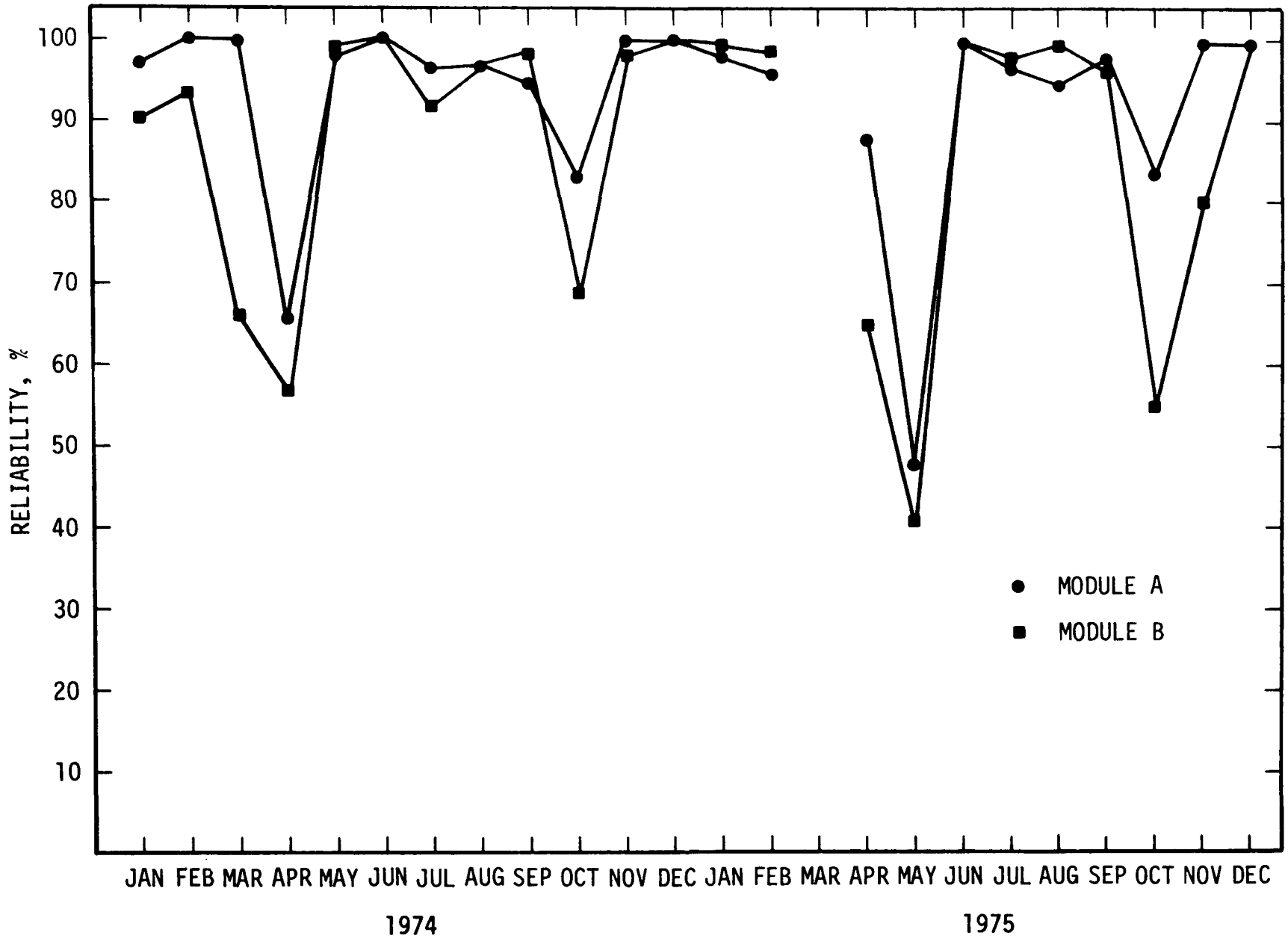

Figure 2-21. Reliability history of Cholla 1, Arizona Public Service, from January 1974 through December 1975.

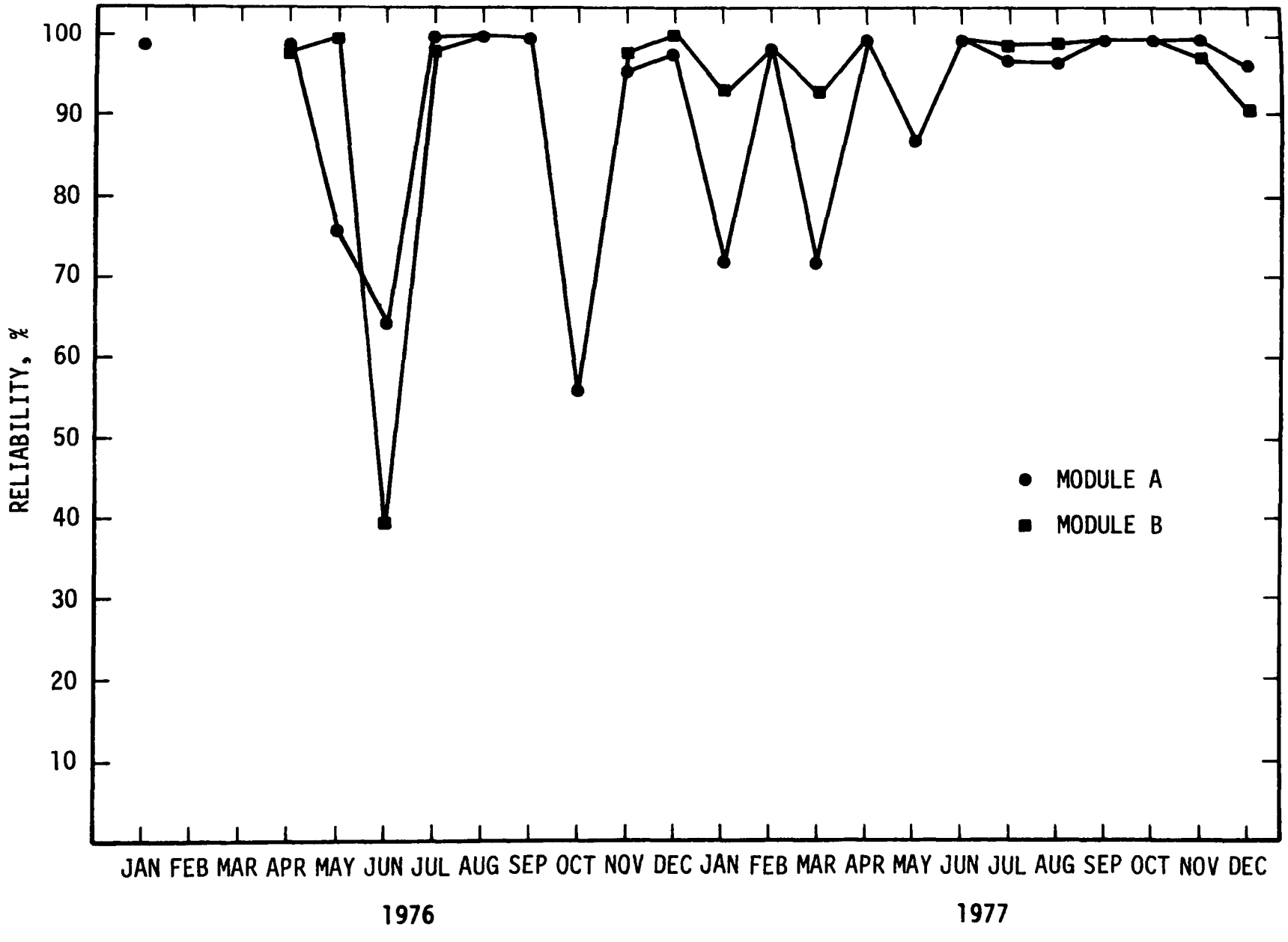

Figure 2-22. Reliability of Cholla 1, Arizona Public Service, from January 1976 through December 1977.

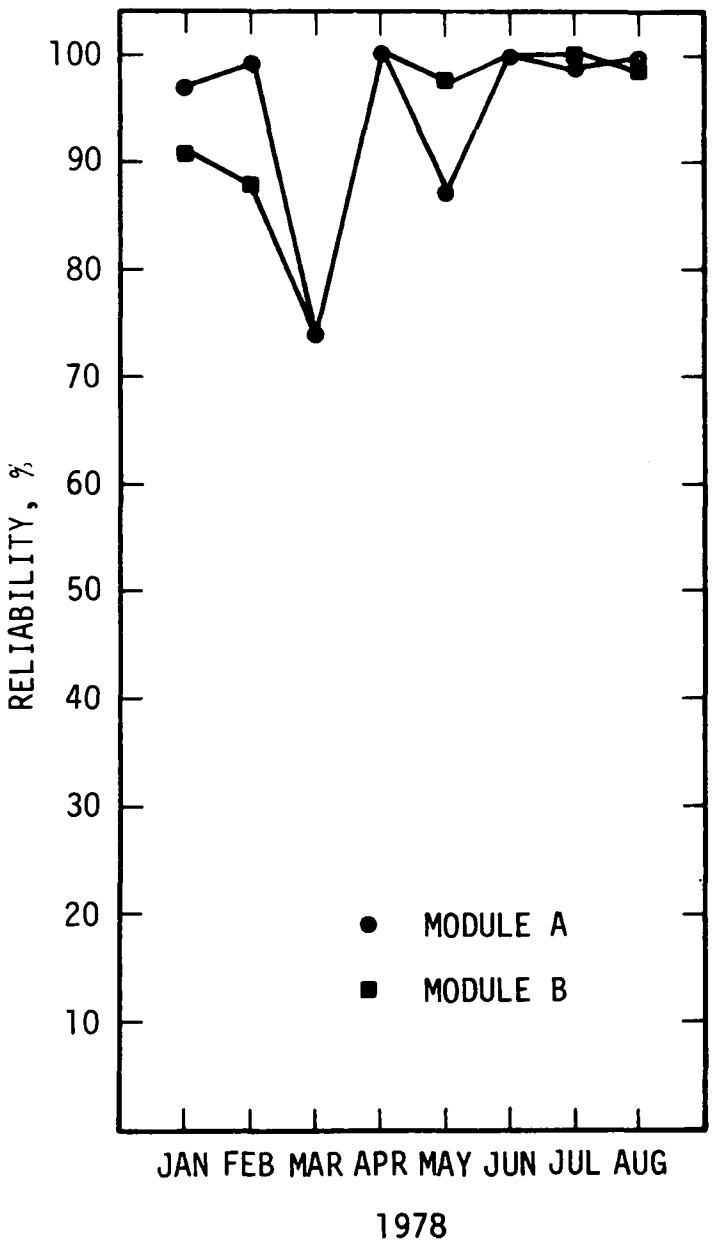

Figure 2-23. Reliability history of Cholla 1, Arizona Public Service, from January through August 1978.

2.2.2.2 Central Illinois Light, Duck Creek 1[13-16]--

Background--The Duck Creek Plant is a new coal-fired power generating station owned and operated by the Central Illinois Light Company (CILCo). The plant is situated in an unreclaimed strip mining area near Carrton, Illinois. The current capacity of the plant is 416 MW (gross), which is provided by one coal-fired power generating unit. The electric power generating facilities at Duck Creek 1 consist of a Riley Stoker pulverized-coal-fired steam generator and associated turbine generator. Duck Creek 1 was placed in commercial service on June 1, 1976.

Duck Creek 1 is designed to fire high-sulfur, bituminous Illinois coal having average sulfur and ash contents of 3.3 and 18.0 percent, respectively. During non-FGD operations, low-sulfur Colorado coal is burned. Three more units of identical capacity are planned for installation at the station. Duck Creek 2, 3, and 4 are scheduled for commercial operation in 1982, 1989, and 1992, respectively, and will bring the total station capacity to 2064 MW (gross).

Primary particulate control is provided by two parallel ESP's designed by Pollution Control-Wather to have a removal efficiency of 99.8 percent. Primary sulfur dioxide (SO_2) control is provided by a Riley Stoker/Environeering limestone slurry FGD system consisting of four parallel modules, each capable of handling 25 percent of capacity. Overall (design) SO_2 removal efficiency is 85.3 percent when burning 4 percent sulfur coal. The modules are vertical, rod-deck, venturi scrubbers. Each module can accommodate 167 m^3/s (353,900 acfm). All or part of the flue gas can be bypassed around the scrubber modules during outages or emergencies by manipulating bypass dampers and module isolation dampers. The bottom ash, fly ash, and scrubbing wastes are disposed of in an onsite 263,000 m^2 (65-acre) sludge pond lined with a natural impermeable material.

Spent scrubbing slurry is bled from the scrubber recirculation lines as a 15 percent solids slurry containing reaction products, unreacted limestone, and collected fly ash. The spent

slurry is transferred to a waste collection tank, where it is combined with liquid waste streams from plant sumps and discharged to the pond. The waste solids present in the spent scrubbing slurry settle in the pond, and the supernatant is returned to the plant for reuse.

Duck Creek 1 uses about 10 MW from its gross generating capacity of 416 MW to operate the FGD facility. Another 6 MW are required to operate auxiliary unit equipment.

Duck Creek 1 data are summarized in Table 2-24.

FGD system--Primary sulfur dioxide control is provided by four parallel, limestone slurry, rod-deck scrubber modules supplied by Riley Stoker/Environeering and designed to remove 85 percent of the inlet sulfur dioxide. The modules are constructed with carbon steel shells, Hastelloy-C internals, and 316L stainless steel rods (all internals are Hastelloy-C or 316L stainless steel). The rod-deck scrubber is a proprietary, second-generation design scrubbing vessel marketed as a Venturi-Sorber Scrubber. The vertical, multistage scrubber provides countercurrent contact between gas and liquid and contains a series of rod decks arranged vertically on staggered centers. The rods in each deck are 2.5 cm (1 in.) in diameter and spaced 2.5 cm (1 in.) apart. Each module is designed to accommodate a flue gas volume of 167 m^3/s (353,900 acfm).

Each scrubber module has a separate set of mist eliminators arranged in a tilted vertical position in the horizontal discharge ducts. The mist eliminators are equipped with a freshwater wash system that consists of a common washdown tank with spray pumps and piping for each mist eliminator. The wash system can of deliver 55 liters/s (885 gal/min) of freshwater to each mist eliminator. The water is sprayed in the second mist eliminator, collected in the washdown tank, and reused in the first mist eliminator.

Figure 2-24 presents a cutaway view of a module. It shows the overall arrangement, as well as the internals.

TABLE 2-24. FGD SYSTEMS DATA FOR DUCK CREEK 1, CANTON, ILLINOIS

Unit rating (gross), MW	416	
(net), MW	400	
Fuel	Bituminous coal	
Average fuel characteristics:[a]		
Source	Illinios	Colorado
Heating value, kJ/kg (Btu/lb)	24,523 (10,543)	24,750 (10,640)
Ash, %	9.12	6.97
Moisture, %	18.0	-
Sulfur, %	3.30	0.41
Chloride, %	0.03	-
FGD process	Limestone slurry	
FGD system supplier	Riley Stoker/Engineering	
Application	New	
Status		
Startup data:[b]		
Initial	July 1976	
Commercial	August 1978	
Design removal efficiency:		
Particulate, %	99.8	
Sulfur dioxide, %	85.3	
Actual removal efficiency:		
Particulate, %		
Sulfur dioxide, %		
Water loop	Open	
Total water makeup,		
liter/s per net MW	0.094	
(gal/min per net MW)	1.49	
Sludge disposal	Unstabilized sludge disposed of in an onsite lined pond	

[a] Design fuel specifications for high-sulfur Illinois coal.

[b] Boiler and ESP commercial operation in June 1976. One FGD module commenced operation in July 1976; full commercial operation with all four FGD modules commenced in August 1978.

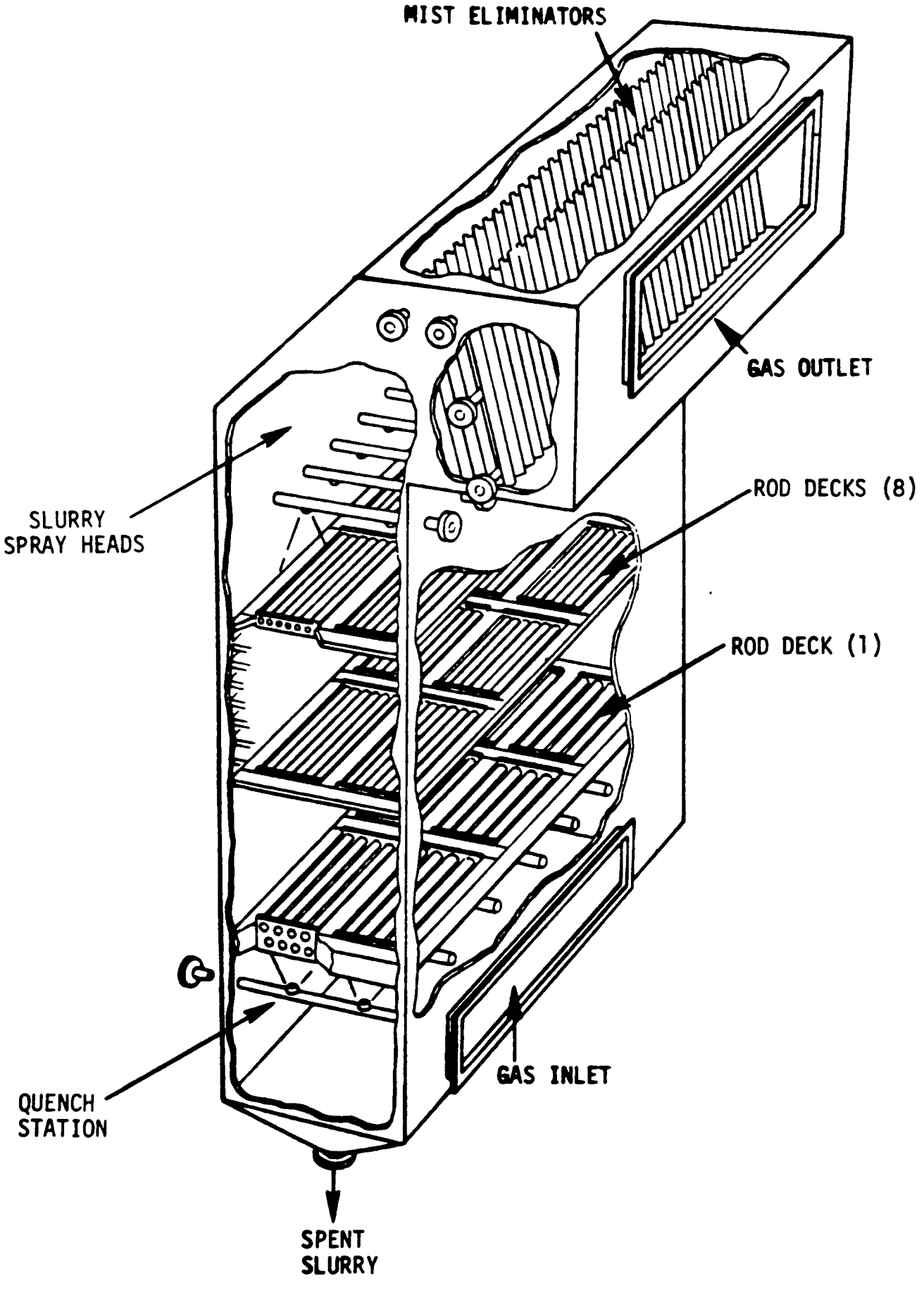

Figure 2-24. Cutaway view of a Duck Creek 1 FGD scrubber module.

A reheat system is not included in the FGD system design. The stack is protected from the acidic effects of the saturated gas by an acid-resistant liner. The "wet stack" is 150 m (500 ft) tall and contains a Cor-Ten steel flue lined with flaked glass. Four bottom hoppers are included in the stack for collection of moisture and slurry droplets that fall out of the flue gas.

Limestone arriving at the plant is delivered to the dead storage area, the live storage area, or the limestone grinder building. The dead storage area holds a 90-day supply; and the live storage area, a 3-day supply. Limestone delivered to the grinder building is stored in a feed bin having a 24-hour capacity.

The limestone delivered to the storage bin is 1.9 cm (3/4 in.) and must be ground so that 90 percent of it is less than 200 mesh. Grinding occurs at 10 kg/s (40 tons/h) in one of two (one operational, one spare) wet ball mills to which the stone is supplied by a weigh feeder. Fresh makeup water is fed to the ball mill at 14 liters/s (220 gal/min) under maximum conditions (100 percent boiler load, 4 percent sulfur coal). The milled limestone is discharged to a slurry tank for collection and pumped to a slurry storage tank through a classifier to insure that the proper particle size has been achieved. The effluent from the mill system is a 40 percent solids slurry; it is retained in the slurry storage tank for 100 minutes before it is added to the liquid scrubbing circuit through the scrubber recirculation tanks.

Process description-Flue gas exits the boiler at 1,140 m^3/s (2,415,000 acfm) and 446°C (835°F) and passes through half-size air preheaters. The flue gas then enters two Pollution Control-Walther ESP's connected in parallel; each ESP treats 50 percent of the total gas flow. The ESP's are designed to remove 99.8 percent of inlet particulates when the inlet gas loading is 14.5 mg/m^3 (6.34 gr/ft^3). The gas is discharged from the ESP's at 717 m^3/s (1,520,000 acfm) and 135°C (275°F) and enters a manifold

supplying four induced-draft fans. These fans, which overcome draft loss in the boiler as well as the ESP's and FGD system, are connected in parallel to a common duct that distributes the gas to each scrubber module in the FGD system or to the bypass duct.

Flue gas enters the base of each scrubber module, where it is quenched to adiabatic saturation conditions. The quenched gas flows upward through nine successive stages of rod decks, where contact is made with the scrubbing slurry in a countercurrent fashion. The scrubbing slurry sprayed from the top of each module flows downward through the rod decks. The rod decks provide sites for intimate contact between gas and slurry. They enhance mass transfer of the sulfur dioxide into the liquid phase and thus promote sulfur dioxide removal. The design rate of gas inlet to the scrubbing system is 668 m^3/s (1,415,600 acfm) at 135°C (275°F). The design rate of gas outlet from the system is 572 m^3/s (1,211,000 acfm) at 53°C (127°F).

The cleaned, saturated gas stream in each module exits the spray zone and turns 90 degrees to pass through a horizontal mist elimination section. Entrained droplets of moisture and slurry are removed from the gas stream by two stages of chevron-type, slanted vertical mist eliminators located in the horizontal discharge duct of each module. Scrubbed, saturated gas exits the FGD system and enters the 150-m (500-ft) "wet stack" through the breeching section.

Figure 2-25 shows the Duck Creek 1 FGD system scrubbing circuit for a given module. Figure 2-26 is a simplified process flow diagram of the Duck Creek 1 power plant and emission control system.

Performance--CILCo initially installed only one of the four scrubber modules at Duck Creek 1 in order to evaluate its effectiveness on high-sulfur coal before proceeding with the design, installation, and operation of the remaining scrubber modules.

The first scrubber module (D-scrubber) was completed in June 1976 and placed in service on July 1, 1976. It operated inter-

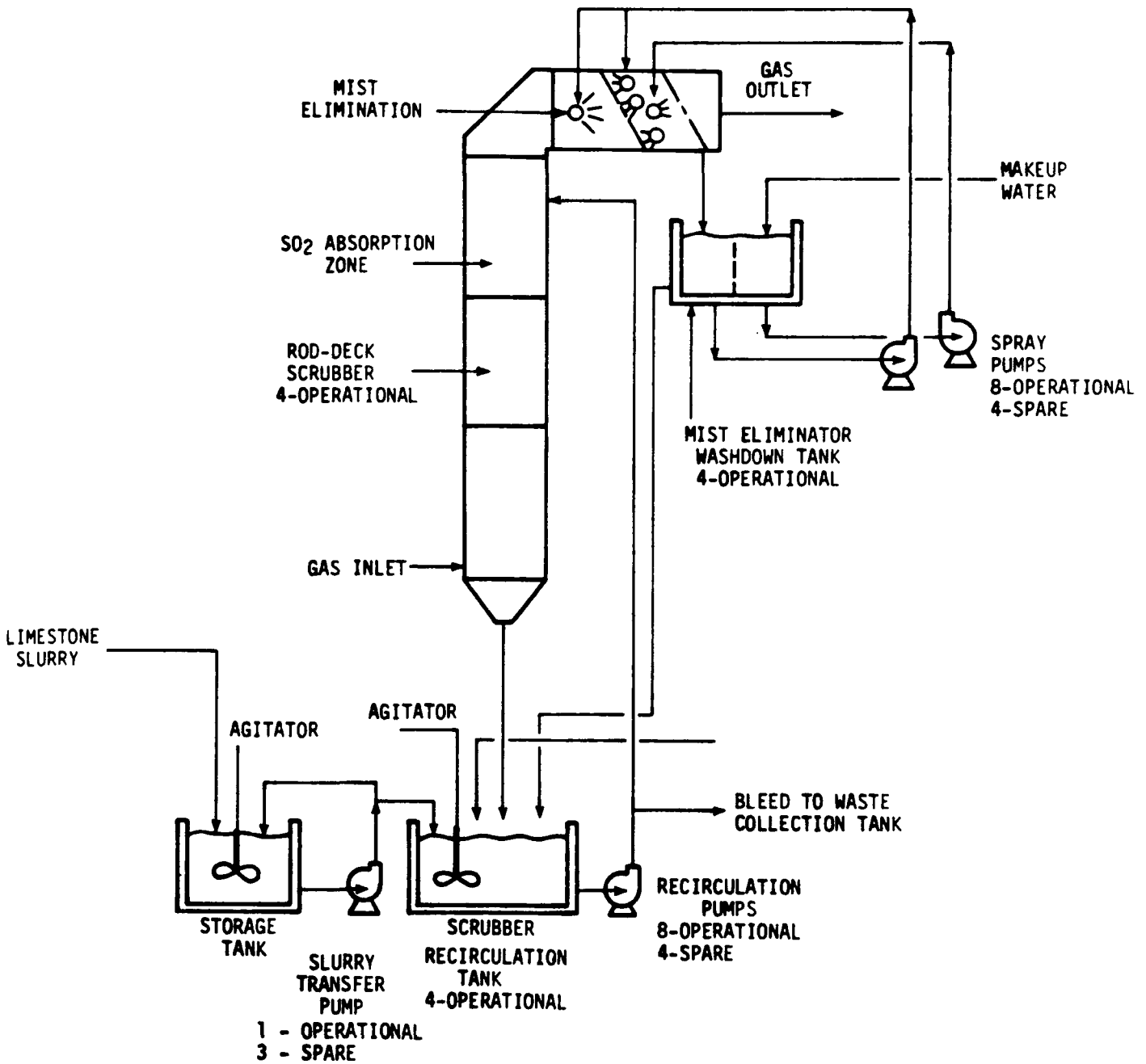

Figure 2-25. Duck Creek 1 FGD system scrubbing circuit.

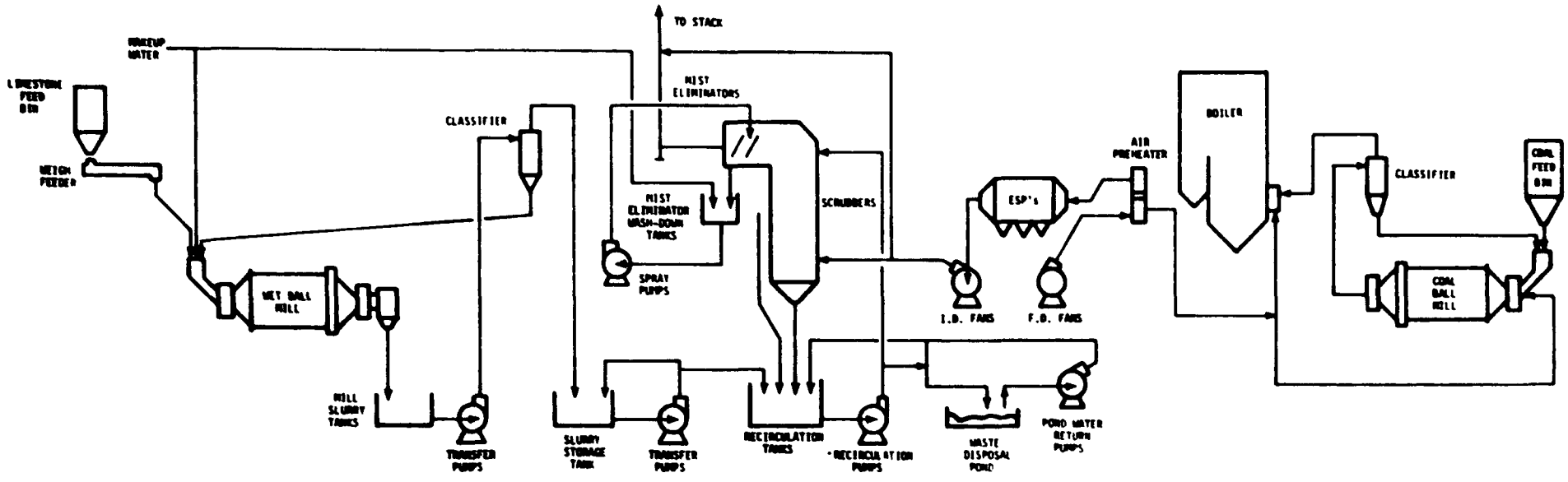

Figure 2-26. Simplified process flow diagram of Duck Creek 1 power plant and emission control system.

mittently throughout the fall and winter and for approximately 1 month in the spring of 1977. The purpose of this operation was to verify process chemistry and design. During this period of service, several problems that made subsequent design modifications necessary became apparent. The modifications made included revamping the mist eliminator piping and wash system, revamping the slurry circulation system, replacing natural rubber lining with neoprene, modifying values and flush/drain systems, and providing additional mixers for greater agitation. The remaining modules were installed between April 1977 and July 1978. During this time, the utility burned low-sulfur coal to meet the sulfur dioxide emission standard of 516 ng/J (1.2 lb/10^6 Btu). Initial startup of the entire FGD system commenced on July 23, 1978.

Because the Duck Creek 1 FGD system has only recently attained commercial operating status, operating data are limited. However, the data obtained during the D-scrubber test (removal efficiencies, problems, solutions, and necessary design modifications) are discussed in the remainder of this section.

Duck Creek 1 commenced commercial operation on June 1, 1976. D-scrubber was initially placed in the flue gas path on July 1, 1976. Limited operation during the balance of July and August was caused primarily by such construction defficiencies as bad welds, faulty pipe hangers, and scrubber slurry leaks. D-scrubber was taken out of the gas path to resolve these problems and placed back on September 9. It operated approximately 360 hours (noncontinuously) during the balance of the month and 385 hours (noncontinuously) in October. During the autumn, several major operating problems were encountered, especially sealing massive mist eliminator scale, spray nozzle and pipe plugging, and materials failure. The module remained out of service throughout December 1976 and all of January and February 1977 because of a scheduled 6-month boiler/turbine overhaul. During this outage, a number of modifications were made to the scrubber to correct the operating problems. The unit was placed back in service in mid-march, and D-scrubber operated almost continuously for 350 hours

during the balance of the month. Testing during April and May 1977 was to concentrate on operating the automatic control loops, but was prematurely terminated because of installation difficulties. D-scrubber was taken out of service, although Duck Creek 1 remained in service with the boiler firing low-sulfur Colorado coal. The ESP's remained in service and removed particulates from the flue gas with the aid of sulfur trioxide gas injection. D-scrubber and the other scrubber modules were not placed back in the flue gas until July 23, 1978.

From July through September 1978, the system operated intermittently. Modifications were made to the slurry transfer tank after it was found to be underdesigned. The FGD system had plugging problems caused by coal fines in the slurry (a common unloading and transfer system is used for coal and limestone). By the August-September 1978 period, the FGD system had achieved an average availability of only 46 percent.

Problems and solutions--The interim testing of the D-scrubber module revealed several chemical, mechanical, and design problems and prompted a number of modifications to the system. These problems are discussed briefly in the paragraphs that follow.

Many of the chemical problems that beset the D-scrubber module and ancillary equipment were caused or aggravated by an incomplete instrumentation/control network. The sophisticated automatic control system could not be put in service during the early stage of operation.

Frequently, scaling and plugging occurred in the mist eliminators. Although these problems were attributed primarily to the lack of automatic controls, the wash system was modified to provide more efficient washing. Specifically, the polyvinyl chloride materials used in the washwater piping that feeds water from the washdown tank to the spray nozzles for each mist eliminator stage were replaced with fiber-reinforced plastic. Also, an additional spray header was added to the wash system to provide more thorough rinsing.

Another chemical problem was the widespread corrosion of the Ceilcote 151 flaked glass liner that was sprayed on the Cor-Ten steel stack flue to a thickness of 0.5 mm (20 mils). Inspection of the liner after the D-scrubber test program revealed blistering and acid corrosion, as well as subsequent widespread deterioration of the flue. This problem seemed to stem largely from the intermittent and partial scrubbing load which caused gas conditions to vary widely through the stack. Premature failure of the liner occurred because operating conditions exceeded the design conditions specified for the materials. Two other factors may have contributed to liner failure: the liner material itself (it is no longer offered by the supplier for stack lining applications) and the absence of a reheat system.

The utility has repaired areas where cracked and peeled liner exposed bare metal surface, but information on the success of these repairs is not available. Other U.S. utility FGD systems with wet stacks have also experienced widespread corrosion of liners, flues, and stacks. Such corrosion has required extended outages for repairs and modifications.

Many mechanical problems involved premature pump lining failures and damper leakage. Originally, all the slurry recirculation and transfer pumps were lined with natural rubber; and pump cavitation, which occurred frequently, caused the linings to be stripped from the casings. To correct this problem, CILCo replaced the natural rubber linings in the slurry recirculation pumps with neoprene linings and the linings in the remaining slurry pumps with reinforced natural rubber linings.

The utility also equipped all the slurry pumps with a flush-out system. Because the circulating fluid is a slurry (with 15 percent solids in the recirculation and discharge lines and from 40 to 55 percent solids in the transfer lines), solids settle out when flow is stopped. If they settle out in the pump, the pump impeller and lining can be damaged on startup. Therefore, a flush system was installed to purge the pump with freshwater whenever the system is not in service.

Several design deficiencies were observed to have caused or aggravated the chemical and mechanical problems. These deficiencies are summarized below:

- The ceramic spray nozzles in the scrubber spray heads were originally of the spinner vane type. Repeated plugging of these nozzles prompted replacement with orifices in the flow lines (open pipe arrangement) and splash plates on the top rod deck.

- Much of the mist eliminator fouling was attributed to an unexpected high carryover of slurry solids in the gas stream. These solids were deposited on the mist eliminators, where they caused fouling, increased pressure drops, and inefficient operation. Eventually the scrubber module had to be shut down to clean the mist eliminators. The problem was corrected by modifying the rod decks. This modification increased the pressure drop across the scrubber, reduced the entrainment of slurry solids in the gas stream, and reduced fouling in the mist eliminator.

- Freshwater flush and drain systems were added to all the slurry storage tanks, recirculation tanks, and pipe lines to purge them of solids that settle out during periods of inactivity.

- Erosion of piping valves in the scrubber recirculation lines was eliminated by moving the valves closer to the recirculation tanks. Freshwater flush and drain systems have also helped to extend valve life.

- An improper gas velocity profile in the scrubber contributed to some of the problems. Riley Stoker/Environeering is now attempting to determine the actual profile and necessary corrective action.

- More agitation was added to all the slurry tanks to maintain solids suspension in the slurry circuit, minimize solids settling, and promote reaction chemistry.

Removal efficiency--Because the FGD system has attained its commercial operating status so recently, typical sulfur dioxide removal efficiencies for full-scale operations are not available; however, sulfur dioxide removal efficiency was measured on the D-scrubber module during the interim test. The results (summarized in Table 2-25) indicate that the removal efficiency was 91.6

percent, which exceeds the design maximum guarantee value of 85.3 percent.* This measurement was taken for sulfur dioxide inlet concentrations of 3000 ppm.

TABLE 2-25. RESULTS OF THE D-SCRUBBER MODULE TEST

Gas capacity, m^3/s (acfm)	140 (300,000)
Sulfur dioxide inlet concentration, ppm	3000
Pressure drop, kPa (in. H_2O)	2.2 (8.8)
L/G ratio, liters/m^3 (gas/10^3 ft^3)	2.2 (50)
Sulfur dioxide outlet concentration, ppm	252
Sulfur dioxide removal efficiency, %	91.6

Particulate removal efficiency measurements taken during the D-scrubber test program also suggested that the scrubber was removing as much as 70 percent of the inlet particulate matter after it had passed through the upstream ESP's, even though the scrubber is not designed to provide any particulate removal capability beyond that of the emission control system.† The utility and system supplier indicate that this phenemenon may be attributed to the ionization or agglomeration of the small particles in the upstream ESP's.[15,16]

2.2.2.3 Kansas Power and Light, Lawrence 4 and 5[17-22]--

The Lawrence Energy Center is 625-MW (gross) power generating station owned and operated by the Kansas Power and Light Company and located in Lawrence, Kansas. The station consists of five units, the first of which was built in 1939. Lawrence 1 is a 10-MW turbine powered by extraction steam from Lawrence 5. Lawrence 2 and 3 are oil/gas-fired peaking units rated at 30 and 60 MW, respectively. Lawrence 2 was placed in service in 1950;

* The efficiency guarantee applied to 4 percent sulfur coal.

† The FGD system is guaranteed not to add any particulate loading to the discharge gas stream as measured at the outlet of the ESP's.

and Lawrence 3; in 1956. Lawrence 4 and 5 are multiple-fuel-fired units that now exclusively fire coal and are rated at 125 and 400 MW, respectively. Lawrence 4 was first placed in service in 1959; Lawrence 5, in 1971. The steam generators for Lawrence 4 and 5 are balanced draft, tangentially fired, multiple fuel units supplied by Combustion Engineering. Lawrence 5 produces 1272 Mg (2,805,000 lb) per hour of superheat steam at 540°C (1005°F) and 18.1 MPa (2620 psi).

The coal burned at Lawrence is low-sulfur subbituminous Wyoming coal with a heating value of 23,000 kJ/kg (10,000 Btu/lb). It contains on average 0.5 percent sulfur, 10 percent ash, and 12 percent moisture. Lawrence 4 consumes approximately 45 Mg (50 tons) per hour of coal at full load; and Lawrence 5, approximately 145 Mg (150 tons) per hour.

To meet air emission regulations of the Department of Health and Environment of the State of Kansas and the U.S. EPA, each unit is equipped with a wet limestone scrubbing system consisting of two parallel scrubber modules for the control of particulates and sulfur dioxide. These Combustion Engineering systems represent a second generation design replacement of the limestone furnace injection systems originally installed on these units in 1968 and 1971.

The maximum particulate emission allowed by the regulations of the Department of Health and Environment of the State of Kansas is 43 ng/J (0.1 lb/10^6 Btu) of heat input to the boiler. As measured by the system supplier and utility during performance tests Lawrence 4 emits only 34 ng/J (0.08 lb/10^6 Btu) of heat input to the boiler.

The maximum sulfur dioxide emission allowed by the regulations of the Department of Health and Environment of the State of Kansas is 129 mg/J (0.3 lb/10^6 Btu) of heat input to the boiler. As measured by the system supplier and the utility during performance tests, Lawrence 4 emits from 6.5 to 13 mg/J (0.015 to 0.03 lb/10^6 Btu) of heat input to the boiler.

Lawrence 4 and 5 share a common limestone storage and preparation facility and a common waste disposal facility. Waste solids in the Lawrence 4 slurry circuits are removed from the scrubbing system by a liquid staging, forced oxidation, and thickening. After treatment, the waste stream has a solids content of 35 percent and is conveyed to a network of three disposal ponds. The supernatant from these ponds is returned to the process and blended with thickener overflow in the recirculation tank. Although Lawrence 4 and 5 share the same sludge disposal ponds, Lawrence 5 is not equipped with a liquid staging and thickening system. Spent slurry is forcibly oxidized by air sparging and bled from the system by effluent bleed pumps, which discharge underflow from the reaction tank directly to the ponds. Supernatant is returned to the process and added directly to the reaction tank.

Lawrence 4 uses about 10 MW of its gross generating capacity of 125 MW to operate the emission control systems and auxiliary station equipment; and Lawrence 5, approximately 20 MW of its gross generating capacity of 420 MW.

FGD system data are summarized on Tables 2-26 and 2-27.

FGD system--Lawrence 4 and 5 are equipped with tail end wet limestone scrubbing systems. Each operational scrubbing system consists of two parallel two-stage scrubber modules to control particulates and sulfur dioxide. Every module consists of a rectangular, variable-throat, rod-deck venturi scrubber arranged in series with slurry hold tanks, mist eliminators, inline reheaters, and isolation and bypass dampers. Ducts are provided so that the modules can be bypassed when oil or natural gas is burned in the boilers. Both systems share a common limestone storage and preparation facility and a common waste disposal facility.

The scrubbing systems were designed and supplied by Combustion Engineering. They represent a second-generation design replacement of the limestone furnace injection and tail end scrubbing systems originally installed on these boiler in 1968 and 1971.

TABLE 2-26. FGD SYSTEMS DATA FOR LAWRENCE 4, LAWRENCE, KANSAS

Unit rating (gross), MW	125
(net), MW	115
Fuel	Coal
Average fuel characteristics:	
Heating value, kJ/kg (Btu/lb)	23,000 (10,000)
Ash, %	9.8
Moisture, %	11.8
Sulfur, %	0.55
Chloride, %	
FGD process	Limestone slurry
FGD system supplier	Combustion Engineering
Application	Retrofit
Status	
Startup date:	
Initial[a]	January 1976
Commercial	
Design removal efficiency:	
Particulate, %	98.9
Sulfur dioxide, %	73.0
Actual removal efficiency:	
Particulate, %	99+
Sulfur dioxide, %	96-98
Water loop	Closed
Total water makeup, liter/s per net MW (gal/min per net MW)	
Sludge disposal	Unstabilized sludge disposed of in an onsite unlined pond

[a] Second generation FGD system.

TABLE 2-27. FGD SYSTEMS DATA FOR LAWRENCE 5, LAWRENCE, KANSAS

Unit rating (gross), MW	420
(net), MW	400
Fuel	Coal
Average fuel characteristics:	
Heating value, kJ/kg (Btu/lb)	23,000 (10,000)
Ash, %	9.8
Moisture, %	11.8
Sulfur, %	0.55
Chloride, %	
FGD process	Limestone slurry
FGD system supplier	Consulting Engineering
Application	New
Status	
Startup date:	
Initial[a]	April 1978
Commercial	
Design removal efficiency:	
Particulate, %	98.9
Sulfur dioxide, %	52.0
Actual removal efficiency:	
Particulate, %	
Sulfur dioxide, %	
Water loop	Open
Total water makeup, liter/ per net MW (gal/min per net MW)	
Sludge disposal	Unstabilized sludge disposed of in an onsite unlined pond

[a] Second generation FGD system.

The original limestone furnace injection and tail end scrubbing system was retrofitted on Lawrence 4. It operated from November 1968 until mid-September 1976 and accumulated approximately 27,000 hours of service. The unit was shut down at that time to perform a scheduled turbine overhaul. During the overhaul, construction and erection of the new scrubber modules were completed. The new system went into service in early January 1977.

The original limestone furnace injection and tail end scrubbing system was installed as new equipment on Lawrence 5 and operated from November 1971 until March 20, 1978. Approximately 23,000 hours of service time was accumulated before the unit was shut down to complete the tie-in of the new scrubbing system into the flue gas path. The new scrubber modules were erected directly behind the existing system, which remained in service during construction of the new system. Because the new system was designed to use the existing reaction tank, spray pumps, induced-draft fans, and stack, an outage of 6 weeks was required to complete installation. The new system went into service on April 14, 1978.

The original scrubbing systems installed on Lawrence 4 and 5 were identical in basic design and operation. Each system included facilities for pulverizing limestone and injecting it into the boiler furnace chamber for calcination. The flue gas transported the calcined linestone and fly ash to the scrubber modules for particulate and sulfur dioxide scrubbing. The cleaned gases then passed through mist eliminators, reheaters, and induced-draft fans before being discharged through the stacks to the atmosphere.

The Lawrence 4 scrubbing system consisted of two scrubber modules. The Lawrence 5 scrubbing system was originally equipped with six modules, and two more were added soon after startup. All the modules were identical in size; each was designed to handle approximately 70 m^3/s (150,000 scfm) of flue gas. Each module had a single marble bed of Pyrex glass marbles that were

1.9 cm (0.75 in.) in diameter. The beds were approximately 9 cm (3.5 in.) thick and included overflow pots for drainage of spent slurry into the recirculation tanks.

Each module was also equipped with mist eliminators and reheaters. Two stages of horizontal, chevron-type mist eliminators were situated approximately 1.5 m (4.5 ft) above the marble bed. Four rows of carbon steel finned tube reheat bundles were situated approximately 6.5 m (20 ft) above the second mist eliminator stage. Under the mist eliminators were automatic retractable wash lances that sprayed pond-return water at 1.1 MPa (150 psig) for one hour each day. The reheaters were also equipped with a self-cleaning system in which compressed air between 0.65 and 0.80 MPa (80 and 100 psi) was blown from lances for 3 minutes six times each day.

Each Lawrence 4 module was connected through an induced-draft fan to a separate 36-m (120-ft) carbon steel stack. All eight Lawrence 5 modules were connected through a common duct to a 114-m (375-ft) stack. Originally, all the modules were equipped with bypass ducts and hydraulic seal dampers. Extensive corrosion and plugging necessitated their removal from both modules of Lawrence 4.

The limestone scrubbing systems now in service on Lawrence 4 and 5 are second-generation units that encompass the same general equipment layout. This layout consists of a common limestone storage and preparation facility, two rod-deck venturi scrubbers, two spray tower absorber modules, and a common waste-disposal facility.

Process--Flue gas from the boiler passes through the air heater and is conveyed by new ductwork to two scrubber modules. Each module can handle 50 percent of total capacity and consists of a rectangular, variable-throat, rod-deck venturi scrubber arranged in series with a spray tower absorber. Each module is equipped with reaction tanks, mist eliminators, reheaters, a bypass duct, and bypass and isolation dampers.

Flue gas enters the scrubbers at 190 m^3/s (403,000 acfm) and 138°C (280°F). Each rod-deck venturi scrubber is comprised of a converging gas section and rod section. The converging gas section directs the flue gas downward to the rod-deck section, which consists of two staggered levels of rubber-coated fiber-glass rods. The rod section is 0.9m (3 ft) wide and 7m (23 ft) long. The outer diameter of each rod is 16.8 cm (6.625 in.); the rods are located on 33-cm (13-in.) centers. The vertical spacing between the two rows of rods is regulated automatically according to gas load to insure a constant pressure drop across the rod section.

Limestone slurry is sprayed continuously into the rod-deck scrubber by nonatomizing, fan-type, spray nozzles around the perimeter of the throat area. The rod section provides a site for intimate gas-slurry contact and thus facilitates particulate and sulfur dioxide removal. Spent slurry from the rod section falls into a collection tank located directly below the venturi section. The collection tank has a liquid capacity of 190,000 liters (5,000 gal) and holds slurry approximately 14 minutes for completion of chemical reactions. Slurry is recycled at 227 liters/s (3600 gal/min) from the collection tank to rod-deck scrubber by two slurry recirculation pumps, the one operational, the other spare.

After passing through the rod-deck venturi, the flue gas makes a 90-degree turn and traverses the spray tower approach where the gas makes another 90-degree turn. The saturated, cooled gas enters the spray towers at 165 m^3/s (349,000 acfm) and 552°c (124°F). Additional sulfur dioxide scrubbing occurs as the gas flows upward through the open towers, where it is contacted by slurry through two levels of countercurrent sprays. Each spray level is comprised of four internal spray headers, and each spray header contains four spray nozzles. The first spray level is situated 3 m (10 ft) above the inlet duct; and the second spray level, 3 m (10 ft) above the first spray level.

Spent slurry feeds by gravity into a reaction tank located directly below each spray tower. The reaction tank has a capacity of 262,000 liters (69,200 gal) and holds slurry approximately 10 min. for completion of chemical reactions and dissolution of fresh limestone additive. One pump recycles slurry from the reaction tank to the spray tower at 335 liters/s (5300 gal/min).

Entrained droplets of moisture and slurry picked up by the flue gas stream are removed in a mist elimination section 3 m (10 ft) above the spray zone. Each mist eliminator has an A-frame design and is comprised of a bulk entrainment separator followed by two stages of chevron vanes. Each mist eliminator is equipped with an intermittent, high-pressure wash system which sprays the top of the bulk entrainment separator and bottom of the first mist eliminator stage with blended makeup water.

After the mist eliminators, the saturated gas stream is reheated by inline, hot water, carbon steel reheaters. One reheater is provided for each spray tower, and each reheater consists of four rows of circumferentially finned tubes arranged in a staggered fashion. The heating medium is hot water from the feed water deaerator of the boiler. Two half-track soot blowers, located upstream of the reheaters, are used once every four hours of service to clean the reheaters with compressed air. The reheaters boost the temperature of the gas stream approximately 11°C (20°F). The reheated gas stream flows through the discharge ducts leading to the induced-draft fans and stacks, which discharge the gas to the atmosphere.

The Lawrence 5 scrubbing system closely resembles the Lawrence 4 scrubbing system. Two scrubbing modules, each consisting of a rod-deck scrubber in series with a spray tower absorber, are provided to treat 100 percent of the flue gas from the steam generator. In addition, the system shares the limestone handling and preparation facilities and the sludge disposal ponds used by Lawrence 4. Several major features, however, are different:

- Gas enters the Lawrence 5 scrubbing system at 1858 m^3/s (3,937,000 acfm) and 149°C (300°F). Because the flue gas flow and temperature are greater than those for the Lawrence 4 system, the modules are significantly larger.

- The flue gas is contacted by a single level of sprays in the spray tower.

- A single reaction tank receives the spent slurry from both modules, as well as the fresh limestone slurry introduced into the systems. (Slurry is recycled to the rod-deck scrubber and spray towers of both modules after a 10-minute retention period.)

- Lawrence 5 is not equipped with a thickener or any other dewatering device for separation of solids from liquid prior to disposal.

Figures 2-27 and 2-28 are simplified process flow diagrams for the second generation Lawrence 4 and 5 emission control systems.[17]

Performance history--No lost boiler capacity has been reported at Lawrence 4 since January 1977, when the limestone slurry spray towers began operation. Although availability has been 100 percent, Lawrence 4 experienced some freezing in January 1978 in the thickener underflow discharge piping and consequent clarifier plugging. The freezeup problem continued through March 1978, but FGD operations continued because two fire hoses 7.6 m (3 in.) in diameter were used to pump the underflow solids to the disposal pond. The utility reported no unit outages through the middle of September 1978. The unit was down the last part of September 1978 for a scheduled turbine/boiler outage, and no FGD operations were required. The particulate removal efficiency for Lawrence 4 has exceeded 99 percent, and the sulfur dioxide removal efficiency has reached from 96 to 98 percent. Performance factors (availability, operability, etc.) for Lawrence 4 and 5 are not reported by the utility.

Construction continued into the first quarter of 1978 at Lawrence 5 on the replacement of the original scrubbing system, which continued to operate until March 20, 1978. It was then taken off the line, so that the new system could be tied into the

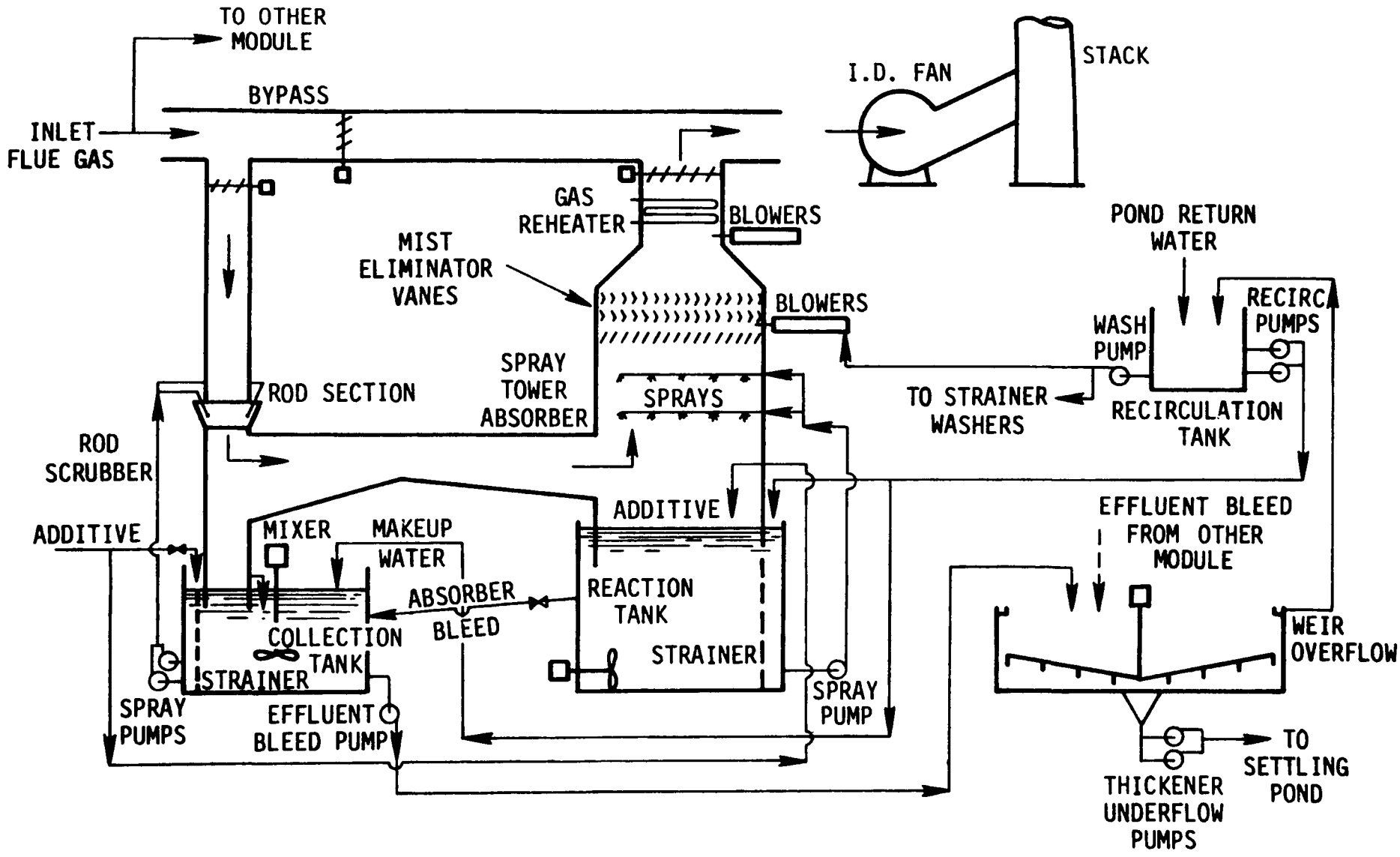

Figure 2-27. Simplified process flow diagram of one of the two Lawrence 4 scrubbing modules.

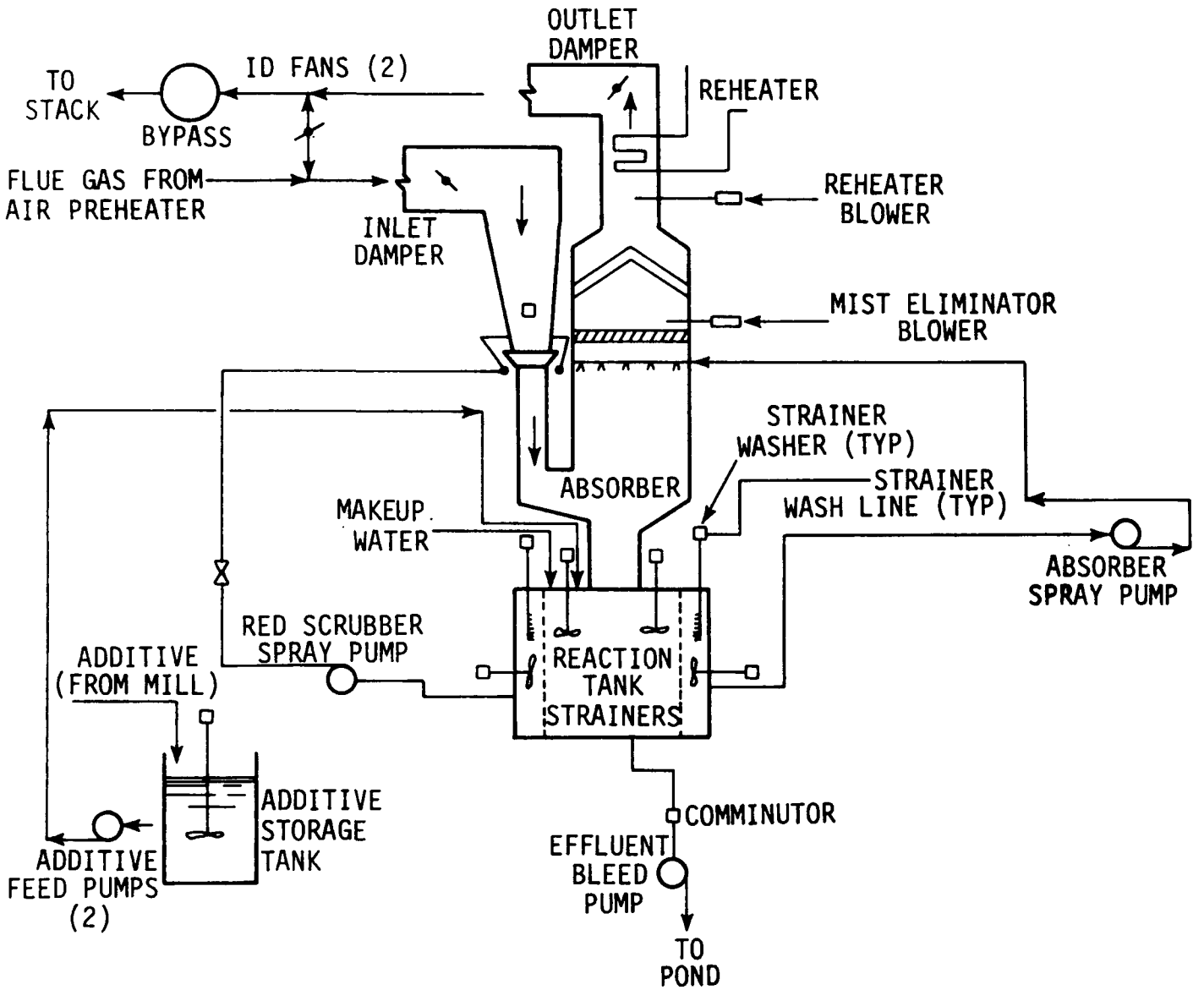

Figure 2-28. Simplified process flow diagram of one of the two Lawrence 5 scrubbing modules.

gas path. The new system began operation on April 14, 1978, and has continued with 100 percent availability; no forced outages have been reported through September 1978. Typical removal efficiencies were not available for Lawrence 5.

2.2.2.4 Springfield City Utilities, Southwest 1[23-27]--

The Southwest Power Station of Springfield City Utilities is a one-unit 173-MW (net) station approximately 8 km (5 mi) southwest of Springfield, Missouri. A second identical unit is planned. Southwest 1 consists of a Riley Stoker pulverized-coal-fired boiler with a 194-MW (gross) turbine generator. Operation began in April 1977, and the unit was declared commercial in September 1977.

The coal burned at this unit is bituminous high-sulfur Kansas coal with a heating value of 29,100 kJ/kg (12,500 Btu/lb). It has a sulfur content of 3.5 percent and an ash content of 13 percent.

A four-field, cold-side ESP designed to be 99.7 percent efficient provides primary particulate control for Southwest 1. A limestone slurry FGD system provides sulfur dioxide control. Both ESP and FGD systems are supplied by the Air Correction Division of Universal Oil Products.

The FGD system consists of two parallel turbulent contact absorber (TCA) modules that scrub 100 percent of the flue gas (50 percent each). Southwest 1 also has facilities for limestone crushing and preparation and sludge handling. One or both FGD modules can be bypassed during an emergency or malfunction by the use of dampers. The sulfur dioxide removal efficiency of the FGD facility is designed to be 80 percent. Cleaned, saturated flue gas is discharged to the atmosphere through the main stack.

Flue gas cleaning wastes are discharged from the recirculation tanks to a thickener, where solids are separated; the clarifier liquor is recycled. Sludge from the thickener underflow is dewatered by a rotary drum vacuum filter; and the filter cake is trucked to an onsite 40,000-m^2 (10-acre) valley landfill.

The Southwest Power Station uses about 9 MW of its gross generating capacity of 194 MW to operate the emission control system. Another 12 MW is required to operate auxiliary station equipment.

FGD systems data are summarized in Table 2-28.

FGD systems--The FGD systems consists of two parallel TCA modules with bypass ducting to allow one or both modules to be bypassed when necessary. Each TCA module contains two stages of packing that now consists of solid rubber balls 3.2 cm (1.25 in.) in diameter. The design does not include a reheat system for the cleaned saturated gas. The gas is ducted directly to a Ceilcote-lined stack.

Process--Flue gas from the steam generator passes through the ESP for particulate removal, and is boosted through the two TCA modules by induced-draft fans. The TCA modules are designed for gas at 314 m^3/s (665,000 acfm) and 149°C (300°F). Flue gas flows into the base of one of the TCA modules, passes through a presaturator, and rises through two levels of packing consisting of solid spheres 3.2 cm (1.25 in.) in diameter; the limestone slurry is contacted in a countercurrent fashion. Each module is equipped with a separate recirculation tank where reactions are completed and fresh slurry is added. Flue gas cleaning wastes are discharged from these tanks. The cleaned saturated flue gas then passes mist eliminators before it is discharged to the atmosphere through the 117-m (384-ft) main stack.

A simplified process flow diagram for Southwest 1 appears in Figure 2-29.

Problems and solutions--Since this unit began operation in April 1977 a number of modifications have taken place. The main ones have been as follows:

- During a shutdown from October 1977 through January 1978, the scrubbing system outlet damper was replaced with 316L stainless steel. The hollow walled plastic spheres having heavier walls. The lining in the scrubber discharge ducts was replaced with a Ceilcote

TABLE 2-28. FGD SYSTEMS DATA FOR SOUTHWEST 1, SPRINGFIELD, MISSOURI

Unit rating (gross), MW	194
(net), MW	173
Fuel	Bituminous coal
Average fuel characteristics:	
Heating value, kJ/kg (Btu/lb)	29,100 (12,500)
Ash, %	13.0
Moisture, %	6.0-12.0
Sulfur, %	3.5
Chloride, %	0.3
FGD process	Limestone slurry
FGD system supplier	Air Correction Division, UOP
Application	New
Status	
Startup date:	
Initial	April 1977
Commercial	September 1977
Design removal efficiency:	
Particulate, %	99.7
Sulfur dioxide, %	80.0
Actual removal efficiency:	
Particulate, %	99.8
Sulfur dioxide, %	92.0
Water loop	Closed
Total water makeup, liter/s per net MW (gal/min per net MW)	
Sludge disposal	Unstabilized sludge dewatered and disposed of in an onsite landfill

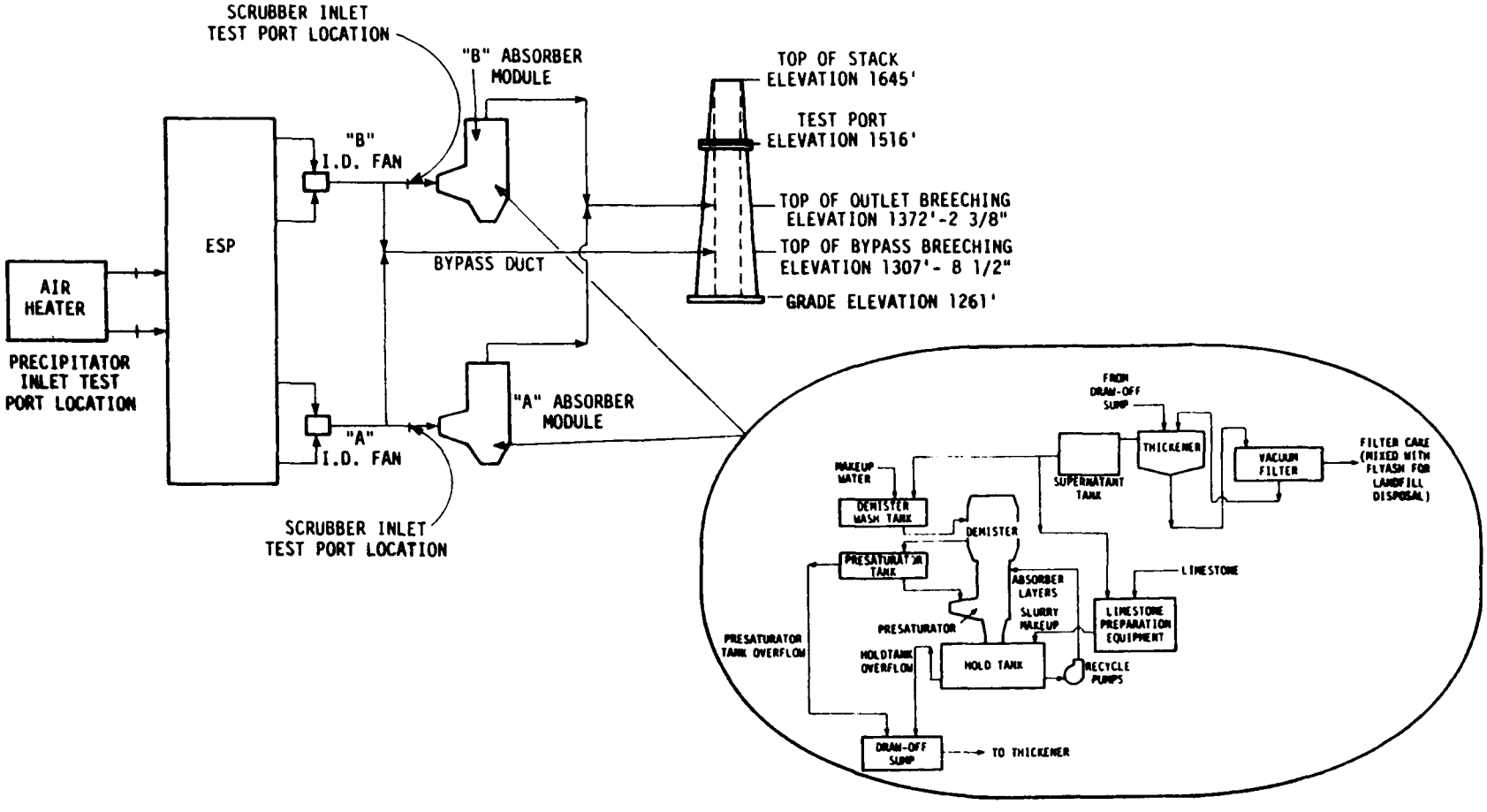

Figure 2-29. Simplified process flow diagram of Southwest 1, Springfield City Utilities.

lining. Insulation was installed around the seal air fan between the inlet dampers, and the presaturators were relined with high-molybdenum steel.

- Between February and March 1978, an expansion joint failed between the induced-draft fan and the B-module absorber. The absorber was bypassed during this period.

- A fiber-reinforced plastic liner failed between April and May 1978. A pump failure and a gas damper rupture also occurred. Thus, only one of the two TCA modules could be operated.

- In June 1978, the mist eliminator wash system was changed from a separate closed loop for each module to a common system for both modules. During June, the FGD facility was plagued with instrumentation problems; and the B-module was inoperable because of the unrectified problem with the expansion joint.

By September 1978, the unit had achieved an average total FGD system availability of only 25 percent. The B-module expansion joint had still not been corrected, and another ball failure in the TCA packing necessitated a replacement of the plastic spheres with solid rubber balls. From July through September 1978, the instrumentation problems were largely rectified, although some slurry line plugging occurred.

A compliance test was conducted on September 14 and 15, 1977. Federal and state emission regulations require that Southwest 1 limit particulate emissions to 43 ng/J (0.1 lb/10^6 Btu) of heat input, sulfur dioxide emissions to 516 ng/J (1.2 lb/10^6 Btu) of heat input, and nitrogen oxide emissions to 301 ng/J (0.7 lb/10^6 Btu) of heat input. The test showed an average ESP inlet dust loading of 3143 ng/J (7.31 lb/10^6 Btu) and outlet loading of 7.91 ng/J (0.0184 lb/10^6 Btu); thus the average ESP efficiency was then 99.75 percent.

The average inlet sulfur dioxide concentration was 2726 ng/J (6.34 lb/10^6 Btu); and the average outlet sulfur dioxide concentration, 226 ng/J (0.556 lb/10^6 Btu). The average sulfur dioxide efficiency was thus 91.7 percent. The average nitrogen oxides emission was 229 ng/J (0.762 lb/10^6 Btu), which was significantly below the emission regulation.

2.2.2.5 Tennessee Valley Authority, Widows Creek 8[28-32]--

Widows Creek Power Station of Tennessee Valley Authority (TVA) is an eight-unit station located near Bridgeport, Alabama. Units 1, 2, 4, 5, and 6 are rated at 140 MW (gross) each. Unit 3 is rated at 150 MW (gross). Units 7 and 8 are rated at 575 and 550 MW (gross), respectively. The total station generating capacity is 1978 MW (gross).

The electric power generating facilities at Widows Creek 8 consist of a Combustion Engineering, tangentially fired balanced-draft, coal-fired steam generator with associated turbine generator. Widows Creek 8 was first placed in service in 1963 and has a net generating capacity of 516 MW.

The coal burned in this unit is bituminous, high-sulfur (3.7 percent) coal with a heating value of 26,200 kJ/kg (11,270 Btu/lb) and an ash content of 17 percent.

A 50 percent (actual) efficient ESP supplied by Koppers provides primary particulate control. Secondary particulate control and primary sulfur dioxide control are provided by a limestone slurry scrubbing system designed and installed by TVA, with the scrubber modules fabricated by Polycon. The unstabilized waste material from the scrubbing operations is disposed of in an onsite unlined pond.

Widows Creek 8 uses about 26 MW of its gross generating capacity to operate the emission control system. Another 8 MW is required to operate auxiliary station equipment.

The FGD systems data are summarized in Table 2-29.

FGD system--The scrubbing system consists of four parallel trains. Each train includes a variable-throat venturi scrubber followed by a multigrid tower absorber. The venturi sections are constructed by 316L stainless steel; the multigrid towers, of carbon steel (shells) with a rubber lining and 316L stainless steel on the lower sloping (downcomer) sections, where the slurry falling from the grids is funneled to the recycle system. Inside each tower are five grids. The first, third, and fifth

TABLE 2-29. FGD SYSTEMS DATA FOR WIDOWS CREEK 8, BRIDGEPORT, ALABAMA

Unit rating (gross), MW	550
(net), MW	516
Fuel	Coal
Average fuel characteristics:	
Heating value, kJ/kg (Btu/lb)	26,200 (11,270)
Ash, %	17.0
Moisture, %	10.0
Sulfur, %	3.7
Chloride, %	
FGD process	Limestone slurry
FGD system supplier	Tennessee Valley Authority
Application	Retrofit
Status	
Startup date:	
Initial	May 1977
Commercial	January 1978
Design removal efficiency:	
Particulate, %	99.5
Sulfur dioxide, %	80.0
Actual removal efficiency:	
Particulate, %	99.5+
Sulfur dioxide, %	85-94
Water loop	Open
Total water makeup	
liter/s per net MW	
(gal/min per net MW)	
Sludge disposal	Unstabilized sludge disposed of in an onsite unlined pond

grids are made of 316L stainless steel, the second and fourth, of fiber-reinforced plastic. Plans for one of the towers call for the installation of packing that will be supported by the grids.

The scrubbing system includes a four-pass vertical chevron mist eliminators constructed of 316L stainless steel. The mist eliminator system is equipped with a continuous wash system.

Reheat of the wet gas is provided by an indirect hot-air steam coil reheat system that raises the wet gas temperature by 28°C (50°F), to a point well above the dewpoint.

Limestone handling and milling equipment includes a shaker for truck and rail unloading, a live storage silo, a wet ball mill, and a cyclone classifier. The grinding system is designed to grind 45 Mg, (50 tons) per hour of dry limestone, so that 90 percent of it is less than 200 mesh. The unloading and storage facilities through the live storage silo are designed to accommodate a future limestone scrubbing facility on Widows Creek Unit No. 7.

Figure 2-30 shows a schematic of the scrubbing facility at Widows Creek 8; and Figure 2-31, a simplified process flow diagram of this system.

Process--Flue gas entering the scrubbing system from the ESP's passes through an induced-draft fan with a capacity of 190 m^3/s (400,000 acfm). The gas then enters one of the four variable-throat venturis. Each venturi is approximately 7 m (23 ft) wide and 8.5 m (28 ft) deep at the variable throat. Approximately 10 percent of the sulfur dioxide is removed in the venturis. The wet flue gas then enters a multigrid tower through which it rises at 3.7 m/s (12 ft/s) and encounters the slurry in a counter-current fashion. After turning through a four-pass vertical chevron-type mist eliminator, the gas joins air drawn from the powerhouse and pumped through steam coils that heat the air to 204°C (400°F). The stack gas temperature is 79.4°C (175°F).

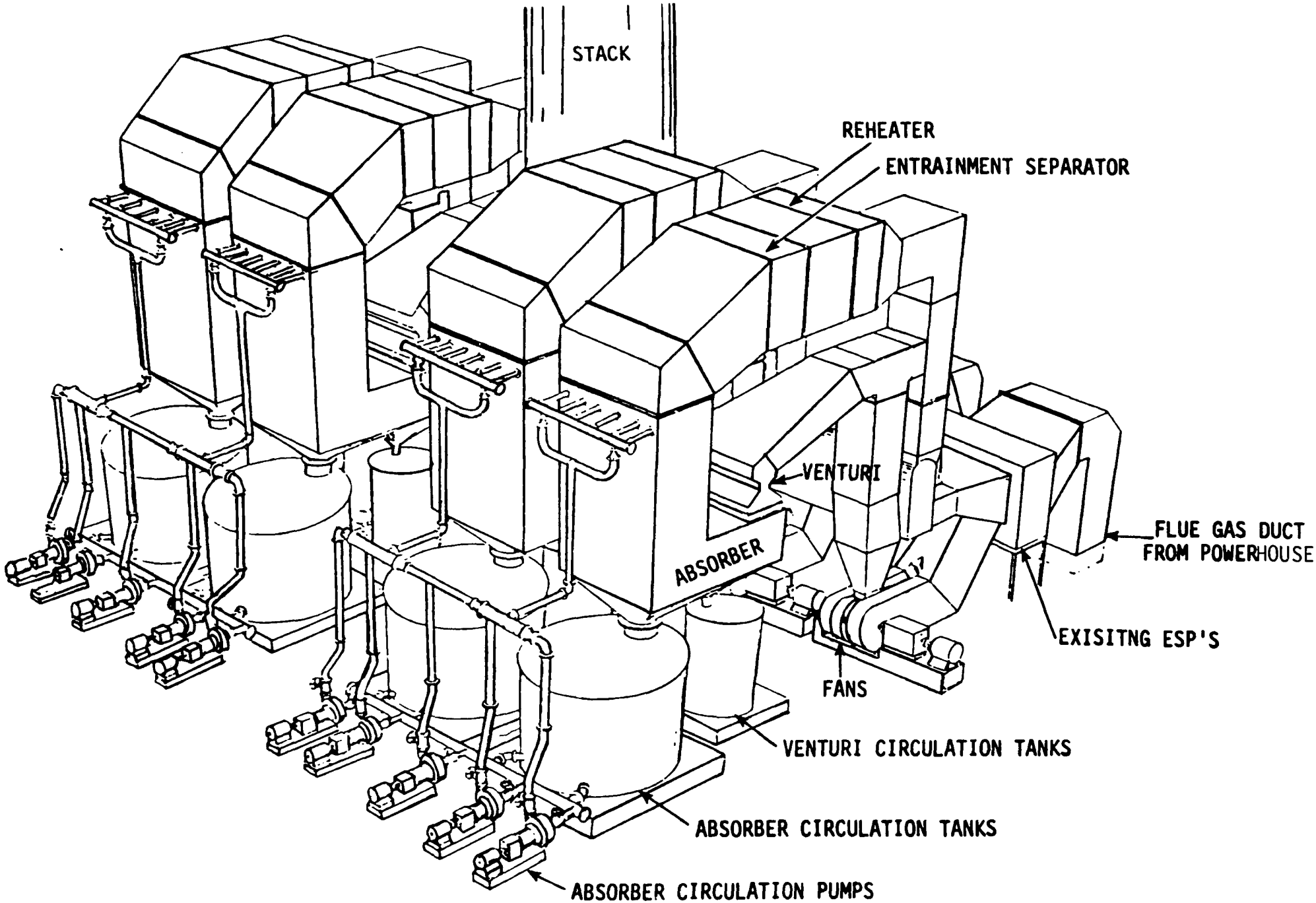

Figure 2-30. A schematic of TVA Widows Creek 8 FGD System.

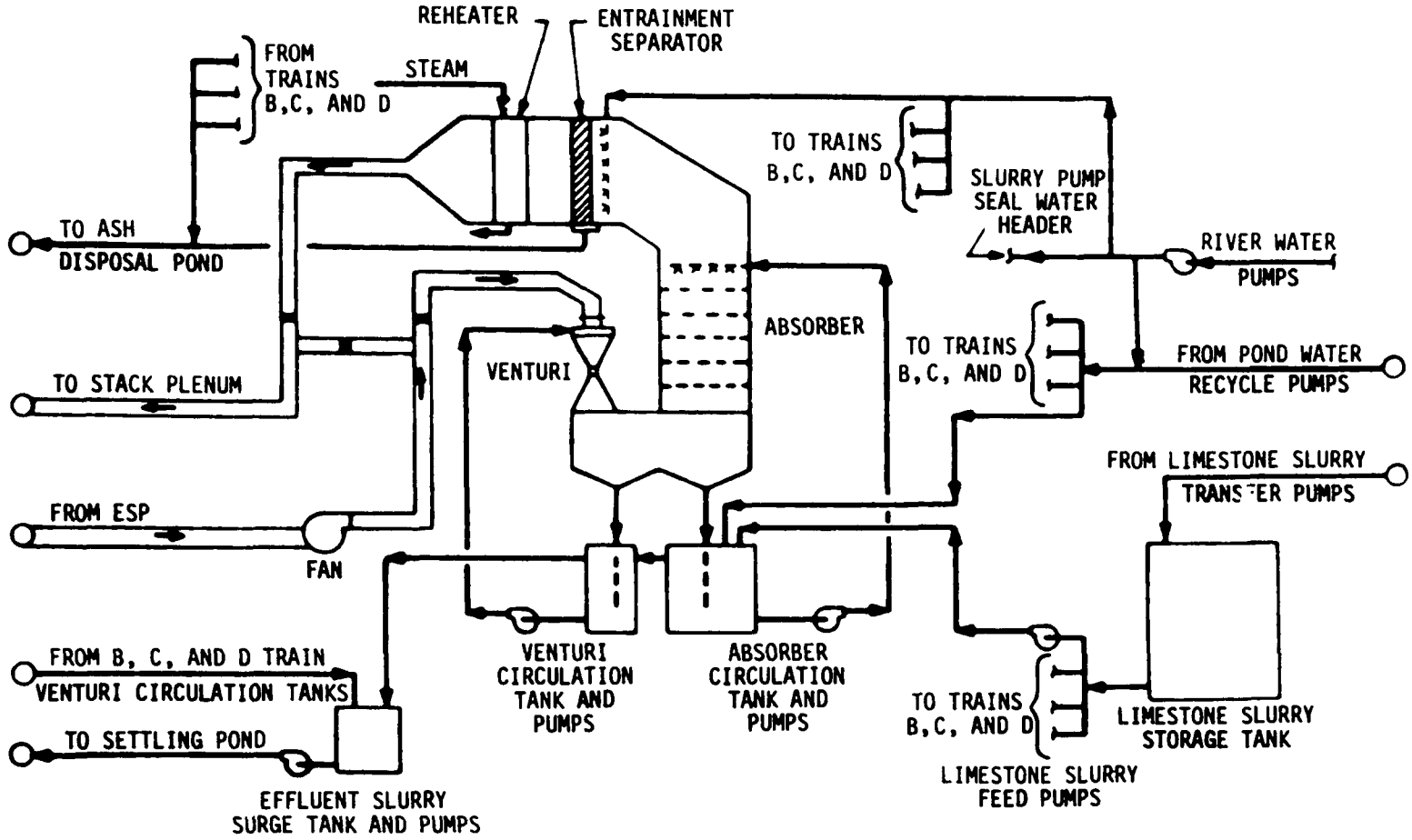

Figure 2-31. A simplified process flow diagram of TVA Widows Creek 8 FGD system.

Performance--Since the scrubbing systems began operations in May 1977, the utility has reported a number of operational difficulties.

Because of poor ESP performance, the induced-draft fans must handle a gas with a high grain load, from 11.4 to 13.7 g/m^3 (5 to 6 gr/ft^3). The high loading, effectively sandblasts the rotors and the resulting erosion causes fan inefficiency and imbalance. Excessive vibration necessitates removing the fan from service. The fan housing also suffers severe erosion.

Each scrubber train has three bottom-entry guillotine dampers, one each for the gas inlet, outlet, and bypass ducts. Initial problems with the dampers resulted from corrosion of the 316 stainless steel seals. Because of the absence of housings and bonnets on the dampers and because the FGD system is pressurized, the dampers have been leaking ash and flue gas excessively. The drive mechanisms below the guillotine dampers have collected ash in the threads, boots, and jack screw assemblies. As of April 1978, the utility reported that the dampers were inoperable except with extraordinary effort, because of electrical component failure, deterioration of boots, and drive mechanism jamming.

Holes and tears have developed at numerous places in the expansion joint fine-ply fabrics.

The most serious problem affecting the scrubber operations have been the failure of rubber linings. In mid-June 1977, an absorber inspection revealed that rubber lining on the downcomer of Train C had come loose and that bare metal was exposed. Patches of loose rubber and bare metal were found in other trains, but only in the sloping sections of the absorber and venturi hoppers. It was believed that the peeling and bubbling resulted from the extremely cold weather during the curing period in January 1976. Replacement material was obtained, and repair work was carried out in early August 1977.

On September 26, 1977, an inspection of the trains during a boiler outage revealed that rubber lining on Train C was again

missing and that the slurry had worn a hole through the carbon steel material of the venturi section hopper wall sloping towards the downcomer. A temporary wear plate was installed to permit operation until the scheduled boiler maintenance outage in October. Other sections of loose rubber were found during this same inspection. These defects were all corrected during the October outage.

On December 20, 1977, an inspection revealed approximately 9.3 m^2 (100 ft^2) of bare metal showing in the four trains. As before, the lining failures were confined to the sloping areas of the absorber and venturi hoppers. Repairs began on December 27, and Unit 8 came back on line in early January 1978.

On January 24, 1978, an inspection showed that large sections of liner were missing and that holes were appearing in the carbon steel shell. The utility decided to replace the rubber lining in the sloping sections with 316L stainless steel plate welded to the carbon steel shell.

Evidence of rubber liner failures has also been found in the centrifugal pumps that send slurry from the ball mill product tank to the classifiers. The liners in these pumps have required high maintenance, possibly because of poor cyclone performance or improper pump speeds.

The sumps in the ball mill house and near the spent slurry surge tanks have been flooding. Limestone spills down into these tanks, and limestone particles settle at the bottoms of the sumps. Consequently, it has been difficult to empty waste from these sumps to the pond.

The wet grind, rubber-lined ball mill, designed for a capacity of 45 Mg/h (50 tons/h), was not functioning as intended. During initial shakedown, rock and ball rejection occurred at rates above 18 Mg/h (20 tons/h). Because coarse reject material was falling into the mill slurry product tank, a chute was installed to convey the material into a barrel and avoid contamination of the finely ground product. Inspection of the product

end of the ball mill revealed that the helix designed to retain balls and rock in the grinding chamber was inadequate. A perforated plate was spot welded to the existing helix and extended over the trommel screen; this plate has satisfactorily resolved the problem.

Multigrids and absorber nozzles have presented problems. The absorber section of each train has five trays of multigrids. Originally, the bottom three of these were 316 stainless steel; and the top two were fiber-reinforced plastic. Poor spray distribution from nozzles eroded the plastic grids; and the stainless steel grids were brought to the top, just below the spray nozzles. Some adjustment in the nozzle cones improved the spread of the spray, but a satisfactory flow pattern had not yet been attained at the time of this report. Because of the nozzle design and the slurry flow, the nozzle spray cones have fallen off or have worn loose from part of their supports. The failure seems less a result of erosion than the intense vibration that wears away the cone supports.

Many instrument problems have resulted from poor initial placement or inappropriate application. Particularly crucial are the pH monitors, which are submerged flow-through meters. These meters give readings on the absorber slurry flowing to the nozzles. The transmitters associated with the pH meters vibrated excessively when placed near the top of the absorber circulation tanks. Relocation of the meters to ground level and replacement of the reference electrode liquid seems to have improved reliability and performance. There has also been poor control of the feed rate of fresh limestone slurry because of a nonlinear response from a linear control signal.

Pressure drop instruments for the gas are excessively sensitive to ambient temperature changes and often go out of calibration. Annubars for gas flow and outlet sulfur dioxide monitors are located downstream of the mist eliminator section of the scrubber and have been unreliable as a result of moisture and particulate plugging. Bracing and reverse air purging have

improved instrument performance somewhat. Scaling and plugging have not been a significant problem, because the pond-return water has not been saturated with calcium sulfate or chloride.

There has been nozzle and header plugging in the venturi section, partly because of excessive sulfates in the slurry. These sulfates occur because of poor pH control, which results from unreliable pH meters and poor control of fresh limestone feed.

Heavy solid particles that solidify upon drying appear to be settling in the venturi nozzle header. Until a steady state is reached and a complete chemical analysis of the system can be made, the cause of this settling cannot be identified.

Since May 1977, the average availability of the Widows Creek 8 FGD system has been 64 percent. Figure 2-32 shows the availability of the system from May 1977 through April 1978; and Table 2-30, the performance factors for the system during the same period.

The particulate removal efficiency at Widows Creek 8 is 99.5 percent. In preliminary tests, the sulfur dioxide removal efficiency has range from 85 to 94 percent. Table 2-31 presents the results of these tests.

2.2.2.6 Texas Utilities, Martin Lake 1 and 2[33-42]--

Martin Lake Steam Electric Station of Texas Utilities consists of four 750-MW (gross) units located in Tatum, Texas. Martin Lake 1 and 2 are operational units. Martin Lake 3 is under construction, and Martin Lake 4 is in the planning stage.

The electric power generating facilities at Martin Lake 1 and 2 consist of Combustion Engineering lignite-fired steam generators with 750-MW (gross) turbine generators. Martin Lake 1 began operation in August 1977, Martin Lake 2, in May 1978.

The coal burned at this station is low-sulfur (0.9 percent sulfur) Texas lignite with an average heating value of 17,170 kJ/kg (7,380 Btu/lb) and an ash content of 8.0 percent.

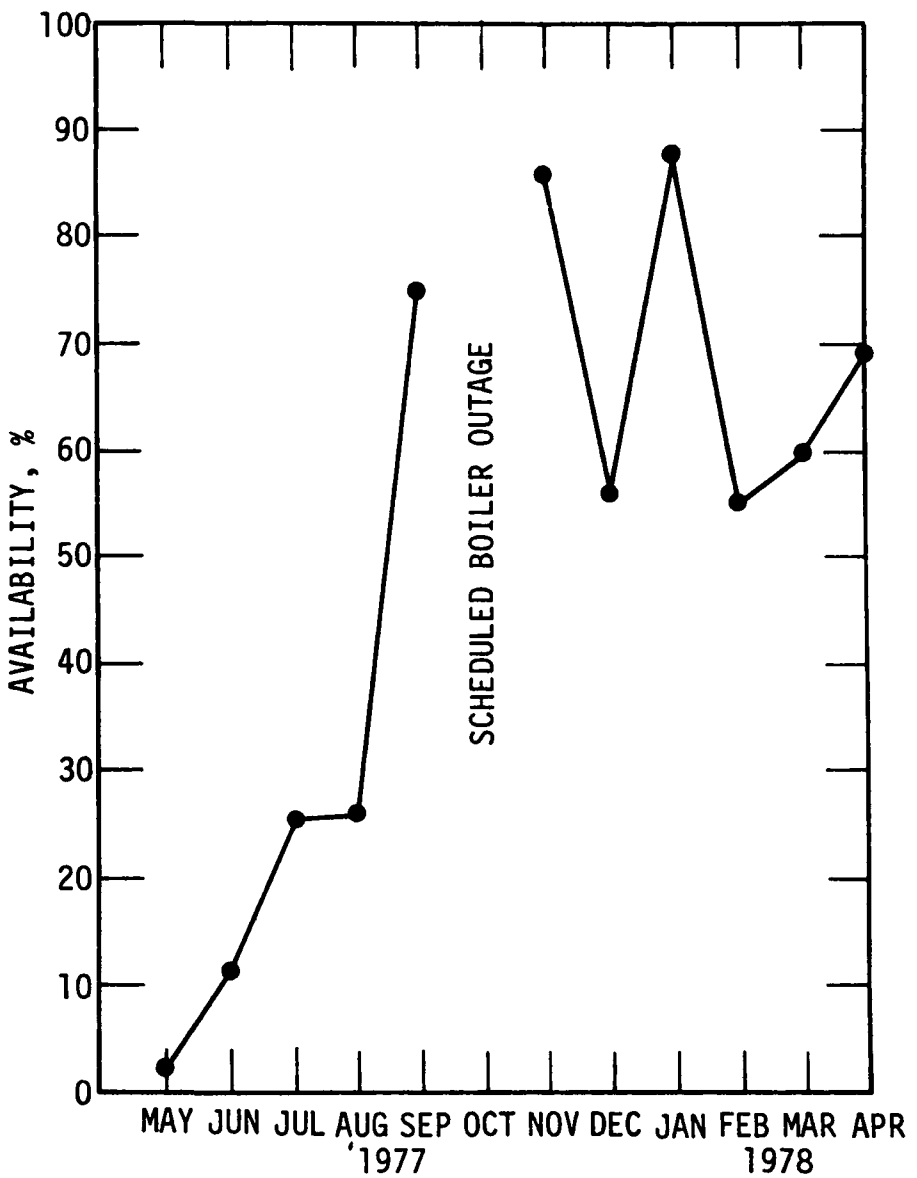

Figure 2-32. Availability of TVA Widows Creek 8 FGD system.

TABLE 2-30. FGD SYSTEM PERFORMANCE OF TVA WIDOWS CREEK 8

Month/year	Availability, %	Operability, %	Reliability, %	Utilization, %
May 1977	2	3		2
June 1977	11	18		11
July 1977	25	28		25
Aug. 1977	26	30	30	26
Sep. 1977	75	71	71	60
Oct. 1977				
Nov. 1977	86	88	88	50
Dec. 1977	56	97	59	56
Jan. 1978	88	96	96	79
Feb. 1978	55	54	61	47
Mar. 1978	60	66	59	58
Apr. 1978	69	83	67	62

TABLE 2-31. PRELIMINARY SCRUBBER SULFUR DIOXIDE REMOVAL TEST DATA FOR WIDOWS CREEK 8[38]

Compliance Test Data

Test Number	1	2	3
SO_2 mass rate (average of 2 runs), kg/h (lb/h)	1,859 (4,095)	899 (1,980)	1,501 (3,305)
Coal rate, Mg/h (tons/h)	181 (199)	184 (203)	167 (184)
Heating value (as fired), kJ/kg (Btu/lb)	26,180 (11,270)	25,902 (11,150)	24,903 (10,720)
Test emission (average of 2 runs), ng/J (lb/106 Btu)	396 (0.92)	189 (0.44)	361 (0.84)

FGD Efficiency and Visual Opacities

Month	Coal sulfur content, %	Visual opacity, % Average	SO_2, ppmv		Efficiency SO_2 Removal (Avg.), %
			Inlet	Outlet	
November	3.4	28	2398	219	91
December	2.9	20	2359	163	94
January	2.1	12	2138	227	89
February	2.2	15[a]	2138	317	85

[a] Only 1 day (February 3, 1978).

Cold-side ESP's designed to be 99.4 percent provide primary particulate control for Martin Lake 1 and 2. Sulfur dioxide is controlled by limestone slurry FGD systems. The ESP's and FGD systems on both units were supplied by Research Cottrell.

The FGD system on each unit consists of six parallel packed spray tower absorbers that scrub a maximum of 75 percent of the boiler flue gas with an efficiency of 95 percent (design) to achieve an overall sulfur dioxide removal efficiency of 71 percent.

Spent scrubbing slurry (15 percent solids) is discharged from each absorber tower into a common stream that flows into a gravity thickener 43 m (140 ft) in diameter. The scrubbing wastes are concentrated to a solids content of 35 percent and the thickener underflow is fed to one of three centrifuges for additional dewatering. Filter cake with a solids content between 68 and 70 percent is discharged from the centrifuges into a Muller-type blender. The cake is combined with fly ash collected in the ESP to form a material that can be conveyed by truck and dumped. Railcars receive the blend for ultimate disposal in a landfill.[39,40,41]

Martin Lake 1 and 2 each use about 10 MW of their gross generating capacities for emissions control. Data about the FGD systems at Martin Lake 1 and 2 are summarized in Tables 2-32 and 2-33. A simplified process flow diagram is shown in Figure 2-33.

FGD system--Each of the six parallel absorber towers includes a three-stage sulfur dioxide removal configuration followed by a two-stage mist elimination system. Reheat is provided by the hot flue gas that goes through the ESP's, but bypasses the absorbers. In a duct before the stack, this unscrubbed gas rejoins the saturated flue gas from each absorber.

The system design includes a separate limestone milling and handling facility for each unit. Each facility includes a limestone storage bin, weigh feeder, ball mill, wet cyclone separator, slurry prepration tank, and related slurry pumps and piping.

TABLE 2-32. FGD SYSTEMS DATA FOR MARTIN LAKE 1, TATUM, TEXAS

Unit rating (gross), MW (net), MW	750
Fuel	Lignite
Average fuel characteristics:	
Heating value, kJ/kg (Btu/lb)	17,166 (7,380)
Ash, %	8.0
Moisture, %	33.0
Sulfur, %	0.9
Chloride, %	
FGD process	Limestone slurry
FGD system supplier	Research Cottrell
Application	New
Status	
Startup date:	
Initial	August 1977
Commercial	
Design removal efficiency:	
Particulate, %	99.4
Sulfur dioxide, %	Absorbers, 95.0; overall 70.5
Actual removal efficiency:	
Particulate, %	
Sulfur dioxide, %	
Water loop	Closed
Total water makeup,	
liter/s per net MW	0.05
(gal/min per net MW)	(0.73)
Sludge disposal	Stabilized, dewatered sludge disposed of in an onsite landfill

TABLE 2-33. FGD SYSTEMS DATA FOR MARTIN LAKE 2, TATUM, TEXAS

Unit rating (gross), MW (net), MW	750
Fuel	Lignite
Average fuel characteristics:	
Heating value, kJ/kg (Btu/lb)	17,166 (7,380)
Ash, %	8.0
Moisture, %	33.0
Sulfur, %	0.9
Chloride, %	
FGD process	Limestone slurry
FGD system supplier	Research Cottrell
Application	New
Status	
Startup date:	
Initial	May 1978
Commercial	
Design removal efficiency:	
Particulate, %	99.4
Sulfur dioxide, %	Absorbers, 95.0; overall 70.5
Actual removal efficiency:	
Particulate, %	
Sulfur dioxide, %	
Water loop	Closed
Total water makeup,	
liter/s per net MW	0.05
(gal/min per net MW)	(0.73)
Sludge disposal	Stabilized, dewatered sludge disposed of in an onsite landfill

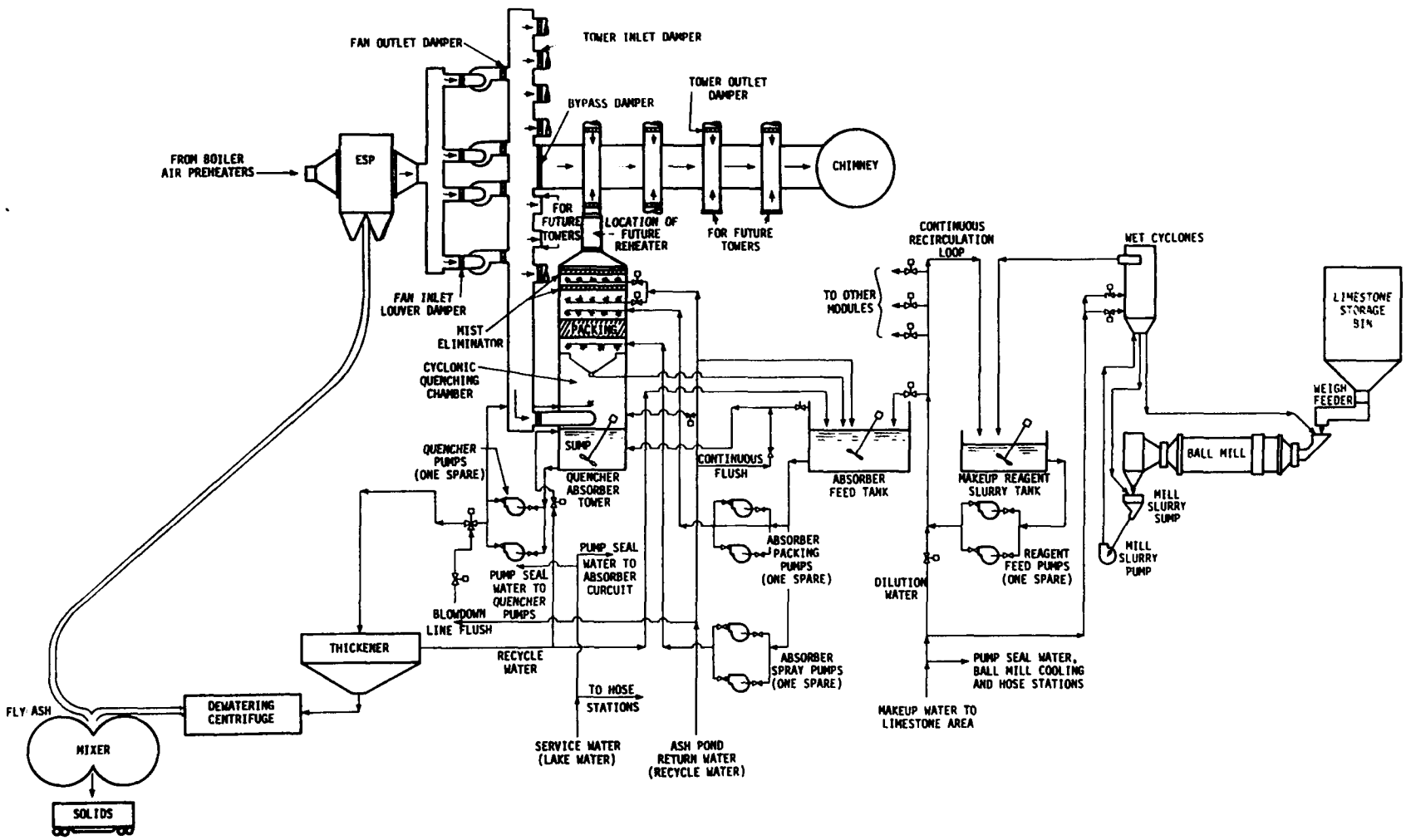

Figure 2-33. Simplified flow diagram of Martin Lake 1 and 2 FGD systems.

Process--The processes description provided applies to both Martin Lake 1 and 2. The Martin Lake 1 and 2 flue gas cleaning facilities are separate systems installed on separate units.

Flue gas exits the boiler, passes through the air preheater, and enters the ESP's at 1495 m^3/s (3,167,000 acfm) and 168°C (335°F). From the ESP's the gas flows into a header for four induced-draft fans that draw the gas into a second header feeding the six absorbers and the bypass duct. The flowrate through each absorber and through the bypass duct is controlled by balancing dampers at every junction. Flue gas enters the base of each absorber tower at 177.2 m^3/s (375,350 acfm) and 168°C (335°F). The gas rises through a cyclonic quenching chamber into the absorber section of the tower at 142.9 m^3/s (302,870 acfm) and 57°C (135°F); it goes through a layer of sprays, packing, and another layer of sprays. After passing a horizontal two-stage mist eliminator system near the top of the absorber tower, the saturated, cleaned gas exits the tower at 144.2 m^3/s (305,500 acfm) and 57°C (135°F) and mixes with hot, bypass gas at 541.2 m^3/s (1,146,650 acfm) and 168°C (335°F) from the second header duct. The combined gas stream enters the stack at 1264.2 m^3/s (2,678,760 acfm) and 97°C (207°F).

Performance--Since Martin Lake 1 began operation in August 1977, a number of problems have occurred; and many modifications have been made. Information is largely unavailable for Martin Lake 2. It is assumed, however, that the Unit 1 modifications have been taken into consideration for possible incorporation in the Unit 2 design.

The utility has had trouble isolating individual absorbers. Dampers provided for the Martin Lake FGD system include a single-louver bypass damper, two consecutive louver dampers at each tower inlet, and single-link-louver dampers at each tower outlet. Even with the addition of seal air blowers between the two tower inlet dampers, isolation of individual towers for personnel access and maintenance has been extremely difficult. Areas of malfunction have included bearings, seal strips, and linkages.

All gas-side expansion joints have been replaced because the original joints could not withstand exposure to slurry and deteriorated. The replacement joints were performing adequately as of October 1978.

Slurry line and spray nozzle plugging that required pipe disassembly and mechanical cleaning was discovered during shutdowns in early 1978. Such plugging was partly attributable to accumulated construction debris, pieces of fallen wetted film contactor (WFC) packing materials, and WFC support beams from October and November 1977.

Sonic flow switches, installed to monitor flow deviations in key process loops were found to be inadequate for an electric generating station. They were eliminated, where possible, or replaced with magnetic flowmeters.

Submerged pH meters in the quencher instrument wells experienced calibration drifts and electrical problems. After an extensive test program, the meters were replaced by flow-through devices with ultrasonic cleaners.

Sonic devices at liquid level in the quencher instrument wells experienced problems related to electronics, poor calibration, slurry foaming, fouling of transducers, and excessive variations in liquid level. These problems were addressed; and the devices have functioned adequately since October 1977, although modifications were still being made at the time of this report because of transducer problems.

Poor gas distribution at the absorber tower inlets led to the relocation of the gas flowmeters at the tower outlets. High amounts moisture from the air and probe plugging were thought to have contributed to the poor performance of the meters.

Electric on-off valve operators on reagent feed and density control valves experienced numerous failures in early operation. Some electric operators were replaced with pneumatic operators, and others were modified to improve performance.

The original fiber-reinforced plastic packing support beams were replaced with 316L stainless steel beams in January and

February 1978. The beams had failed completely in one tower and were on the verge of failure in several other towers when the WFC packing was removed from all towers on November 7 and 8, 1977.

Failure of these beams resulted from inadequate structural design, but was accelerated because solids accumulated in the WFC. The accumulations of solids were caused by operating the FGD system out of chemical balance. Such operation resulted from malfunctioning pH devices and on-off valve operators, as well as the difficulty in manual control that these malfunctions created. Poor slurry distribution to the WFC may also have accelerated this buildup. Later operation with 0.6 m (2 ft) of WFC packing and with the new pneumatic valve operators produced insignificant buildup in the WFC and mist eliminator packings.

Scale buildup at the cyclonic inlets of the absorber towers was discovered in November 1977. Model testing showed that modifications to the inlets would allow operation of the towers for a full year without cleaning. These modifications have been successful and will be made on all towers.

Martin Lake 1 and 2 underwent acceptance tests during August 1978. As of October 1978, the results had not been reported. Research Cottrell has, however, reported experimental sulfur dioxide removal efficiencies. Absorber towers with 1.2 m (4 ft) of WFC packing have achieved sulfur dioxide removal efficiencies greater than 99 percent. Towers with no WFC packing removed from 80 to 85 percent of all sulfur dioxide at peak tower gas velocities. This testing, prompted the installation of 0.6 m (2 ft) of WFC packing in each tower and the increase of maximum tower gas throughput by 10 percent. Typical performance information is unavailable for Martin Lake Station.

REFERENCES FOR SECTION 2.2

1. PEDCo in-house files.

2. McDaniel, C.F. LyCygne Station Unit No. 1 Wet Scrubber Operating Experience. Presented at Utility Scrubber Conference, Denver, Colorado. March 29-30, 1978.

3. Laseke, B.A., Jr. EPA Utility FGD Survey: December 1977 - January 1978. EPA-600/7-89-051a. PEDCo Environmental, Inc., Cincinnati, Ohio. March 1978. pp. 55-59.

4. Melia, M., et al. EPA Utility FGD Survey: August-September 1978. Preliminary report. Prepared for the U.S. Environmental Protection Agency under Contract No. 68-02-2603. PEDCo Environmental, Inc., Cincinnati, Ohio. November 1978. p. 38.

5. Devitt, T., et al. Flue Gas Desulfurization System Capabilities for Coal-fired Steam Generators, Volume II: Technical Report. EPA-600/7-78-032b. PEDCo Environmental, Inc., Cincinnati, Ohio. March 1978. pp. 3-89 through 3-95.

6. PEDCo in-house files.

7. Laseke, B.A., Jr. Survey of Flue Gas Desulfurization Systems: Sherburne County Generating Plant, Northern States Power Company. Preliminary report. Prepared for the U.S. Environmental Protection Agency under Contract No. 68-02-2603. PEDCo Environmental, Inc., Cincinnati, Ohio. December 1978. pp. 2, 5, 7, 8, 13-15, 17-20, 22, 24, 26, 29, 33, 36, 38, 43-49, 52, 54, 56, 57, 58-60.

8. Op. cit. No. 4. pp. 59-62.

9. PEDCo in-house files.

10. Laseke, B.A., Jr. Survey of Flue Gas Desulfurization System: Cholla Station, Arizona Public Service Co. EPA-600/7-78-048a. PEDCo Environmental, Inc., Cincinnati, Ohio. March 1978. pp. 2, 4, 6, 9, 11, 13, 22, 23, 26, 27, 29.

11. Op. cit. No. 4. pp. 4, 5, 24, 25.

12. Laseke, B.A., Jr., et al. Utility FGD Costs: Reported and Adjusted Costs for Operating FGD Systems. Preliminary report. Prepared for the U.S. Environmental Protection Agency under Contract No. 68-02-2603. PEDCo Environmental, Inc., Cincinnati, Ohio. September 1978. Form 1.

13. Op. cit. No. 3. pp. 166-168.

14. Laseke, B.A., Jr. Survey of Flue Gas Desulfurization Systems: Duck Creek Station, Central Illinois Light Company. Preliminary report prepared for the U.S. Environmental Protection Agency under Contract No. 68-02-2603. PEDCo Environmental, Inc., Cincinnati, Ohio. December 1978. pp. 2, 4, 5, 7, 10, 11-14, 16, 18, 21, 23, 28, 32, 35, 37, 44-46, 48-50.

15. Op. cit. No. 4. pp. 6, 26.

16. PEDCo in-house files.

17. Op cit. No. 12.

18. PEDCo in-house files.

19. Op. cit. No. 3. pp. 60-67.

20. Op. cit. No. 4. pp. 9, 10, 40, 41.

21. Power Engineering. New Generating Plants. Barrington, Illinois. May 1978. p. 8.

22. Laseke, B.A., Jr. Survey of Flue Gas Desulfurization System: Lawrence Energy Center, Kansas Power and Light Company. Preliminary report. Prepared for the U.S. Environmental Protection Agency under Contract No. 68-02-2603. PEDCo Environmental, Inc., Cincinnati, Ohio. January 1979. pp. vii-ix, 2, 4, 6, 7, 8, 14, 17, 19, 21-23, 25, 26, 28, 29, 31, 35, 42, 51, 52-54, 56, 57, 65-70.

23. PEDCo in-house files.

24. Op. cit. No. 3. pp. 130-132.

25. Op. cit. No. 4. pp. 19, 72, 73.

26. Op. cit. No. 12.

27. Universal Oil Products, Air Correction Division. Stack Emission Compliance Test Report for the City Utilities of Springfiled, Missouri, Southwest Power Station. Des Plaines, Illinois. September 1977.

28. PEDCo in-house files.

29. Wells, W.L., W.B. Muirhead, and J.H. Buckner. TVA's Experience with Limestone Scrubbers at the 550-MW Widows Creek Unit 8. Presented at American Power Conference, Chicago, Illinois. April 24-26, 1978.

30. Op. cit. No. 3. pp. 141-143.

31. Op. cit. No. 4. pp. 19, 77, 78.

32. Op. cit. No. 12.

33. PEDCo in-house files.

34. Ballard, B., and M. Richman. FGD Systems Operation at Martin Lake Steam Electric Station. Presented at the Joint Power Generation Conference, Dallas, Texas. September 10-13, 1978. pp. 1-17.

35. Op. cit. No. 3. pp. 144, 145.

36. Op. cit. No. 4. pp. 20, 21, 79.

37. Personal communications with D. Haverlah and R. Leard, Texas Air Control Board.

2.3 WELLMAN LORD FGD SYSTEMS

As of September 30, 1978, there were three operational Wellman Lord systems treating flue gas from U.S. utility boilers. These systems represent a total net generating capacity of approximately 735 MW, whereas the one previously reported utility application of a Wellman Lord system represented a net generating capacity of only 115 MW. A list of the domestic operational Wellman Lord FGD installations is presented in Table 2-34. The unit described in detail in the previous report, Dean H. Mitchell 11, is updated in Section 2.3.1.1; and the recently operational San Juan systems are described in Section 2.3.2.1.[1]

2.3.1 Domestic Wellman Lord Scrubbing Units: Previously Identified Operational Systems

2.3.1.1 Northern Indiana Public Service Company, Dean H. Mitchell 11--

No major system design modifications have taken place at the Dean H. Mitchell Power Station since the previous report.

Performance--FGD operations resumed at Dean H. Mitchell on June 13, 1977, after a 5-month outage caused by a boiler-related mishap. Several hundred hours of total system operation at partial and full loads were logged in June and July.

Performance tests by the EPA began on August 29, 1977, and were completed on September 14, 1977. The test period included 12 days of operation at a flue gas equivalent of 92 MW and 3.5 days of operation at a flue gas equivalent of 110 MW. During this period, 91 percent of the sulfur dioxide was removed from the flue gas. Coal containing 3 percent sulfur was burned, and and 207 Mg (204 long tons) of elemental sulfur were recovered. The mean inlet sulfur dioxide concentration of 25 samples was 2709 ng/J (6.3 lb/10^6 Btu); and the mean outlet sulfur dioxide concentration, 288 ng/J (.67 lb/10^6 Btu). All performance criteria were met, including those for control of sulfur dioxide and particulate emissions, consumption of raw materials and electric power, and quality of recovered sulfur.[2]

TABLE 2-34. DOMESTIC OPERATIONAL WELLMAN LORD FGD INSTALLATIONS

Company	Station/unit	Size[a], MW	Initial startup date	New or retrofit	Coal sulfur, %	Design sulfur dioxide removal efficiency, %	Actual sulfur dioxide removal efficiency, %
Northern Indiana Public Service	Dean H. Mitchell 11	115	Nov/76	Retrofit	3.5	90.0	91.0
Public Service of New Mexico	San Juan 1	314	April/78	New	0.8	85.0	
Public Service of of New Mexico	San Juan 2	306	July/78	Retrofit	0.8	85.0	

[a]Net with FGD

After the performance tests, a demonstration test year was begun. The purpose of the test year was to collect data in order to characterize the operation of the plant boiler and scrubber facilities. During October 1977, the FGD unit logged 132 hours of operation with interruptions occurring to make repairs to the sulfur dioxide reduction section, the evaporator, and the boiler. In November 1977, the FGD system operated for 18 consecutive days. Data indicated an average sulfur dioxide removal efficiency of 90 percent, and 290 Mg (285 long tons) of sulfur recovered. A boiler tube leak during November interrupted FGD operations. Maintenance was performed in the evaporator toward the end of the month.

An FGD system outage began in early December because of abnormal boiler operating conditions related to high silica levels in the feedwater. The outage lasted through the end of February 1978; and maintenance was performed on the absorber solution regeneration section, the evaporator circulating pump, and the sulfur dioxide superheater piping.

The FGD system logged ten days of operation in March before shutdown of the boiler for repair of the coal grinding mills and precipitators. Poor quality coal was a major cause of the problem with the grinding mills. The outage lasted through the end of April, when a new supply of high-sulfur coal was obtained.

The FGD system operated intermittently through the end of July because of various problems. In May, only 11 days of operation were logged because the flue gas isolation dampers failed. Other problems included plugging of an entrainment separator in the sulfur dioxide reduction unit and an imbalance of the booster blower.

In August, the boiler operated continuously on high-sulfur coal, and the FGD system logged 707 hours of operation. With the exception of one 2-hour outage caused by a governor malfunction on the sulfur dioxide compressor drive turbine, the FGD system remained operational through September 12, 1978, when the unit was shut down for an annual overhaul. Figure 2-34 illustrates

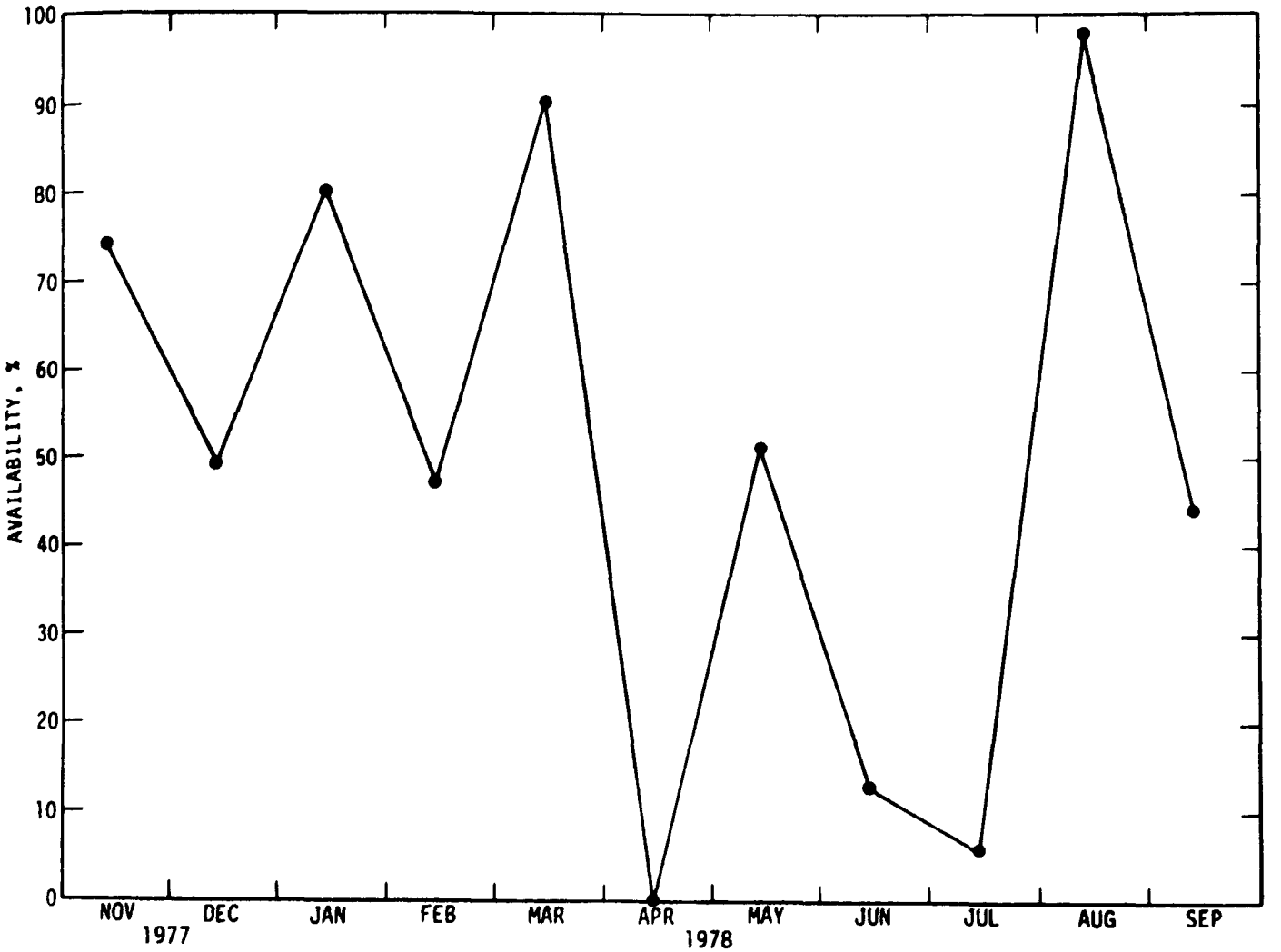

Figure 2-34. Scrubber system availability[a], Northern Indiana Public Service, Dean H. Mitchell II.

[a]The availability index reflects the hours the FGD system is available for operation (whether operated or not) divided by the total hours in the period.

system availability from November 1977 through September 1978. Additional performance data is presented in Table 2-35.[3,4]

Future initiatives[5]--Of primary concern during the one year test period at the Dean H. Mitchell Station is the collection and evaluation of performance and economic data.

Northern Indiana Public Service Company (NIPSCO) will be comparing the Wellman Lord/Allied Chemcial FGD system operating and economic characteristics with sulfur dioxide emission control alternatives. The other three generating units at Dean H. Mitchell Station are presently burning low-sulfur western coal. Thus, firing low-sulfur coal can be compared with using the Wellman Lord/Allied Chemical FGD system. Other testing now under consideration is discussed below.

In 1972 when the FGD plant was designed, there was little or no concern that the process required the use of approximately 396 m^3 (14,000 ft^3) of natural gas per long ton of sulfur produced. However, the cost and availability of natural gas have changed drastically since the system was designed, and another reductant is needed to alleviate this unanticipated disadvantage of the system. The EPA and NIPSCO are considering joint investigation of alternate gaseous reductants, including gases generated by the gasification of coal. It is visualized that hydrogen and carbon monoxide sources, such as low Btu gas, would be suitable for the Dean H. Mitchell Station. If a suitable technology is identified that shows economic and technical promise for demonstration with the Wellman Lord/Allied Chemical FGD plant, the current test period may be extended to include the demonstration of alternate gaseous sources for the reduction of sulfur dioxide to sulfur in the Allied sulfur dioxide reduction installation.

The ultimate reductant source is the abundant supply of coal. Allied Chemical has developed technology for the direct reduction of sulfur dioxide to sulfur utilizing a wide range of steam coals. A long-range demonstration program to make this technology commercially available is also under consideration for the NIPSCO site.

TABLE 2-35. PERFORMANCE DATA FOR DON H. MITCHELL II, NORTHERN INDIANA PUBLIC SERVICE

	Hours in period	Hours available	Hours called on to operate	Hours operated	Availability, %	Reliability, %	Utilization, %
1977 November	720	531	596	428	74	72	90
December	768	379	272	0	49	0	0
1978 January	720	576	0	0	80		0
February	720	336	0	0	47		0
March	720	648	281	215	90	77	30
April	720	0	288	0	0	0	0
May	720	368	529	263	51	50	37
June	720	97	521	3	13	1	0
July	720	43	443	17	6	4	2
August	720	707	720	707	98	98	98
September	720	319	321	319	44	99	44

The EPA has indicated an interest in extending the demonstration period beyond one year to assess the effect of the addition of a fourth Koch valve tray to the absorber. Preliminary studies suggest that a fourth tray would permit sulfur dioxide removal efficiencies in excess of 95 percent. Removal efficiencies in this range could allow the utility to meet the NSPS for sulfur dioxide of 516 ng/J (1.2 lb/10^6 Btu) and bypass some untreated flue gas to reheat the treated flue gas. In addition, the demonstration of high-efficiency absorption capability would be pertinent if the Federal NSPS for sulfur dioxide were made more stringent.

A second area of interest in the study of high-efficiency absorber operation is the evaluation of a novel tray design developed by Merix Corporation. Such a novel tray may be installed as the fourth tray in the absorber to demonstrate in field application that the tray can operate effectively and efficiently without recirculating scrubbing solution. The developer claims that the makeup sodium carbonate solution alone will provide sufficient flow to support satisfactory operation of the tray.

The first year of demonstration testing will determine the ability of the FGD system to follow the typical boiler operating conditions. The test program is important to demonstrate the plant's versatility, reliability, and operability. Operating costs will also be logged for comparison with the costs of other sulfur dioxide control alternatives. An extension of the test period would permit optimization of the energy and economic demands of the plant.

The EPA Industrial Environmental Research Laboratory at Research Triangle Park has initiated a program for the comprehensive environmental assessment of conventional combustion processes. One aim of the program is to compare a well controlled utility boiler firing coal with a well controlled utility boiler firing oil. Dean H. Mitchell 11 is being considered for investigation as the well controlled coal-fired boiler. At the

sites chosen, the EPA will conduct comprehensive characterizations of all inlet and outlet streams and pollution control equipment. The feedstream and emissions characterization data will be used to assess the environmental, economic, social, and energy impacts of the combustion system and associated pollution control equipment.

2.3.2.1 Public Service Company of New Mexico, San Juan 1 and 2--

The San Juan Power Station is owned and operated by the Public Service Company of New Mexico and is located in Waterflow, New Mexico. The plant currently has two operational steam electric generating units producing a total net generating capacity of 620 MW.

San Juan 1 and 2 are base-loaded units with net generating capacities of 314 and 306 MW, respectively. The gross rating of both units is 350 MW. The coal burned at San Juan has an average sulfur content of 0.8 and ash content of 20 percent; it is fired at 181,440 kg/h (400,000 lb/h). San Juan 1 developes a flue gas flow of 416 m^3/s (882,000 scfm) at 27°C (80°F); and San Juan 2, a flow of 374 m^3/s (792,000 scfm) at the same temperature.[6,7]

Pollution control[8,9]--The emission control systems at San Juan 1 and 2 were supplied by Davy Powergas and utilize the Wellman Lord process for removal of sulfur dioxide from the flue gas. Each system consists of four scrubber modules, three of which are required to handle full boiler load operations and one of which is a spare. A hot-side electrostatic precipitator (ESP) precedes each scrubber for primary particulate control and provides a 99.8 percent removal efficiency. The FGD system inlet particulate loading (dry) is 0.121 g/m^3 (0.053 gr/ft^3) at San Juan 1 and 0.18 g/m^3 (0.079 gr/ft^3) at San Juan 2. The inlet sulfur dioxide concentration for each averages 850 ppm, with a range from 490 to 1200 ppm. The dry booster blower on each delivers the flue gas through a variable-throat venturi to the absorber at a design pressure drop of 7.7 kPa (31 in.H_2O). The flue gas is cooled and saturated in the venturi by water and

slurry recirculated to the venturi sprays at 225 liters/s (3,570 gal/min). Fly ash captured by the scrubbing solution is purged continuously from the system and buried in an 11.3-km^2 (2800-acre) mine disposal facility.

The absorption of sulfur dioxide from the flue gas takes place in a five-stage absorber. Each stage consists of a valve tray and a collector tray. A sodium sulfite solution reacts with the sulfur dioxide to form sodium bisulfite. Each absorber was designed for a flow of 215 m^3/s (455,000 acfm) at a pressure drop of 4 kPa (17 in.H_2O). The design liquid-to-gas ratio of each absorber is 0.23 liter/m^3 (1.7 gal/10^3 ft^3). A mist eliminator removes entrained liquid droplets, and an indirect steam reheat system provides a temperature boost of 28°C (50°F) to the exiting flue gas.

The product solution collected on the bottom of the collector tray of each absorber overflows to the absorber surge tank. From the tank, the solution is pumped through a filter to ensure that no fly ash enters the evaporator system. A small sidestream of the filtered solution is sent to the purge treatment area to remove the sodium sulfate. The purge treatment equipment consists of four chilled-wall crystallizers. A slurry of sodium sulfate crystals forms in these crystallizers and is then removed in a centrifuge. The bulk of the product solution is pumped to the evaporator for regeneration of the sodium sulfite.

The evaporation system consists of a forced circulation vacuum evaporator. The filtered solution is recirculated in the evaporator, where steam at 345 kPa (50 psig) is used to evaporate the water from the sodium bisulfite solution. When sufficient water has been removed, sodium sulfite crystals form and precipitate. Sulfur dioxide is removed with the overhead vapors. The slurry formed by the sodium sulfite crystals is withdrawn continuously to the dump/dissolving tank, where condensate from the evaporator is used to dissolve the crystals in the solution, which is pumped back to the top stage of the absorber.

Water vapor is removed from the sulfur dioxide in water-cooled condensers. The sulfur dioxide is compressed by a liquid ring compressor for introduction to the Allied Chemical facility for reducing sulfur dioxide. The gas stream is about 85 percent sulfur dioxide; the remainder, mostly water vapor.

Sodium lost as sulfate in the purge treatment system is replenished by the addition of sodium carbonate to the absorber solution. Soda ash is brought to the plant in trucks and transferred to the 101 Mg (100 ton) storage bin by a pneumatic conveying system. It is metered to the 462,000-liter (122,000-gal) slurry tanks by a bin activator and belt feeder. The soda ash slurry is pumped to the absorber feed tank by parallel centrifugal pumps.

The small sidestream of filtered solution from the absorber is pumped to the four chilled-wall crystallizers, where sodium sulfate crystals form. The crystallized slurry is centrifuged to extract the sodium sulfate crystals, and the clear solution is returned to the evaporator feed system. The sodium sulfate crystals are melted and fed to a stream-heated dryer, whose discharge product is stored in a bin until loaded in trucks for shipment. Any gases that evolve from the purge treatment are chemically scrubbed and vented to the atmosphere.

The compressed sulfur dioxide is fed to the Allied Chemical sulfur dioxide-reduction plant, where it is reacted with natural gas. The resulting elemental sulfur is condensed and stored in molten form for shipment. Waste gases are burned in an incinerator to convert any hydrogen sulfide to sulfur dioxide and returned to the absorber inlet.

The sulfur regeneration rate of the San Juan unit is 0.96 Mg/h (0.94 tons/h). Table 2-36 provides additional system design data.

Performance history[10]--Initial FGD operation began at San Juan 1 on April 8, 1978. After startup, the system was operated with only two of the necessary three modules online. Thus, one-third of the flue gas was bypassed until the end of September,

TABLE 2-36. FGD SYSTEMS DATA FOR SAN JUAN 1 AND 2 WATERFLOW, NEW MEXICO

Unit rating (gross), MW (net), MW	San Juan 1 314 San Juan 2 306
Fuel	
Average fuel characteristics:	
Heating value, kJ/kg (Btu/lb)	
Ash, %	20
Moisture, %	
Sulfur, %	0.8
Chloride, %	
FGD process	Wellman Lord
FGD system supplier	Davy Powergas
Application	Unit 1 New Unit 2 Retrofit
Status	
Startup date:	
Initial	Unit 1 April 1978
Commercial	Unit 2 July 1978
Design removal efficiency:	
Particulate, %	99.5
Sulfur dioxide, %	85.0
Actual removal efficiency:	
Particulate, %	
Sulfur dioxide, %	
Water loop	Closed
Total water makeup, liters/s per net MW (gal/min per net MW)	
Sludge disposal	Elemental sulfur produced

when modifications necessitated by an unusually large pressure drop access the venturis were performed. Adjustable plumb bobs within the modules were moved further away from the venturis to improve the gas flow and reduce the pressure drop.

Initial operation at San Juan 2 began late in August 1978. Early in September, the system was run in an integrated mode with three modules. Initial problems were encountered with the booster boiler control damper. Because of the recent startup of the San Juan units, typical operating hours and reliability parameters are not yet available.

REFERENCES FOR SECTION 2.3

1. Melia, M., et al. EPA Utility FGD Survey August-September 1978. Preliminary Report. Prepared for the U.S. Environmental Protection Agency under Contract 68-02-2603. PEDCo Environmental, Cincinnati, Ohio. November 1978. p. 92.

2. Kelly, W.E., et al. Air Pollution Emission Test: Volume I: First Interim Report, Continuous Sulfur Dioxide Monitoring at Steam Generaters. Emission Measurement Branch Report No. 77 SPP 23A. The U.S. Environmental Protection Agency, Research Triangle Park, North Carolina.

3. Op. cit. No. 1. pp. 57-58.

4. Laseke, B.A., Jr. EPA Utility FGD Survey: December 1977-January 1978. EPA-600/7-78-051a. PEDCo Environmental, Cincinnati, Ohio. March 1978. p. 106.

5. Link, W.F., and W.H. Ponder. Status Report on the Wellman-Lord/Allied Chemical Flue Gas Desulfurization Plant at Northern Indiana Public Service Company's Dean H. Mitchell Station. In: Proceedings of the Symposium on Flue Gas Desulfurization-Hollywood, FL, November 1977 (Volume). EPA-600/7-78-058a. March 1978.

6. PEDCo in-house files.

7. Op. cit. No. 1. pp. 16, 18.

8. Devitt, T., et al. Flue Gas Desulfurization System Capabilities for Coal-Fired Steam Generators. EPA-600/7-78-032b. PEDCo Environmental, Cincinnati, Ohio. March 1978. pp. 3-276 through 3-282.

9. Personal communication between R. Mullens, Public Service Company of New Mexico, and H.J. Young, Edison Electric Institute. March 21, 1975.

10. Op. cit. No. 1. pp. 68-69.

2.4 OTHER FGD SYSTEMS

2.4.1 Domestic Alkaline Fly Ash/Lime Scrubbing Units

At the time of the previous report publication, only one utility, Montana Power, was using alkaline fly ash as the primary absorbent for sulfur dioxide in flue gas from a full-scale commercially operating utility boiler. The alkaline fly ash/lime scrubbing system at Montana Power's Colstrip station was discussed in Appendix A of the earlier report; that discussion has been updated in Appendix A of this report. The text that follows describes the background and performance of the Colstrip facility and of the new Milton R. Young facility, which uses alkaline fly ash/lime scrubbing.

2.4.1.1 Montana Power, Colstrip 1 and 2[1-5]--

Colstrip Power Station of Montana Power Company is currently a two-unit station (with plans for two additional units) located near Colstrip, Montana, approximately 160 km (100 miles) east of Billings, Montana. Colstrip 1 and 2 are identical new 358-MW (gross) units. The planned units, Colstrip 3 and 4, are each rated at 700 MW (gross). Colstrip 1 began operation in September 1975 and was declared commercial in November 1975. Colstrip 2 began operation in May 1976 and was declared commercial in August 1976.

The electric power generating facilities at Colstrip 1 and 2 consist of pulverized-coal-fired steam generators with turbine generators.

The coal burned at these units is subbituminous low-sulfur coal with a heating value of 20,570 kJ/kg (8,843 Btu/lb). The sulfur content ranges from 0.4 to 1 percent and averages 0.77 percent. The ash content varies from 6.1 to 12.6 percent.

Primary particulate and sulfur dioxide control is provided by an alkaline fly ash/lime scrubbing system supplied by A. D. Little and Combustion Equipment Associates. This system consists of three scrubber modules, each capable of handling 40 percent of the boiler flue gas capacity. The scrubbing system is designed

to remove 99.5 percent of the particulate matter and 60.0 percent of the sulfur dioxide from 100 percent of the boiler flue gas. The scrubbing wastes, consisting of unreacted fly ash, calcium sulfate, and calcium sulfite, are discharged to an initial holding basin adjacent to the scrubber plant and then pumped 4.8 km (3 miles) to a permanent sludge disposal pond.

The Colstrip station uses about 24 MW of its current gross generating capacity of 716.8 MW to operate the emission control system. Another 32.8 MW are required to operate auxiliary station equipment.

FGD system data are summarized in Tables 2-37 and 2-38. A simplified process flow diagram is shown in Figure 2-35.

FGD system--Each scrubbing system at Colstrip consists of three parallel scrubber modules. Each scrubber includes a variable-throat venturi for particulate and sulfur dioxide removal and a spray absorption section for additional sulfur dioxide removal. The venturi and spray column operate with a recirculating slurry containing 12 percent solids. The venturi operates with a pressure drop of 4.2 kPa (17 in.H_2O). The venturi section is designed for a liquid-to-gas ratio (L/G) of 2 liters/m^3 (15 gal/10^3 ft^3); and the spray absorbtion section, for an L/G ratio of 2.4 liters/m^3 (18 gal/10^3 ft^3). A wash tray system has been provided below the chevron mist eliminators to dilute the entrainment and prevent plugging of the mist eliminators. Fans are located downstream of the scrubber and operate on dry reheated gas. Colstrip 1 was the first commercial system to utilize the alkalinity of the fly ash for a major portion of the sulfur dioxide removal. Supplemental lime, which is added as required for pH control, is pumped from the slaker to the reaction tank in the base of the scrubber modules. Flue gas reheat is provided by an inline steam coil system that increases the temperature of the saturated gas above the dew point.

Process flow--Boiler flue gas exits the air reheater and enters the scrubbing system at 675 m^3/s (1,430,000 acfm) and

TABLE 2-37. FGD SYSTEMS DATA FOR COLSTRIP 1, COLSTRIP, MONTANA

Unit rating (gross), MW	358
(net), MW	330
Fuel	Subbituminous coal
Average fuel characteristics:	
Heating value, kJ/kg (Btu/lb)	20,570 (8,843)
Ash, %	8.6
Moisture, %	23.9
Sulfur, %	0.77
Chloride, %	
FGD process	Alkaline fly ash and lime slurry
FGD system supplier	A.D. Little/Combustion Equipment Associates
Application	New
Status	
Startup date:	
Initial	September 1975
Commercial	November 1975
Design removal efficiency:	
Particulate, %	99.5
Sulfur dioxide, %	60.0
Actual removal efficiency:	
Particulate, %	99.5
Sulfur dioxide, %	75.0
Water loop	Closed
Total water makeup, liters/s per net MW (gal/min per net MW)	
Sludge disposal	Unstabilized sludge is disposed of in an offsite unlined pond

TABLE 2-38. FGD SYSTEMS DATA FOR COLSTRIP 2, COLSTRIP, MONTANA

Unit rating (gross), MW	358
(net), MW	330
Fuel	Subbituminous coal
Average fuel characteristics:	
Heating value, kJ/kg (Btu/lb)	20,570 (8,843)
Ash, %	8.6
Moisture, %	23.9
Sulfur, %	0.77
Chloride, %	
FGD process	Alkaline fly ash and lime slurry
FGD system supplier	A.D. Little/Combustion Equipment Associates
Application	New
Status	
Startup date:	
Initial	May 1976
Commercial	August 1976
Design removal efficiency:	
Particulate, %	99.5
Sulfur dioxide, %	60.0
Actual removal efficiency:	
Particulate, %	99.5
Sulfur dioxide, %	75.0
Water loop	Closed
Total water makeup, liters/s per net MW (gal/min per net MW)	
Sludge disposal	Unstabilized sludge is disposed of in an offsite unlined pond

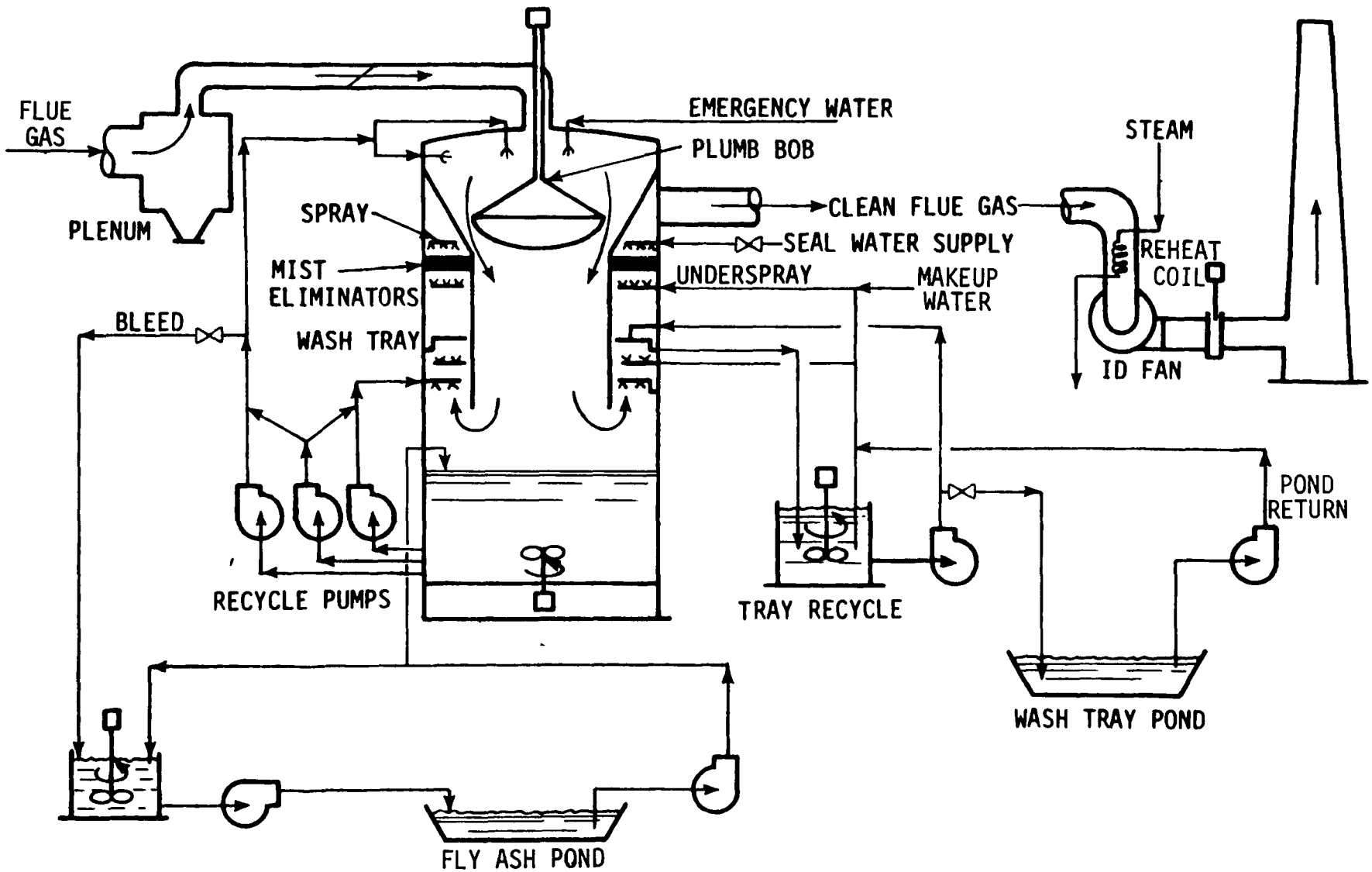

Figure 2-35. Process diagram of FGD module at Montana Power Co. Colstrip 1 and 2.

144°C (291°F). Flue gas enters one of the three plenum sections, where initial fly ash removal occurs. Flue gas is ducted to the top of the module and flows down into the venturi section, which forms a column through the center of the module. The gas is saturated, and most of the particulate matter is removed in the venturi section. Initial sulfur dioxide removal also occurs. The venturi is equipped with a variable throat to maintain a constant pressure drop. Each venturi throat has a throat a 4.6 m (15-ft) in diameter. The throat is constructed of carbon steel and lined with abrasion-resistant bricks. The plumb bob, which controls the pressure drop, is made of 316 stainless steel. The gas flows down from the venturi toward the reaction tank and abruptly turns 180 degrees; it then rises through the spray zone, which forms a ring around the venturi section. The rising gas contacts a recycle spray of absorption slurry. The slurry from the venturi and the absorber spray is collected and held in the base of the module; it is recirculated at an L/G ratio of 2 liters/m^3 (15 gal/10^3 ft^3) for the venturi and 2.4 liters/m^3 (18 gal/10^3 ft^3) for the absorber spray. The absorber section is constructed of carbon steel and lined with flaked glass polyester. After the spray zone, the gas encounters a 316 stainless steel wash tray that removes most of the entrained slurry and water droplets before the mist eliminator.

After the wash tray, the gas rises up through a four-pass horizontal chevron and a mesh pad mist eliminator, both constructed of Norel plastic. The gas leaves the absorption section at a temperature of about 49°C (120°F) and enters an in-line steam coil reheat system that boosts the wet gas temperature 28 to 42 (50 to 75°F). The reheated gas then passes through the dry induced-draft fans and is discharged to atmosphere from the top of the 152-m (500-ft) stack.

Performance--The overall performance of the FGD systems at Colstrip 1 and 2 has been good, although certain problems were encountered. The monitors for stack opacity and nitrogen oxides, as well as those for sulfur dioxide on the inlets and outlets of

the scrubber modules, have exhibited erratic behavior. A corrective program, however, has improved monitor data. The inline pH probes were eroding and loosing sensitivity because of deposits on the elements. Slurry density monitors were also erratic, and a test program was undertaken to isolate these devices from vibration. Both slurry density and pH, key operating parameters, had to be taken manually.

Because of deposits (not calcium sulfate or calcium sulfite scale) on the wet-dry interface at the entrance to the scrubber modules, system availability was reduced significantly. Tests showed that there was a maldistribution of the dust entering each module and that gas velocity varied enormously from one side to the other of each entrance. A model study of the liquid flow on the tangential shelf above the venturi indicated that gas flow turning vanes in the duct elbow above each scrubber module and liquid guiding vanes and baffles on the tangential shelf were required to reduce buildup at the wet-dry interface. One module was modified with such encouraging results that modifications were made to the remaining five modules. Actual operating experience from the modules so equipped has shown a significant reduction in cleaning time and has increased the time increment between inspection and cleanings.

The supplementary alkali feed system was difficult to use because of line plugging and equipment failure. The lime system was modified to be simple to use and less prone to plugging. Pinch valves were placed next to the scrubber on each feed line, so that solids accumulation is automatically cleared as these valves are operated. Although the alkaline ash captured by the scrubber has generally kept scrubber pH within the control range, it was hoped that better control of the lime system would provide more constant pH and allow optimal sulfur dioxide removal.

Failures of the protective flaked glass lining on the carbon steel vessel walls and ducts occurred. These failures were evident prior to a major temperature excursion at Colstrip 1 in October 1976. The excursion followed a complete station power

blackout and the failure of the emergency quench water supply system for the scrubbers to operate. The flaked glass lining and the plastic mist eliminators were seriously damaged at Colstrip 1 and accounted for low scrubber availability during November and December 1976.

The motor of an induced-draft fan failed during November and December 1976 independently of the temperature excursion. This failure also reduced availability. However, if the fan motor failure had not been considered, the scrubber availability at Colstrip 1 would have been 88.5, 94.0, and 81.6 percent for October, November, and December, respectively. Problems with other induced-draft fan motors early in 1977 reduced scrubber availability.

The availability of 63 percent at Colstrip 2 during May 1977 reflects fan motor repairs and the modifications to reduce build-up at the wet-dry interface.

Inspection of an induced-draft fan rotor during the spring of 1977 revealed cracks in the center plate next to the blades. Also other fans were then cleaned and inspected. When cracks were found or when it was suspected that cracks might form, the faulty portions of fans were ground and welded; and stiffener plates were added. Availabilities during the summer of 1977 reflected this repair work.

Quick clean basket strainers were added to the suction piping of the two main recycle pumps of each vessel to replace the startup strainers contained in a pipe spool. This replacement has allowed deposits and foreign materials to be removed before they clog spray nozzles and has also decreased maintenance and downtime on the vessles.

A program was undertaken to evaluate abrasion-resistant protective lining materials that could be used where the flue gas makes a 180-degree turn after the venturi downcomer and passes through the absorption sprays. The absorption spray slurry erodes the flaked glass lining, which has been replaced at least once in each module since startup.

A program for evaluating corrosion-, temperature-, and abrasion-resistant materials in other areas of the scrubber was also undertaken. Small test patches and full linings were tried on several scrubber modules.

Plugging of spray nozzles under the wash trays on scrubber modules of both units occurred during May 1977 and forced the plants to shut down. The major cause of the problem was piping that had broken in the wash tray pond and allowed material from the pond to be ingested. A parallel pipeline and pumping system was installed to bring the units back on line, and repairs were made to the original piping.

The scrubber ponds are reclaimed by dredging sludge to a disposal pond approximately 4.8 km (3 miles) from the plant site. Liquid from the pond is returned to the scrubber ponds when the dredge is not operating. The scrubber sludge deposits in deltas in the ponds and contains from 55 to 60 percent solids. The material hardens so well that the dredge has had difficulty in reslurrying the sludge. Because of the residual alkalinity, the deposited sludge becomes like cement. Improved cutters for the dredge and a delumper ahead of the dredge pump are expected to increase the solids handling capacity. The wash tray pond filled with solids more rapidly than had been expected, and the removal of these solids has been a problem. Each pond at the plant has its own chemical identity based on water balances. Because dredge cannot be used to empty the wash tray pond without adversely affecting the plant operation or pond water balances, a less efficient clamshell operation was put into use. Plans are being developed for the addition of another wash tray pond, so that one may be dewatered and cleaned while the other is in operation.

Many emission tests have been conducted on the Colstrip units. During the spring of 1977, EPA compliance tests for particulates, sulfur dioxide, and nitrogen oxides were completed on both plants; and emission monitor certification testing was conducted after the compliance tests. Table 2-39 gives background

TABLE 2-39. BACKGROUND INFORMATION FOR SO_2 EMISSIONS AT COLSTRIP 1 AND 2[53]

	Emissions of SO_2		
	kg/h (lb/h)	ng/J (lb/10^6 Btu)	ppm
Maximum emissions allowed by NSPS for a 358-MW unit	1844 (4063)	516 (1.2)	510
Scrubber guarantee for a 358-MW unit	1537 (3386)	430 (1.0)	425
Projected emissions from pilot plant for a 358-MW unit firing:			
Coal with a sulfur content of 0.78 percent and an ash content of 8.19 percent	633 (1394)	176 (0.41)	185
Coal with a sulfur content of 1.0 percent and an ash content of 12.85 percent	940 (2071)	262 (0.61)	260

information about sulfur dioxide emissions at Colstrip 1 and 2. Tables 2-40 and 2-41 show the results of the tests for sulfur dioxide and indicate that sulfur dioxide emissions are well below the maximum allowed by the guarantee and Federal standards. Although efficiencies cannot be accurately calculated because scrubber inlet data have not been taken, it appears that a sulfur dioxide removal efficiency between 70 and 75 percent is being achieved.

Figures 2-36 and 2-37 show the availabilities of Colstrip 1 and 2, respectively. Table 2-42 lists the data upon which Figures 2-36 and 2-37 are based and includes qualifications for data when necessary.

2.4.1.2 Minnkota Power Cooperative, Milton R. Young 2[6-9]--

The Milton R. Young Station is owned and operated by Minnkota Power Cooperative and Square Butte Electric Cooperative. It is a two-unit station in Center, North Dakota. Milton R. Young 1 is an existing 240-MW (gross) unit; Milton R. Young 2, a new 477-MW (gross) unit.

The electric power generating facilities at Milton R. Young 2 consist of a Babcock and Wilcox cyclone steam generator with a turbine generator. Milton R. Young 2 began operation in June 1977 and was declared commercial in June 1978.

The coal burned at Milton R. Young power station is low-sulfur (0.7 percent sulfur) North Dakota lignite with a heating value of 15,000 kJ/kg (6,500 Btu/lb). Its ash content is 7 percent.

Primary particulate control is provided by a 99.6 percent efficient cold-side electrostatic precipitator supplied by Wheelabrator-Frye. Sulfur dioxide is controlled with an FGD system supplied by A. D. Little and Combustion Equipment Associates. The FGD system utilizes a solution of solubilized alkali obtained from the fly ash collected in the ESP's and supplemented by lime. The FGD system is designed to remove 85 percent of the sulfur dioxide from 85 percent of the boiler flue gas for an overall sulfur dioxide removal efficiency of approximately 70 percent.

TABLE 2-40. TESTS OF SO_2 EMISSIONS AT COLSTRIP 1[53]

Date	Coal as received				Emissions of SO_2		
	Gross MW	Heating value, kJ/kg (Btu/lb)	Ash content, %	Sulfur content, %	kg/h (lb/h)	ng/J (lb/10^6 Btu)	ppm
2/76	353[a]	20,092 (8638)	9.03	0.83	720 (1587)	206 (0.48)	197
4/76	210[b]	20,611 (8861)	7.79	0.71	207 (456)	99 (0.23)	87
7/76	184[b]	20,485 (8807)	8.49	0.64	117 (258)	64 (0.15)	53
9/76	186[b]	20,080 (8633)	7.93	0.62	125 (275)	64 (0.15)	56
12/76	223[b]	19,524 (8394)	8.54	0.94	408 (898)	185 (0.43)	154
1/77	230[b]	20,280 (8719)	8.17	0.77	350 (770)	150 (0.35)	133
5/77	331[a]	20,587 (8851)	8.41	0.61	251 (552)	69 (0.16)	72
6/77	340[a]	20,673 (8888)	8.96	0.91	528 (1164)	140 (0.325)	122

[a] Three scrubber modules were online.

[b] Two scrubber modules were online.

TABLE 2-41. TESTS OF SO_2 EMISSIONS AT COLSTRIP 2[53]

Date	Coal as received				Emissions of SO_2		
	Gross MW[a]	Heating value, kJ/kg (Btu/lb)	Ash content, %	Sulfur content, %	kg/h (lb/h)	ng/J (lb/10^6 Btu)	ppm
10/76	331	19,464 (8368)	7.96	0.56	594 (1309)	181 (0.42)	178
11/76	327	19,734 (8484)	7.86	0.59	316 (696)	99 (0.23)	83
12/76	324	20,213 (8690)	7.87	0.64	354 (780)	107 (0.25)	98
3/77	335	20,327 (8739)	7.96	0.63	301 (664)	86 (0.20)	84
6/77	305	20,709 (8929)	8.48	0.72	271 (597)	81 (0.19)	67

[a] Three scrubber modules were online.

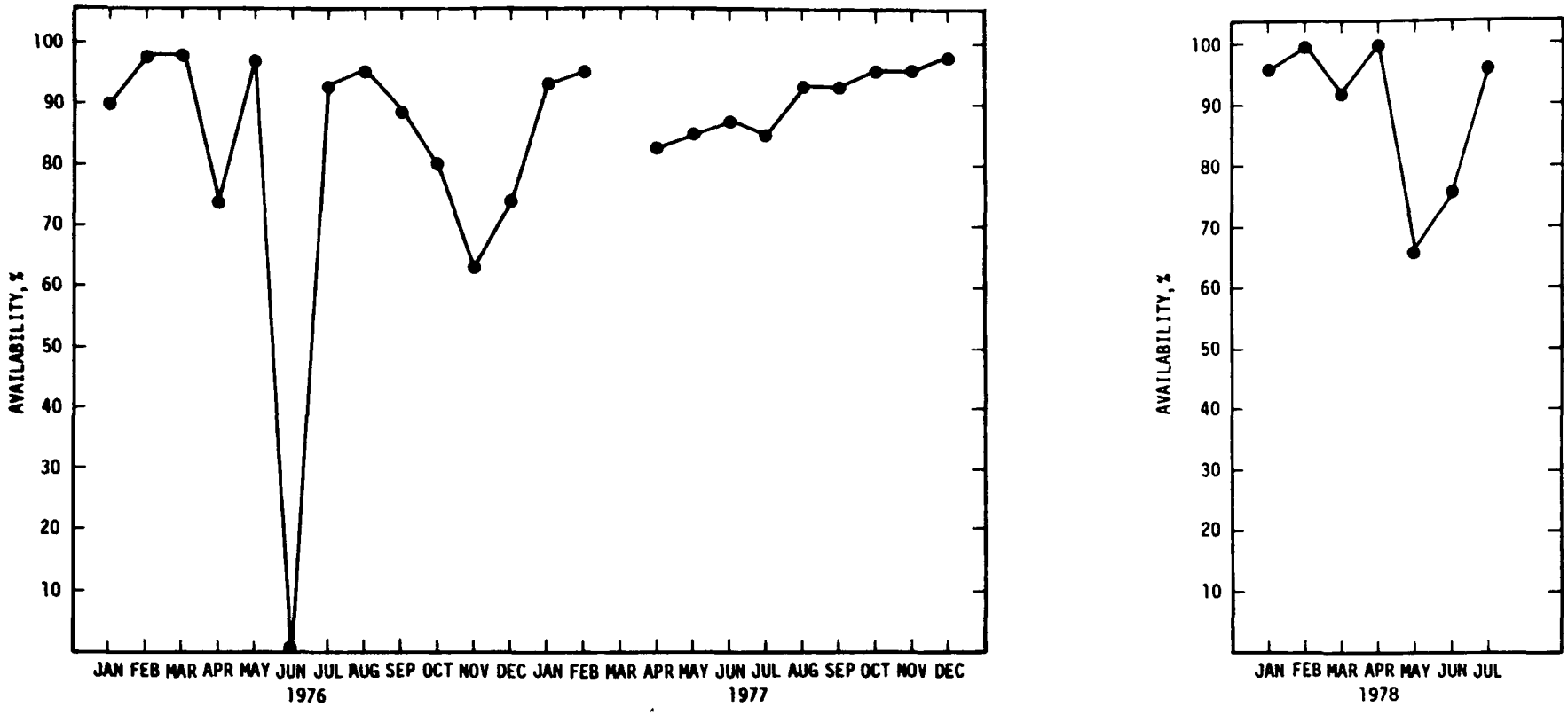

Figure 2-36. FGD system availability, Montana Power, Colstrip 1.

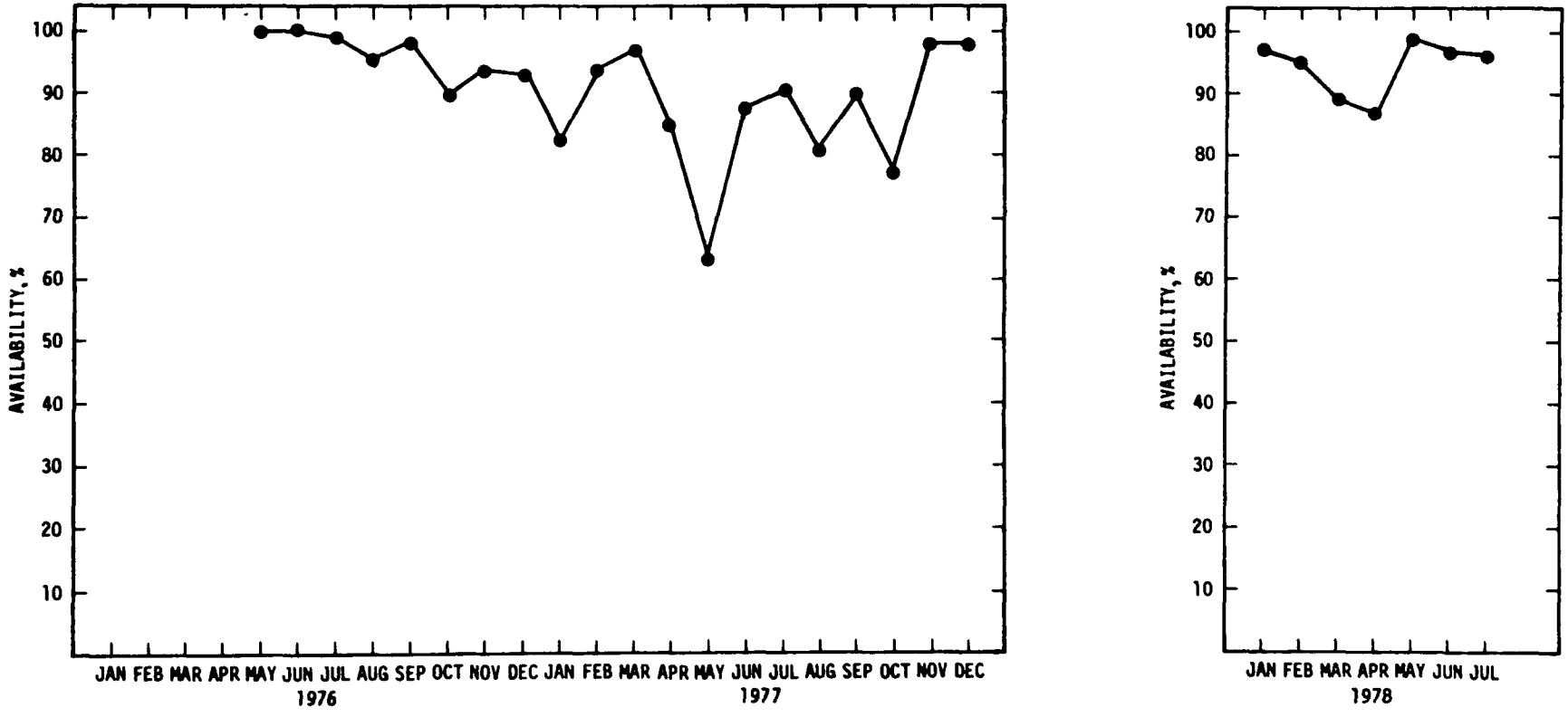

Figure 2-37. FGD system availability, Montana Power, Colstrip 2.

TABLE 2-42. SCRUBBER AVAILABILITY[a] FOR COLSTRIP 1 AND 2

Month/year	1	2
Jan. 1976	90	
Feb. 1976	98	
Mar. 1976	98	
Apr. 1976	74	
May 1976	97	100
Jun. 1976	0	100
Jul. 1976	93	99
Aug. 1976	95	96
Sep. 1976	89	98
Oct. 1976	80	90
Nov. 1976	63	94
Dec. 1976	74	93
Average	79	96
Jan. 1977	93	83
Feb. 1977	95	94
Mar. 1977		97
Apr. 1977	83	85
May 1977	85	63
Jun. 1977	87	88
Jul. 1977	85	91
Aug. 1977	93	81
Sep. 1977	93	90
Oct. 1977	96	77[b]
Nov. 1977	96	98
Dec. 1977	98	98
Average	91	87
Jan. 1978	96	97
Feb. 1978	100	95
Mar. 1978	92	89[c]
Apr. 1978	100	87[d]
May 1978	66[e]	99
Jun. 1978	76	97
Jul. 1978	96	96
Average	89	94

[a] In general, scrubber availability for Colstrip is the total module hours available divided by three, and multiplied by the hours of the month (multiplied by 100). Because of extensive scheduled outages, the values from May through August 1976 are based only upon days of operation.

[b] This value is a conservative estimate because the scrubbing system was only unavailable during part of boiler outage where scrubber maintenance was performed. This figure penalizes the scrubbing system for the entire outage.

[c] This value is based upon the 17 days of operation before the unit was shut down for a scheduled annual overhaul.

[d] This value is based upon 8 days of operation in April after a unit overhaul.

[e] This value is based upon 9.92 hours of operation on two scrubbers, while unit 1 was being brought back on line after completion of its annual overhaul. The ID fan motor was not available at unit startup on the 1A module.

The spent scrubbing solution is discharged to a recycle tank at the bottom of the spray towers, where the chemical reactions are completed. Flue gas cleaning wastes (unused reagent, sulfite/sulfate salts, fly ash) are discharged from the recirculation loop to a thickener, where the waste solids settle out. The overflow is returned to the process and used for preparation of the fly ash slurry. The thickener underflow has a maximum solids content of 40 percent and is piped to a vacuum thickener building, which houses two rotary drum vacuum filters for additional solids dewatering. Filter cake with a solids content of 70 percent is produced at 45 Mg/h (50 tons/h) and transported by conveyor to three 32-Mg (35-ton) off-the-road trucks, which haul it to a mine landfill for final disposal. Water recovered in the vacuum filter is also used for preparation of the fly ash slurry. During emergency conditions (mechanical malfunction and high flow rates), sludge from the vacuum filters can be piled outside the vacuum filter building for handling by front-end loaders and off-the-road trucks.

Milton R. Young 2 uses about 9 MW of its gross capacity to operate the sulfur dioxide control systems. Another 60 MW is required to operate auxiliary station equipment.

FGD system data are summarized in Table 2-43.

FGD system--Sulfur dioxide is controlled by FGD system consisting of two parallel spray towers and a chevron mist eliminator system near the top of each module. The wet gas is reheated with hot particulate-cleaned flue gas. Alkaline fly ash is fed to a silo from the ESP's of Units 1 and 2, and the lime slurry reagent is only used when necessary.

Process flow--Design criteria and operating parameters for the FGD system were determined during an extensive test program at a pilot plant with a gas flow of 2.4 m^3/s (5,000 acfm). The program was conducted by Minnkota Power Cooperative and the system suppliers in conjunction with the Minnesota Power and Light Company and the Grand Forks Energy Research Center.

TABLE 2-43. FGD SYSTEM DATA FOR MILTON R. YOUNG 2, CENTER, NORTH DAKOTA

Unit rating (gross), MW	477
(net), MW	408
Fuel	Lignite
Average fuel characteristics:	
Heating value, kJ/kg (Btu/lb)	15,000 (6,500)
Ash, %	8.0
Moisture, %	38
Sulfur, %	0.7
Chloride, %	
FGD process	Lime with alkaline fly ash
FGD system supplier	Arthur D. Little/Combustion Equipment Associates
Application	New
Status	Operational
Startup date:	
Initial	June 1977
Commercial	June 1978
Design removal efficiency:	
Particulate, %	99.6
Sulfur dioxide, %	75.0
Actual removal efficiency:	
Particulate, %	
Sulfur dioxide, %	
Water loop	Open
Total water makeup,	
liters/s per net MW	0.1
(gal/min per net MW)	1.56
Sludge disposal	Unstabilized sludge disposed of in a landfill

Boiler flue gas at 849 m^3/s (1.8 million acfm) and 171°C (34°F) first passes through the ESP. Inlet particulate loading ranges from 1.6 to 3.4 g/m^3 (0.7 to 1.50 gr/ft^3) and averages approximately 2.6 g/m^3 (1.15 gr/ft^3). The ESP is designed to remove 99.5 percent of particulates, so that the outlet loading averages 0.01 g/m^3 (0.005 gr/ft^3).

After the ESP, 85 percent of the flue gas is routed to the FGD system. When coal with a maximum sulfur content of 1.3 percent is burned, approximately 1900 ppm (dry) sulfur dioxide enters the FGD system. The flue gas contacts the scrubbing solution in a series of vertical spray zones. The scrubbing solution contains solubilized calcium oxide, magnesium oxide, and sodium oxide from the fly ash; lime is added to the solution to increase sulfur dioxide removal and pH control. At the maximum sulfur dioxide inlet concentration, the absorbers are approximately 85 percent efficient. Because 85 percent of the flue gas stream is treated, the total removal efficiency is approximately 70 percent; and the outlet sulfur dioxide concentration, 535 ppm (dry).

When the boiler fires coal with a maximum sulfur content of 1.3 percent, the FGD system operates at a liquid-to-gas (L/G) ratio of 11 liters/m^3 (80 gal/10^3 ft^3). The pH of the absorbent ranges from 6.4 to 6.5, and the level of suspended solids is 12 percent. Lime is added at 3.6 Mg/h (4 tons/h).

After passing the spray zone of the absorbers, the scrubbed gases enter chevron-type mist eliminators. A wash tray beneath each mist eliminator dilutes any entrainment to prevent plugging, scaling, and eventual restriction of gas flow. The wash trays are joined to separate recirculation loops and tanks to ensure that the wash water remains low in suspended solids and dissolved salts. To prevent plugging, sprays irrigate the mist eliminators with a mixture of makeup water and clarified liquor from each tray loop. Also, sprays flood the underside of the trays and the areas between each tray and the top recycle spray below it.

The scrubbed gas stream is reheated by mixing it with the bypassed flue gas stream at 171°C (340°F). This raises the temperature of the saturated scrubbed gas stream from 57 to 74°C (135 to 165°F); and the gases are discharged to the atmosphere through the stack.

Performance--FGD operations at Milton R. Young 2 began in September 1977 and were intermittent, mainly because of the severe winter weather. The freezing and rupture of many lines caused an outage during the first part of December for the installation of heat tracing in the liquid circuit. Other initial problems were reported with the guillotine gas dampers and flowmeters.

An emergency unit shutdown that occurred on December 5, 1977, as a result of turbine bearing damage, made it necessary to postpone compliance testing scheduled during late December or early January. The unit came back on line on February 21, 1978; but it was discovered that a forced-draft fan in the FGD system had an oil leak and a shaft alignment problem. The fan was taken off line for repairs, and one module of the FGD system was taken out of service. The repaired fan was placed back in service on April 10.

Other minor problems were encountered through September 1978. Large particles from the vacuum filter caused some rubber lining downstream to peel; modifications to correct this problem are being studied. Also, the guillotine damper chain drives were discovered to be underdesigned and had to be replaced.

Compliance testing took place at the unit during the week of June 5, 1978. Official results of the testing are not yet available.

2.4.2 Domestic Throwaway Sodium Scrubbing Units

The sodium scrubbing process has proven very successful for desulfurization of flue gas from coal-fired utility steam generators at specific sites.

Sodium scrubbing becomes cost effective where all of the following conditions apply:

- Emission regulations call for high sulfur dioxide removal efficency from flue gas containing a relatively low concentration of sulfur dioxide.
- Waste material (sodium salts) can be disposed of without the need for expensive pretreatment.
- The sodium reagent material (trona) can be obtained at a relatively low cost.

Plants that are in arid western regions near natural trona beds or mines and that burn low-sulfur western coal are ideal candidates for sodium scrubbing.

2.4.2.1 Nevada Power Company, Reid Gardner 1, 2, and 3[10-16]--

Reid Gardner Power Station of Nevada Power Company is a three-unit station (with plans for a fourth unit) in Clark County, near Moapa, Nevada. Reid Gardner 1, 2 and 3 are identical 125-MW (gross) units. Reid Gardner 4 is planned to be a 250-MW (gross) unit. The boilers of Reid Gardner 1, 2, and 3 were placed in service in 1965, 1968, and 1976, respectively. The FGD systems began operation in May 1974 (Units 1 and 2) and July 1976 (Unit 3).

The electric power generating facilities at Reid Gardner Power Station consist of Foster-Wheeler pulverized-coal-fired wet bottom steam generators with 125-MW (gross) turbine generators.

The coal burned at this station is medium-to-low-sulfur (0.5 to 1.0 percent sulfur) coal with an average heating value of 29,000 kJ/kg (12,450 Btu/lb) and ash content between 8.0 and 10.0 percent.

Primary particulate control is provided by Research-Cottrell multiclones that remove about 75 percent (actual) of the inlet particulate matter. Sulfur dioxide and secondary particulate control is provided by a sodium carbonate scrubber system supplied by Arthur D. Little and Combustion Equipment Associates; this system is designed to remove 90 percent of all sulfur dioxide and brings overall particulate removal efficiency to greater than 99 percent.

The scrubber effluent is neutralized to a pH of 7.5 with soda ash or trona and sent to a sealed settling pond for removal of fly ash and insolubles. The settling pond effluent is conveyed to a sealed evaporation pond, where all of the water is evaporated. The settling pond and the evaporation pond are both sealed with a clay slurry. There is an underground line from the settling pond to the evaporation pond.

Reid Gardner Station uses about 45 MW of its current gross generating capacity of 375 MW to operate the emissions control system and auxiliary station equipment.

FGD system data on Reid Gardner 1, 2, and 3 are summarized in Tables 2-44, 2-45, and 2-46.

FGD system--The FGD system consists of two parallel venturi scrubbers and a single-tray wash tower fed by the twin-throat venturi system. The venturi throats are constructed of Incoloy 825; the rest of the venturi system is made of rubber-lined carbon steel. The sieve plate in the absorber is 316L stainless steel. The outlet ducts are lined with Plasite 4004-S epoxy. The piping, pumps, and process vessels are rubber lined.

There is a horizontal mist eliminator that has radial vanes and is 15 cm (6 in.) deep by 9.1 m (30 ft) in diameter. The mist eliminator is near the top of the absorber tower.

Reheat of the wet cleaned gas is provided by an indirect steam coil reheat system constructed of carbon steel. This system heats ambient air and injects it into the exiting flue gas stream.

Reid Gardner 1, 2, and 3 share the same facility for reagent handling and storage. This facility includes storage and sand removal equipment, a blender, a mix tank, a shaker, and related equipment.

Process flow--The hot flue gas from the boiler passes through mechanical collectors (multiclones) that remove about 75 percent of the fly ash. The flue gas is then drawn through a 2,200-KW (3,000-hp) fan, splits into two streams, and enters the

TABLE 2-44. FGD SYSTEMS DATA FOR REID GARDNER 1, MOAPA, NEVADA

Unit rating (gross), MW	125
(net), MW	110
Fuel	Coal
Average fuel characteristics:	
Heating value, kJ/kg (Btu/lb)	29,000 (12,450)
Ash, %	8
Moisture, %	5.0-6.0
Sulfur, %	0.5-1.0
Chloride, %	0.05
FGD process	Sodium carbonate slurry
FGD system supplier	A.D. Little/Combustion Equipment Associates
Application	Retrofit
Status	
Startup date:	
Initial	March 1974
Commercial	April 1974
Design removal efficiency:	
Particulate, %	99.0
Sulfur dioxide, %	85.0
Actual removal efficiency:	
Particulate, %	99+
Sulfur dioxide, %	85-95
Water loop	
Total water makeup, liters/s per net MW (gal/min per net MW)	0.078 (1.24)
Sludge disposal	Unstabilized sludge disposed of in an onsite solar evaporation pond

TABLE 2-45. FGD SYSTEMS DATA FOR REID GARDNER 2, MOAPA, NEVADA

Unit rating (gross), MW	125
(net), MW	110
Fuel	Coal
Average fuel characteristics:	
Heating value, kJ/kg (Btu/lb)	29,000 (12,450)
Ash, %	8
Moisture, %	5.0-6.0
Sulfur, %	0.5-1.0
Chloride, %	0.05
FGD process	Sodium carbonate slurry
FGD system supplier	A.D. Little/Combustion Equipment Associates
Application	Retrofit
Status	
Startup date:	
Initial	March 1974
Commercial	April 1974
Design removal efficiency:	
Particulate, %	99.0
Sulfur dioxide, %	85.0
Actual removal efficiency:	
Particulate, %	99+
Sulfur dioxide, %	85-95
Water loop	
Total water makeup,	
liters/s per net MW	0.078
(gal/min per net MW)	(1.24)
Sludge disposal	Unstabilized sludge is disposed of in an onsite solar evaporation pond

TABLE 2-46. FGD SYSTEMS DATA FOR REID GARDNER 3, MOAPA, NEVADA

Unit rating (gross), MW	125
(net), MW	110
Fuel	Coal
Average fuel characteristics:	
Heating value, kJ/kg (Btu/lb)	29,000 (12,450)
Ash, %	8.0
Moisture, %	5.0 - 6.0
Sulfur, %	0.5 - 1.0
Chloride, %	0.05
FGD process	Sodium carbonate slurry
FGD system supplier	A.D. Little/Combustion Equipment Associates
Application	New
Status	
Startup date:	
Initial	June 1976
Commercial	July 1976
Design removal efficiency:	
Particulate, %	99.0
Sulfur dioxide, %	85.0
Actual removal efficiency:	
Particulate, %	99+
Sulfur dioxide, %	85-95
Water loop	Open
Total water makeup,	
liters/s per net MW	0.078
(gal/min per net MW)	(1.24)
Sludge disposal	Unstabilized sludge disposed of in an onsite solar evaporation pond

twin-throat venturi system. The gas is quenched with circulated scrubbing liquor sprayed from tangential nozzles on the walls of the venturis and exits into a sump, where the reduction in velocity causes the liquor droplets to fall. A liquid-to-gas ratio of 1.3 liters/m^3 (10 gal/10^3 ft^3) and a pressure drop of about 3.7 kPa (15 in.H_2O) are maintained in the venturi. The scrubbed gas at 540°C (130°F) tangentially enters the cylindrical droplet separator tower, rises through the tower, and bubbles through a single-sieve tray. The tray is flooded with clear water from the ash pond at 0.16 liters/m^3 (1.2 gal/10^3 ft^3) of gas. This tray is intermittently washed with fresh water sprayed against the tray bottom. The cleaned gas continues up the tower and passes through a single pass, horizontal mist eliminator with radial vanes. No mist eliminator washing is provided. The saturated gases are reheated by direct mixing with hot air, and the combined stream is discharged to the atmosphere from a 61-m (200-ft) stack.

The FGD system water is supplied from the ash handling pond. The water comes originally from wells and from the Muddy River. Trona, a low-grade ore containing 60 percent sodium carbonate, is normally used as the scrubbing agent. The sodium carbonate slurry is pumped to a clarifier, where insoluble impurities settle out. The clarified sodium carbonate liquor is injected into the venturi recirculation loop. The remainder of the makeup water (pH 11) is injected in the absorber circuit through the tray recycle tank. Blowdown from the venturi recycle tank is mixed with the alkaline clarifier underflow stream and adjusted to pH 7 in the postneutralization tank. Spent liquor from the postneutralization tank is pumped to a 24,300-m^2 (6-acre) ash settling pond, and the overflow from this pond goes to a 182,000-m^2 (45-acre) evaporation pond. No liquor is recycled to the modules from these ponds, and the pond evaporation rate is equal to the scrubber effluent discharge rate.

Figure 2-38 shows a simplified process flow diagram of a Reid Gardner FGD system.

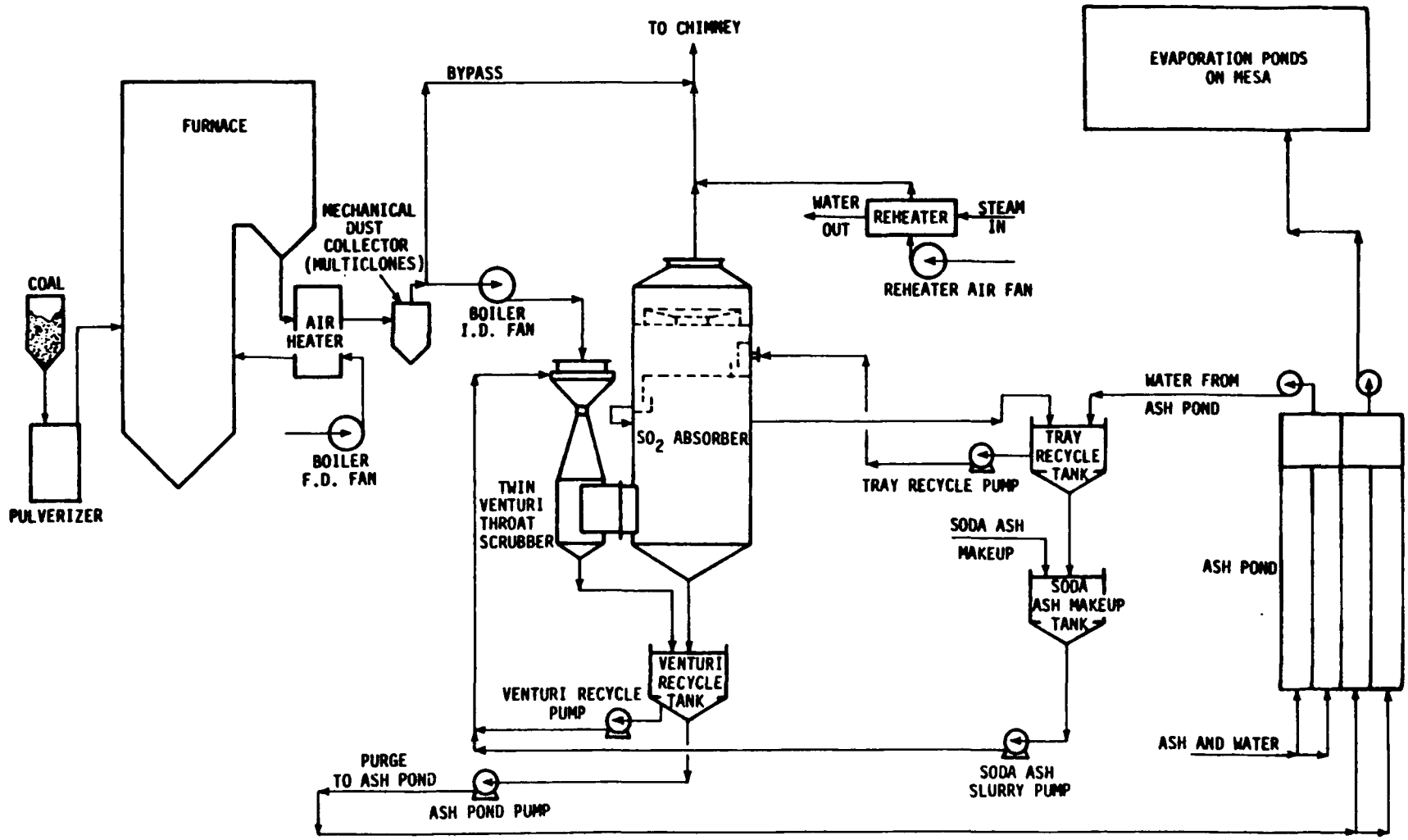

Figure 2-38. Process diagram of an FGD system, Nevada Power Co., Reid Gardner Station.

Performance--There were many problems during the startup of the FGD systems. These problems included improper guillotine damper operations, liquid level control difficulties resulting from undersized control valves (Units 1 and 2), accumulation of rubber fragments in the system from the rubber linings, fly ash plugging in the reject slurry and postneutralization lines, plugging in the instrument sensing line, plugging in the water control valves of the venturis, and fly ash interference with pH meter electrodes. The units also experienced corrosion where rubber lining failures occurred and flaking of Ceilcote liner in the scrubber outlet ducting. Another minor problem was excessive leaking in the recirculation pump seals.

The problems with the guillotine dampers were resolved by installing redesigned drive train components. The underdesigned liquid level control valves were replaced where necessary. The water control valves of the venturis were flushed every shift to eliminate plugging.

After shakedown and debugging of the FGD systems were largely completed, performance improved, particularly at Reid Gardner 2 and 3. Tables 2-47, 2-48, and 2-49 list the performance factors for Reid Gardner 1, 2, and 3 from startup to August 1978. Figures 2-39, 2-40, and 2-41 show system availabilities.

The Reid Gardner Power Station emissions control systems were designed for overall particulate and sulfur dioxide removal efficiencies of 99.0 and 85 percent, respectively. Actual particulate removal efficiencies have exceeded 99 percent; and actual sulfur dioxide removal is typically 84 percent, although efficiencies as high as 95 percent have been achieved by increasing soda ash makeup.

2.4.3 Domestic Chiyoda Thoroughbred 121 Systems[17,18]

The first domestic Chiyoda Thoroughbred 121 system began operation as a prototype unit on August 30, 1978, at the Scholz Power Plant of Gulf Power. This unit uses a limestone slurry process that is a second generation innovation of the CT-101

TABLE 2-47. FGD PERFORMANCE DATA, NEVADA POWER CO., REID GARDNER 1[a]

Month/year	Availability, %	Operability, %	Reliability, %	Utilization, %
Jan. 1975	65			
Feb. 1975	95			
Jul. 1975		85		
Sep. 1975		78		78
Oct. 1975		60		14
Jan. 1976	81	29	57	25
Feb. 1976	91	78	89	75
Mar. 1976	99	72	99	39
Apr. 1976	15	91	100	13
Aug. 1976	97	75	94	49
Sep. 1976	95	97	95	89
Oct. 1976	98	96	98	87
Nov. 1976	87	84	81	71
Dec. 1976	93	92	88	80
Average	84	90	79	59
Jan. 1977	72	67	87	59
Feb. 1977[b]	0	0	0	0
Mar. 1977[b]	0	0	0	0
Apr. 1977[c]	0	0	0	0
May 1977[c]	0	0	0	0
Jun. 1977	47	45	44	44
Jul. 1977	99	99	99	99
Aug. 1977	19	21	19	19
Sep. 1977	84	73	69	35
Oct. 1977	99	99	99	85
Nov. 1977	79	82	79	78
Dec. 1977	85	82	83	71
Average	49	47	48	41
Jan. 1978	56	68	69	56
Feb. 1978	97	75	94	43
Mar. 1978	28	58	58	28
Apr. 1978	100	97	100	75
May 1978	97	92	96	78
Jun. 1978	89	89	100	89
Jul. 1978	100	99	100	99
Aug. 1978	94	93	94	89
Sep. 1978	99	99	97	87
Average	84	86	90	72

[a] No data are available for April through June 1975, August 1975, or November through December 1975; a boiler outage occurred from May through July 1976.

[b] Rubber liner failure in the FGD system caused an outage.

[c] Scrubber liner failure caused an outage; the failure occurred because of a faulty boiler air preheater.

TABLE 2-48. FGD PERFORMANCE DATA, NEVADA POWER CO., REID GARDNER 2[a]

Month/year	Availability, %	Operability, %	Reliability, %	Utilization, %
Feb. 1975		90		
Jul. 1975		85		
Sep. 1975		77		69
Oct. 1975		87		62
Nov. 1975		99		83
Jan. 1976	72	66	66	62
Feb. 1976	84	86	86	83
Mar. 1976	67	60	62	53
Apr. 1976	85	77	83	68
May 1976	99	83	98	79
Jul. 1976	91	81	96	57
Aug. 1976	95	75	94	71
Sep. 1976	94	96	94	91
Oct. 1976	95	95	95	88
Nov. 1976	52	58	51	50
Average	83	78	83	70
Feb. 1977	93	75	88	56
Mar. 1977	92	86	97	76
Apr. 1977	95	95	95	95
May 1977	99	85	98	60
Jun. 1977	94	93	94	83
Jul. 1977	40	41	40	40
Aug. 1977	87	91	87	79
Sep. 1977	74	67	71	64
Oct. 1977	76	80	76	80
Nov. 1977	86			
Dec. 1977[b]	0	0	0	0
Average	76	71	75	63
Jan. 1978	67	74	67	67
Feb. 1978	93	92	92	87
Mar. 1978	98	89	97	80
Apr. 1978	100	98	100	44
May 1978	100	100	100	97
Jun. 1978	100	92	100	92
Jul. 1978	80	82	79	74
Aug. 1978	81	93	82	81
Sep. 1978	100	100	97	94
Average	91	91	90	80

[a] No data are available for March through June 1975, December 1975, or June 1976; boiler outages occurred in December 1976, January 1977, and November 1977.

[b] ID fan was repaired.

TABLE 2-49. FGD PERFORMANCE DATA, NEVADA POWER CO., REID GARDNER 3

Month/year	Availability, %	Operability, %	Reliability, %	Utilization, %
Jul. 1976	45	46	70	42
Aug. 1976	56	43	50	43
Sep. 1976	49	46	46	44
Oct. 1976	22	29	21	21
Nov. 1976	28	80	29	29
Dec. 1976	99	97	99	97
Average	50	57	53	46
Jan. 1977	98	98	98	91
Feb. 1977	81	74	72	63
Mar. 1977	44	51	52	44
Apr. 1977	86	85	85	83
May 1977	63	26	21	16
Jun. 1977	98	63	64	62
Jul. 1977	73	73	73	73
Aug. 1977	70	63	63	50
Sep. 1977	90	90	99	90
Oct. 1977	99	90	99	61
Nov. 1977	89	88	89	87
Dec. 1977	88	92	96	93
Average	82	74	76	64
Jan. 1978	100	100	100	100
Feb. 1978	96	95	95	88
Mar. 1978	97	97	97	96
Apr. 1978	97	89	97	87
May 1978	97	77	96	66
Jun. 1978	100	96	96	95
Jul. 1978	100	80	100	78
Aug. 1978	98	98	98	97
Sep. 1978	100	100	97	32

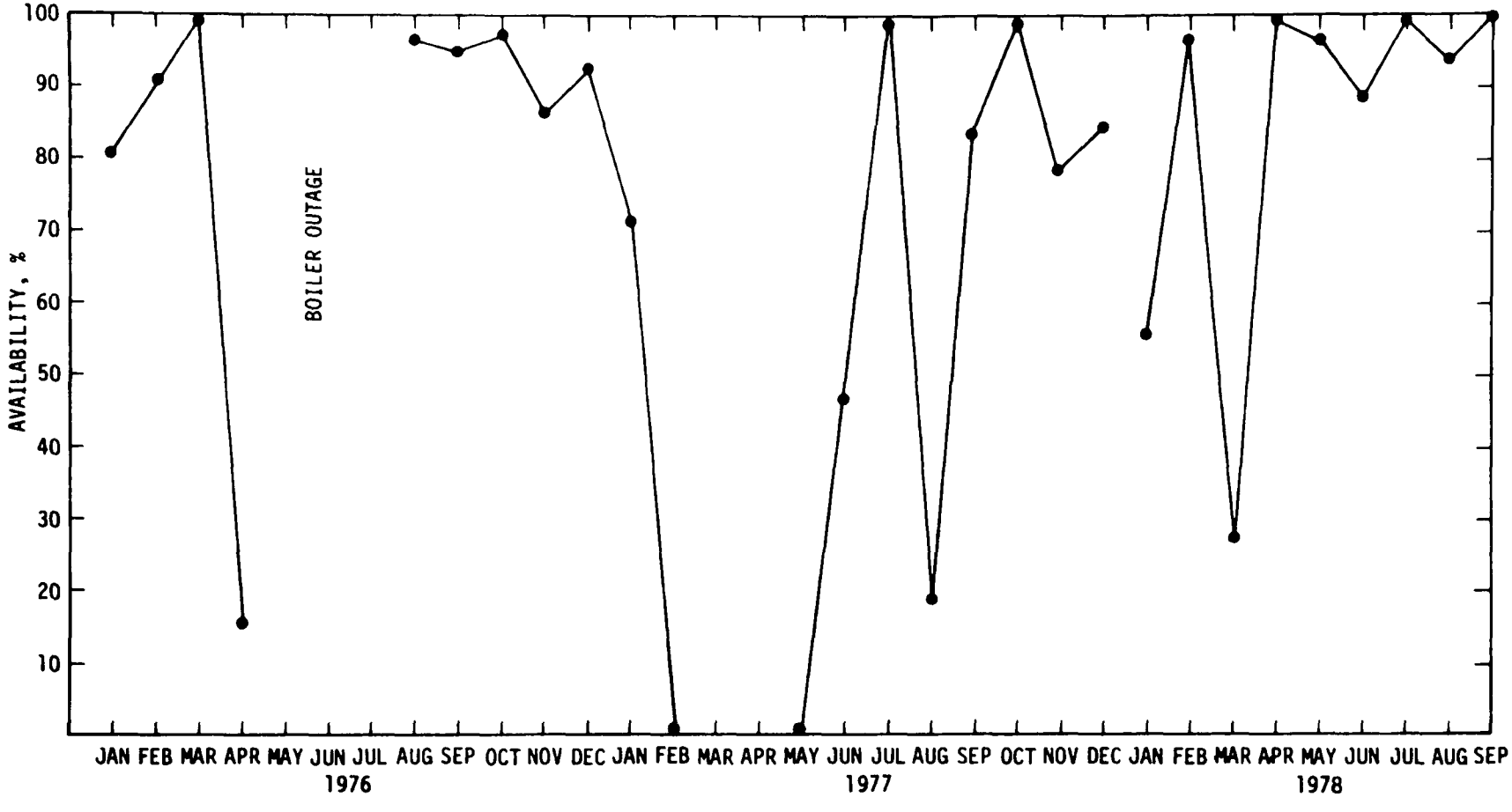

Figure 2-39. FGD system availability, Nevada Power Co., Reid Gardner.

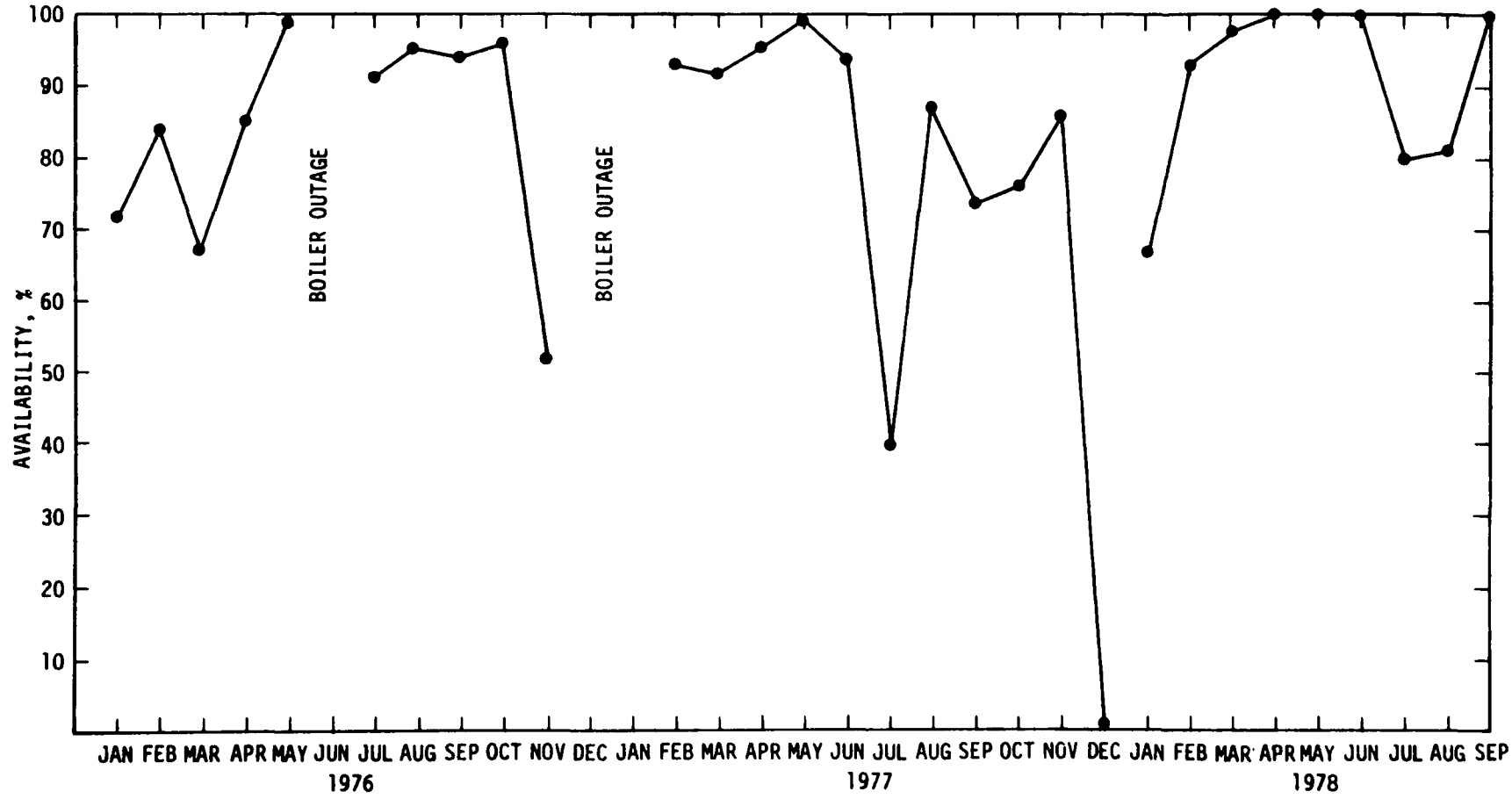

Figure 2-40. FGD system availability, Nevada Power Co., Reid Gardner.

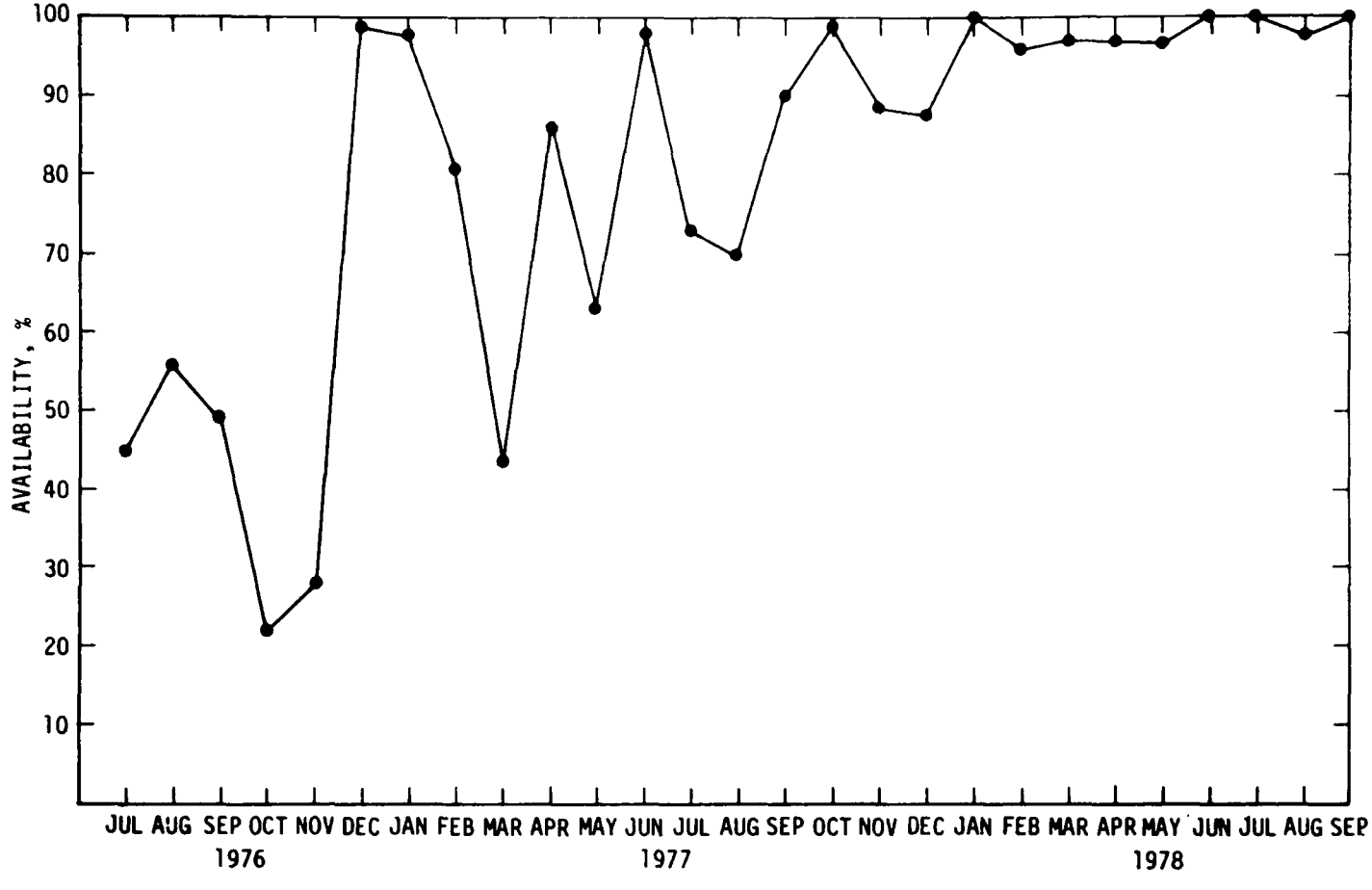

Figure 2-41. FGD system availability, Nevada Power Co., Reid Gardner 3.

process previously described. Laboratory experiments and pilot plant operations utilizing this process were first undertaken at the Kawasaki Research and Development Center in Japan. The economic recession in Japan and the applicability of the process to coal-fired boilers prompted Chiyoda International to install a prototype plant in the United States. All the equipment for the prototype unit was made by modifying the equipment left from the CT-101 pilot plant studies done at the Scholz Power Station.

2.4.3.1 Gulf Power, Scholz 1 and 2[19,20]--

The Scholz Power Plant is located in Chattahoochee, Florida, approximately 64.4 km (40 miles) northwest of Tallahassee. The plant consists of two steam electric generating units that provide a combined net generating capacity of 80 MW. The gross rating of each unit is 47 MW. Both units have pulverized-coal-fired, dry bottom boilers manufactured by Babcock and Wilcox. A flue gas flow of 50 m^3/s (106,000 acfm) is developed by each. The coal burned at the plant has an average heating value of 29,075 kJ/kg (12,500 Btu/lb) sulfur content of 2.5 percent, ash content of 11 percent, and moisture content of 5 percent. Coals with various sulfur contents, however, will be burned during prototype operations. Each unit burns an average of 17.2 Mg (19 tons) of coal per hour. A Buell cold-side electrostatic precipitator (ESP) designed for 99.5 percent removal of particulate matter is located immediately downstream of each boiler. The temperature of the flue gas exiting the ESP ranges from 135 to 168°C (275 to 335°F). The ESP can be selectively de-energized to vary the particulate loading to the FGD system during experimental operations.

FGD system--The Thoroughbred 121 process developed by Chiyoda International utilizes a limestone slurry absorbent with a new jet bubbling reactor illustrated in Figure 2-42. The reactor is constructed of stainless steel and is 7 m (24 ft) in diameter. The flue gas enters a relatively shallow liquid layer (the jet bubbling zone) through vertical spargers. The open ends

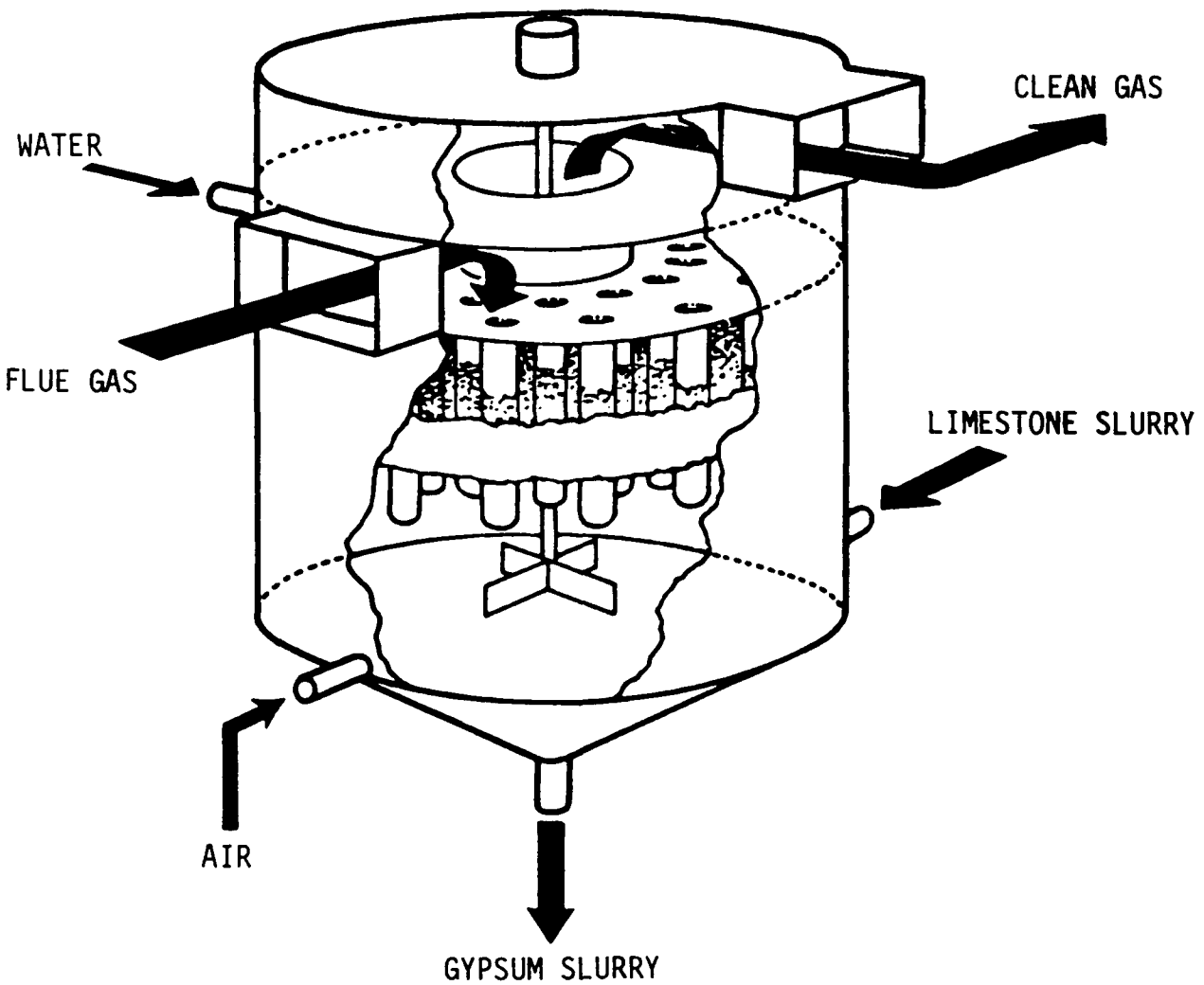

Figure 2-42. Jet bubbling reactor.

of these spargers are submerged from 10 to 41 cm (4 to 16 in.) below the liquid surface. The velocity of the flue gas ranges from 5 to 20 m/s (16 to 66 ft/s) and causes it to entrain the surrounding liquid, so that a jet bubbling or froth layer is created. The resulting large gas-liquid interface provides effective transfer of sulfur dioxide. The gas contact time ranges from 0.5 to 1.5 seconds.

In the reaction zone (immediately below the jet bubbling zone), the liquid is moderately agitated by air bubbling and mechanical agitation. Oxidizing air is introduced into the reactor by air spargers at levels from 200 to 300 percent those of stoichiometric requirements. Excess oxidizing air, sufficient residence time, and adequate suspended solids promote gypsum crystal growth. The gypsum settles to the bottom of the tank at a minimum rate of 5 cm/s (10 ft/h), and a bleed stream of gypsum is continuously drawn off. The gypsum is discharged from the reactor in a slurry containing from 10 to 25 percent solids. The slurry is pumped to a gypsum stack where the solids settle out by gravity, and the supernatant (stack overflow) is pumped back to the process.[21,22]

There is a vertical, two-stage, double-pass chevron mist eliminator. The scaling problems frequently encountered with mist eliminators of conventional limestone systems should be avoided with the jet bubbling reactor because of the high gas velocity and resulting small amount of mist produced. Maintenance for the mist eliminator will include a 1-minute wash of the first stage every 2 weeks.

The scrubbed gases exit through a 23-m (76-ft) fiber-reinforced plastic stack. The outlet temperature is 54°C (130°F). No reheat is provided.

Additional system design information is presented in Table 2-50.[23]

Process chemistry--The chemistry of this new process is similar to that of conventional limestone scrubbing processes,

TABLE 2-50. FGD SYSTEMS DATA FOR SCHOLZ 1 AND 2, CHATTAHOOCHEE, FLORIDA

Unit rating (gross), MW (net), MW	47 (each) 40 (each)
Fuel	Coal
Average fuel characteristics:	
Heating value, kJ/kg (Btu/lb)	29,075 (12,500)
Ash, %	11.0
Moisture, %	5.0
Sulfur, %	2.5 (5.0 maximum)
Chloride, %	
FGD process	Limestone
FGD system supplier	Chiyoda International
Application	Prototype (retrofit)
Status	
Startup date:	
Initial	August 1978
Commercial	
Design removal efficiency:	
Particulate, %	99.5
Sulfur dioxide, %	90.0+
Actual removal efficiency:	
Particulate, %	
Sulfur dioxide, %	
Water loop	Closed
Total water makeup, liters/s per net MW (gal/min per net MW)	
Sludge disposal	FGD waste in the form of gypsum is stacked in the existing onsite pond

except that virtually all sulfite produced in the reactor is forcibly oxidized to sulfate. Only trace amounts of sulfite remain after the oxidation process.

The overall reaction equation for the system is:

$$SO_2 + CaCO_3 + 1/2\ O_2 + 2H_2O \rightleftarrows CaSO_4 \cdot 2H_2O + CO_2$$

The principal chemical reactions in the jet bubbling (froth) zone are:

$$SO_2(\uparrow) \rightleftarrows SO_2(aq)$$

$$SO_2(aq) + H_2O \rightleftarrows H_2SO_3$$

$$H_2SO_3 \rightleftarrows HSO_3^- + H^+$$

$$HSO_3^- \rightleftarrows SO_3^{--} + H^+$$

$$SO_3^{--} + 1/2\ O_2\ (aq) \rightleftarrows SO_4^{--}$$

$$CaCO_3(\downarrow) \rightleftarrows CaCO_3(aq)$$

$$CaCO_3(aq) + H^+ \rightleftarrows Ca^{++} + HCO_3^-$$

$$HCO_3^- + H^+ \rightleftarrows H_2O + CO_2$$

$$Ca^{++} + SO_4^{--} \rightleftarrows CaSO_4$$

$$CaSO_4 + 2H_2O \rightleftarrows CaSO_4 \cdot 2H_2O\ (\downarrow)$$

The reaction equations in the reaction (liquid) zone are:[24]

$$O_2(g) \rightleftarrows O_2(aq)$$

$$SO_3^{--} + 1/2\ O_2(aq) \rightleftarrows SO_4^{--}$$

$$CaCO_3(\downarrow) \rightleftarrows CaCO_3(aq)$$

$$CaCO_3(aq) + H^+ \rightleftarrows Ca^{++} + HCO_3^-$$

$$Ca^{++} + SO_4^{--} + 2H_2O \rightleftarrows CaSO_4 \cdot 2H_2O\ (\downarrow)$$

$$Ca^{++} + SO_4^{--} \rightleftarrows CaSO_4$$

$$CaSO_4 + 2H_2O \rightleftarrows CaSO_4 \cdot 2H_2O\ (\downarrow)$$

<u>Process flow</u>[25]--A schematic process flow diagram is presented in Figure 2-43. After the ESP, the flue gas flows into the jet bubbling reactor at a typical dry particulate loading of

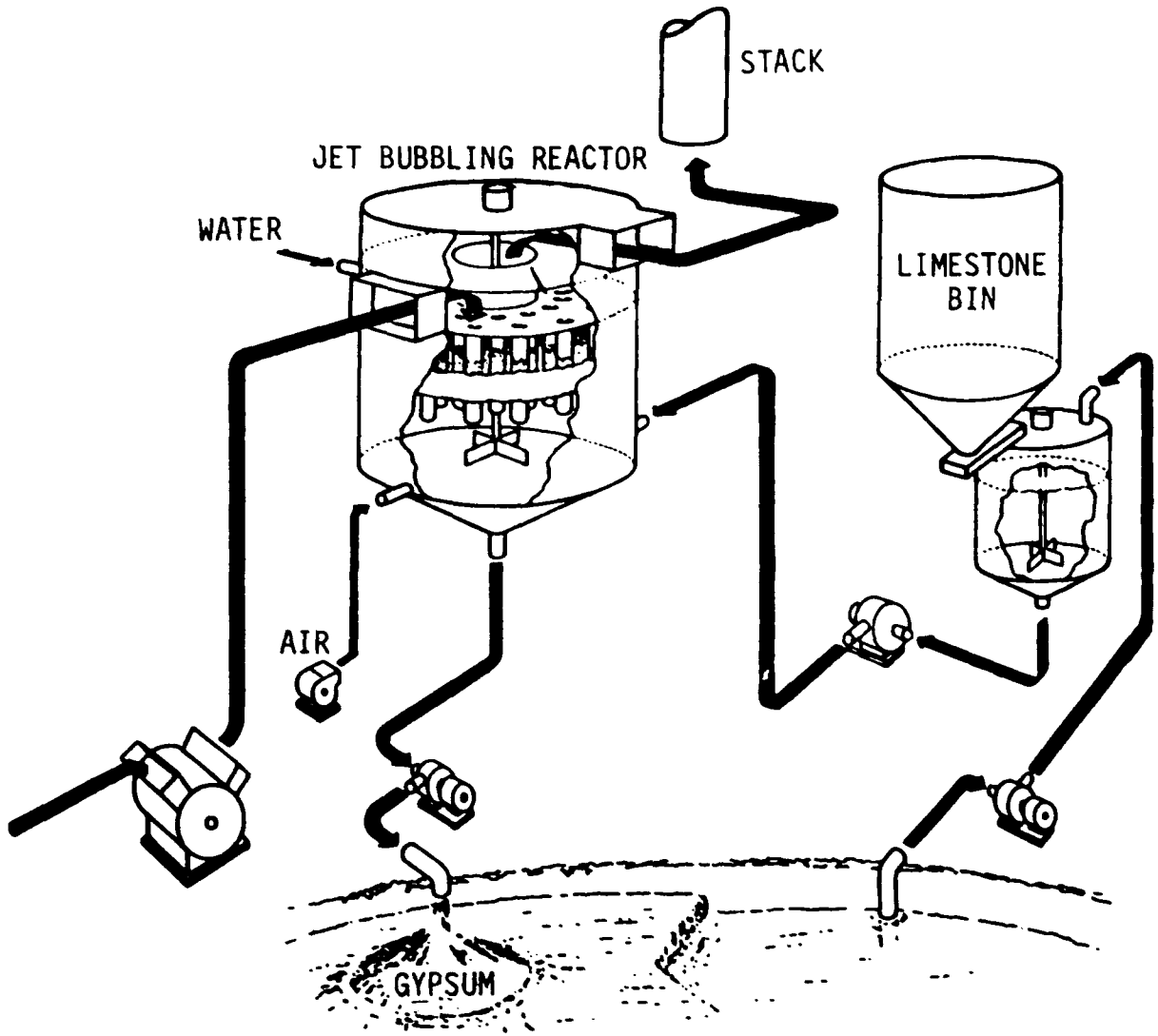

Figure 2-43. Process flow diagram of prototype plant, Gulf Power Co., Sholz Station.

0.09 g/m^3 (0.04 gr/ft^3). The FGD system is designed to handle 50 percent of the flue gas from either boiler, or 25 m^3/s (53,000 acfm). The system has an equivalent electrical capacity of 23 MW. The temperature of the gas as it enters the reactor ranges from 135 to 168°C (275 to 335°F). In the reactor, it is quenched with water and sparged into the limestone absorbent through an array of vertical sparges to produce the froth layer. Sulfur dioxide is absorbed in this layer to produce sulfite, which is completely oxidized to sulfate. The scrubbed gases pass through the chevron-type mist eliminator and are discharged from the 23-m (76-ft) fiber-reinforced plastic stack at 54°C (130°F). This prototype unit is designed to remove more than 90 percent of the sulfur dioxide from the flue gas.

Performance[26,27]--Operation of this experimental unit began on August 30, 1978. An availability of greater than 99 percent since startup has been reported. No problems have yet been encountered. The sulfur dioxide removal efficiency of the system has averaged approximately 93 percent from startup through the end of September.

2.4.4 Domestic Dry Phase Collection Systems

Integrated processes designed to remove two or more pollutants simultaneously from the flue gas of a coal-fired boiler have commanded considerable interest because of economic and operational reasons. The success of fabric filters in removing particulates from the flue gases of coal-fired boilers has motivated investigations into the feasibility of using the same equipment to control both particulates and sulfur dioxide. Tests have been conducted with the injection of dry powdered nahcolite (a mineral form of sodium bicarbonate) into the flue gas stream and onto fabric filter bags for the removal of sulfur dioxide. The bicarbonate, when heated, gives off water and carbon dioxide to form a porous carbonate which has a large specific surface area and reacts readily with sulfur dioxide. Nahcolite was chosen as the source of bicarbonate because there are large

reserves, principally in shale deposits in northern Colorado. It was anticipated that nahcolite could be mined at a relatively low cost and delivered as a usable raw product with a purity between 70 and 80 percent.

During test in mid-1974 at the Nucla Station of Colorado-Ute Electric Association, dry nahcolite powder was injected into the flue gas stream and onto existing fabric filter bags. These tests provided performance data for full-scale operation of a small power plant. The sulfur dioxide removal efficiency was approximately 69 percent; and the utilization of the alkali content of the injected material, 56 percent. Figure 2-44 illustrates the process flow of a dry phase nahcolite injection system.

Built in features of the fabric filter particulate collection hoppers and the method of alkali injection made nahcolite drop out roughly 28 percent and thus significantly reduced the effective sorbent utilization. Test data suggested that there should be an optimum condition for injection of alkali which would promote maximum utitlization of absorbent.

In November 1974, the Otter Tail Power Company conducted five tests to determine whether or not a fabric filter would be feasible not only for the collection of solid particulates from lignite, but also for sulfur dioxide removal. Tests were performed at a single point in the duct at the inlet to a cold-side precipitator serving Unit 3 at the Hoot Lake Station in Fergus Falls, Minnesota. A pilot fabric filter with an air-to-cloth ratio of 2.3:1 was used. The filter could handle 0.002 m^3/s (5 acfm) of gas. Various precoat materials consisting of lignite ash (collected from precipitator hoppers) and alkaline additives (nahcolite, calcium oxide, and calcium hydroxide) were tried.

The program was under the general supervision of the Otter Tail Power Company and was directed by Wheelabrator-Frye, Inc. Members of the Grand Forks Office of the U.S. Bureau of Mines (now within the U.S. Department of Energy) measured fly ash

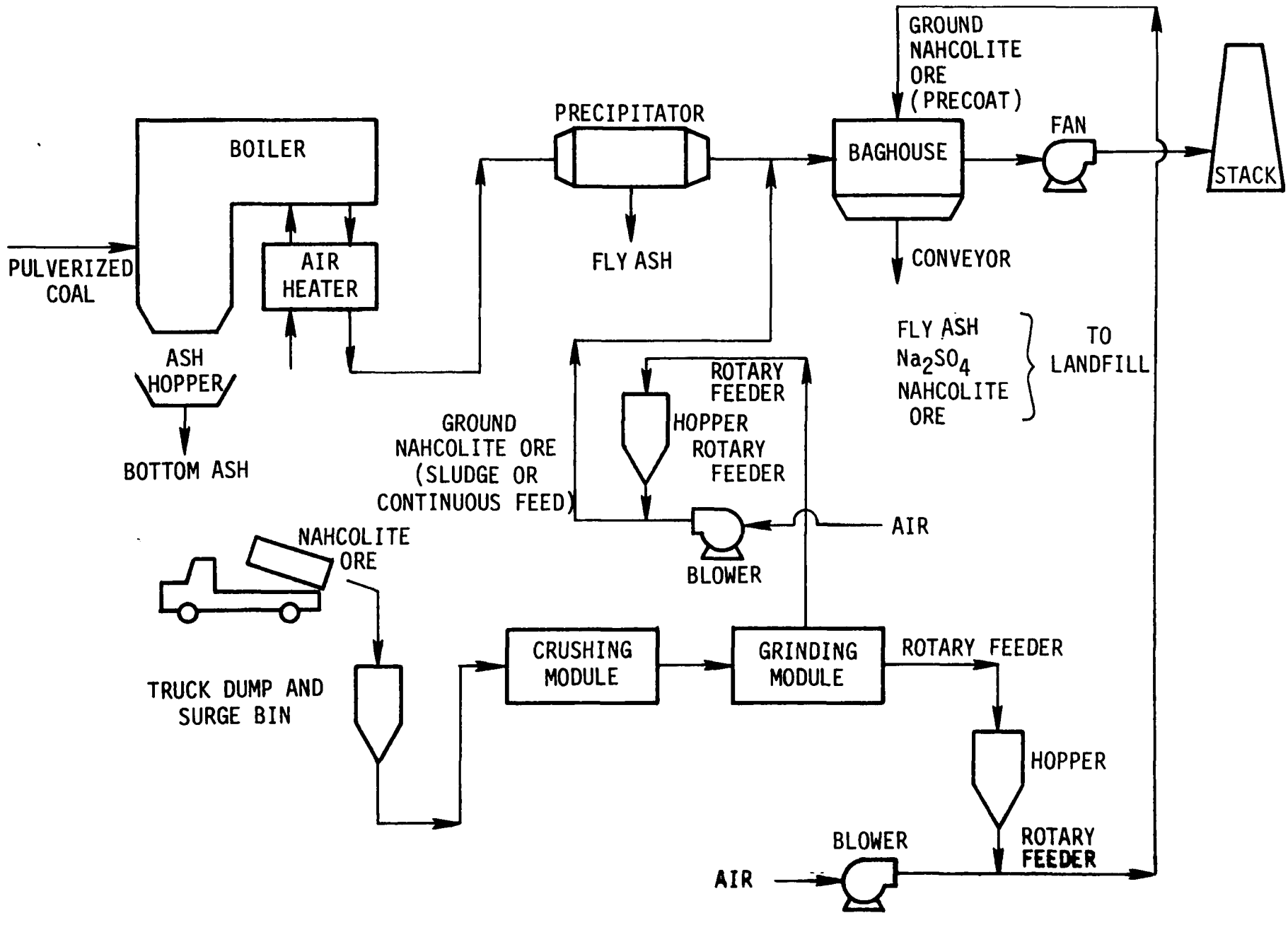

Figure 2-44. Dry phase collection with nahcolite injection.

particulate concentration, and Wheelabrator-Frye conducted the field testing of the pilot baghouse.

Sulfur dioxide removal efficiency was 94 percent at Hoot Lake 3 immediately after the fabric filter was precoated with nahcolite; average efficiency was 46 percent. Precoating with calcium oxide and calcium hydroxide were less efficient. The Nucla test results and other factors motivated the Otter Tail Power Company and its partners to undertake further tests with the dry powder injection. In late 1976, a relatively large pilot program was instituted at the Leland Olds plant of the Basin Electric Power Cooperative. The aim of the test was to obtain data on fabric filter performance under conditions similiar to those that will exist at the 400-MW (net) lignite fired Coyote Station of Otter Tail Power that is now slated to begin operation in 1981. A description of the pilot plant facility is provided below.[28,29]

2.4.4.1 Basin Electric Power Cooperative, Lelands Olds Pilot Plant[30-37]

The initial pilot installation at the Leland Olds Power Station burned lignite in a boiler with a cyclone furnace similar to the future Coyote installation. The installation consisted of two modules, each with six full-size filter bags. Each bag was 29.2 cm (11.5 in.) in diameter and 9 m (30 ft) tall. The bags were arranged to receive a slipsteam of flue gases at approximately 1.4 m^3/s (3000 acfm). The program was based principally on the work done by Wheelabrater-Frye at the Nucla Station, but was modified on the basis of experience by the Superior Oil Company, the nahcolite supplier.

The results were better than those of the Nucla tests. The percentage of sulfur dioxide removed in relation to the percentage of sorbent utilized (the R:U factor) increased from 69:56 at Nucla first to 83:77 and latter to 90:60 at Lelands Olds. As the later test shows, the sulfur dioxide removal efficiency of 90 percent was achieved at some sacrifice in sorbent utilization.

Steadily advancing techniques improved performance of the nahcolite dry powder additive system at Leland Olds. For low-to-medium-sulfur coals, this system appeared to offer simple, low cost operation at low investment. There was, however, growing concern regarding the availability of the nahcolite reactant.

As late as the spring of 1977, the three potential suppliers of nahcolite were experiencing various difficulties in meeting government requirements for excavation in the nahcolite resource areas of northern Colorado. These difficulties prompted further review of available options.

It was found that using a spray dryer would eliminate the exclusive need for nahcolite. Thus, Wheelabrator-Frye and Atomics International undertook a joint test program at Lelands Olds with a two-stage system combining a spray dryer and fabric filter. The spray dryer was the first stage; it accomplished alkali injection, as well as primary sulfur dioxide removal. The downstream fabric filter functioned as a second stage sulfur-dioxide absorber and flue gas particulate collector. The pilot plant facilities at Leland Olds were modified to accommodate the operation of a spray dryer 2 m (7 ft) in diameter with the existing fabric filter modules. Figure 2-45 shows a simplified process flow diagram of the two-stage dry scrubber/sulfur dioxide absorber.

The test program had three main aims. The first was to demonstrate that the process was a viable method of desulfurizing flue gases from a lignite-fired utility boiler with a cyclone furnace. The second aim was to compare the effectiveness of soda ash, trona, and the less costly slurries of lime, limestone, and fly ash. Finally, a week-long, round-the-clock endurance test was planned to demonstrate the continuous operability of the spray dryer/fabric filter system and to uncover any limitations of extended operation.

A 2-month program included tests with sodium carbonate at flue gas flows between 0.5 and 2.0 m^3/s (1000 and 4500 acfm) and sulfur dioxide concentrations from 400 to 2300 ppm. Sodium car-

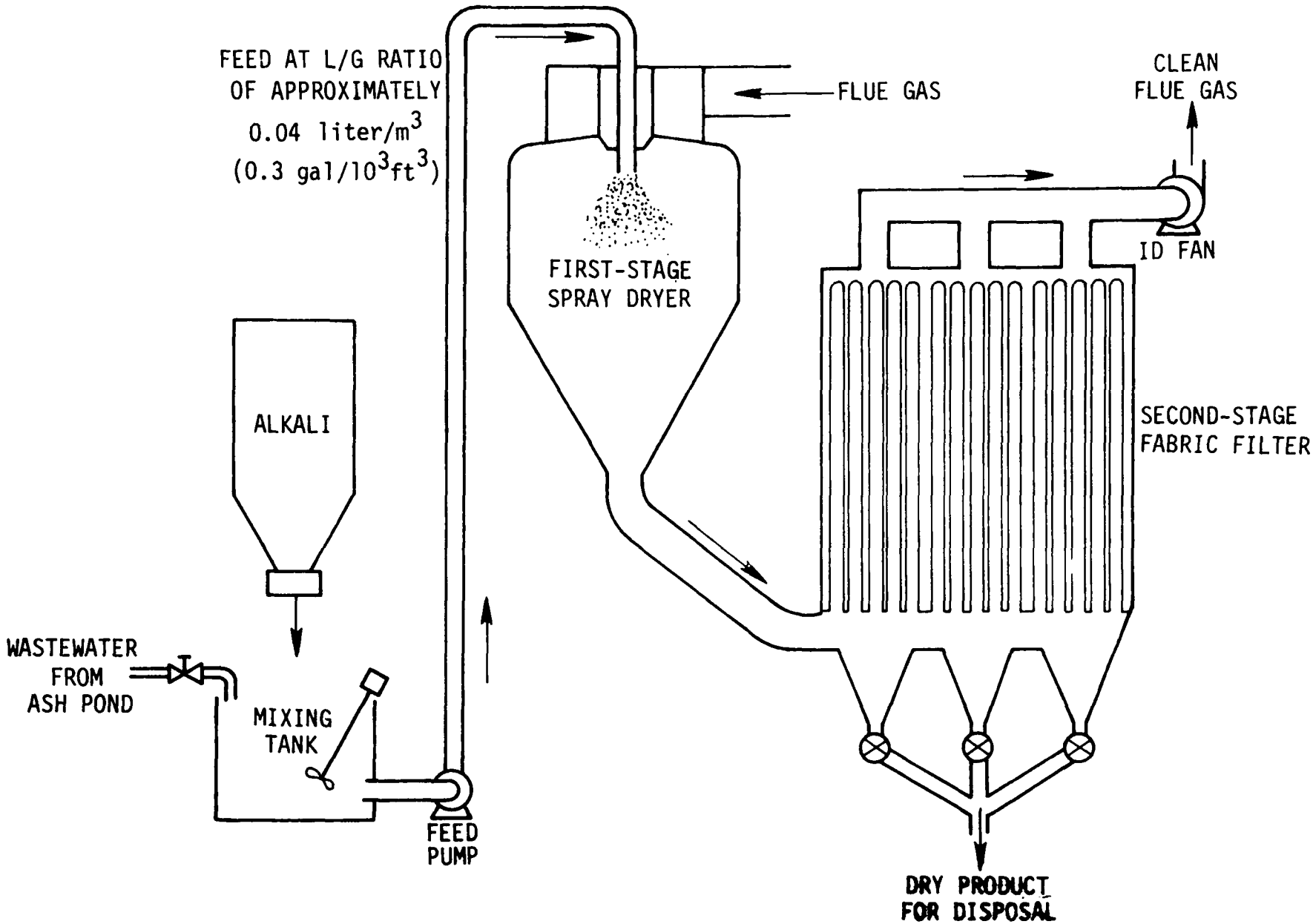

Figure 2-45. Process flow diagram of two-stage dry scrubber/SO_2 absorber.

bonate solutions were fed to the spray dryer at varying rates to produce temperature drops across the spray dryer between 50°C (90°F) and 90°C (170°F). Actual operating temperature of the fabric filter were between 74°C (165°F) and 110°C (230°F). No degradation of sulfur dioxide removal efficiency was observed; nor were any serious equipment shortcomings uncovered during the week-long test of continuous operation.

A comparison of nahcolite injection with two-stage soda ash removal is shown in Table 2-51.

As a result of the pilot testing, Wheelabrator Frye and Atomics International have been awarded a turnkey contract for a sulfur dioxide and particulate removal system at the 410-MW Coyote 1 Station of the Otter Tail Power Company. The gas flow at Coyote 1 is 892 m^3/s (1,890,000 acfm). The system will use aqueous carbonate and is expected to begin operation in May 1981. Montana Dakota Utilities will be the station operator.

After completion of the Wheelabrator Frye/Atomics International program, testing was conducted at Lelands Olds by Carborundum using a DeLaval separator. The system employs a baghouse and a dry scrubber in combination with a wet slurry sorbent. The wet sorbent is first atomized and then mixed with the flue gas to combine with the sulfur dioxide. The heat of the gas quickly dries the newly formed waste product, which is captured with other particulates in the baghouse. Either calcium or sodium sorbents can be used; the choice depends on site-specific requirements. The tests with this system were conducted on gas with a flow from 5 to 7 m^3/s (10,000 to 12,000 scfm). Figure 2-46 illustrates the Carborundum/DeLaval system.[34]

A third set of tests at Leland Olds was undertaken by Joy Manufacturing with the Niro Atomizer spray absorption system. This system can be used for removal of hydrogen chloride and other gases, as well as sulfur dioxide. The process is similar to conventional spray drying techniques and is outlined in Figure 2-47. It involves a feed preparation system that depends upon the absorbent utilized, a transportation system for delivering

TABLE 2-51. DRY POWDER NAHCOLITE INJECTION VERSUS TWO-STAGE SODA ASH SYSTEM[a]

Fabric filter only (dry powder Nahcolite injection)[b]

Stoichiometric ratio	SO_2 removal, %			Utilization, %		
	Spray dryer	Fabric filter	Total	Spray dryer	Fabric filter	Total
0.5		42	42		85	85
1.0		74	74		74	74
1.5		89	89		59	59

Spray dryer/filter (two-stage soda ash)[c]

Stoichiometric ratio	SO_2 removal, %			Utilization, %		
	Spray dryer	Fabric filter	Total	Spray dryer	Fabric filter	Total
0.5	40	8	48	80	16[d]	96
1.0	82	10	92	82	10[e]	92
1.5	86	12	98	57	8[f]	65

[a] Sulfur dioxide concentration from 800 through 2800 ppm.

[b] Temperature entering fabric filter was approximately 143°C (290°F).

[c] Temperature entering fabric filter was approximately 93°C (200°F).

[d] Actual utilization of unreacted absorbent is 80%.

[e] Actual utilization of unreacted absorbent is 48%.

[f] Actual utilization of unreacted absorbent is 19%.

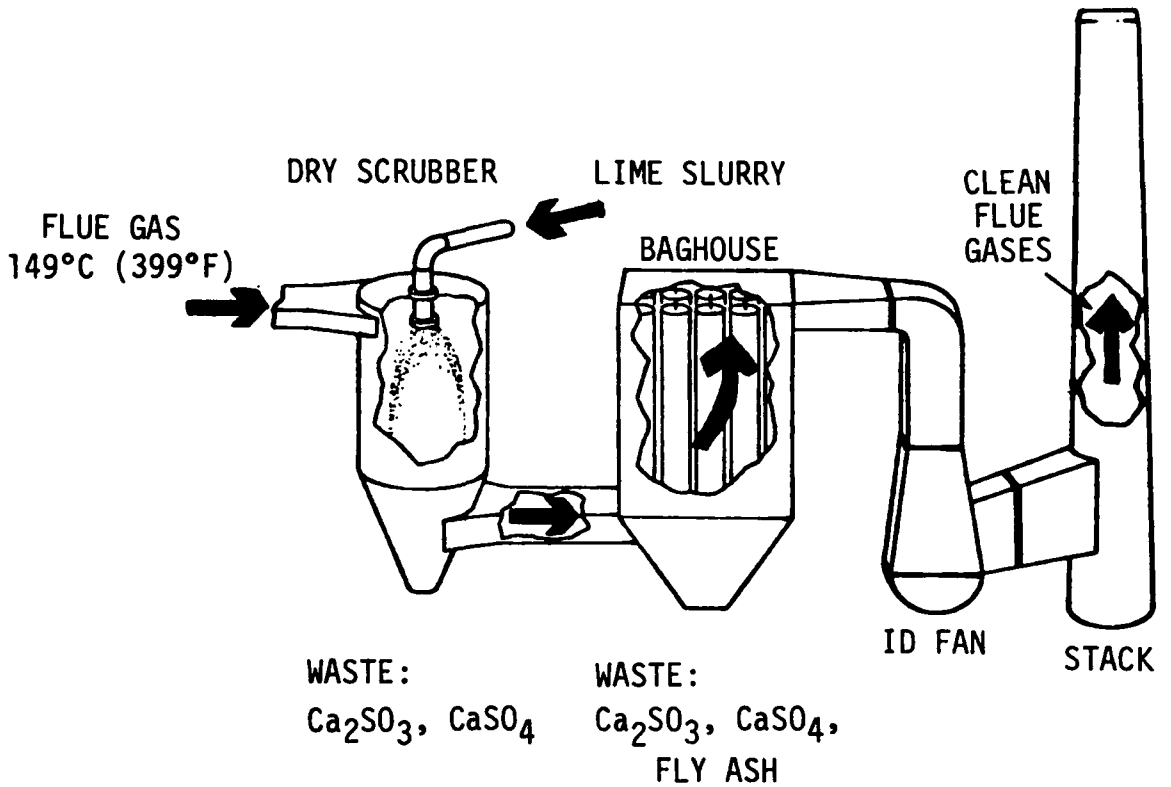

Figure 2-46. Carborundum/DeLaval dry phase collection system.

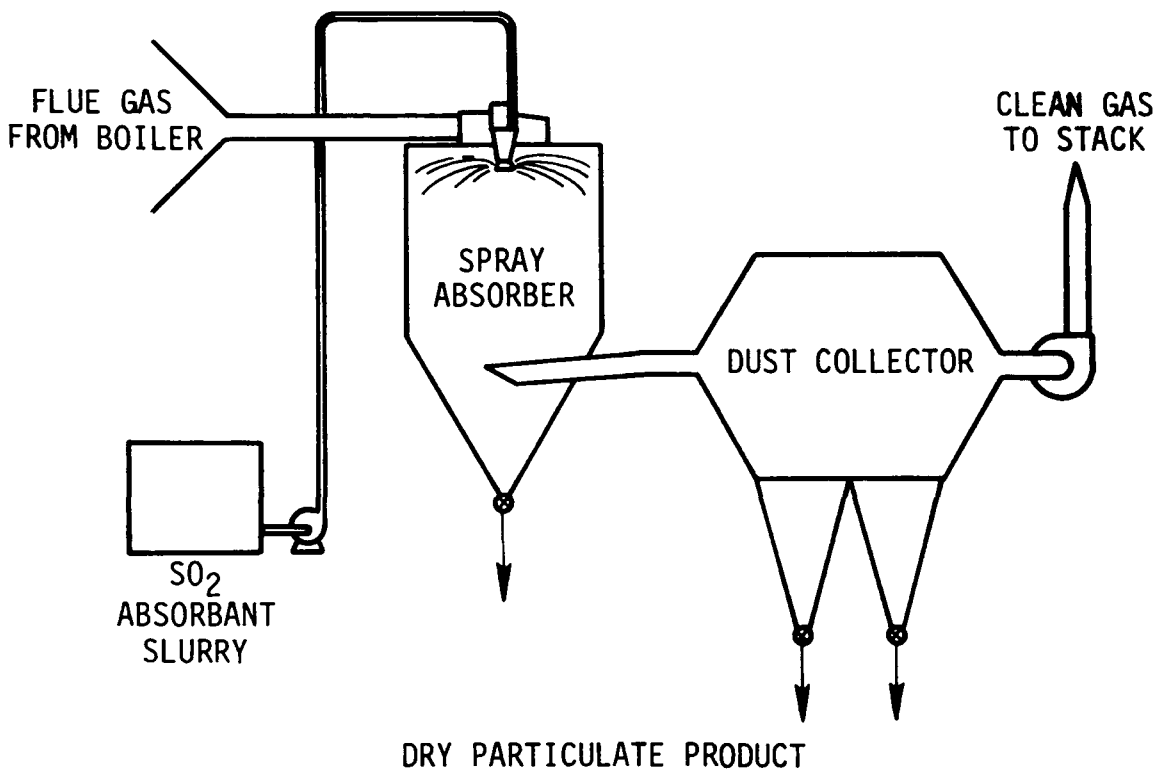

Figure 2-47. Joy Manufacturing/Niro Atomizer dry phase collection process.

the feed from the preparation site to the atomization assembly, a rotary or spinning wheel atomizer for absorbent atomization in the process chamber, a gas distribution system for obtaining the correct gas-liquid mixing within the chamber, and dust collection equipment. These items remove sulfur dioxide and particulates and produces a dry residue that is disposed of along with flyash wastes without further treatment. As in normal dryer operation, temperatures within the absorption system are closely controlled. The outlet temperature is held enough above the dew point to allow for a temperature drop across the dust collection equipment without causing operational problems. As a result of the Leland Olds project, Joy Manufacturing has received a contract from Basin Electric Power Cooperative for a dry scrubbing system to be installed at the Antelope Valley Station near Beulah, North Dakota. Startup of unit 1 is scheduled for mid-1981 and will be nominally rated at 455 MW.

A fourth pilot testing program at another Basin Electric Station was conducted by Babcock and Wilcox. As a result of this testing, Basin Electric has awarded Babcock and Wilcox a contract for a dry phase sulfur dioxide and particulate removal system to be installed at the 550-MW (net) Laramie River Station Unit 3. Startup of this unit is scheduled for January 1982.

REFERENCES FOR SECTION 2.4

1. PEDCo in-house files.

2. Laseke, B.A., Jr. EPA Utility FGD Survey: December 1977 - January 1978. EPA-600/7-78-051a. PEDCo Environmental, Cincinnati, Ohio. March 1978. pp. 84-87.

3. Melia, M., et al. EPA Utility FGD Survey: August-September 1978. Preliminary Report. Prepared for the U.S. Envionmental Protection Agency under Contract 68-02-2603. PEDCo Environmental, Cincinnati, Ohio. November 1978. pp. 12, 49, 50.

4. Laseke, B.A., Jr. Utility FGD Costs: Reported and Adjusted Costs for Operating FGD Systems. Prepared for the U.S. Environmental Protection Agency under Contract 68-02-2603. PEDCo Environmental, Cincinnati, Ohio. September 1978. Form 13.

5. Berube, D.T., and C.D. Grimm. Status and Performance of the Montana Power Company's Flue Gas Desulfurization System. In: Proceedings of the Symposium on Flue Gas Desulfurization-Hollywood, Fl., November 1977 (Volume I). EPA-600/7-78-058a. March 1978. pp. 277-291.

6. PEDCo in-house files.

7. Op. cit. No. 2. pp. 81-83.

8. Op. cit. No. 3. pp. 12, 48.

9. Op. cit. No. 4.

10. PEDCo in-house files.

11. Op. cit. No. 3. pp. 88-98.

12. Op. cit. No. 3. pp. 12, 13, 51-56.

13. Op. cit. No. 4.

14. LaMantia, C.R., et al. Application of Scrubbing Systems to Low Sulfur/Alkaline Ash Coals. EPRI FP-595. Electric Power Research Institute, Palo Alto, California. December 1977. pp. V-9 through V-12, B-31 through B-42.

15. Vaughn, C.F. Flue Gas Scrubbing with Sodium Carbonate (Wet Scrubbers and Their Controls and SO_2 Operating Experiences). Presented at PCEA Engineering and Operating Conference, Los Angeles, California. March 17-18, 1977.

16. Rosenberg, H.S., et al. Status of Stack Gas Control Technology. EPRI 209. Electric Power Research Institute, Palo Alto, California. August 1975. Section 9.

17. Melia, M., et al. EPA Utility FGD Survey August-September 1978. Preliminary Report. Prepared for the U.S. Environmental Protection Agency under Contract 68-02-2603. PEDCo Environmental, Cincinnati, Ohio. November 1978. p. 9.

18. Idemura, H., T. Kanai, and H. Yanagioka. Jet Bubbling Flue Gas Desulfurization Process. In: Proceedings of the Second Pacific Chemical Engineering Congress (PAChEC '77). American Institute of Chemical Engineers, New York, New York. 1977. pp. 365-370.

19. Edwards, R.A., and R.E. Rush. Operational Experience with Three 20-MW Prototype Flue Gas Desulfurization Processes at Gulf Power Company's Scholz Electric Generating Station.

20. PEDCo in-house files.

21. Idemura, H., and D.D. Clasen. Limestone/Gypsum Jet Bubbling Scrubbing System. In: Proceedings of the Symposium on Flue Gas Desulfurization-Hollywood, Fl., November 1977 (Volume 1). EPA-600/7-78-058a. March 1978. pp. 838-840.

22. Op. cit. No. 18. pp. 365-366.

23. PEDCo in-house files.

24. Op. cit. No. 18. p. 367.

25. Ibid. p. 369.

26. Op. cit. No. 17. p. 34.

27. PEDCo in-house files.

28. Estcourt, V.F., et al. Tests of a Two-Stage Combined Dry Scrubber/SO_2 Absorber Using Sodium or Calcium. Presented at the 40th Annual Meeting of the American Power Conference, Illinois Institute of Technology, Chicago, Illinois. April 26, 1978. pp. 4-7.

29. McIlvaine Co. Full-scale Baghouse to be Used For SO_2 Removal. The Fabric Filter Newsletter, 1(13):2-3, November 10, 1976.

30. Op. cit. No. 28. pp. 7-8.

31. Ibid. pp. 8-10.

32. Melia, M., et al. EPA Utility FGD Survey August-September 1978. Preliminary Report. Prepared for the U.S. Environmental Portection Agency under Contract 68-02-2603. PEDCo Environmental, Cincinnati, Ohio. November 1978. p. 15.

33. McIlvaine Co. WP/Niro Guaranteeing 90% SO_2 Removal with Lime. The Fabric Filter Newsletter, 31:5, May 10, 1978.

34. McIlvaine Co. Interest Increasing in Dry SO_2 Removal. The Fabric Filter Newsletter, 32:1-2, June 10, 1978.

35. McIlvaine Co. Filter to be Used in Dry Process. The Fabric Filter Newsletter, 26:3-4, December 10, 1977.

36. McIlvaine Co. Bright Future For Spray Dryers. The Fabric Filter Newsletter, 36:2, October 10, 1978.

37. PEDCo in-house files.

SECTION 3

CONTINUOUS SO_2 MONITORS

Continuous SO_2 monitoring instruments are standard equipment in domestic utility FGD installations. As many as 46 installations may have SO_2 monitoring instruments, and 38 have been positively identified as having them. Not all of the identified units are being routinely monitored (e.g., Apache 2, Duck Creek 1, Conesville 5 and 6, Elrama 1 through 4, Phillips 1 through 6, Petersburg 3).

Most of these units have sampling points both before and after the FGD system (Conesville 5 and 6; La Cygne 1; Green River 1, 2, and 3; Cane Run 4 and 5; Mill Creek 3; Paddys Run 6; Sherburne 1 and 2; Eddystone 1A; Widows Creek 8; Shawnee 10A and 10B; and Huntington 1). A few installations sample the stack only (Apache 2, Winyah 2, R.D. Morrow 1, Martin Lake 1), and some installations sample all three locations (Tombigbee 2, Petersburg 3, Milton R. Young 2, San Juan 1 and 2). Table 3-1 presents a summary of the units known to have continuous monitoring instruments and their sampling points. The SO_2 concentrations monitored are not recorded at these units, however.

The performance of these instruments has often been affected by such problems poor protection of probes, lack of maintenance, lack of spare parts, and inefficient operation of mist eliminators which allow plugging of outlet montior lines. These problems have occurred at Apache 2, Duck Creek 1, Conesville 5 and 6, Elrama 1 through 4, Phillips 1 through 6, Petersburg 3, San Juan 1 and 2, Winyah 2, and Southwest 1. Nevertheless, it appears that satisfactory instrument operation can be attained if a preventive maintenance program is developed and implemented. Such a program could involve: (1) routine instrumentation system in-

TABLE 3-1. IDENTIFICATION OF FGD UNITS WITH CONTINUOUS SO_2 MONITORS

Company	Plant and unit	Monitor type	Model	Manufacturer	Sampling points and comments
Alabama Electric	Tombigbee 2	Photometric	Unknown	Leeds & Northrup	Scrubber inlet and scrubber outlet; stack
Arizona Electric Power	Apache 2	Photometric	Unknown	Environmental Products	Stack
Arizona Public Service	Cholla 1	Photometric	460	Dupont	FGD inlet and outlet
Arizona Public Service	Cholla 2	Photometric	460	Dupont	
Central Illinois Light	Duck Creek 1	Photometric	460	Dupont	No longer in service; utility searching for replacement
Columbus and Southern Ohio	Conesville 5	Photometric	460	Dupont	Inlets and outlets of scrubber modules
Columbus and Southern Ohio	Conesville 6	Photometric		Leak Siegler	Inlets and outlets of scrubber modules
Duquesne Light	Elrama 1 through 6	Photometric	Unknown	Environmental Instruments	No longer in service; utility seraching for replacement
Duquesne Light	Phillips 1 through 6	Photometric	Unknown	Environmental Instruments	No longer in service; utility searching for replacement
Gulf Power	Sholz 1 and 2	Photometric	Unknown	Thermo Electron Corp.	
Indianapolis Power and Light	Petersburg 3	Photometric	Unknown	Environmental Data Corp.	Inlets and outlets of scrubber modules; stack
Kansas City Power and Light	Hawthorn 3				
Kansas City Power and Light	Hawthorn 4				
Kansas City Power and Light	La Cygne 1	Photometric	460 1819	Dupont Environmental Products	Inlets of scrubber module; Scrubber module outlet never functioned properly
Kansas Power and Light	Jeffrey 1				
Kansas Power and Light	Lawrence 4	Photometric	460	Dupont	
Kansas Power and Light	Lawrence 5	Photometric	460	Dupont	
Kentucky Utilities	Green Rivers 1, 2, and 3	Photometric	460	Dupont	Inlet and outlet of scruber module
Louisville Gas and Electric	Cane Run 4	Photometric	460	Dupont	Inlets and outlets of scrubber modules
Lousiville Gas and Electric	Cane Run 5	Photometric	460	Dupont	Inlets and outlets of scrubber modules
Louisville Gas and Electric	Mill Creek 3	Photometric	460	Dupont	Inlets and outlets of scrubber modules; stack
⋮	⋮	⋮	⋮	⋮	

TABLE 3-1. CONTINUED

Company	Plant and unit	Monitor type	Model	Manufacturer	Sampling points and comments
Louisville Gas and Electric	Paddy's Run 6	Photometric	460	Dupont	Scrubber inlet and outlet
Minnkota Power Co-op	Milton R. Young 2	Photometric	Digata 1400 Series (stack)	Environmental Data Corp.	Scrubber inlet and outlets; stack
Montana Power	Colstrip 1				
Montana Power	Colstrip 2				
Nevada Power	Reid Gardner 1	Photometric	460	Dupont	
Nevada Power	Reid Gardner 2	Photometric	460	Dupont	
Nevada Power	Reid Gardner 3	Photometric	460	Dupont	
Northern Indiana Public Service	Dean H. Mitchell 11				
Northern States Power	Sherburne 1	Photometric	460	Dupont	Each module inlet; each bank outlet (before and after reheater)
Northern States Power	Sherburne 2	Photometric	460	Dupont	Each module inlet; each bank outlet (before and after reheater)
Pennsylvania Power	Bruce Mansfield 1	Photometric	460	Dupont	
Pennsylvania Power	Bruce Mansfield 2	Photometric	460	Dupont	
Philadelphia Electric	Eddystone 1A	Photometric	460	Dupont	Scrubber inlet and outlet
Public Service Company of New Mexico	San Juan 1	Photometric	Unknown	Dupont	Scrubber inlet and outlet; stack
Public Service Company of New Mexico	San Juan 2	Photometric	Unknown	Dupont	Scrubber inlet and outlet; stack
South Carolina Public Service	Winyah 2	Photometric	Unknown	Environmental Products	Stack
Southern Mississippi Electric	R.D. Morrow 1	Photometric	SM800	Lear Siegler	Stack
Springfield City Utilities	Southwest 1	Photometric	1-2822	Environmental Products	Scrubber inlet; stack
Tennessee Valley Authority	Widows Creek 8	Photometric	400	Dupont	Scrubber inlets and outlets
Tennessee Valley Authority	Shawnee 10A and 10B	Photometric	400	Dupont	Scrubber lints and outlets

(continued)

TABLE 3-1. CONTINUED

Company	Plant and unit	Monitor type	Model	Manufacturer	Sampling points and comments
Texas Utilities	Martin Lake 1	Photometric Photometric	460 463	Dupont Dupont	Inlets of scrubber modules Stack
Texas Utilities	Martin Lake 2	Photometric Photometric	460 463	Dupont Dupont	Inlets of scrubber modules Stack
Texas Utilities	Monticello 3				
Utah Power and Light	Huntington 1	Photometric	460	Dupont	Inlet and outlet of scrubber modules; bypass

spection (the frequency of which is site dependent); (2) frequent instrument calibration; (3) maintaining an adequate stock of vendor recommended spare parts; (4) training maintenance personnel to make field repairs of instruments; and (5) adaptation of a standard system to a unique problem at the site. Similar types of programs are in effect at Green River 1, 2, and 3; Cane Run 4 and 5; Mill Creek 3; Paddys Run 6; Sherburne 1 and 2; and Huntington 1. Table 3-2 summarizes the operating performance of instruments at various installations.

Only a few installations listed in Table 3-1 are known to record data from their continuous SO_2 monitors. The small number is due either to poor instrument performance or to recent start-up. Apparently, none of the monitoring sytems have been certified. Most don't monitor O_2 and moisture entering and leaving the scrubber. Some don't monitor inlet and outlet SO_2 concentrations. Table 3-3 identifies utilities that have recorded continuous monitoring data.

TABLE 3-2. SUMMARY OF THE PERFORMANCE OF CONTINUOUS SO_2 MONITORS

Company	Plant and unit	Startup date	
Alabama Electric	Tombigbee 2	9/78	No particular problems have been encountered
Arizona Electric Power	Apache 2	8/78	The instrument has never worked properly because of electronic problems; the unit was returned to the factory for repairs
Arizona Public Service	Cholla 1	10/73	
	Cholla 2	6/78	
Central Illinois Light	Duck Creek 1	7/78	The original units have been abandoned because of poor performance; the instruments were part of the original control system, but because of poor performance, they were disconnected and neglected; the utility is now searching for replacements
Columbus and Southern Ohio	Conesville 5	1/77	The monitors were never maintained and have fallen into disrepair
	Conesville 6	6/78	The instruments were never started
Duquesne Light	Elrama 1 through 4	10/75	The original units have been abandoned; the utilty is now searching for replacements
	Phillips 1 through 6	7/73	The original units have been abandoned; the utility is now searching for replacements
Gulf Power	Sholz 1 and 2	8/78	
Indianapolis Power and Light	Petersburg 3	10/77	The stack monitor has not worked properly; parts are now on order.
Kansas City Power and Light	Hawthorn 3	11/72	
	Hawthorn 4	8/72	
	LaCynge 1	2/73	
Kansas Power and Light	Jeffrey 1	8/78	
	Lawrence 4	12/68	
	Lawrence 5	11/71	
Kentucky Utilities	Green River 1, 2, and 3	9/75	No particular problems have been encountered with the instruments when regular maintenance is provided
Louisville Gas and Electric	Cane Run 4	8/76	The units present no major problems when they are regularly maintained; future placement of sampling points in the stack will depend on regulatory agency requirements

(continued)

Company	Plant and unit	Startup date	
	Cane Run 5	12/77	The units present no major problems when they are regularly maintained; future placement of sampling points in the stacks will depend on regulatory agency requirements
	Mill Creek 3	8/78	The units present no major problems when they are regularly maintained; the utility is now planning to place sampling points in the stack to meet regulatory agency requirements
	Paddy's Run	4/73	The units present no major problems when they are regularly maintained
Minnkota Power Corp.	Milton R. Young 2	9/77	Initial electronic operational problems were encountered, however, the problems were corrected when the instruments were modified by adding automatic gain controls; the instruments are now operating satisfactorily
Montana Power	Colstrip 1	11/75	
	Colstrip 2	8/76	
Nevada Power	Reid Gardner 1	4/74	
	Reid Gardner 2	4/74	
	Reid Gardner 3	7/76	
Northern Indiana Public Service	Dean H. Mitchell 1	11/76	
Northern States Power	Sherburne 1	3/76	Problems are kept to a minimum by using a technical staff that regularly maintains the instruments; therefore, operation is kept at a maximum
	Sherburne 2	4/77	Problems are kept to a minimum by using a technical staff that regularly maintains the instruments; therefore, operation is kept at a maximum
Pennsylvania Power	Bruce Mansfield 1	4/76	
	Bruce Mansfield 2	7/77	
Philadelphia Electric	Eddystone 1A	9/75	
Public Service Co. of New Mexico	San Juan 1	4/78	The original instruments were Lear Siegler units, which never performed satisfactory; they have since been temporarily replaced with Dupont units, while the utility decides what instruments to use permanently

(continued)

Company	Plant and unit	Startup date	
Public Service Co. of New Mexico	San Juan 2	7/78	The original instruments were Leer Siegler units that never performed satisfactorly; they have since been replaced with the Dupont units temporarily, while the utility decides what instruments to use on a permanent basis
South Carolina Public Service	Winyah 2	7/77	The instruments have operated poorly; pluggage problems are the most common problem; preventive maintenace has not been a high priority
Springfield Mississippi Electric	R.D. Morrow 1	8/78	The instrument is now at the factor for updating modifications; no problems were encountered during the short period of operation
Springfield City Utilities	Southwest 1	4/77	The instrument has never operated satisfactorily due to electronic problems; initial pluggage problems have been rectified by regular cleaning; Environmental Products Corp. is now trying to rectify the low dependability of the instrument
Tennessee Valley Authority	Widows Creek 8	5/77	The instruments have given dependable service when properly maintained
	Shawnee 10A, 10B	4/77	The instruments have given dependable service when properly maintained
Texas Utilties	Martin Lake 1 Martin Lake 2 Monticello 3	8/77 5/78 5/78	The stack instruments have given dependable service. The majority of analyzer downtime has been due to malfunctions of the strip chart data recorder. Probe failures have been caused by metal fatigue due to turbulance and corrosive atmosphere downstream of the FGD system
Utah Power and Light	Huntington 1	5/78	An initial plugging problem was encountered, but is now kept to a minimum with regular inspection and cleaning

TABLE 3-3. COMPANIES KNOWN TO RECORD CONTINUOUS SO_2 MONITORING DATA

Company	Unit
Kentucky Utilities	Green River 1, 2, and 3
Louisville Gas and Electric	Cane Run 4
Louisville Gas and Electric	Cane Run 5
Louisville Gas and Electric	Mill Creek 3
Minnkota Power	Milton R. Young 2
Northern States Power	Sherburne 1 and 2
Public Service of New Mexico	San Juan 1 and 2
Tennessee Valley Authority	Shawnee 10A and 10B
Utah Power and Light	Huntington 1

SECTION 4

PERFORMANCE AND DEPENDABILITY OF FGD SYSTEMS

This section summarizes the current status of FGD technology and highlights recent technological developments regarding sulfur dioxide removal efficiency and system dependability. The material contained in this section supplements the material contained in Section 4 of the previous report "Flue Gas Desulfurization System Capabilities for Coal-Fired Steam Generators", March 1978 (EPA-600/7-78-032b). All of the documentation in this section is presented by reference to specific pilot, prototype, demonstration, and full-scale facilities. Information for these facilities is presented in detail in Section 2 and Appendices A, B, and C of this report. Much of this information was obtained directly from the owning/operating utility companies, system suppliers, and system designers. Additional information was obtained from technical reports published by the system operators, suppliers, designers, and other research firms to supplement the information obtained through direct contacts.

Analysis of this information indicates that the design and operating experience gained with first and second generation FGD systems (both experimental and full-scale) has resulted in improved design and operation of subsequent installations. Because FGD systems that are being engineered and/or erected will incorporate many or all of these design innovations, even better sulfur dioxide removal and dependability can be expected without substantial cost increase.

4.1 CURRENT TECHNOLOGICAL TRENDS

As indicated in Section 1 of this report, virtually all of the FGD operating experience gained to date has been with the wet-phase, nonregenerable, lime/limestone processes. As a

direct result of this previous experience, the systems committed for operation within the next 3 to 5 years also show an overwhelming preference for lime/limestone processes.

Although there have been and still are problems associated with lime/limestone FGD systems, most of these problems have been identified and solved. In addition, there is a better understanding of methods for reducing the severity of those problems not yet completely solved. The inherent deficiencies of using relatively unreactive materials such as limestone or lime in the treating of gas streams that can vary widely in composition and quantity over short periods of time preclude the solution of some operating difficulties encountered through system design innovations alone, and a combination of good design, operator attention, maintenance, and experience is required.

4.1.1 Process Chemistry

In lime and limestone FGD systems, severe chemical problems have been manifested in the form of scaling and corrosion. In many instances, the presence of one of these problems stimulates the presence or severity of the other. The phenomenon of scaling is closely linked to sulfur dioxide removal and reagent usage.

4.1.1.1 Scaling--

Scaling refers to the uncontrolled chemical deposition of calcium-bearing solids on the internal components of such FGD equipment as scrubbers, mist eliminators, reheaters, nozzles, pipes, and pumps. Three types of scale occur in lime/limestone systems: sulfite, carbonate, and sulfate. The appearance of either sulfite or carbonate scaling does not usually require shutdown for cleanout. This scaling can be removed immediately by lowering the liquor pH, which drives the calcium sulfite and calcium carbonate back into solution.[1]

Sulfate scale, however, is generally considered to be a more serious problem because of the cement-like nature of calcium sulfate (calcium sulfate dihydrate or gypsum). Once formed, this scale generally must be removed by mechanical cleaning, which requires shutdown. Sulfate scaling usually results from oxida-

tion in the system (e.g., in the scrubber, reaction tanks, and thickeners). Laboratory experiments, pilot testing, prototype testing, and experience with full-scale systems have shown that heterogeneous crystallization (the condition necessary for sulfate scaling) is not critical until the relative saturation level reaches approximatley 1.4 to 1.5.[2,3] There have been several important findings regarding sulfate scaling, and many measures to avoid its occurrence have been or are being incorporated in full-scale systems in service, under construction, or planned. These measures are summarized as follows:

Two basic modes of operation have been identified for lime/limestone FGD systems that enable scale-free operation: coprecipitation and desupersaturation.

Coprecipitation involves the removal of calcium sulfate from the system as part of a calcium sulfite/sulfate solid solution.[4] If a system operates so that the maximum oxidation in the slurry circuit is 15 to 16 percent, the scrubbing liquor remains subsaturated with respect to calcium sulfate, and no hard scale occurs.[5] If the degree of oxidation exceeds the 15 to 16 percent level, more calcium sulfate is formed in the slurry circuit than can leave the system in a coprecipitated form. This causes the system to operate supersaturated and to reach relative saturation levels approaching the critical 1.4 to 1.5 values, resulting in heterogenous crystallization and the formation of hard scale within the system.[6]

Desupersaturation involves the removal of calcium sulfate from the system through the use of calcium sulfate (gypsum) seed crystals, which provide nucleation sites for the nonscale-forming homogeneous precipitation of calcium sulfate.[7] The seed crystals are used to control sulfate scaling in a system operating in a supersaturated mode. Crystal growth occurs on the seed crystals, the sulfate is removed from the system as gypsum, and supersaturation levels are kept below the critical 1.4 to 1.5 levels.[8]

Experimentation and operation have shown that lime slurry systems usually operate subsaturated with respect to sulfate

through coprecipitation because of its high degree of reactivity (compared to limestone). In most cases, lime dissolution occurs within 20 to 30 seconds after introduction into the hold tanks. Thus, less retention time is required for the flue gas in the scrubber and the liquor in the hold tank to complete the reaction with sulfur dioxide. This minimizes the amount of sulfite oxidation that can occur in the system and keeps the level below the 15 to 16 percent coprecipitation requirement. Limestone systems, however, generally operate supersaturated with respect to calcium sulfate because limestone is less reactive than lime. Thus, more retention time is required in the scrubber and hold tank to complete the reaction with sulfur dioxide. This increases the amount of sulfite oxidation that can occur in the system, requiring the circulation of gypsum seed crystals to promote homogeneous crystallization for desupersaturation.[9]

Use of magnesium additives--A number of additives have been tested and used to improve the chemistry of lime/limestone slurry systems with respect to scaling, sulfur dioxide removal, and reagent utilization. Foremost among these approaches is the use of magnesium additives to beneficiate the scrubbing slurry. Generally, increasing the magnesium ion concentration increases the liquid-phase alkalinity of the scrubbing slurry, increases the amount of sulfite and sulfate the scrubbing system can hold without exceeding solubility requirements, suppresses calcium concentration in the scrubbing slurry, and suppresses the rate of oxygen pickup relative to sulfur dioxide pickup from the flue gas stream.[10] The overall effect is a subsaturate operation with higher removal efficiencies and high utilizations. Operating experience with magnesium addition at the Shawnee test facility and EPA-sponsored characterization tests at Louisville Gas and Electric, as well as full-scale operating experience at Phillips and Elrama stations of Duquesne Light, the Bruce Mansfield station of Pennsylvania Power, and the Conesville station of Columbus and Southern Ohio Electric are briefly summarized below:

- Shawnee[11] - Increasing the effective magnesium ion concentration in the scrubbing liquor (from 0 to 9000 ppm) strongly increased sulfur dioxide removal. At an effective magnesium ion concentration of 2000 ppm, lime slurry sulfur dioxide removal efficiencies increased by 15 to 20 percent (in the venturi/spray tower). At effective magnesium ion concentrations of 0, 5000, and 9000 ppm, average sulfur dioxide removals were 77, 84, and 94 percent, respectively (for the TCA tower). Increasing the magnesium ion concentrations did not always result in subsaturated operation with respect to calcium sulfate in both lime and limestone systems. For both lime/magnesium ion scrubbing and limestone/magnesium ion scrubbing, gypsum scaling occurred when the gypsum saturation of the scrubbing liquor was as low as 80 percent, compared to about 120 percent with no effective magnesium ion. The increase in concentration of sulfite and sulfate introduced by adding magnesium despresses calcium ion concentration and can cause unexpected gypsum scaling in the absorber. Although the calcium ion concentration is depressed and will be at a low value in the slurry at the scrubber inlet, dissolution of calcium sulfite or calcium carbonate in the scrubber can cause a great increase in gypsum saturation across the scrubber.

- Paddy's Run[12] - The use of commercial lime with an addition of 55 percent slurry of magnesium hydroxide yielded an effective magnesium ion concentration of 4000 ppm. During the course of the test, the magnesium oxide concentration was gradually lowered to 2000 ppm. Sulfur dioxide removals of 99.7 to 99.9 percent were achieved with inlet sulfur dioxide loadings of 2150 to 2230 ppm and outlet loadings of 1 to 5 ppm. These removal efficiencies were accompanied by calcium sulfate relative saturations approaching zero. Maintaining the effective magnesium ion concentration in the 2400 to 3000 ppm range provided the best control for maintaining high sulfur dioxide removals and low calcium sulfate relative saturation levels.

- Phillips[13] - Experimental work at the Duquesne Light Phillips Power Station involving magnesium modified lime supplied by Dravo (Thiosorbic lime: 2 to 6 percent magnesium oxide) was conducted late in 1974 and from October to December 1975. Approximately 160 MW of flue gas was supplied to two single-stage venturi scrubbers. One scrubber was maintained at constant load, wheareas the other was maintained at station cyclic load. Magnesium oxide concentrations of 6, 8, and 10 percent in the lime corresponded to an effective

magnesium ion concentration of 1900 to 4000 ppm in the scrubbing slurry. Results of the tests indicated that sulfur dioxide removal as high as 88 percent was achieved with 10 percent magnesium oxide (3000 to 4000 ppm magnesium ion) and 77 percent sulfur dioxide removal with 6 percent magnesium oxide. Previous operaton using pebble quickline indicated the system was achieving sulfur dioxide removal efficiencies in the 50 to 60 percent range. The scaling that had previously plagued the system when using high calcium commercial lime did not occur. Low sulfate relative saturation levels were achieved, and no hard or soft scale accumulation was observed.

As a result of the successful test program at Phillips, Duquesne Light modified their existing FGD systems at Elrama and Phillips to use 7 to 8 percent magnesium oxide lime to remove 83 percent of the sulfur dioxide from 2.1 percent sulfur coal. Full-scale operation using the magnesium-modified lime began at both stations in late March 1978. Compliance tests conducted by Alleghany County in late August 1978 indicated that Phillips was well within the allowable sulfur dioxide emission regulations of 258 ng/J (0.6 lb/10^6 Btu).

- Bruce Mansfield[14] - Operation of the full-scale systems at Bruce Mansfield indicate that emission regulations are being met or bettered using Thiosorbic lime, which yields an effective magnesium ion concentration of 2000 ppm in the scrubbing liquor. Following optimization of the pH-reagent feed control system, subsaturated operation with respect to calcium sulfate was achieved and no accumulation of scale deposits in the scrubbers has been observed.

- Conesville[15] - The Conesville FGD systems use Thiosorbic lime as the scrubbing reagent, which yields an effective magnesium ion concentration of 2000 ppm in the scrubbing liquor to achieve high sulfur dioxide removals (89.5 percent design for 5.0 percent sulfur coal) and subsaturated operation with respect to calcium sulfate.

Pullman Kellogg offers a proprietary reagent known as catalytic limestone which contains 3 to 27 percent soluble magnesium sulfate. Although only bench scale and pilot plant operating experience has been obtained, results indicated that high sulfur dioxide removals (90 to 100 percent) were achieved at low relative calcium sulfate saturation levels.[16]

sively researched by TVA and TVA/EPA.[17,18] This research has concentrated on the use of benzoic acid and, more recently, adipic acid at the Shawnee test facility. These acids are generally stronger than carbonic acid but weaker than sulfurous acid. This has two effects: first, it assists in limestone dissolution by lowering carbonate ion back pressure, which means that more alkalinity in the form of bicarbonate enters the scrubber in soluble form; and second, because sulfurous acid is a stronger acid, the benzoate or adipate ion acts as a base in the sulfur dioxide absorption step.[19] Thus, the addition of organic acid acids increases the total liquid phase alkalinity of the scrubbing liquor in much the same fashion as an increase in alkalinity due to magnesium ion.[20] Intensive testing with adipic acid was recently begun at the TVA/EPA Shawnee alkali scrubbing test facility. In July 1978 initial test runs were performed without adipic acid to establish base lines for both lime and limestone scrubbing. Adipic acid testing has continued throughout the balance of the year. Some of the major preliminary findings are summarized below:[21]

1. Lime slurry scrubbing in the two-stage prototype consistently achieved 96 to 99 percent sulfur dioxide removal with 1400 ppm of adipic acid in the venturi and 1600 ppm in the spray tower loops. The base case lime run in this system showed 66 percent sulfur dioxide removal.

2. Lime slurry scrubbing in the TCA prototype achieved approximately 80 percent sulfur dioxide removal with 400 ppm of adipic acid, compared with a 67 percent sulfur dioxide removal for the base case lime run.

3. Limestone slurry scrubbing in the two-stage prototype consistently achieved sulfur dioxide removals higher than 90 percent with 2100 ppm of adipic acid in the venturi and 1500 ppm in the spray tower loops, compared with a 57 percent sulfur dioxide removal for the base case limestone run.

4. Limestone slurry scrubbing in the TCA prototype consistently achieved sulfur dioxide removals higher than 90 percent with 750 and 1500 ppm of adipic acid, compared with a 71 percent sulfur dioxide removal for the base case limestone run.

5. The preliminary results of the Shawnee test program indicate higher removal efficiencies, higher utilizations, and lower scaling potential, which substantially agrees with initial expectations. Specifically, it has been most effective when used in conjunction with forced oxidation and upstream particulate precollection (fly ash removal by an ESP). One negative aspect, however has been the unexpectedly high deterioration or decomposition of adipic acid that takes place in the scrubber. Actual feed rates of adipic acid were two to three times higher than could be accounted for in the system discharge sludge.

Design changes--A number of process design innovations have been developed to eliminate scaling and increase sulfur dioxide removal efficiency and reagent utilization. Forced oxidation is one technique that has been successfully piloted and used in commercial installations. Forced oxidation has been pilot-plant tested at EPA-IERL/RTP and Shawnee. A number of demonstration and full-scale installations have also used forced oxidation, including Sherburne 1 and 2 (Northern States Power), Lawrence 4 and 5 (Kansas Power and Light), Widows Creek 8 (Tennessee Valley Authority), Cholla 1 (Arizonia Public Services),* and Will County 1 (Commonwealth Edison).* The use of forced oxidation has been considered a major factor in achieving high sulfur dioxide removals while enabling the systems to run calcium sulfate scale-free.

Forcibly oxidizing all the sulfite to sulfate and desupersaturating by circulating seed crystals has been especially successful in controlling scale in limestone systems treating flue gas with low-sulfur dioxide loadings (Sherburne 1 and 2, and Lawrence 4 and 5). This occurs because the lower the inlet sulfur dioxide concentration, the higher the oxidation fraction.[22,23,24] Thus, a lesser degree of forced oxidation is required to drive all the sulfite to sulfate in order to insure efficient desupersaturation and sulfate scale-free operation. Systems treating gas from low-sulfur western coal can operate at natural oxidation levels in excess of 90 percent.[25] Pilot studies

* Short-term experimental basis.

show that 600 ppm loadings yielded 70 percent oxidation, whereas 2500 ppm loadings resulted in 12 percent oxidation.[26]

Operating changes--Several operating parameters have an important impact on scaling.

1. Control of pH. Excluding all other factors, the difference in optimum operating pH affects the performance of lime/limestone slurry systems by introducing two problems: operation at low pH promotes the formation of hard calcium sulfate scale, and operation at high pH promotes the formation of soft calcium sulfite scale. Hard scale forms as a function of slurry pH because the solubility of calcium sulfite increases dramatically as pH decreases, and the calcium sulfate concentration decreases slightly as pH decreases. Thus, calcium sulfate is more likely to precipitate out as a hard scale at lower pH. To avoid hard scale formation, the slurry pH should be maintained at high levels. The solubility of calcium sulfite decreases rapidly as pH increases, however, promoting the formation of soft calcium sulfite scale.[27] Therefore, optimum pH levels for lime and limestone are generally maintained in the 8.0 to 8.5 and 5.5 to 6.0 ranges, respectively. La Cygne and Bruce Mansfield are examples of full-scale systems where equipment limitations (pH sensor type and measurement location) prevented accurate pH measurements. Hence, frequent losses of chemical control were encountered, resulting in periodic massive scaling. Resolution of these pH-related equipment limitations resulted in immediate improvement in reagent utilization and sulfur dioxide removal and virtual elimination of any scaling.[28,29]

2. Solids Level. If all other variables are held constant, increases in slurry solids levels increase the amount of seed crystal area available for homogeneous crystallization.[30] This is especially true for systems

that control sulfate levels by desupersaturation. For these systems, an optimum amount of slurry seed crystals is maintained in the system by maintaining an optimum level of slurry solids. Thus, when the solids level drops, the seed crystal level drops correspondingly, resulting in the impairment or loss of homogeneous crystallization, the onset of heterogeneous crystallization, and subsequent scale development. Examples of full-scale systems that utilize this method of control are Sherburne 1 and 2 and Lawrence 4 and 5. These systems desupersaturate by converting all the sulfite to sulfate (with the aid of forced oxidation); and precipitating the calcium sulfate with the aid of gypsum seed crystals. These systems have also encountered minor episodes of sulfate scaling, which in every case was due to dilution of the slurry solids level after the mist eliminator wash water rate was increased to improve cleanliness. The increased levels of makeup water in the system decreased the slurry solids level and the seed crystal level, impairing desupersaturation and resulting in scale formation in the systems. Reestablishment of slurry solids levels prevented further episodes of scaling.[31]

3. Liquid-to-gas Ratio. If all other variables are held constant, increasing the L/G reduces the sulfur dioxide pickup per volume of scrubbing liquor. Thus, the relative saturation increase in the scrubber liquor can be reduced. Higher L/G's also reduce the requirement for alkaline solids dissolution because more liquid-phase alkalinity will be available. Therefore, the requirement for calcium dissolution and its resulting effect upon calcium sulfate relative saturation level can be reduced by using high L/G's.[32]

4.1.1.2 Summary of Scaling Problems--

In summary problems connected with scaling, sulfur dioxide removal, and reagent utilization with respect to lime/limestone slurry FGD systems are essentially limited to the deposition of calcium sulfate solids (gypsum) in the slurry circuit as a result of oxidation in the scrubber vessels, reaction tanks, and thickener. This scaling, which affects system availability, can be described in terms of relative saturation levels. Critical relative saturation levels are about 1.4 to 1.5. At this level, heterogeneous crystallization and uncontrolled depostion of gypsum on equipment internals can occur. Several important considerations and findings have been investigated in recent years, and corrective measures have been developed that have minimized or virtually eliminated gypsum scaling as a major operational problem. Foremost among these recent developments are two basic modes of chemical operation that can maintain a scale-free environment: coprecipitation and desupersaturation. Coprecipitation effectively removes calcium sulfate from the system as part of a calcium sulfite/sulfate solid solution. This can be achieved when the maximum oxidation in the slurry circuit is approximately 15 to 16 percent. Desupersaturation effectively removes calcium sulfate from the system through the use of calcium sulfate seed crystals, which provide nucleation for the non-scale-forming homogenous precipitation of calcium sulfate. The identification of these two basic chemical modes of operation and the tendency of lime and limestone slurry systems to operate in either one or the other has given rise to a number of techniques that improve their capability to operate scale-free while achieving higher sulfur dioxide removals and higher reagent utilizations. Such techniques involve the use of additives such as magnesium and organic acids, which improve reagent reactivity, reagent utilization, and sulfur dioxide removal, and enhance the potential for scale-free operation. The use of additives in commercial applications has been confined to beneficiation with magnesium. Experimental work at Shawnee with magnesium and

adipic acid has also showed correspondingly improved operation for both lime and limestone slurry systems. The use of forced oxidation for limestone slurry systems that scrub flue gas resulting from the burning of low-sulfur western coal flue gas has been very successful in maintaining high sulfur dioxide removals and scale-free operation. In addition to the chemical and process design scale-control methods, a number of operating parameters such as pH, slurry solids, and L/G have been determined to have a pronounced impact on scaling, utilization, and sulfur dioxide removal. Factorial analyses have demonstrated that optimum operating parameters for lime and limestone slurry systems can prevent or correct the incidence of scaling while maintaining high utilizations and sulfur dioxide removals. To summarize, sufficient information is now available so that good engineering design can now insure when the use of lime or limestone is more appropriate and what chemical and physical measures and operating parameters are necessary to achieve high sulfur dioxide removals and scale-free operation for both high and low sulfur coals.

4.1.1.3 Corrosion--

In simple terms, corrosion is the dissolving or wearing away of the metal surfaces of FGD equipment. Although corrosion is a chemical phenomenon, this phenomenon cannot be analyzed in a strictly chemical fashion as was scaling. Analysis of corrosion involves consideration of design, construction, and fabrication (see Process Design, Section 4.1.2). Nevertheless, the phenomenon of corrosion with respect to lime/limestone slurry FGD systems and design and operating measures taken to minimize or eliminate corrosion problems are discussed briefly in the balance of this section.

Two basic corrosive agents are present that have very serious consequences from the standpoint of FGD system performance: (1) acids containing sulfur in the form of sulfurous and sulfuric acids and (2) soluble mineral matter in the form of chloride. These two basic types of corrosive agents give rise to a number

of specific types of corrosion: general corrosion, pitting, crevice corrosion, intergranular corrosion, stress-corrosion cracking, and erosion-corrosion.

A number of design, construction, fabrication, and operation measures have been developed that successfully minimize the rate of corrosion or prevent its appearance altogether. These measures are summarized briefly below.

A selective process design approach has been developed by the major system suppliers that allows highly corrosive environments to be isolated to discrete areas of the FGD system. Such an approach involves the segregation of the scrubbing loop into separate multiple loops so that a different set of chemical conditions is maintained for quenching or prescrubbing, absorption, and mist eliminator washing (wash trays). In such designs, the quencher or prescrubber bears the first full brunt of the incoming hot flue gas. It encounters the total chloride content from the fuel fired without dilution, and it also is the area in which low-pH, chloride-laden, return water is used freely in lime/limestone slurry systems. Isolation of such a corrosive environment to the quencher or prescrubber is advantageous because this area is small enough and discrete enough that it can be constructed of chloride-resistant materials without drastically increasing costs. Alloys that have been tested and specified for full-scale systems are listed in ascending order of molybelmum content, pitting resistance, and cost: 317L stainless steel, Incoloy Alloy 825, Hastelloy G, Inconel Alloy 625, and Hastelloy C-276.[33] Systems operating at Cholla, Duck Creek, Reid Gardner, Conesville, Petersburg, Southwest, and Martin Lake (to mention a few) have used these materials successfully in small amounts in the quench or prescrubbing area.

In many of the initial lime/limestone slurry systems, the incoming hot gas contacted the reactive absorbant suspension, resulting in the accumulation of solids at the wet/dry interface. These deposits provided convenient sites for the accumulation of chloride at concentrations approaching 50,000 ppm. The result

was severe episodes of pitting, stress corrosions, crevice corrosion, stress-corrosion cracking, and errosion-corrosion.[34] This problem area has been largely overcome by better control of process chemistry, the use of self-cleaning devices, the highly selective use of superior construction materials, and the use of multiple-loop designs. Better control of process chemistry eliminates the formation of corrosion in the system and thus prevents the formation of chloride ion host sites. A number of systems are equipped with soot blowers in the approach ducts to the scrubber modules so that the inevitable buildup of solids at the wet/dry interface can be cleaned automatically and periodically. The Lawrence and Sherburne systems have such self-cleaning devices.[35, 36]

Most suppliers now prefer 316L stainless steel for the scrubber modules. This material has demonstrated superior resistance of corrosion, errosion, and scale development compared with carbon steel, 304 stainless steel, and 304L stainless steel. The preference for 316 and 316L stainless steel is based primarily on the smooth mating surfaces and molybdenum content of these steels. The former attribute minimizes the presence of crevices that provide convenient sites for buildup of soluble mineral materials (e.g., chloride). The molybdenum content (2.50 to 2.75 percent minimum) of stainless steel increases corrosion resistance to sulfurous and sulfuric acids and also increases resistance to localized attack such as pitting and crevice corrosion. One utility specifies 317 low-carbon stainless steel, which has a minimum molybdenum content of 3 to 4 percent (Tennessee Valley Authority, Widows Creek 7).[37] Full-scale systems that have successfully used 316 and 316L stainless steel as the primary material of construction for the scrubber modules are Cholla, La Cygne, Lawrence, Will County, and St. Clair.[38,39,40,41,4

Mist eliminators have been very susceptible to corrosion. Most suppliers now recommend the use of fiberglass-reinforced plastics, polypropylene, and corrugated plastics over stainless steels and other alloys in mist eliminators because these materials are relatively lightweight, inexpensive, and superior in

resistance to corrosion.[43] Reheaters have been especially susceptible to corrosion, and the trend is toward indirect hot-air reheat because in-line reheat systems have been subject to corrosion and plugging in the tubes. The corrosion in some cases has been so severe that even the heartier alloys have been unsatisfactory under many operating conditions.[44]

Particulate precollection using an upstream electrostatic precipitator (ESP) or fabric filter (FF) minimizes a number of chemical-related problems associated with simultaneous or two-stage wet scrubbing systems. Most notably, these include minimizing the potential of corrosion attack and scale formation within the FGD system. In this latter regard, some metallic components in the fly ash have been indentified as catalytic oxidation sites for the promotion of sulfite to sulfate oxidation in the scrubbing slurry, thus resulting in sulfate saturation in the scrubbing slurry and uncontrolled gypsum scale formation. Problems associated with erosion-corrosion are reduced because the slurry is not as abrasive as it would be if it contained collected fly ash. Two-stage scrubbing systems, which collect fly ash as well as sulfur dioxide, often have slurry solids level as high as 18 to 20 percent (e.g., La Cygne). Hence, erosion-corrosion problems and the materials required to minimize these problems are accentuated.[45]

If reliable particulate precollection in the form of ESP's or FF's is provided, the balanced-draft fan or FGD booster fan may be placed upstream of the FGD system since the erosive nature of hot, fly-ash-laden flue gas will have been largely eliminated. Such a design improves overall system dependability. Many of the fans on the initial systems operated on cool, saturated gas, which resulted in acid attack, corrosion, solids deposition erosion, and scale development on the fan blades and housing, and often led to forced outages.[46]

4.1.1.4 Summary of Corrosion Problems--

In summary, problems connected with corrosion in lime/limestone slurry scrubbing systems can be limited to the action of

the basic corrosive agents present in FGD systems: sulfur-containing acids in the form of sulfurous and sulfuric acid and soluble mineral matter in the form of chloride. The specific types of corrosion that have been encountered in scrubbing systems are general corrosion, pitting, crevice corrosion, intergranular corrosion, stress-corrosion cracking, and erosion-corrosion. A number of design, construction, fabrication, and operation measures have been developed to decrease the rate of corrosion or prevent its appearance altogether. System suppliers and designers have developed a selective process design approach that relegates highly corrosive environments to discrete areas of the FGD system. These discrete areas (such as prescrubbers or quenchers) are small enough so that they can be constructed of exotic construction materials without having a severe impact on the overall capital cost of the system. Other design, construction, and operating procedures have also been adopted to minimize corrosion, and sufficient data are now available for a better understanding of corrosion problems in FGD systems. Procedures have been developed to insure that corrosion does not seriously affect removal efficiency or dependability.

4.1.2 Process Design

Several advances in the process design of lime/limestone slurry FGD systems have improved system dependability and sulfur dioxide removal. These advances and methods developed to reduce problems with major FGD equipment are described below.

4.1.2.1 Emission Control Strategy--[47]

In recent years the trend in design of particulate and sulfur dioxide emission control systems is toward combined ESP/FGD or FF/FGD strategies over simultaneous or two-stage wet scrubbing strategies. This preference in emission control strategy design is due to the high reliability afforded by ESP's and FF's, which enables selective bypass of scrubber modules without having to reduce the load or shut the unit down. Other benefits include:

- The potential for corrosion at wet/dry interfaces and erosion-corrosion in the FGD systems is minimized.

- The potential for scale formation and plugging in the FGD system is minimized.
- Exotic construction materials can be used more selectively and in less amounts.
- Balanced-draft and booster fans can precede rather than follow the FGD system.
- Sludge blending and stabilization processes which use dry fly ash as an additive are permitted.

4.1.2.2 Equipment Design Improvements--

Specific design and operating improvements for FGD-related equipment are as follows:

Balanced-draft or booster fans[48]--In addition to placement of these fans upstream of the FGD system, another development is the use of variable-pitch, axial flow fans. The main advantage of this design is its consistently higher efficiency (versus centrifugal fans) over the entire boiler operating range, which results in a substantial power savings. Other advantages are superior flow control, arrangement flexibility, easy access and maintenance, less severe construction requirements, and increased design reliability.

Dampers--Bypass and isolation dampers are used to regulate the flow of flue gas into and around the FGD system. The primary purpose of isolation is to continue unit operation while the scrubber modules are under maintenance. Efficient and reliable dampers allow maintenance crews to service the modules in an efficient and timely manner. Common designs include slide-gate (guillotine), single-blade butterfly, and multiblade parallel (louver) dampers.[49] Corrosion and erosion of various types of dampers and damper seals have been common. In some cases, dampers have failed or been so inefficient that the modules could not be maintained during bypass situations. Because of such problems, TVA considered removing or welding open all the guillotine dampers on their Widows Creek scrubbing system.[50] The current trend is toward two-stage louver dampers having a pressurized seal-air system that maintains a positive pressure between them.

Pressurized seal air increases the parasitic energy demand of the system because of increased fan power requirements, but it contributes significantly to successful damper operation.[51]

Scrubbers--Several recent design innovations increased dependability and removal efficiency of scrubbers. Cooling the gas to its adiabatic saturation temperature prior to contact with the scrubbing slurry increases sulfur dioxide removal capability and minimizes the potential for scaling and corrosion at the slurry/gas interface area. Presaturators or quenchers were not incorporated into the design of many of the initial FGD systems, partly because they had venturi scrubbers and packed-bed scrubbers incorporated in them for first-stage or simultaneous removal of particulate in the FGD system. In such systems, the incoming, hot, pollutant-laden flue gas contacted the suspended reactive absorbant and resulted in solids accumulation and subsequent corrosion. For this reason, presaturators or quenchers that use clear liquor or spent slurry for the absorbing stage (multiple slurry loops) are now used (or plans call for their use) in systems that include dry-phase particulate precollection.[52]

The trend in lime/limestone slurry FGD systems is away from venturi and packed-bed designs to spray towers and combination towers. The venturi design has been abandoned largely because the small liquid/gas contact time resulted in relatively low sulfur dioxide absorption.[53] Scaling, plugging, and corrosion of internals have occurred frequently in packed-bed designs (fixed and mobile) and tray towers. Spray towers, on the other hand, have few internal components in the gas liquid contact zone, and therefore offer the potential for greater dependability because there are fewer sites for deposition of solids in the form of scale, collected fly ash, and unused reagent.[54] A number of past and current operations have or are utilizing spray tower designs, including Four Corners (demonstration, terminated), Mohave (demonstration, terminated), St. Clair (demonstration, terminated), Highgrove (prototype, terminated), Shawnee (prototype, operational), Lawrence (full-scale, operational), M. R. Young

(full-scale, operational), and Sherburne (prototype,* operational). To date spray tower operation has been very successful. High dependability and sulfur dioxide removal has been reported on almost all the above-mentioned systems; however, several limitations have been encountered. Mass transfer limitations and cost tend to restrict spray tower design applications so that only low- and medium-sulfur coal can be used in conventional lime/limestone slurry systems.†

The greater tendency for slurry carryover in spray towers requires either increased tower height or special mist eliminator designs (wash trays, bulk entrainment separators), both of which increase capital and annual cost requirements.[55] These limitations have given rise to the development of combination towers. These towers combine the features of venturi, packed, tray, and spray towers into one module. Examples of combination towers are Research Cottrell's spray/packed tower, Combustion Equipment Associates' venturi/spray tower, and Universal Oil Products' tray/packed tower. These designs offer greater flexibility in that operating conditions can be segregated into discrete areas of the scrubber, allowing separate chemical and physical conditions to be maintained. This permits the use of the double-loop slurry concept in which low-pH liquor contacts the entering flue gas in an initial scrubbing stage, where some sulfur dioxide removal takes place and unused reagent is consumed. High-pH liquor is contacted with the gas in the second scrubbing stage, where the bulk sulfur dioxide removal takes place. Spent slurry from this stage is discharged to the first stage. Fresh makeup

* One of the 12 scrubber modules installed on Sherburne 1 has been converted to a spray tower as a test to determine design and operating parameters for Sherburne 3 and 4, two full-scale units for which spray tower absorbers are planned.

† High-sulfur-coal spray tower applications in service at Cane Run and scheduled for Bruce Mansfield and Thomas Hill use special reagents (carbide lime, magnesium-promoted lime, and limestone) to compensate chemically for mass transfer limitations.

reagent is added only to the second stage. This type of design takes advantage of the concept used for developing the Weir scrubber where the highest gas sulfur dioxide concentration (inlet) contacts the lowest liquor alkalinity and the highest liquor alkalinity contacts the lowest sulfur dioxide concentration (outlet).[56,57] Performance has verified the potentially high removals and utilizations afforded by such designs. Borgwardt has reported 97 percent limestone utilization and 81 percent sulfur dioxide removal in a limestone-scrubbing, forced-oxidation pilot plant, which is of the double-loop, two-stage design.[58] Texas Utilities has reported 99 percent sulfur dioxide removal and high utilization in the spray/packed tower limestone slurry scrubbers at Martin Lake.[59] Montana Power has reported higher than design sulfur dioxide removal and reagent utilization in the alkaline fly-ash, lime-slurry scrubbers at Colstrip, which are of the venturi/spray tower design.[60]

Reaction tanks--Coinciding with gas-side staging is liquid-side staging, in which hold tanks are arranged in series to simulate plug flow reactor designs. (A plug flow design is one that allows the reacting liquor to flow through the reactor without the occurrence of any backmixing. A plug flow situation can be simulated by arranging agitated tanks in series.)[61] This design concept was originally piloted by Borgwardt at IERL-RTP and further tested at Shawnee, where sulfur dioxide removal was increased from 70 to 79 percent by changing the reaction tank design from one agitated tank to three agitated tanks of equal volume in series for limestone slurry scrubbing.[62] Full-scale applications that incorporate liquid-side staging include Lawrence 4 (supplied by Combustion Engineering), Cholla 1, and Martin Lake 1 (both supplied by Research Cottrell).[63,64,65] All these applications are low-sulfur, limestone-slurry systems. Sulfur dioxide removals and dependabilities greater than 90 percent have been reported.

Mist elimination[66,67]--Chevron and baffle-type mist eliminators still continue to be the exclusive designs used in U.S.

utility FGD systems. A number of different designs have been tested, including wire-mesh, tube-tank, gull-wing, ESP, and radial-vane. The performance and economics associated with these and other design alternatives indicate that emphasis on the use of baffle and chevron types will continue. The popularity of these separators is due primarily to design simplicity, adequate collection efficiency for medium to large size drops, relatively low pressure drop, wide-open construction, easy access for maintenance, design flexibility, and relatively low cost. Within these two preferred types of mist eliminators, a number of specific design, construction, and operation improvements have been implemented.

1. Chevron designs of continuous-vane construction predominate over noncontinuous-vane construction because of greater strength and lower cost.

2. Multiple-stage designs predominate over single-stage designs. This tendency is process-sensitive in that limestone systems, which predominate in the United States, generally require two or three stages for effective mist entrainment separation. La Cygne and Lawrence are examples of limestone systems that employ multiple stages, including precollectors.

3. Single-stage designs are successful for lime systems because of the superior reactivity of lime and the correspondingly higher utilization.

4. The number of passes per stage also tends to be process-sensitive in that four-pass designs are generally used for lime and three-pass designs for limestone. More passes are required for lime systems because of the single-stage design, less passes are required for limestone because of the multiple-stage design.

5. Fiberglass-reinforced plastics, polypropylene, and corrugated plastics are now used in almost every operational system and specified for use in almost every planned system. These materials are preferred because they are relatively lightweight, inexpensive, and superior in resistance in corrosion. Potential problems associated with high temperature have been minimized by specifying materials that can withstand exposure to 205°C (400°F).

6. Vane spacings of 3.8 to 7.6 cm (1.5 to 3.0 in.) are generally used in single or first stages and 2.2 to 2.5 cm (0.9 to 1.0 in.) for second stages.[77] Multiple staging permits the use of finer spacings, which provide increased mist-separation capability for smaller particles.

7. The horizontal configuration (vertical gas flow) is still widely used because of adequate performance (to date), operational and design simplicity, and lower capital cost. The vertical configuration offers a number of advantages over the horizontal configuration. For example, reentrainment due to the gas flow opposing the path of the drainage is eliminated, and limitations on wash water quality and quantity (as well as wash direction) are eliminated. Two systems (Widows Creek and Duck Creek) recently started operations using vertical configurations. Initial performance results indicate adequate operation performance and no major operating problems to date.

8. Special features, such as hooks and pockets, are desirable for prevention of reentrainment.

9. Bulk separation devices, impingement plates, single baffle deflectors, and gas direction changes are becoming integral parts of mist eliminators because of increased removal efficiency and design flexibility.

10. Wash and knock-out trays have been incorporated into a number of mist eliminators to conserve fresh water and increase (or extend) the quantity of water available for washing.

11. Wash systems utilizing blended water consisting of pond return water or thickener overflow and fresh water are used over other strategies (total return or total makeup). Intermittent high-pressure, high-velocity wash systems are preferred to continuous wash systems because of impact on water balance and chemistry.

12. Optimum distances between stages are generally 1 to 1.5 m (4 to 5 ft), and freeboard distances are 1 to 1.5 m (4 to 5 ft). The former is the minimum permitting easy access for maintenance. The latter is the distance at which carryover can be minimized without drastically increasing tower height and pressure drop.

13. Superior overall operation is obtained when fly ash is collected prior to the scrubbing system. This is because nonfly-ash scrubbing systems usually have a low slurry solids content, and the lower the slurry solids

content, the less likely the tendency for mist eliminator fouling.

Reheaters--A pronounced preference for stack gas reheat versus no reheat (wet stack) is still evident for those systems in service and committed for future operation.[68] The wet stack systems at Cane Run and Green River have been abandoned in favor of reheat because of corrosion, plume dispersion, and plume visibility problems.[69,70] Stack liner repairs have also been required at Duck Creek.[71] Reheater malfunction at Bruce Mansfield contributed to stack liner failures and acid rainout problems encountered at that station.[72] These problems are more pronounced at high-sulfur coal applications because of the higher sulfur dioxide loadings. Concerning reheater design and construction, a number of developments have been made:[73,74]

1. Among the systems that have operated or are currently in service, in-line reheat has proved to be the most popular strategy.

2. The trend in reheat strategies, as evidenced by FGD systems scheduled for immediate and future operation, is away from in-line and direct combustion methods and toward indirect hot air reheat. The rationale for this trend is largely dependent on the problems encountered in the former and the necessity for oil or natural gas in the latter. In-line reheat systems have been subject to corrosion and plugging in the tubes. The corrosion in many cases has been so severe that even the heartier alloys have been unsatisfactory under many operating conditions. Many of these problems have been attributed to upstream mist eliminator inefficiency and inadequate self-cleaning techniques (soot blowers).

3. A number of the major system suppliers still recommend in-line reheaters, especially when minimization of the parasitic energy demand is in order. It has been determined that corrosion of high-alloy materials is attributed to stress corrosion caused by chloride, whereas carbon steel is more susceptible to acid corrosion caused by high sulfur dioxide concentrations. Therefore, if low sulfur/low chloride, low sulfur/high chloride, or high sulfur/low chloride environments can be accurately identified, in-line reheaters may be used successfully.

4. Indirect hot air reheat has the undesirable effect of increasing the parasitic energy demand of the FGD system as well as the overall capital cost.

5. Bypass reheat is used for low-sulfur coal FGD applications when the required degree of reheat is not seriously constrained by emission standards.

6. The use of efficient mist eliminators reduces the load on the reheat system by removing water droplets from the flue gas stream.

7. ΔT's of 14° to 28°°C (25° to 50°F) adequately prevent downstream water condensation.

Solids separation[75]--The major development in this area involves the increased emphasis placed on the mechanical separation techniques of clarification, centrifugation, and vacuum filtration, and decreased emphasis on interim ponding. Formerly, an interim pond was relied on to fulfill three functions: clarification, dewatering, and temporary or final sludge storage. The realization that a single pond cannot perform all three has spurred the development of the other techniques. Furthermore, increasing emphasis on off-site disposal for landfill and structural fills, plus increased emphasis on attaining closed water-loop operations, has also stimulated the use of clarifiers, centrifuges, and vacuum filters. In addition to these techniques, several installations are experimenting with or using forced-oxidation strategies to enhance solids settling properties, to improve process chemistry, and to decrease sludge disposal and land requirements.

Process control and instrumentation[76]--Because of the complex nature of lime/limestone scrubbing chemistry, which has been the primary source of operating problems in full-scale systems, process control is considered a crucial item. The following is a brief review of some of the essential findings and innovations in the development of process control technology:

- Four process variables have been identified as critical from the standpoint of process control: flue gas flow, slurry pH, slurry solids, and liquid level.

- Virtually all of the operating full-scale systems regulate reagent feed rate by controlling slurry pH. This works by using a pH sensor to provide a control signal for modulating the flow of reagent to the FGD system in a feedback control mode. The pH signal regulates the position of control valves for controlling the rate of reagent feed.

- The major problems encountered with pH control systems, include sensor plugging, calibration drift, breakage, false indication, improper location of sensor, and erosion/corrosion damage.

- Sufficient operating experience has been obtained so that most of the reagent feed control problems have been identified. Once identified, these problems have been resolved through various design modifications and/or new operating and maintenance procedures.

- Concerning selection of hardware, for pH control it has been noted that dip-type sensors are more successful than in-line sensors because they are easier to clean and calibrate. In-line, flow-through sensors are generally subject to more wear and abrasion and generally require more frequent maintenance.

- Other reagent feed control systems have been or are being evaluated on full-scale systems. One type involves feed-forward reagent control on inlet flue gas flow rate and sulfur dioxide concentration with trim provided by slurry pH.

  Another type involves control of reagent feed rate using the outlet sulfur dioxide as the control variable. Limited success has been reported for both of these systems, primarily because of the difficulty in obtaining accurate and consistent readings from sulfur dioxide gas analyzers. This has been especially difficult on high-sulfur coal applications.

4.1.2.3 Summary of Process Design--

Process design innovations on lime/limestone slurry scrubbing systems involve emission control strategy and specific equipment design improvements.

With respect to the approach to emission control, ESP/FGD and FF/FGD strategies predominate over simultaneous or two-stage scrubbing strategies for particulate and sulfur dioxide removal. Dry-phase particulate precollection offers a number of benefits,

including the following: the scrubber module can be bypassed during maintenance or forced-outage situations without having to shut down or reduce the load; potential for corrosion, erosion, and scaling in the system is minimized; exotic construction materials for the FGD system can be used more selectively and in less amounts; fans can precede rather than follow the FGD system; and sludge blending and stabilization processes using dry fly-ash additives are permitted.

With respect to equipment design improvements, several specific design and operating improvements have been made in a number of major FGD-related equipment areas. Briefly, these include the use of variable-pitch axial-flow fans, pressurized seal-air louver dampers, spray and combination scrubber towers, liquid-side staging, multiple staging and vertical mist eliminator arrangements, indirect hot-air reheaters, mechanical solids/liquid separation techniques, automatic pH-reagent feed control systems, 316L stainless steel construction materials for the scrubbers, and CXL-2000 lining for the stack flues. Analysis of the general and specific process design trends indicates that systems are designed to incorporate increased flexibility and reliability. Specifically, the tendency is toward sparing of modules and ancillary components and designing less interdependent systems (i.e., systems in which major unit operations are not strongly affected by upstream or downstream performance). An example of this latter design trend is the removal of the reheater from direct contact with the flue gas stream (in-line), thus making it less sensitive to mist eliminator performance. Also, many of these systems are installed on new, base-loaded units that are designed to fire coal from specific sources. This results in a flue gas with more constant and stable characterisitcs. This aids FGD system dependability because the system does not have to respond to a dramatic variation in flue gas flow rate and composition. In many of the original FGD applications, the systems were required to operate on widely varying loads (cycling and peak), and varying coal types (low-sulfur western,

high-sulfur eastern, and blends), situations that often required them to respond to conditions beyond their process control capability. Consequently, variations in the reagent feed rate, loss of chemical control, and the incidence of chemical and mechanical problems resulted in numerous forced outages.

REFERENCES FOR SECTION 4.1

1. Cheremismoff, P.N., and Fellman, R.T. Optimizing SO_2 Scrubbing Processes. Power Engineering. October 1974. pp. 54-56.

2. Corbett, W.E., Hargrove, O.W., and Merill, R.S. A Summary of the Effects of Important Chemical Variables Upon the Performance of Lime/Limestone Wet Scrubbing System. Prepared by Radian Corporation for EPRI. FP-639, Research Project 630-3. December 1977. p. 3-4.

3. Gogineni, M.R., and Maurin, P.G., Sulfur Oxides Removal by Wet Scrubbing - Application to Utility Boilers. Presented at Frontiers of Power Technology Conference, Stillwater Okalhoma, October 1-2, 1975. p. 4.

4. Op. cit. No. 2. p. 3-9.

5. Op. cit. No. 2 pp. 3-11, 3-12.

6. Op. cit. No. 3. p. 4.

7. Op. cit. No. 2. p. 3-13.

8. Op. cit. No. 3. p. 4.

9. Op. cit. No. 2. pp. 2-9, 2-10, and 3-11.

10. Op. cit. No. 2. pp. 2-14, 2-15, 2-16, and 3-8.

11. Head, H.N. EPA Alkali Scrubbing Test Facility: Advanced Program, Third Progress Report. EPA-600/7-77-105. Bechtel Corporation, San Francisco, California. September 1977. pp. 1-5, 1-7, and 5-25.

12. Van Ness, R.P. Louisville Gas and Electric Company Scrubber Experiences and Plans. Presented at the Flue Gas Desulfurization Symposium sponsored by the U.S. Environmental Protection Agency, Hollywood, Florida, November 8-11, 1977. p. 7.

13. Nelson, R.L., and O'Hara, R.D. Operating Experiences at the Phillips and Elrama Flue Gas Desulfurization Facilities. Presented at the 2nd Pacific American Chemical Engineering Conference, Denver, Colorado, August 1977. p. 309.

14. Laseke, B.A. Survey of Flue Gas Desulfurization Systems: Bruce Mansfield Station, Pennsylvania Power Company. Preliminary Draft. PEDCo Environmental, Cincinnati, Ohio pp. 53-54.

15. Laseke, B.A., et al. EPA Utility FGD Survey: December 1977-January 1978. EPA-600/7-78-051a, March 1978. PEDCo Environmental, Cincinnati, Ohio. pp. 29-32.

16. M.W. Kellogg Engineering Information Series. Improving Mass Transfer Characteristics of Limestone Slurries by Use of Magnesium Sulfate. Reprinted from Environmental Science & Technology, June 1976.

17. Rochelle, G.T. Process Synthesis and Innovation in Flue Gas Desulfurization. EPRI FP-463-SR. July 1977. p. 2-51.

18. Borgwardt, R.H. Significant EPA/IERL-RTP Pilot Plant Results. Presented at the EPA Industry Briefing Conference. August 29, 1978.

19. Op. cit. No. 2. p. 2-16.

20. Ibid.

21. Melia, M. et al. EPA Utility FGD Survey: October-November 1978. Preliminary Draft, January 1979. PEDCo Environmental, Cincinnati, Ohio. pp. 78-79.

22. Laseke, B.A. Survey of Flue Gas Desulfurization Systems: Sherburne County Generating Station, Northern States Power Company. Preliminary Draft. PEDCo Environmental, Cincinnati, Ohio. pp. 42-43.

23. Laseke, B.A. Survey of Flue Gas Desulfurization Systems: Lawrence Energy Center, Kansas Power and Light Company. Preliminary Draft. PEDCo Environmental, Cincinnati, Ohio. pp. 49-50, 53.

24. Op. cit. No. 2. p. 3-6.

25. Ibid.

26. Ibid.

27. Op. cit. No. 1.

28. Op. cit. No. 14.

29. McDaniel, C.F. La Cygne Station Unit No. 1 Wet Scrubber Operating Experience. Presented at the Utility Scrubber Conference, Denver, Colorado. March 29-30, 1978.

30. Op. cit. No. 2. pp. 3-4, 3-5, and 3-6.

31. Op. cit. No. 23. pp. 53-54.

32. Op. cit. No. 2. p. 3-13.

33. The Key Technical Issues of SO_2 Scrubbing. Vol. 2-June 1976. Prepared by Research-Cottrell, Bound Brook, New Jersey.

34. Laseke, B.A., and Devitt, T.W. Status of Flue Gas Desulfurization Systems in the United States. Presented at the 71st Annual AIChE Meeting, Miami Beach, Fla., November 12-16, 1978. pp. 32-33.

35. Op. cit. No. 22. pp. 26, 31, 32, and 52-55.

36. Op. cit. No. 23. p. 42.

37. Op. cit. No. 34. p. 42.

38. Laseke, B.A. Survey of Flue Gas Desulfurization Systems: Cholla Steam Electric Station, Arizona Public Service. EPA-600/7-78-048a. March 1978. Prepared by PEDCo Environmental, Cincinnati, Ohio pp. 11-13.

39. Laseke, B.A. Survey of Flue Gas Desulfurization Systems: LaCygne Power Station, Kansas City Power and Light. EPA-600/7-78-048b. March 1978. Prepared by PEDCo Environmental, Cincinnati, Ohio. pp. 20, 33, 34, 37.

40. Op. cit. No. 23. pp. 36, 37.

41. Laseke, B.A. Survey of Flue Gas Desulfurization Systems: Will County Power Station, Commonwealth Edison. EPA-600/7-78-048d. March 1978. Prepared by PEDCo Environmental, Inc., Cincinnati, Ohio. pp. 12, 31.

42. Laseke, B.A. Survey of Flue Gas Desulfurization Systems: St. Clair Station, Detroit Edison Co. EPA-600/7-78-048c. March 1978. Prepared by PEDCo Environmental, Inc., Cincinnati, Ohio. pp. 13, 15.

43. Op. cit. No. 34. p. 34.

44. Op. cit. No. 34. p. 36.

45. Op. cit. No. 34. p. 30.

46. Op. cit. No. 34. p. 31.

47. Laseke, B.A. Affidavit for Case No. C2-78-786. United States of America vs. Ohio Edison Company and Duquesne Light Company.

48. Op. cit. No. 34. p. 31.

49. Lime Slurry Data Book. Preliminary Draft. Prepared for EPA and EPRI by PEDco Environmental, Inc., Cincinnati, Ohio. Section 5.4.11, p. 39.

50. Wells, W.L., et. al. TVA's Experience with Limestone Scrubbers at the 550-MW Widows Creek Unit 8. Presented at the American Power Conference, Chicago, Illinois. April 25-26, 1978.

51. Op. cit. No. 49 p. 39.

52. Op. cit. No. 34. pp. 32,33.

53. Op. cit. No. 49. p. 23.

54. Op. cit. No. 34. p. 33.

55. The Key Technical Issues of SO_2 Scrubbing. Vol. 4-January 1977. Prepared by Research-Cottrell, Bound Brook, New Jersey.

56. Op. cit No. 2. pp. 2-14, 2-14.

57. The Key Technical Issues of SO_2 Scrubbing. Vol. 2-June 1976. Prepared by Research-Cottrell, Bound Brook, New Jersey.

58. Op. cit. No. 2. p. 2-13.

59. Ballard, B., and M. Richman. FGD Systems Operation at Martin Lake Steam Electric Station. Presented at the Joint Power Generation Conference, Dallas, Texas. September 10-13, 1978.

60. Berube, D.T., and C.D. Grimm. Status and Performance of the Montana Power Company's Flue Gas Desulfurization System. In: Proceedings of the Symposium on Flue Gas Desulfurization, Hollywood, Fla., November 1977 (Volume I). EPA-600-7-058a. March 1978. pp. 277-291.

61. Op. cit. No. 2. p. 2-13.

62. Ibid.

63. Op. cit. No. 23. p. 47.

64. Op. cit. No. 38. pp. 8,9,10.

65. Op. cit. No. 59.

66. Op. cit. No. 34. pp. 33,34,35.

67. Op. cit. No. 49. Section 4.7.10., pp. 59-60.

68. Op. cit. No. 34. p. 35.

69. Laseke, B.A. Survey of Flue Gas Desulfurzation Systems: Green River Station, Kentucky Utilities. EPA-600/7-78-048e. March 1978. Prepared by PEDCo Environmental, Inc., Cincinnati, Ohio. pp. 23,24.

70. Op. cit. No. 12. pp. 2,3,4.

71. Laseke, B.A. Survey of Flue Gas Desulfurization Systems: Duck Creek Station, Central Illinois Light Company. Preliminary Draft. Prepared by PEDCo Environmental, Inc., Cincinnati, Ohio p. 48.

72. Op. cit. No. 14. pp. 50,51,52,53,

73. Op. cit. No. 34. pp. 35,36,37.

74. Op. cit. No. 49. Section 4.11.11, pp. 41,42.

75. Op. cit. No. 34. pp. 38,39.

76. Op. cit. No. 34. pp. 40,41.

4.2 RECENT TRENDS IN THE DEPENDABILITY OF THE TECHNOLOGY

The figures used in the earlier report and those used here were developed from one or a combination of two or more of the four performance factors used to characterize the operation of an FGD system in the EPA Utility FGD Survey reports, but availability, operability, reliability, and utilization are now combined and addressed (as a group) as dependability. These figures are developed from the most appropriate parameter or parameters reported by a given utility when more than one is reported or from whatever parameters are available when only one utility is reporting.

As was mentioned in the earlier report, the design and operation of newer FGD systems benefit from the experience gained on older units. As expected and as shown in Figure 4-1, dependability improves as newer FGD units are put into operation. Figure 4-1 also shows the cumulative FGD dependability percentage as a function of FGD startup dates. Table 4-1 identifies the units plotted in this figure.

Improved dependability can be seen in two ways. Because the low performance of systems has been improving over the years, the slope, although positive, is decreasing. The y-intercept clearly has increased from roughly 40 percent in the March 1977 report to 53 percent in the updated September 1978 graph. Also the cumulative dependability of the newer systems has in general been greater than the linear regression line (i.e., the points lie above the line), with only a few very poor performers pulling the high end of the regression line downward. The slope should decrease as the average dependability approaches 100 percent with newer FGD installations and as the dependability of early units

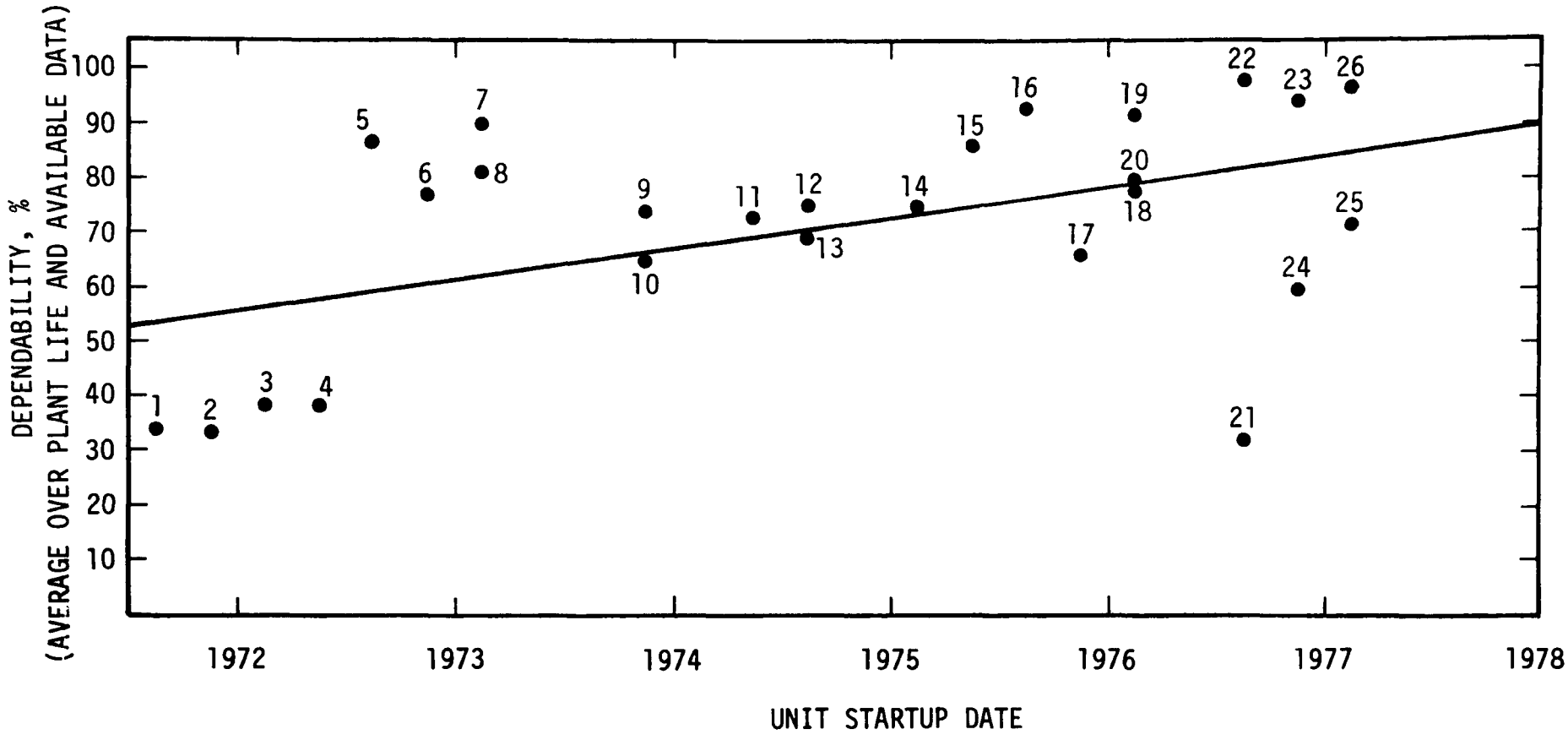

Figure 4-1. Average plant FGD dependability versus startup date.

TABLE 4-1. IDENTIFICATION OF PLANTS IN FIGURE 4-1

1.	Will County No. 1 Commonwealth Edison	14.	Green River Unit Nos. 1, 2, 3 Kentucky Utilities
2.	Mystic No. 6 Boston Edison	15.	Colstrip No. 1 Montana Power
3.	Hawthorn No. 4 Kansas City Power and Light	16.	Sherburne County Station No. 1 Northern States Power
4.	Hawthorn No. 3 Kansas City Power and Light	17.	Bruce Mansfield No. 1 Pennsylvania Power
5.	La Cygne No. 1 Kansas City Power and Light	18.	Cane Run No. 4 Louisville Gas and Electric
6.	Paddys Run No. 6 Louisville Gas and Electric	19.	Colstrip No. 2 Montana Power
7.	Cholla No. 1 Arizona Public Service	20.	Reid Gardner No. 3 Nevada Power
8.	Mohave 2A Southern California Edison	21.	Conesville No. 5 Columbus & Southern Ohio Electric
9.	Reid Gardner No. 2 Nevada Power	22.	Lawrence 4[a] Kansas Power and Light
10.	Mohave 1A Southern California Edison	23.	Sherburne County Station No. 2 Northern States Power
11.	Reid Gardner No. 1 Nevada Power	24.	Widows Creek No. 8 Tennessee Valley Authority
12.	Scholz No. 1A Gulf Power	25.	Bruce Mansfield No. 2 Pennsylvania Power
13.	Scholz 1B and 2B Gulf Power	26.	Martin Lake 1[b] Texas Utilities

[a] Estimate based on PEDCo Environmental in-house files. The newly modified system began operating in 1977.

[b] Estimate based on Reference 1 and PEDCo Environmental in-house files.

improves. The dependability coordinate of the median point on the graph is increasing as expected with improved FGD technology.

4.2.1 Availability of Selected Systems

Figure 4-2 is an updated version of the average availability graph shown in the March 1978 report. This figure also shows the range in average monthly systems (except where otherwise indicated) for a number of selected FGD systems that historically have shown high average performance. The figure also shows the annual average (except where otherwise indicated) for the systems.

4.3 TRENDS IN MANUFACTURERS' GUARANTEES[1]

Many of the initial systems purchased by the utilities were accompanied by nebulous process guarantees. In most instances these guarantees proved to be less than binding because of lack of specificity in covering the possible range of operating conditions. Currently, however, the major system suppliers are willing to supply detailed guarantees in several important areas, including sulfur dioxide removal, particulate removal, acid mist in outlet, waste stream quality/quantity, power consumption, water consumption, reagent consumption, reheat energy consumption, and system availability. Some general developments in each of these guarantee areas are briefly summarized in the following:

4.3.1 Sulfur Dioxide Removal

Previously, guarantees were written to specify only sulfur dioxide removal for a specific coal sulfur content. The removal level was such that, for the specified coal, sufficient sulfur dioxide would be removed from the flue gas to meet the applicable regulation. Problems were encountered with this strategy because coal sulfur content and flue gas flow rate deviations can affect the required sulfur dioxide removal and operation of the system. Bidders are now being required to guarantee meeting the applicable regulation over the entire range of operating conditions set forth in the design basis.

4.3.2 Particulate Removal

For most systems coming on stream, particulate collection

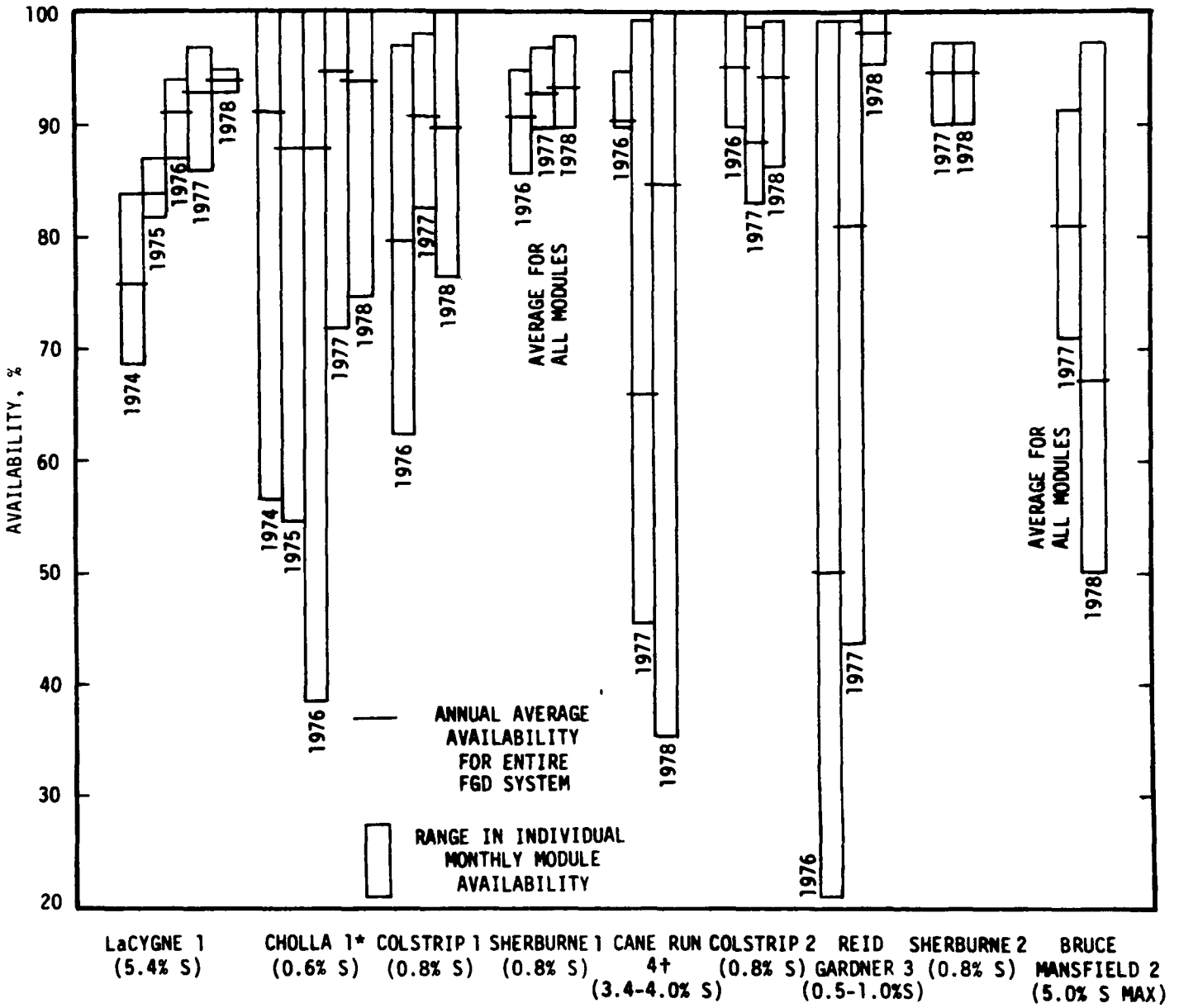

Figure 4-2. Average availability for selected FGD systems.‡

* Reliability
† Operability
‡ With the exception of Sherburne 1 and 2, these systems do not include a spare module (Coostrip 1 and 2 do have spare gas treating capacity, however).

occurs in an ESP or fabric filter upstream of the FGD system. Particulate emission is still an area of concern, however, because of slurry carryover and acid mist. Suppliers are now asked to request a guarantee that the particulate loading at the FGD outlet be no greater than that at the inlet (ESP or fabric filter outlet). If particulate removal is provided in the scrubbing system (e.g. simultaneous or two-stage), guarantees like that for sulfur dioxide removal (Section 4.3.1) are applicable.

4.3.3 Acid Mist

Although this is a nebulous area because of difficulty in qualification and quantification, mist loading at the scrubber discharge is being requested because of its impact on particulate emissions and the operation of downstream equipment (reheater loading, corrosion, etc.).

4.3.4 Power Consumption

Power consumption guarantees now specify a maximum percentage of the total plant power to be used by the FGD system.

4.3.5 Reheat Energy, Reagent, and Water Consumption

Normally, the system suppliers are requested to provide a guaranteed maximum consumption rate for each of these parameters.

4.3.6 System Availability

Guarantees concerning system availability are now frequently required of suppliers. Availabilities of 90 percent or greater are now offered by most major suppliers.

4.4 SUMMARY OF SULFUR DIOXIDE REMOVAL EFFICIENCY

A complete list of U.S. utility FGD systems that have achieved 90 percent or greater sulfur dioxide removals is provided in Table 4-2. This table identifies all pilot, prototype, demonstration, and full-scale FGD systems according to utility, station, unit, nature of application, and removal value(s). It also provides information qualifying the nature of the removal values listed.

TABLE 4-2. U.S. UTILITY FGD SYSTEMS ACHIEVING OR EXCEEDING 90% SULFUR DIOXIDE REMOVAL

Utility	Station	Unit	Application	% SO_2 Removal
Arizona Public Service	Cholla	1	Full-scale[a]	92[b]
Arizona Public Service	Four Corners	5	Demonstration	95
Boston Edison	Mystic	6	Demonstration	90
Central Illinois Light	Duck Creek	1	Demonstration[c]	92[d]
Columbus & So. Ohio Elec.	Conesville	5	Full-scale	90[e]
Commonwealth Edison	Will County	1	Full-scale	92[f]
Detroit Edison	St. Clair	6	Demonstration	91[g]
Duquesne Light	Phillips	1-6	Full-scale	90+[h]
Gulf Power	Scholz	1A	Prototype	95
Gulf Power	Scholz	2A	Prototype	95
Gulf Power	Scholz	1B&2B	Prototype	95
Gulf Power	Scholz	1&2	Prototype	93
Kansas Power & Light	Lawrence	4	Full-scale	96-98[i]
Kentucky Utilities	Green River	1,2&3	Demonstration	90+[j]
Louisville Gas & Electric	Cane Run	4	Full-scale	90[k]
Louisville Gas & Electric	Paddy's Run	6	Demonstration	99[l]
Nevada Power	Reid Gardner	1	Full-scale	90+[m]
Nevada Power	Reid Gardner	2	Full-scale	90+[m]
Nevada Power	Reid Gardner	3	Full-scale	90+[m]
Northern Indiana Public Serv.	D.H. Mitchell	11	Full-scale	91
Pennsylvania Power	Bruce Mansfield	1	Full-scale	95[n]
Pennsylvania Power	Bruce Mansfield	2	Full-scale	95[n]
Philadelphia Electric	Eddystone	1	Demonstration	95
Potomac Electric & Power	Dickerson	3	Demonstration	90
Public Service of New Mexico	San Juan	1	Full-scale	90+[o]
Southern California Edison	High Grove	1	Prototype	90+
Southern California Edison	Mohave	1	Demonstration	95
Southern California Edison	Mohave	2	Demonstration	95
Springfield City Utilities	Southwest	1	Full-scale	92[p]
Tennessee Valley Authority	Shawnee	10A	Prototype	95-99
Tennessee Valley Authority	Shawnee	10B	Prototype	95-99
Tennessee Valley Authority	Widows Creek	8	Full-scale	94[q]
Texas Utilities	Martin Lake	1	Full-scale	99[r]

(continued)

TABLE 4-2 (continued)

[a] Module A only. Total systems removal is 58.5 percent.
[b] Performance test value.
[c] One of four modules operating during an 8-month test.
[d] Performance test value.
[e] Performance test value estimate. Actual value not available.
[f] Module A performance value during one series of tests.
[g] Thirty-day performance test value.
[h] Two-stage scrubbing train test performance value.
[i] Performance test value.
[j] Initial performance data based on American Air Filter strip chart data.
[k] Initial performance data.
[l] Performance data during limited test period.
[m] Performance test values.
[n] Performance value based on Pennsylvania Power strip chart data.
[o] Performance test value.
[p] Performance test value. Design removal is 80 percent.
[q] Performance test value. Design removal is 75 percent.
[r] Scrubber removal values. Total system removal is 70 percent.

An analysis of the systems identified in Table 4-2 indicates that approximately half of them are experimental pilot, prototype, and demonstration units. Of the full-scale units listed, only five (Conesville, Mitchell, Bruce Mansfield 1 and 2, and San Juan) are required to remove 90 percent of the sulfur dioxide or better at maximum coal sulfur content. The remaining full-scale systems are included because of short-term test results (Lawrence, Green River, Cane Run, Reid Gardner, Southwest, and Widows Creek) or because of modular performance* (Cholla, Will County, Phillips, and Martin Lake). Nineteen are medium- to high-sulfur coal applications, 12 are low-sulfur coal applications, and 2 are medium- to high-sulfur oil applications.

---

* Both short-term and long-term performance periods.

SECTION 4.3

REFERENCES

1. Lime Slurry Data Book. Preliminary Draft. Prepared for EPA and EPRI by PEDCo Environmental, Inc., Cincinnati, Ohio. Section 5.3, pp. 7,8,9,10,11,12,13,14,15.

APPENDIX A

DOMESTIC LIME SLURRY FGD

SCRUBBING SYSTEMS

This appendix summarizes data on the lime slurry FGD scrubbing systems presented in Section 2.1 and describes the other systems in this country that use lime or lime with alkaline fly ash.

The following FGD systems are described:

- Arizona Public Service - Four Corners 5
- Columbus and Southern Ohio Electric Company - Conesville 5 and 6
- Duquesne Light Company - Elrama Power Station
- Duquesne Light Company - Phillips Power Station
- Kansas City Power and Light - Hawthorn 3 and 4
- Kentucky Utilities - Green River 1, 2, and 3
- Louisville Gas and Electric - Cane Run 4
- Louisville Gas and Electric - Cane Run 5
- Louisville Gas and Electric - Mill Creek 3
- Louisville Gas and Electric - Paddy's Run 6
- Minnkota Power Cooperative - Milton R. Young 2
- Montana Power - Colstrip 1 and 2
- Pennsylvania Power - Bruce Mansfield 1 and 2
- Tennessee Valley Authority - Shawnee 10A and 10B
- Utah Power and Light - Huntington 1

ARIZONA PUBLIC SERVICE

FOUR CORNERS 5

POLLUTION CONTROL[1,2]

The FGD system retrofitted on Four Corners 5 in February 1976 was a Weir horizontal crossflow spray scrubber operated in a test program at the Mohave Generating Station of the Southern California Edison Company. The system was used in a prototype scrubbing program through December 1976 and has been previously described. No formal FGD operations have taken place at Four Corners since completion of the 10-month test.

FUTURE PLANS[3,4]

To meet current state regulations, New Mexico Air Pollution Control officials have determined that 67.5 percent of the sulfur dioxide (SO_2) must be removed from the emissions at Four Corners. At present, Four Corners 1, 2, and 3 each operate two Chemico venturi scrubber modules for particulate control. Because of the high alkalinity of the fly ash, these scrubbers remove roughly 30 percent of the SO_2 from the flue gas.

Tests were carried out on scrubber 2A (Four Corners 2) between February 28 and March 10, 1976, to determine whether the venturi scrubbers at Units 1, 2, and 3 could be upgraded to achieve the necessary additional SO_2 control. The program was designed to characterize the influence of several operating parameters, especially slurry pH, on SO_2 removal efficiency. Normal scrubber design was modified to allow the addition of a lime slurry directly into the scrubber bottom, and the desired pH was attained by varying the lime slurry flowrate. Figure A-1

shows the effect of pH on SO_2 removal efficiency; and Table A-1 summarizes the important parameters and results.

These results, together with additional data from testing in mid-1977, prompted Arizona Public Service to plan compliance with SO_2 removal regulations by increasing the alkalinity of the scrubbing solution in the three venturi scrubbers with more lime. Full-scale operation is expected to begin in 1979.

At Four Corners 4 and 5, plans call for FGD systems to be installed and start operation in 1982. United Engineers has been selected to supply the systems, although a scrubbing process has not yet been chosen. The utility is currently evaluating information from the prototype scrubbing program to help ascertain the emission control strategy.

Table A-1. SUMMARY OF FOUR CORNERS 2A SCRUBBER MODULE ISOLATION TESTING SERVICE IN FEBRUARY AND MARCH 1976[4]

Test number	Ratio of liquid to gas, liters/m^3	(gal/10^3 ft^3)	Liquid rate, liters/s	(gal/min)	Venturi pressure drop, in. H_2O	Slurry solids, %	Slurry recycle pH	Inlet SO_2, ppm	SO_2 removal, %	Slurry recycle relative saturation $CaCO_3$	$CaSO_3 \cdot 1/2H_2O$	$CaSO_4 \cdot 2H_2O$	Partial pressure of SO_2 over slurry recycle, Pa (atm)	Total number of scrubbers operating	Rate of scale deposit cm/m^2 per yr	(in/ft^2 per yr)	Lime utilization, %
1	2.9	(22)	315	(5000)	18.3	2.5	3.6	600	25	1.44×10^{-6}	7.56×10^{-3}	1.78	2.5 (2.5×10^{-5})	6	136	(4.96)	
2	2.7	(20)	293	(4650)	20.4	5.4	4.0	520	24	1.32×10^{-5}	0.068	1.63	2.9 (2.9×10^{-5})	4	105	(3.84)	
3	2.8	(21)	300	(4750)	19.3	10.6	4.0	625	31	1.02×10^{-5}	.067	1.66	3.5 (3.5×10^{-5})	4	22	(0.80)	127
4	2.8	(21)	312	(4950)	19.4	3.5	6.0	575	47	0.108	8.64	1.93	2.4×10^{-2} (2.4×10^{-7})	2	0	(0.00)	65
5	3.1	(23)	322	(5100)	20.2	5.6	7.0	785	63	2.71	6.39	1.05	2.6×10^{-4} (2.6×10^{-9})	2	0	(0.00)	a
6	2.7	(20)	328	(5200)	9.3	3.2	4.5	600	23	9.94×10^{-5}	0.247	1.12	9.1×10^{-1} (9.0×10^{-6})	2	0	(0.00)	
7	2.7	(20)	341	(5400)	15.7			635	22					2	0	(0.00)	
8	3.9	(29)	410	(6500)	19.5	2.0	8.6	580	82	29.2	6.23	0.51	1.8×10^{-7} (1.8×10^{-12})	2	22	(0.81)[b]	63

[a] Realistic lime utilization could not be computed due to slaker operational problems.

[b] Scale appeared to be calcium carbonate.

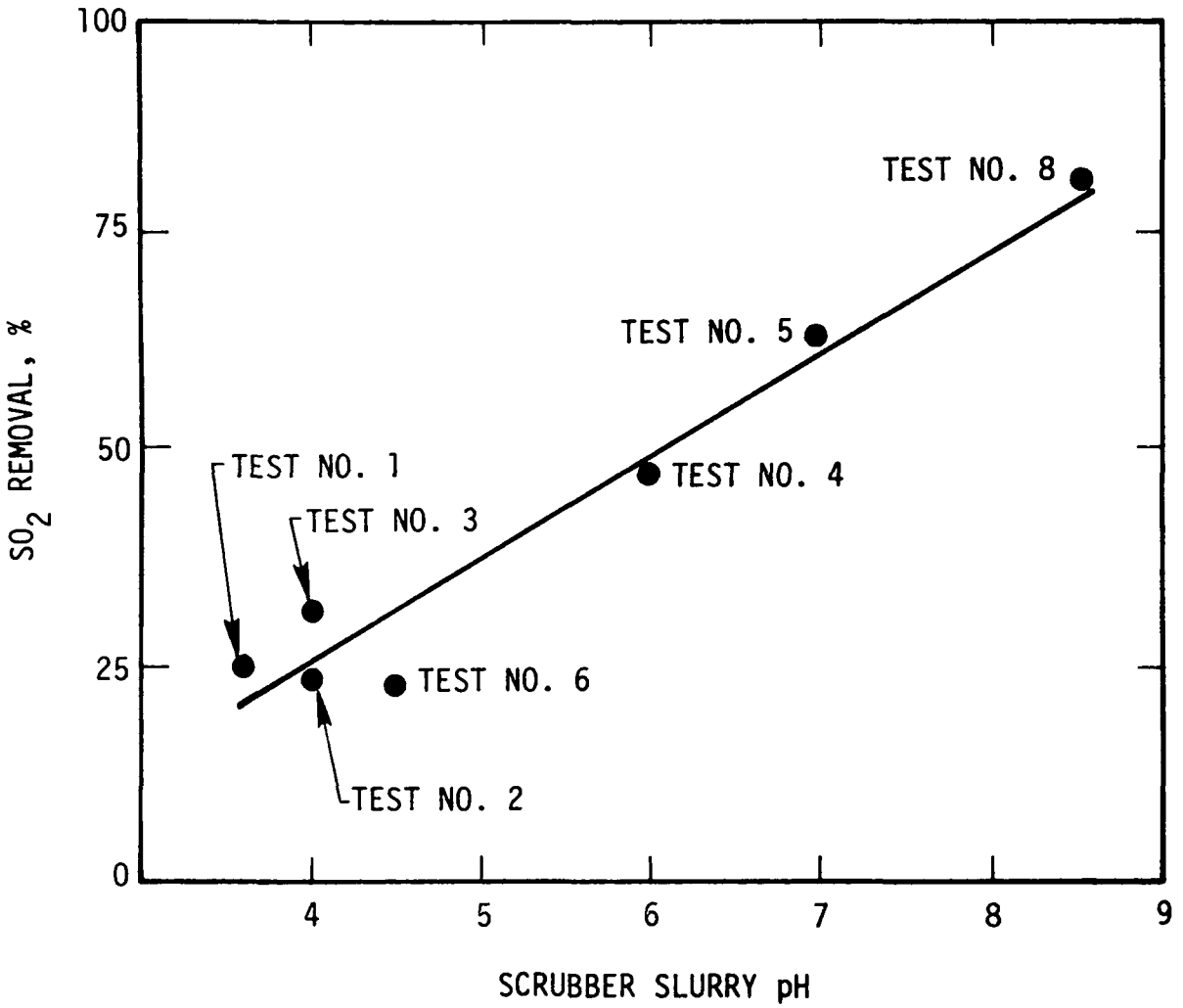

Figure A-1. Summary of Four Corners 2A Scrubber Module Isolation Testing: Effect of pH on SO_2 removal.[4]

COLUMBUS AND SOUTHERN OHIO ELECTRIC COMPANY

CONESVILLE 5 AND 6

BACKGROUND INFORMATION[5]

The Conesville Power Station is located on the Muskingum River, near Coshocton, in northeast Ohio. The plant's current capacity is 2055 MW (gross). Conesville 1,2, and 3 have a combined capacity of 433 MW (gross) and share a common stack. Conesville 4 is rated at 800 MW (gross) and Conesville 5 and 6 are each rated at 411 MW (gross). Conesville 4,5, and 6 each have a separate stack.

The Conesville 6 steam generator is a dry-bottom, pulverized-coal-fired unit supplied by Combustion Engineering (CE). A mixture of high-sulfur (from 4.2 percent to 5.1 percent sulfur) Ohio coals is burned with a heating value from 24,000 to 26,000 kJ/kg (10,300 to 11,200 Btu/lb) and ash content from 12 to 19 percent. A conveyor delivers 40 percent of the coal from a mine complex 11 km (7 miles) from the plant site. The remainder is trucked in from southeast Ohio.

POLLUTION CONTROL[6]

The air pollution control system at Conesville 6 is identical in design to the system originally installed at Conesville 5. It consists of two parallel turbulent contact absorber (TCA) towers supplied by the Air Correction Division of Universal Oil Products (UOP). The towers are preceded by a Research Cottrell (RC) cold-side electrostatic precipitator (ESP). Each module consists of two stages of 3.8-cm (1.5-in.) solid rubber balls that provide the turbulent contacting surface between the lime

slurry and the flue gas. The modules were each originally designed to handle 60 percent of the flue gas flow.

The Conesville 5 FGD system has been modified by removing the second TCA stage of each of the two modules because it was discovered that the SO_2 design efficiency of 89.5 percent could be met without the second stage. Less power is thus consumed by the FGD system, and it is hoped that a higher system availability can be achieved.

Detailed information about Conesville 5 and 6 is presented in Table A-2.

PERFORMANCE HISTORY[7,8]

The A-module of Conesville 5 began operation in November 1977 after startup was delayed by a fire. Conesville 5 was taken out of service for a scheduled 3-month overhaul in December 1977, when the carbon steel stack liner was replaced with an acid brick liner.

After Conesville 5 was returned to service in March 1978, problems were encountered with the thickener. An excess of flocculant was caused by a malfunction of the feed system, and the tank had to be drained.

From March through September 1978, system availability averaged 44 percent; a high of 66 percent occurred during April. A low of 18 percent in August was caused by scale buildup in the mist eliminator that required removal, and by outage time for replacement of some of the balls in the TCA regions.

Conesville 6 was placed in service in June 1978. Initial problems included a loss of control of the bypass system louvered damper, and backpressure buildups causing automatic boiler shutdowns. In July, the damper controls were adjusted in an attempt to correct the problem. Plugging problems have been experienced with the fiber-reinforced plastic transfer line from the thickener to the fixation system supplied by IU Conversion Systems (IUCS). The utility has reported that the bypass control dampers, as well as the sludge line, typically require high maintenance.

TABLE A-2. FGD SYSTEM DATA FOR CONESVILLE 5 AND 6, CONESVILLE, OHIO

Unit rating (gross), MW	411
(net), MW	375
Fuel	Bituminous coal
Average fuel characteristics:	
Heating value, kJ/kg (Btu/lb)	25,240 (10,850)
Ash, %	15.1
Moisture, %	7.5
Sulfur, %	4.7
Chloride, %	
FGD process	Lime (thiosorbic)
FGD system supplier	Air correction division, UOP
Application	New
Status	Operational
Startup date:	
Initial	January 1977
Commercial	June 1978
Design removal efficiency:	
Particulate, %	99.6
Sulfur dioxide, %	89.5
Actual removal efficiency:	
Particulate, %	
Sulfur dioxide, %	
Water loop	Open
Total water makeup,	
liters/s per net MW	0.08
(gal/min per net MW)	1.25
Sludge disposal	Stabilized sludge disposed of in an onsite landfill

From June through September 1978, system availability averaged 61 percent. A high of 77 percent occurred in July; a low of 50 percent occurred in June. Monthly operating hours have increased from 174 in June to 372 in September.

FUTURE PLANS[9]

Columbus and Southern Ohio Electric has plans for two new units to come on line in 1983. Poston 5 and 6 are each rated at 375 MW and will burn high-sulfur (approximately 2.5-percent sulfur) Ohio coal. FGD systems are being considered for both Poston 5 and 6, but neither a vendor nor a process has been selected.

DUQUESNE LIGHT COMPANY

ELRAMA POWER STATION

POLLUTION CONTROL[10]

The emission control system at the Elrama Power Station consists of five single-stage variable-throat venturi scrubbers arranged in parallel. Each module is designed to treat 255 m^3/s (540,000 ft^3/min) of flue gas at 151°C (303°F). The venturi scrubbers are designed to accommodate four boilers and are located downstream of mechanical collectors and ESP's, which are installed in series on each of the four boilers. The scrubbed gas enters a 4100-kW (5500-hp) induced-draft fan, and are discharged to an external mist eliminator vessel. A common duct transfers the gas through a direct oil-fired reheat system, to a wet gas stack approximately 122 m (400 ft) high. The sludge produced is stabilized by the Poz-O-Tec method of IU Conversion Systems (IUCS) and hauled to an offsite landfill.

Table A-3 presents additional design information.

PERFORMANCE HISTORY[11-13]

More sludge handling equipment was placed in service in April 1978. The two original thickeners, each 7.6 m (25 ft) in diameter, were replaced by two thickeners 36.6 m (120 ft) in diameter; and the IUCS equipment was upgraded. Full-time operation of the scrubber system with thiosorbic lime containing from 8 to 9 percent magnesium oxide (MgO) began after the end of a coal strike in late March 1978. Initial testing indicated that the unit was well within particulate emission standards, but the SO_2 emission tests were not handled properly and will be redone.

TABLE A-3. FGD SYSTEM DATA FOR ELRAMA POWER STATION, ELRAMA, PENNSYLVANIA

Unit rating (gross), MW	510
(net), MW	494
Fuel	Coal
Average fuel characteristics:	
Heating value, kJ/kg (Btu/lb)	26,400 (11,350)
Ash, %	21
Moisture, %	
Sulfur, %	2.2
Chloride, %	
FGD process	Lime (thiosorbic)
FGD system supplier	Chemico
Application	Retrofit
Status	Operational
Startup date:	
Initial	October 1975
Commercial	September 1976 (all five modules)
Design removal efficiency:	
Particulate, %	99
Sulfur dioxide, %	83
Actual removal efficiency:	
Particulate, %	
Sulfur dioxide, %	
Water loop	Open
Total water makeup, liters/s per MW (gal/min per MW)	
Sludge disposal	Stabilized sludge trucked to an offsite landfill

The fourth boiler was tied into the FGD system in January 1978. Full-scale scrubber operations, however, were hampered by low demand and the unavailability of coal. A coal strike forced Elrama to shut down on February 11, 1978; and repairs and modifications were performed on the FGD system. Boiler exit dampers were lined with 316 stainless steel (SS) on areas of high erosion; and holes in the wet gas duct were repaired and relined with Ceilcote. After returning to service in late March, plugging within the mist eliminator became a problem. Low pH resulting from failures of the lime handling and slurry preparation systems was a primary cause of the plugging, and it was necessary to shut down the lime mixing basin to clean out excessive grit and solids buildup.

The utility is also investigating ways to improve the water balance by intermittantly blending thickener supernatant for the mist eliminator wash with clean service water.

DUQUESNE LIGHT COMPANY

PHILLIPS POWER STATION

POLLUTION CONTROL[14]

The pollution control equipment at the Phillips Power Station consists of four parallel scrubbing trains that are situated downstream of the mechanical collectors and ESP's, and are installed in series on each of the six boilers. Each train is a Chemico single-stage variable-throat venturi scrubber designed to treat 255 m^3/s (540,000 acfm) of flue gas at 151°C (303°F). One train has a second-stage scrubber after a wet induced-draft fan that was designed to provide additional removal of SO_2. Duquesne Light intended to install second-stage scrubbers on the remaining three modules, but tests have indicated that single-stage scrubbers can achieve the required SO_2 removal efficiency of 83 percent by using thiosorbic lime in the existing venturis. Dravo is supplying the Phillips Power Station with thiosorbic lime containing from 8 to 9 percent MgO; and some design modifications have been implemented, such as the addition of more lime storage and slaker capacity, and a third thickener 23 m (75 ft) in diameter. Sludge is treated by the IUCS Poz-O-Tec method and trucked to an offsite landfill.

The scrubbed gases are discharged to an external mist eliminator and through a common duct to a direct oil fired reheat system. The stack is a wet gas type approximately 122-m (400-ft) high. Table A-4 presents additional design information.

PERFORMANCE HISTORY[15,16]

Tests with thiosorbic lime to check SO_2 removal efficiencies began late in May 1977, but were terminated prematurely because

TABLE A-4. FGD SYSTEM DATA FOR PHILLIPS POWER STATION, SOUTH HEIGHT, PENNSYLVANIA

Unit rating (gross), MW	410
(net), MW	387
Fuel	Coal
Average fuel characteristics:	
Heating value, kJ/kg (Btu/lb)	26,400 (11,350)
Ash, %	18.2
Moisture, %	
Sulfur, %	2.2
Chloride, %	
FGD process	Lime
FGD system supplier	Chemico
Application	Retrofit
Status	Operational
Startup date:	
Initial	July 1973
Commercial	
Design removal efficiency:	
Particulate, %	99
Sulfur dioxide, %	83
Actual removal efficiency:	
Particulate, %	
Sulfur dioxide, %	
Water loop	Open
Total water makeup, liters/s per MW (gal/min per MW)	
Sludge disposal	Stabilized sludge disposed of in an offsite landfill

of leaking in a duct leading to the stack. The problem was corrected; and tests continued, although occasional problems with the slaker and feeder caused interruptions. Full-time use of thiosorbic lime as the scrubbing reagent began in late March 1978, when the Phillips Power Station returned to service after a 2-month coal strike. Tests conducted by Allegheny County in late August 1978 indicated that the Phillips Station was in compliance with the regulation limiting emissions of SO_2 to 258 mg/J (0.6 lb/10^6 Btu). Thus, the system was removing approximately 83 percent of the inlet SO_2 when coal containing 2 percent sulfur was burned.

Problems have occurred because of grit buildup in the lime handling and slurry preparation systems. Occasional failure of these systems has caused low-pH swings and mist eliminator plugging. It was thus necessary to shut down the lime mixing basin to clean out excessive grit and solids. Water balance problems have also been attributed to grit buildup, and ways to improve the water balance with thickener supernatant have been investigated.

Another problem has been insufficient dry fly ash to mix with the sludge. The product from the IUCS system is not as solid as desired and has leaked from transport trucks en route to the final disposal site. Replacement of the present cyclone collectors is being investigated as a solution the problem.

KANSAS CITY POWER AND LIGHT

HAWTHORN 3 AND 4

BACKGROUND INFORMATION[17]

The Hawthorn Power Station of Kansas City Power and Light is located in a heavily industrialized area on the north bank of the Missouri River in East Kansas City, Missouri. The plant contains five coal-fired power generating units. Hawthorn 1 and 2 are considered peaking units, each nominally rated at 80 MW. Hawthorn 3 and 4 are cyclic boilers, each nominally rated at 100 MW, when burning coal. These four boilers were built and placed in service between 1950 and 1955. Hawthorn 5 was placed in service in early 1970; it operates as a base-load unit at a rated capacity of 480 MW.

The steam generators at the Hawthorn Power Station are all dry-bottom, pulverized-coal-fired units designed and manufactured by Combustion Engineering, which also manufactured the FGD systems for this plant.

Two grades of coal are burned. One has a heating value of 26,500 kJ/kg (11,400 Btu/lb), ash content of 14 percent, and sulfur content of 3 percent. The other has a heating value of 22,800 kJ/kg (9800 Btu/lb), ash content of 11 percent, and sulfur content of 0.6 percent.

POLLUTION CONTROL[18,19]

Only Hawthorn 3 and 4 are fitted with FGD systems. Originally, both FGD systems operated by furnace injection of ground limestone rock followed by a flue gas wet scrubbing system in which both the SO_2 and the furnace-calcined limestone were scrubbed and allowed to react in a reaction tank. In Feburary 1977, a

conversion was made to tail-end lime slurry systems for both units. Each system now includes two marble-bed scrubber modules that can be bypassed in case of an emergency. Reheat is provided by a finned-tube steam system downstream of a chevron-type mist eliminator. The total gas capacity of each FGD system is 306 m^3/s (648,000 acfm) at 149°C (300°F). Spent slurry from each system is discharged to a clarifier tank 35 m (115 ft) in diameter. Overflow from this tank flows to a clean well tank, where makeup water from the Missouri River is added. The discharge from the clear well tank is recycled to the FGD system. The underflow from the clarifier is pumped without treatment to a 160-acre pond that is also used for disposal of fly ash from the other boilers.

Additional system design data are presented in Table A-5.

PERFORMANCE HISTORY[20,21]

Tail-end lime scrubbing operations began early in 1977 for Hawthorn 3 and 4. Particulate testing soon after startup indicated that the new systems were well within the emission standard of 73 ng/J (0.17 lb/10^6 Btu). Tests of SO_2 removal efficiency have not been run because the emission limitation regulation is not established for this station.

Problems with process chemistry were encountered, but quickly corrected. Shortly after startup, the FGD systems were pulled off line so that the underbed spray headers could be replaced with 316L SS headers. A strike at the Hawthorn Plant in mid-1978 has hampered recordkeeping, but the FGD system has remained operational.

TABLE A-5. FGD SYSTEM DATA FOR HAWTHORN 3 AND 4, KANSAS CITY, MISSOURI

Unit rating (gross), MW (net), MW	100 each
Fuel	Coal
Average fuel characteristics:	
Heating value, kJ/kg (Btu/lb)	24,770 (10,650)
Ash, %	12.5
Moisture, %	
Sulfur, %	2.0
Chloride, %	
FGD process	Lime
FGD system supplier	Combustion Engineering
Application	Retrofit
Status	Operational
Startup date:	
Initial	August 1972
Commercial	November 1972
Design removal efficiency:	
Particulate, %	99
Sulfur dioxide, %	70
Actual removal efficiency:	
Particulate, %	
Sulfur dioxide, %	
Water loop	Open
Total water makeup, liters/s per MW (gal/min per MW)	
Sludge disposal	Unstablized sludge disposed of in unlined pond

KENTUCKY UTILITIES

GREEN RIVER 1,2, AND 3

POLLUTION CONTROL[22,23]

Acid fallout from the plume at Green River 1,2, and 3 damaged employees' automobiles and the superstructure of the nearby substation, so that design modifications were necessary. American Air Filter was authorized to install an indirect hot-air reheat system to raise the stack gas temperature by 28°C (50°F). The system utilizes extraction steam from an adjacent unit to heat ambient air, which is injected into the stack to increase the exhaust temperature. The radial-vane mist eliminator was modified to reduce formation of acid mist and fouling, but this modification was not as effective as was hoped. The unit has since been replaced with a chevron-type mist eliminator.

Other modifications included replacement of the smaller balls in the mobile bed contacter with larger balls to reduce ball migration, replacement of the rubber-covered pump impellers with Ni-hard impellers, and redesigning the degritter to reduce grit pickup.

Table A-6 presents additional system design data.

PERFORMANCE HISTORY[24-26]

A strike at the Green River Plant by operating personnel began in July 1977 and caused the plant to be shut down through November 1977, although the FGD system was available for operation. When restarted, the winter weather caused numerous freeze-ups and resulting outages. In January 1978, the sludge line to the pond froze; and the system had to be shut down after 170 hours of operation. Because of emergency conditions, the utility

TABLE A-6. FGD SYSTEM DATA FOR GREEN RIVER 1, 2, and 3, CENTRAL CITY, KENTUCKY

Unit rating (gross), MW	64
(net), MW	61
Fuel	Coal
Average fuel characteristics:	
Heating value, kJ/kg (Btu/lb)	25,120 (10,800)
Ash, %	13.4 (high-sulfur coal)
Moisture, %	12.1 (high-sulfur coal)
Sulfur, %	4.0 (high-sulfur coal); 1.0 (low-sulfur coal)
Chloride, %	
FGD process	Lime
FGD system supplier	American Air Filter
Application	Retrofit
Status	Operational
Startup date:	
Initial	September 1975
Commercial	June 1976
Design removal efficiency:	
Particulate, %	99.5
Sulfur dioxide, %	80.0
Actual removal efficiency:	
Particulate, %	
Sulfur dioxide, %	
Water loop	Closed[a]
Total water makeup,	
liters/s per net MW	4.7
(gal/min per net MW)	75
Sludge disposal	Unstabilized sludge disposed of in an onsite sludge pond

[a]System water loop verified with utility during Oct.-Nov. 1978 EPA Utility FGD Survey Report update.

concentrated on electrical generation; and the FGD system was not returned to service until April. During the outage, torn gaskets and other weather-related problems were corrected. In May, the screens on the suction side of the pumps that deliver the slurry from the preparation area to the nozzles kept plugging. The utility reported that this is a recurring problem caused by large grit in the slurry. Other FGD system outages through September 1978 have been for routine maintenance and correction of bleed pump problems.

From November 1977 through September 1978, the scrubber was available 5540 hours and operated 2912 hours. The boilers were in service 4713 hours. Thus, system availability, operability, reliability, and utilization in the 11-month period were 63, 58, 82, and 34 percent, respectively.

From October 17 through 19, 1978, PEDCo Environmental conducted tests at the Green River Station to determine scrubber efficiency. These tests indicated that the SO_2 removal efficiency averaged 81.2 percent. The average outlet SO_2 concentration was 555 ng/J (1.29 lb/10^6 Btu).

LOUISVILLE GAS AND ELECTRIC

CANE RUN 4

POLLUTION CONTROL[27-29]

Many problems were encountered at Cane Run 4 during the FGD system's initial operating phase, especially poor gas flow distribution and excessive pressure drop. As a result, the booster fans lacked sufficient capacity; and the maximum boiler output ranged from 150 to 155 MW, although the gross rating is 190 MW. To remedy these problems, as well as the other problems described below, a number of major system modifications were made during a 3-month overhaul period which extended from April 18, 1977, to July 17, 1977.

Turning vanes were installed in the flooded elbow and the base of each scrubber; and the mist eliminator was converted to a chevron type by cutting away portions of the mist eliminator wheel. At high temperatures, the original spray nozzle casings expanded so that the spinner vanes stuck out the front and caused the nozzle to plug. To correct this problem, the nozzles were replaced with ones constructed of sturdier ceramic material. More spray headers were also installed above the mobile beds, and the pump capacity was increased. The L/G ratio was thus increased to approximately 8 liters/m^3 (60 gal/10^3 ft^3).

Other modifications were made to improve overall SO_2 removal efficiency. Underbed sprays were added to improve circulation of the mobile bed balls; and existing pH meters were replaced with new meters so that the pH could be monitored more precisely. "Black-lime", which comes from a carbide slag operation and contains from 2 to 4 percent MgO, was also put into use.

The stack at Cane Run 4 was approximately 25 years old and constructed of acid brick. No stack liner or reheat system was provided in the original FGD system design, and condensate in the stack was causing acid corrosion. Louisville Gas and Electric thus installed direct oil-fired heaters at the base of the stack in conjunction with the turning vanes to provide a good flow and mix. These heaters were designed to increase stack gas temperature from 22° to 28°C (40° to 50°F). The brickwork inside the stack was removed and replaced with wire mesh covered with gunite. Also, the duct work between the mist eliminator and the stack was relined with acid-resistant concrete. Table A-7 presents additional design information.

PERFORMANCE HISTORY[30,31]

The modifications to the FGD system were completed in July 1977. Early in August, the system was tested for compliance with SO_2 emission regulations; it met the Jefferson County removal requirement of 85 percent and the Federal standard of 515.9 ng/J (1.2 lb/10^6 Btu) of heat input. The testing was handled by EPA personnel and indicated an SO_2 removal efficiency between 86 and 89 percent for coal containing from 3.3 to 3.4 percent sulfur coal. This efficiency amounted to outlet emissions of 343.9 ng/J (0.8 lb/10^6 Btu).

The operability of the FGD system was greater than 90 percent from August through December 1977. In January 1978, after a lime feed line froze late in December, the system operated intermittently.

A coal strike forced the generating unit to be shut down during February 1978. It came back on line in March, and no FGD system forced outages have been reported through September 1978.

TABLE A-7. FGD SYSTEM DATA FOR CANE RUN 4, LOUISVILLE, KENTUCKY

Unit rating (gross), MW	190
(net), MW	178
Fuel	Coal
Average fuel characteristics:	
Heating value, kJ/kg (Btu/lb)	26,750 (11,500)
Ash, %	15.5
Moisture, %	
Sulfur, %	3.8
Chloride, %	
FGD process	Lime (carbide)
FGD system supplier	American Air Filter
Application	Retrofit
Status	Operational
Startup date:	
Initial	August 1976
Commercial	
Design removal efficiency:	
Particulate, %	99
Sulfur dioxide, %	85
Actual removal efficiency:	
Particulate, %	
Sulfur dioxide, %	
Water loop	Open
Total water makeup,	
liters/s per net MW	0.04
(gal/min per net MW)	0.6
Sludge disposal	Stabilized sludge disposed of in an onsite sludge pond

LOUISVILLE GAS AND ELECTRIC

CANE RUN 5

BACKGROUND INFORMATION[32]

The Cane Run Power Station in Louisville, Kentucky, is operated by the Louisville Gas and Electric Company. The station has six units, which provide a total steam turbine generating capacity of 992 MW (net).

Cane Run 5 is a coal-fired boiler with a continuous capacity of 183 MW (net) and 200 MW (gross). The coal burned has an average heating value of 26,750 kJ/kg (11,500 Btu/lb), an average sulfur content of 3.8 percent, and an average ash content of 15.5 percent.

POLLUTION CONTROL[33,34]

The emission control system for Cane Run 5 was supplied by Combustion Engineering and consists of two spray towers downstream of the existing electrostatic precipitator (ESP), which provides primary particulate control. Carbide lime is the scrubbing reagent and is injected into each spray tower through a series of three spray stages. At full load, the gas velocity is 3 m/s (10 ft/s), with a pressure drop of approximately 0.75 kPa (3 in. H_2O) across the absorber. The FGD system capacity is 330 m^3/s (700,000 acfm) at 154°C (310°F). The absorber L/G ratio ranges from 8 to 13 l/m^3 (60 to 100 gal/ft^3). An inline steam reheat increases stack gas temperature by 22°C (40°F).

The FGD system produces 16 liters/s (248 gal/min) of spent absorbent, with a solids content of 20 percent. This spent slurry is discharged to a thickener 33.5 m (110 ft) in diameter.

After stabilization, the sludge is disposed of in an onsite clay-lined pond.

Additional FGD system information is presented in Table A-8.

PERFORMANCE HISTORY[35]

The FGD system at Cane Run 5 began operation on December 29, 1977. Some minor modifications were necessary for controls that were not operating properly. Cane Run 5 was removed from service in February 1978 because of a coal strike and was restarted in March. The FGD system operated approximately 91 hours in March, although startup problems still caused intermittent operation. From April through September 1978, operability was 80 percent or greater. Trouble with the reheat steam coils caused some outage time; the welds at the end of each bank of coils have been fouling since startup.

Performance tests were conducted during the period from April through May 1978. Reports by the utility indicate that the tests were inconclusive because of poor handling of original data and improper test procedures.

FUTURE PLANS[36]

Louisville Gas and Electric is installing a double alkali scrubbing system at Cane Run 6. The system is being supplied by A. D. Little/Combustion Equipment Associates and is expected to begin initial operation in December 1978.

TABLE A-8. FGD SYSTEM DATA FOR CANE RUN 5, LOUISVILLE, KENTUCKY

Unit rating (gross), MW	200
(net), MW	183
Fuel	Coal
Average fuel characteristics:	
Heating value, kJ/kg (Btu/lb)	26,750 (11,500)
Ash, %	15.5
Moisture, %	
Sulfur, %	3.8
Chloride, %	
FGD process	Lime (carbide)
FGD system supplier	Combustion Engineering
Application	Retrofit
Status	Operational
Startup date:	
Initial	December 1977
Commercial	June 1978
Design removal efficiency:	
Particulate, %	99
Sulfur dioxide, %	85
Actual removal efficiency:	
Particulate, %	
Sulfur dioxide, %	
Water loop	Open
Total water makeup, liters/s per MW (gal/min per MW)	
Sludge disposal	Stabilized sludge disposed of an onsite sludge pond

LOUISVILLE GAS AND ELECTRIC

MILL CREEK 3

BACKGROUND INFORMATION[37,38]

The Mill Creek Power Station in Louisville, Kentucky, is owned and operated by Louisville Gas and Electric. The plant has three operational units, which provide a total capacity of 1085 MW (net). A fourth unit currently under construction will bring overall plant capacity to 1580 MW (net).

Mill Creek 3 is a coal-fired boiler that has a capacity of 425 MW (net) and was supplied by Babcock and Wilcox. The coal burned has an average heat content of 26,750 kJ/kg (11,500 Btu/lb), sulfur content of 3.8 percent, and ash content of 11.5 percent.

POLLUTION CONTROL[39-41]

The emission control system at Mill Creek 3 was installed by American Air Filter (AAF). It is similar in design to, although larger than, the system at Cane Run 4. Carbide lime is the scrubbing reagent. Design modifications found necessary at Cane Run 4 have been incorporated at Mill Creek. Four mobile-bed absorbers are preceded by ESP's also supplied by AAF. The scrubber linings for the entire FGD system are Precrete applied to carbon steel. The system operates in an open loop mode with fresh water makeup at 9.5 liters/s (150 gal/min). A steam reheat system is provided for the exiting flue gas, and the scrubbing waste is stabilized with fly ash and lime.

Additional system design data are presented in Table A-9.

TABLE A-9. FGD SYSTEM DATA FOR MILL CREEK 3, LOUISVILLE, KENTUCKY

Unit rating (gross), MW (net), MW	 425
Fuel	Coal
Average fuel characteristics:	
Heating value, kJ/kg (Btu/lb)	26,750 (11,500)
Ash, %	11.5
Moisture, %	
Sulfur, %	3.8
Chloride, %	
FGD process	Lime (carbide)
FGD system supplier	American Air Filter
Application	New
Status	Operational
Startup date:	
Initial	August 1978
Commercial	
Design removal efficiency:	
Particulate, %	99
Sulfur dioxide, %	85
Actual removal efficiency:	
Particulate, %	
Sulfur dioxide, %	
Water loop	Open
Total water makeup,	
liters/s per net MW	0.02
(gal/min per net MW)	0.35
Sludge disposal	Stabilized sludge disposed of in a sludge pond

PERFORMANCE HISTORY[42]

The FGD system at Mill Creek 3 began operation on August 13, 1978, and logged 576 hours in September, for an average operability of 81 percent. Initial problems were encountered with some piping made of fiber-reinforced plastic (FRP); and certain pumps experienced bearing and shaft failures.

FUTURE PLANS[43]

Lime/limestone FGD systems have been ordered from Combustion Engineering for Mill Creek 1 and 2, each of which is 330 MW (net). The Mill Creek 1 system is expected to be put into operation in January 1981; the Mill Creek 2 system, one year later. A compliance schedule for these two units has been submitted to the Jefferson County Air Pollution Control District.

A mobile-bed absorber similar to that at Mill Creek 3 will be installed by AAF at Mill Creek 4 (a coal-fired unit currently under construction). The capacity of Mill Creek 4 will be 495 MW (net), and FGD operations are expected to begin in June 1980.

LOUISVILLE GAS AND ELECTRIC

PADDY'S RUN 6

PERFORMANCE HISTORY[44-47]

After startup in the spring of 1973, the FGD system at Paddy's Run 6 operated with so few problems that the EPA sponsored a test program there to determine some of the factors attributing to the success. Tests began on October 25, 1976, and were carried out in four phases.

The initial phase involved characterizing the Paddy's Run system as it normally operated, with carbide lime as the absorbent. After steady state operating conditions were established, key performance parameters were monitored and used to calculate SO_2 removal rates, sulfite/sulfate precipitation rates, lime utilization efficiencies, and the sulfite oxidation rate. It was noted that the system oxidation rate was low, with less than 10 percent of the SO2 removed from the flue gas being oxidized to sulfate.

Phase two of the testing began in mid-March 1977. Commercial lime was used as the alkaline additive rather than carbide sludge. The major goal of this phase was to identify differences in operation that might result from changing the additive. Although SO_2 removal rates were not affected, the system operated in or near a supersaturated mode most of the time, and produced large masses of gypsum under varying conditions.

The third and fourth testing phases overlapped. Phase three was to include hold tank modifications to determine whether high lime utilization efficiencies could be attained with short hold tank residence times. Phase four was to determine the affects of chloride and magnesium levels on subsaturated gypsum operation.

The fourth phase began with the addition of a slurry containing 55 percent magnesium hydroxide from Dow Chemical to the commercial lime. With this addition, the liquid phase magnesium remained in the 4000 ppm range, and very high SO_2 removal rates were achieved, while gypsum saturations approached zero. As the magnesium level was lowered to 2000 ppm, calcium and relative saturation levels began to rise tremendously, and it was necessary to add more magnesium to the system. A magnesium level between 2400 and 3000 ppm was found to be the best level for system control.

During August 1977, the third phase occurred. There were tests to eliminate the reaction tank and to reduce the reaction time from 35 minutes to a period between 3 and 5 minutes. No serious problems occurred; however, it could not be determined whether calcium sulfite scaling was promoted during the short duration of the tests. The solids content of thickener underflow decreased with the reduced reaction tank residence.

The completion of the fourth phase of testing on August 31, 1977, involved adding calcium chloride and reducing reaction time to produce conditions similar to ones from firing high-chloride coal. Initially, the chloride level was 9000 ppm, which was then reduced to 3000 ppm. To compensate for chloride addition, magnesium levels were increased to 3500 ppm. The SO_2 removal efficiencies were around 99 percent, and gypsum relative saturation levels were very low. No operational problems were encountered. Thus, high levels of chlorides can be controlled with high levels of magnesium.

In September 1977, Paddy's Run was no longer needed to supply electricity and was taken out of service until April 1978, when it was operated for only a few hours. Intermittent operation totaling 8 to 10 days occurred in June and July. In September 1978, the unit was placed in service for two weeks, when a new type of flocculant was tested in the thickener. The results of the test may affect the type of flocculant used in the future at other Louisville Gas and Electric units.

MINNKOTA POWER COOPERATIVE

MILTON R. YOUNG 2

BACKGROUND INFORMATION[48]

The Milton R. Young Station in Center, North Dakota, is owned and operated by Minnkota Power Cooperative and Square Butte Electric Cooperative. The station has two units, providing a total capacity of 690 MW.

Milton R. Young 2 has a maximum gross capacity of 477 MW and a maximum net capacity of 408 MW. The boiler was manufactured by Babcock and Wilcox, and placed in service in 1977. The maximum flue gas flow is 954 m^3/s (2,021,000 acfm) at 179°C (355°F).

The fuel burned is lignite, with an average heating value of 15,000 kJ/kg (6,500 Btu/lb), sulfur content of 0.7 percent, and ash content of 7 percent. The moisture content is 38 percent.

POLLUTION CONTROL[49]

The emission control system for this unit was supplied by A. D. Little/Combustion Equipment Associates. It consists of two spray towers that utilize alkaline fly ash and lime supplement as the scrubbing reagents. Primary particulate control is provided by a cold-side ESP from Wheelabrator-Frye. Design criteria and operating parameters for the FGD system were determined during an extensive test program at a pilot plant with a gas flow of 2.4 m^3/s (5,000 acfm). The program was conducted by Minnkota Power Cooperative and the system suppliers in conjunction with the Minnesota Power and Light Company and the Grand Forks Energy Research Center.

Boiler flue gas at 849 m^3/s (1.8×10^6 acfm) and 171°C (34°F) first passes through the ESP. Inlet particulate loading

ranges from 1.6 to 3.4 g/m^3 (0.7 to 1.50 gr/ft^3) and averages approximately 2.6 g/m^3 (1.15 gr/ft^3). The ESP is designed to remove 99.5 percent of particulates, so that outlet loading averages 0.01 g/m^3 (0.005 gr/ft^3).

After the ESP, 85 percent of the flue gas is routed to the FGD system. When coal with a maximum sulfur content of 1.3 percent is burned, approximately 1900 ppm (dry) SO_2 enters the FGD system. The flue gas contacts the scrubbing solution in a series of vertical spray zones. The scrubbing solution contains solubilized calcium oxide, magnesium oxide, and sodium oxide from the fly ash collected in the ESP's; lime is added to the solution to increase SO_2 removal and pH control. When the SO_2 inlet concentration is 1900 ppm, the absorbers remove approximately 85 percent of the SO_2 from the scrubbed gas. Because 85 percent of the flue gas stream is treated, the total removal efficiency is approximately 70 percent and the overall outlet SO_2 concentration is 535 ppm (dry).

When the boiler fires coal with a maximum sulfur content of 1.3 percent, the FGD system operates at an L/G ratio of 11 liters/m^3 (80 gal/10^3 ft^3). The pH of the absorbent ranges from 6.4 to 6.5, and the level of suspended solids is 12 percent. Lime is added at 3.6 Mg/h (4 tons/h).

After passing the spray zone of the absorbers, the scrubbed gases enter Chevron-type mist eliminators. A wash tray beneath each mist eliminator dilutes any entrainment to prevent plugging, scaling, and eventual restriction of gas flow. The wash trays are joined to separate recirculation loops and tanks to ensure that the wash water remains low in suspended solids and dissolved salts. To prevent plugging, sprays irrigate the mist eliminators with a mixture of makeup water and clarified liquor from each tray loop. Also, sprays flood the underside of the trays and the areas between each tray.

The scrubbed gas stream is reheated by mixing it with the bypassed flue gas at 171°C (340°F). This raises the temperature

of the saturated scrubbed gas from 57° to 74°C (135° to 165°F); and the gases are discharged to the atmosphere through the stack.

The spent scrubbing solution is discharged to a recycle tank at the bottom of the spray towers, where the chemical reactions are completed. Flue gas cleaning wastes, including unused reagent, sulfite/sulfate salts, and fly ash, are conveyed to a thickener, where the waste solids settle out. The overflow is returned to the process and used for preparation of the fly-ash slurry. The thickener underflow has a maximum solids content of 40 percent and is piped to a vacuum thickener building, which houses two rotary-drum vacuum filters for additional dewatering. Filter cake with a solids content of 70 percent is produced at 45 Mg/h (50 tons/h) and transported by conveyor to three 32-Mg (35-ton) off-the-road trucks, which haul it to a mine landfill for final disposal. Water recovered in the vacuum filters is also used for preparation of fly-ash slurry. During emergency periods of mechanical malfunction or high flowrates, sludge from the vacuum filters can be piled outside the vacuum filter building for handling by front-end loaders and off-the-road trucks.

Additional system design data are presented in Table A-10.

PERFORMANCE HISTORY[50,51]

FGD operations at Milton R. Young 2 began in September 1977 and were initially intermittent, mainly because of problems arising from the severe winter weather. The freezing and rupture of many lines caused an outage during the first part of December for the installation of heat tracing in the liquid circuit. Other initial problems were reported with the guillotine gas dampers and flow meters.

An emergency shutdown that occurred on December 5, 1977, as a result of turbine bearing damage, made it necessary to postpone compliance testing scheduled during late December or early January. The unit came back online on February 21, 1978; it was discovered that a forced-draft fan in the FGD system had an oil

TABLE A-10. FGD SYSTEM DATA FOR MILTON R. YOUNG 2, CENTER, NORTH DAKOTA

Unit rating (gross), MW	477
(net), MW	408
Fuel	Lignite
Average fuel characteristics:	
Heating value, kJ/kg (Btu/lb)	15,000 (6,500)
Ash, %	8.0
Moisture, %	38
Sulfur, %	0.7
Chloride, %	
FGD process	Lime with alkaline fly ash
FGD system supplier	Arthur D. Little/Combustion Equipment Associates
Application	New
Status	Operational
Startup date:	
Initial	June 1977
Commercial	June 1978
Design removal efficiency:	
Particulate, %	99.6
Sulfur dioxide, %	75.0
Actual removal efficiency:	
Particulate, %	
Sulfur dioxide, %	
Water loop	Open
Total water makeup,	
liters/s per net MW	0.1
(gal/min per net MW)	1.56
Sludge disposal	Unstabilized sludge disposed of in a landfill

leak and a shaft alignment problem. The fan was taken offline for repairs, and one module of the FGD system was taken out of service. The repaired fan was placed back in service on April 10.

Other minor problems were encountered through September 1978. Large particles from the vacuum filter caused some rubber lining downstream to peel; modifications to correct this problem are being studied. Also, the guillotine damper chain drives were discovered to be underdesigned and had to be replaced.

Compliance testing took place at the unit during the week of June 5, 1978. Official results of the testing are not yet available.

MONTANA POWER

COLSTRIP 1 AND 2

PERFORMANCE HISTORY[52]

The overall performance of the FGD systems at Colstrip 1 and 2 has been good, but some problems have been encountered. The monitors for SO_2 on the inlets and outlets of the scrubber modules have exhibited erratic behavior. A corrective program, however, has improved monitor data. The inline pH probes were eroding and loosing sensitivity because of deposits on the elements. Slurry density monitors were also erratic, and a test program was undertaken to isolate these devices from vibration. Both slurry density and pH, key operating parameters, had to be taken manually.

Because of deposits (not calcium sulfate or calcium sulfite scale) at the entrance to the scrubber modules, system availability was reduced significantly. Tests showed that there was maldistribution of the dust entering each module and that gas velocity varied enormously from one side to the other of each entrance. A model study of the liquid flow on the tangential shelf above the venturi indicated that gas flow turning vanes in the duct elbow above each scrubber module and liquid guiding vanes and baffles on the tangential shelf would be required to reduce deposit buildup at each scrubber entrance. One module was modified with such encouraging results that modifications were made to the remaining five modules. Actual operating experience from the modules equipped has shown a significant reduction in cleaning time and has increased the time increment between inspection and cleanings.

The supplementary alkali feed system was difficult to use because of line plugging and equipment failure. The lime system was modified to a simpler design that would be less prone to plugging. Pinch valves were placed next to the scrubber on each feed line so that solids accumulation is automatically cleared as these valves are operated. Although the alkaline ash captured by the scrubber has generally kept scrubber pH within the control range, it was hoped that better control of the lime system would provide more constant pH and allow optimal SO_2 removal.

Failures of the protective flaked-glass lining on the carbon steel vessel walls and ducts occurred. These failures were evident prior to a major temperature excursion at Colstrip 1 in October 1976. The excursion followed a complete station power blackout and the failure of the emergency quench water supply system for the scrubbers to operate. The flaked-glass lining and the plastic mist eliminators were seriously damaged at Colstrip 1 and accounted for low scrubber availability during November and December 1976.

The motor of an induced-draft fan failed during November and December 1976 independently of the temperature excursion. This failure also reduced availability during November and December. Problems with other induced-draft fan motors early in 1977 also reduced scrubber availabilities.

The availability of 63 percent for Colstrip 2 during May 1977 reflects fan motor repairs and the modifications to reduce deposits at the scrubber entrances.

Inspection of an induced-draft fan motor during the spring of 1977 revealed cracks in the center plate next to the blades. All other fans were then cleaned and inspected. When cracks were found or when it was suspected that cracks might form, the faulty portions of fans were ground and welded; and stiffener plates were added. Availabilities during the summer of 1977 reflected this repair work.

Quick clean basket strainers were added to the suction piping of the two main recycle pumps of each vessel to replace

the startup strainers contained in a pipe spool. This replacement has allowed deposits and foreign materials to be removed before they clog spray nozzles and has also decreased maintenance and downtime on the vessels.

A program was undertaken to evaluate abrasion-resistant protective lining materials that could be used where the flue gas makes a 180-degree turn after the venturi downcomer and passes through the absorption sprays. The absorption spray slurry erodes the flaked-glass lining, which has been replaced at least once in each module since startup.

A program for evaluating corrosion-, temperature-, and abrasion-resistant materials in other areas of the scrubber was also undertaken. Small test patches and full linings were tried on several scrubber modules.

Plugging of spray nozzles under the wash trays on scrubber modules of both units occurred during May 1977 and forced the plants to shut down. The major cause of the problem was piping that had broken in the wash tray pond and allowed material from the pond to be ingested. A parallel pipeline and pumping system was installed to bring the units back on line, and repairs were made to the original piping.

The scrubber ponds are reclaimed by dredging sludge to a disposal pond approximately 3 miles from the plant site. Liquid from the disposal pond is returned to the scrubber ponds when the dredge is not operating. The scrubber sludge deposits in deltas in the ponds and contains 55 to 60 percent solids. The material hardens so well that the dredge has had difficulty in reslurrying the sludge. Because of the residual alkalinity, the deposited sludge becomes like cement. Improved cutters for the dredge and a delumper ahead of the dredge pump are expected to increase the solids handling capacity. The wash tray pond filled with solids more rapidly than had been expected, and the removal of these solids had been a problem. Each pond at the plant has its own chemical identity based on water balances. Because a dredge cannot be used to empty the wash tray pond without adversely

affecting the plant operation or pond water balances, a less efficient clamshell operation was put into use. Plans are being developed for the addition of another wash tray pond, so that one may be dewatered and cleaned while the other is in operation.

Many emission tests have been conducted on the Colstrip units. During the spring of 1977, EPA compliance tests for particulates, SO_2, and NO_x were completed on both plants; and emission monitor certification testing was conducted after the compliance tests. Table A-11 gives background information for the tests of SO_2 emissions and Tables A-12 and A-13 show the results of these tests. Data from full-scale operations agrees well with pilot plant data and shows that SO_2 emissions are well below the maximum allowed by the guarantee and Federal standards. Although efficiencies cannot be accurately calculated because scrubber inlet data have not been taken, an SO_2 removal efficiency from 70 to 75 percent and a particulate removal efficiency of 99.5 percent, predicted from pilot plant information, are apparently being achieved.

TABLE A-11. BACKGROUND INFORMATION FOR SO_2 EMISSIONS AT COLSTRIP 1 AND 2[53]

	Emissions of SO_2		
	kg/h (lb/h)	ng/J (lb/10^6 Btu)	ppm
Maximum emissions allowed by NSPS for a 358-MW unit	1844 (4063)	516 (1.2)	510
Scrubber guarantee for a 358-MW unit	1537 (3386)	430 (1.0)	425
Projected emissions from pilot plant for a 358-MW unit firing:			
Coal with a sulfur content of 0.78 percent and an ash content of 8.19 percent	633 (1394)	176 (0.41)	185
Coal with a sulfur content of 1.0 percent and an ash content of 12.85 percent	940 (2071)	262 (0.61)	260

TABLE A-12. TESTS OF SO_2 EMISSIONS AT COLSTRIP 1[53]

Date	Coal as received				Emissions of SO_2		
	Gross MW	Heating value, kJ/kg (Btu/lb)	Ash content, %	Sulfur content, %	kg/h (lb/h)	ng/J (lb/10^6 Btu)	ppm
2/76	353[a]	20,092 (8638)	9.03	0.83	720 (1587)	206 (0.48)	197
4/76	210[b]	20,611 (8861)	7.79	0.71	207 (456)	99 (0.23)	87
7/76	184[b]	20,485 (8807)	8.49	0.64	117 (258)	64 (0.15)	53
9/76	186[b]	20,080 (8633)	7.93	0.62	125 (275)	64 (0.15)	56
12/76	223[b]	19,524 (8394)	8.54	0.94	408 (898)	185 (0.43)	154
1/77	230[b]	20,280 (8719)	8.17	0.77	350 (770)	150 (0.35)	133
5/77	331[a]	20,587 (8851)	8.41	0.61	251 (552)	69 (0.16)	72
6/77	340[a]	20,673 (8888)	8.96	0.91	528 (1164)	140 (0.325)	122

[a] Three scrubber modules were online.

[b] Two scrubber modules were online.

TABLE A-13. TESTS OF SO_2 EMISSIONS AT COLSTRIP 2[53]

Date	Coal as received				Emissions of SO_2		
	Gross MW[a]	Heating value, kJ/kg (Btu/lb)	Ash content, %	Sulfur content, %	kg/h (lb/h)	ng/J (lb/10^6 Btu)	ppm
10/76	331	19,464 (8368)	7.96	0.56	594 (1309)	181 (0.42)	178
11/76	327	19,734 (8484)	7.86	0.59	316 (696)	99 (0.23)	83
12/76	324	20,213 (8690)	7.87	0.64	354 (780)	107 (0.25)	98
3/77	335	20,327 (8739)	7.96	0.63	301 (664)	86 (0.20)	84
6/77	305	20,709 (8929)	8.48	0.72	271 (597)	81 (0.19)	67

[a] Three scrubber modules were online.

PENNSYLVANIA POWER

BRUCE MANSFIELD 1 AND 2

POLLUTION CONTROL[54-56]

The emission control system for Bruce Mansfield 2 was manufactured by Chemico Air Pollution Control Company. It is a venturi wet-scrubbing system identical in design to the system installed on Bruce Mansfield 1. Table A-14 presents additional system design information for Bruce Mansfield 1 and 2.

PERFORMANCE HISTORY[55,56]

Initial operation of the emission control system at Bruce Mansfield 1 began on December 11, 1975; and commercial operation, on July 1, 1976. Initial operation of the emission control system at Bruce Mansfield 2 started in July 1977; and commercial operation, on October 1, 1977.

Many major design, mechanical, and chemical problems accompanied the initial and subsequent operation of the emission control systems. These problems included corrosion, scaling, mist eliminator inefficiency, reheater vibration, pH control failures, stack liner failures, and induced-draft fan problems. Several of these problem areas and the resulting system modifications were discussed previously.

Faulty pH monitoring produced many chemical problems. Difficulties with flow sampling and glass probe breakage forced unreliable manual control of pH during much of the initial operation stage; and this manual control caused such problems as scaling, plugging, and acid corrosion. Since the relocation of pH monitors in the recirculation circuit and the modification of sampling procedures, results have been excellent, with the pH

TABLE A-14. FGD SYSTEM DATA FOR BRUCE MANSFIELD 1 AND 2, SHIPPINGPORT, PENNSYLVANIA

Unit rating (gross), MW	917
(net), MW	825
Fuel	Bituminuous coal
Average fuel characteristics:	
Heating value, kJ/kg (Btu/lb)	26,700 (11,500)
Ash, %	12.9
Moisture, %	7.0
Sulfur, %	3.0
Chloride, %	
FGD process	Lime
FGD system supplier	Chemico
Application	New
Status	Operational
Startup date:	
Initial	December 1975
Commercial	June 1976
Design removal efficiency:	
Particulate, %	99.8
Sulfur dioxide, %	92.1
Actual removal efficiency:	
Particulate, %	
Sulfur dioxide, %	
Water loop	Open
Total water makeup, liters/s per MW (gal/min per MW)	
Sludge disposal	Stabilized sludge disposed of in a landfill

remaining between 6.8 and 7.2. Also, the modules have operated without any substantial deposits of hard scale (gypsum) or plugging problems, which often hurt mist eliminator performance.

Continuous SO_2 analyzers (DuPont 460 Photometric) were provided upstream and downstream of the modules, but have not operated well.

Although many problems have been resolved, difficulties with the stack liners and induced-draft fans have severely limited system availability. Stack liner failures have required Bruce Mansfield 1 and 2 to operate at half capacity for long periods. After investigating new stack liner materials, Pennsylvania Power decided to use CSL 2000 (Pullman/Kellogg). The 1B and 2B flues have been relined; and the 2A flue is being relined. It is hoped that the 1A flue, which is still lined with flake glass and showing signs of failure, will last another year.

To avoid limited availability when stock problems occur, the utility is manifolding the four flues together, so that one can be bypassed for repair without necessitating a load reduction or shutdown.

The scrubbing systems were originally designed so that five of the six scrubbing trains installed on each unit could handle total boiler gas flow at a slightly reduced particulate and SO_2 removal efficiency. Operation has shown, however, that all six trains are necessary when each unit is operating at full load. Thus, a train cannot be taken out of service without load cutbacks.

FUTURE PLANS[57,58]

Bruce Mansfield 3, a 917-MW (gross) coal-fired unit, is currently under construction alongside Bruce Mansfield 1 and 2. Commercial operation is scheduled for April 1980. The emission control system for Bruce Mansfield 3 is designed and supplied by Pullman Kellogg and is dramatically different from those on Bruce Mansfield 1 and 2. Following recent trends, ESP's will provide particulate removal upstream of a lime-based, spray-tower FGD

system. There will be dry forced-draft fans upstream of the spray towers; and high component redundancy will increase overall system reliability. Redundant components will include a spare booster fan, precipitator, and spray tower, as well as one spare stage per spray tower. The ESP's are designed to remove 95 percent of particulates; and the spray towers, to collect additional particulates simultaneously with SO_2. The low-efficiency ESP's offer substantial capital savings and permit a simpler design than high efficiency ones. Another important feature of the Bruce Mansfield 3 system design is the plan to line the 183-m (600-ft) stack with an Inconel-625 alloy. The choice of this exotic alloy stems from the nearly disastrous lining failures at Bruce Mansfield 1 and 2. Flue gas cleaning wastes from Bruce Mansfield 3 will be disposed of in the existing waste disposal system.

Table A-15 summarizes FGD system data for Bruce Mansfield 3.

TABLE A-15. SUMMARY OF EMISSION CONTROL SYSTEM AT BRUCE MANSFIELD 3[58]

Rating (gross), MW	917
Fuel	Coal
Heating value, kJ/kg (Btu/lb)	27,700 (11,900)
Sulfur content, percent	2.6 - 4.75
Ash content, percent	9.5 - 19.7
Particulate emission rate, ng/J (lb/10^6 Btu)	32 (0.075)
Sulfur dioxide emission rate, ng/J (lb/10^6 Btu)	258 (0.6)
Emission controls:	
Particulate	Electrostatic precipitators and spray towers absorbers
Sulfur dioxide	Spray tower absorbers
FGD process	Lime
FGD system supplier	Pullman Kellogg
Absorber type	Spray tower
Number of absorbers	5 (1 spare)
Number of ESP's	4 (1 spare)
Gas capacity, m^3/s (ft^3/min)	1110 (2355)
Pressure drop, kPa (in. H_2O)	7.0 (28.0)
Gas reheat:	
Type	Oil-fired
Temperature change, °C (°F)	22 (40)
Gas bypass capability	No
Startup date (commercial)	April 1980

TENNESSEE VALLEY AUTHORITY

SHAWNEE 10A AND 10B

PERFORMANCE HISTORY[59]

During September 1977, a 10-day test was conducted on the TCA system with an automatic limestone feed control that operated at stoichiometric ratios determined by the flue gas flow rate and the inlet SO_2 concentration. The system operated well.

In mid-November 1977, a 1-month test of the venturi/spray tower system's reliability was started. There was forced oxidation at two scrubber stages, and limestone slurry with a high percentage of fly ash was used. The flue gas rate to the scrubber system was varied according to the boiler load, which ranged between 100 and 155 MW. The test ended after 965 operating hours and demonstrated the reliability of the system. With the inlet SO_2 concentration varying from 2500 to 3400 ppm, the average SO_2 removal efficiency for the entire run was 86 percent.

Another 1-month reliability run on the venturi/spray tower system started in mid-December. Lime scrubbing was used in this test. Except for the higher pH at the spray tower inlet and the higher alkali utilization of a lime system, the operating conditions and test results were similar to those of the limestone reliability run.

Two tests were conducted on the TCA system. In these tests, the three beds of nitrile foam spheres were replaced by 23 layers of Ceilcote plates, which altogether were 117 cm (46 in.) deep. At the full gas flow rate of 14 m^3/g (30,000 acfm), the plates removed slightly less SO_2 than the beds of spheres, each of which was 12.7 cm (5 in.) deep and divided into four grids. However, at 8 m^3/g (18,000 acfm), the SO_2 removal efficiency of the

Ceilcote plates was a few percentage points higher than that of the foam spheres.

Forced oxidation tests were conducted on the TCA system with an air sparger. Limestone slurry with a high percentage of fly ash was used. Air sparging and limestone addition occurred sometimes in the same tank and sometimes in separate tanks. Almost total sulfite oxidization was achieved in both configurations when the stoichiometric ratio of oxygen to absorbed SO_2 was 1.8 and the pH of the oxidation tank was between 5.4 and 5.7. The depth of the slurry oxidation tank was 5 m (18 ft).

During February 1978, the effect of the slurry level in the air sparged oxidation tank was investigated. Lime slurry with a high percentage of fly ash was used. Almost complete sulfite oxidation (98 percent) was achieved when the slurry was 4 m (14 ft) and 5 m (18 ft) deep in the oxidation tank and the stoichiometric ratio of oxygen to absorbed SO_2 was 1.8. An air stoichiometric ratio of nearly 3.8 was needed to produce comparable oxidation when the slurry level dropped to 3 m (10 ft).

New tests started on March 1 on the venturi/spray tower system. To improve SO_2 removal efficiency, MgO was added to the spray tower slurry loop of the two-loop operation, with forced oxidation in the venturi loop. Limestone slurry with a high percentage of lfy ash was used. Because of the shortage of coal caused by the miners' strike, coals from different sources were burned in the boiler. As a result, inlet SO_2 concentration fluctuated at much as tenfold (from 350 to 3500 ppm). The MgO tests continued through early May 1978. With MgO addition, overall SO_2 removal was 96 percent at an inlet SO_2 concentration of 2300 ppm; without MgO addition, it was 86 percent at an inlet SO_2 concentration of 1600 ppm. The SO_2 removal by venturi alone was 30 percent with MgO addition, about the same as the case without MgO addition. The MgO tests showed that almost complete sulfite oxidation could be achieved with the stoichiometric ratio of oxygen to absorbed SO_2 was as low as 1.3.

Forced oxidation was also conducted on the limestone slurry bleed stream from the venturi/spray tower system. A single effluent hold tank was used for both venturi and spray tower. Enough MgO was added to the effluent hold tank to maintain magnesium ion (Mg++) concentration of 5000 ppm. A slurry stream was taken from the scrubber downcomer and sent to an oxidation tank into which air was sparged. About 2 liters/s (30 gal/min) of slurry was recycled from the oxidation tank to the effluent hold tank to control pH in the oxidation tank and provide gypsum seeds in the scrubber slurry. Final system bleed was withdrawn from the oxidation tank. At an average oxidation tank pH of 6, sulfite oxidation averaged 98 percent. Filter cake solids content was 85 percent, similar to that obtained when two scrubber loops were operated. However, the settling rate of slurry solids was only 0.4 cm/min (0.16 in./min), compared to approximately 0.8 cm/min (0.31 in./min) for the two-loop operation. The settling rate for unoxidated slurry containing Mg++ normally did not exceed 0.1 cm/min (0.04 in./min) when the solids content of the filter cake ranged from 50 to 60 percent.

In March 1978, the TCA system was operated with both lime and limestone slurries to which MgO was added. Flue gas with a high percentage of fly ash was scrubbed. These further tests were conducted to resolve some of the inconsistent results obtained during lime/MgO and limestone/MgO tests from April through November 1976. It was suspected that air had leaked through the scrubber downcomer in some of the earlier runs and caused the high sulfite oxidation and gypsum saturation mentioned above.

For the tests in 1976, the inlet SO_2 concentrations had usually been high (greater than 3000 ppm), whereas the inlet SO_2 concentrations for recent runs had been about 2500 ppm. At the higher inlet SO_2 concentration and SO_2 make-per-pass, the sulfite oxidation level had determined whether the slurry was unsaturated or supersaturated with gypsum. Severe scaling occurred during operation in the gypsum-saturated mode. Although recent runs have been conducted in the gypsum-saturated mode, no significant

scaling has occurred because of the lower inlet SO_2 concentration and lower SO_2 make-per-pass.

Forced oxidation of the bleed stream from the venturi/spray tower system continued through mid-June 1978. There were two test runs in which MgO was added to maintain an effective Mg++ concentration of 5000 ppm in the scrubber slurry. No stream was recycled to the effluent hold tank from the oxidation tank, in which the slurry level was ekpt at 5 m (18 ft). Sulfite oxidation averaged 96 percent or higher when the air stoichiometric ratio of oxygen to absorbed SO_2 was 1.6. The pH of the oxidation tank varied from 5.4 to 5.6, whereas that of the effluent hold tank was between 5.2 and 5.4. The solids content of the filter cake was 85 percent, and the solids settling rate was between 0.4 and 0.5 cm/min (0.16 and 0.2 in./min).

Both scrubber systems were shut down for 2 weeks beginning on June 19, 1978, because of a scheduled boiler outage, during which the flue gas duct from the 244-m (800-ft) stack was rerouted to the small stack at Shawnee 11.

In July 1978, new lime and limestone tests began. Adipic acid, an organic acid pH buffer, was added to the slurries of both scrubbers to improve SO_2 removal efficiency after some initial runs were conducted without adipic acid to establish the base cases for SO_2 removal with lime and limestone scrubbing. The venturi/spray tower system was operated with two loops, with forced oxidation in the first loop; the TCA system was operated with one loop, with no forced oxidation. Preliminary results showed that SO_2 removal efficiency was consistently between 96 and 99 percent in the venturi/spray tower system when the adipic acid concentration was approximately 1600 ppm in the venturi and 1400 ppm in the spray tower. This efficiency compared favorably with the 66 percent removal for the base case lime run without adipic acid produced an SO_2 removal efficiency of nearly 80 percent, compared to 67 percent for the base case.

The testing with adipic acid continued through August and September 1978. Both the venturi/spray tower and TCA systems

used limestone slurry with a high percentage of fly ash. The TCA system was operated without forced oxidation; the venturi/spray tower system had forced oxidation in two loops. As in the lime tests with adipic acid, significant improvement in SO_2 removal efficiency was observed. Under typical conditions, SO_2 removal higher than 90 percent could be achieved by the venturi/spray tower system when adipic acid concentration was approximately 2100 ppm in the venturi and 1500 ppm in the spray tower. Without adipic acid, the SO_2 removal efficiency was only 57 percent. Sulfite oxidation and waste sludge dewatering properties did not appear to be affected by adipic acid. In the TCA system, an adipic acid concentration between 750 and 1500 ppm yielded SO_2 removal efficiencies higher than 90 percent, compared to 71 percent for a base case run without adipic acid. In both scrubber systems, the slurry pH needs to be above 5.0, the upper pH buffer point of adipic acid, for the additive to be fully effective. Deterioration or decomposition of adipic acid apparently takes place in the scrubber. The amount of adipic acid added to the slurry was from two to three times more than the amount discharged in the sludge.

UTAH POWER AND LIGHT

HUNTINGTON 1

BACKGROUND INFORMATION[60]

The Huntington Power Station, owned and operated by Utah Power and Light, is located in Price, Utah. This station operates two boilers with a combined electric generating capacity of 810 MW (net).

Huntington 1 is a pulverized-coal-fired boiler manufactured by Combustion Engineering and placed in service early in 1978. This unit is nominally rated at 405 MW, with a gross rating of 430 MW. The coal burned has an average sulfur content of 0.5 percent and ash content of 10.0 percent.

POLLUTION CONTROL[61]

The FGD system for Huntington was supplied by Chemico and consists of four parallel spray towers utilizing a lime slurry for SO_2 removal. Each module was designed for a gas flow of 833 m^3/s (1,742,000 acfm) at 130°C (266°F) and has an L/G ratio of 6 liter/m^3 (43 gal/10^3 ft^3). The spray towers are constructed of carbon steel lined with polyester flaked glass. Primary particulate control is provided by a cold-side ESP manufactured by Buell/Envirotech. During operation a damper is used to bypass from 10 to 20 percent of the flue gas. This bypass flue gas is then used in conjunction with an inline steam reheat system to increase the temperature of the existing flue gas between 25°C and 28°C (45°F and 50°F). A horizontal chevron-type mist eliminator constructed of polypropylene is downstream of each module. From the mist eliminators the scrubbed gases are ducted to a common 183-m (600-ft) acid-brick-lined stack.

The spent absorbent from each module is pumped to a flat bottom thickener that is 18 m (60 ft) in diameter and constructed of carbon steel with a flaked-glass lining. The underflow has a solids content between 25 and 30 percent and is pumped to a vacuum filter, where it is dewatered to approximately 60 percent solids. This product is mixed with fly ash and trucked to an onsite landfill for final disposal.

The FGD system is designed to operate in a closed water loop with thickener overflow recycled to the modules. To compensate for water losses from evaporation and entrainment, additional water is added to the system at 19 liters/s (300 gal/min).

Design information is presented in Table A-16.

PERFORMANCE HISTORY[62]

Initial FGD operation began at Huntington 1 on May 10, 1978. Since startup only minor instrumentation problems have been experienced. From June through September 1978, the FGD system logged 2224 operating hours; and the boiler, 2491 operating hours. Thus, average FGD system operability was 89 percent. Although operability began at 65 percent in June, it improved to 98 percent in July and was 100 percent for August and September.

FUTURE PLANS[63]

Utah Power and Light has awarded contracts to Chemico to supply lime FGD systems for two new 400-MW units, Emery 1 and 2. The systems will be designed with an SO_2 removal efficiency of 80 percent for low-sulfur Utah coal. Primary particulate control is to be provided by an ESP upstream of each scrubber. The sludge will be stabilized with fly ash and disposed of on the plant site. Operation is expected to begin in December 1978 at Emery 1. The scheduled startup date for Emery 2 is June 1980.

TABLE A-16. FGD SYSTEMS DATA FOR HUNTINGTON 1, PRICE, UTAH

Unit rating (gross), MW	430
(net), MW	405
Fuel	Coal
Average fuel characteristics:	
Heating value, kJ/kg (Btu/lb)	
Ash, %	10
Moisture, %	
Sulfur, %	0.5
Chloride, %	
FGD process	Lime
FGD system supplier	Chemico
Application	New
Status	Operational
Startup date:	
Initial	May 1978
Commercial	
Design removal efficiency:	
Particulate, %	99.5
Sulfur dioxide, %	80.0
Actual removal efficiency:	
Particulate, %	
Sulfur dioxide, %	
Water loop	Closed
Total water makeup,	
liters/s per net MW	0.05
(gal/min per net MW)	0.74
Sludge disposal	Stabilized sludge disposed of in an onsite landfill

APPENDIX A

REFERENCES

1. Devitt, T., et al. Flue Gas Desulfurization System Capabilities for Coal-Fired Steam Generators. EPA-600-7-78-032b. PEDCo Environmental, Cincinnati, Ohio. March 1978. pp. A22, A23.

2. Melia, M., et al. EPA Utility FGD Survey August-September 1978. Preliminary Report. Prepared for the U.S. Environmental Protection Agency under Contract 68-02-2603. PEDCo Environmental, Cincinnati, Ohio. November 1978. p. 5.

3. Ibid.

4. Hargrove, O.W., and F.B. Meserole. Phase I SO_2 Test Program Results: Scrubber 2A, Unit No. 2, Four Corners Power Plant, Fruitland, New Mexico. Prepared for the Arizona Public Service Co. Radian Corp., Austin, Texas. May 2, 1977. pp. 4-8, 32-45.

5. Op. cit. No. 1. p. 15.

6. PEDCo in-house files.

7. Laseke, B.A., Jr. EPA Utility FGD Survey: December 1977-January 1978. EPA-600-7-78-051a. PEDCo Environmental, Cincinnati, Ohio. March 1978. p. 32.

8. Op. cit. No. 2. pp. 27-29.

9. Op. cit. No. 2. pp. 7-8.

10. O'Hara, R., and R.L. Nelson. Operating Experience at the Phillips and Elrama Flue Gas Desulfurization Facility. In: Proceedings of the Second Pacific Chemical Engineering Congress (PAChEC '77). American Institute of Chemical Engineers, New York, New York. 1977. pp. 308-309.

11. Smith, M.P. (PEDCo Environmental, Inc.) Telephone Conversation with R. O'Hara (Duquesne Light Company). November 27, 1978.

12. Op. cit. No. 7. pp. 36-37.

13. Op. cit. No. 2. pp. 30-31.

14. Op. cit. No. 13. pp. 308-309.

15. Op. cit. No. 7. p. 42

16. Op. cit. No. 2. pp. 32-33.

17. Isaacs, G.A., and F.K. Zado. Survey of Flue Gas Desulfurization Systems: Hawthorn Station, Kansas City Power and Light Co. EPA-650-2-75-047h. PEDCo Environmental, Inc., Cincinnati, Ohio. September 1975. p. 2-1.

18. Op. cit. No. 17. pp. 2-1, 2-2.

19. Op. cit. No. 7. p. 10.

20. Ibid. pp. 45-54.

21. Op. cit. No. 2. p. 9-2.

22. Beard, J.B. Scrubber Experience at the Kentucky Utilities Company Green River Power Station. In: Proceedings of the Symposium on Flue Gas Desulfurization, Hollywood, Florida, November 1977, (Volume 1). EPA-600-78-058a. March 1978. pp. 248-249.

23. Laseke, B.A., et. Survey of Flue Gas Desulfurization Systems: Green River Station, Kentucky Utilities. EPA-600-7-78-048e. PEDCo Environmental, Inc., Cincinnati, Ohio. March 1978. p. 24.

24. Op. cit. No. 7. pp. 71-72.

25. Op. cit. No. 2. pp. 42-43.

26. Campbell, R.L. Emission Testing Report, Kentucky Utilities Green River Station, Central City, Kentucky. PEDCo Environmental, Inc., Cincinnati, Ohio. October 1978. p. 2.

27. Hartman, J.S. (PEDCo Environmental, Inc.) Internal Memo about Telephone conversation with R.P. Van Ness (Louisville Gas and Electric Company). July 15, 1977.

28. Yerino, L.V. (PEDCo Environmental, Inc.) Internal Memo about inspection of Louisville Gas and Electric Company's Cane Rune Station: Unit 4 Sulfur Dioxide Scrubber Status. April 25, 1977.

29. Laseke, B.A., Jr. (PEDCo Environmental, Inc.) Notes on trip to Louisville Gas and Electric Company's Cane Run Station. August 17, 1976.

30. Op. cit. No. 7. pp. 75-76.

31. Op. cit. No. 2. p. 44.

32. Op. cit. No. 2. p. 11.

33. Op. cit. No. 27.

34. Laseke, B.A., Jr. (PEDCo Environmental, Inc.) Notes on trip to Louisville Gas and Electric Company's Cane Run Station. March 31, 1978.

35. Op. cit. No. 2. p. 45.

36. Op. cit. No. 2. p. 11.

37. PEDCo in-house files.

38. Op. cit. No. 2. p. 11.

39. Ibid.

40. PEDCo in-house files.

41. Van Ness, R.P. Louisville Gas and Electric Company Scrubber Experiences and Plans. In: Proceedings of the Symposium on Flue Gas Desulfurization, Hollywood, Florida, November 1977 (Volume 1). EPA-600/7-78-058a. March 1978. pp. 235-245.

42. Op. cit. No. 2. p. 46.

43. Ibid. p. 11.

44. Corbett, W.E., and O.W. Hargrove, Jr. Results of EPA Sponsored Characterization Tests of Louisville Gas and Electric Company's Paddy's Run Flue Gas Desulfurization System. In: Proceedings of the Second Pacific Chemical Engineering Congress (PAChE 1977). American Institute of Chemical Engineers, New York, New York. 1977. pp. 336-337.

45. Op. cit. No. 41.

46. Op. cit. No. 7. p. 80.

47. Op. cit. No. 2. p. 47.

48. Op. cit. No. 7. p. 82.

49. Ibid.

50. Ibid. p. 83.

51. Ibid. p. 48.

52. Berube, D.T., and C.D. Grumm. Status and Performance of the Montana Power Company's Flue Gas Desulfurization System. In: Proceedings of the Symposium on Flue Gas Desulfurization, Hollywood, Florida, November 1977 (Volume 1). EPA-600-7-058a. March 1978. pp. 277-291.

53. Ibid. p. 290.

54. Op. cit. No. 7. p. 121.

55. Laseke, B.A., Jr. Survey of Flue Gas Desulfurization Systems: Bruce Mansfield Station, Pennsylvania Power Company. Preliminary Report. Prepared for the U.S. Environmental Protection Agency under Contract 68-02-2603. PEDCo Environmental, Inc., Cincinnati, Ohio. November 1978. pp. 50-55.

56. Laseke, B.A., Jr. (PEDCo Environmental, Inc.) Telephone conversation with R. Forsythe (Pennsylvania Power Company). December 1, 1978.

57. Op. cit. No. 55. p. 55.

58. Ibid. p. 56.

59 PEDCo in-house files.

60. Ibid.

61. Ibid.

62. Op. cit. No. 2. p. 82.

63. Ibid. p. 21.

APPENDIX B

DOMESTIC LIMESTONE SLURRY

FGD SCRUBBING SYSTEMS

This appendix summarizes information on limestone slurry FGD scrubbing systems presented in Section 2.2 and describes the other systems in this country that use limestone or limestone with alkaline fly ash.

The following FGD systems are described:

- Alabama Electric Cooperative - Tombigbee 2
- Arizona Electric Power Cooperative - Apache 2
- Arizona Public Service - Cholla 1 and 2
- Central Illinois Light Company - Duck Creek 1
- Gulf Power Company - Sholz 1 and 2
- Indianapolis Power and Light Company - Petersburg 3
- Kansas City Power and Light - La Cygne 1
- Kansas Power and Light Company - Jeffrey 1
- Kansas Power and Light Company - Lawrence 4 and 5
- Northern States Power Company - Sherburne 1 and 2
- South Carolina Public Service Authority - Winyah 2
- Southern Mississippi Electric - R.D. Morrow 1
- Springfield City Utilities - Southwest 1
- Tennessee Valley Authority - Widows Creek 8
- Texas Utilities - Martin Lake 1 and 2
- Texas Utilities - Monticello 3

The EPA test facility at Shawnee uses both lime and limestone. It is described in Appendix A.

ALABAMA ELECTRIC COOPERATIVE

TOMBIGBEE 2

BACKGROUND INFORMATION[1,2]

Tombigbee Power Station of Alabama Electric Cooperative is a three-unit station near Leroy, Alabama. Tombigbee 1 is an existing 240-MW unit, and Tombigbee 2 and 3 are identical 255-MW, (gross) units. Tombigbee 3 is under construction.

The electric power generating facilities at Tombigbee 2 consist of a Riley Stoker pulverized-coal-fired steam generator with a 225-MW (net) turbine generator. Tombigbee 2 began initial operation in September 1978.

The coal burned at Tombigbee 2 is a bituminous low-to-medium-sulfur (from 0.8 percent to 1.5 percent sulfur) coal, its heating value ranges from 25,600 to 27,900 kJ/kg (11,000 to 12,000 Btu/ lb); and its ash content, from 10 to 16 percent.

POLLUTION CONTROL

A Research Cottrell electrostatic precipitator (ESP), designed to be 99.3 percent efficient, provides primary particulate control for Tombigbee 2. Sulfur dioxide (SO_2) is controlled with a limestone slurry FGD system supplied by Peabody Process Systems. The FGD system consists of two parallel spray tower absorbers that scrub 70 percent of the boiler flue gas with a guaranteed SO_2 removal efficiency of 85 percent. The design also includes a single-stage chevron mist eliminator system and a flue gas bypass reheat system that allows 30 percent of the hot flue gas to bypass the spray towers and rejoin the cleaned saturated gas in a single duct to the stack. The overall SO_2 removal efficiency at Tombigbee 2 is designed to be 59.5 percent.

Spent scrubbing slurry containing 8 percent solids is piped to a clay-lined pond at a rate of 38 liters/s (600 gal/min).

Table B-1 summarizes the FGD data for Tombigbee 2.

PROCESS DESCRIPTION[3]

Flue gas exits the boiler economizer at 396°C (745°F) and enters a four-field hot ESP with an efficiency of 99.3 percent. The cleaned gas enters the boiler air preheater at 385°C (725°F) through two parallel ducts from the ESP. Each gas stream is drawn through an induced-draft fan that forces the gas into a common header feeding the SO_2 absorber towers and the bypass duct at 144°C (291°F). Of the 450 m^3/s (953,000 acfm) of gas entering the header, 30 percent bypasses the absorbers; and 35 percent passes through each tower.

Approximately 157 m^3/s (334,000 acfm) of gas is fed into the base of each spray tower. The flue gas turns 90 degrees and rises through trays as limestone slurry is sprayed down, countercurrent to the gas flow. The cleaned, saturated gas passes through a horizontal, single-stage chevron mist eliminator into a common duct to the stack at 255 m^3/s (540,000 acfm) and 54°C (130°F). The scrubbed gas joins the bypassed gas and the combined stream enters the 120-m (400-ft) stack at approximately 387 m^3/s (820,000 acfm) and 81°C (178°F).

PERFORMANCE HISTORY

Tombigbee 2 started FGD operations in September 1978. As of October 1978, the unit was performing shakedown and debugging operations. Because of the unit's recent startup, typical performance information is not available.

FUTURE PLANS[4]

Alabama Electric Cooperative is installing an identical unit, Tombigbee 3, scheduled to commence operation in June 1979. Like Tombigbee 2, Tombigbee 3 will include a limestone slurry FGD

TABLE B-1. FGD SYSTEM DATA FOR TOMBIGBEE 2

Location	Leroy, Alabama
Rating (net), MW	255
Fuel	Bituminous coal
Heating value, kJ/kg (Btu/lb)	25,600-27,900 (11,000-12,000)
Ash, percent	10-16
Moisture, percent	16
Sulfur, percent	0.8-1.5
FGD process	Limestone
FGD system supplier	Peabody Process Systems
Application	New
Startup date (initial)	September 1978
Design removal efficiency	
Particulate (ESP), percent	99.3
Sulfur dioxide, percent	
Absorbers	85
Overall	59.5
Water loop	Open
Total water makeup, Liter/s per net MW (gal/min per net MW)	0.08 (1.19)
Sludge disposal	Unstablized sludge is disposed of in an onsite, clay-lined pond

system supplied by Peabody Process Systems and designed to scrub 70 percent of the flue gas. The boiler construction is currently 50 percent complete.

ARIZONA ELECTRIC POWER COOPERATIVE

APACHE 2

BACKGROUND INFORMATION[5]

Apache Power Station of Arizona Electric Power Cooperative is a three-unit station in Cochise, Arizona. Apache 1 is an existing 100-MW (gross) unit, and Apache 2 and 3 are identical 245-MW (gross) units. Apache 3 is under construction.

The electric power generating facilities at Apache 2 consist of a Riley Stoker dry bottom pulverized-coal-fired steam generator with a 200-MW (net) turbine generator. Apache 2 began operation in September 1978.

The coal burned at Apache 2 is a bituminous, low-sulfur (from 0.5 percent to 0.8 percent sulfur) coal. Its heating value ranges from 23,300 to 25,600 kJ/kg (10,000 to 11,000 Btu/lb), and its ash content is 10 percent.

POLLUTION CONTROL

An ESP designed to be 99.56 percent efficient and supplied by the Air Correction Division of Universal Oil Products provides primary particulate control for Apache 2. Emissions of SO_2 are controlled with a Research Cottrell limestone slurry FGD system, which consists of two parallel packed-tower absorbers. Each tower contains a layer of packing approximately 1.2 m (4 ft) thick. Apache 2 scrubs 100 percent of the flue gas with an SO_2 removal efficiency of 85 percent to meet the State emission regulation of 344 ng/J (0.8 lb/10^6 Btu).

Spent scrubbing slurry is pumped to an unlined pond. Another unlined pond is used for disposal of bottom and fly ash. The life expectancy of each pond is 30 years.

Table B-2 summarizes the FGD data for Apache 2.[6]

TABLE B-2. FGD SYSTEM DATA FOR APACHE 2

Location	Cochise, Arizona
Rating (gross), MW (net), MW	245 200
Fuel Heating value, kJ/kg (Btu/lb) Ash, percent Sulfur, percent	Bituminous coal 23,300-25,600 (10,000-11,000) 10 0.5-0.8
FGD process	Limestone
FGD system supplier	Research Cottrell
Application	New
Startup date (initial) (commercial)	August 1978 November 1978
Design removal efficiency Particulate (ESP), percent Sulfur dioxide, percent Absorbers Overall	 99.4-99.6 85 85
Water loop	Open
Total water makeup, liter/s per net MW (gal/min per net MW)	0.852 (13.5)
Sludge disposal	Unstabilized sludge is disposed of in an unlined pond

PROCESS DESCRIPTION[6]

After the flue gas exits the boiler, it passes into an ESP with an efficiency of 99.56 percent and enters the preheater system for boiler air. The flue gas is fed into the base of two parallel absorbers designed to handle 190 m^3/s (400,000 acfm) of flue gas at 132°C (270°F). The gas rises through a spray zone in the tower and a 1.2-m (4-ft) layer of packing. Mist elimination is provided by two stages of horizontal mist eliminators situated above the packing layer in each tower. After cleaning, the saturated flue gas enters the 122-m (400-ft) lined stack.

PERFORMANCE HISTORY

Apache 2 began FGD operation in August 1978, and commercial operation commenced in November 1978. As of October 1978, the unit was performing shakedown and debugging operations. Because of the unit's recent startup, performance information is not available.

FUTURE PLANS[7]

Arizona Electric Power Cooperative will install an identical unit, Apache 3, scheduled to begin operation in April 1979. Apache 3 will include a limestone slurry FGD system supplied by Research Cottrell that will scrub 100 percent of the flue gas with an SO_2 removal efficiency of 85 percent.

ARIZONA PUBLIC SERVICE

CHOLLA 1 AND 2

BACKGROUND INFORMATION[8]

The Cholla Steam Electric Station of Arizona Public Service is in an arid desert region of Navajo County, near Joseph City Arizona.

Only two of the five planned steam turbine generating units at Cholla are in operation.

Both Cholla 1 and 2 have wet bottom pulverized-coal-fired steam generators supplied by Combustion Engineering. Cholla 1 is a 115-MW (net) unit and started commercial service in May 1962. Cholla 2 is a 250-MW unit that began operation in June 1978, but had not been declared commercial as of October 1978.

Arizona Public Service is increasing the station's capacity from the current 365 MW (net) to 1315 MW (net). Cholla 3 and 4, now under construction, are scheduled for commercial startup in June 1979 and June 1980 and are rated at 250 and 350 MW (net), respectively. Now in the planning stage, Cholla 5 is scheduled for commercial startup in June 1983. Like Cholla 1 and 2, Cholla 3,4, and 5 will consist of CE puliverized-coal-fired units.

The plant burns low-sulfur, subbituminous coal that is shipped by rail from the McKinley mine near Gallup, New Mexico. This coal has a typical heating value of 24,190 kJ/kg (10,400 Btu/lb), sulfur content of 0.5 percent, chloride content of 0.025 percent, ash content of 13.5 percent, and moisture content of 15 percent.

Cholla 1 is equipped with Research Cottrell multicyclones upstream from the FGD system that are designed to remove 80

percent of the inlet particulate matter. It also has a retrofitted Research Cottrell, FGD system that began operation in October 1973.

Current emission regulations require that three of the other four units at Cholla be equipped with FGD systems. Arizona Public Service has awarded contracts to Research Cottrell for limestone slurry FGD systems on Units 2 and 4. Unit 3 will include only an ESP for the control of particulate emissions, and the emission control strategy for Unit 5 has not yet been determined.

Cholla 2 consists of four modules to control particulate and SO_2. The FGD system can handle 100 percent of the flue gas and commenced operation simultaneously with the boiler in June 1978. Cholla 3, an identical 250-MW (net) unit, is scheduled to go on line in June 1980.

POLLUTION CONTROL[9,10]

Cholla 1 is equipped with Research Cottrell multicyclones and an FGD system consisting of two modules, A and B. Each module includes a flooded-disc venturi scrubber, a cyclonic mist eliminator, an absorber tower, and a final mist eliminator. The absorber on Module A includes packing to remove SO_2 with circulating limestone slurry. The absorber tower in Module B is a hollow spray tower, and limestone slurry is not circulated through it. Hence, any SO_2 removal in Module B occurs in the venturi only. Each module treats approximately 50 percent of the total boiler flue gas. The entire FGD system is designed to treat 227 m^3/s (480,000 acfm) of flue gas at 136°C (276°F). Actual boiler flue gas flow to both modules (at 115-MW generating capacity) measures approximately 189 m^3/s (400,000 acfm). In addition, bypass leakage around the FGD system amounts to 8 m^3/sec (17,000 acfm).

The SO_2 absorber in Module A includes a fixed plate and conical hat separator and packing. The packing, which consists of a fixed matrix of rigid sheets of polypropylene, has a high

specific surface area and pressure drop of only 0.12 kPa (0.5 in. H_2O). The superficial gas velocity of the SO_2 absorber is 2.1 m/s (6.9 ft/s), and the liquid-to-gas (L/G) ratio is 6.5 liters/m^3 (48.9 gal/1000 ft^3).

The mist eliminators in each absorber tower are arranged horizontally in two stages. The first stage is a chevron-type, two-pass, polypropylene mist eliminator, located approximately 3.7 to 4.6 m (12 to 15 ft) above the absorber packing. The design configuration of the second-stage, four-pass, polypropylene mist eliminator differs only slightly from that of the first stage.

A set of shell-and-tube heat exchangers in each module raises the temperature of the scrubbed gas from 50°C (122°F) to 72°C (162°F) before it is discharged to the atmosphere. The reheated, scrubbed gases are discharged through carbon steel ducts to the main stack.

Cholla 2 controls particulate and SO_2 emissions with a four-module limestone slurry FGD system also supplied by Research Cottrell. This new unit is designed to remove 99.7 percent of particulates and 75 percent of SO_2. The four scrubbing trains are arranged in parallel. Every train consists of a packed-tower absorber preceded by a flooded-disc scrubber that handles 25 percent of the flue gas (100 percent of the flue gas is scrubbed). Each train, however, can scrub up to 33 percent of the total flue gas, so that the unit is capable of operating at full load with only three trains. At full load, each train can treat 185 m^3/s (392,000 acfm) of flue gas at 50°C (122°F). Cholla 2 includes an inline steam coil reheat system that increases flue gas temperature by 22°C (40°F). Spent scrubbing slurry from this open loop FGD system is disposed in an onsite, unlined pond.

Tables B-3 and B-4 summarize the FGD data for Cholla 1 and 2, respectively.

TABLE B-3. FGD SYSTEM DATA FOR CHOLLA 1

Location	Joseph City, Arizona
Rating (gross), MW	119
(net), MW	115
Fuel	Subbituminous coal
Heating value, kJ/kg (Btu/lb)	23,609 (10,150)
Ash, percent	13.5
Moisture, percent	15.0
Sulfur, percent	0.5
Chloride, percent	0.025
FGD process	Limestone
FGD system supplier	Research Cottrell
Application	Retrofit
Startup date (initial)	October 1973
(commercial)	December 1973
Design removal efficiency	
Particulate, percent	99.7
Sulfur dioxide, percent[a]	58.5
Actual removal efficiency	
Particulate, percent	99.7
Sulfur dioxide, percent[a]	50-60
Water loop	Open
Total water makeup, liter/s per net MW (gal/min per net MW)	0.066 (1.04)
Sludge disposal	Unstabilized sludge is disposed of in an onsite, unlined pond

[a] These are total system removal values. The A-side module, which contains the sulfur dioxide absorber, removes 92 percent.

TABLE B-4. FGD SYSTEM DATA FOR CHOLLA 2

Location	Joseph City, Arizona
Rating (gross), MW	250
Fuel	Subbituminous coal
Heating value, kJ/kg (Btu/lb)	23,609 (10,150)
Ash, percent	13.5
Moisture, percent	15.0
Sulfur, percent	0.5
Chloride, percent	0.025
FGD process	Limestone
FGD system supplier	Research Cottrell
Application	New
Startup date (initial)	June 1978
Design removal efficiency	
Particulate, percent	99.7
Sulfur dioxide, percent[a]	75.0
Water loop	Open
Total water makeup, liter/s per net MW (gal/min per net MW)	0.066 (1.04)
Sludge disposal	Unstabilized sludge is disposed of in an onsite, unlined pond

[a] Because the utility has no scrubber bypass, this represents the overall removal efficiency.

PROCESS DESCRIPTION

Flue gas from the Cholla 1 boiler induced-draft fans is pressurized by two booster fans and then flows downward through the throat of the venturi-type, flooded-disc particulate scrubber. Limestone slurry flows out over the disc and is atomized as it is sheared by the gas stream at the edge of the disc. Slurry is also injected tangentially through nozzles on the inside wall of the venturi scrubber shell above the tapered throat. The saturated, scrubbed flue gas then passes through a cyclonic mist eliminator, where solids from collected fly ash, limestone slurry, and reaction products are separated from the gas stream before it enters the absorber.

Gas from the cyclonic mist eliminator enters the absorber tower near the base. In Module A only, it contacts the limestone slurry on the surface of the wetted-film packing, which is 0.6 m (2 ft) thick.

The scrubbed gas passes through a set of mist eliminators (one set per absorber) and is reheated before it is discharged to the atmosphere through the main stack. The mist eliminators are slat (special baffle design) impingement type, constructed of polypropylene and arranged horizontally (vertical gas flow) in two stages. Reheat is provided by a set of steam-heated, shell-and-tube heat exchangers (one set per module).

Limestone is added to Module A of the FGD system at a rate of approximately 110 percent of the stoichiometric requirement for reaction with the SO_2 in the flue gas. Part of the circulated liquor in the SO_2 absorber is diverted to the flooded-disc scrubber tank (common to both modules) to maintain the pH between 4 and 5 in the particulate control system. The liquid level in this tank is maintained by pumping the excess spent liquor to one of two surge tanks (sludge holdup tanks) before it is discharged to a pond. The plant site has no facilities for sludge storage or fixation. Because of the area's light rainfall and a high evaporation rate, wastewater discharge into receiving waters is not a problem. Therefore no liquor is recirculated back to the process.

Dampers in the FGD system are arranged so that either Module B alone or Modules A and B together can be bypassed for a long period. Module A alone can only be bypassed for a short time because limestone, which is used to control the operating pH of the entire particulate scrubber system, enters the system in the Module A absorber tower tank.

PERFORMANCE HISTORY[11]

Since September 1977, no major design modifications have been necessary at Cholla 1. The period from October 1977 through September 1978 is characterized by routine overhauls and general maintenance. The main problems during this period have been the failure of a recycle pump expansion joint, leaks in the flooded-disc scrubber tank header, and leaks in the venturi section. A-side and B-side reliabilities have averaged 96 percent and 95 percent, respectively.*

Cholla 2 began operation in June 1978, and all four scrubbing trains are in service. Cholla 2 has experienced reasonant vibrations in the slurry piping since the unit became operational. To reduce the vibrations, Research Cottrell has been injecting nitrogen into the slurry lines; but no permanent solution to the problem has yet been found. In addition to the vibration problem, some peeling of the corrosion-resistant lining has occurred in the downcomer area of one absorber module.

FUTURE PLANS[12,13]

Arizona Public Service plans to install an FGD system on Cholla 4 and 5. Cholla 3 will include an ESP for particulate control only. Cholla 4 will utilize a single module FGD system for partial scrubbing, and Cholla 5 may be required to use a scrubbing system to remove 98 percent of the SO_2 from the flue

---

* Reliability values are provided because this is the only index reported by the utility for this system.

gas. Cholla 4 and 5 are scheduled to begin operations in June 1980 and 1983, respectively.

Arizona Public Service will also control SO_2 emissions to a greater degree at its Four Corners Station, where the operational particulate scrubbers at Units 1, 2, and 3 are being upgraded for additional SO_2 removal. The particulate scrubbers at these units currently remove approximately 30 percent of the SO_2 emitted from the boilers. The Four Corners Station, which consists of five units, is required to achieve a total SO_2 removal efficiency of 67.5 percent. The control strategy has not yet been finalized for Four Corners 4 and 5. Four Corners 1, 2, and 3 should begin upgraded FGD operations sometime in 1979. Four Corners 4 and 5 will not begin operations until 1982 at the earliest.

CENTRAL ILLINOIS LIGHT COMPANY

DUCK CREEK 1

BACKGROUND INFORMATION

The Duck Creek Plant is a new coal-fired power generating station owned and operated by the Central Illinois Light Company. The plant is situated in an unreclaimed strip-mine area near Carrton, Illinois. The current capacity of the plant is 416 MW (gross), which is provided by one unit placed in commercial service on June 1, 1976.

Duck Creek 1 is designed to fire bituminous, high-sulfur (3.3 percent sulfur), Illinois coal with an average ash content of 18 percent. When the FGD system is not used, low-sulfur Colorado coal is burned.

Three more units of identical capacity are planned for installation at the station. Duck Creek 2, 3, and 4 are scheduled for commercial operation in 1982, 1989, and 1992, respectively and this will bring total station capacity to 1664 MW (gross).

POLLUTION CONTROL

Primary particulate control is provided by two parallel ESP's designed to remove 99.8 percent of particulates. Primary SO_2 control is provided by a limestone slurry FGD system consisting of four parallel modules, each supplying 25 percent of capacity. Overall (design) SO_2 removal efficiency is 85.3 percent when burning 4 percent sulfur coal. The modules are vertical, rod-deck, venturi-sorber scrubbers. Each module can accommodate 167 m^3/s (353,900 acfm). All or part of the flue gas can

be bypassed around the scrubber modules during outages or emergencies by manipulating bypass dampers and module isolation dampers.

Table B-5 summarizes the FGD data for Duck Creek 1.

PROCESS DESCRIPTION

Leaving the boiler at 1,140 m^3/s (2,415,000 acfm) and 446°C (835°F), flue gas passes through half-size air preheaters and into two parallel ESP's supplied by Pollution Control-Walther Co. The ESP's are designed to remove 99.8 percent of particulates when the inlet gas loading is 14.5 mg/m^3 (6.34 gr/scf). The discharge gas from the ESP's enters a manifold with four induced-draft fans that overcome draft loss in the boiler, the ESP's, and the FGD system. These fans are connected in parallel to a common duct that distributes the gas to each module in the FGD system or to the bypass duct.

At the base of each scrubber module, flue gas is quenched to adiabatic saturation conditions. The quenched gas flows upward through nine stages of rod decks where contact is made with the scrubbing slurry in a countercurrent fashion. The scrubbing slurry is sprayed from the top of each module and flows downward through the rod decks. By providing for intimate contact between the gas and slurry, the rod decks enhance transfer of SO_2 into the liquid phase and thus promote SO_2 removal.

The cleaned, saturated gas stream in each module exits the spray zone, turns 90 degrees, and passes through a horizontal mist elimination section. Entrained droplets of moisture and slurry are removed from the gas stream by passage through two stages of chevron-type, slanted-vertical mist eliminators located in the horizontal discharge duct of each module.

Scrubbed, saturated gas exits the FGD system and enters the stack through the breeching section without reheat. The "wet stack" is a 150-m (500-ft) chimney that contains a Cor-Ten steel flue lined with flake glass. Four bottom hoppers are included in

TABLE B-5. FGD SYSTEM DATA FOR DUCK CREEK 1

Location	Canton, Illinois
Rating (gross), MW	416
(net), MW	400
Fuel[a]	Bituminous coal
Heating value, kJ/kg (Btu/lb)	24,523 (10,543)
Ash, percent	9.12
Moisture, percent	18.0
Sulfur, percent	3.30
Chloride, percent	0.03
FGD process	Limestone
FGD system supplier	Riley Stoker/Environeering
Application	New
Startup date (initial)[b]	July 1976
(Commercial)	August 1978
Design removal efficiency	
Particulate (ESP), percent	99.8
Sulfur dioxide, percent	85.3
Water loop	Open
Total water makeup, liter/s per net MW (gal/min per net MW)	0.094 (1.49)
Sludge disposal	Unstabilized sludge is disposed in an onsite, lined pond

[a] Design fuel specifications for high-sulfur Illinois coal.

[b] Boiler and ESP began commercial operation in June 1976. One FGD module commenced operation in July 1976, and full commercial operation of all four FGD modules commenced in August 1978.

the stack for collection of moisture and slurry droplets that fall out of the flue gas because of a difference in the velocity of the droplets and velocity of the gas.

Spent scrubbing slurry is bled from the scrubber recirculation lines. The solids content of this slurry is 15 percent and includes reaction products, unreacted limestone, and fly ash. The spent slurry is transferred to a waste collection tank where it is combined with liquid waste streams from plant sumps and then discharged to an onsite pond for final disposal.

PERFORMANCE HISTORY[14-16]

Duck Creek 1 commenced commercial operation on June 1, 1976. The D-scrubber module was initially placed in the flue gas path on July 1, 1976. Operation during July and August was limited because of such construction deficiencies as bad welds, faulty pipe hangers, and leaks in the scrubber system. To resolve these problems, the D scrubber was taken out of the gas path; it was placed back on September 9th and operated noncontinuously for approximately 360 hours in September and 385 hours in November. From September through November, a number of major operating problems were encountered, especially with massive scaling of the mist eliminators, plugging of the spray nozzles and pipes, and failure of materials. The module remained out of service in December, January, and February because of a scheduled 6-month overhaul of the boiler and turbine. During this outage, a number of modifications were made to the scrubber to correct the operating problems encountered. The unit was placed back in service in mid-March 1977, and the D scrubber operated almost continuously for 350 hours during the balance of the month. Testing of the automatic control loops, during April and May, was prematurely terminated because of installation difficulties that caused the D scrubber to be taken out of service. Duck Creek 1 remained in service with the boiler firing low-sulfur Colorado coal and the ESP's removing particulates with the aid of sulfur trioxide gas injection. The D scrubber, along with the other scrubber

modules, was placed back in the flue gas path on July 23, 1978.

Since July 1978, the system has operated intermittently. Modifications were made to the slurry transfer tank after it was found to be underdesigned. Because a common unloading and transfer system is used for coal and limestone, coal fines have been present in the limestone slurry and produced plugging problems in the FGD system. From August through September 1978, the average availability of the FGD system was only 46 percent.

Because the FGD system has only recently begun commercial operation, SO_2 removal efficiencies for full-scale operations are not available. However, SO_2 removal efficiency was measured for the D-scrubber module during the interim test. The test indicates that the module's removal efficiency was 91.6 percent, well above the design maximum guarantee of 85.3 percent when coal containing 4 percent sulfur is fired. This measurement was taken for SO_2 inlet concentrations of 3000 ppm.

Measurements of particulate removal efficiency during the test of the D scrubber suggest that the scrubber was removing as much as 70 percent of the inlet particulate matter that passed through the upstream ESP's. Although the FGD system is guaranteed not to add any particulates to the gas stream discharged from the outlet of the EPS's, the scrubbers are also not designed to provide any additional particulate removal capability to the emission control system. The utility and system supplier indicate that the additional particulate removal may be attributed to the ionization or agglomeration of particulates during passage through the upstream ESP's. As a consequence, collection of these particles in the downstream scrubber is greatly enhanced.

FUTURE PLANS[18,19]

The utility is currently evaluating bids for the construction of a second 400-MW (nominal) unit to begin operation in 1982. Duck Creek 2 will use ESP's for particulate control and a limestone slurry or double alkali process for SO_2 control.

GULF POWER COMPANY

SCHOLZ 1 AND 2

BACKGROUND INFORMATION[20]

The Scholz steam power plant of Gulf Power Company is a two-unit station in Chattahoochee, Florida. Scholz 1 and 2 are 47.5-MW (gross) units, each of which can produce 40 MW (net) at maximum capacity.

The electric power generating facilities at the Scholz steam power plant consist of two pulverized-coal-fired steam generators supplied by Babcock & Wilcox with associated turbine generators. Scholz 1 and 2 were placed in service in 1953.

The coal burned at this station generally is high-sulfur (2.5 percent sulfur) coal having a heating value of 29,000 kJ/kg (12,400 Btu/lb) and an ash content of 14 percent. A variety of coals, however, are burned during prototype testing; and sulfur content is as high as 5 percent at times.

POLLUTION CONTROL[21]

An ESP designed to be (97.7 percent efficient) supplied by Buell (now Buell-Environmental) provides primary particulate control for the Scholz installation. The SO_2 is controlled with a prototype limestone slurry FGD system supplied by Chiyoda International. The Scholz units have tried a number of experimental FGD processes. The current Thoroughbed 121 system is an upgraded model using components from a Thoroughbred 101 prototype also supplied by Chiyoda International.

The FGD system consists of a jet bubbler tank that scrubs 28.8 percent of the flue gas. The system design includes a

double-pass chevron mist eliminator. No reheat is provided. Gas exits the FGD system and passes through a test stack.

Scrubbing waste, in the form of a relatively stable gypsum, is bled from the bottom of the jet bubbler tank. The gypsum, with a solids content between 10 and 25 percent, is pumped to a gypsum pond where the solids settle out. The supernatant is pumped back to the process.

FGD data are summarized in Table B-6.

PROCESS DESCRIPTION[22,23]

The Thoroughbred 121 prototype system is designed to accommodate flue gas from a coal-fired steam generator having an equivalent electrical capacity of 23 MW. Portions of flue gas from Scholz 1 and 2 pass through a header into the FGD system. The flue gas flows through a port slightly above the center of the jet bubbler into a ring-like chamber around the tank's circumference. It then travels downward through a shallow slurry layer in pipe-like vertical ducts (vertical sparges) in the jet bubbler zone. The open ends of the vertical sparges are submerged 10 to 41 cm (4 to 16 in.) below the slurry surface. The flue gas contacts the slurry in the froth created by the high-velocity flue gas as it comes from the sparges. Oxidizing air introduced into the tank through a horizontal duct near the tank base promotes gypsum crystal growth from the spent reagent in the tank. Gypsum settles to the bottom of the tank and is drawn off in a continual bleed stream. The cleaned, saturated gas rises above the slurry froth around the ring of vertical sparges and exists through a center duct near the top of the tank. After passing through the mist eliminator system, the flue gas is ducted without reheat to a 23-m (76-ft) stack used for the scrubbing system only.

PERFORMANCE HISTORY[24,25]

The Thoroughbred 121 prototype began operation at the Scholz station on August 30, 1978. An availability of greater than 99

TABLE B-6. FGD SYSTEM DATA FOR SCHOLZ 1 AND 2[a]

Location	Chattahoochee, Florida
Rating (gross), MW	40 (each)
Fuel	Coal
Heating value, kJ/kg (Btu/lb)	29,000 (12,400)
Ash, percent	14
Sulfur, percent	2.5 (5% maximum)
Chloride, percent	0.15
FGD process	Limestone
FGD system supplier	Chiyoda International
Application	Retrofit
Startup date (initial)	August 1978
Design removal efficiency	
Particulate (ESP), percent	99.7
Sulfur dioxide, percent	-
Water loop	Open
Sludge disposal	FGD waste in the form of gypsum is stacked in the existing onsite pond

[a] Flue gas from both units passes through a header into this prototype FGD system. Only 28.75 percent of the flue gas generated by this 80-MW (gross) station is treated.

percent has been reported since then. As of October 1978, no operating problems had been reported.

INDIANAPOLIS POWER AND LIGHT COMPANY

PETERSBURG 3

BACKGROUND INFORMATION[26]

The Petersburg Power Station, owned and operated by the Indianapolis Power and Light Company, is located near Petersburg, Indiana, approximately 160 km (100 miles) southwest of Indianapolis. The station consists of three coal-fired, steam-turbine generating units, which have a combined capacity of 1180 MW. Petersburg 1 is rated at 220 MW; Petersburg 2, at 430 MW; and Petersburg 3, at 530 MW. The utility is planning the installation of another 530-MW unit, which is scheduled to be in service by April 1982. Petersburg 4 will bring the station's combined power generating capacity to 1710 MW. Of the three operational units, only Petersburg 3 is required to meet the current Federal New Source Performance Standards for SO_2 emissions of 516 ng/J (1.2 lb/10^6 Btu). This unit is fitted with an FGD system.

The Petersburg 3 boiler is a Combustion Engineering unit designed to fire bituminous high-sulfur (4.5 percent sulfur) Indiana coal with a heating value of 25,000 kJ/kg (10,750 Btu/lb), ash content from 8 to 15 percent, and moisture content from 10 to 16 percent.

POLLUTION CONTROL[27]

The emission control system on Petersburg 3 consists of two ESP's designed by Research Cottrell to be 99.3 percent efficient and a limestone slurry FGD system supplied by the Air Correction Division of Universal Oil Products. The FGD system consists of four parallel modules that scrub 100 percent of the flue gas. In

each module, there are three beds of turbulent contact absorbers (TCA's). The SO_2 removal efficiency for the system is designed to be 85 percent. The system includes two stages of chevron-type mist eliminators in each module and an indirect hot-air steam-coil reheat system that raises the temperature of the cleaned, saturated gas 17°C (30°F).

Spent scrubbing slurry from the system is thickened and stabilized in a fixation facility supplied by International Utility Conversion Systems before disposal in an onsite unlined pond. A ball mill with a capacity of 38 Mg/h (42 tons/h) provides onsite limestone preparation.

Table B-7 summarizes the FGD data for Petersburg 3.

PROCESS DESCRIPTION[28]

Approximately 900 m^3/s (1,900,000 acfm) of flue gas at 137°C 279°F) enters two Research Cottrell cold-side ESP's for primary particulate control. The ESP's remove 99.3 percent of the inlet particulate matter, to produce an outlet loading of 0.0572 g/m^3 (0.025 gr/acf) or 43 ng/J (0.1 $lb/10^6$ Btu). Two forced-draft fans then boost the gas through four absorbers supplied by the Air Correction Division of Universal Oil Products, each of which accommodates 25 percent of the flue gas. Every module is capable of treating 220 m^3/s (465,000 acfm) of flue gas. The gas is fed into the base of the absorber towers and rises through three stages of mobile bed packing, where intimate contact occurs with the limestone slurry. The pressure drop through each module is 1.8 kPa (7.0 in. H_2O); the superficial gas velocity, 4.42 m/s (14.5 ft/s); and the L/G ratio, 6.7 $liters/m^3$ (50 $gal/10^3$ ft^3). Two pumps, each of which can handle 44,700 liters/min (11,800 gal/min), provide limestone slurry for every module; and there is one spare pump per two modules. Cleaned saturated gas passes through two stages of chevron mist eliminators in each module at approximately 177 m^3/s (375,000 acfm) and 48°C (118°F). This gas contains 385 ppm of SO_2 and is then reheated to 65°C (148°F).

TABLE B-7. FGD SYSTEM DATA FOR PETERSBURG 3

Location	Petersburg, Indiana
Rating (gross), MW	532
(net), MW	515
Fuel	Bituminous coal
Heating value, kJ/kg (Btu/lb)	25,005 (10,750)
Ash, percent	8-15
Moisture, percent	10.5-16.5
Sulfur, percent	4.5
FGD process	Limestone
FGD system supplier	Air Correction Division, UOP
Application	New
Startup date (initial)	December 1977
Design removal efficiency	
Particulate (ESP), percent	99.3
Sulfur dioxide (absorbers), percent	85
Water loop	Closed
Total water makeup, liter/s per net MW (gal/min per net MW)	0.1 (1.7)
Sludge disposal	Stabilized sludge is disposed of in an onsite, unlined pond

The reheat is provided by heating ambient air with bundles of steam tubes located outside the gas ducts. The gases then discharge to a 188-m (616-ft) stack.

Spent scrubbing solution is discharged from the TCA modules to a waste slurry recycle tank, where chemical reactions are completed. Flue gas cleaning wastes, which include calcium sulfite, calcium sulfate, calcium carbonate, and fly ash, are bled from the absorbers and discharged to a thickener, where the waste solids settle out. Thickener overflow is returned to the process; and thickener underflow, with a solids content of 35 percent, is discharged to an International Utility Conversion Systems installation for chemical fixation. The stabilized sludge is transported by conveyor to trucks that deliver the material to an onsite, unlined, disposal pond approximately 300 m (1000 ft) from the fixation area. Clarified water is returned to the process for further use.

PERFORMANCE HISTORY[29]

The initial two TCA modules were put in operation by December 12, 1977; the remaining two, by the end of the same month. During the winter of 1977, temporary enclosures had to be erected around segments of the FGD system until heat tracing could be installed to prevent freezing in the liquid circuit. As of October 1978, the system was still undergoing design modification as shakedown and debugging operations continued. Since December 1977, the utility has encountered problems with a recycle tank agitator, the fly-ash removal system, the liquid circuit, and the control valve and piping areas. Reliable performance data have not yet been made available by the utility.

FUTURE PLANS[30]

Indianapolis Power and Light has awarded a contract to Research Cottrell for a limestone FGD system on Petersburg 4, which is scheduled to begin operations in April 1982. The SO_2

removal efficiency at Petersburg 4 is expected to be 80 percent for the same type of high-sulfur coal burned in Petersburg 3. Sludge will be dewatered and mixed with fly ash to produce a dry, stabilized product. Plant construction began in December 1977.

KANSAS CITY POWER AND LIGHT

LA CYGNE 1

PERFORMANCE HISTORY[31,32]

Because of continuing modifications and improved operating procedures, the availability of the La Cygne 1 FGD system has steadily improved since startup in 1973. The averages were 76.3, 84.3, 92.0, and 92.5 percent for 1974, 1975, 1976, and 1977, respectively. From January through September 1978, the average availability was 93.2 percent. With the addition of the eighth module in April 1977, continuous daytime load capability now exceeds 800 MW without appreciably affecting scrubber operation.

A performance test on August 26, 1977, indicated that module gas flow remained below maximum design capability, that the induced- and forced-draft fans were loaded substantially below rating, and that most subsystems were properly balanced. The total SO_2 removal efficiency averaged 77 percent, with the averages for individual modules ranging from 65 to 80 percent. Particulate emissions from the plant have met EPA and Kansas State requirements, although work is continuing to achieve further reductions in such emissions from this unit.

Limestone utilization was greatly improved in early 1977 with improved pH control. In the past, it was almost impossible to maintain inline glass cells without caking the limestone during shutdown or eroding the cells during operation with the high concentration of fly ash. Proper maintenance, including acid flushing, sonic cleaning, and periodic water backflushing, has produced reliable pH readings, reduced limestone use by approximately 30 percent, and improved control of scaling.

Mist eliminator plugging or scaling has not been a problem at La Cygne since the intermittent wash system was eliminated and the continuous wash system was moved from underneath to above the first mist eliminator. More nozzles were added to the continuous wash system, so that its water delivery rate increased from 8.8 liters/s (140 gal/min) to 15 liters/s (230 gal/min).

Carryover to the blades of the induced-draft fans continues to require regular washings. Each fan must now be cleaned every 4 to 7 days. The high-pressure wash is seldom necessary any more. A "spinning" process with low-pressure hoses has been very effective in cleaning fans while they are out of service. The washings are usually done as preventive maintenance, but fans must be taken out of service when bearing vibrations become excessive.

Rubber pipe and pump linings have been an increasing maintenance problem. After approximately 5 years of operation, some materials that have not been modified are wearing out. Rubber linings that tear out may damage other pipes, pumps, or plug nozzles and allow the steel pipes to wear through.

Corrosion of carbon steel in the duct work, dampers, induced-draft fan rotors and housings, breeching, and stack liner continues to be a major problem. The burning of high-sulfur coal in conjunction with module outages can result in enormous concentrations of sulfurous and sulfuric acid on these surfaces. Diligent surveillance by maintenance engineers is needed to prevent such "cold-end corrosion" damage, and unit outages are planned to take into consideration temperatures and time requirements for applying special coatings.

The scrubber operating and maintenance force is being increased to 54 people by adding one electrician and two technicians. Continued improvements in operating procedures and stable equipment operation should permit analysis of improved chemistry and control parameters. The current effort to maintain pH cells and SO_2 analyzers may require an increase in the manpower force. There are also increased demands on present maintenance

personnel to accumulate, record, and evaluate operating data on water saturation trends, limestone utilization, wear rates of draft fans, failures of reheater bundles, and lined pumps, replacement of nozzles and rubber-lined pipe, use of spare parts, etc. The operators are also busy updating operational and special instructions and reviewing safety and training procedures.

FGD data for La Cygne 1 are summarized in Table B-8.

FUTURE PLANS[33]

Proposed modifications and activities include the following:

- Installation of an improved steam source to permit additional steam bundles for optimum reheat.
- Construction of an additional sludge pond for deposit of spent scrubber slurry for approximately 30 years. Adding another disposal pond might also allow clear water to be recycled to the scrubber for improved chemistry.
- Installation of a second mist eliminator in the remaining five modules and evaluation of the addition of a third mist eliminator.
- Initiation of a study on the submicron fly ash and sulfuric acid mist that pass through the scrubber without being collected.
- Continuation of work to devise a better method to clean inline reheat tubes without taking equipment out of service.

TABLE B-8. FGD SYSTEM DATA FOR LA CYGNE 1

Location	La Cygne, Kansas
Rating (gross), MW	874
(net), MW	820
Fuel	Subbituminous coal
Heating value, kJ/kg (Btu/lb)	21,000-22,600 (9,000-9,700)
Ash, percent	25
Moisture, percent	8.6
Sulfur, percent	5
Chloride, percent	0.027
FGD process	Limestone
FGD system supplier	Babcock and Wilcox
Application	New
Startup date (initial)	February 1973
(commercial)	June 1973
Design removal efficiency	
Particulate, percent	99.5
Sulfur dioxide, percent	80
Water loop	Open
Total water makeup, liter/s per net MW (gal/min per net MW)	0.088 (1.4)
Sludge disposal	Unstabilized sludge is disposed of onsite in an unlined pond

KANSAS POWER AND LIGHT COMPANY

JEFFREY 1

BACKGROUND INFORMATION[34,35]

Kansas Power and Light (KP&L) Company is developing a new 2880-MW (gross) coal-fired power generating station known as the Jeffrey Energy Center in Pottawatomie County, near Belvue, Kansas. The station is composed of four 720-MW (gross) units, of which the first two are scheduled for commercial operation in October 1978 and June 1980 and the latter two, in 1982 and 1984. All units will fire low-sulfur (0.32 percent sulfur) Wyoming coal having a heating value of 18,900 kJ/kg (8125 Btu/lb), an ash content of 5.8 percent, and a moisture content of 30.0 percent.

The pulverized-coal-fired steam generators and emissions control systems for Jeffrey 1 and 2 are designed and supplied by Combustion Engineering; and the turbine generators, by Allis Chalmers. Jeffrey 1 began operation in August 1978. Jeffrey 2 is currently under construction.

POLLUTION CONTROL[36]

The emissions control system for each unit includes the following: an over-fire air system at the tangential burners for control of nitrogen oxides; two cold-side ESP's with an efficiency of 99.0 percent and crossover ducts upstream and downstream of the ESP's for control of particulates; and four induced-draft fans and six pressurized vertical spray towers for control of SO_2.

The six spray towers, one of which is a spare, are designed to remove SO_2 from 75 percent of the flue gas. The remaining 25 percent of the flue gas is bypassed around the towers to provide

reheat to the scrubbed gas before discharge to the atmosphere through separate 183-m (600-ft) stacks. Each spray tower has two spray headers located 4 and 8 m (13 and 26 ft) above the gas inlet and is equipped with louver isolation and bypass dampers that permit module isolation from the gas path during periods of inactivity (reduced load, spare duty, or maintenance).

Limestone is used for SO_2 removal. The limestone is received as rock at the plant and ground by wet ball mills, each capable of handling 11 Mg/h (12 tons/h). There are three mills for Jeffrey 1 and 2, leaving one ball mill as a spare.

Four reaction tanks are provided per FGD system. Two of these tanks serve four spray towers with each tank shared by two towers. The other two reaction tanks serve only one spray tower each.

A mixing chamber is provided for each system to permit mixing and drying of the scrubbed gas stream with the bypass gas stream before discharge to the atmosphere. The mist eliminators are identical in design and construction to those at KP&L's Lawrence station, which are A-frame, two-stage mist eliminators constructed of fiber-reinforced plastic (FRP) with a bulk-entrainment separator. Also like the Lawrence station, the modules are constructed of 316 low-carbon stainless steel.

Spent absorbent collected in the reaction tanks is bled to a common transfer tank as a slurry with a solids content of 10 percent. The sludge is currently mixed with bottom ash and disposed onsite in the bottom ash pond. Water returned from the pond is blended with cooling tower blowdown and used as makeup in the reaction tanks.

Table B-9 summarizes FGD data for Jeffrey 1.

PERFORMANCE HISTORY[37]

Jeffrey 1 began operations in August 1978. As of October 1978, the unit was performing shakedown and debugging operations. Because of the unit's recent startup, reliable performance information is not available.

TABLE B-9. FGD SYSTEM DATA FOR JEFFREY 1[a]

Location	Belvue, Kansas
Rating (gross), MW	720
(net), MW	680
Fuel	Coal
Heating value, kJ/kg (Btu/lb)	18,900 (8,125)
Ash, percent	5.8
Moisture, percent	30.0
Sulfur, percent	0.32
Chloride, percent	0.01
FGD process	Limestone
FGD system supplier	Combustion Engineering
Application	New
Startup date (initial)	October 1978
Design removal efficiency	
Particulate (ESP), percent	99.0
Sulfur dioxide, percent	
Absorbers	80
Overall[a]	60
Water loop	Closed[b]
Total water makeup, liter/s per net MW (gal/min per net MW)	0.04 (0.6)
Sludge disposal	Unstabilized sludge is disposed of in an onsite, unlined pond

[a] Twenty-five percent of the flue gas bypasses the scrubbing system.

[b] Closed water loop operation for this system verified by the utility during the Oct. - Nove. 1979 EPA Utility FGD Survey Report update.

FUTURE PLANS[38]

Jeffrey 2 is scheduled to commence operation in June 1980. The unit is currently under construction.

KANSAS POWER AND LIGHT COMPANY

LAWRENCE 4 AND 5

BACKGROUND INFORMATION[39]

The Lawrence Energy Center is an existing 625-MW (gross) power generating station owned and operated by KP&L in Douglas County, near Lawrence, Kansas. The station consists of five units. Lawrence 1 was built in 1939 and is a 10-MW turbine now powered by extraction steam from Lawrence 5. Lawrence 2 and 3 were placed in service in 1950 and 1956; they are peaking units that can fire either oil or gas and are rated at 30 and 60 MW, respectively. Lawrence 4 and 5 began operation in 1959 and 1971. Although originally multiple-fuel-fired units, they now exclusively fire coal. These cyclic-load units are rated at 125 and 400 MW, respectively. The steam generators for Lawrence 4 and 5 are balanced-draft, tangentially fired units supplied by Combustion Engineering. Lawrence 5 produces 1272 Mg (2,805,000 lb) per hour of superheat steam at 540°C (1005°F) and 18.1 MPa (2620 psi).

The coal burned at Lawrence is low-sulfur (0.5 percent sulfur) subbituminous Wyoming coal with an average heating value of 23,000 kJ/kg (10,000 Btu/lb), ash content of 10 percent, and moisture content of 12 percent. Lawrence 4 consumes at full load approximately 45 Mg (50 tons) per hour of coal; and Lawrence 5, approximately 145 Mg (150 tons) per hour.

POLLUTION CONTROL[40,41]

Lawrence 4 and 5 are equipped with tail-end wet limestone scrubbing systems. In each operational scrubbing system, there are two parallel two-stage modules for the control of particulates

and SO_2. Every module consists of a rectangular, variable-throat rod-deck venturi scrubber followed by a spray tower absorber. Each system is also equipped with slurry hold tanks, mist eliminators, inline reheaters, and isolation and bypass dampers. Bypass ducts are provided so that the modules can be bypassed during periods when oil or natural gas may be burned in the boilers.

Both systems share a common limestone storage and preparation facility and a common waste disposal facility. Waste solids in the slurry circuits of Lawrence 4 are removed from the scrubbing system by liquid staging, forced oxidation, and thickening. After treatment, the waste stream has a solids content of 35 percent and is conveyed to a network of three disposal ponds. The supernatant from these ponds is returned to the process and blended with thickener overflow in the recirculation tank. Although Lawrence 4 and 5 share the same sludge disposal ponds, Lawrence 5 is not equipped with a liquid staging and thickening system. Spent slurry is forcibly oxidized by air sparging and bled from the system by effluent bleed pumps, which discharge underflow from the reaction tank directly to the ponds. Supernatant is returned to the process and added directly to the reaction tank.

The scrubbing systems were designed and supplied by Combustion Engineering. They represent a second-generation design replacement of the systems first installed on these boilers in 1968 and 1971.

The original limestone furnace-injection and tail-end scrubbing system was retrofitted on Lawrence 4 and operated from 1968 until mid-September 1976. Approximately 27,000 hours of service was accumulated before the unit was shut down to perform a scheduled turbine overhaul. During the overhaul, erection of the new scrubber modules was completed. The new system went into service in early January 1977. In the last part of September 1978, the unit was down for a scheduled turbine/boiler outage, and no FGD operations were required. Particulate removal efficiency at Lawrence 4 has been in excess of 99 percent; and SO_2 removal efficiency, as high as 96 to 98 percent.

The original limestone furnace-injection and tail-end scrubbing system was installed as new equipment on Lawrence 5 and operated from November 1971 until March 20, 1978. Approximately 23,000 hours of service time was accumulated before the unit was shut down for the tie-in of the new scrubbing system into the flue gas path. The new scrubber modules were erected directly behind the existing system, which remained in service during construction of the new system. Because the new system was designed to use the existing reaction tank, spray pumps, induced-draft fans, and stack, an outage of 6 weeks was required to complete installation. The new system began operation on April 14, 1978. Information is not available about typical particulate and SO_2 removal efficiencies at Lawrence 5.

Tables B-10 and B-11 summarize the revised FGD data for Lawrence 4 and 5, respectively.

PROCESS DESCRIPTION

The following paragraphs describe the Lawrence 4 scrubbing system. Although the Lawrence 5 scrubbing system is similar in design and operation, a number of major features are different. These differences are discussed at the end of the section.

Flue gas from the boiler passes through the air heater and is conveyed by new duct work to two scrubber modules. Each module can handle 50 percent of total capacity and consists of a rectangular, variable-throat, rod-deck, venturi scrubber followed by a spray tower absorber. Also, each module is equipped with mist eliminators, reheaters, two reaction tanks, a bypass duct, and bypass and isolation dampers.

Flue gas enters the scrubbers at 190 m^3/s (403,000 acfm) and 138°C (280°F). Each rod-deck venturi scrubber is comprised of a converging gas section and a rod section. The converging gas section directs the flue gas downward to the rod-deck section, which consists of two staggered levels of rubber-coated fiberglass rods. Limestone slurry is sprayed continuously into the scrubber by nonatomizing, fan-type, spray nozzles around the

TABLE B-10. FGD SYSTEM DATA FOR LAWRENCE 4

Location	Lawrence, Kansas
Rating (gross), MW	125
(net), MW	115
Fuel	Coal
Heating value, kJ/kg (Btu/lb)	23,000 (10,000)
Ash, percent	9.8
Moisture, percent	11.8
Sulfur, percent	0.55
FGD process	Limestone
FGD system supplier	Combustion Engineering
Application	Retrofit
Startup date	January 1976
Design removal efficiency	
Particulate, percent	98.9
Sulfur dioxide, percent	73.0
Actual removal efficiency	
Particulate, percent	99+
Sulfur dioxide, percent	96-98
Water loop	Closed
Sludge disposal	Unstabilized sludge is disposed of in an onsite, unlined pond

TABLE B-11. FGD SYSTEM DATA FOR LAWRENCE 5

Location	Lawrence, Kansas
Rating (gross), MW	420
(net), MW	400
Fuel	Coal
Heating value, kJ/kg (Btu/lb)	23,000 (10,000)
Ash, percent	9.8
Moisture, percent	11.8
Sulfur, percent	0.55
FGD process	Limestone
FGD system supplier	Combustion Engineering
Application	New
Startup date (initial)	April 1978
Design removal efficiency	
Particulate, percent	98.9
Sulfur dioxide, percent	52.0
Water loop	Closed
Sludge disposal	Unstabilized sludge is disposed of in an onsite, unlined pond

perimeter of the throat area. The rod section provides a site for intimate gas-slurry contact and thus facilitates particulate and SO_2 removal. Spent slurry from the rod section falls into a collection tank located directly below the venturi section. Slurry is recycled at 227 liters/s (3600 gal/min) from the collection tank to the rod-deck scrubber by two slurry recirculation pumps, the one operational, the other spare.

After passing through the rod-deck venturi scrubber, the flue gas makes a 90-degree turn and traverses the spray tower approach before making another 90-degree turn. The saturated, cooled gas enters the spray towers at 165 m^3/s (349,000 acfm) and at 52°C (124°F). Additional SO_2 scrubbing occurs as the gas flows upward through the open towers, where it is contacted by slurry through two levels of countercurrent sprays.

Spent slurry feeds by gravity into a reaction tank directly below each spray tower. One pump recycles slurry from the reaction tank to the spray tower at 335 liters/s (5300 gal/min).

Entrained droplets of moisture and slurry are removed in a mist elimination section in the spray towers. Each mist eliminator has an A-frame design and is comprised of a bulk-entrainment separator followed by two stages of chevron vanes.

After the mist eliminators, the saturated gas stream is reheated by inline carbon steel reheaters. One reheater is provided for each spray tower, and each reheater consists of four rows of circumferentially finned tubes arranged in a staggered fashion. The heating medium is hot water from the feed water deaerator of the boiler. The reheaters increase the temperature of the gas stream approximately 11°C (20°F). The reheated gas stream flows through the discharge ducts leading to the induced-draft fans and stacks, which discharge the gas to the atmosphere.

The Lawrence 5 scrubbing system closely resembles the Lawrence 4 system. Two scrubbing modules, each consisting of a rod-deck scrubber with a spray tower absorber, are provided to treat 100 percent of the flue gas from the steam generator. In

addition, the system shares the limestone handling and preparation facilities and the sludge disposal ponds used by Lawrence 4. Several major features, however, are different:

- Inlet gas enters the Lawrence 5 scrubbing system at 1858 m^3/s (3,937,000 acfm) and 149°C (300°F). Because the flue gas flow and temperature are greater than those for the Lawrence 4 system, the modules are significantly larger.

- The flue gas is contacted by a single level of slurry sprays in the spray tower.

- A single reaction tank receives the spent slurry from both modules, as well as the fresh limestone slurry introduced into the system.

- Lawrence 5 is not equipped with a thickener or any other dewatering device for separation of solids from liquid prior to disposal.

PERFORMANCE HISTORY[42-44]

No lost boiler capacity has been reported at Lawrence 4 since January 1977, when the limestone slurry spray towers were started. Although availability has been 100 percent, Lawrence 4 experienced some freezing in the thickener underflow discharge piping and consequent clarifier plugging in January 1978. The freezeup problem continued through March 1978, but FGD operations continued because two fire hoses were used to pump the underflow solids to the disposal pond. The utility reported no outages through the middle of September 1978.

Construction continued into the first quarter of 1978 at Lawrence 5 on the replacement of the original FGD system, which continued to operate until March 20, 1978. It was then pulled off the line so that the new system could be tied into the gas path. The new system began operation on April 14, 1978, and has continued with 100 percent availability; no forced outages have been reported through September 1978.

NORTHERN STATES POWER COMPANY

SHERBURNE 1 AND 2

BACKGROUND INFORMATION[45]

The Sherburne County Generating Plant is a new four-unit 3160-MW (gross), coal-fired station located in Sherburne County, near Becker, Minnesota. The station is wholly owned and operated by the Northern States Power (NSP) Company, which serves the energy needs of Minnesota, Wisconsin, North Dakota, and South Dakota. Sherburne 1 and 2 are currently operational. Sherburne 1 was initially placed in service on March 16, 1976, and began full commercial operation on May 1, 1976. Sherburne 2 was initially placed in service on January 25, 1977, and started full commercial operation on April 1, 1977. Sherburne 3 and 4 are currently in the planning stage and are scheduled to begin operation in May 1984 and May 1987, respectively.

Sherburne 1 and 2 are each rated at 720 MW (gross) and fire low-sulfur (0.8 percent sulfur) subbituminous coal from the Colstrip and Sarpy Creek areas of southern Montana. This coal has a heating value of 19,800 kJ/kg (8,500 Btu/lb), ash content of 9 percent, and moisture content of 25 percent.

POLLUTION CONTROL[46]

To meet particulate and SO_2 emission regulations promulgated by the Minnesota Pollution Control Agency, each unit is equipped with a two-stage wet scrubbing system using alkaline fly ash and limestone. The scrubbing systems were designed and supplied by CE; and each consists of 12 two-stage scrubber modules, 11 of which are required for full-load operation. The modules are arranged in a four-by-three matrix. Each module includes a

variable-throat rod-deck venturi scrubber, a single-stage marble-bed absorber, a two-stage chevron mist eliminator, and an inline hot-water reheater. Downstream of the modules are four induced-draft fans, one for each group of three modules. The induced-draft fans operate in tandem with two forced-draft fans to compensate for gas-side draft losses in the unit. All spent scrubbing slurry is concentrated in a thickener and disposed of in an onsite, clay-lined settling pond, from which supernatant is returned to each scrubbing system for additional use.

Alkalinity for SO_2 comes from the calcium oxide in the collected fly ash and calcium carbonate in the limestone additive. Raw limestone rock is received at the plant and ground in wet ball mills to form a slurry with a solids content of 4 percent. This slurry is added to the internal reaction tank of each scrubber module.

The Sherburne scrubbing systems were designed for a minimum availability of 90 percent while achieving the following particulate and SO_2 control levels: particulate matter in the flue gas exiting the scrubber should not exceed 1 percent of the inlet content or 0.09 g/m^3 (0.04 gr/scf), whichever is greater; SO_2 in the flue gas exiting the scrubber should not exceed 50 percent of the inlet content or 200 ppm, whichever is greater.

Tables B-12 and B-13 summarize the FGD data for Sherburne 1 and 2.

PROCESS DESCRIPTION[47,48]

Flue gas from the steam generator leaves the air preheaters at approximately 154°C (310°F) and enters the scrubbing system through one of the 12 scrubber modules. After passing the inlet damper, the flue gas goes into the module's first stage, the rectangular-throat venturi section, which contains two parallel rows of horizontal rods perpendicular to the flue gas flow. The slurry spray is introduced just prior to these rods. With the narrowing of the venturi throat and quick increase in the gas velocity, particulate capture and SO_2 absorption by slurry droplets are enhanced.

TABLE B-12. FGD SYSTEM DATA FOR SHERBURNE 1

Location	Becker, Minnesota
Rating (gross), MW	720
(net), MW	680
Fuel	Subbituminous coal
Heating value, kJ/kg (Btu/lb)	19,300 (8,300)
Ash, percent	9.0
Moisture, percent	25.0
Sulfur, percent	0.8
FGD process	Alkaline fly ash with limestone
FGD system supplier	Combustion Engineering
Application	New
Startup date (initial)	March 16, 1976
(commercial)	May 1, 1976
Design removal efficiency	
Particulate, percent	99
Sulfur dioxide, percent	50
Water loop	Open
Total water makeup, liter/s per net MW (gal/min per net MW)	0.071 (1.13)
Sludge disposal	Forcibly oxidized sludge is disposed of in an onsite, clay-lined settling pond

TABLE B-13. FGD SYSTEM DATA FOR SHERBURNE 2

Location	Becker, Minnesota
Rating (gross), MW (net), MW	720 680
Fuel Heating value, kJ/kg (Btu/lb) Ash, percent Moisture, percent Sulfur, percent	Subbituminous coal 19,300 (8,300) 9.0 25.0 0.8
FGD process	Limestone with alkaline fly ash
FGD system supplier	Combustion Engineering
Application	New
Startup date (initial) (commercial)	January 25, 1977 April 1, 1977
Design removal efficiency Particulate, percent Sulfur dioxide, percent	 99 50
Water loop	Open
Total water makeup, liter/s per net MW (gal/min per net MW)	0.071 (1.13)
Sludge disposal	Forcibly oxidized sludge is disposed of in an onsite, clay-lined settling pond

The flue gas, however, still contains a significant portion of the inlet SO_2. It then travels into the main part of the scrubber, where contact occurs with both the slurry on the glass-marble bed and the slurry being sprayed to the bed by underbed spray nozzles.

The flue gas next passes through the two-stage mist elimination section, consisting of three passes of chevron vanes per stage. The temperature of the gas at the mist eliminator exit is 55°C (131°F). To prevent condensation of the equilibrium moisture, the gas passes upwards through an inline reheater with finned tubes heated by hot-water heat. The reheater increases the scrubbed gas temperature to approximately 77°C (171°F). The flue gas leaves the reheater and travels through the outlet duct work to induced-draft fans, two outlet breeching sections, and finally the flues in the stack (one flue per unit).

There are four impoundment areas: the bottom ash pond, fly ash pond, recycle basin, and holding basin. These areas function as the plant's primary solid and liquid waste disposal system. Bottom ash from the steam generators is disposed of in one diked impoundment pond, and flue gas cleaning wastes, in another. Both ponds are clay-lined at the bottom and contain a clay core in the dikes to minimize seepage. Flue gas cleaning wastes are discharged to the fly ash pond at approximately 38 Mg (42 tons) of solids per hour at full load.

PERFORMANCE HISTORY[49,50]

The Sherburne 1 and 2 scrubbing systems began operation simultaneously with the power generating units and were certified commercial on May 1, 1976, and April 1, 1977, respectively. Operation during and after startup has revealed a number of chemical, mechanical, and design problems. The major problems included failure of the inline slurry recirculation strainers with consequent severe plugging of nozzles, erosion of the rods and compartment in the rod-deck venturi scrubbers, erosion of the sidewalls of the internal reaction tank associated with the

venturi scrubbers, plugging in the mist eliminators, corrosion of reheater tubes, premature failure of the rubber lining in the slurry piping, premature failure of the recirculation pump impellers, and premature failure of the protective fiberglass lining in some scrubber modules.

Virtually all problems have been or are being resolved through system design modifications. These modifications and the additional operating experience gained by the utility have increased system availability. Since September 1977, the Sherburne 1 and 2 scrubbing systems have achieved system availabilities averaging 93 and 94 percent, respectively. These averages are well above the minimum design availability level of 90 percent.

Performance tests and continuous monitoring data at Sherburne 1 and 2 have demonstrated compliance with emission regulations. Typically, the systems have removed on a dry basis approximately 99 percent of the inlet particulate matter, with an inlet loading of 6.9 g/m^3 (3.0 gr/scf) and an outlet loading of 0.09 g/m^3 (0.04 gr/scf). From 55 to 60 percent of the inlet SO_2 has also been removed, with a typical inlet SO_2 content of 700 ppm and outlet content of 300 ppm. The only problem encountered to date has been compliance with opacity requirements. Even when the systems have met or exceeded design particulate control levels, opacity has usually ranged from 40 to 45 percent, or about twice the regulatory limitation.

FUTURE PLANS[51,52]

Sherburne 3 and 4, each of which is rated at 860 ME (gross), will be erected alongside Sherburne 1 and 2 and equipped with CE wet scrubbing systems using alkaline fly ash and limestone. Each system will include eight two-stage scrubber modules, seven of which will be required for full-load operation. The modules will utilize rod-deck venturi scrubbers for particulate control and vertical countercurrent spray towers for absorption of SO_2. These systems are designed to remove 99.5 percent of inlet

particulates and 80 percent of inlet SO_2. Presently, NSP and CE are conducting tests on module 101 of Sherburne 1 to determine the design and operating characteristics of the Sherburne 3 and 4 scrubbing systems.

SOUTH CAROLINA PUBLIC SERVICE AUTHORITY

WINYAH 2

BACKGROUND INFORMATION

The Winyah Power Station of South Carolina Public Service Authority (SCPSA) is located in Georgetown, South Carolina. South Carolina Public Service now operates two of the four units planned for the station. Winyah 1 and 2 are rated at 315 and 280 MW (gross), respectively. Units 3 and 4 are identical 280-MW (gross) units planned for commercial operation in 1980 and 1981.

The electric power generating facilities at Winyah 2 consist of a pulverized-coal-fired steam generator and turbine generator. Winyah 2 began operation in July 1977.

The coal burned at this unit is medium-sulfur (from 1.0 percent to 1.2 percent sulfur), bituminous Virginia coal with a heating value of 26,800 kJ/kg (11,500 Btu/lb), ash content of 13.5 percent, and moisture content from 6.5 to 7.0 percent.

POLLUTION CONTROL

A cold-side ESP designed by RC to be 99.4 percent efficient provides primary particulate control for Winyah 2. The SO_2 is controlled with a limestone slurry FGD system supplied by Babcock and Wilcox.

The FGD system consists of one scrubbing train, which includes a venturi scrubber and tray tower absorber. The FGD system scrubs 50 percent of the flue gas with a guaranteed SO_2 removal efficiency of 69 percent. Cleaned saturated flue gas from the FGD system is mixed with hot bypass flue gas for reheat.

When the thickener is in use, spent slurry with a solids content of 35 percent is discharged at 5.85 Mg/h (6.45 tons/h)

and pumped to an onsite, unlined, diked pond, capable of holding the wastes from 20 years of operation. The utility, however, is currently bypassing the thickener circuit, so that the solids content of the discharged waste is far below 35 percent.

FGD system data are summarized in Table B-14.

PROCESS DESCRIPTION[53,54]

Flue gas exits the ESP 384 m^3/s (814,030 acfm) and 132°C (270°F) with an outlet particulate loading of 43 ng/J (0.1 lb/10^6 Btu). A forced-draft fan boosts 50 percent of the flue gas through the scrubbing train. The gas then enters the venturi at 192 m^3/s (407,000 acfm) and 132°C (270°F). In the venturi, additional fly ash is removed, and initial SO_2 removal takes place. The design features of the venturi include a 0.7 kPa (3 in. H_2O) pressure drop, a superficial gas velocity of 27 m/s (90 ft/s), and an L/G ration of 1.9 liters/m^3 (14.4 gal/10^3 ft^3). The saturated gas flows at 159 m^3/s (338,000 acfm) and 52°C (126°F) to the tray tower, where SO_2 removal is completed. The design features of the absorber include a 1.1 kPa (4.5 in. H_2O) pressure drop, a superficial gas velocity of 3.2 m/s (10.5 ft/s), and an L/G ratio of 6.4 liters/m^3 (47.5 gal/10^3 ft^3). The cleaned gas flows through the mist eliminator to a common duct with the hot bypassed flue gas for reheat before discharge to the stack. The scrubbing solution is a limestone slurry with a solids content of 20 percent. The slurry is fed to the FGD system at 130 percent stoichiometry. Particulate removal efficiency has averaged 99.55 percent; and total SO_2 removal efficiency, 35 percent (935 ppm absorber inlet, 294 ppm absorber outlet).

PERFORMANCE HISTORY[55,56]

Winyah 2 began FGD operations in July 1977 and has experienced virtually 100 percent availability. As of October 1978, the utility had reported only minor scaling and plugging, which was rectified by general maintenance. A forced outage related to

TABLE B-14. FGD SYSTEM DATA FOR WINYAH 2

Location	Georgetown, South Carolina
Rating (gross), MW	280
(net), MW	258
Fuel	Coal
Heating value, kJ/kg (Btu/lb)	26,800 (11,500)
Ash, percent	13.5
Moisture, percent	6.5-7.0
Sulfur, percent	1.0-1.2
FGD process	Limestone
FGD system supplier	Babcock and Wilcox
Application	New
Startup date (initial)	July 1977
Design removal efficiency	
Particulate, percent	99.4
Sulfur dioxide, percent	
Absorbers	69
Overall (50 percent bypass)	34.5
Actual removal efficiency	
Particulate	99.4
Sulfur dioxide	
Absorbers	85.0
Overall (50 percent bypass)	42.5
Water loop	Open
Total water makeup, liter/s per net MW (gal/min per net MW)[a]	0.045 (0.714)
Sludge disposal	Unstabilized sludge is disposed of in an onsite, unlined pond

[a] At 140-MW FGD capacity.

the FGD system occurred in January 1978 because of problems with the SO_2 continuous analyzers. The SO_2 analyzers required several sample line replacements and eventually heat tracings around the units.

Performance data for availability, operability, reliability, and utilization have not yet been disclosed by SCPSA.

FUTURE PLANS[57,58]

Two additional units, each rated at 280 MW (gross), are planned by SCPSA at Winyah Station. Winyah 3 and 4 will use RS steam generators. Winyah 3 will use ESP's from RC for particulate collection and an FGD system from Babcock and Wilcox for SO_2 removal. Winyah 3 will scrub 100 percent of the flue gas and, unlike Winyah 2, will include an indirect steam-coil reheat system that will heat ambient air and inject it into the FGD system exit. Winyah 3 is scheduled to start up in May 1980. Winyah 4 is scheduled to commence operation in May 1982.

SOUTHERN MISSISSIPPI ELECTRIC

R. D. MORROW 1

BACKGROUND INFORMATION[59]

R. D. Morrow Power Station of Southern Mississippi Electric is a two-unit station (Unit 2 is under construction) in Hattisburg, Mississippi. R. D. Morrow 1 and 2 will be identical 200-MW (gross) units.

The electric power generating facilities at R. D. Morrow 1 consist of an RS pulverized-coal-fired steam generator with turbine generator. R. D. Morrow 1 began operation in August 1978.

The coal burned at this unit is medium-sulfur (1.0 percent sulfur) coal with a heating value of 27,900 kJ/kg (12,000 Btu/lb) and an ash content of 8 percent. The coal (as burned) specifications will be altered when the coal prewashing facility that is under construction goes into operation.

POLLUTION CONTROL[60]

A Buell-Envirotech ESP with a design efficiency of 99.6 percent provides primary particulate control for R. D. Morrow 1. The SO_2 is controlled with a limestone slurry FGD system supplied by Riley Stoker/Environeering. The system consists of a venturi rod scrubber with a mild steel (carbon steel) shell and a glass-flake liner (including the outlet duct work). The inlet duct work made of carbon steel. The scrubber includes seven layers of stainless steel rods that are 1.9 cm (0.75 in.) in diameter and spaced roughly 2.5 cm (1 in.) apart. The scrubber is 27 m (90 ft) high, 12 m (40 ft) wide, and 3 m (10 ft) deep. The ESP removes particulates from 100 percent of the flue gases, and the

FGD module scrubs 62 percent of the flue gas with a guaranteed SO_2 removal efficiency of 85 percent. The FGD module includes a mist eliminator near the flue gas exit and a reheat system that allows 38 percent of the hot flue gas to bypass the scrubber and rejoin the cleaned saturated gas at the scrubber gas exit in a single duct to the stack. The scrubber pressure drop is 2 kPa (8 in. H_2O). The overall SO_2 removal efficiency is designed to be 53 percent.

The slurry circulated through the scrubber is maintained at a minimum pH of 5 and a maximum solids level of 20 percent. The spent slurry is concentrated in a thickener, and the thickened underflow is stabilized with fly ash in a pug mill after being dewatered by a vacuum filter to a solids content of 60 percent. Stabilized sludge is then trucked to an offsite landfill. The thickener overflow is recirculated back to the FGD system.

Table B-15 summarizes FGD system data for R. D. Morrow 1.

PROCESS DESCRIPTION[61]

Flue gas exits the boiler and flows into the hot-side ESP, designed to remove 99.6 percent of particulates. The flue gas then passes through the boiler air preheater. An induced-draft fan draws 62 percent of the hot gas off to the scrubbing system at 192.1 m^3/g (406,940 scfm) and 132°C (270°F). The 38 percent of the flue gas that bypasses the scrubbing system is used to reheat the wet scrubbed gas so that the total stack gas temperature remains above the dew point and acid fallout is avoided.

The flue gas enters the base of the rod-deck scrubber module and flows upward. After turning a 90-degree angle, it encounters limestone slurry in a countercurrent fashion through the turbulence created by the sprays, the venturi rods, and the gas flow. The cleaned, saturated gas turns 90 degrees back toward a vertical mist eliminator section and exits the scrubber at 165.9 m^3/g (351,455 scfm) and 52°C (126°F).

TABLE B-15. FGD SYSTEM DATA FOR R.D. MORROW 1

Location	Hattisburg, Mississippi
Rating (gross), MW	200
(net), MW	180
Fuel	Coal
Heating value, kJ/kg (Btu/lb)	27,900 (12,000)
Ash, percent	8.0
Moisture, percent	8.0
Sulfur, percent	1.0
FGD process	Limestone
FGD system supplier	Riley Stoker/Environeering
Application	New
Startup date (initial)	August 1978
Design removal efficiency	
Particulate (ESP), percent	99.6
Sulfur dioxide, percent	
Absorber	85
Overall (62 percent of gas scrubbed)	52.7
Water loop	Closed
Total water makeup, liter/s per net MW (gal/min per net MW)	0.11 (1.77)
Sludge disposal	Stabilized, dewatered sludge is trucked to an offsite landfill

PERFORMANCE HISTORY[62,63]

The FGD system at R. D. Morrow 1 began operation in August 1978. As of October 1978, the unit was still involved with shakedown and debugging operations. Because of the recent startup, typical performance information is not available. Boiler tube leaks kept the unit off-line until November 1, but no FGD-related outages have been reported (100 percent availability).

FUTURE PLANS[64,65]

Southern Mississippi Electric is installing another unit scheduled to begin operation in January 1979. R. D. Morrow 2 will be identical to R. D. Morrow 1, with a 200-MW steam generator, Buell-Envirotech ESP designed to be 99.6 percent efficient, and limestone slurry rod-deck scrubber treating 62 percent of the flue gas. Construction is approximately 85 percent complete.

SPRINGFIELD CITY UTILITIES

SOUTHWEST 1

BACKGROUND INFORMATION[66]

The Southwest Power Station of Springfield City Utilities is a one-unit station (with plans for a second identical unit) approximately 8 km (5 miles) southwest of Springfield, Missouri. Southwest 1 is rated at 194 MW (gross), with generating facilities that consist of a Riley Stoker pulverized-coal-fired steam generator with a turbine generator. Southwest 1 began operation in April 1977 and was declared commercial in September 1977.

The coal burned at this unit is bituminous high-sulfur (3.5 percent sulfur) Kansas coal with a heating value of 29,100 kJ/kg (12,500 Btu/lb) and an ash content of 13 percent.

POLLUTION CONTROL[67,68]

A four-field, cold-side ESP designed to be 99.7 percent efficient provides primary particulate control for Southwest 1, and SO_2 is controlled by a limestone slurry FGD system. The ESP and FGD systems are supplied by the Air Correction Division of UOP. In the FGD system, there are two parallel TCA modules, each of which can handle 50 percent of total capacity. These modules scrub 100 percent of the flue gas. Southwest 1 also has facilities for limestone crushing and preparation and sludge handling. One or both FGD modules can be bypassed during an emergency or malfunction by the use of seal-air gas dampers. The SO_2 removal efficiency of the FGD facility is designed to be 80 percent. Scrubbed, saturated flue gas is discharged to the atmosphere through the main stack.

TABLE B-16. FGD SYSTEM DATA FOR SOUTHWEST 1

Location	Springfield, Missouri
Rating (gross), MW	194
(net), MW	173
Fuel	Bituminous coal
Heating value, kJ/kg (Btu/lb)	29,100 (12,500)
Ash, percent	13
Moisture, percent	6-12
Sulfur, percent	3.5
Chloride, percent	0
FGD process	Limestone
FGD system supplier	Air Correction Division, UOP
Application	New
Startup date (initial)	April 1977
(commercial)	September 1977
Design removal efficiency	
Particulate (ESP), percent	99.7
Sulfur dioxide, percent	80.0
Actual removal efficiency	
Particulate (ESP), percent	99.8
Sulfur dioxide, percent	92.0
Water loop	Closed
Sludge disposal	Unstabilized sludge is dewatered and disposed of in an onsite landfill

Flue gas cleaning wastes are discharged from the recirculation tanks to a thickener, where solids are separated; the clarified liquor is recycled. Sludge from the thickener underflow is dewatered by a rotary drum vacuum filter; and the filter cake is trucked to an onsite 40,000-m^2 (10-acre) valley landfill.

FGD data are summarized in Table B-16.

PROCESS DESCRIPTION[69,70]

Flue gas from the steam generator passes through the ESP for particulate removal and is boosted through the two TCA modules by induced-draft fans. The TCA modules are designed for 316 m^3/s (665,000 acfm) of gas at 149°C (300°F). Flue gas flows into the base of one of the TCA modules, passes through a presaturator, and rises through two levels of packing consisting of spheres 3.2 cm (1.25 inch) in diameter; limestone slurry is contacted in a countercurrent fashion. Each module is equipped with a separate recirculation tank where reactions are completed and fresh slurry is added. Flue gas cleaning wastes are discharged from these tanks. The cleaned saturated flue gas then passes through mist eliminators before it is released into the atmosphere through the 117-m (384-ft) main stack. There is no reheat system.

PERFORMANCE HISTORY[71,72]

Federal and State emission regulations require that Southwest 1 limit emissions of particulate to 43 ng/J (0.1 lb/10^6 Btu) heat input, SO_2 to 516 ng/J (1.2 lb/10^6 Btu) of heat input, and nitrogen oxide (NO_x) to 301 ng/J (0.7 lb/10^6 Btu) of heat input. Compliance tests were conducted on September 14 and 15, 1977. These tests showed an average ESP inlet dust loading of 3143 ng/J (7.31 lb/10^6 Btu) and outlet loading of 7.91 ng/J (0.0184 lb/10^6 Btu); the average ESP efficiency was thus 99.75 percent. The average inlet SO_2 concentration was 2,726 ng/J (6.34 lb/10^6 Btu); and the average outlet SO_2 concentration, 226 ng/J (0.526 lb/10^6 Bty). Typically, therefore, the scrubber removed 91.7 percent of

SO_2. The average NO_x emissions were found to be 229 ng/J (0.672 lb/10^6 Btu), which was below the emission regulation requirement.

Since September 1977, a number of modifications have taken place. During a shutdown from October 1977 through January 1978, the scrubbing system's outlet damper was replaced with 316L stainless steel (SS). A ball failure prompted the replacement of the hollow plastic spheres in the TCA packing with plastic spheres having thicker walls. The discharge ducts were relined with Ceilcote; insulation was installed around the seal air fan between the inlet dampers; and the presaturators were relined with high-molybednum steel.

Between Feburary and March 1978, an expansion fount failed on B-module between the induced-draft fan and absorbers. The scrubber was bypassed to keep the steam generator facility operating.

An FRP-liner failure occurred between April and May 1978, as well as a pump failure and a gas damper rupture. Thus, only one TCA module could be operated.

In June 1978, the mist eliminator wash system was changed from a separate closed loop for each module to a common system for both modules. The FGD facility was then plagued with instrumentation problems; and the B-module was inoperable because of the unrectified problem with the expansion joint.

By September 1978, the unit had achieved an average total FGD system availability of only 25 percent. The B-module expansion joint had still not been corrected, and another ball failure in the TCA packing necessitated replacement of the plastic spheres with solid rubber balls. From July through September 1978, the instrumentation problems were largely rectified, although some slurry line plugging occurred.

FUTURE PLANS[73]

Springfield City Utility's plans call for a second 194-MW (gross) unit at Southwest Power Station. At the time of this report, projections for Unit 2 indicated a 1981 startup.

TENNESSEE VALLEY AUTHORITY

WIDOWS CREEK 8

BACKGROUND INFORMATION[74]

Widows Creek Power Station of Tennessee Valley Authority (TVA) is an eight-unit station located near Bridgeport, Alabama. Units 1, 2, 4, 5, and 6 are each rated at 140 MW (gross). Unit 3 is rated at 150 MW (gross). Units 7 and 8 are rated at 575 and 550 MW (gross), respectively. The total station generating capacity is 1975 MW (gross).

The electric power generating facilities at Widows Creek 8 consist of a Combustion Engineering tangential-fired, balanced-draft, coal-fired steam generator with associated turbine generator. Widows Creek 8 was first placed in service in 1963 and has a net generating capacity of 516 MW.

The coal burned in this unit is bituminous, high-sulfur (3.7 percent sulfur) coal with a heating value of 26,200 kJ/kg (11,270 Btu/lb) and an ash content of 17 percent.

POLLUTION CONTROL[75,76]

A 50 percent (actual) efficient ESP supplied by Koppers provides primary particulate control. Secondary particulate control and primary SO_2 control are provided by a limestone scrubbing system designed and installed by TVA, with the scrubber modules fabricated by Polycon.

The scrubbing system consists of four parallel trains. Each train includes a variable-throat venturi scrubber followed by a multigrid tower absorber. The venturi sections are constructed of 316L SS; the multigrid towers, of carbon steel (shells) with a rubber lining and 316L SS on the lower sloping (downcomer)

sections, where the slurry falling from the grids is funneled to the recycle system. Inside each tower are five grids. The first, third, and fifth grids are made of 316L SS; the second and fourth, of fiberglass reinforced plastic. Plans for one of the towers call for the installation of packing that will be supported by the grids.

The scrubbing system includes a four-pass vertical chevron mist eliminator constructed of 316L SS. The mist eliminator system is equipped with a continuous wash system.

Reheat of the wet gas is provided by an indirect hot-air steam-coil system that raises the wet gas temperature by 28°C (50°F), to a point well above the dewpoint.

Actual particulate removal efficiency at Widows Creek 8 is 99.5 percent. Actual SO_2 removal efficiency ranges from 85 to 94 percent.

The FGD system data are summarized in Table B-17.

PROCESS DESCRIPTION[77,78]

Flue gas entering the scrubbing system from the ESP's passes through an induced-draft fan with a capacity of 190 m^3/s (400,000 acfm). The gas then enters one of the four variable-throat venturis. Each venturi is approximately 7 m (23 ft) wide and 8.5 m (28 ft) deep at the variable throat. Approximately 10 percent of the SO_2 is removed in the venturis. The wet flue gas then enters a multigrid through which it rises at 3.7 m/s (12 ft/s) and encounters the slurry in a countercurrent fashion. After turning through a four-pass vertical chevron-type mist eliminator, the gas joins air drawn from the powerhouse and pumped through steam coils that heat the air to 204°C (400°F). The stack gas temperature is 79.4°C (175°F).

PERFORMANCE HISTORY[79-82]

Since the scrubbing system began operations in May 1977, the utility has reported a number of operational difficulties.

TABLE B-17. FGD SYSTEM DATA FOR WIDOWS CREEK 8

Location	Bridgeport, Alabama
Rating (gross), MW	550
(net), MW	516
Fuel	Coal
Heating value, kJ/kg (Btu/lb)	26,200 (11,270)
Ash, percent	17
Moisture, percent	10
Sulfur, percent	3.7
FGD process	Limestone
FGD system supplier	Tennessee Valley Authority
Application	Retrofit
Startup date (initial)	May 1977
(commercial)	January 1978
Design removal efficiency	
Particulate (overall), percent	99.5
Sulfur dioxide, percent	80.0
Actual removal efficiency	
Particulate (overall), percent	99.5+
Sulfur dioxide, percent	85-94
Water loop	Open
Sludge disposal	Unstabilized sludge is disposed of in an onsite, unlined pond

Because of poor ESP performance, the induced-draft fans must handle gas with a high grain load, 11.4 to 13.7 g/m^3 (5 to 6 gr/scf). This load and the high rotor tip speed effectively sandblast the rotors. The resulting erosion causes fan inefficiency and imbalance. Excessive vibration necessitates removing the fan from service. The fan housing also suffers severe erosion.

Each scrubber-absorber train has three bottom-entry guillotine dampers, one each for the gas inlet, outlet, and bypass ducts. Initial problems with the dampers resulted from corrosion of the 316 SS seals. Because of the absence of housings and bonnets on the dampers and because the FGD system is pressurized, the dampers have been leaking ash and flue gas excessively. The drive mechanisms below the guillotine dampers have collected ash in the threads, boots, and jack screw assemblies.

The utility reported that the dampers were inoperable, except with extraordinary effort, because of electrical component failure, deterioration of boots, and drive mechanism jamming. Holes and tears have developed at numerous places in the expansion joint fine-ply fabrics.

The most serious operating problem has been the failure of rubber linings. A mid-June 1977 absorber inspection revealed that rubber lining on the downcomer of Train C had come loose; and bare metal was exposed. Patches of loose rubber and bare metal were found in other trains, but only in the sloping sections of the absorber and venturi hoppers. Replacement material was obtained and repair work was carried out in early August 1977.

A September 26, 1977, inspection of the trains during a boiler outage revealed that rubber lining on Train C was again missing and that the slurry had worn a hole through the carbon steel material of the venturi section hopper wall sloping towards the downcomer. A temporary wear plate was installed to permit operation until the scheduled boiler maintenance outage in October.

These defects, as well as other sections of loose rubber that were found during this same inspection, were all corrected during the October outage.

A January 24, 1978, inspection again revealed that large sections of liner were missing and that holes were appearing in scrubber train carbon steel shells. The utility decided to replace the rubber lining in the sloping sections with 316L SS plate welded to the carbon steel shell.

Evidence of rubber liner failures has also been found in the centrifugal pumps that send slurry from the ball mill product tank to the classifiers. The liners in these pumps have required high maintenance, possibly because of poor cyclone performance or improper pump speeds.

The sumps in the ball mill house and near the spent slurry surge tanks have been flooding. Limestone spills down into these tanks, and limestone particles settle at the bottoms of the sumps. It has thus been difficult to empty waste from these sumps to the pond.

The wet grind, rubber-lined ball mill, designed for a capacity of 45 Mg/h (50 tons/h) was not functioning as intended. During initial shakedown of the system, excessive rock and ball rejection occurred at rates above 18 Mg/h (20 tons/h). Because coarse reject material was falling into the mill slurry product tank, a chute was installed to convey the material into a barrel and avoid contamination of the finely ground product. Inspection of the product end of the ball mill revealed that the helix designed to retain balls and rock in the grinding chamber was inadequate. A perforated plate was spot welded to the existing helix and extended over the trommel screen; this plate has satisfactorily resolved the problem.

Multigrids and absorber nozzles have presented problems. The absorber section of each train has five trays of multigrids. Originally, the bottom three of these were 316 SS, and the top two were FRP. Poor spray distribution from nozzles created obvious erosion of the FRP grids; and the SS grids were brought

to the top, just below the spray nozzles. Some adjustment in the nozzle cones improved the spread of the spray but a satisfactory flow pattern had not yet been attained at the time of this report. Because of the nozzle design and slurry flow, spray cones have fallen off or have worn loose from part of their supports.

Many instrument problems have resulted from poor initial placement or inappropriate application. Particularly crucial are the pH monitors, which are submerged flow-through meters. These meters give readings on the absorber slurry flowing to the nozzles. The transmitters associated with the pH meters vibrated excessively when placed near the top of the absorber circulation tanks. Relocation of the meters to ground level and replacement of the reference electrode liquid seems to have improved reliability and performance. There has also been poor control of the feed rate of fresh limestone slurry because of a nonlinear response from a linear control signal.

Pressure drop instruments for the gas are excessively sensitive to ambient temperature changes and often go out of calibration. Annubars for gas flow and outlet SO_2 monitors are located downstream of the mist eliminator section of the scrubber and have been unreliable as a result of moisture and particulate plugging. Bracing and reverse air purging have improved instrument performance somewhat.

There has been nozzle and spray header plugging in the venturi section, partly because of excessive amounts of calcium sulfate in the slurry. This occurred because of poor pH control, which results from unreliable pH meters and poor control of fresh limestone feed.

Heavy solid particles that solidify upon drying appear to be settling in the venturi nozzle header. Until a steady state is reached and a complete chemical analysis of the system can be made, the cause of this settling cannot be identified.

Since May 1977, the average FGD system availability has been 64 percent.

FUTURE PLANS[83,84]

The TVA is currently retrofitting a Combustion Engineering scrubbing system on Widows Creek 7, so that operations can begin in October 1980. The facility under construction is a limestone slurry spray tower system.

The TVA also has plans for FGD systems on their Paradise and Johnsonville stations.

TEXAS UTILITIES

MARTIN LAKE 1 AND 2

BACKGROUND INFORMATION[85]

Martin Lake Steam Electric Station of Texas Utilities consists of four 750-MW (gross) units located in Tatum, Texas. Martin Lake 1 and 2 are operational units. Martin Lake 3 is under construction, and Martin Lake 4 is in the planning stage.

The electric power generating facilities at Martin Lake 1 and 2 consist of Combustion Engineering lignite-fired steam generators with 750-MW (gross) turbine generators. Martin Lake 1 began operation in August 1977; Martin Lake 2 in May 1978.

The coal burned at this station is low-sulfur (0.9 percent sulfur) Texas lignite with an average heating value of 17,170 kJ/kg (7,380 Btu/lb) and an ash content of 8.0 percent.

POLLUTION CONTROL[86]

Cold-side ESP's designed to be 99.4-percent efficient provide primary particulate control for Martin Lake 1 and 2. The SO_2 is controlled with limestone slurry FGD systems. The ESP's and FGD systems on both units were supplied by RC.

The FGD system on each unit consists of six parallel packed spray tower absorbers that scrub a maximum of 75 percent of the boiler flue gas with an efficiency of 95 percent (design) to achieve an overall SO_2 removal efficiency of 71 percent. Each absorber tower includes a three-stage SO_2 removal configuration followed by a two-stage mist elimination system.

Reheat is provided by the hot flue gas that goes through the ESP's, but bypasses the absorbers. In a duct before the stack, this unscrubbed gas rejoins the saturated flue gas from each absorber.

Spent scrubbing slurry from the FGD system is dewatered and mixed with fly ash and transported by rail to a landfill.

FGD system data for Martin Lake 1 and 2 are summarized in Tables B-18 and B-19, respectively.

PROCESS DESCRIPTION[87-89]

The process description provided applies to both Martin Lake 1 and 2. The Martin Lake 1 and 2 flue gas cleaning facilities are separate systems installed on separate units.

Flue gas exits the boiler, passes through the air preheater, and enters the ESP's at 1495 m^3/s (3,167,000 acfm) and 168°C (335°F). From the ESP's, the gas flows into a header for four induced-draft fans that draw the gas into a second header feeding the six absorbers and the bypass duct. The flowrate through each absorber and through the bypass duct is controlled by balancing dampers at every junction. Flue gas enters the base of each absorber tower at 177.2 m^3/s (375,350 acfm) and 168°C (335°F). The gas rises through a cyclonic quenching chamber into the absorber section of the tower at 142.9 m^3/s (302,870 acfm) and 57°C (135°F); it goes through a layer of sprays, packing, and another layer of sprays. After passing a horizontal two-stage mist eliminator near the top of the absorber tower, the saturated, cleaned gas exits the tower at 144.2 m^2/s (305,500 acfm) and 57°C (135°F) and mixes with hot, bypass gas at 541.2 m^2/s (1,146,650 acfm) and 168°C (335°F) from the second header duct. The combined gas stream enters the stack at 1264.2 m^3/s (2,678,760 acfm) and 97°C (207°F).

Spent scrubbing slurry with a solids content of 15 percent is discharged from each absorber tower into a single stream that feeds a gravity thickener 43 m (140 ft) in diameter. The scrubbing wastes are concentrated to a solids content of 35 percent, and the thickener underflow is fed to one of three centrifuges for additional dewatering. Filter cake with a solids content between 68 and 70 percent discharge from the centrifuges into a

TABLE B-18. FGD SYSTEM DATA FOR MARTIN LAKE 1

Location	Tatum, Texas
Rating (gross), MW	750
Fuel	Lignite
Heating value, kJ/kg (Btu/lb)	17,166 (7,380)
Ash, percent	8.0
Moisture, percent	33.0
Sulfur, percent	0.9
FGD process	Limestone
FGD system supplier	Research Cottrell
Application	New
Startup date (initial)	August 1977
Design removal efficiency	
Particulate (ESP), percent	99.4
Sulfur dioxide, percent	
Absorbers	95.0
Overall	70.5
Water loop	Closed
Total water makeup, liter/s per net MW (gal/min per net MW)	0.05 (0.73)
Sludge disposal	Stabilized, dewatered sludge is disposed of in an onsite landfill

TABLE B-19. FGD SYSTEM DATA FOR MARTIN LAKE 2

Location	Tatum, Texas
Rating (gross), MW	750
Fuel	Lignite
Heating value, kJ/kg (Btu/lb)	17,166 (7,380)
Ash, percent	8.0
Moisture, percent	33.0
Sulfur, percent	0.9
FGD process	Limestone
FGD system supplier	Research Cottrell
Application	New
Startup date (initial)	May 1978
Design removal efficiency	
Particulate (ESP), percent	99.4
Sulfur dioxide, percent	
Absorbers	95.0
Overall	70.5
Water loop	Closed
Total water makeup, liter/s per net MW (gal/min per net MW)	0.05 (0.73)
Sludge disposal	Stabilized, dewatered sludge is disposed of in an onsite landfill

Muller-type blender. At this point the cake combines with fly ash collected in the ESP to form a material that can be conveyed by truck and dumped. Railcars receive the blend for ultimate disposal in a landfill.

PERFORMANCE HISTORY[90,91]

Since Martin Lake 1 began operations in August 1977, a number of problems have occurred; and many modifications have been made. Information is largely unavailable for Martin Lake 2. It is assumed, however, that the Unit 1 modifications have been taken into consideration for possible incorporation in the Unit 2 design.

The utility has had a great deal of trouble isolating individual absorbers at Martin Lake. Dampers provided for the Martin Lake FGD system include a single-louver bypass damper, two consecutive louver dampers at each tower inlet, and single link-louver dampers at each tower outlet. Even with the addition of seal air blowers between the two tower inlet dampers, isolation of individual towers for personnel access and maintenance has been extremely difficult. Areas of malfunction have included bearings, seal strips, and linkages.

All gas-side expansion joints have been replaced because the original joints could not withstand exposure to slurry and deteriorated. The replacement joints were performing adequately as of October 1978.

Slurry line and spray nozzle plugging that required pipe disassembly and mechanical cleaning was discovered during shutdowns in early 1978. Such plugging was partly attributable to accumulated construction debris, pieces of fallen wetted film contactor (WFC) packing, and WFC support beams from October and November 1977.

Sonic flow switches, installed to monitor flow deviations in key process loops were found to be inadequate for an electric generating station. They were eliminated, where possible, or replaced with magnetic flowmeters.

Submerged pH meters in the quencher instrument wells experienced calibration drifts and electrical problems. After an extensive test program, the meters were replaced by flow-through devices with ultrasonic cleaners.

Sonic devices at liquid level in the quencher instrument wells experienced problems related to electronics, poor calibration, slurry foaming, fouling of transducers, and excessive variations in liquid level. These problems were addressed; and the devices have functioned adequately since October 1977, although modifications were still being made at the time of this report because of transducer problems.

Poor gas distribution at the absorber tower inlets led to the relocation of the gas flowmeters at the tower outlets. High amounts of moisture from the air and probe plugging were thought to have contributed to the poor performance of the meters.

Electric on/off operators on reagent feed and density control valves experienced numerous failures in early operation. Some electric operators were replaced with pneumatic operators, and others were modified to improve performance.

The original FRP packing support beams were replaced with 316L SS beams in January and February 1978. The FRP beams had failed completely in one tower and were on the verge of failure in several other towers when the WFC packing was removed from all towers on November 7 and 8, 1977.

Failure of these beams resulted from inadequate structural design, but was accelerated because solids accumulated in the WFC. The accumulations of solids were caused by operating the FGD system out of chemical balance. Such operation resulted from malfunctioning pH devices and on/off valve operators and the difficulty in manual control that these malfunctions created. Poor slurry distribution to the WFC may also have accelerated this buildup. Later operation with 0.6 m (2 ft) of WFC packing and with the new pneumatic valve operators produced insignificant buildup in the WFC and mist eliminator packings.

Scale buildup at the cyclonic inlets of the absorber towers was discovered in November 1977. Model testing showed that modifications to the inlets would allow operation of the towers for a full year without cleaning. These modifications have been successful and will be made on all towers.

Martin Lake 1 and 2 underwent acceptance tests during August 1978. As of October 1978, the results had not been reported. Experimental SO_2 removal efficiencies, however, have been reported by RC. Absorber towers with 1.2 m (4 ft) of WFC packing have achieved SO_2 removal greater than 99 percent. Towers with no WFC packing removed from 80 to 85 percent of SO_2 at peak tower gas velocities. This testing prompted the installation of 0.6 m (2 ft) of WFC packing in each tower and the increase of maximum tower gas throughput by 10 percent. Typical performance information is unavailable for Martin Lake Station.

FUTURE PLANS[92,93]

Texas Utilities has plans for two more 750-MW units at Martin Lake Station. The startup dates for Martin Lake 3 and 4 are December 1978 and November 1982, respectively.

Texas Utilities also plans an additional 750-MW unit, Forest Grove 1, near Athens, Texas, scheduled for startup in 1982.

TEXAS UTILITIES

MONTICELLO 3

BACKGROUND INFORMATION[94]

Monticello Steam Electric Station of Texas Utilities is a three-unit facility located in Mt. Pleasant, Texas. Monticello 1 and 2 are 575-MW (gross) units. Monticello 3 is a 750-MW (gross) unit.

The electric power generating facilities for Monticello 3 consist of a CE lignite-fired steam generator with 750-MW (gross) turbine generator. Monticello 3 began operation in May 1978.

The coal burned in this unit is medium-sulfur (1.5 percent sulfur) lignite with a heating value of 15,100 to 17,500 kJ/kg (6,500 to 7,500 BTU/lb) and an ash content of 18.9 percent.

POLLUTION CONTROL[95]

Two parallel ESP's designed to be 99.5 percent efficient and supplied by Pollution Control-Walther provide primary particulate control for Monticello 3. The SO_2 is controlled with a limestone slurry FGD system supplied by Chemico.

The FGD system consists of three parallel spray towers that scrub 100 percent of the flue gas with a design SO_2 removal efficiency of 74.0 percent. The design includes a single-stage horizontal mist eliminator and two emergency bypass ducts. The saturated, cleaned gas is reheated by an indirect hot-air-injection system prior to discharge. The reheat system consists of two separate parallel units, each of which uses a fan to force ambient air through steam coils. The hot air stream is mixed with the scrubber discharge gases in a common duct leading from the modules to the stack.

Stabilized sludge is disposed in an onsite lined pond. FGD system data are summarized in Table B-20.

PROCESS DESCRIPTION[96]

Flue gas exists the boiler air heater at 1650 m^3/s (3,490,000 acfm) and 168°C (335°F) and passes through the ESP's. The gas exits the ESP's through four parallel ducts to a header, from which it is drawn by three parallel induced-draft fans at 1618 m^3/s (3,428,000 acfm) and 168°C (335°F). The three gas streams enter a second duct at 1586 m^3/s (3,359,700 acfm) and 176°C (348°F). The second duct feeds the three spray towers and two emergency bypass ducts. Flue gas flows to the base of each spray tower at 520 m^3/s (1,100,000 acfm) and 176°C (348°F); it passes through four banks of spray headers and contacts the limestone slurry in a countercurrent fashion. The scrubbed gas passes through a single-stage horizontal mist eliminator and exits the absorber at 428 m^3/s (907,000 acfm) and 61°C (141°F); it passes to a common duct serving all three modules and the two emergency bypasses. The cleaned saturated gas is reheated by two parallel indirect steam coil reheaters that feed heated ambient air into the common duct prior to the stack at the rate of 164 m^3/s (346,000 acfm) and 149°C (300°F) each. The gas stream enters the stack at 1592.3 m^3/s (3,373,912 acfm) and a 70.8°C (159.5°F).

PERFORMANCE HISTORY[97,98]

Monticello 3 began operation in May 1978 with only one of the three spray tower absorbers operating. As of October 1978, reports indicated that the unit was fully operational; but the compliance test had not been initiated. Typical performance information has not been reported by the Utility.

TABLE B-20. FGD SYSTEM DATA FOR MONTICELLO 3

Location	Mt. Pleasant, Texas
Rating (gross), MW	750
Fuel	Lignite
Heating value, kJ/kg (Btu/lb)	15,100-17,500 (6,500-7,500)
Ash, percent	18.9
Sulfur, percent	1.5
Chloride, percent	0.4
FGD process	Limestone
FGD system supplier	Chemico
Application	New
Startup date (initial)	May 1978
Design removal efficiency	
Particulate (ESP), percent	99.5
Sulfur dioxide, percent	74.0
Water loop	Closed
Total water makeup, liter/s per net MW (gal/min per net MW)	0.046 (0.729)
Sludge disposal	Stabilized sludge is disposed of in an onsite lined sludge pond

APPENDIX B

REFERENCES

1. PEDCo in-house files.

2. McIlvane Co. Details on Alabama Electric Coop. The Wet Scrubber Newsletter, 29:7, November 30, 1976.

3. PEDCo in-house files.

4. Melia, M., et. al. EPA Utility FGD Survey: August-September 1978. Preliminary Report. Prepared for the U.S. Environmental Protection Agency under Contract No. 68-02-2603. PEDCo Environmental, Inc., Cincinnati, Ohio. November 1978. p.4.

5. PEDCo in-house files.

6. Op. cit. No. 4.

7. PEDCo in-house files.

8. Laseke, B.A., Jr. Survey of Flue Gas Desulfurization System: Cholla Station, Arizona Public Service Co. EPA-600/7-78-048a. PEDCo Environmental, Inc., Cincinnati, Ohio. March 1978. pp. 2, 4, 6, 9, 11, 13, 22, 23, 26, 27, 29.

9. Ibid.

10. Op. cit. No. 4. pp. 4 and 24-25.

11. Ibid.

12. Op. cit. No. 4.

13. Op. cit. No. 4. pp. 4 and 24-25.

14. Laseke, B.A., Jr. Survey of Flue Gas Desulfurization Systems: Duck Creek Station, Central Illinois Light Company. Preliminary draft prepared for the U.S. Environmental Protection Agency under Contract No. 68-02-2603. PEDCo Environmental, Inc., Cincinnati, Ohio. December 1978. pp. 2, 4, 5, 7, 10, 11-14, 16, 18, 21, 23, 28, 32, 35, 37, 44, 45, 46, 48-50.

15. Op. cit. No. 4. pp. No. 6, 26.

16. Ibid.

17. PEDCo in-house files.

18. Op. cit. No. 14. pp. 2, 4, 5, 7, 10-14, 18, 21, 23, 28, 32, 35, 37, 44-46, 48-50.

19. Op. cit. No. 14. pp. 6, 26.

20. PEDCo in-house files.

21. Ibid.

22. Idemura, H., T. Kanai, and H. Yanagioka. Jet Bubbling Flue Gas Desulfurization Process. In: Proceedings of the Second Pacific Chemical Engineering Congress (PAChEC '77). American Institute of Chemical Engineers, New York, New York. 1977. pp. 365-370.

23. Idemura, H., and D.D. Clasen. Limestone/Gypsum Jet Bubbling Scrubbing System. In: Proceedings of the Symposium on Flue Gas Desulfurization-Hollywood, Fl., November 1977 (Volume 1). EPA-600/7-78-058a. March 1978. pp. 838-840.

24. Op. cit. No. 4. p. 34

25. PEDCo in-house files.

26. Ibid.

27. Ibid.

28. Laseke, B.A., Jr. EPA Utility FGD Survey: December 1977 - January 1978. EPA-600/7-78-051a. PEDCo Environmental, Inc., Cincinnati, Ohio. March 1978. p. 44.

29. Op. cit. No. 4. pp. 9, 35.

30. Ibid.

31. McDaniel, C.F. LaCygne Station Unit No. 1 West Scrubber Operating Experience. Presented at Utility Scrubber Conference, Denver, Colorado. March 29-30, 1978.

32. Op. cit. No. 4. p. 38.

33. Op. cit No. 31. p. 6.

34. PEDCo in-house files.

35. Power Engineering. New Generating Plants. Barrington, Illinois. May 1978. p. 8.

36. Laseke, B.A., Jr. Survey of Flue Gas Desulfurization System: Lawrence Energy Center, Kansas Power and Light Company. Preliminary report prepared for the U.S. Environmental Protection Agency under Contract No. 68-02-2603. PEDCo Environmental, Inc., Cincinnati, Ohio. January 1979. pp. vii-ix, 2, 4, 6, 7, 8, 14, 17, 19, 21-23, 25, 26, 28, 29, 31, 35, 42, 51-54, 56, 57, 63-70.

37. Op. cit. No. 4. pp. 10, 38.

38. Ibid.

39. PEDCo in-house files.

40. Ibid.

41. Op. cit. No. 36.

42. Op. cit. No. 28. p. 63.

43. Op. cit. No. 4. p. 40.

44. Ibid. p. 41.

45. PEDCo in-house files.

46. Laseke, B.A., Jr. Survey of Flue Gas Desulfurization Systems: Sherburne County Generating Plant, Northern States Power Company. Preliminary report prepared for the U.S. Environmental Protection Agency under Contract No. 68-02-2603. PEDCo Environmental, Inc., Cincinnati, Ohio. December 1978. pp. 2, 5, 7, 8, 13-15, 17-20, 22, 24, 26, 29, 33, 36, 38, 43-49, 52, 54, 56-60.

47. Ibid.

48. PEDCo in-house files.

49. Op. cit. No. 46.

50. Op. cit. No. 4. pp. 59-62.

51. PEDCo in-house files.

52. Op. cit. No. 4. pp. 14, 15.

53. Op. cit. No. 28. pp. 128, 129.

54. PEDCo in-house files.

55. Op. cit. No. 28. pp. 128, 129.

56. Op. cit. No. 4. p. 70.

57. Op. cit. No. 4. p. 17.

58. PEDCo in-house files.

59. Ibid.

60. Ibid.

61. Ibid.

62. Op. cit. No. 4. pp. 18, 71.

63. PEDCo in-house files.

64. Op. cit. No. 64. pp. 18, 71.

65. PEDCo in-house files.

66. Ibid.

67. Ibid.

68. Op. cit. No. 28. pp. 130-132.

69. PEDCo in-house files.

70. Op. cit. No. 28. pp. 130-132.

71. Op. cit. No. 4. pp. 19, 72, 73.

72. Universal Oil Products, Air Correction Division. Stack Emission Compliance Test Report for the City Utilities of Springfield, Missouri, Southwest Power Station. Des Plaines, Illinois. September 1977.

73. PEDCo in-house files.

74. Ibid.

75. Ibid.

76. Op. cit. No. 28. pp. 142, 143.

77. Ibid.

78. PEDCo in-house files.

79. Ibid.

80. Op. cit. No. 28. pp. 142, 143.

81. Op. cit. No. 4. pp. 77, 78.

82. Wells, W.L., W.B. Muirhead, and J.H. Buckner. TVA's Experience with Limestone Scrubbers at the 550-MW Widows Creek Unit 8. Presented at American Power Conference, Chicago, Illinois. April 24-26, 1978.

83. PEDCo in-house files.

84. Op. cit. No. 41. pp. 77, 78.

85. PEDCo in-house files.

86. Ibid.

87. Ibid.

88. Op. cit. No. 4. pp. 20, 21, 79, 80.

89. Ballard, B., and M. Richman FGD Systems Operation at Martin Lake Steam Electric Station. Presented at the Joint Power Generation Conference, Dallas, Texas. September 10-13, 1978.

90. Ibid.

91. PEDCo in-house files.

92. Ibid.

93. Op. cit. No. 4. pp. 20, 21, 79, 80.

94. PEDCo in-house files.

95. Ibid.

96. Ibid.

97. Ibid.

98. Op. cit. No. 4. pp. 21, 81.

APPENDIX C. SUMMARY OF CHANGES: AUGUST 1975 TO OCTOBER 1978

Period Company Station, unit	Operational		Under construction		Contract awarded		Letter of intent		Requesting/ evaluating bids		Considering		Terminated[a]		Total	
	No.	MW	No.	MW	No.	MW	No.	MW	No.	MW	No.	MW	No.	MW	No.	MW
July 31, 1977	29	8,914	28	11,810	23	11,810	5	1,892	5	2,825	35	16,031	16	1,488	125	53,352
Alabama Electric																
Tombigbee 2	+1	225	-1	225												
Tombigbee 3			+1	225	-1	225										
Arizona Electric																
Apache 2	+1	200	-1	200												
Arizona Public Service																
Cholla 2	+1	250	-1	250												
Cholla 4			+1	350							-1	350				
Four Corners 1											+1	175			+1	175
Four Corners 2											+1	175			+1	175
Four Corners 3											+1	229			+1	229
Four Corners 4					+1	755					-1	755				
Four Corners 5					+1	755					-1	755				
Associated Electric																
Thomas Hill 3					+1	670									+1	670
Basin Electric Power																
Antelope Valley 1					+1	455					-1	455				
Antelope Valley 2					+1	455									+1	455
Laramie River 1			+1	570	-1	570										
Laramie River 2			+1	570	-1	570										
Laramie River 3									+1	550	-1	550				
Big River Rural Electric																
Green 2			+1	240	-1	240									+1	240
Board of Municipal Utilities																
Sikeston 1			+1	235	-1	235										

(continued)

APPENDIX C (continued)

Period Company Station, unit	Operational		Under construction		Contract awarded		Letter of intent		Requesting/ evaluating bids		Considering		Terminated[a]		Total	
	No.	MW	No.	MW	No.	MW	No.	MW	No.	MW	No.	MW	No.	MW	No.	MW
Brazos Electric Power																
San Miguel 1			+1	400	-1	400										
Central Illinois Light																
Duck Creek 1	+1	400	-1	400												
Duck Creek 2									+1	400	-1	400				
Cincinnati Gas & Electric																
East Bend 2					+1	600					-1	600				
Colorado Ute																
Craig 1			+1	450	-1	450										
Craig 2			+1	450	-1	450										
Columbus & So. Ohio Elec.																
Conesville 6	+1	400	-1	400												
Commonwealth Edison																
Will County 1	-1	167											+1	167		
Delmarva Power																
Delaware City 1,2,& 3			+1	180	-1	180										
Eastern Kentucky Power																
Spurlock 2					+1	500					-1	500				
General Public Utilities																
Coho 1											+1	800			+1	800
Seward 7											+1	800			+1	800

(continued)

APPENDIX C (continued)

Period Company Station, unit	Operational		Under construction		Contract awarded		Letter of intent		Requesting/ evaluating bids		Considering		Terminated[a]		Total	
	No.	MW	No.	MW	No.	MW	No.	MW	No.	MW	No.	MW	No.	MW	No.	MW
Gulf Power																
Sholz 1B & 2B	+1	23													+1	23
Hoosier Energy																
Merom 1			+1	490					-1	490						
Merom 2			+1	490					-1	490						
Indianapolis Power and Light																
Petersburg 3	+1	530	-1	530												
Petersburg 4			+1	530							-1	530				
Kansas Power & Light																
Jeffrey 1	+1	680	-1	680												
Lakeland Utility																
McIntosh 3					+1	350									+1	350
Louisville Gas & Electric																
Cane Run 5	+1	183	-1	183												
Mill Creek 1			+1	330							-1	330				
Mill Creek 2					+1	330					-1	330				
Mill Creek 3	+1	425	-1	425												
Mill Creek 4			+1	495	-1	495										
Minnesota Power & LIght																
Clay Boswell 4			+1	500			-1	500								
Minnesota Power																
M.R. Young 2	+1	450	-1	450												

(continued)

APPENDIX C (continued)

Period Company Station, unit	Operational		Under construction		Contract awarded		Letter of intent		Requesting/ evaluating bids		Considering		Terminated[a]		Total	
	No.	MW	No.	MW	No.	MW	No.	MW	No.	MW	No.	MW	No.	MW	No.	MW
Nevada Power																
Reid Gardner 4							-1	250			+1	250			+1	250
New England Electric																
Brayton Point 3											-1	650			-1	650
Otter Tail Power																
Coyote 1			+1	400							-1	400				
Pacific Gas & Electric																
Fossil 1											+1	800			+1	800
Fossil 2											+1	800			+1	800
Pacific Power & Light																
Jim Bridger 4			+1	509	-1	509										
Pennsylvania Power																
Bruce Mawnsfield 3			+1	825	-1	825										
Potomac Electric & Power																
Dickerson 1											-1	190			-1	190
Dickerson 2											-1	190			-1	190
Public Service of Indiana																
Gibson 3									-1	650					-1	650
Gibson 4									-1	650					-1	650
Gibson 5									+1	650					+1	650
Public Service of New Mexico																
San Juan 1	+1	314	-1	375												
San Juan 2	+1	306	-1	306												
San Juan 3					+1	468	-1	468								
San Juan 4					+1	472					-1	472				

(continued)

APPENDIX C (continued)

Period Company Station, unit	Operational		Under construction		Contract awarded		Letter of intent		Requesting/ evaluating bids		Considering		Terminated[a]		Total	
	No.	MW	No.	MW	No.	MW	No.	MW	No.	MW	No.	MW	No.	MW	No.	MW
Salt River Project																
Coronado 1			+1	350	-1	350										
Coronado 2			+1	350	-1	350										
Seminole Electric																
Seminole 1											+1	600			+1	600
South Cardine Public Service																
Winyah 3					+1	300			-1	300						
Southern Illinois Power																
Marion 5											+1	300			+1	300
Southern Indiana Gas & Electric																
A.B. Brown 1			+1	250	-1	250										
Southern Mississippi Electric																
R.D. Morrow 1	+1	180	-1	180												
Southerwestern Electric Power																
Perkey 1					+1	720									+1	720
Springfield Water, Light and Power																
Dullman 3					+1	190					-1	190			+1	190
Tampa Electric																
Big Bend 4											+1	450			+1	450

(continued)

APPENDIX C (continued)

Period Company Station, unit	Operational		Under construction		Contract awarded		Letter of intent		Requesting/ evaluating bids		Considering		Terminated[a]		Total	
	No.	MW	No.	MW	No.	MW	No.	MW	No.	MW	No.	MW	No.	MW	No.	MW
Tennessee Valley Authority																
Johnsonville 1			+1	600											+1	600
Paradise 1									+1	650					+1	650
Paradise 2									+1	650					+1	650
Widows Creek 7			+1	575							-1	575				
Texas Power & Light																
Sandow 5					+1	545			-1	545						
Texas Utilities																
Forest Grove 1									+1	750	-1	750				
Martin Lake 1	+1	793	-1	793												
Martin Lake 2	+1	793	-1	793												
Martin Lake 3			+1	793	-1	793										
Monticello 3	+1	750	-1	750												
United Power Association																
Coal Creek 1			+1	545	-1	545										
Coal Creek 2			+1	545	-1	545										
Utah Power & Light																
Emery 2					+1	400									+1	400
Huntington 1	+1	415	-1	415												
Wisconsin Power & Light																
Columbia 2					+1	527	-1	527								
October 31, 1978	46	16,054	39	16,728	23	12,450	1	240	6	3,650	28	12,610	17	1,555	143	61,732

[a] Terminated category includes prototype or demonstration systems that operated for a limited period of time. A number of these systems are still in service, removing primarily particulates. The units in this category are not included in the total category.

TECHNICAL REPORT DATA
(Please read Instructions on the reverse before completing)

1. REPORT NO. EPA-450/3-79-001	2.	3. RECIPIENT'S ACCESSION NO.
4. TITLE AND SUBTITLE Electric Utility Steam Generating Units Flue Gas Desulfurization Capabilities As of October 1978		5. REPORT DATE January 1979
		6. PERFORMING ORGANIZATION CODE
7. AUTHOR(S) B.A. Laseke, Jr., M.T. Melia, M.T. Smith & T.J. Koger		8. PERFORMING ORGANIZATION REPORT NO.
9. PERFORMING ORGANIZATION NAME AND ADDRESS PEDCo Environmental, Inc. 11499 Chester Road Cincinnati, Ohio 45246		10. PROGRAM ELEMENT NO.
		11. CONTRACT/GRANT NO. 68-02-2811
12. SPONSORING AGENCY NAME AND ADDRESS Deputy Assistant Administrator for Air Quality Planning and Standards, Office of Air, Noise and Radiation U.S. Environmental Protection Agency Research Triangle Park, N.C. 27711		13. TYPE OF REPORT AND PERIOD COVERED Final
		14. SPONSORING AGENCY CODE EPA/200/04
15. SUPPLEMENTARY NOTES		

16. ABSTRACT

This study updates the previously published final report, "Flue Gas Desulfurization System Capabilities for Coal-Fired Steam Generators," EPA-600/7-78-032b published in March 1978. This assessment was made by reviewing the changes and developments in the technology since the preparation of the March 1978 report. A substantial increase in the number and capacity of operational FGD systems, plus the additional operational experience obtained by previously identified operational systems, have resulted in a substantial increase in the amount of design and performance information. Most notably, these include dependability (availability operability, reliability, and utilization) data, removal efficiency data (sulfur dioxide and particulate), operating problem and solution data, results from various research, development, and demonstration programs, and process and design innovations for new systems. Virtually all of the FGD operating experience gained to date has been with the wet-phase, nonregenerable, lime/limestone processes. As a direct result of this previous experience, the systems committed for operation within the next 3 to 5 years also show an overwhelming preference for lime/limestone processes. Analysis of the current status of the technology indicates that the design and operating experience gained with the first and second generation FGD systems has resulted in improved design and operation of subsequent installations. Because FGD systems that are being engineered and/or erected will incorporate many or all of these design innovations, even better performance can be expected without substantial cost increase.

17. KEY WORDS AND DOCUMENT ANALYSIS

a. DESCRIPTORS	b. IDENTIFIERS/OPEN ENDED TERMS	c. COSATI Field/Group
Electric Power Generation Reliability Control Equipment Sulfur Dioxide		13 B

18. DISTRIBUTION STATEMENT Unlimited	19. SECURITY CLASS *(This Report)* Unclassified	21. NO. OF PAGES 451
	20. SECURITY CLASS *(This page)* Unclassified	22. PRICE

EPA Form 2220-1 (Rev. 4-77) PREVIOUS EDITION IS OBSOLETE