United States
Environmental Protection
Agency

Office of Air Quality
Planning and Standards
Research Triangle Park NC 27711

EPA-450/3-79-018
April 1979

Air

EPA

Evaluation of Vapor Leaks and Development of Monitoring Procedures for Gasoline Tank Trucks and Vapor Piping

EPA-450/3-79-018

Evaluation of Vapor Leaks and Development of Monitoring Procedures for Gasoline Tank Trucks and Vapor Piping

by

Robert L. Norton

Pacific Environmental Services, Inc.
1930 14th Street
Santa Monica, California 90404

Contract No. 68-02-2606
Task No. 11

EPA Project Officers: Nancy McLaughlin and Stephen A. Shedd

Prepared for

U.S. ENVIRONMENTAL PROTECTION AGENCY
Office of Air, Noise, and Radiation
Office of Air Quality Planning and Standards
Research Triangle Park, North Carolina 27711

April 1979

This report is issued by the Environmental Protection Agency to report technical data of interest to a limited number of readers. Copies are available free of charge to Federal employees, current contractors and grantees, and nonprofit organizations - in limited quantities - from the Library Services Office (MD-35), U.S. Environmental Protection Agency, Research Triangle Park, North Carolina 27711; or for a nominal fee, from the National Technical Information Service, 5285 Port Royal Road, Springfield, Virginia 22161.

This report was furnished to the Environmental Protection Agency by Pacific Environmental Services, Inc., 1930 14th Street, Santa Monica, California 90404, in fulfillment of Contract No. 68-02-2606, Task No. 11. The contents of this report are reproduced herein as received from Pacific Environmental Services, Inc. The opinions, findings, and conclusions expressed are those of the author and not necessarily those of the Environmental Protection Agency. Mention of company or product names is not to be considered as an endorsement by the Environmental Protection Agency.

Publication No. EPA-450/3-79-018

TABLE OF CONTENTS

Section		Page
1.0	INTRODUCTION	1-1
2.0	HYDROCARBON VAPOR LEAKAGE	2-1
2.1	Sources of Hydrocarbon Leakage	2-1
2.1.1	Tank Truck	2-1
2.1.2	Bulk Plants and Terminals	2-4
2.1.3	Service Stations	2-6
2.2	Potential and Controlled Emissions	2-7
2.3	Available Equipment to Control Emissions	2-7
2.3.1	Tank Truck Dome Covers and P-V Vents	2-7
2.3.2	Tank Truck Vapor Collection Piping and Internal Vents	2-11
2.3.3	Vapor Transfer Piping	2-13
2.3.4	Vapor Transfer Couplers	2-13
2.3.5	Storage Tank Pressure-Vacuum Relief Vents	2-14
2.4	Operating and Maintenance Procedures	2-15
2.4.1	Dome Covers and P-V Vents	2-15
2.4.2	Vapor Collection Piping and Internal Vents	2-18
2.4.3	Vapor Transfer Piping	2-18
2.4.4	Vapor Transfer Couplers	2-19
2.4.5	Storage Tank Pressure-Vacuum Relief Vents	2-20
2.4.6	Miscellaneous Emission Sources	2-20
2.5	Costs to Maintain Vapor Containing Equipment	2-21
2.5.1	Tank Trucks	2-21
2.5.2	Other Emission Sources	2-23
3.0	DEVELOPMENT OF MONITORING PROCEDURE	3-1
3.1	Test Methods	3-1
3.1.1	Vapor To Liquid Volume Determination (V/L)	3-1
3.1.2	Explosimeter	3-2
3.1.3	Sonic Detector	3-2
3.1.4	San Diego "Bag" Test	3-2
3.1.5	Pressure-Vacuum Test (CARB)	3-3
3.1.6	Bubble Indication Method	3-4
3.1.7	Quick Leak Decay	3-4
3.1.8	Volume Leakage	3-5

TABLE OF CONTENTS (Concluded)

Section		Page
3.2	Evaluation of Test Procedures	3-5
3.2.1	Pressure-Vacuum Test (CARB)	3-10
3.2.2	Quick Leak Decay Method	3-16
3.2.3	Volume Leakage	3-20
3.2.4.	V/L Ratio Method	3-24
3.2.5	Explosimeter Method	3-33
3.2.6	Sonic Detector	3-40
3.2.7	Bubble Indication Method	3-41
3.2.8	San Diego "Bag" Method	3-41
3.3	Pass/Fail Criteria	3-43
4.0	CONCLUSIONS	4-1
4.1	Vapor Containing Equipment and Maintenance	4-1
4.2	Costs of Maintaining Vapor Tight Conditions	4-1
4.3	Monitoring Procedures	4-2
4.4	Pass/Fail Criteria	4-3
APPENDIX A —	Suggested Monthly Visual Maintenance Inspection Checklist	A-1
APPENDIX B —	Actual Maintenance Performed on Delivery Tanks During Field Test Phase	B-1
APPENDIX C —	Suggested Enforcement Inspection Checklist	C-1

LIST OF ILLUSTRATIONS

Figure		Page
2-1	Vapor Recovery System Using Overturn Rail	2-3
2-2	C-B Dome Assembly	2-8
2-3	Tiona Dome Cover	2-9
2-4	Typical Vent Cover Configuration	2-12
3-1	Frequency of Occurrences of Back Pressure During Loading Operations	3-11
3-2	Typical CARB Pressure Test Results at Bottom Loading Terminal	3-14
3-3	Typical CARB Pressure Test Results at Top Loading Terminal	3-15
3-4	Laboratory Test Results for CARB Pressure Test	3-17
3-5	Quick Leak Decay Test Apparatus	3-19
3-6	Typical Pressure Versus Time Curves for Laboratory Tests of Quick Leak Decay Method	3-21
3-7	Volume Leakage Versus Pressure Decay for Bottom Loaded Tanks at Various Pressures	3-22
3-8	Volume Leakage Versus Pressure Decay Rate for Top Loading Tanks at Various Pressures	3-23
3-9	Frequency Distribution of V/L Ratio for Tanks That Pass Certification Tests and Tanks That Fail Certification Tests	3-34

LIST OF TABLES

Table		Page
2-1	Costs for Maintaining Trucks in Leak Tight Conditions	2-22
2-2	Total Annual Maintenance Costs for Product Delivery Equipment	2-24
3-1	Test Fleet Physical Data	3-7
3-2	Tank Tightness History	3-13
3-3	Correlation Coefficients for Volume Leakage Results With Respect to CARB Test Results	3-25
3-4	V/L Results for Top Loading	3-26
3-5	V/L Results for Bottom Loading	3-29
3-6	Correlation Factors (r) for V/L Ratios and Tank Loading Backpressure	3-35
3-7	Percent of Compartments With Leaks at Specific Locations	3-37
3-8	Occurrence of Hydrocarbon Leakage at Various Explosimeter Levels	3-38
3-9	Percent of Tanks Identified Correctly at Varying LEL Levels Using the Explosimeter Method	3-39
3-10	Volume Leakage Rate Required for Various Containment Requirements	3-45

1.0 INTRODUCTION

In the prevention of hydrocarbon emissions during the transfer of gasoline, hydrocarbon vapor recovery systems have been installed. These systems have been developed to contain hydrocarbon emissions and to transfer the vapors through piping systems either to the delivery tank during gasoline deliveries, or to the storage tanks or to the vapor processor during the loading of the delivery vehicle. The effectiveness of these vapor recovery systems is dependent upon the absence of leaks in the vapor containing equipment and assorted piping.

As a task under EPA Contract No. 68-02-2606, Pacific Environmental Services, Inc. (PES) conducted a study to define the leakage areas, the equipment necessary to contain the vapors, and the costs of maintaining the vapor containing equipment in a leak tight condition. The study also aimed at developing a monitoring procedure which would be a quick, low cost technique. This procedure would be used as an enforcement tool to determine if the vapor transfer system was operating without leaks as defined by some pass/fail criteria.

To determine the availability and the cost of maintaining the necessary vapor containing equipment, numerous equipment manufacturers and equipment operators were contacted. Identification of leakage areas were performed by observing delivery tank loadings. Maintenance costs were obtained by observing actual tank maintenance procedures conducted by several tank truck operators.

To determine an appropriate field monitoring procedure, a field test program of candidate methods was developed by PES. The field test program, conducted by another contractor, was supervised by both PES and EPA personnel. Tests were conducted in the Los Angeles, California area because truck fleet operators in California are required to maintain their trucks in a leak tight condition as

defined by the California Air Resources Board (CARB) certification criteria. Maintenance and equipment specifications were also obtained mostly from California sources because of the leak tight requirements. Tests were conducted at both bottom and top loading terminals with a total of over 150 tank loadings monitored.

2.0 HYDROCARBON VAPOR LEAKAGE

2.1 SOURCES OF HYDROCARBON LEAKAGE

2.1.1 TANK TRUCK

Sources of hydrocarbon leakage from truck delivery tanks include dome covers, pressure-vacuum vents, and vapor collection piping and vents. Smaller instances of leakage occur at tank welds, liquid and vapor transfer hoses, overfill sensors, and vapor couplers.

2.1.1.1 Dome Covers and P-V Vents

Dome covers consist of a series of openings, clamps and seals each of which is a potential hydrocarbon vapor leakage point. The first potential source is the seal where the dome assembly itself attaches to the truck tank. A gasket material is placed between the dome base ring and the tank welding ring, and the dome cover clamped to the tanks. Hydrocarbon leakage can occur at this seal if dirt or foreign material becomes lodged in the interface, if the gasket material becomes cracked or worn, or if the dome base ring becomes warped or damaged.

Another source of hydrocarbon leakage from the dome cover is at the seal between the dome lid which covers the hatch opening. This seal can be easily damaged if foreign material lodges in the interface, especially if the lid is opened or closed regularly as in top loading. The dome lid is also spring loaded and acts as a secondary pressure relief vent normally set to open if the tank pressure reaches 3 psi. The hatch cover can become warped or damaged and leakage can occur.

Fugitive hydrocarbon emissions can also occur at the pressure-vacuum (P-V) vents which are normally installed in the dome lid. The pressure side of the vent is commonly set to be full open at 1 psi and the vacuum side of the vent is commonly full open at

6 ounces vacuum. These vents are installed primarily for safety purposes to allow venting or inbreathing into the tank to offset pressure changes caused by temperature variations. These vents also act as a vapor containing device to reduce emissions of hydrocarbons from the compartment vapor space. Emissions or leaks may occur if the P-V vent is not installed or is not maintained properly. The valve seat may become dirty or damaged which may cause the valve to seal improperly. The valve actuating device, such as a springloaded valve, may become damaged also allowing improper sealing and causing hydrocarbon leakage.

2.1.1.2 Vapor Collection Piping and Internal Vents

For those truck delivery tanks that have vapor recovery installed, hydrocarbons can leak from the vapor collection and piping systems. Normally, each compartment has a vent valve which is opened when that compartment is being loaded or unloaded. This vent allows vapors to be removed from or returned to the compartment through piping into the vapor recovery system. The compartment vent valve is covered either with a rubber boot assembly or metal bolted or welded cover to contain the vapors in the vapor transfer system. The vapor return line can be either rubber hoses or metal pipe placed on top of the tank or incorporated into the overturn rail or any combination of these. Figure 2-1 illustrates one of these configurations. The vapor return line, which is manifolded to each compartment, will have joints or connectors in the piping for each compartment.

Hydrocarbon vapors can leak from the vent valve cover due to tears in the rubber boot, leaks in gaskets from bolted covers or faulty welds from welded covers. Leaks can occur in the vapor line connectors from poor seals or clamping mechanisms with the rubber hoses or faulty welds or seals with metal piping. Hydrocarbon emissions may also be detected at the vapor return coupler. This would be caused by vapors leaking out through the vapor transfer lines due to improperly sealing internal valves.

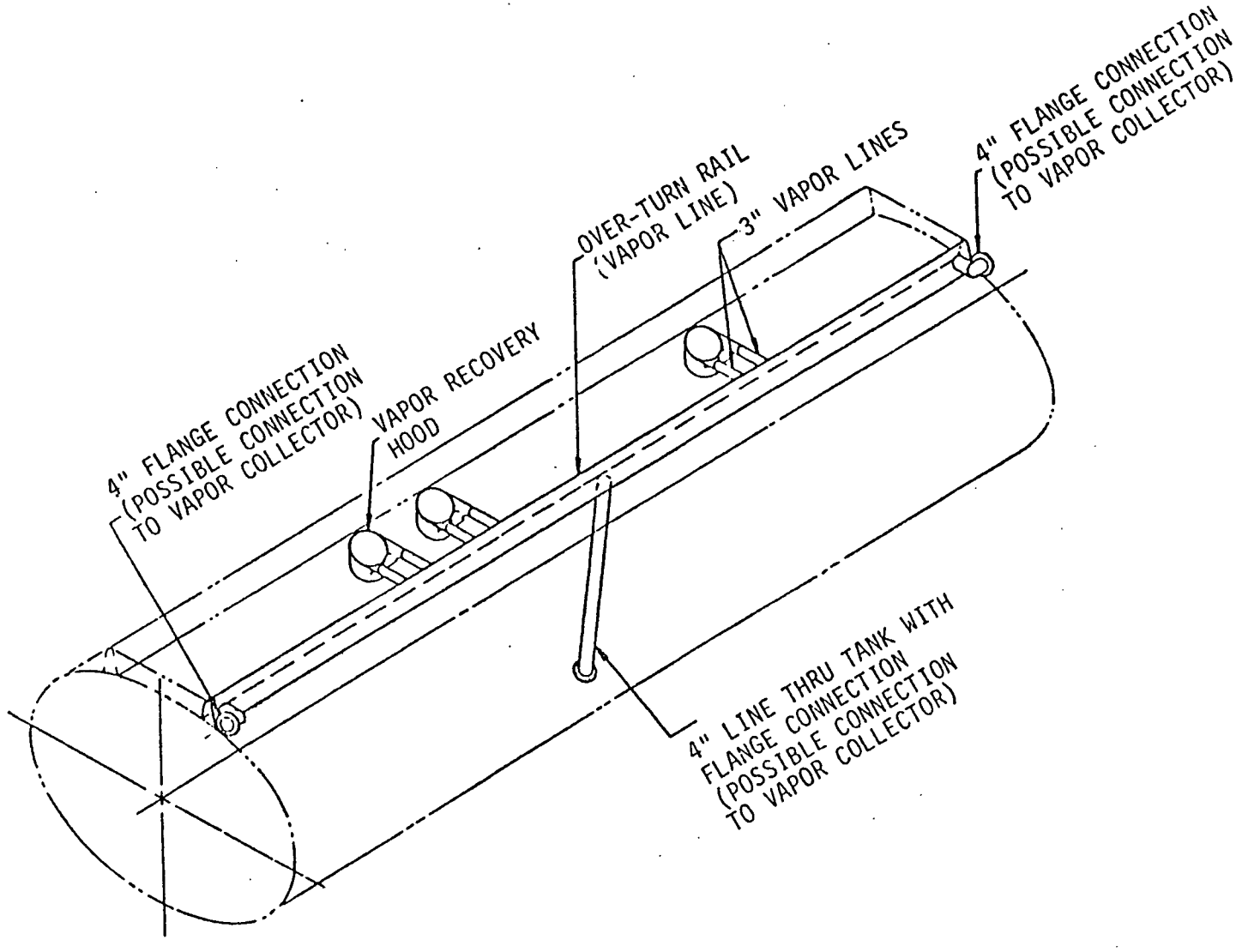

Figure 2-1. Vapor Recovery System Using Overturn Rail
(Courtesy of The Heil Company)

2.1.1.3 Liquid and Vapor Transfer Hoses

Leaks can occur from liquid and vapor transfer hoses and from their respective couplers. Hoses can become torn, worn, or cracked to produce hydrocarbon vapor leaks. Fugitive hydrocarbons can occur from vapor coupler connections if these are not coupled or closed properly. Coupler gasket material can also be worn or damaged causing a poor seal. If dry break or vapor tight couplers are used, the valve seat may become worn or foreign matter may become lodged in the seal causing hydrocarbon vapors to leak to the atmosphere.

2.1.1.4 Miscellaneous Emission Sources

Other sources of leakage from truck delivery tanks are possible but occur considerably less frequently than those already discussed. Leakage can occur from flaws in the tank shell, improperly welded seams, or improperly installed or loosened overfill protection sensors.

2.1.2 BULK PLANTS AND TERMINALS

Various leakage of hydrocarbon vapors from bulk plants and terminals can occur from vapor couplers and hoses corresponding to the vapor recovery system, top loading connectors (if applicable), vapor piping to storage tanks and pressure relief vents on fixed roof storage tanks or sump tanks (if applicable).

2.1.2.1 Vapor Piping to Storage Tanks and Processors

Vapor recovery piping can be installed at bulk plants for both incoming loads to the storage tank and for vapor control at the loading racks. Vapor recovery piping installed at terminals will run from the vapor processors to the loading rack. This piping is usually above ground and is normally flanged or threaded metal

pipe. Hydrocarbon vapor leaks can occur at piping joints or connections due to improper installation, faulty flange gaskets or accidental damage.

2.1.2.2 Vapor Couplers and Hoses

As discussed in the delivery tank section, losses can occur from damaged or worn transfer hoses or improperly connected or damaged vapor transfer couplers. Bottom loading coupler losses can occur from worn or contaminated vapor tight valve seats or from worn gaskets.

2.1.2.3 Top Loading Vapor Connectors

Vapor leakage from top loading collection and loading arms can occur from movable joints or swivels. The arms can be either pneumatically operated or manually swiveled as in smaller bulk plant type top loading operations. Even with vapor recovery loading arms, recent test data has shown that hydrocarbons can escape during over 95 percent of the loading operations.[1] Liquid spillage and leaking joints, such as swivels and flange gaskets, account for a number of hydrocarbon vapor sources. Hydrocarbons can also escape from the loading arm-hatch opening interface. Test data show that this can be the most significant source of leakage from the top loading operations.[2]

2.1.2.4 Storage Tank Pressure Relief Vents

At either bulk plants or terminals where fixed roof tanks or sump tanks are employed, pressure-vacuum vents are used to control vapor losses from the storage tanks. These valves are similar in concept to those discussed in Section 2.1.1.1. The valves can be either spring loaded or weighted to open at the desired internal pressure. Dirt or other debris can become lodged in the valve seat causing it to seat poorly and become a hydrocarbon leak source.

The spring or weights system may get out of allignment and not allow the valve to return to its seat properly, thereby causing leaks.

2.1.3 SERVICE STATIONS

Fugitive hydrocarbon emissions can occur during service station gasoline deliveries at the delivery and vapor transfer couplers, at the underground tank vent, and at the underground vapor piping.

2.1.3.1 Vapor Piping

The vapor piping at service stations is almost exclusively underground and therefore should not be a significant source of hydrocarbons. However, if improper installation does occur vapors can escape from the piping and reach the atmosphere.[3]

2.1.3.2 Underground Tank Vent

Hydrocarbon vapors can be emitted from the underground tank vent during unloading of the gasoline. This could be caused by restrictions in the vapor return line, by not connecting the vapor line during the delivery, or by temperature differences between the gasoline being unloaded and that which is present in the underground tank.

2.1.3.3 Vapor and Liquid Transfer Couplers

Leakage can occur due to damaged or improperly attached vapor couplers as discussed in previous sections. Damaged couplers may not allow the sealing mechanisms to operate properly and, if not coupled tightly, hydrocarbon vapors can be emitted.

2.2 POTENTIAL AND CONTROLLED EMISSIONS

Quantifying a leakage source is difficult since the size of the leak and the corresponding leakage rate can vary significantly. The leakage rate is proportionate to the equivalent orifice size of the leak opening and the tank pressure.[4] All of the leakage sources prescribed in Section 2.1 have the potential to be large leaks; however, some of the leak sources are normally more predominant than others.

Leakage of hydrocarbons from hatch covers, hatch base rings and pressure vacuum vents are the sources where hydrocarbon vapors most often occur. These uncontrolled leakage rates have the potential to exceed 70 percent of the vapor transferred.[5] Under controlled conditions these sources should not leak in excess of 1 percent of the volume of vapor transferred. This is based on the CARB tank truck pressure loss criteria which, when calculated, does not allow the delivery tank to leak greater than 1 percent of the volume of vapors transferred (99 percent containment).

The other sources discussed, such as the vapor piping, couplers and storage tank vents also have the potential for large leaks depending upon the size of the leakage area. Vapor losses from properly installed and maintained piping and couplers should be eliminated. Vapor losses from P-V vents, when the tank pressure is below the venting level, can also be eliminated with properly installed and maintained equipment.

2.3 AVAILABLE EQUIPMENT TO CONTROL EMISSIONS

2.3.1 TANK TRUCK DOME COVERS AND P-V VENTS

In California where leakage must be contained within the limits specified in the certification criteria, only two firms manufacture hatch covers which can meet these requirements. These domes are supplied by C-B Equipment, Inc., Lynwood, California and

Tiona-Betts, Inc., Warren, Pennsylvania. From interviewing tank truck operators, conflicting opinions were obtained on a preference of either of the hatch covers. The Tiona dome base ring is made from a flat plate while the C-B dome base ring is cast and has support ridges (see Figures 2-2 and 2-3). This added support makes the C-B dome less apt to succumb to bends or warpage. However, the rigidity of the C-B dome does not allow the type of maintenance that can be performed on the Tiona dome (see Section 2.4). The flat plate of the Tiona base ring can be worked and manipulated to retain vapor tightness, whereas the C-B base ring, if damaged, must be replaced. This can be significant when considering the cost of the dome covers (Tiona approximately $80; C-B dome approximately $120). The dome lids themselves are somewhat similar (although the C-B cover has reinforced ribs) and both use a spring loaded closure mechanism for containing vapors.

The pressure-vacuum vents are built into the dome lids in both cases. The Tiona dome incorporates a separate piston-type valve for both the pressure and vacuum release vents. These valves are both spring loaded pistons which will open when the actuation pressure is reached. The C-B dome uses a valve which can seat in either the pressure relief direction or the vacuum release direction. The C-B vent does not use pistons but uses spring loaded discs. One spring loaded disc constitutes the pressure vent and another spring loaded disc constitutes the vacuum vent. These discs will then move as the pressure reaches the critical point. This vent system is easier to repair and clean than the Tiona system and is less susceptible to leakage caused by debris because there are no pistons. The piston system has more tendency to leak due to tight or sticky piston movement caused by dirt or other foreign material becoming lodged in the piston sleeves. A ball is inserted in both the C-B and Tiona vents to act as a shutoff valve in case the tank is rolled over. This prevents the liquid from escaping from its container. One operator has devised a conversion kit so that the C-B vent can be installed on the Tiona dome.

Figure 2-2. C-B Dome Assembly
(Courtesy C-B Equipment, Lynwood, California)

SYM.	PART NO.	REQ.	DESCRIPTION
1	1002	1	WELDING RING
2	7456	1	DOME BASE RING
3	1017	1	GASKET
4	7457	1	DOME CAP
5	7458	1	DOME LOCKING BAR
6	7459	2	SHAFT ASSEMBLY
7	7460	2	EXCESS PRESS SPRING
8	7461	2	SLEEVE
9	7462	2	LOCKING BAR CATCH
10	7463	4	DOME STUD
11	7464	4	DOME CLAMP LUG
12	7465	1	LOCK HANDLE
13	7466	1	RETAINING BOLT
14	7467	2	HINGE BOLT
15	7468	1	SAFETY LATCH BOLT & SPRING
16	7469	1	SAFETY LATCH
17	7470	1	DOME CAP GASKET
18	7471	1	VACUUM VALVE DISC
19	7472	2	VACUUM VALVE STUD-NUT-GUIDE
20	7473	2	VACUUM VALVE SPRING
21	7474	1	PRESSURE VALVE DISC
22	7475	1	PRESSURE VALVE BALL
23	7476	1	PRESSURE VALVE BALL RET.
24	7477	2	PRESSURE VALVE BOLT ASS'Y
25	7478	2	PRESSURE VALVE SPRING
26	204	2	O-RING
27	206	4	O-RING
28	7481	4	DOME CLAMP ASSEMBLY
29	7482	4	DOME CLAMP LUG

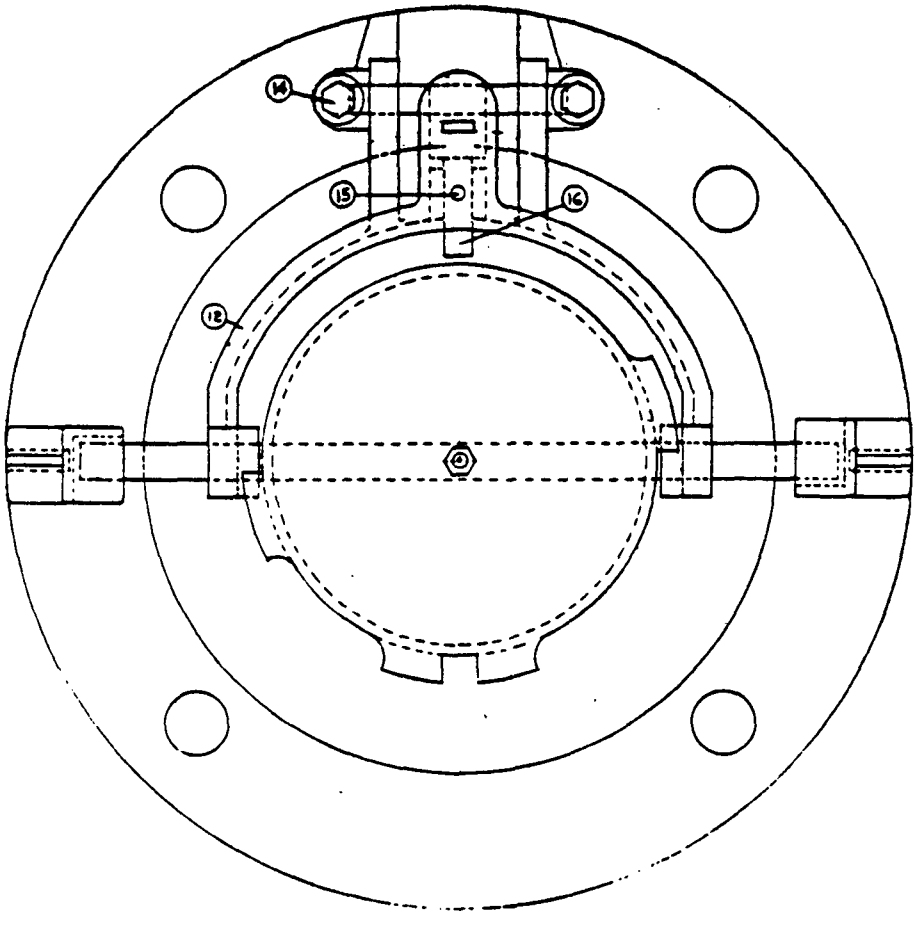

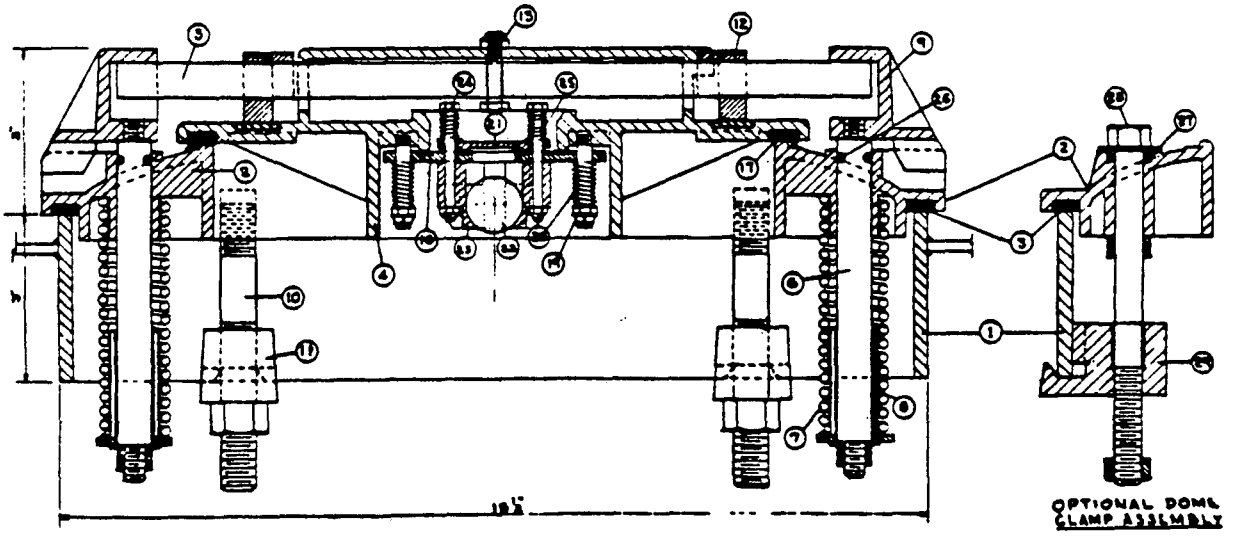

4-A

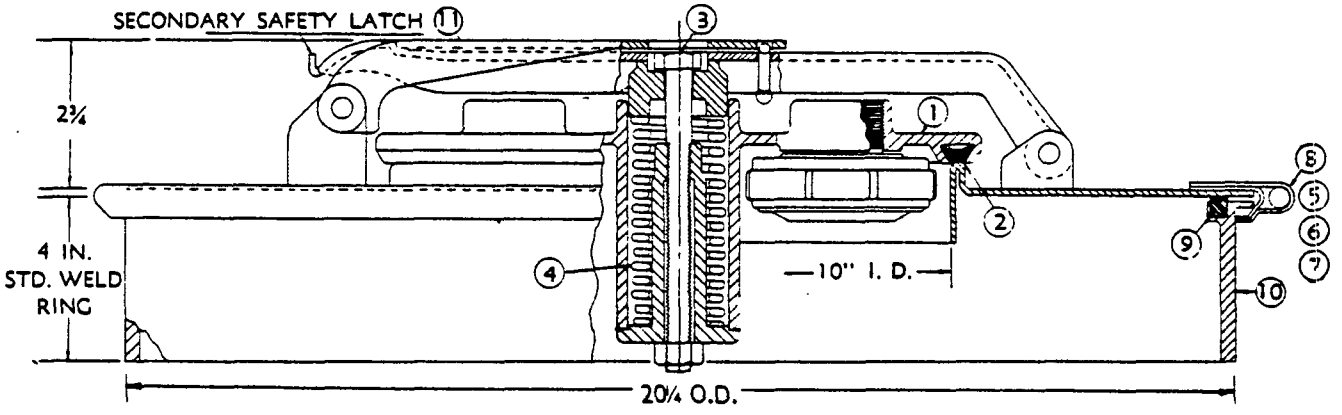

No.	Description	Material	Part No.
1	Fill Cover	Aluminum	8046-AL
2	Fill Gasket	Buna-N	3119-BN
		Viton	3119-VT
3	Bolt - Spring	Steel Cd. Pt.	3139-CP
4	Spring	Van. Steel	3129-CP
5	Bolt - Clamp	Steel Cd. Pt.	3029-CP
		Stls 304	3029-SL
6	Nut - Clamp	Brass	3030-BR
		Stls 304	3030-SL
7	Washer - Clamp	Steel	3031-MS
		Stls 304	3031-SL
8	Clamping Ring	Steel	3036-MS
		Steel Cd. Pt.	3036-CP
		Stls 304	3036-SL

No.	Description	Symbol	Material	Part No.
9	Manhole Gasket Channel Type	C	Cork-Buna-N	3175-CB
		B	Buna-N	3175-BN
		A	Asbestos	3175-AS
		E	Teflon-Asb.	3175-AT
10	Manhole Collar (Channel Type)	F	Steel	3176-MS
		H	¼ Aluminum	3176-AE
		J	Stls 304	3176-SL
		K	Stls 316	3176-SS
11	Closure Assem. (Includes Cover Plate, Strong Back, Latch, Hinge Lugs & Pins)	S	Steel	6083-MS
		B	Steel Cd. Pt.	6083-CP
		G	Stls 304*	6083-SP
		C	Stls 304	6083-SL
		D	Stls 316	6083-SS

*Latch and Strongback Steel Cadmium Plated.

Figure 2-3. Tiona Dome Cover
(Courtesy of Tiona-Betts, Warren, Pennsylvania)

Emissions from poorly installed or maintained dome covers or pressure-vacuum vents can be sizable. However, if proper domes are installed and maintained correctly, emissions can be reduced significantly. The CARB certification requirements, which require leak-tight trucks, illustrates that emissions from domes and pressure-vacuum vents can be controlled and trucks maintained to reduce hydrocarbon leakage.

2.3.2 TANK TRUCK VAPOR COLLECTION PIPING AND INTERNAL VENTS

Leakage can occur around the internal vent covers and vapor piping joints. The internal vent allows vapors to enter the vapor return system when loading or unloading liquid into the compartment and is pneumatically or mechanically coupled with the compartment loading. The vent opens into a covered area which in turn is plumbed into the vapor return piping system. These vent covers are made of either metal or rubber and are either welded, bolted, or clamped into position over the vent valve (see Figure 2-4). The vapor collection or return piping can also be made of metal or rubber and can take several configurations. Separate piping may be used for the vapor return or use may be made of the overturn rail. If separate piping is used, the piping could be of rubber or metal pipe, manifolding the exhausts from each compartment into the main exhaust line. If metal piping is used, joints could be welded or flanged with gasket material. If the vapor line is rubber, band clamps are used most often at the joints to maintain tightness. If the overturn rail is used as the vapor return line, piping is run from the vent valve to the overturn rail and can again be welded pipe or rubber hose. Joints could also be welded, flanged, or clamped. Welded pipe and vent valve covers provide a better vapor tight transfer system than the rubber boot or rubber hose transfer

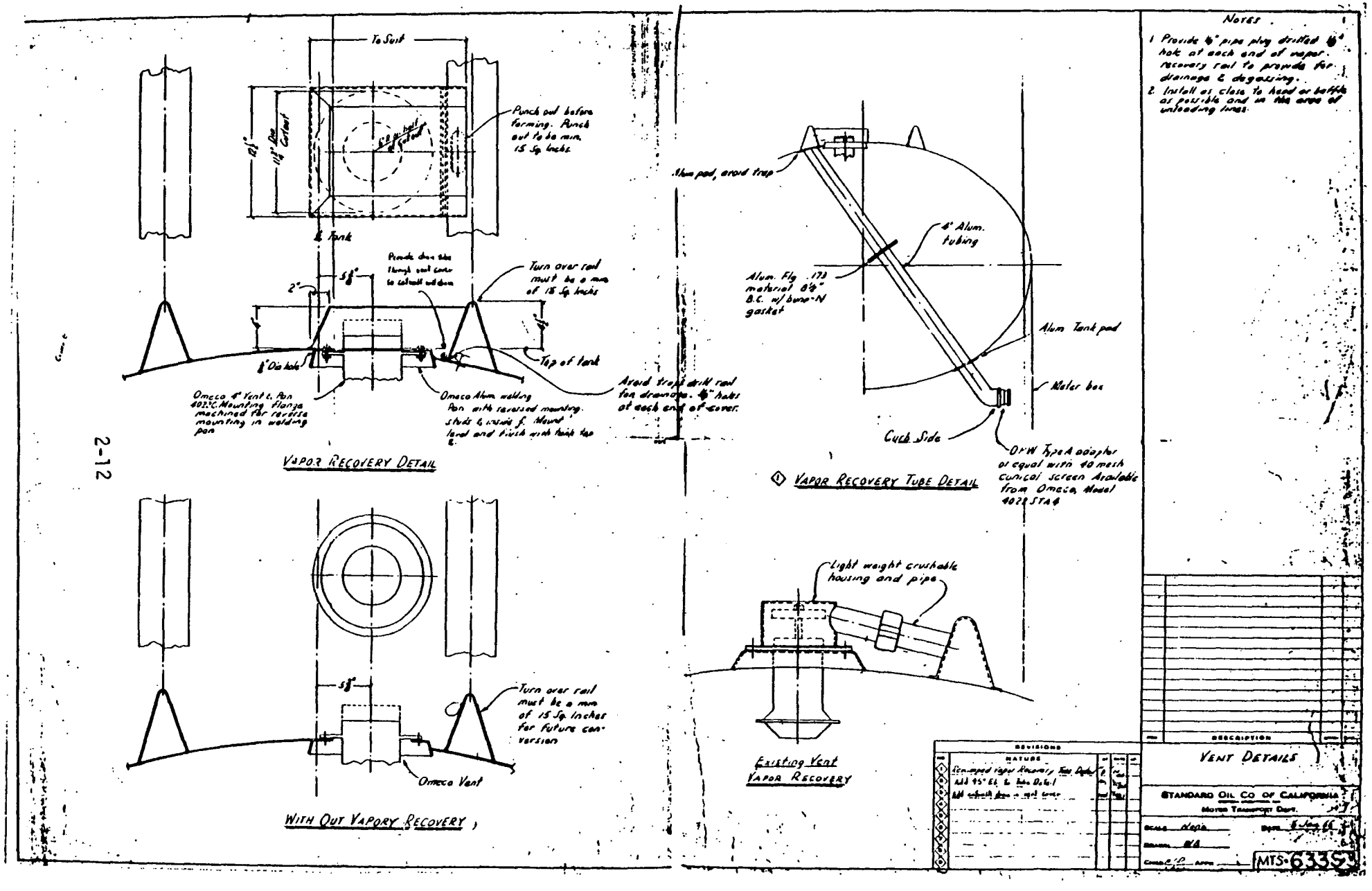

Figure 2-4. Typical Vent Cover Configuration

systems. Leaks are less frequent when using welded piping and covers and replacement equipment losses are greatly reduced. However, installation costs for the welded system would be higher than that of the rubber system.

With properly installed welded vent covers and piping, emissions should be eliminated from these areas with the exception of damage caused by accidents. Proper installation, and a proper maintenance program should reduce leakage from flanged and rubber clamped vapor hoses significantly. These last two methods do require a conscientious maintenance plan to maintain the system in proper working order.

2.3.3 VAPOR TRANSFER PIPING

Vapor transfer piping includes flexible vapor hoses for the tank truck loading rack, and all vapor transfer piping at terminals, bulk plants, and service stations. Flexible vapor transfer hoses are made from gasoline resistant rubber and normally are attached to coupling fittings using band clamps. Vapor transfer piping at terminals and bulk plants are normally rigid metal pipe and can be found above or below ground in either welded, threaded, or flanged pipe. Service station piping is almost exclusively underground. Leakage can occur from poorly installed piping, leaking gaskets, loosely applied clamps at the couplers, etc. However, welded or threaded vapor piping, if correctly installed should eliminate hydrocarbon vapor losses. Flanged pipe must be maintained and monitored more frequently because of the gaskets involved at the joints. However, flanged pipe can all but eliminate hydrocarbon leakage if maintained properly.

2.3.4 VAPOR TRANSFER COUPLERS

Vapor transfer couplers for bulk plant, terminal, and service station vapor transfers can take on numerous configurations. The

couplers become leak tight through a compression mechanism incorporating a gasket material chemically resistant to the liquid being transferred. These couplers could include: dry-break couplers or vapor tight spring-loaded couplers for vapor lines at bulk plants, terminals, and service stations; kam-lock type couplers for tank truck vapor connections; coaxial fittings at service station drops. The couplers used are dependent upon the vapor transfer configuration selected. These couplers are readily available from several manufacturers and are similar to liquid transfer couplers which have been used for years. The leakage problems from couplers occur when the gasket becomes worn or damaged or the coupler connectors or body become damaged, not allowing an adequate seal.

If the vapor transfer couplers are in good working order and coupled properly, emissions from the coupler joints should be minimized. Small leaks may be encountered through the vapor hoses or vapor to coupler joints, but these will be very small if the system is maintained properly.

2.3.5 STORAGE TANK PRESSURE-VACUUM RELIEF VENTS

For fixed roof storage tanks, pressure-vacuum vents are installed to relieve positive or negative pressures which exceed their set point. These P-V vents are similar in approach to those discussed in the tank compartment dome cover. The valves can have either separate vent locations or may be designed to have a single vapor outlet. The valves are held closed by either a series of weights or force supplied by a spring. The weights or spring force are designed to be offset by the internal tank pressure and will be full open at the desired pressure setting. Pressure settings on storage tanks are normally 6 ounce pressure and one-half ounce vacuum.

Hydrocarbon vapor emissions cannot be eliminated from these vents since their purpose is to release pressure. However, if the

valve is maintained properly, emissions from the valve when the tank is below the actuation pressure should be minimized.

2.4 OPERATING AND MAINTENANCE PROCEDURES

The equipment manufacturers contacted did not give much information about recommended maintenance beyond the fact that damaged parts should be replaced. However, several of the operators interviewed had devised their own operating or maintenance procedures which are discussed in this section, along with recommended maintenance procedures for maintenance not currently conducted. A visual inspection of the vapor containing equipment is an integral part of the maintenance program. A suggested checklist for a periodic visual inspection of equipment is shown in Appendix A. Actual maintenance performed on truck tanks during the field test phase are outlined in Appendix B.

2.4.1 DOME COVERS AND P-V VENTS

Dome cover maintenance procedures range from visual observation to manual adjustments. Maintenance practices vary greatly between operators from infrequent to monthly inspections. For purposes of this report, California maintenance procedures will be discussed because of the tank tightness requirements and the corresponding maintenance necessary to obtain the required tightness. Common causes for leakage around the domes, as discussed in Section 2.1, can be damaged or warped dome cover-base rings or dome lids, dirty gaskets, or faulty pressure-vacuum vents. Before pressurizing the tank, the dome lids should be visually inspected. The gasket between the dome lid and base ring should be inspected for damage such as tears or cracks. Dirt, or other foreign material, should also be removed from the gasket sealing surface. If the gasket show signs of excessive wear or damage, it should be replaced. The dome lid

itself may be damaged or warped and should be checked for the quality of the seal between the lid and base ring. Several methods can be used, two of which are discussed here. The gasket or seal of the dome lid could be coated with a type of grease or other easily visible material and the dome lid closed, sealed, and then reopened. The inability of the dome lid to close or seal around the entire circumference can then be clearly visible by showing gaps in the indicating material on the mating surface.

The other method suggested by a tank truck operator would be to use a piece of thin paper placed between the dome lid and the base ring with the dome lide closed securely. If the paper can then be moved, the seal is not tight enough and a leak will most likely occur.

The P-V vents should be visually inspected to determine if foreign material is lodged in the valve seats not allowing the valve to seal properly. The vent should also be tested to determine if the spring loaded valve closures are working smoothly without sticking or rubbing. The bolts and/or clamps used to attach the base ring to the tank should also be tested for tightness. If any of these visual techniques indicate the necessity of repair, the maintenance should be performed before proceeding.

The tank should then be pressurized to determine the ability of the tank to maintain pressure. A bubble solution or sonic detector could be used to indicate the presence of leakage points. When these leaks have been found, the maintenance necessary to reduce these leaks to acceptable limits should be performed.

The maintenance required to minimize leakage points identified around the dome cover would include bending or reshaping the dome base ring if possible or replacement of the entire dome cover. If

a leak occurs between the dome lid and base ring, bending or reshaping of the dome base can be done by pounding with hammers or applying leverage to the hatch opening in an attempt to create a good seal at the dome lid. The dome lid itself can be adjusted by tightening the hold down mechanism. However, since the dome lid is a secondary pressure relief vent (normally at 3 psi) there is a limit on this adjustment. If the leak cannot be repaired satisfactorily, the dome cover must be replaced. For leakage around the tank/base ring interface, the bolts or attachment clamps should be tightened. If the leak persists the dome cover should be removed and the gasket inspected and replaced if necessary. The dome cover may have to be reshaped or replaced entirely if damaged to the extent that a good seal cannot be maintained.

Leakage at the P-V vents will require removing the vent from the dome lid and disassembling and cleaning the components. The valve seats should be cleaned and all foreign material removed to ensure a good seal. If the components are damaged they should be replaced. The springs holding the vents closed may need replacing or stretching to return them to their designed holding force. The piston housing, if applicable, should also be cleaned to ensure the piston can move freely without rubbing or sticking. The valve should be then reassembled and installed. If leakage occurs which is still not acceptable, the vent valve should be replaced.

Visual inspection of all dome covers should be performed on a regularly scheduled basis and equipment which needs repair or replacement should be fixed accordingly. This should be performed when the truck is in the shop for normal maintenance. This should not require pressurization of the tank but only replacement of visibly damaged or faulty equipment. Some operators perform visual inspections as often as once every two to three weeks.[6]

2.4.2 VAPOR COLLECTION PIPING AND INTERNAL VENTS

Vent valve covers and vapor piping joints should be visually checked when observing the dome covers. During the visual inspections, bolts in flanged covers should be checked for tightness and rubber boots and hoses should be inspected for tears or cracks. Bolts should be tightened and rubber equipment replaced as required.

These leakage points may be less obvious and pressurization of the delivery tank may be necessary to locate the leak. Bubble solution, sonic detectors or explosimeters can be used to pinpoint the leakage sources. Leaks at the vent valve covers can occur at welded joints, bolted covers, or from rubber covers. The leaks found in welds should be marked and the weld repaired. If a leak persists, the vent cover gasket should be inspected and replaced if excessively cracked or damaged. Rubber covers should be checked for tears or cracks and replaced as needed.

Vapor piping joints should be checked in a similar fashion. Welded joints should be inspected for weld integrity and repaired as needed. Flanged joints should have the bolts tightened and the gasket material replaced as needed. All bolted or clamped vapor piping joints should be checked for tightness. Rubber vapor hoses should be checked for leaks and replaced if worn or cracked. Gasket materials for flanged piping should be replaced if leaks persist after tightening.

2.4.3 VAPOR TRANSFER PIPING

Leakage from vapor transfer piping can occur at piping joints due to worn or deteriorated gasket material, improper installation, or loosened flange clamping mechanisms. The piping, where above ground should be visibly inspected for damage or obvious leakage areas. An explosimeter, sonic detector or bubble indicating solution can be used to find smaller leaks. For

welded pipe the leakage point should be marked and the point repaired or plugged. For flanged pipe, all flange bolts should be checked for tightness and adjusted. If leaks persist at these flanged joints, the gasket material should be replaced. For threaded pipe, if leaks are found at joints the fittings should be disconnected and reassembled using some type of thread sealing compound to ensure a tight fit. If the piping cannot be practically dismantled, the leakage area should be marked and the leak minimized.

Flexible vapor hoses should be checked visually for obvious cracks and tears, and the hose-to-coupler clamp should be checked for tightness. A bubble indicating solution or sonic detector can be used to indicate the location of leaks. However, before replacing this equipment, the hose should be tested with the entire tank truck system since small leaks in the hose can occur and the system may still pass the test (see Section 3.2). If during inspection the hose has excessive wear or damage, it should be replaced.

2.4.4 VAPOR TRANSFER COUPLERS

Vapor transfer couplers should be inspected periodically to ensure their vapor tightness is maintained. The gasket material should be visually inspected and replaced if worn, cracked, or damaged excessively. Vapor tight couplers such as dry breaks or spring loaded connectors should have the valve seat inspected and cleaned to maintain a good tight vapor seal. Coupler clamping mechanisms should be inspected and adjusted as necessary. The coupler interface can be checked for leaks using an explosimeter or bubble indication solution. If leaks persist after maintenance has been performed the coupler unit should be replaced.

2.4.5 STORAGE TANK PRESSURE-VACUUM RELIEF VENTS

As in other pressure-vacuum relief vents, the most common leakage point is around valve seats. Dirt or other foreign debris can become lodged on the valve seat face not allowing the valve to close completely and causing vapors to escape. Valves can also have a problem of reseating improperly once they have opened. The closing disc can get out of alignment resulting in the valve face resting at an angle and not firmly on the valve seat. To assure good valve closure, the valve seats must be periodically checked to remove dirt and debris. The valves should also be inspected to ensure they have reseated properly and that the valve guides are clean and free of obstructions. Because of the potentially large emission source from an open P-V valve, these vents should be checked at least once per week. This should not prove to be an excessive burden since many fixed roof tanks are gaged for liquid level from the top whenever liquid deliveries are made.

2.4.6 MISCELLANEOUS EMISSION SOURCES

This category includes leaks in tank shells, poorly welded seams, damage caused by an accident, and poorly installed or loose overfill protection on tank trucks. These leaks are usually small and therefore hard to detect. However once they are repaired, usually when the tank is first pressure tested, the occurrence of these leak sources decrease significantly. These sources are commonly found using a bubble indication solution while the tank is pressurized. The sources are marked and repaired as necessary. Probability of a leak occuring at other sources is so much higher that these sources are usually the last checked.

2.5 COSTS TO MAINTAIN VAPOR CONTAINING EQUIPMENT

2.5.1 TANK TRUCKS

Costs are presented for maintaining a tank in leak tight condition. These costs include labor and materials for performing the required maintenance to reduce leakage to an acceptable level and labor for performing the CARB certification test.

Costs are given for two degrees of vapor tightness. The first, and more stringent case, comes from San Diego County which allowed a pressure drop of 1 inch of water in 5 minutes. The second case was that required in the remainder of the State of California which allowed, at the time the costs were generated, a pressure drop of 3 inches of water in 5 minutes. The costs are shown in Table 2-1. The costs have been divided into two categories. The first includes the cost of labor and equipment to initially bring an existing tank truck within the limits of the specified vapor tightness. The second category deals with the cost of maintaining a truck within specified vapor tightness limits after initial certification. These latter costs are generally lower after the tank has been maintained initially because many leak sources do not reappear at every succeeding vapor tightness test.

The costs to comply with San Diego requirements appear to be about two times greater than the State requirements. It is believed that as the allowable leak rate becomes smaller the significance of smaller leaks becomes greater. Hence, additional man-hours must be spent to identify and repair the smaller leaks.

Currently maintenance procedures and certification tests are performed on an annual basis. Several operators indicated that visual observations and minor maintenance are performed on the tanks between annual certifications. This maintenance is usually coordinated with the normal truck power unit maintenance schedule

Table 2-1. COSTS FOR MAINTAINING TRUCKS IN LEAK TIGHT[a] CONDITIONS[7,8,9,10]

	Labor Hours	Labor $[b]	Materials	Total Cost
Initial Certification[c]	30	630	70	700
Recertification[d]				
San Diego[e]	11	231	50	281
California[f]	4	84	50	134

[a]Leak tight defined as passing certification tests.

[b]Labor rate = $21/hr.

[c]Initial certification indicates truck has not been previously certified as leak tight.

[d]Recertification = Any retest following the first

[e]San Diego tests allow leak rate of 1 in. H_2O in 5 minutes.

[f]Costs are representative of a California allowable leak rate of 3 in. H_2O in 5 minutes.

which is performed approximately every 4 to 6 weeks. This periodic visual observation and minor maintenance normally costs approximately $50 to $100 per occurrence depending upon the amount of replacement parts required. The average cost is about $70 per occurrence.[11]

Estimates were received on the total tank maintenance required on the tank truck product handling equipment. This included maintenance for the vapor recovery hoses, couplers and adapters, internal valves, overfill protection and vapor recovery equipment. These costs ranged from $65 to $272 per month with an average monthly maintenance cost of $160 per month. These costs are average monthly costs based upon over 100 months of actual maintenance performed at two tank truck shops in California.[12] The total estimated annual maintenance required on the tank equipment would then be about $1,920 per year.

Incorporating these monthly maintenance figures and vapor tightness costs into Table 2-2, the total costs including certification testing and maintenance are shown. Costs are also shown indicating total costs if certification tests were required more often than once during the year. This is included because some operators felt the certification may be more meaningful if performed more often. However, with this they would like to see a relaxation of the vapor tightness requirements. The California certification program includes a gradual tightening of the leak rate limits until, in 1979, the requirements are the same as San Diego (1 inch of water in 5 minutes).

2.5.2 OTHER EMISSION SOURCES

Maintenance costs for other fugitive hydrocarbon emission sources would involve mostly labor requirements for visual inspections and cleaning of equipment. This would include visual inspections of vapor return lines, storage tank pressure-vacuum

Table 2-2. TOTAL ANNUAL MAINTENANCE COSTS FOR PRODUCT DELIVERY EQUIPMENT[a,b]

	Monthly Costs $	Total Annual Costs $
1. Product Delivery and Vapor Tightness Maintenance	160	1920
2. Product Delivery and Vapor Tightness Maintenance and Annual Recertification Maintenance and Testing		
San Diego	-	2200
California	-	2050
3. Product Delivery and Vapor Tightness Maintenance and Semi-Annual Recertification Maintenance and Testing		
San Diego	-	2480
California	-	2190
4. Product Delivery and Vapor Tightness Maintenance and Quarterly Recertification Maintenance and Testing		
San Diego	-	3040
California	-	2460

[a]Product delivery equipment includes delivery tank, couplers, internal valves, vapor recovery requipment, overfill protection, and dome covers.

[b]All costs are averages given on a per truck basis

vents, couplers, and adapters. These activities would be performed at bulk plants and terminals and by the tank truck operators. However, this type of maintenance program was not performed by the operators interviewed so no data on actual hours spent were obtained. The costs discussed here can therefore only be estimated. A visual inspection of the equipment including leak indication should take no more than 2 hours. As in the tank truck maintenance, the initial equipment inspection will turn up many more leaks than subsequent inspections assuming the leaks are repaired after the first inspection. The time required to perform the maintenance following the initial inspection cannot be estimated because of the numerous possibilities of leak sources. If a labor rate similar to that used for the truck maintenance is used, the inspection should not cost more than $42 per occurrence. The most likely place for leaks, once piping losses have been repaired, would be at pressure vacuum-vents or at vapor tight dry break couplers. This maintenance would generally require cleaning of valve seats or replacement of gasket material. If it is assumed this takes an additional 2 hours and that average replacement parts were similar in cost to that of tank trucks ($20), the total cost of this maintenance would be $104 per occurrence.

References for Section 2.0

1. Leak Testing of Gasoline Tank Trucks, Scott Environmental Technology, EPA Contract No. 68-02-2813, Work Assignment No. 19, August 1978 (Draft).

2. Ibid.

3. Powell, D.J. and D.E. Hasselman, Reliability Observations and Emission Measurements at Gasoline Transfer Vapor Recovery Systems. TRW, Inc., EPA Contract No. 68-02-0235, November 1974.

4. Letter from R.A. Nichols Engineering to H.B. Uhlig, Chevron U.S.A., June 10, 1977.

5. Control of Hydrocarbons From Tank Truck Gasoline Loading Terminals. EPA - 450/2-77-026, October 1977.

6. Presentation by John Snyder, Chevron U.S.A. to California Air Resources Board, December 2, 1976.

7. Larry Cowie, Shell Oil, File data on Actual Maintenance Performed.

8. Telephone conversation with Jack Ritterbush, J & L Tank, Lynwood, California, March 1979.

9. Telephone conversation with Ray Schaffer, Weld-It, Los Angeles, March 1979.

10. Telephone conversation with Ken Gay, Paramount Tank, Paramount, California, March 1979.

11. John Snyder, 1976.

12. Larry Cowie, Shell Oil and Frank Canning, Chevron, U.S.A., File Data on Actual Maintenance Performed.

3.0 DEVELOPMENT OF MONITORING PROCEDURE

3.1 TEST METHODS

Several test methods were explored as to their acceptability or usability as a monitoring procedure within the confines of this task. A test method was sought that would give pass-fail compliance information for hydrocarbon leakage at various sources. The test method desired was to be low cost, quick, and would not require taking the truck out of service for any great length of time. The methods researched for their usefulness are described in the following sections.

3.1.1 VAPOR TO LIQUID VOLUME DETERMINATION (V/L)

This method determines a ratio of the volume of vapor exhausted versus the volume of liquid loaded (V/L ratio). The liquid volume is determined by monitoring the gallons of liquid loaded and converting this to cubic feet. The volume of vapors displaced are monitored by installing a low pressure drop, positive displacement meter in the vapor return line. Pressure, vapor temperature and liquid temperature can also be monitored during transfers. The V/L ratio is a simple volume ratio without corrections. However the additional physical data obtained can be used to explain some phenomena which take place. This method has been used before in conjunction with EPA mass emission tests at both bulk plants and terminals. The EPA method calls for obtaining a leak tight truck and determining the V/L ratio. An average V/L ratio is then calculated for leak tight trucks. The leak tight trucks are used to determine a baseline for comparison of the other trucks tested. The V/L for other trucks checked during the test period is compared to the baseline value to determine the amount of vapor leakage which occured.

3.1.2 EXPLOSIMETER

The explosimeter method calls for the use of an explosimeter or combustible gas analyzer to monitor the potential leakage sources described in Section 2.1 for evidence of hydrocarbon emissions. The probe of the portable instrument is positioned around the potential leak source and the meter reading recorded in percent of the lower explosive limit (LEL). Explosimeters have long been used to pinpoint leakage points when handling gasoline or hydrocarbon vapors. The method calls for monitoring of truck hatches, P-V vents, couplers, hoses, etc. during loadings and unloadings of gasoline from the truck tanks and recording the relative leakage observed.

3.1.3 SONIC DETECTOR

The sonic detector is used in a similar fashion as the explosimeter. Instead of measuring hydrocarbons, the sonic detectors monitor the noise made by the gas escaping through the leak area. The sonic detector can be used to measure leakage caused by any gas and can be used if the system is either under pressure (leakage out) or vacuum (leakage in). The sonic detector could monitor at all the same emission sources as the explosimeter or combustible gas analyzer.

3.1.4 SAN DIEGO "BAG" TEST

In this test method, a bag is placed over the dome cover to capture and quantify the otherwise fugitive vapors. The bag is attached to a modified bicycle tire which has been filled with sand. The weight of the sand in the tire forces the assembly against the truck tank and creates the vapor seal. The bag is sized based upon calculations of the amount of vapors that would be lost given the allowable pressure decline rate (1 inch H_2O in 5 minutes for San Diego County). The bag is placed over the compartment which is being loaded and the number of times the bag fills or the approximate

volume of vapors collected in the bag is estimated. The bags are oversized so that on filling, San Diego County inspectors are certain that a violation has taken place.

3.1.5 PRESSURE-VACUUM TEST (CARB)

The California Air Resources Board (CARB) has passed regulations which define the degree of tightness that is required on gasoline delivery tanks. To ensure that this tightness is maintained, all trucks must pass a pressure tightness test each year. A test procedure was derived by the CARB which would be used to test the trucks as to their tightness. This CARB procedure was then used as the reference method, for this project, for comparison with other methods. The truck, if its last load was gasoline, is purged of volatile hydrocarbon gases by blowing air into the compartments with the dome lids open. This purging has normally been done for about 10 minutes per compartment. This will remove the volatile vapors and allow a better pressure determination within the test tank. Some truck owners will either purge the compartment with diesel or make the last load before testing diesel. This will eliminate the volatile vapors in the truck compartments and eliminate the necessity of purging. The trucks are then brought into a covered shop area where the effects of temperature variation, and therefore pressure variation, caused by the sun and wind would be minimized. The truck hatches are closed and the delivery and vapor transfer hoses are attached and capped on the ends. The internal valves are opened and the compartments are all manifolded together. The compartments can be tested separately, but this is considerably more time consuming.

The truck is then pressurized, most commonly with shop supplied compressed air. A manometer is attached to the truck and the truck pressure brought to 18 inches of water. The pressure loss versus time is monitored and checked against the allowable leakage rate.

The allowable leakage rate at the time of this report is 2 inches of water in 5 minutes (from 18 to 16 inches of water) for all the State of California except San Diego County. In San Diego, the allowable leakage rate is 1 inch of water in 5 minutes. As of June 1, 1979, the entire State will be required to meet the 1 inch in 5 minutes criteria. The truck is then placed under vacuum, most commonly using the vacuum supplied by the exhaust manifold of an automobile engine. The tank is evacuated to 6 inches of water and the pressure monitored again for 5 minutes. The allowable in-breathing at the time of this report is 2 inches of water in California and one inch of water in San Diego. Many of these other test methods discussed are based upon estimating the amount of leakage that is allowed or specified by the CARB certification test procedures.

3.1.6 BUBBLE INDICATION METHOD

This test method employs the use of a soap solution or other solution which will indicate gas leakage by the forming of bubbles around the leakage area. The solution is applied to hoses, coupler interfaces, hatch covers and pressure vacuum vents. The appearance of bubbles indicates a leakage source.

3.1.7 QUICK LEAK DECAY

The quick leak decay method is similar in concept to the CARB pressure-vacuum test method except that liquid is used to supply the pressure or vacuum needed to determine the amount of pressure or vacuum loss. Liquid, such as gasoline or diesel, would be desirable to use since the truck would not have to be removed from service. During loading, the vapor return line would be capped off, and liquid pumped into the vehicle until the desired pressure is reached. The truck would be allowed to stabilize and then the pressure decay would be noted. During unloading at a bulk plant or service station the vapor return line would be capped off toward the end of the unloading (tank close

to empty) and gasoline allowed to flow out until the desired vacuum is reached. This time the increase in pressure (or decrease in vacuum) is monitored with respect to time. The leak rate during the vacuum test is performed with a tank as close as possible to empty to best correlate with the CARB test methods.

No one has used this quick leak decay method as described in the field. This method was suggested because of its advantages. The method is a quick, in-service test and is roughly equivalent to the CARB procedures. Some California companies have used variations of this test method. One operator pressurizes diesel vapors with diesel fuel to obtain the desired pressures. Another operator places the truck inside a garage and pressurizes gasoline vapors with water. Time is needed however for vapors to stabilize.

3.1.8 VOLUME LEAKAGE

The volume leakage method maintains a constant pressure in the test compartment by continually introducing air into the compartment. It is assumed that the amount of air introduced into the compartment to maintain the desired pressure is equal to the leak rate at that pressure. The tank is pressurized to the desired pressure in a similar manner as described in the CARB test method and a rotameter is used to measure the amount of air necessary to maintain the pressure. When the introduction rate has been stabilized, the rate of air introduced into the tank is assumed to be equal to the leak rate of gases out of the tank.

3.2 EVALUATION OF TEST PROCEDURES

The test procedures were included in a field test program performed under a separate EPA contract (No. 68-02-2813). These included the explosimeter method, sonic detector method, CARB method, V/L method, bubble indication method, and the volume leakage test. The quick leak decay method was analyzed under

laboratory conditions and the San Diego "bag" test method was observed in the field, as performed by San Diego County personnel.

Tank trucks were monitored during loading with an explosimeter and sonic detector to determine leakage and an in-line volume meter to determine the volume of vapor transferred. Shop tests such as the CARB test and volume leakage test were also performed on each test tank both prior to and after maintenance being performed. Shop tests were performed on 26 tanks and leaks were monitored during 207 tank loadings.

Both a top and bottom loading terminal were selected for inclusion in the test program. The top loading terminal, operated by Shell Oil Company, was located in Los Angeles, California. The bottom loading terminal, operated by Chevron, U.S.A., was located in Montebello, California. Selection of the truck fleet to be tested was important to obtain a representative cross-section of trucks. At the beginning of the project, data indicated that the age of the tank and its corresponding vapor containing equipment may be significant. Tanks were selected for the test program, therefore, in an attempt to maximize the number of tanks that could be tested and to obtain a reasonable cross-section of tanks of varying ages and tanks with varying types of vapor containing equipment. Data on the trucks selected for the test program are shown in Table 3-1. Included in the table is information on capacity of the tank shell, type of dome cover used, type of vapor piping employed, number of compartments, type of suspension, and the year the tank was put into service (tank age). The type of suspension was included in the data because the spring type suspension is sized upon a fully loaded tank. This results in a very stiff ride when empty and subjects the vapor containing equipment to additional vibrations. Air suspension on the otherhand can vary as the load changes and should yield a smoother ride. All tanks tested used the overturn rail for the manifold line on the vapor piping system. However, several types of vent valve covers and piping to the overturn rail were observed.

Table 3-1. TEST FLEET PHYSICAL DATA

Top Loading

Tank I.D. Number	Age[a]	No. of Compart-ments	Tank Shell Capacity, Gallons	Liquid Capacity, Gallons	Hatch Type	Suspen-sion	Vapor Recovery Type	
							Vent Cover	Vapor Line
63806	8/74	2	4408	4000	No Data	Air	No Data	No Data
53306	12/74	3	5159	4800	No Data	Spring	No Data	No Data
63767	7/73	2	4408	4000	Tiona	Air	Welded	Welded
53256	9/68	3	5380	No Data	Tiona	Spring	Welded	Welded
63766	7/73	2	4408	4000	Tiona	Air	Welded	Welded
53345	9/77	3	5315	4900	Tiona	Spring	Rubber Boot	Rubber Hose
63765	7/73	2	4408	4000	C-B	Air	Bolted Cover	Clamped & Welded Pipe
53304	11/73	3	5159	4800	2-C-B/ 1-Tiona	Spring	Bolted Cover	Clamped & Welded Pipe
63804	4/74	2	4408	4000	Tiona	Air	Bolted Cover	Welded Pipe
53307	12/74	3	5159	4800	Tiona	Spring	Bolted Cover	Welded Pipe
63803	4/74	2	4408	4000	Tiona	Air	Bolted Cover	Welded Pipe
53297	7/74	3	5159	4800	Tiona	Spring	Bolted Cover	Welded Pipe
63805	4/74	2	4408	4000	Tiona	Air	Bolted Cover	Welded Pipe
53305	12/74	3	5159	4800	Tiona	Spring	Bolted Cover	Welded Pipe

Table 3-1. TEST FLEET PHYSICAL DATA (CONCLUDED)

Bottom Loading

Tank I.D. Number	Age[a]	No. of Compart-ments	Tank Shell Capacity Gallons	Liquid Capacity Gallons	Hatch Type	Suspen-sion	Vapor Recovery Type	
							Vent Cover	Vapor Line
67-775	6/67	5	8650	8150	Tiona	Air	Welded	Welded
67-182	4/71	5	8650	8250	Tiona	Air	Welded	Welded
67-392	4/73	5	8650	8050	C-B	Air	Bolted	Rubber Hose
67-475	10/74	4	8650	8200	Tiona	Air	Welded	Welded
68-795	4/78	2	5097	4600	C-B	Spring	Welded	Welded
68-795*	4/78	2	5319	4350	C-B	Spring	Welded	Welded
68-597	9/75	2	5087	4300	Tiona	Air	Welded	Welded
68-597*	9/75	2	5327	4550	Tiona	Air	Welded	Welded
68-275	11/62	2	4447	3670	C-B	Spring	Bolted	Rubber Hose
68-275*	11/62	2	5053	4400	C-B	Spring	Bolted	Rubber Hose
68-977	8/69	3	5184	4000	Tiona	Spring	Welded	Welded
68-977*	8/69	3	5180	4750	Tiona	Spring	Welded	Welded

* Trailer

[a] Tank age indicates year put into service

The test programs at both the top and bottom loading terminals were nearly identical. The trucks to be tested were scheduled into the shop at varying times during the week for various tests to be performed. Meanwhile, monitoring of leaks was performed on all loadings of trucks included in the test plan. This included monitoring for leaks before and after shop tests and maintenance to yield information on tanks that leaked and tanks that were vapor tight. Loadings were monitored using the explosimeter method, sonic detector method and the V/L method.

Before the trucks were tested in the shop, removal of the volatile gasoline vapors was necessary. At the bottom loading terminal the trucks were scheduled to haul a load of diesel before being tested. The returning truck therefore had less volatile diesel vapors in the compartment prior to pressurization. At the top loading terminal diesel was not available so compartments were purged with air. The purging took place by blowing air through the compartments for 10-15 minutes each. This method did not prove to be as effective as the diesel method for removing volatile vapors because longer stabilization times were experienced.

In the shop, equipment was arranged and a volume leakage test was conducted on the test tank before any maintenance was performed. A volume leakage rate was determined for varying pressures starting with 9 inches of water and increases to 18 inches of water in 3 inch increments. This was performed to establish a leak rate before any higher pressure might "blow" a leak and also to determine if the leak rate increased rapidly with pressure. A CARB pressure and vacuum test followed the volume leakage tests.

This established the condition of the truck with respect to leak tightness prior to maintenance. Maintenance was then performed on the truck tanks to make them leak tight as defined by the CARB leak rate criteria (See Appendix B). A CARB pressure vacuum test and volume leak rate test were then performed again to establish the post maintenance condition of the truck.

3.2.1 PRESSURE-VACUUM TEST (CARB)

The CARB pressure-vacuum tests were performed on each tank at least once during the test period. The tanks were tested both prior to maintenance and after maintenance procedures were performed. This defined the leak rate and the subsequent compliance status of the tank with regard to the CARB annual certification compliance criteria. This criteria is currently set as allowing a leak in the tank such that when the tank is pressurized to 18 inches of water, the pressure will not decline more than 2 inches of water in 5 minutes. The vacuum criteria allows a decrease from 6 inches of water vacuum to 4 inches of water vacuum in 5 minutes. By June 1979, the criteria for both pressure and vacuum variations will be set at 1 inch of water in 5 minutes. The Air Resources Board was contacted to determine the reason for the particular pressure and vacuum limits used in the certification test procedure. The pressure and vacuum vent valves are spring loaded and designed to slowly open and be full open at 1 psi (27 inches of water) pressure and 6 ounce (10 inches of water) vacuum as specified by DOT regulations. The limits selected by CARB are the maximum pressure or vacuum that can be applied to the tank before the vent starts to open.[3]

Back pressures observed during loading operations at both the top and bottom loading terminals ranged from as low as 1.7 inches of water to as high as 17.5 inches of water which approaches the value used by CARB in their certification testing. The average back pressure over 144 tank loadings was 7.3 inches of water. Figure 3-1 shows the frequency distribution of the back pressures experienced. These indicate, with the types of vapor recovery systems employed, that the loadings observed at both the top and bottom loading terminals are consistently lower than the 18 inch criteria used in the CARB certification test. Thus, if a tank is leak tight as defined by the CARB criteria, the terminal back pressure at these test sites would not be expected to cause a leak.

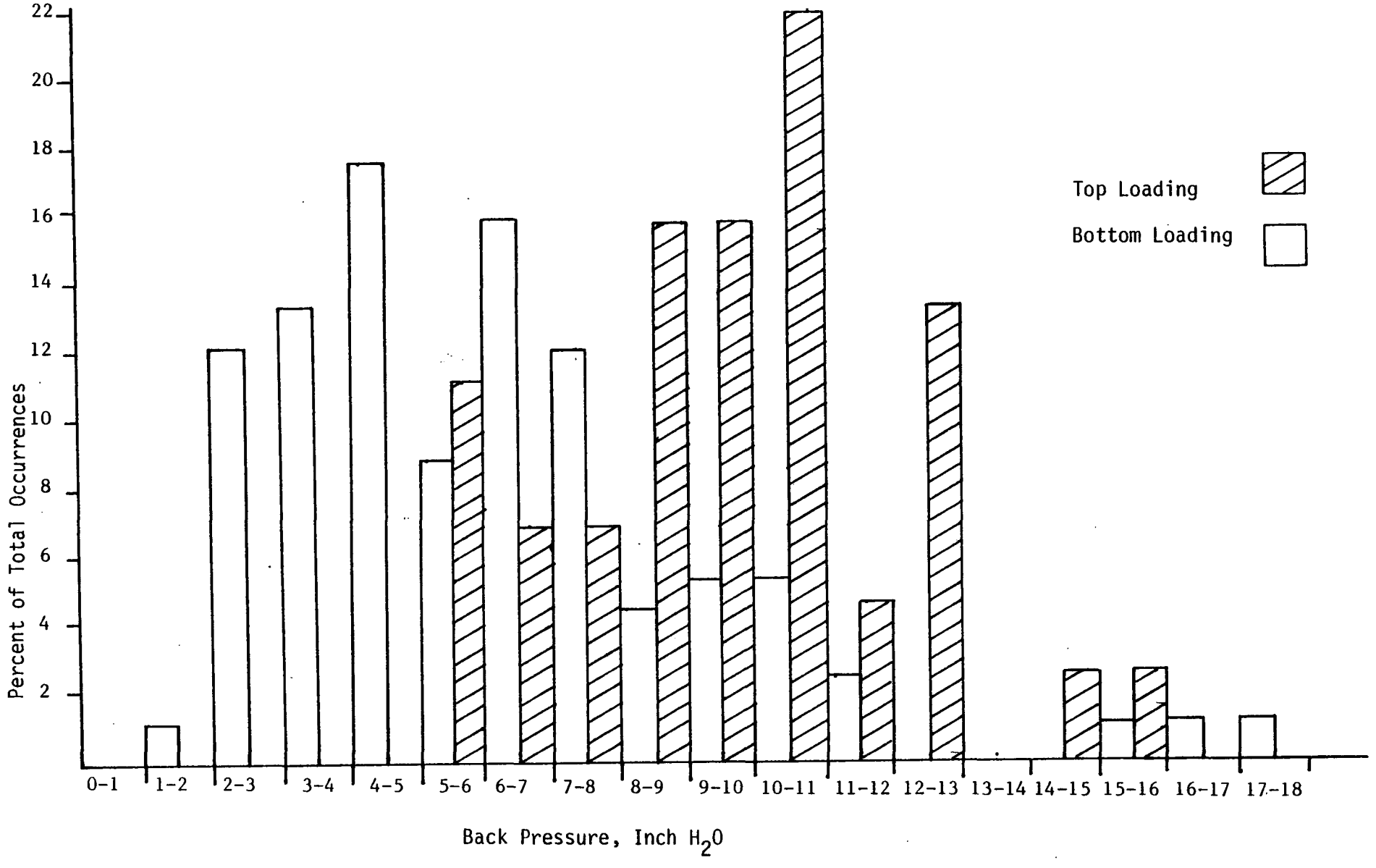

Figure 3-1. Frequency of Occurrences of Back Pressure During Loading Operations

Historical data were obtained from the terminal operators on each of the test tanks which included the dates of the previous certification. These data were used to determine how long the trucks were able to remain in certifiable condition under normal use. The shop test data were used to indicate the condition of the tanks which was compared to the historical data (see Table 3-2). As indicated, only four tanks remained in certifiable condition. The time since the last certification date ranged from four months to four days. Of the tanks that failed, the time frame ranged from one year to two weeks.

The CARB tests performed in the shops were also monitored for pressure drop past the 5 minute time requirement. Tests were run for as long as 20 minutes to determine if the pressure would continue to drop with time or would level off at a lower pressure. This was performed predominantly on the tanks before maintenance was performed to determine the extent of the leak. Figures 3-2 and 3-3 illustrate examples of the pressure decay rate. In almost every case, the pressure continued to decline at an approximately linear rate. This indicates the pressure decay rate is more dependent on the size of the leak than on the pressure in the test tank.

A phenomenon was also noted in the shop tests at the top loading facility. The tank was pressurized to 18 inches of water and the pressure increased with time. This occurred at the top loading terminal where the compartments were degassed by blowing air through them and not at the bottom loading terminal where the gasoline vapors were removed by hauling a load of diesel prior to the test. This phenomenon was duplicated in the laboratory using a small leak tight tank which had held gasoline. The tank was loaded and unloaded with gasoline several times. A pump was then used to push air through the tank to simulate the degassing. After 20 minutes of degassing the tank was immediately pressurized and sealed. The pressure again increased with

Table 3-2. TANK TIGHTNESS HISTORY

Tank Identification Number	Last Certification Date[a]	Field Test Date	Pass/ Fail	Type of Loading
63806	2/24/78	6/23/78	F	Top
53306	2/24/78	6/23/78	F	Top
63767	2/09/78	6/20/78	F	Top
53256	2/09/78	6/20/78	P	Top
63766	2/08/78	6/20/78	F[c]	Top
53345	2/08/78	6/20/78	F[c]	Top
63765	2/07/78	6/19/78	F	Top
63765[d]	6/19/78	6/23/78	P	Top
53304	2/07/78	6/23/78	P	Top
63804	2/16/78	6/21/78	F	Top
53307	2/16/78	6/22/78	F	Top
63803	2/10/78	6/21/78	F	Top
53297	2/10/78	6/21/78	F	Top
63805	2/28/78	6/22/78	F	Top
53305	2/28/78	6/22/78	F[c]	Top
67-282	5/18/78	6/14/78	F	Bottom
67-392	5/23/78	6/13/78	F	Bottom
67-475	5/24/78	6/15/78	P	Bottom
68-795	5/03/78	6/14/78	F	Bottom
68-795[b]	5/03/78	6/14/78	F	Bottom
68-597	6/13/77	6/13/78	F	Bottom
68-597[b]	6/13/77	6/13/78	F	Bottom
68-275	6/28/77	6/15/78	F[c]	Bottom
68-275[b]	6/28/77	6/15/78	F[c]	Bottom
68-977	5/03/78	6/16/78	F[c]	Bottom
68-977[b]	5/03/78	6/16/78	F[c]	Bottom
67-775	No data	6/12/78	F	Bottom

[a]Passed CARB Certification Test

[b]Trailer of Truck/Trailer Unit

[c]Tanks not maintained to pass conditions after field tests, all other tanks maintained to pass conditions.

[d]Tested twice during the field tests

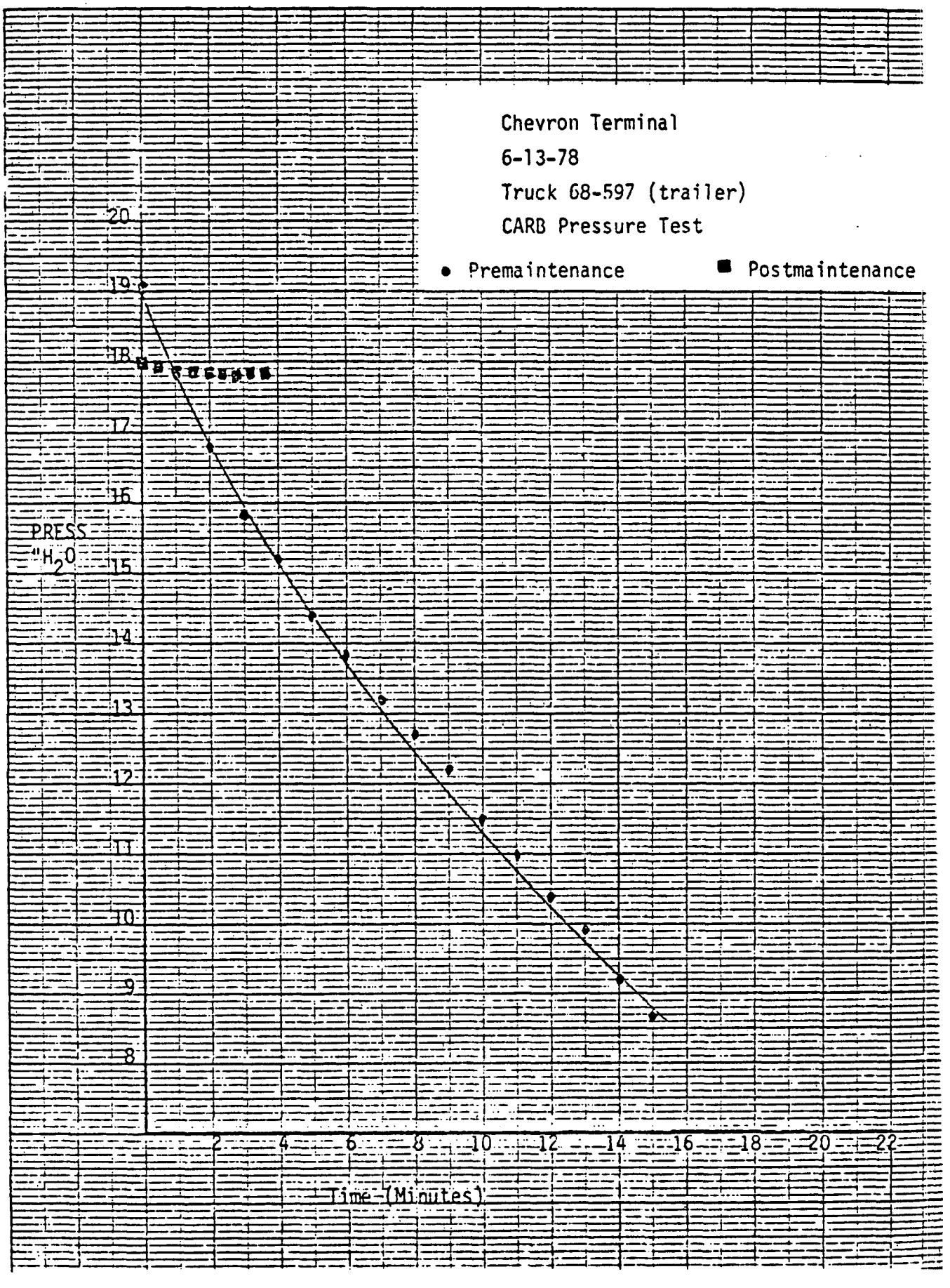

Figure 3-2. Typical CARB Pressure Test Results at Bottom Loading Terminal (Ref. 1)

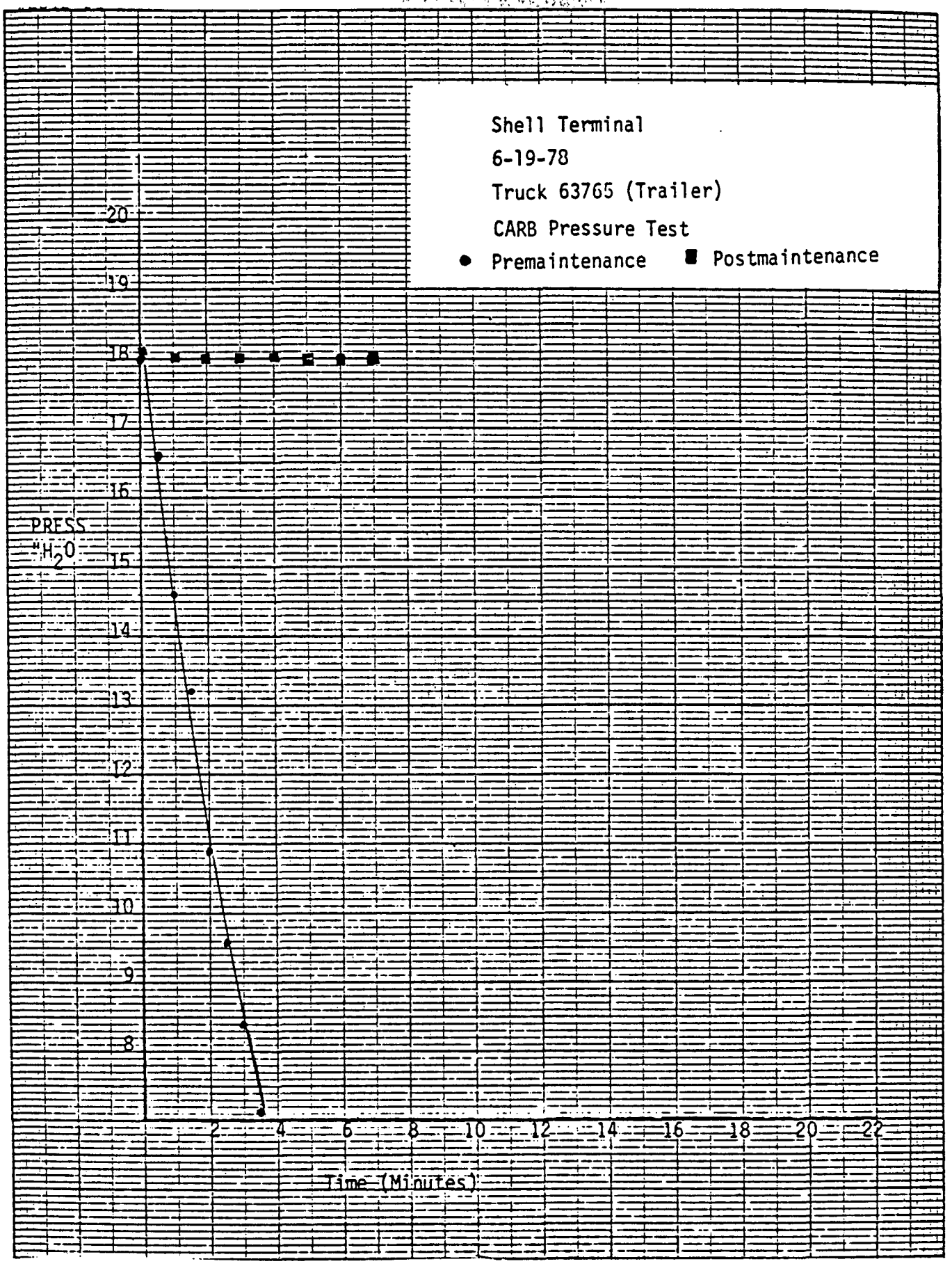

Figure 3-3. Typical CARB Pressure Test Results at Top Loading Terminal (Ref. 1)

time. When a vacuum test was attempted, the results appeared normal with the vacuum decreasing with time. This was repeated several times with the same results. The tank was then degassed and allowed to sit for 20 to 30 minutes. The tank was again pressurized and the results appeared normal with an initial equilization and then a constant pressure (see Figure 3-4). The data indicates that the pressurization of highly volatile vapors are greatly affected by slight changes in temperature. If proper degassing and stabilization is not performed, two possible results could occur. The pressure may increase with time, as described above, and if it increased faster than or equal to the actual leak rate the tank may be erroneously considered certified. The other possibility is that the pressure may decrease in the tank due to condensation of the pressurized vapors. The tank may then be wrongly defined as a leaking tank. In any case, the degassing and stabilization procedures appear to be important and a period of time after degassing is necessary before testing to allow the tank to stabilize.

For the purposes of a quick monitoring procedure as outlined by this project, the CARB method is not very reasonable. The truck must be taken out of service, degassed, and tested. Regardless if the maintenance is performed or not, the truck is out of service for approximately 3 hours. This required using either a back-up vehicle or rescheduling of deliveries. However, since this method quantitatively defines what a leak tight truck is, the method is very useful as an enforcement tool.

3.2.2 QUICK LEAK DECAY METHOD

The purpose of the quick leak decay method was to develop a quick procedure that was directly equivalent to the CARB procedure. The quick leak decay method was not included in the field test program because it was felt that additional information based upon laboratory tests was needed along with information regarding the

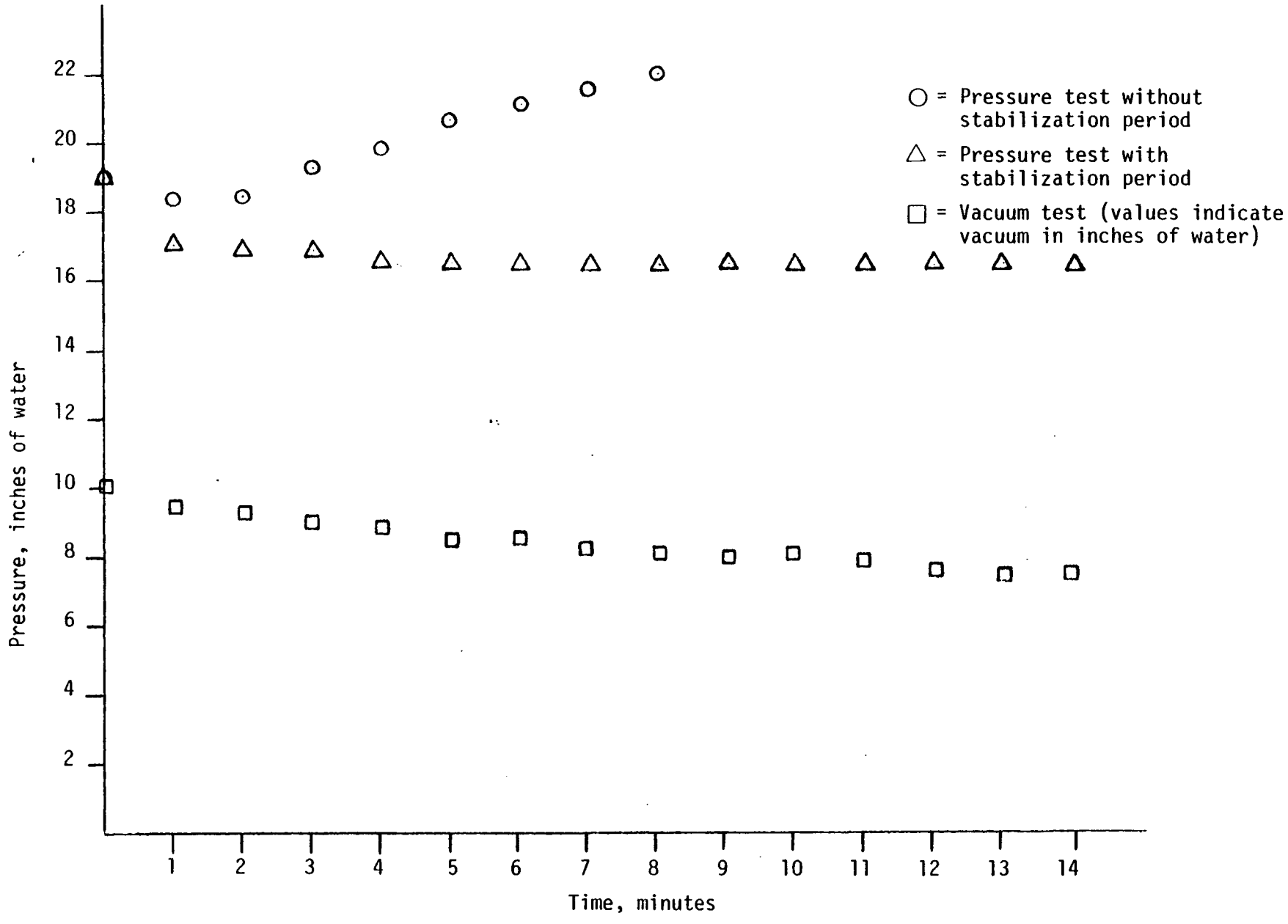

Figure 3-4. Laboratory Test Results for CARB Pressure Test

safety limitations. Safety was a factor that had to be dealt with because the method called for the pressurization of the delivery tank with liquid gasoline. Several fire marshalls were contacted and all gave similar responses. Since the tank pressure sought (18 inches of water) is below the pressure at which the tank is designed to maintain around the liquid gasoline (27 inches of water), there should be no safety problems. This was provided that the normal safety precautions regarding static discharge and proximity to sources of flame are upheld.

The laboratory tests were conducted by first constructing a leak tight delivery tank simulation model. The tank had to be leak tight to ensure that pressure changes taking place inside the tank could be attributed to liquid-vapor equilibrium changes and not to leaks in the tank. A pressure transducer was attached to the tank and all other ports sealed. The tank was pressurized and the pressure recorded on a strip chart recorder. A leak was found at a tank weld and repaired. Thermocouples were installed and attached to a multipoint recorder to monitor ambient temperature, tank vapor temperature, liquid temperature in the tank, and liquid loading temperature. The apparatus was assembled as shown in Figure 3-5. The tank had a capacity of approximately 10 gallons. To eliminate the hazards of pumping the gasoline, gravity was used as a driving force for loading or unloading the liquid gasoline.

After initially loading the tank with gasoline, it took some time to reach a stabilized condition (the pressure no longer increased with time). Once the system had stabilized, liquid was forced into the sealed tank until the desired pressure was reached. Temperature and pressure were recorded and the time required to reach a stable pressure noted. The pressure was released and the tank again sealed with the liquid still inside. The liquid was then allowed to drain out until the desired vacuum in the tank was achieved. Again temperature, pressure, and time were recorded until

1. Multipoint temperature recorder
2. Ambient temp
3. Vapor temp
4. Tank liquid temp
5. Entering liquid temp
6. Liquid gasoline supply
7. Pressure relief vent
8. Pressure transducer
9. Signal conditioner
10. Strip chart recorder
11. Test tank
12. Needle valve

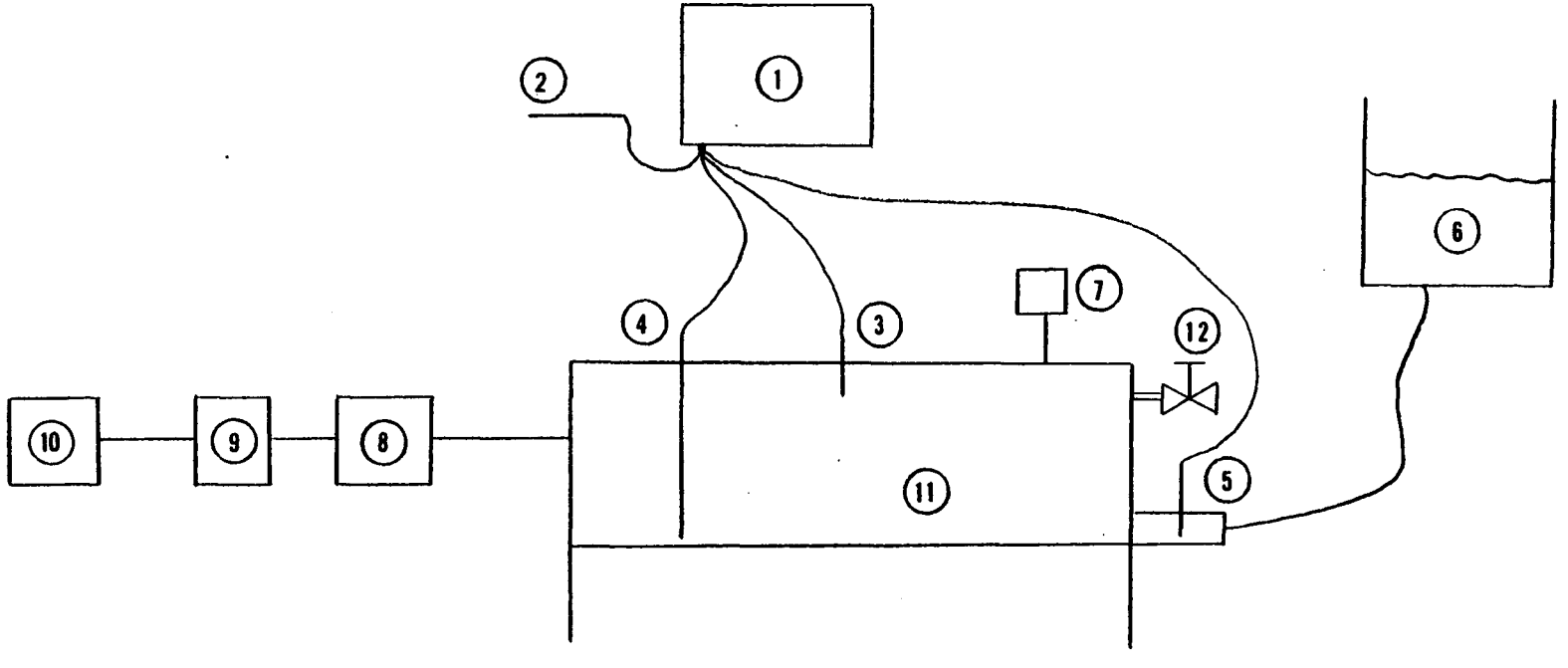

Figure 3-5. Quick Leak Decay Test Apparatus

a stable pressure was reached. Typical pressure versus time curves are shown in Figure 3-6. The time for stabilization of the pressure tests was normally about 10 minutes.

It is difficult to estimate what time period would be necessary to stabilize pressure in a full scale tank vehicle. It is safe to say, however, that this time period should be significantly longer. This time requirement will probably eliminate the usefulness of this method as a quick detection technique. Diesel fuel has been used successfully as a pressurizing liquid after the tank has been rinsed or flushed with diesel.[4] Diesel fuel is not available at all loading facilities so the method was assessed for acceptability using gasoline. Even though the test demonstrates that this method may not be usable as a quick monitoring technique, it did illustrate the need for removing as much gasoline vapor as possible from the test tank and allowing the test tank to stabilize before testing to obtain reliable results.

3.2.3 VOLUME LEAKAGE

The volume leakage test was performed in the shop prior to the CARB test and the results were compared with the results of the CARB test. The volume leakage test is simply a variation of the CARB test that measures the volume lost at a specified pressure instead of pressure drop. The method was selected to determine if it was simpler and more reliable than the CARB test. The pressure was first increased and held at 9 inches of water, then held at 12 inches of water, then 15 inches of water and finally, at 18 inches of water. This approach was used before the CARB test so that the lower pressure data could be obtained before reaching the higher pressures and eliminating the possibility of "blowing" a leak at the 18 inch pressure. The results of the volume leakage data as they compare to the CARB data is shown in Figures 3-7 and 3-8 for bottom and top loading instances. The top loading data are not as complete

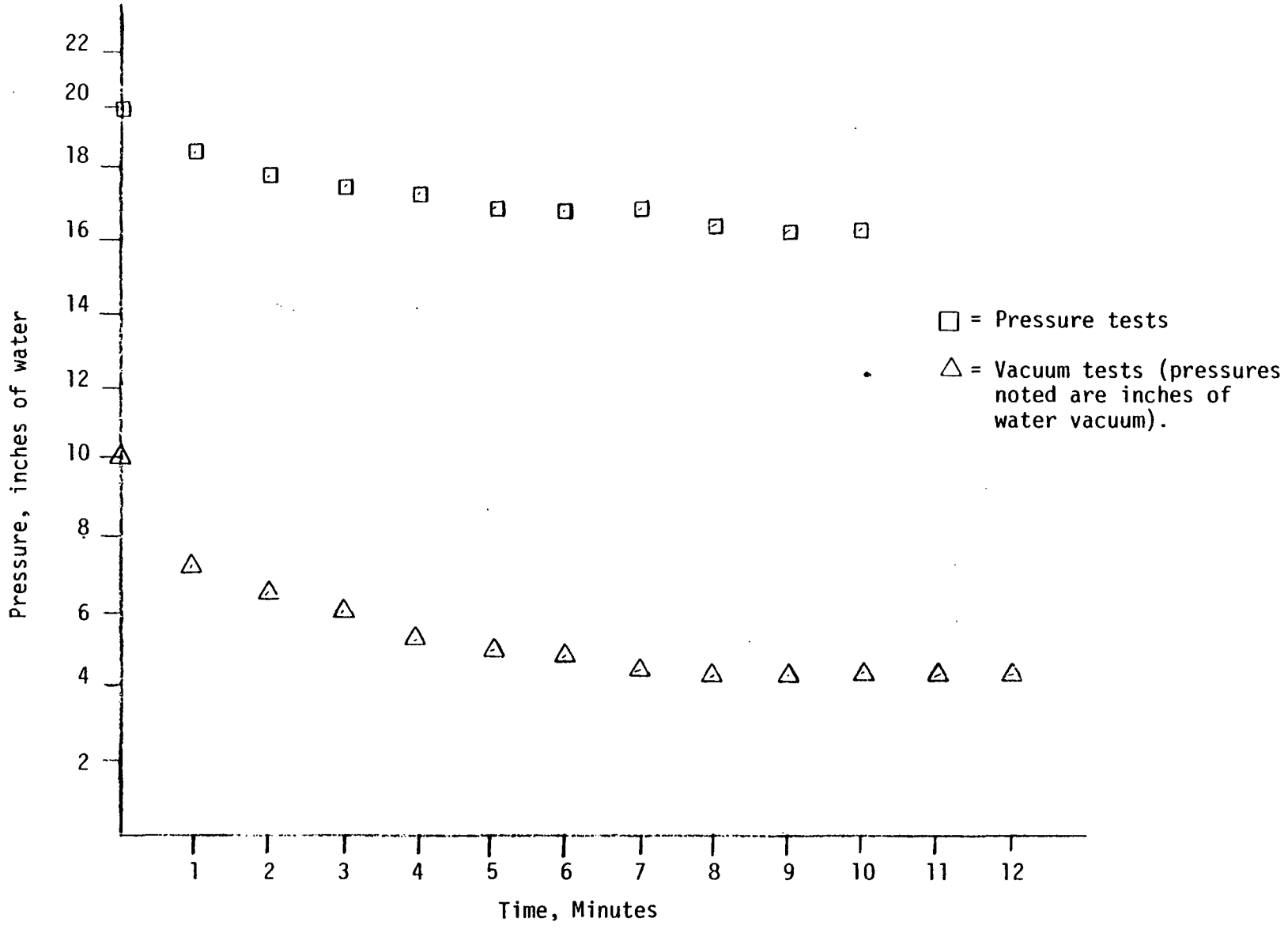

Figure 3.6. Typical Pressure Versus Time Curves for Laboratory Tests of Quick Leak Decay Method

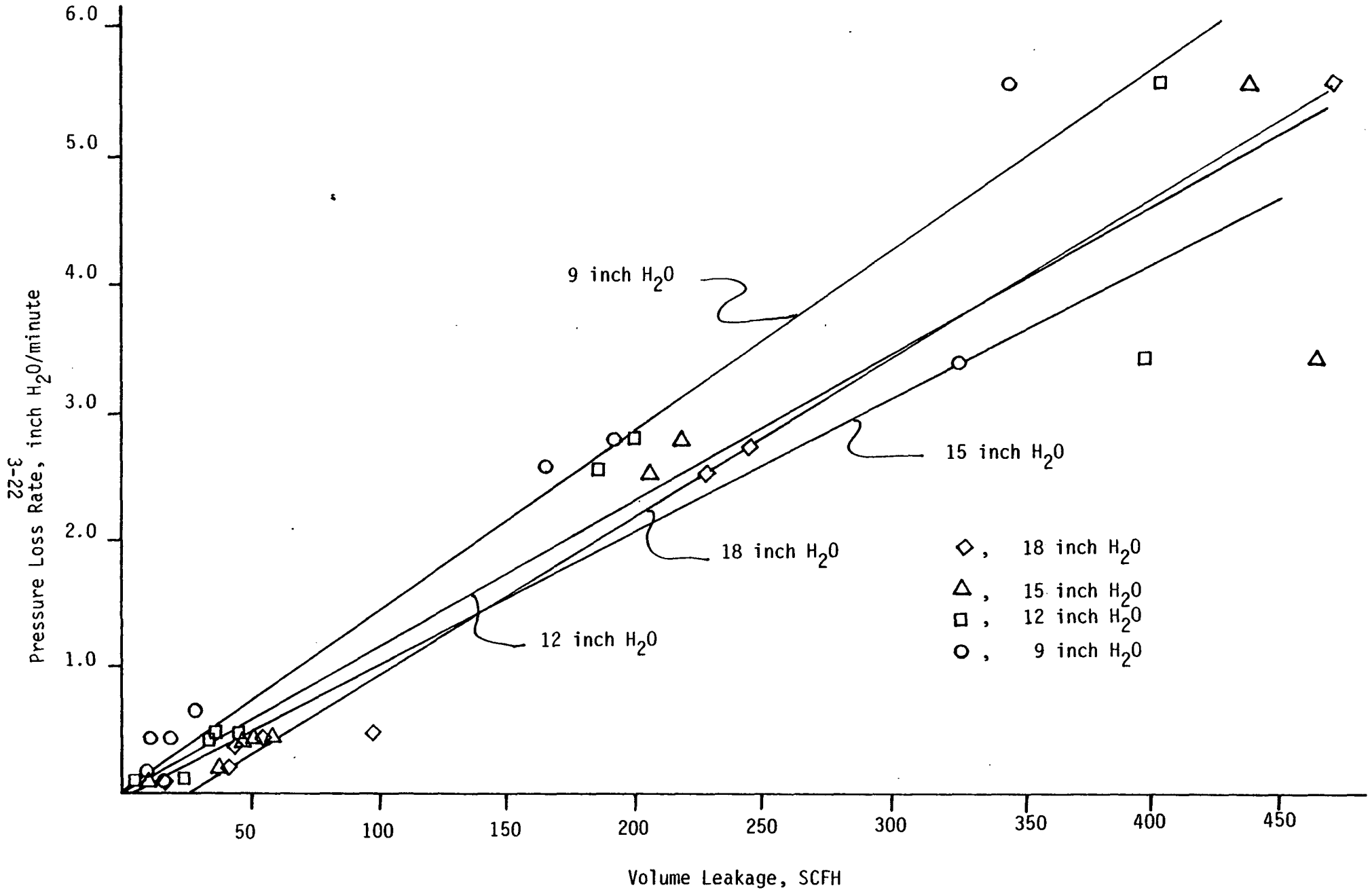

Figure 3-7. Volume Leakage vs Pressure Decay for Bottom Loaded Tanks at Various Pressures

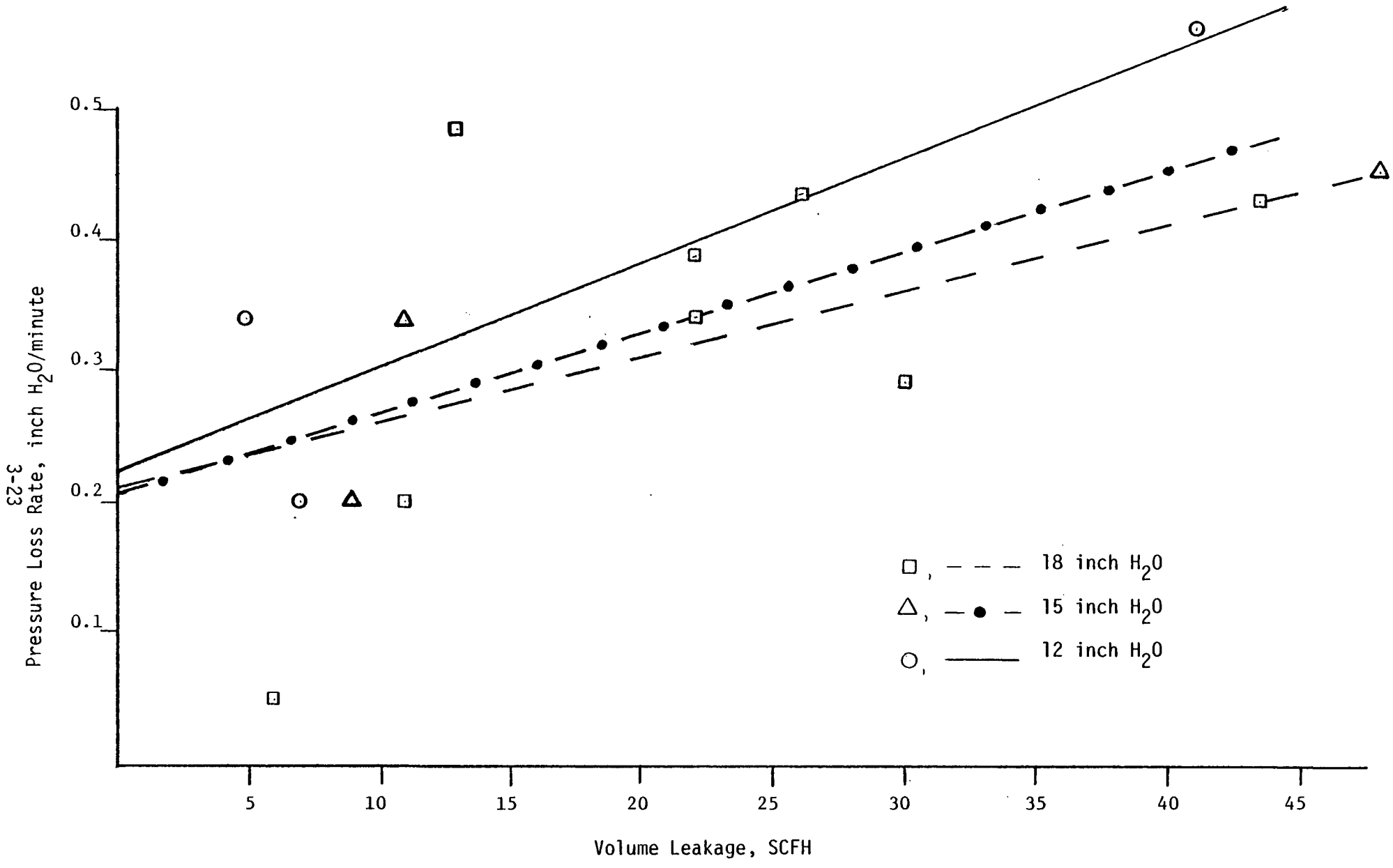

Figure 3-8. Volume Leakage vs Pressure Decay Rate for Top Loading Tanks at Various Pressures

as the bottom loading data because time constraints when performing the field tests did not allow testing of all of the tanks using the volume leakage method. Linear regression analyses were performed on the data and the best fit curves are illustrated. The correlation coefficients were calculated and the bottom loading data are significant at the 0.1 percent probability level. The top loading data were significant at the 10 percent level. Correlation coefficients for the volume leakage versus CARB test are listed in Table 3-3.

The volume leakage test compared favorably to the CARB method. However, the volume leakage method is not shorter or quicker than the CARB test but in fact longer and requires more equipment. The truck must still be taken out of service and degassed. In addition to all of the necessary CARB equipment, rotameters and corresponding valves and tubing for measuring volume rate are required. This method is, however, similar to the CARB method in that it can be used to define an acceptable leak rate.

3.2.4 V/L RATIO METHOD

Vapor to liquid volume ratios were determined for 120 loadings over the 2 week test period. The results were separated on a daily basis since the ambient conditions can strongly affect the V/L ratio which can be expected on a leak tight truck. Table 3-4 and Table 3-5 indicate the results of the V/L tests for both top and bottom loading. These tables present the V/L ratio for tanks that passed the CARB certification tests and those that failed.

The EPA terminal tests using the V/L method prescribe determining the V/L from a leak tight truck for a particular day or set of conditions and then comparing this value to the other trucks tested. The data presented in Tables 3-4 and 3-5 indicate a wide variability in the V/L ratio for both the tanks that pass and the

Table 3-3. CORRELATION COEFFICIENTS FOR VOLUME LEAKAGE RESULTS WITH RESPECT TO CARB TEST RESULTS

Constant Pressure Held	Correlation Coefficient
Bottom Loading	
9 inches H_2O	0.96
12 inches H_2O	0.95
15 inches H_2O	0.94
18 inches H_2O	1.00
Top Loading	
12 inches H_2O	0.90
15 inches H_2O	0.90
18 inches H_2O	0.65

Table 3-4. V/L RESULTS FOR TOP LOADING[a]

Run No.	Date	V/L Ratio		Temperature		Back Pressure (inches H_2O)
		Pass[b]	Fail[c]	Air °F	Vapor °F	
1	6/19		1.12	80	90	9.25
2	6/19		1.16	80	92	7.5
3	6/19		1.39	80	92	9.8
4	6/19		0.99	80	92	15.0
5	6/19		1.18	80	92	10.7
6	6/19		1.34	80	93	10.8
7	6/19		1.14	80	90	7.8
8	6/20	1.05		66	80	8.0
9	6/20		1.06	70	80	5.6
10	6/20		1.11	70	83	9.8
11	6/20	1.04		76	88	9.7
12	6/20		1.56	80	90	15.6
13	6/20		1.08	80	92	11.1
14	6/20	1.05		78	90	6.0
15	6/20		1.20	78	90	12.3
16	6/21	1.02		68	76	10.3
17	6/21		1.43	68	80	9.1
18	6/21	0.99		68	80	8.9
19	6/21	No data		68		
20	6/21	No data		70		
21	6/21	1.08		74	90	11.0
22	6/21		1.18	74	90	13.0
23	6/21		1.08	80	90	12.2
24	6/21	1.07		80	92	5.1
25	6/21		0.70	80	94	11.5
26	6/21	1.39		80	90	12.6
27	6/22		1.05	70	75	5.9

Table 3-4. V/L RESULTS FOR TOP LOADING (CONCLUDED)

Run No.	Date	V/L Ratio		Temperature		Back Pressure (inches H_2O)
		Pass[b]	Fail[c]	Air °F	Vapor °F	
28	6/22	0.95		70	80	9.3
29	6/22	No data		70		
30	6/22	1.07		70	82	10.8
31	6/22	1.01		72	80	10.6
32	6/22		1.49	78	83	9.0
33	6/22	1.05		80	89	12.8
34	6/22	No data		80		
35	6/22	1.15		80	88	8.9
36	6/22	No data		81		
37	6/22	1.42		82	94	12.7
38	6/22		1.47	82	92	10.9
39	6/22	No data		82		
40	6/22	No data		72		
41	6/22	1.06		72	90	10.5
42	6/22		1.06	77	86	8.6
43	6/22	0.80		77	86	10.5
44	6/22	1.22		77	86	8.5
45	6/22	0.80		78	86	6.7
46	6/23		1.06	80	88	10.8
47	6/23	No data		80		
48	6/23	0.71		84	92	6.6
49	6/23	No data		88	96	6.3
50	6/23	1.09		88	96	8.2
51	6/23		1.01	84	87	9.2
52	6/23	1.04		84	85	8.9
53	6/23		1.12	78	88	5.2

Notes for Table 3-4

[a] All trucks tested were truck and trailer units but a V/L ratio could not be obtained for each tank. Tanks were loaded simultaneously and all loading arms manifolded together before the vapor meter.

[b] Pass indicates a tank that will meet the CARB leak tight criteria.

[c] Fail indicates a tank that leaks greater than the allowable rate defined by the CARB leak tight criteria.

Table 3-5. V/L RESULTS FOR BOTTOM LOADING

Run No.	Date	V/L Ratio		Temperature		Back Pressure (inches H_2O)
		Pass[a]	Fail[b]	Air °F	Vapor °F	
1	6/12		1.23		98	11.5
2	6/12		0.86		98	4.4
3	6/12		0.97		101	5.5
4	6/12		0.55/ 0.88[c]		100/ 110	4.1/ 4.8
5	6/12		0.85/ 0.75		108	1.7/ 2.4
6	6/12		0.84/ 0.95		108	9.5/ 7.1
7	6/12	1.02			110	7.3
8	6/12		0.96/ 0.63		106/ 103	7.5/ 4.9
9	6/13		1.01		78	2.7
10	6/13		0.94		79	3.0
11	6/13		1.06		98	5.1
12	6/13	1.02			100	5.5
13	6/13		0.89		90	6.9
14	6/13		0.99		96	15.8
15	6/13	1.26/ 1.02			110/ 102	6.1/ 6.3
16	6/13		0.79	95	108	3.4
17	6/13	0.96		95	106	8.9
18	6/13		0.98	95	110	10.1
19	6/13	1.11/ 0.78		93	102/ 103	10.2/ 4.1
20	6/13		0.61	91	100	4.3
21	6/13		0.37/ 1.06	91	100/ 103	3.8/ 2.6
22	6/13	0.88		90	100	9.1
23	6/13	0.84/ 0.80		90	100	3.8/ 6.0

Table 3-5. V/L RESULTS FOR BOTTOM LOADING (CONTINUED)

Run No.	Date	V/L Ratio		Temperature		Back Pressure (inches H_2O)
		Pass[a]	Fail[b]	Air °F	Vapor °F	
24	6/14	0.71/ 0.82		68	78	17.5/ 16.2
25	6/14	0.84		71	83	3.0
26	6/14	1.15		73	80	6.6
27	6/14		0.69	76	84	3.0
28	6/14		0.87/ 1.00	78	89/ 92	2.7/ 2.3
29	6/14	0.83		79	85	4.9
30	6/14		0.93/ 0.67	85	90	7.7/ 8.1
31	6/14	0.97		86	90	10.7
32	6/14	0.67		87	100	10.0
33	6/14		0.80/ 0.91	88	92/ 102	4.0/ 3.0
34	6/14	0.88/ 1.12		87	98/ 104	9.4/ 7.1
35	6/14	0.99		88	96	4.0
36	6/14	0.91		88	100	8.9
37	6/14	0.92/ 0.72		87	100/ 90	4.3/ 5.6
38	6/15	1.07		67	75	6.4
39	6/15	0.80		67	70	7.4
40	6/15	0.97		69	76	6.2
41	6/15		0.80/ 0.75	71	82/ 80	8.0/ 7.5
42	6/15	0.78		73	86	11.0
43	6/15	0.99		74	83	7.1
44	6/15		1.08	77	90	4.1
45	6/15	0.83/ 0.97		79	90/ 92	6.5 4.3
46	6/15		0.92	83	98	5.4

Table 3-5. V/L RESULTS FOR BOTTOM LOADING (CONCLUDED)

Run No.	Date	V/L Ratio		Temperature		Back Pressure (inches H_2O)
		Pass[a]	Fail[b]	Air °F	Vapor °F	
47	6/15	0.96		83	98	5.4
48	6/15	0.83/ 0.70		86	103/ 90	4.1/ 8.3
49	6/15	0.84/ 0.88		84	90/ 104	3.5/ 4.0
50	6/15	0.96/ 0.93		86	90/ 107	3.4/ 3.4
51	6/15	0.89		86	90	4.7
52	6/15	1.03		87	92	4.7
53	6/15		0.81	86	103	4.1
54	6/15	0.90/ 1.04		87	102/ 87	6.2/ 7.3
55	6/16	1.00		67	80	10.5
56	6/16	1.06		70		6.9
57	6/16	0.91/ 0.74		72	72/ 84	6.9/ 4.6
58	6/16	0.99		78	76	12.0
59	6/16		0.88	79	78	3.9
60	6/16	1.02		80	88	3.7
61	6/16	1.52		84	90	4.7
62	6/16	1.07		85	97	6.2
63	6/16	1.04/ 1.17		85	100/ 93	5.5/ 6.9
64	6/16		1.12/ 1.14	87	79/ 81	7.5/ 9.4
65	6/16	1.03/ 0.98		85	101/ 103	8.0/ 6.8
66	6/16	0.95		85	95	3.5
67	6/16		0.58/ 0.88	84	100/ 92	3.0/ 2.3

Notes for Table 3-5

[a] Pass indicates a tank that will meet the CARB leak tight criteria.

[b] Fail indicates a tank that leaks greater than the allowable rate defined by the CARB leak tight criteria.

[c] Indicates the truck tested was a truck and trailer unit. Data is presented for each tank (truck/trailer).

tanks that fail the CARB reference test. A frequency distribution of the V/L ratios for both the tanks that passed and the tanks that failed is shown in Figure 3-9. As indicated by this figure, the V/L ratio takes the same frequency of occurrence regardless of whether the tank passed or failed the certification tests.

An attempt was made to determine if there was any correlation between V/L ratio and the back pressure observed in the tank during loading. Correlation factors were calculated for the V/L ratio versus back pressure. The correlation factors are shown in Table 3-6, and as indicated by the low factors, there is no correlation between V/L ratios and back pressure.

In summary, the V/L ratio showed no relationship between vapor tight tanks or tanks that leaked. The V/L ratio also showed no relationship when compared to the back pressure experienced during the loading operation.

3.2.5 EXPLOSIMETER METHOD

The explosimeter method was extensively tested in the field test program. The CARB pressure test was used as the reference to determine the acceptability of the explosimeter method. During each tank loading, the explosimeter was used to monitor for leaks at the hatch cover, P-V vent, vapor piping, couplers, etc. The explosimeter used was calibrated against propane and used a 1/4-inch diameter probe. When monitoring for leaks, the explosimeter probe was held at a distance of 1 inch from the source and the highest level was recorded. Loadings were monitored before and after the CARB certification test and maintenance to determine whether the tank was under a leak tight condition as defined by the CARB criteria. The readings taken by the explosimeter were then compared to the CARB results to determine the magnitude of readings obtained on a leak tight tank and on a tank which is known to leak. This was performed at both top and bottom loading facilities.

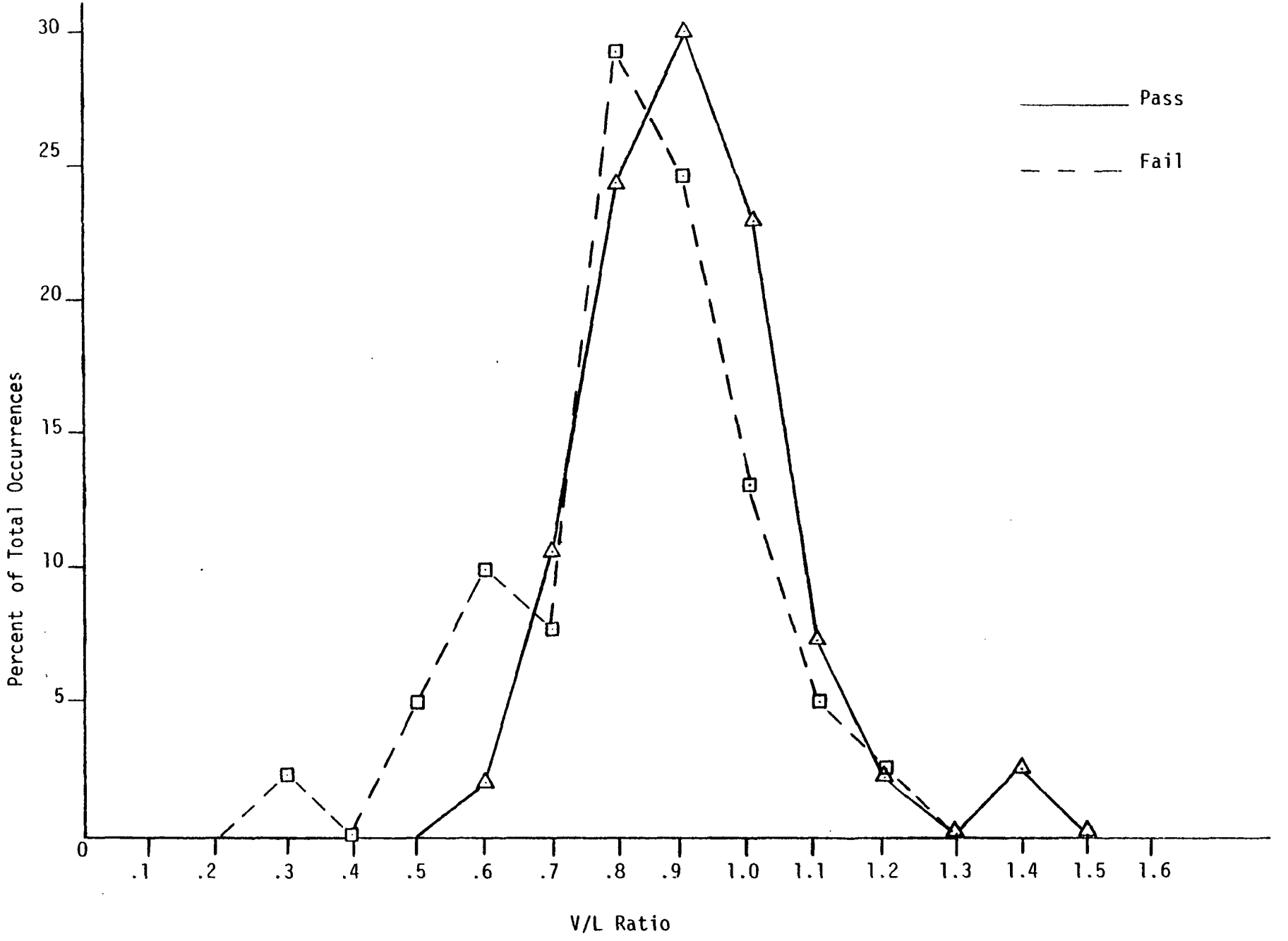

Figure 3-9. Frequency Distribution of V/L Ratio for Tanks That Pass Certification Tests and Tanks That Fail Certification Tests

Table 3-6. CORRELATION FACTORS (r) FOR V/L RATIOS AND TANK LOADING BACKPRESSURE

Loading	Pass/Fail	r
Top	Pass	0.49
Top	Fail	-0.02
Bottom	Pass	0.04
Bottom	Fail	-0.02
Combined	Pass	0.03
Combined	Fail	-0.07

The results were much more consistent and meaningful at the bottom loading terminal than at the top loading terminal. At the top loading terminal, since the hatch cover is not closed, the data do not reflect the relative vapor tightness of the tank which is traceable back to the CARB pressure test. Instead, the loading arm/ hatch interface, loading arm connections and swivels become the major sources of hydrocarbon leakage.

Tables 3-7, 3-8, and 3-9 show the results of the explosimeter tests performed at the loading terminals. Data were not included in the tables if the previous load was diesel fuel or if liquid interference would cause an erroneously high reading. If data were not complete for all compartments of a tank, the tank was not included in the data base. When discussing the usefulness of this test method as a means of performing tank vapor tightness, the discussion will be limited to the bottom loading data. Leaks were detected at almost every top loading occurrence regardless of whether the tank had passed or failed the CARB certification test. The data from the bottom loading terminal indicate that the tanks that fail the CARB ceritification test show considerably more leaks at the compartments than the tanks that pass the certification tests. This becomes more significant as the explosimeter readings become larger. For example, at the 0.5 lower explosive limit (LEL) level, over 90 percent of the compartments indicating this relative size of leak were those that failed the certification tests. At the 1.0 LEL level, over 95 percent of the hatches indicating this relative size of leak, failed the certification tests.

When discussing the data on a per tank basis rather than on a per compartment basis, the method appears even better. As shown in Table 3-9, every tank that failed the field CARB tests was judged a fail tank by the explosimeter method. In other words, not one leaking truck was missed using the explosimeter method. At the 1.0 LEL level, 9.5 percent of the tanks which passed the CARB test were incorrectly identified as a leaking tank.

Table 3-7. PERCENT OF COMPARTMENTS WITH LEAKS[a] AT SPECIFIC LOCATIONS

	Top Hatch	Base Ring	P-V Vent[g]	Loading Arm Vapor Connectors	Terminal Vent Cover
Top Loading					
Pass[c]	99.3[b]	85.9	N.A.	43.0	40.8
Fail[d]	94.9	82.2	N.A.	33.1	34.7
Total[e,f]	97.3	84.2	N.A.	38.5	38.1
Bottom Loading					
Pass[c]	5.2	8.6	7.8	N.A.	N.L.[h]
Fail[d]	42.3	42.3	48.7	N.A.	N.L.
Total[e,f]	22.7	22.2	24.2	N.A.	N.L.

[a]For purposes of this table, a leak was defined as any deflection of the explosimeter scale.

[b]Top Hatch top loading indicates the loading arm/hatch interface

[c]Pass indicates a tank that is leak tight as defined by the CARB criteria

[d]Fail indicates a tank that has failed the CARB test and therefore leaks in excess of the allowable criteria

[e]Total = Percent of all compartments where leak occured at specific location

[f]For bottom loading a total of 195 hatches were tested, 116 in the pass mode and 79 in the fail mode. For top loading, 260 hatches were tested, with 142 in the pass mode and 188 in the fail mode

[g]N.A. = Not applicable for top loading since compartment loaded with hatch open

[h]N.L. = No leaks detected

Table 3-8. OCCURRENCE OF HYDROCARBON LEAKAGE AT VARIOUS EXPLOSIMETER LEVELS[a]

	Percent of Compartments Where Leak Occurs			Percent of Tanks Where Leak Occurs			Avg. No. of Leaks per Compartment			Percent of all Leaks[b]		
	>0 LEL	≥0.5 LEL	≥1.0 LEL	>0 LEL	≥0.5 LEL	≥1.0 LEL	>0 LEL	≥0.5 LEL	≥1.0 LEL	>0 LEL	≥0.5 LEL	≥1.0 LEL
Top Loading												
Pass[c]	100	89.4	85.9	100	96.0	94.0	1.70	1.05	0.96	53.2	51.0	53.1
Fail[d]	96.6	88.1	84.7	100	97.0	97.0	1.80	1.21	1.02	46.8	49.0	46.9
Bottom Loading												
Pass	19.6	5.2	2.6	42.9	19.0	9.5	0.36	0.07	0.03	25.1	8.5	4.5
Fail	63.5	53.2	39.2	100	100	100	1.58	1.09	0.80	74.9	91.5	95.5

[a]For bottom loading, a total of 41 tanks (195 compartments) were tested, 21 tanks (116 compartments) in the pass mode and 20 tanks (79 compartments) in the fail mode. For top loading, 84 tanks (260 compartments) were tested, with 50 tanks (142 compartments) in the pass mode and 34 tanks (118 compartments) in the fail mode.

[b]Indicates the percent of all leaks at that explosimeter level found at a compartment on a tank in either the pass or fail mode.

[c]Pass indicates a tank that was judged leak tight based upon the field CARB tests.

[d]Fail indicates a tank that failed the field CARB tests and therefore leaked in excess of the allowable criteria.

Table 3-9. PERCENT OF TANKS IDENTIFIED CORRECTLY AT VARYING LEL LEVELS USING THE EXPLOSIMETER METHOD[a]

	Percent of Tanks Judged Correctly At			Percent of Tanks Judged Incorrectly At		
	>0 LEL	≥0.5 LEL	≥1.0 LEL	>0 LEL	≥0.5 LEL	≥1.0 LEL
Pass[b]	57.1	81.0	90.5	42.9	19.0	9.5
Fail[c]	100	100	100	0	0	0
All Tanks[d]	78.0	90.2	95.1	22.0	9.8	4.9

[a]Data for bottom loaded tanks only

[b]Pass = leak tight as defined by the CARB field tests

[c]Fail = tank leaked in excess of the criteria during field tests

[d]Total of all bottom loaded tanks

The success rate of the explosimeter method can be explained in two ways. If a leak were found above a certain LEL level, the success rate could be defined as the percentage of tanks that were actually identified correctly as a leaking tank. For example, as shown in Table 3-8, if a leak registering ≥ 1.0 LEL were discovered on a bottom loaded tank, the tank would be correctly identified as a leaking tank 95.5 percent of the time.

The other success rate definition would be based upon the ability of the method to correctly identify the tank as a leak tight or leaking tank. At the ≥ 1.0 LEL level, as shown in Table 3-9, the explosimeter method correctly identified the tanks 95.1 percent of the time. The method did not overlook any tank that would have violated the leak tight criteria.

The explosimeter method, as used in this study, had a success rate at the ≥ 1.0 LEL level of 95 percent using either definition. The data was more meaningful at bottom loading operations but this does not mean that the method is not applicable to top loading systems. The presence of a leak was still detected, but it was difficult to determine if the violation was caused by the tank truck or the loading apparatus. It should also be noted that the adequacy of the method, and the apparent LEL levels where the method is usable, are based upon the CARB leak criteria. If other criteria are used to define a leak tight truck, the method will have to be re-evaluated to determine the applicable LEL levels to be used as pass/fail criteria.

3.2.6 SONIC DETECTOR

The sonic detector was used in much the same manner as the explosimeter. The hatch covers, P-V vents, vapor collectors and vapor piping were checked for leakage during the loading operation. This unit was used almost exclusively when the previous load was diesel because no volatile gasoline vapors were in the gases being emitted.

The sonic detector test method did not prove to be very useful in the field. The instrument itself worked well in detecting the presence of gas leakage, however, the instrument could not give repeatable results on the relative size of the leakage. The instrument sensitivity and indicator scale would vary with the volume setting of the instrument. On a given constant leak, two people could get two readings based on the volume setting of the instrument and hearing ability of the operator.

However, this instrument and method could become usable if either a calibration method is devised based upon a standard sound level or if the instrument were modified to incorporate several set ranges which in turn could be calibrated.

3.2.7 BUBBLE INDICATION METHOD

The bubble indication method is used by many mechanics during tests to indicate the presence of leaks. This method was incorporated into the shop test procedures and used to indicate the locations of the leak sources. The bubble method proved to be too sensitive in indicating leaks. For example, a vapor hose connected to a tank during a pressure test indicated a leak with a series of extremely small bubbles along the entire length of the hose. The pressure test indicated no leakage at all. The bubble test would also be able to relate relative sizes of leaks only to a limited extent and this would vary with the indicating solution used. This test is also limited to tanks that are subjected to positive pressures only. This method is however, similar to the sonic detector method in that both can be used as an indicator or locator of leaks.

3.2.8 SAN DIEGO "BAG" METHOD

Compliance tests of tank trucks were observed as performed by San Diego Air Pollution Control District (SDAPCD) personnel at a bottom loading terminal in San Diego. As described in Section 3.1,

the tire-bag apparatus was placed over all hatch covers of the tank being loaded. This included putting bags over compartments that were not being loaded but were interconnected through the vapor piping. No leak should occur at the compartment that was not being loaded because the internal valve should be closed, however, if a leak is detected this would indicate a faulty internal valve and the presense of a leak source.

As the truck is loaded, the bag is closely watched to observe any leakage around the hatch. The bags are sized so that the volume escaping is about twice the allowable leak volume based upon a leak decay of 18 inches of water to 17 inches of water in 5 minutes. A violation can then be easily noted by estimating the volume of leakage collected in the bag (or several bags). The bags are placed only over the hatch covers, which include the P-V vents, because this is the most predominant leak source and other leakage areas could be determined during the annual State Certification Test (see CARB pressure test).

The test method has several advantages. The equipment is inexpensive to buy and easy to use. A visual, easily detected violation can be determined. Any leakage around the bag or innertube - truck hatch interface are errors always in favor of the truck. According to SDAPCD personnel, they have a 100 percent success rate on trucks they note as violators. In other words, every truck they have cited for violation has in fact, after a shop test, been found to leak in excess of the allowed rate. The truck must then be maintained to a level to pass the annual requirements again.

This test does have its drawbacks. This method can obviously be used only on bottom loaded trucks. The bag apparatus itself may not be able to fit all tank hatch configurations. Other equipment, such as overfill protectors, tank compartment vapor vent housing, etc., may get in the way and not allow a good seal between the tank

and the bag. However, the bag equipment is somewhat flexible and very inexpensive and bags could be made to fit several configurations. The other drawback is that there are many errors that may be involved and that these are all in the favor of the truck. This means some trucks get by that may actually fail the criteria. The test is now set up so that they do catch the larger violators and have a 100 percent success record for their field procedure.

3.3 PASS/FAIL CRITERIA

The pass/fail criteria selected will obviously be determined by the monitoring technique chosen. Based on the test method evaluation, the methods to be included in this discussion are the explosimeter method, San Diego "Bag" method, the volume leakage method, and the CARB pressure loss rate method.

The explosimeter tests reveal that an LEL limit of 1.0 LEL can be used as a pass/fail value. Using the criteria of allowing no leaks $\geq$ 1.0 LEL, if a reading of 1.0 LEL was found then chances would be very high (95.5%) that the tank would fail the CARB criteria and not one that would pass. This method also would correctly identify all tanks 95.1 percent of the time at the 1.0 LEL level. Also, the method would exclude only a very small percentage (0 percent for the test fleet) of the tanks that were actually in violation.

San Diego APCD personnel have selected pass/fail criteria based upon the allowable pressure loss defined by the CARB certification tests. The volume of vapor that would be lost due to a pressure decrease from 18 inches of water to 17 inches of water is calculated and a loss rate (over the five minute test) can be established. The pass/fail criteria can then be established by determining the margin of error that can be allowed in identifying all the violators. In San Diego, because of the possible errors involved in the method, personnel have selected a volume of vapor lost during loading operations of

twice that allowed by the CARB criteria. SDAPCD has experienced a 100 percent success rate, using this enforcement technique when a leak is found. There is, however, no information on how many violators are not detected by this method. The pass/fail criteria for this screening method is therefore dependent upon the definition of a leak tight truck.

The pass/fail criteria selected for the volume leakage test will depend upon the allowable leakage that defines a leak tight truck. The leak tightness of the tank can be defined as a percentage of the total vapors transferred and an acceptable leakage rate can be selected. For example, if a tank vapor volume of 5,000 gal (670 ft^3) and a loading rate of 500 gallons per minute (67 CFM) is assumed, a pass/fail limit can be determined dependent upon the vapor containment necessary. If a containment of 99 percent is required, the allowable leakage can be calculated as follows:

(vapor volume flow rate) (1-containment required)
= Allowable volume leakage rate

For this example, the allowable volume leakage would be:

$$(67\ ft^3/min)\ (60\ min/hr)\ (1-0.99) = 40.2\ ft^3/hr$$

By referring to Figure 3-7, this rate can be compared with the CARB leak rate criteria. For those trucks tested, the corresponding pressure leak rate would range from 0.25 inches of water to 0.65 inches of water in 1 minute (or 1.25 inches of water to 3.25 inches of water in 5 minutes). Table 3-10 shows several corresponding volume leakage rates for various containment requirements, with the corresponding pressure loss rate, based upon the field test data.

Table 3-10. VOLUME LEAKAGE RATE REQUIRED FOR VARIOUS VAPOR CONTAINMENT REQUIREMENTS[a]

Required Vapor Containment, Percent	Volume Leakage Rate, SCFH	Corresponding CARB Pressure Loss Rate, in H_2O/5 Minutes[b]			
		9 in H_2O	12 in H_2O	15 in H_2O	18 in H_2O
90	402.0	28.3	23.0	20.3	23.0
95	201.0	14.3	11.5	10.3	10.8
98	80.4	5.5	4.3	3.8	3.0
99	40.2	3.3	2.5	2.3	1.3

[a] Based upon a tank volume of 5,000 gallons and a loading rate of 500 GPM

[b] See Figure 3-7, data based upon tanks tested during field test phase.

References for Section 3.0

1. Control of Hydrocarbons From Tank Truck Gasoline Loading Terminals, EPA Guideline Series, EPA-H50/2-77-026, October 1977.

2. Leak Testing of Gasoline Tank Trucks, Scott Environmental Technology, EPA Contract No. 68-02-2813, Work Assignment No. 19, August 1978 (Draft).

3. Personal communication with Dean Simeroth, California Resources Board, Sacramento, California.

4. Ibid

4.0 CONCLUSIONS

4.1 VAPOR CONTAINING EQUIPMENT AND MAINTENANCE

Vapor containing equipment is available to either eliminate or minimize hydrocarbon vapor leakage from delivery tanks and from bulk plant and terminal vapor piping. Test data indicates that the type of equipment selected or age of equipment was not as much a factor as the maintenance required to keep the equipment in good working order. How long the equipment will remain controlling vapors in a leak tight manner is unknown, but with a proper maintenance program some tanks have shown leak tightness maintained for over 4 months.

The CARB certification program specifies testing the trucks annually. However, the program may be more meaningful if the trucks were tested more often; e.g., either semi-annually or quarterly. Some truck fleet operators stated that they would be willing to test the tanks more often than the current annual test but they felt also that the degree of leak tightness required by the CARB program should be reduced.

4.2 COSTS OF MAINTAINING VAPOR TIGHT CONDITIONS

The normal annual cost for product delivery maintenance is $1920 per truck. Annual recertification of trucks to a leak tight condition would require an additional cost per truck of $130-$280 annually. The range of costs are due to the level of vapor tightness desired (i.e. 3 inches of water in 5 minutes or 1 inch of water in 5 minutes). If recertification were required semi-annually, the additional costs would range from $270-$560 per year per truck. The additional costs would range from $540-$1120 per year per truck if recertification were required quarterly. The truck fleet operators interviewed felt requiring certification more often than

quarterly would not be realistic because of the time required to certify a truck fleet and the scheduling and delivery adjustments that would be required.

4.3 MONITORING PROCEDURES

Of the eight monitoring procedures studied, only four appear to show promise as an acceptable procedure. These include the explosimeter method, San Diego Bag method, the CARB pressure loss rate method, and the volume leakage method. The other methods studied include the quick leak decay method, sonic detector method, bubble indication method, and the V/L ratio method. The quick leak decay was evaluated using gasoline as the pressurizing liquid because diesel is not available at all facilities. The quick leak decay method would take too long to reach stabilizing pressures to act as a quick monitoring method. The sonic detector indicated the presence of leaks but because of the way the instrument was used no relative sizing of the leaks could be obtained on a repeatable basis. The bubble indication method also worked very well at identifying leakage areas but also could not be used to determine the relative size of the hydrocarbon leaks. This method also often detected insignificant leaks. The data for the V/L method indicates that there was no correlation between V/L test results and the leak tight condition of the truck,thereby eliminating it, as used, as a possible compliance method.

Of the tests yielding acceptable results, either of the two shop tests, the CARB test or the volume leakage test, could be used as the compliance test. The volume leakage test is based upon actual vapor volumes emitted to the atmosphere but this determination requires slightly more time and equipment than the CARB test. Either of the short monitoring methods, the explosimeter test or San Diego Bag test could be used as an interim enforcement or screening procedure. These short methods could be used to

monitor loadings and determine violators, and in turn would require the leaks to be minimized as specified by the shop test selected.

4.4 PASS/FAIL CRITERIA

Pass/fail criteria for leaks emanating from the tank trucks will depend upon the degree of leak tightness defined in the shop test. Pass/fail criteria have been developed based upon the existing CARB leak tight definition of allowing a pressure decrease of 2 inches of water in 5 minutes (from 18 inches of water to 16 inches of water). San Diego has developed pass/fail criteria using the bag method. A criteria could be developed using 1.0 LEL with the explosimeter method. If another definition of leak tight were developed using volume leakage rate criteria or pressure loss rate criteria, pass/fail criteria for the screening methods would have to be modified.

For other leakage areas not involving the delivery tank, pass/fail criteria can be established. From vapor piping to the storage tanks, no hydrocarbon leakage would be allowed to occur as indicated with either an explosimeter, a sonic detector or a bubble indication solution. No hydrocarbons as indicated by an explosimeter should leak from a fixed roof storage tank pressure-vacuum vent if the storage tank pressure is below the vent open setting. No leakage should occur from vapor couplers as indicated by an explosimeter or bubble indication solution.

APPENDIX A

SUGGESTED MONTHLY VISUAL MAINTENANCE INSPECTION CHECKLIST

APPENDIX A

SUGGESTED MONTHLY VISUAL MAINTENANCE INSPECTION CHECKLIST

TANK TRUCK OPERATOR -- (To be performed on each truck)

1. Inspect hatch cover for integrity of gasket and seal surfaces. The dome lid may be damaged or warped and should be checked for the quality of the seal. Two methods are suggested. The gasket or seal on the dome lid can be coated with a grease or other easily visible material and the dome lid closed, sealed, and reopened. The inability of the dome lid to close or seal around the entire circumference can then be clearly visible by showing gaps in the indicating material on the mating surface.

   The other method, suggested by a tank truck operator, would be to use a piece of thin paper placed between the dome lid and the base ring with the dome lid closed securely. If the paper can then be moved, the seal is not tight enough and a leak will most likely occur.

   The dome lid gasket should be visually checked for excessive cracking or for debris or foreign material on the mating surface. The gasket should be cleaned or replaced as required.

2. Inspect P-V valve seals for debris or foreign material on seat. Check valve operation to ensure valve will move smoothly without sticking or rubbing and will reseat properly.

3. Inspect condition of the hatch base ring for severe damage or warpage. The bolts and/or clamps used to attach the base ring to the tank should also be tested for tightness.

4. Inspect condition of compartment vapor vent covers especially if covers are the flanged bolted type or the rubber boot type. Inspect flange bolts for tightness and/or inspect rubber boots for cracks or tears.

5. Inspect vapor recovery piping. If rubber hoses are used, check the hoses for tears or cracks and check the tightness of any connector clamps.

6. Inspect couplers for damage or wear which will not allow the coupler to close properly. Check the coupler gaskets also for excessive wear or damage.

7. Inspect vapor and liquid transfer hoses for cracks, tears or excessive wear or damage. Check hose to coupler clamps for tightness.

For all items above, repair or replace excessively worn or damaged parts as required.

BULK PLANT AND TERMINAL OPERATORS

1. Inspect all gasoline delivery tanks as described above.

2. Inspect loading rack vapor and liquid couplers for signs of wear, damage or liquid leakage. Check flexible vapor hoses (if applicable) for cracks, tears, or damage. Check all hose clamps for tightness.

3. Inspect above ground vapor piping using a bubble indicating solution. Check all piping connections and joints with the solution and look for signs of damage to the rigid piping.

4. For fixed roof storage tanks, inspect the condition of the pressure-vacuum vents. Be sure that the valves are seated or can be seated properly and that the valves can move freely in the valve guides. Check to make sure all valve seats are clean and free of debris.

5. For top loading arms, use an explosimeter or bubble indication solutions to identify leaks at the loading arm swivels and joints. Check any tapered rubber loading arm hatch sealing mechanisms for signs of damage or excessive wear.

Repair or replace damaged components as required.

SERVICE STATION OPERATORS

1. Inspect vapor couplers used for vapor transfer to underground storage tanks. Check valve seats to make sure they are clean and free of debris and foreign material.
2. Inspect vapor hoses (if applicable) as stated above.

APPENDIX B

ACTUAL MAINTENANCE PERFORMED ON DELIVERY TANKS DURING FIELD TEST PHASE

APPENDIX B

ACTUAL MAINTENANCE PERFORMED ON SELECTED DELIVERY TANKS DURING FIELD TEST PHASE

Truck/63806

Degassed, start 1030 - end 1145

Dome No. 1 - bad leak at lid seal

Dome No. 2 - smaller leak at lid seal

Dome No. 2 - high level shutoff also loose

(1 man -- 9 minutes)

Nos. 1 and 2 -- straightened the hatch bases and adjusted the lid spring tension. Tightened the high level shutoff (for bottom loading)

Trailer/53306

Degassed, start 1200 - end 1415

No. 3 has bad leak at dome lid

(1 man -- 4 minutes)

Straightened base, adjusted spring tension and tightened base ring.

Truck/63765, Trailer/53304 6/23/78

Truck degassed, start 0615 - end 0720

Trailer degassed, start 0730 - end 0930

Truck - No maintenance

Trailer - No maintenance

Passed CARB test

Truck/63804

No. 2 dome lid leak - adjust tension

No. 3 dome lid leak - adjust tension and straightened hatch

(1 man -- 5 minutes)

Passed CARB test after maintenance

Trailer/53307

No. 3 tightened base ring, replaced base ring and gasket

No. 1 dome lid leak - adjust tension

(1 man -- 10 minutes)

Passed CARB test after maintenance

Trailer/53304 6/19/78

No. 3 dome lid leaking, cannot get over 1 inch H_2O

(1 man -- 17 minutes)

Nos. 1 and 2 also leaking, adjust spring tension of lid

No. 3 straightened out hatch and adjust spring tension, replace gasket in vapor recovery outlet

Passed CARB test after maintenance

Truck/63765 6/19/78

Nos. 1 and 2 dome lid leaking, straightened dome lids and adjusted spring tension

(1 man -- 8 minutes)

Passed CARB test after maintenance

Truck/63804

Degassed 10 minutes for each compartment

No. 1 vent missing, replace

(1 man -- 5 minutes)

Only truck tank tested because of time limitations, truck only degassed for 10 minute/compartment, complete stabilization not achieved because of time limitation, vaccum test -- 6.12 to 6.28 inches H_2O in 5 minutes -- invalid since not stabilized

Trailer/53297, Truck/63803

Degas, start 0630 - end 0805 (on trailer)

Degas, start 0815 - end 1050 (on truck)

Maintenance/trailer -- all three covers leaked, adjust tension

and spring clamps, No. 3 has bent dome lid, also tightened high level shutoff, start 0824 - end 0846
Maintenance/truck -- leak at hose clamp on vapor return hose, replace clamp (1 man -- 5 minutes), dome covers adjusted after EPA Volume Leakage test
Passed CARB test after maintenance

Truck/63767
No. 1 cover leaking, upon adjusting spring tension a bolt broke, must replace dome lid
(1 man -- 19 minutes)

Trailer/53345
No. 1 cover leaks, tighten base ring and adjust spring tension on cover, (5 minutes -- 1 man)
Blew the rubber boot off of No. 1 collector at 23 inches H_2O
(3 minutes -- 1 man)
No testing done pre-maintenance

Truck/68-275, Trailer/68-275

Maintenance for CARB Certification 9:10 to 10:30
Previous load diesel - old CB equipment
Bad leak compartment No. 3 vent, detectable by smell, ear, feel, leak due to small 1/8 inch diameter rock in seal. Repaired by cleaning vent/seal 9:10 to 9:30
Repressurize to find more leaks 9:30-9:40
18 inch to 15 inch in 5 minutes (1 inch too much drop), 6 medium/small leaks found, pressure and vacuum valves in each compartment, repaired--started 9:40 to 10:00; pressure valves seal, compartment No. 1, small 1/8 inch rock in seal, pressure valves seal, compartment No. 3; replace both, all other 4 valves cleaned

Repressurize to find more leaks, 10:00 to 10:10
18 inch to 15.1 inch in 5 minutes
Three small leaks found, compartment No. 1, pressure valve; compartment No. 2, screw threads on vacuum valve; compartment No. 3, vacuum valve still leaks
Repaired, start 10:10 to 10:20, replaced domes in compartments Nos. 1 and 3 with brand new domes, leaked approximately 3 inches in 3 minutes 10:20-10:30
Decision: Will fail CARB certification until new domes are purchased and installed.
Note: Did not pass CARB test after maintenance completed.

Truck/67-182
Maintenance 1250 - 1350
Replaced vent dome cover Nos. 1, 3, and 5 leak very badly and Nos. 2 and 4 not as bad
1250 - maintenance started (2 minutes)
1350 - end maintenance
One of the vapor hoses has minute seeping leaks of the full length of the base, new hose with a new material cover, many leaks but total volume not significant
Passed CARB test after maintenance

APPENDIX C
SUGGESTED ENFORCEMENT INSPECTION CHECKLIST

APPENDIX C

SUGGESTED ENFORCEMENT INSPECTION CHECKLIST

GASOLINE DELIVERY TANKS -- (Based on explosimeter method and 1.0 LEL leak criteria)

While the delivery tank is being loaded, check the following with an explosimeter:

- Dome lid/base ring interface
- Base ring/tank interface
- P-V vent
- Compartment vapor vent cover
- Vapor piping
- Vapor couplers
- Vapor transfer hoses

Any reading $\geq$ 1.0 LEL constitutes a violation.

BULK PLANT AND TERMINALS

Check the following with an explosimeter:

- Vapor piping
- Vapor tight couplers

Any explosimeter reading constitutes a violation.

P-V vents on fixed roof storage tanks should be inspected to determine if they are seated properly. Vent valves should be tested to determine if they open and close smoothly.

SERVICE STATIONS

During gasoline transfers, vapor couplers should be checked with an explosimeter. Any indication of a leak shall constitute a violation.

In all instances, the inspector should note the condition of the vapor containing equipment and give suggestions on required maintenance necessary to bring the violation into compliance.

TECHNICAL REPORT DATA
(Please read Instructions on the reverse before completing)

1. REPORT NO. EPA-450/3-79-018	2.	3. RECIPIENT'S ACCESSION NO.
4. TITLE AND SUBTITLE Evaluation of Vapor Leaks and Development of Monitoring Procedures for Gasoline Tank Trucks and Vapor Piping		5. REPORT DATE April 1979
		6. PERFORMING ORGANIZATION CODE
7. AUTHOR(S) Robert L. Norton		8. PERFORMING ORGANIZATION REPORT NO.
9. PERFORMING ORGANIZATION NAME AND ADDRESS Pacific Environmental Services, Inc. 1930 14th Street Santa Monica, California 90404		10. PROGRAM ELEMENT NO.
		11. CONTRACT/GRANT NO. 68-02-2606 Task No. 11
12. SPONSORING AGENCY NAME AND ADDRESS U.S. Environmental Protection Agency Office of Air Quality Planning and Standards Emission Standards and Engineering Division Research Triangle Park, N.C. 27711		13. TYPE OF REPORT AND PERIOD COVERED
		14. SPONSORING AGENCY CODE

15. SUPPLEMENTARY NOTES
EPA Project Officers: Nancy McLaughlin, Emission Measurement Branch
Stephen A. Shedd, Chemical and Petroleum Branch

16. ABSTRACT

This technical document provides information on control techniques, monitoring procedures and costs for maintaining gasoline tank trucks and vapor piping in "vapor tight" conditions. The leak sources and evaluation of different low cost and quick monitoring and test procedures are also discussed. This document provides the support information for the Office of Air Quality Planning and Standards guideline series document entitled "Control of Volatile Organic Compound Leaks from Gasoline Tank Trucks and Vapor Collection Systems," EPA-450/2-78-051, December 1978.

17. KEY WORDS AND DOCUMENT ANALYSIS

a. DESCRIPTORS	b. IDENTIFIERS/OPEN ENDED TERMS	c. COSATI Field/Group
Air Pollution Gasoline Vapor Control Systems Gasoline Tank Trucks Bulk Plants Service Stations Bulk Terminals Leak Monitoring	Air Pollution Control Stationary Sources Mobile Sources Hydrocarbon Emissions	

18. DISTRIBUTION STATEMENT Unlimited	19. SECURITY CLASS (This Report) Unclassified	21. NO. OF PAGES 94
	20. SECURITY CLASS (This page) Unclassified	22. PRICE

EPA Form 2220-1 (Rev. 4-77) PREVIOUS EDITION IS OBSOLETE