ORNL

Oak Ridge National Laboratory

Operated by Union Carbide Corporation for the Department of Energy Oak Ridge, Tennessee 37830

ORNL/EIS-148

EPA

United States Environmental Protection Agency

Office of Toxic Substances Washington, DC 20460

EPA-560/2-78-006

INVESTIGATIONS OF SELECTED ENVIRONMENTAL POLLUTANTS: 1,2-DICHLOROETHANE

This report was prepared as an account of work sponsored by an agency of the United States Government. Neither the United States Government nor any agency thereof, nor any of their employees, contractors, subcontractors, or their employees, makes any warranty, express or implied, nor assumes any legal liability or responsibility for any third party's use or the results of such use of any information, apparatus, product or process disclosed in this report, nor represents that its use by such third party would not infringe privately owned rights.

This report has been reviewed by the Office of Toxic Substances, U.S. Environmental Protection Agency, and approved for publication. Approval does not signify that the contents necessarily reflect the views and policies of the U.S. Environmental Protection Agency, nor does mention of trade names or commercial products constitute endorsement or recommendation for use.

ORNL/EIS-148
EPA-560/2-78-006

Contract No. W-7405-eng-26

Information Division

INVESTIGATIONS OF SELECTED ENVIRONMENTAL POLLUTANTS: 1,2-DICHLOROETHANE

John S. Drury and Anna S. Hammons

Health and Environmental Studies Program
Information Center Complex

Work sponsored by the Office of Toxic Substances, U.S. Environmental Protection Agency, Washington, D.C., under Interagency Agreement No. D7-0151.

Project Officers

Charles M. Auer
James P. Kariya

Date Published: April 1979

OAK RIDGE NATIONAL LABORATORY
Oak Ridge, Tennessee 37830
operated by
UNION CARBIDE CORPORATION
for the
DEPARTMENT OF ENERGY

CONTENTS

Figures vii
Tables. ix
Preface xi
Abstract. xiii
1. Summary and Conclusions 1
2. Physical and Chemical Properties. 15
2.1 Nomenclature, Formula, and Structure 15
2.2 Physical Properties. 16
2.3 Chemical Properties. 17
2.4 Contaminants and Characteristics of the Commercial Product. 19
3. Production and Uses 20
3.1 Production Methods 20
3.1.1 Direct Chlorination 20
3.1.2 Oxychlorination 21
3.1.3 Balanced Process. 21
3.2 Producers, Production Capacities, and Production Sites . . 22
3.3 Annual Production, Market Prices, and Market Trends. . . . 24
3.4 Uses 27
3.4.1 Major 28
3.4.2 Minor 29
3.4.3 Discontinued. 30
4. Sources and Levels of 1,2-Dichloroethane in the Environment . . 31
4.1 Potential Sources of Environmental Contamination 31
4.1.1 Manufacture of End Products 31
4.1.2 Synthesis of 1,2-Dichloroethane 37
4.1.2.1 Direct Chlorination. 37
4.1.2.2 Oxychlorination. 38
4.1.3 Dispersive Uses 40
4.1.4 Storage and Distribution. 48
4.1.5 Potential Inadvertent Production in Other Industrial Processes. 48
4.1.6 Potential Inadvertent Production in the Environment 48
4.1.7 Control Practices Currently Used. 49
4.2 Monitoring Data. 50
4.2.1 Air 51
4.2.2 Water 52
4.2.3 Biota 72
5. Environmental Characteristics 73
5.1 Chemical and Physical Interactions 73
5.1.1 Oxidation and Photolysis. 73
5.1.2 Hydrolysis. 75
5.1.3 Adsorption. 75
5.1.4 Evaporation 75
5.2 Bioaccumulation, Biomagnification. 76
5.3 Biological Degradation 77
5.4 Environmental Transport. 77

6. Biological Aspects in Humans 79
6.1 Metabolism. 79
6.1.1 Uptake and Absorption. 79
6.1.2 Transport, Distribution, Transformation, and Elimination. 79
6.2 Effects 80
6.2.1 Toxicity 80
6.2.1.1 Acute 80
6.2.1.2 Chronic 81
6.2.1.3 Poisoning Incidents and Case Histories. . 82
6.2.1.4 Epidemiology. 83
6.2.2 Carcinogenicity, Mutagenicity, and Teratogenicity. 85
6.2.3 Other. 85
7. Biological Aspects in Nonhuman Mammals 87
7.1 Metabolism. 87
7.1.1 Uptake and Absorption. 87
7.1.2 Distribution, Transformation, and Elimination. . . 87
7.2 Effects 89
7.2.1 Toxicity 89
7.2.2 Carcinogenicity. 96
7.2.3 Mutagenicity 104
7.2.4 Teratogenicity 105
8. Biological Aspects in Other Vertebrates. 106
8.1 Metabolism. 106
8.2 Effects 106
9. Biological Aspects in Invertebrates. 108
9.1 Metabolism. 108
9.2 Effects 108
9.2.1 Toxicity 108
9.2.2 Mutagenicity 116
10. Biological Aspects in Plants 119
10.1 Metabolism 119
10.2 Effects. 120
11. Biological Aspects in Microorganisms 124
11.1 Metabolism 124
11.2 Effects. 124
11.2.1 Bacteria, Viruses. 124
11.2.2 Fungi. 127
11.2.3 Nematodes. 128
11.2.4 Algae. 128
12. In Vitro and Biochemical Studies 130
13. Analytical Methods and Monitoring Techniques 132
13.1 Chloride Analysis. 132
13.2 Colorimetry. 133
13.3 Direct-Reading Detector Tubes. 133
13.4 Halide Meters. 134
13.5 Infrared Spectrometry. 134
13.6 Gas Chromatography 135
13.7 Monitoring Techniques. 136

14. Regulations and Standards. 138
14.1 Current Regulations. 138
14.1.1 Food, Drug, and Pesticide Authorities. 138
14.1.2 Air and Water Acts 139
14.1.3 Occupational Safety and Health Regulations . . . 139
14.1.4 U.S. Department of Transportation. 140
14.1.5 Foreign Countries. 140
14.2 Consensus and Similar Standards. 141
14.2.1 American Conference of Governmental Industrial Hygienists 141
14.2.2 American National Standards Institute. 141
14.3 Current Handling Practices 142
14.3.1 Handling, Use, Transport, and Storage. 142
14.3.2 Spills and Leakage 143
14.3.3 Respiratory Protection 144
14.3.4 Accidents. 144
Appendix. 145
Bibliography. 153

FIGURES

1 Manufacture of 1,2-dichloroethane by direct chlorination of ethylene. 20

2 Simplified flow diagram of 1,2-dichloroethane production by the oxychlorination process 22

3 Arrangement of direct chlorination and oxychlorination facilities in the balanced process. 23

4 Balanced chlorination process for producing 1,2-dichloroethane. 23

5 Locations of 1,2-dichloroethane plants. 25

6 Production trends for 1,2-dichloroethane, 1954-78 26

7 1,2-Dichloroethane cracking process for vinyl chloride production. 32

8 Environmental pollutants arising from manufacture of vinyl chloride monomer in a typical chlorination process. 36

9 Losses of 1,2-dichloroethane to the media by the direct chlorination process. 39

10 Losses of 1,2-dichloroethane to the media by the oxychlorination process 40

11 Industrialized areas sampled. 69

TABLES

1 Physical properties of 1,2-dichloroethane 18

2 Producers of 1,2-dichloroethane (1977). 24

3 Population living within 5 miles of plants producing 1,2-dichloroethane. 25

4 U.S. exportation of 1,2-dichloroethane, 1970-74 27

5 Consumption of 1,2-dichloroethane in the United States, 1968-74 28

6 Typical material balance for vinyl chloride monomer production via balanced ethylene process 33

7 Estimated emissions of 1,2-dichloroethane based on 1974 U.S. production of 4218 million kilograms. 34

8 Emissions report for 1,2-dichloroethane, June 1977. 35

9 Composition of wastewater from a typical manufacturing facility using the direct chlorination process. 38

10 Environmental pollutants arising from the manufacture of 1,2-dichloroethane by typical chlorination and hydrochlorination processes. 41

11 Estimates of 1,2-dibromoethane exposures from self-service gasoline pumping. 46

12 Monitoring data of 1,2-dibromoethane in urban areas 46

13 Summary of human exposures to atmospheric 1,2-dibromoethane from emission sources 47

14 Cost data for scrubbers and condensers for control of 1,2-dichloroethane emissions. 49

15 Cost data for the control of 1,2-dichloroethane by incineration. 50

16 Water quality data from the National Organics Reconnaissance Survey. 54

17 Water utilities studied in the National Organics Reconnaissance Survey. 60

18 Summary of findings, National Organic Monitoring Survey, March 1976 through January 1977 63

19 1,2-Dichloroethane in potable water supplies, National Organic Monitoring Survey, March 1976 through January 1977. . 65

20 Concentration of 1,2-dichloroethane in surface waters from industrial areas. 70

21 Correlation of symptoms, exposure time, and concentration for guinea pigs inhaling 1,2-dichloroethane 90

22 Mortality after single acute exposure to 1,2-dichloroethane by inhalation. 91

23 Lethal doses of 1,2-dichloroethane to nonhuman mammals. 92

24 Terminal survival of rats in experimental and control groups involved in carcinogenicity studies with 1,2-dichloroethane . 98

25 Squamous-cell carcinomas of the forestomach in 1,2-dichloroethane-treated rats 99

26 Hemangiosarcomas in 1,2-dichloroethane-treated rats 99

27 Adenocarcinomas of the mammary gland in 1,2-dichloroethane-treated female rats 100

28 Terminal survival of mice in experimental and control groups involved in carcinogenic studies with 1,2-dichloroethane. . . 101

29 Hepatocellular carcinomas in 1,2-dichloroethane-treated mice. . 102

30 Alveolar/bronchiolar adenomas in mice treated with 1,2-dichloroethane. 103

31 Squamous-cell carcinomas of the forestomach in 1,2-dichloroethane-treated mice 103

32 Lethal concentrations of 1,2-dichloroethane for selected invertebrates 109

33 Lethal concentrations for selected invertebrates of mixtures containing 1,2-dichloroethane 115

PREFACE

This review is a product of the Health and Environmental Studies Program, Information Center Complex, Information Division, Oak Ridge National Laboratory. It was prepared for the Office of Toxic Substances, U.S. Environmental Protection Agency (EPA), in partial fulfillment of an interagency agreement to review environmental effects of selected pollutants. Information provided will be used in the development of regulations for hazardous materials. Most of the approximately 250 cited references were collected during the first quarter of 1978, but updating of some reference material occurred subsequent to the EPA review of the manuscript in September 1978.

The authors are indebted to Gerald U. Ulrikson, manager of the Information Center Complex, for his support during the preparation and revision of this review. The advice and support of Charles M. Auer and James P. Kariya, EPA project officers, and the cooperation of the Toxicology Information Response Center, the Environmental Mutagen Information Center, the Environmental Teratology Information Center, and the Energy and Environmental Response Center of the Information Center Complex are gratefully acknowledged. The authors also thank Patricia Hartman and Donna Stokes, typists, and Carol McGlothin, editor, for preparing the manuscript for publication.

ABSTRACT

This study is a comprehensive, multidisciplinary review of the health and environmental effects of 1,2-dichloroethane. Other pertinent aspects such as production, use, methods of analysis, and regulatory restrictions are also discussed. Approximately 250 references are cited.

1,2-Dichloroethane is manufactured in greater tonnage than any other chlorinated organic compound; in 1977 nearly 5 million metric tons was synthesized in the United States. It is used primarily as a raw material in the production of vinyl chloride monomer and a few other chlorinated organic compounds. 1,2-Dichloroethane does not occur naturally. The environment is exposed to this chlorinated hydrocarbon primarily through manufacturing losses. Smaller exposures occur through dispersive uses such as grain fumigations and application of paints and other coatings and through storage, distribution, and waste disposal operations. Concentrations of 1,2-dichloroethane in environmental air and water distant from point sources are small — on the order of parts per billion or less. Concentrations in the environment near point sources are unknown.

1,2-Dichloroethane rapidly photooxidizes in air and apparently does not accumulate in the environment. It does not bioconcentrate or biomagnify. However, the chlorinated hydrocarbon is appreciably toxic to humans, other vertebrates and invertebrates, plants, and microorganisms. The ingestion of as little as 1 or 2 oz of liquid is usually fatal to humans, and inhalation of 4000 ppm for 1 hr causes serious illness. 1,2-Dichloroethane is an established carcinogen in rats and mice exposed by oral intubation. It is also a weak mutagen in some bacteria and certain grains.

1,2-Dichloroethane appears to pose little environmental risk to the population distant from point sources, but more information is needed to assess risks near point sources and to those parts of the population exposed to dispersive uses of the compound.

1. SUMMARY AND CONCLUSIONS

1.1 INTRODUCTION

1,2-Dichloroethane is a synthetic organic compound initially produced by Dutch chemists in 1795. Little used for more than a century, it is now extensively employed as a raw material in the production of vinyl chloride and is manufactured in greater tonnage than any other chlorinated organic compound.

1.2 PHYSICAL AND CHEMICAL PROPERTIES

1.2.1 Physical Properties (Sect. 2.2)

1,2-Dichloroethane (ethylene dichloride) is a saturated aliphatic hydrocarbon that should be distinguished from a common unsaturated industrial solvent, dichloroethylene. 1,2-Dichloroethane is a colorless, oily liquid that has a sweet taste, a chloroformlike odor, and a volatility similar to gasoline. It boils at 83.47°C, melts at -35.36°C, and has a density of 1.2351 at 20°C. 1,2-Dichloroethane is a powerful solvent for fats, greases, waxes, unvulcanized rubber, resins, and many other organic compounds; it is completely miscible with most common organic solvents but has only limited solubility in water. Vaporized 1,2-dichloroethane is readily flammable; however, the liquid has a relatively high ignition temperature, 413°C, and burns poorly. At 25°C and 760 torr a concentration of 1 ppm 1,2-dichloroethane in air corresponds to 4.05 mg/m^3 or 4.05 μg/liter.

1.2.2 Chemical Properties (Sect. 2.3)

Dry 1,2-dichloroethane is stable at room temperature but decomposes slowly when exposed to air, moisture, and light. The decomposing liquid becomes darker in color and progressively acidic and can corrode iron or steel containers; however, decomposition can be completely inhibited by adding a small amount of alkylamine. All commercial grade product is normally treated in this manner.

Both chlorine atoms in 1,2-dichloroethane are reactive and can be displaced thermally or by other substituents. The economic importance of 1,2-dichloroethane is based in part on the ease with which hydrogen chloride can be removed from the molecule by thermal cracking (Sect. 3.1.2). The bifunctional nature of 1,2-dichloroethane also makes it useful in the manufacture of condensation polymers as well as ethylenediamine and may be the reason for the increased mutagenic effectiveness of the solvent (Sect. 10.2).

1.3 PRODUCTION AND USES (Sect. 3)

1,2-Dichloroethane is manufactured by treating ethylene with chlorine gas (direct chlorination process) or with oxygen and hydrogen chloride (oxychlorination process). Nearly all U.S. manufacturers use a combination of both methods (balanced process) in which production is split almost equally between each process. Use of the balanced process is economically attractive because this arrangement allows manufacturers to recycle the hydrogen chloride that results when 1,2-dichloroethane is converted to the principal product, vinyl chloride monomer.

1,2-Dichloroethane is produced in the United States by 11 manufacturers in 17 production facilities, most of which are concentrated in Texas and Louisiana along the Gulf Coast. In 1977 the combined annual capacity of these plants was about 6.35 million metric tons; however, the plants operated at less than full capacity, and actual production amounted to only 4.75 million metric tons.

Most of this 1,2-dichloroethane was used to synthesize vinyl chloride monomer and a few other chlorinated organic compounds. In 1976 the major uses were vinyl chloride monomer, 86%; methyl chloroform, 3%; ethyleneamines, 3%; trichloroethylene, 2%; and perchloroethylene, 2%. About 2% of the production in that year was used to formulate lead scavengers for gasoline.

Minor uses of 1,2-dichloroethane are not well known. On the basis of the best available information, the 1977 consumption of 1,2-dichloroethane for minor uses was estimated at about 5 million kilograms, or slightly less than 0.1% of the total annual U.S. production. The most

important minor uses in 1977 were manufacture of paints, coatings, and adhesives, 28%; extracting oil from seeds, treating animal fats, and processing pharmaceutical products, 23%; cleaning textile products and polyvinyl chloride manufacturing equipment, 19%; manufacture of polysulfide compounds, 11%; grain fumigation, 10%; and miscellaneous, 9%. The following uses, often cited in the literature, are now considered obsolete or rarely used: upholstery and carpet fumigant, soap and scouring compound ingredient, wetting and penetrating agent, and degreasing fluid. No current cosmetic or drug uses are known.

1.4 ENVIRONMENTAL EXPOSURE FACTORS (Sect. 4)

The environment is exposed to 1,2-dichloroethane primarily through losses occurring during the manufacture of 1,2-dichloroethane and its end products. Smaller exposures occur through dispersive uses of products containing the halogenated hydrocarbon, such as fumigants, paints, coatings, and adhesives, and through storage, distribution, and waste disposal operations. Based on process stream compositions and engineering considerations, manufacturing losses of 1,2-dichloroethane to the environment are estimated to exceed 50 million kilograms (1% of production) annually. Of the three principal manufacturing operations, losses are greater from the oxychlorination process than from the direct chlorination process; they are least from the synthesis of vinyl chloride monomer. More than half of all manufacturing losses of 1,2-dichloroethane escapes to air, more than one-fourth occurs in aqueous wastes, and about 14% is contained in solid wastes.

Despite large aerial losses of 1,2-dichloroethane from manufacturing operations, the average concentration of 1,2-dichloroethane in air distant from point sources is generally too low to be detected by sensitive analytical methods. Concentrations of 1,2-dichloroethane in the air near point sources are unknown. One calculation of the concentration of 1,2-dichloroethane downwind from a manufacturing operation indicated relatively low levels of the compound, but adequate monitoring data supporting this calculation are not yet available. The absence of aerial monitoring data near point sources of 1,2-dichloroethane is the chief impediment to

a realistic assessment of the environmental impact of this chlorinated organic compound.

Liquid wastes from direct chlorination and oxychlorination processes result chiefly from scrubbing gases or crude product with water or caustic solutions. These wastes are generally processed to remove 1,2-dichloroethane before ultimate disposal in surface waters and streams. Generally, concentrations of 1,2-dichloroethane in water samples from U.S. industrialized river basins are low, near 1 ppb, although values up to 100-fold higher occur occasionally. Although the average concentration of 1,2-dichloroethane in U.S. surface waters is low, monitoring of streams near point sources is needed to assure that short-term fluctuations of appreciably greater magnitude do not sometimes occur.

Based on limited data, it appears that 1,2-dichloroethane is not usually present in subterranean waters and is only occasionally present in municipal raw-water supplies at the parts-per-billion level. It occurs with somewhat greater frequency in municipal finished-water supplies, apparently as a result of chlorine treatment.

Solid wastes occur chiefly as heavy ends or EDC-tar from the direct chlorination, oxychlorination, and vinyl chloride monomer processes. These wastes may contain large amounts of 1,2-dichloroethane and are probably the most hazardous process wastes associated with vinyl chloride production, although not necessarily because of their 1,2-dichloroethane content. In the United States, disposal of heavy ends is usually by burial in a landfill or by incineration. The latter option may result in considerable air pollution if not controlled because the resulting combustion products include both chlorine and hydrogen chloride. Because of its volatility, 1,2-dichloroethane contained in buried wastes may be expected to eventually leak into the atmosphere. At present, no relevant monitoring data exist by which to judge the environmental impact of 1,2-dichloroethane from this source.

1.5 ENVIRONMENTAL EFFECTS (Sect. 5)

Although some well-known chlorinated hydrocarbons, such as DDT and polychlorinated biphenyl (PCB), have high persistence in the environment,

there is no evidence to suggest that 1,2-dichloroethane poses a similar problem. 1,2-Dichloroethane is relatively stable in water, but it evaporates rapidly to the atmosphere, where it is destroyed by photooxidation. 1,2-Dichloroethane is thus unlikely to accumulate in the environment. It should be noted, however, that one of the photooxidative products of 1,2-dichloroethane is chloroacetyl chloride, which may be sufficiently stable to reach the stratosphere and interact destructively with the ozone layer. 1,2-Dichloroethane does not bioaccumulate in food chains in the marine environment, and no firm evidence now exists to support bioaccumulation in other biota.

Two schools of thought exist regarding the possibility of microbial degradation of 1,2-dichloroethane. Some microbiologists report that this and similar chlorinated hydrocarbons are not metabolized by either aerobic or anaerobic microorganisms. Other experts in the field believe biodegradation of simple chlorinated organic compounds can occur via cometabolic processes. However, no evidence supporting microbial biodegradation of 1,2-dichloroethane has been found. There is general agreement that mammals metabolize 1,2-dichloroethane, producing chlorinated acetic acids either directly or via chloroethanols. All of the chlorinated acetic acids are susceptible to further biodegradation by microorganisms in seawater. At least two of the mammalian metabolites (monochloroacetic acid and 2-chloroethanol) are more toxic to mice than is 1,2-dichloroethane.

1.6 BIOLOGICAL ASPECTS IN HUMANS (Sect. 6)

Inhalation is the principal route of human exposure to 1,2-dichloroethane. Uptake occurs primarily at work sites where this compound is manufactured or used. Ingestion of 1,2-dichloroethane is relatively uncommon and is chiefly the result of mistaken identity or attempts at suicide. Once inhaled or ingested, 1,2-dichloroethane is readily absorbed in the lungs or gastrointestinal tract. Uptake by skin absorption is slow, and large doses are required to cause serious poisoning.

Information is lacking on the metabolism, transport, distribution, and elimination of 1,2-dichloroethane in humans. It is known, however, that this compound appears in the breath and milk of nursing mothers

exposed by inhalation and skin absorption. In the absence of other information, it is generally assumed that human metabolism of 1,2-dichloroethane proceeeds through the formation of 2-chloroethanol and chloroacetic acid, as it does in mice.

1,2-Dichloroethane is toxic to humans when ingested, inhaled, or absorbed through skin or mucous membrane. The primary effects of acute or chronic exposures are central nervous system depression, gastrointestinal upset, and injury to liver, kidneys, lungs, and adrenals.

Ingestion of 1 or 2 oz of 1,2-dichloroethane is usually fatal to an adult male. Clinical symptoms of acute poisoning by ingestion usually appear within 2 hr of exposure and include headache, dizziness, general weakness, nausea, vomiting of blood and bile, dilated pupils, heart pains and constriction, pain in the epigastric region, diarrhea, and unconsciousness. Pulmonary edema and cyanosis often occur. Autopsies frequently reveal hyperemia and hemorrhagic lesions of the stomach, intestine, heart, brain, liver, and kidney. Death is often attributed to circulatory and respiratory failure.

An exposure of 1 hr to air containing 4000 ppm 1,2-dichloroethane produces serious illness in humans. The effects of acute exposure by inhalation are similar to those described for ingestion, except that the central nervous system appears to be the primary target. Absorption of 1,2-dichloroethane through skin produces effects similar to those reported for inhalation, but large doses are required to cause systemic poisoning.

Chronic exposures to low concentrations of 1,2-dichloroethane by inhalation or skin absorption usually result in progressive effects that closely resemble symptoms described for acute exposure, especially neurological changes, loss of appetite, gastrointestinal problems, irritation of mucous membranes, and liver and kidney impairment. If exposure is brief, symptoms may disappear when exposure ceases.

There are no published studies of carcinogenic, mutagenic, or teratogenic effects of 1,2-dichloroethane on humans, but based on recent animal studies the National Institute for Occupational Safety and Health recommends that the compound be handled in the workplace as if it were a human carcinogen.

The human odor threshold for 1,2-dichloroethane varies from about 3 to 6 ppm in the laboratory, but under other conditions some individuals consider it barely detectable at 50 or 100 ppm. In other tests, it has been established that inhalation of a few parts per million of 1,2-dichloroethane by humans decreases the sensitivity of the eye to light, increases temporary vasoconstriction in fingers, and increases the depth of breathing.

1.7 BIOLOGICAL ASPECTS IN NONHUMAN MAMMALS (Sect. 7)

More information is available on the metabolism of 1,2-dichloroethane in nonhuman mammals than in humans, but experimental data are still sparse and metabolic processes are poorly understood. In female mice intraperitoneally injected with ^{14}C-labeled 1,2-dichloroethane, metabolism occurred rapidly; about 90% of the dose was eliminated within 24 hr. Roughly one-third of the dose was expired unchanged or as carbon dioxide, and almost all of the remainder was excreted in the urine. The chief metabolites in the urine were chloroacetic acid, *S*-carboxymethylcysteine, and thiodiacetic acid; these compounds also formed when chloroacetic acid was administered. Thus, it appears that the metabolism of injected 1,2-dichloroethane in female mice proceeds mainly through a dehalogenation step that yields chloroacetic acid. In other studies, the dehalogenation of 1,2-dichloroethane was shown to occur in vitro both enzymatically and nonenzymatically.

Information is lacking on the distribution of 1,2-dichloroethane in nonhuman mammals. However, it has been established that small amounts of 1,2-dichloroethane concentrate in milk from cows fed grain containing 100 to 1000 ppm 1,2-dichloroethane.

The primary toxic effects of 1,2-dichloroethane on nonhuman mammals are similar for acute, subacute, and chronic exposures. They consist mainly of central nervous system depression and hemorrhagic or hyperemic lesions of the liver, kidneys, lungs, and adrenals. Injuries chiefly reflect the powerful narcotic and solvent properties of the chlorinated hydrocarbon and are usually dose related. Rapid death in deep narcosis often follows acute exposure by inhalation or ingestion. Deaths occurring a few hours after recovery from narcosis are usually the result of shock or cardiovascular collapse. Deaths delayed by several days most often

result from renal damage. Nevertheless, it is frequently difficult to correctly ascribe the exact mechanism of death for many acutely or chronically exposed animals. Weakness, vertigo, persistent thirst, eye and nasal irritation, static and motor ataxia, retching movements, and marked changes in respiration are common signs of acute 1,2-dichloroethane poisoning in nonhuman mammals.

Generally, 1,2-dichloroethane appears to be more toxic to mammals than carbon tetrachloride. Few animals survive exposure to air containing 1500 or 3000 ppm for 7 hr, although death is delayed for days in some species. Typically, the most sensitive animals succumb to a 4-hr exposure at 1000 ppm.

Because of its chemical structure, 1,2-dichloroethane has been classified as a substance having limited suspicion of carcinogenicity; however, few studies have addressed the carcinogenic potential of this compound. The earliest studies revealed no evidence of carcinogenic activity in Wistar rats exposed to 1,2-dichloroethane by inhalation or in male mice injected intraperitoneally, but more recent studies established a significant positive association between dosage and the incidence of several types of carcinomas, adenomas, or sarcomas in rats and mice exposed by oral intubation. Two ongoing studies of carcinogenic effects of 1,2-dichloroethane in mice and rats are expected to be completed in 1979.

No evidence was found in the literature indicating mutagenic or teratogenic activity of 1,2-dichloroethane in nonhuman mammals. However, studies dealing with the teratogenic effects of 1,2-dichloroethane on rats and rabbits are expected to be completed by early 1979.

1.8 BIOLOGICAL ASPECTS IN OTHER VERTEBRATES (Sect. 8)

Little information is available on the biological aspects of 1,2-dichloroethane in nonmammalian vertebrates. In general, the few published LC_{50} values for fish indicate relatively low toxicity effects compared with other simple aliphatic chlorinated hydrocarbons. The aquatic toxicity rating (96-hr TL_m, species unspecified) assigned to 1,2-dichloroethane is 1000 to 100 ppm, which indicates very low toxicity to aquatic animals.

Concentrations of 1,2-dichloroethane normally remaining on fumigated grains used as chicken feed appear unlikely to cause adverse effects on growth, semen, or fertility in chickens, but egg weight and egg production can be reduced if excessively high residual 1,2-dichloroethane is present in the grain.

1.9 BIOLOGICAL ASPECTS IN INVERTEBRATES (Sect. 9)

1,2-Dichloroethane is toxic to a variety of annelids and arthropods and is widely used to control infestations of the latter in stored products such as grain. To reduce flammability and increase penetrating power in deep stacks of grains, 1,2-dichloroethane is usually applied as a mixture with other compounds such as carbon tetrachloride. The LC_{50} values for 1,2-dichloroethane alone vary with species, exposure time, and other test conditions but usually range from 10 to 100 mg/liter for exposures of 24 hr.

1,2-Dichloroethane exhibits mutagenic activity in some types of invertebrates. Sex-linked mutations have been observed in eggs, larvae, and imagoes of *Drosophila melanogaster* after brief exposures to air containing the chlorinated hydrocarbon. Increased chromosomal nondisjunctions and recessive sex-linked lethal mutations in exposed adult male and female *Drosophila* have also been observed.

1.10 BIOLOGICAL ASPECTS IN PLANTS (Sect. 10)

Prolonged exposure to 1,2-dichloroethane inhibits germination and increases mutations in some seeds. In certain species, the vigor of subsequent seedling growth is also reduced. Mixtures of 1,2-dichloroethane with carbon tetrachloride and ethylene chlorohydrin (Rindite) are also effective in breaking bud dormancy in potato tubers, beech branches, and grapevine cuttings.

The lethal and mutagenic effectiveness of 1,2-dichloroethane in barley seeds is much greater than expected from simple model calculations. This increased effectiveness has been attributed to the formation of toxic mustard-type compounds through reactions with thiols and amines

and to the bifunctional nature of β-halogenoethylating agents which permits cross-linking with DNA. Alkylation and cross-linking of DNA can prevent exposed cells from replicating and undergoing mitosis.

1.11 BIOLOGICAL ASPECTS IN MICROORGANISMS (Sect. 11)

1,2-Dichloroethane inhibits the growth of many different bacteria, but its effectiveness varies with concentration and species. 1,2-Dichloroethane also interacts mutagenically with some bacteria, both with and without metabolic activation, and can alter the DNA structure of *Escherichia coli*. However, as measured by the Ames test, 1,2-dichloroethane is a relatively weak mutagen.

Certain fungi appear to tolerate mixtures of 1,2-dichloroethane and trichloroethane reasonably well. In some instances, spore germination was inhibited by application of the mixture at typical commercial rates, but germination resumed following aeration. The action of the gas mixture on these microorganisms thus appears to be fungistatic rather than fungicidal.

1,2-Dichloroethane inhibits the uptake of carbon dioxide by some algae; however, the effective concentration for a 50% reduction in uptake is orders of magnitude greater than the highest concentration of 1,2-dichloroethane thus far reported in surface waters from industrialized regions. Many common waterborne microflora also tolerate 1,2-dichloroethane in concentrations much higher than those reported in U.S. surface waters.

1.12 IN VITRO AND BIOCHEMICAL STUDIES (Sect. 12)

1,2-Dichloroethane inhibits the in vitro growth of several kinds of cells (HeLa, Ehrlich-Landschütz diploid, and erythrocytes). In general, however, the inhibition is less pronounced than that for other common aliphatic chlorinated hydrocarbons under similar conditions.

1.13 ANALYTICAL METHODS AND MONITORING TECHNIQUES (Sect. 13)

Chloride analysis, colorimetry, halide meters, infrared spectrometry, and gas chromatography have been used to determine 1,2-dichloroethane in environmental samples. However, only the last two methods are specific for this compound, and only the last method is sure to provide quantitative information when the sample contains other common chlorinated hydrocarbons. Thus, gas chromatography is the method of choice for determining 1,2-dichloroethane in environmental samples. Fortunately, the method is capable of great sensitivity. With adequate sampling techniques and use of a mass spectrometer as a detector, a limit of detection in air of 5 ppt is feasible. Although few environmental analyses of this precision exist and the necessary analytical protocols are not generally established, the lack is due to motivation rather than insufficient technology. Adequate analyses of 1,2-dichloroethane in environmental samples can be achieved whenever the need is justified.

Halide meters and infrared spectrometry are useful monitoring methods when only 1,2-dichloroethane is present, but they are not generally useful for environmental samples that usually contain other simple chlorinated hydrocarbons in far greater amounts than 1,2-dichloroethane. For this situation, laboratory processing of field-collected samples appears necessary.

1.14 REGULATIONS AND STANDARDS (Sect. 14)

Well-defined rules and recommendations exist for exposures to 1,2-dichloroethane in the workplace. However, less stringent conditions govern the use of 1,2-dichloroethane in foods, drugs, cosmetics, and pesticides. The solvent is exempt from the requirement of a tolerance in or on raw agricultural commodities, and permissible residues of 1,2-dichloroethane in spice oleoresins intended for human consumption may amount to 30 ppm. There are no regulations of the compound in specialty uses such as cleaning solutions or adhesive solvents. 1,2-Dichloroethane is approved for use as an extracting solvent in the manufacture of animal feeds, providing the residual concentration does not exceed 300 ppm. It

is also approved for use as an adjuvant for pesticide dilutions prior to application to the growing crop.

1.15 CONCLUSIONS

1. Large quantities of 1,2-dichloroethane are released to the environment primarily from manufacturing losses during the synthesis of the compound and its end products.
2. Additional environmental contamination arises from dispersive uses of 1,2-dichloroethane, such as fumigants, paints, coatings, and adhesives, and from storage, distribution, and waste disposal operations.
3. 1,2-Dichloroethane is volatile; it enters the atmosphere rapidly from aqueous effluents and less quickly from solid wastes.
4. 1,2-Dichloroethane is subject to photooxidation and has a relatively short half-life in the troposphere; thus, it is unlikely to accumulate in the environment.
5. Apparently, 1,2-dichloroethane is not biodegraded by microorganisms, but neither does it appear to bioconcentrate nor biomagnify.
6. On the basis of a limited number of samples, the concentrations of 1,2-dichloroethane in environmental air distant from point sources appear to be very low, probably of the order of parts per trillion or less.
7. In general, the concentrations of 1,2-dichloroethane in surface waters distant from point sources are about 1 ppb, but some samples may contain a 100-fold greater amount.
8. The concentrations of 1,2-dichloroethane in environmental air and water near point sources are unknown.
9. 1,2-Dichloroethane is toxic to humans, other vertebrates, invertebrates, plants, and microorganisms.
10. Inhalation is the chief route of human exposure. Exposure by ingestion occurs only rarely, but it is usually fatal. Absorption of 1,2-dichloroethane through the skin occurs slowly; therefore, this route of exposure is relatively unimportant.

11. The primary effects of acute or chronic exposures are central nervous system depression, gastrointestinal upset, and injury to liver, kidneys, lungs, and adrenals.
12. An exposure of 1 hr to air containing 4000 ppm 1,2-dichloroethane produces serious illness in humans.
13. There are no published studies of carcinogenic, mutagenic, or teratogenic effects of 1,2-dichloroethane on humans, but based on animal studies the National Institute for Occupational Safety and Health recommends that the compound be handled in the workplace as if it were a human carcinogen.
14. 1,2-Dichloroethane is a carcinogen in rats and mice exposed by oral intubation.
15. 1,2-Dichloroethane is a weak mutagen for certain strains of *Salmonella* and can alter the DNA structure of *Escherichia coli*. It also causes mutations in barley and pea seeds.
16. Environmental samples can be adequately analyzed by the gas chromatographic technique. Samples containing 1,2-dichloroethane at the parts-per-trillion level will probably require a mass spectrometric detector and may require development of better sample-collecting techniques.
17. On the basis of present information, it appears that 1,2-dichloroethane in the environment poses little risk to the population distant from point sources.
18. The most pressing need relative to environmental pollution by 1,2-dichloroethane is to determine the risk to the population near point sources by obtaining adequate analyses of air and surface waters near these locations.
19. In view of the established toxic and carcinogenic character of the solvent, it is important to minimize exposure to 1,2-dichloroethane from dispersive uses of this compound. In many instances, the solvent function of 1,2-dichloroethane in proprietary formulations can probably be replaced by less toxic compounds with little or no detriment to other qualities of the product. It is not presently known when or in what concentrations 1,2-dichloroethane is used in many proprietary formulations.

20. Because it is volatile, little unreacted 1,2-dichloroethane remains on cooked foods prepared from 1,2-dichloroethane-fumigated grain. However, some fumigant reacts with grain to form nonvolatile residues. It is not known if these residues or their metabolites are noxious.

2. PHYSICAL AND CHEMICAL PROPERTIES

1,2-Dichloroethane, the first chlorinated hydrocarbon described in the chemical literature, was initially produced by Dutch chemists in 1795 (Hardie, 1964). For more than a century, little commercial use of the compound occurred. By 1970, however, such strong demand existed that 1,2-dichloroethane was manufactured in greater tonnage than any other chlorinated organic compound (Rothon, 1972). In 1975, 1,2-dichloroethane was the sixteenth highest-volume chemical produced in the United States (Hawley, 1977). Previously regarded by some investigators as an irritating but relatively nontoxic liquid (Rothon, 1972), 1,2-dichloroethane is now recognized as a highly toxic material (National Institute for Occupational Safety and Health, 1976) and a potential human carcinogen and mutagen (Fishbein, 1976).

2.1 NOMENCLATURE, FORMULA, AND STRUCTURE

The Chemical Abstracts Service registry number for 1,2-dichloroethane is 107-06-2; the National Institute for Occupational Safety and Health number listed in the *Registry of Toxic Effects of Chemical Substances* is K005250 (Fairchild, 1977). Many synonyms and trade names are also used: Brocide, Destruxol Borer-Sol, Di-chlor-mulsion, *sym*-dichloroethane, α,β-dichloroethane, Dutch liquid, EDC, ENT 1,656, ethane dichloride, ethylene chloride, ethylene dichloride, glycol dichloride, and oil of the Dutch chemists (Fairchild, 1977; Mitten et al., 1970).

The composition and structure of 1,2-dichloroethane are indicated by the molecular formula $C_2H_4Cl_2$ and the line diagram:

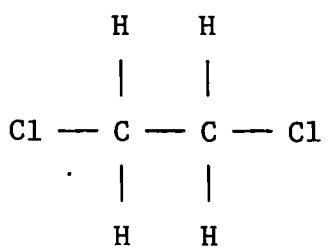

1,2-Dichloroethane is a saturated organic compound, a chlorinated ethane, that contains no double-bonded carbon atoms. It should be distinguished

from a common unsaturated industrial solvent, dichloroethylene, that has the molecular formula $C_2H_2Cl_2$ and the structural formula:

```
Cl    H
 |    |
 C ═  C
 |    |
 H    Cl
```

To minimize confusion between these two compounds, it is recommended that synonyms for 1,2-dichloroethane which have *-ene* endings (i.e., ethylene chloride and ethylene dichloride) no longer be used since this suffix indicates unsaturation in the molecule. Unfortunately, the names ethylene chloride and ethylene dichloride are well established in commercial usage and are unlikely to disappear quickly.

1,2-Dichloroethane should also be distinguished from its isomer, 1,1-dichloroethane, which has the identical molecular formula, $C_2H_4Cl_2$, but has a different structural arrangement:

```
      Cl    H
       |    |
  H — C — C — H
       |    |
      Cl    H
```

1,1-Dichloroethane is also known as ethylidene chloride (Browning, 1953).

2.2 PHYSICAL PROPERTIES

1,2-Dichloroethane is a colorless, oily liquid that has a sweet taste and an odor like chloroform (Hawley, 1977). It is appreciably volatile, evaporating at a rate which is 0.788 times that of carbon tetrachloride or gasoline (Whitney, 1961). Air saturated with 1,2-dichloroethane contains 350 g/m^3 at 20°C and 537 g/m^3 at 30°C. 1,2-Dichloroethane is completely miscible with ethanol, chloroform, ethyl ether, and octanol (Johns, 1976; Windholtz, 1976). The partition coefficient (*P*) of 1,2-dichloroethane between octanol and water is 1.48 (Radding et al., 1977), reflecting preferential solubility in organic media.

Vaporized solvent is readily ignited; the closed-cup flash point is only 13°C. The liquid is also flammable, burning with a smoky flame, but the ignition temperature, 413°C, is high. 1,2-Dichloroethane forms an azeotrope with water which distills at 71.9°C under a pressure of 1 atm. The binary azeotrope contains 19.5% water. Fourteen other binary azeotropes are known (Mitten et al., 1970). A ternary azeotrope containing 78% 1,2-dichloroethane, 17% ethanol, and 5% water boils at 66.7°C.

1,2-Dichloroethane is a good solvent for fats, greases, waxes, unvulcanized rubber, resins, and many other organic compounds (Hardie, 1964); however, its usefulness as a solvent for cellulose ethers and esters is greatly enhanced by the addition of methanol, ethanol, or their acetates (Mitten et al., 1970). Other physical properties are listed in Table 1.

2.3 CHEMICAL PROPERTIES

Dry 1,2-dichloroethane is stable at ambient temperature but decomposes slowly in the presence of air, moisture, and light, forming hydrochloric acid and other corrosive products. Decomposing liquid, which becomes darker in color and progressively acidic, can corrode iron or steel containers. This deleterious reaction is completely inhibited by small concentrations of alkylamines (Hardie, 1964).

Both chlorine atoms in 1,2-dichloroethane are reactive and can be replaced by other substituents. This bifunctional nature of 1,2-dichloroethane makes it useful in the manufacture of condensation polymers (Rothon, 1972). Hydrolysis, with slightly acidulated water at 160°C to 175°C and 15 atm pressure or with aqueous alkali at 140°C to 250°C and 40 atm pressure, yields ethylene glycol, $HOCH_2CH_2OH$; at 120°C, addition of ammonia under pressure yields ethylenediamine, $H_2NCH_2CH_2NH_2$. 1,1,2-Trichloroethane, $CH_2ClCHCl_2$, and other higher chloroethanes are formed by chlorinating 1,2-dichloroethane at 50°C in light from a mercury vapor lamp. 1,2-Dichloroethane reacts with sodium polysulfide to form polyethylene tetrasulfide and with fuming sulfuric acid to give 2-chloroethylsulfuryl chloride, $CH_2ClCH_2OSO_2Cl$. With Friedel-Crafts catalysis, both chlorine atoms in 1,2-dichloroethane can be replaced with aromatic ring compounds; for example, with benzene, diphenylethane, $C_6H_5CH_2CH_2C_6H_5$, is formed (Hardie, 1964).

Table 1. Physical properties of 1,2-dichloroethane

Molecular weight	98.96
Density at 20°C	1.2351
Melting point, °C	-35.36
Boiling point, °C	83.47
Index of refraction at 20°C	1.4448
Vapor pressure, torr	
At -44.5°C	1
At -13.6°C	10
At 10.0°C	40
At 29.4°C	100
At 64.0°C	400
At 82.4°C	760
Solubility in water, ppm	
At 20°C	8690
At 30°C	9200
Biochemical oxygen demand (5 days), %	0
Theoretical oxygen demand, mg/mg	0.97
Measured chemical oxygen demand, mg/mg	1.025
Vapor density (air = 1)	3.42
Flash point, closed cup, °C	13
Ignition temperature, °C	413
Explosive limit, % by volume in air	
Lower	6.2
Upper	15.9
Specific resistivity	9.0×10^{6}
Viscosity at 20°C, cP	0.840
Dielectric constant, ε	10.45
Surface tension, dynes/cm	33.23
Coefficient of cubical expansion at 10°C to 30°C	0.0016
Latent heat of fusion, cal/g	21.12
Latent heat of vaporization at boiling point, cal/g	77.3
Specific heat, cal g^{-1} $°C^{-1}$	
Liquid at 20°C	0.308
Vapor, 1 atm, at 97.1°C	0.255
Critical temperature, °C	288
Critical pressure, atm	53
Critical density, g/cm^3	0.44
Thermal conductivity at 20°C, Btu hr^{-1} ft^{-2}	0.825
Heat of combustion at constant pressure, kcal/g-mole	296.36
Dipole moment, esu	1.57×10^{-18}
Conversion factors at 25°C and 760 torr	1 mg/liter = 1 g/m^3 = 247 ppm 1 ppm = 4.05 mg/m^3 = 4.05 μg/liter

Source: Compiled from Faith, Keyes, and Clark, 1965*a*; Price, Waggy, and Conway, 1974; Verschueren, 1977; Weast, 1977.

2.4 CONTAMINANTS AND CHARACTERISTICS OF THE COMMERCIAL PRODUCT

Commercial 1,2-dichloroethane is usually technical grade material that is 97% to 99% pure. Common commercial specifications for this product include: (1) free from suspended matter and sediment; (2) color, to pass test; (3) distillation range, 82.5°C to 84.5°C at 760 torr; (4) specific gravity at 20/20°C, 1.253 to 1.257; and (5) maximum acidity, as HCl, 0.005%. Most commercial products contain about 0.1% by weight alkylamine to inhibit spontaneous decomposition (Mitten et al., 1970). Uninhibited or impure 1,2-dichloroethane may contain chlorine or hydrogen chloride that can corrode iron or steel containers normally used to store or transport technical grade material. Technical grade 1,2-dichloroethane is a severe fire hazard and a moderate explosion hazard, but spontaneous heating is not a problem. When subjected to excessive heating, such as during a disaster, technical grade 1,2-dichloroethane may decompose, releasing hydrogen chloride and phosgene, both of which are highly toxic (Sax, 1975).

3. PRODUCTION AND USES

3.1 PRODUCTION METHODS

1,2-Dichloroethane is manufactured by direct chlorination of ethylene, oxychlorination of ethylene, or a combination of these methods.

3.1.1 Direct Chlorination

In the direct chlorination process ethylene is treated with chlorine in the presence of a catalyst:

$$CH_2 = CH_2 + Cl_2 \xrightarrow{\text{catalyst}} ClCH_2CH_2Cl \ .$$

Either vapor- or liquid-phase reactions may be used, but undesirable side products are obtained unless conditions are carefully controlled. In one vapor-phase procedure, product yields of 96% to 98% are obtained by treating ethylene at 40°C to 50°C with chlorine containing traces of 1,2-dibromoethane, which serves as a catalyst (Faith, Keyes, and Clark, 1965*a*). The 1,2-dibromoethane is subsequently separated from the crude product and recycled to the reaction chamber, while the gaseous 1,2-dichloroethane is fed into a fractionating column to yield the refined product (Fig. 1). Other direct chlorination procedures differ primarily in reaction conditions and catalyst. Catalysts mentioned most often in the patent literature include ferric, aluminum, cupric, and antimony chlorides (Hardie,

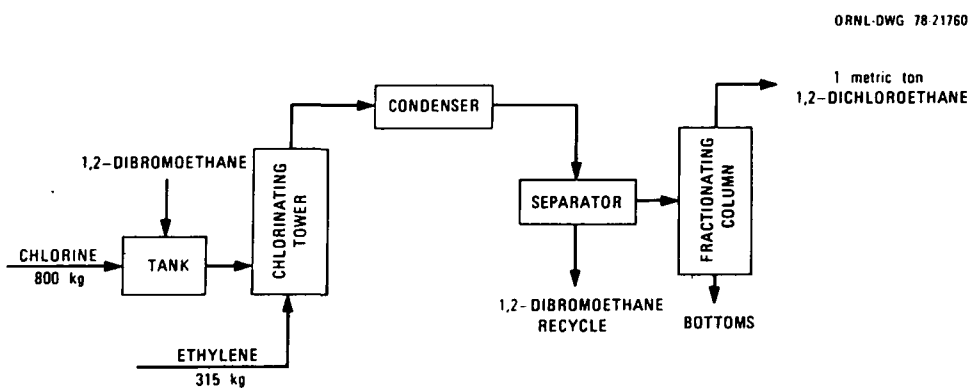

Fig. 1. Manufacture of 1,2-dichloroethane by direct chlorination of ethylene. Source: Adapted from Faith, Keyes, and Clark, 1965*a*, *Industrial Chemicals*, 3rd ed., p. 368. Reprinted by permission of John Wiley and Sons, Inc.

1964). In 1974 the direct chlorination of ethylene accounted for 58% of the U.S. productive capacity for 1,2-dichloroethane.

3.1.2 Oxychlorination

1,2-Dichloroethane is also manufactured commercially by treating ethylene with anhydrous hydrogen chloride and oxygen (or air) in a fluidized bed of finely divided particles containing cupric chloride:

$$2CH_2 = CH_2 + O_2 + 4HCl \xrightarrow{\text{catalyst}} 2ClCH_2CH_2Cl + 2H_2O \ .$$

Typically, the reaction pressure and temperature are maintained at 20 to 70 psig and 200°C to 315°C respectively. Efficient removal of heat from the reactor is essential for good temperature control because the reaction is strongly exothermic (2200 Btu/kg). The process is shown schematically in Fig. 2. The oxychlorination process is preferred to the direct chlorination method by manufacturers who have excess supplies of hydrogen chloride (Faith, Keyes, and Clark, 1965*a*; Hardie, 1964; Mitten et al., 1970). In 1974, 42% of the 1,2-dichloroethane produced in the United States was manufactured by the oxychlorination process.

3.1.3 Balanced Process

Normally, 1,2-dichloroethane is synthesized primarily as an intermediate product in the manufacture of vinyl chloride monomer (CH_2CHCl). Conversion of 1,2-dichloroethane to this product involves thermal dehydrochlorination:

$$ClCH_2CH_2Cl \xrightarrow{\text{thermal cracking}} CH_2CHCl + HCl \ .$$

Manufacturers of vinyl chloride monomer thus have excess hydrogen chloride on hand, and most manufacturers choose to reuse this hydrogen chloride as a raw material in the synthesis of more 1,2-dichloroethane by the oxychlorination method. However, only half of the chloride originally present in 1,2-dichloroethane is recovered as hydrogen chloride during the manufacture of vinyl chloride monomer. Consequently, most manufacturing facilities make use of both the direct chlorination and oxychlorination processes. The manner in which these processes are

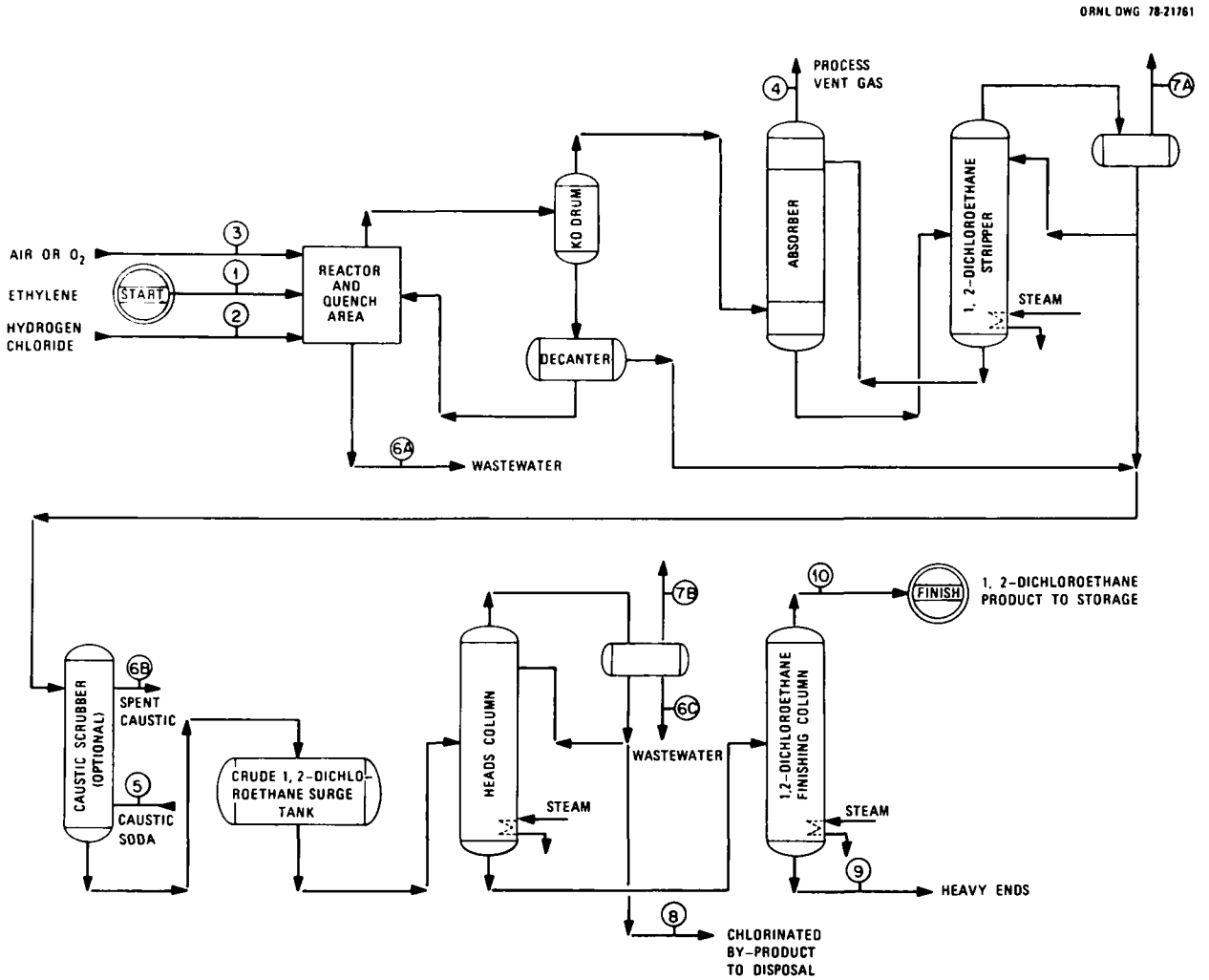

Fig. 2. Simplified flow diagram of 1,2-dichloroethane production by the oxychlorination process. Source: Adapted from Schwartz et al., 1974, Fig. ED-1, p. ED-3.

integrated to produce the so-called *balanced process* is indicated schematically in Fig. 3. A more detailed schematic of the various process streams associated with the 1,2-dichloroethane synthesis portion of the balanced process is shown in Fig. 4.

3.2 PRODUCERS, PRODUCTION CAPACITIES, AND PRODUCTION SITES

1,2-Dichloroethane is produced in the United States mainly by 11 manufacturers in 17 production facilities. The capacities of these plants are flexible and highly responsive to economic conditions; in 1977, the combined annual capacity was rated at 6.35 million metric tons.

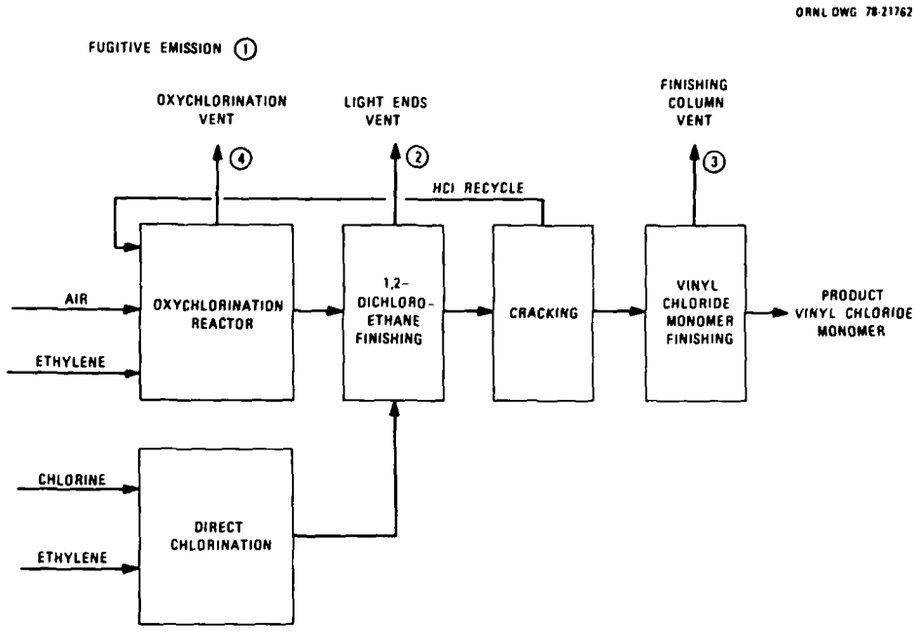

Fig. 3. Arrangement of direct chlorination and oxychlorination facilities in the balanced process. Source: Adapted from U.S. Environmental Protection Agency, 1975*b*, Fig. 3-2, p. 3-6.

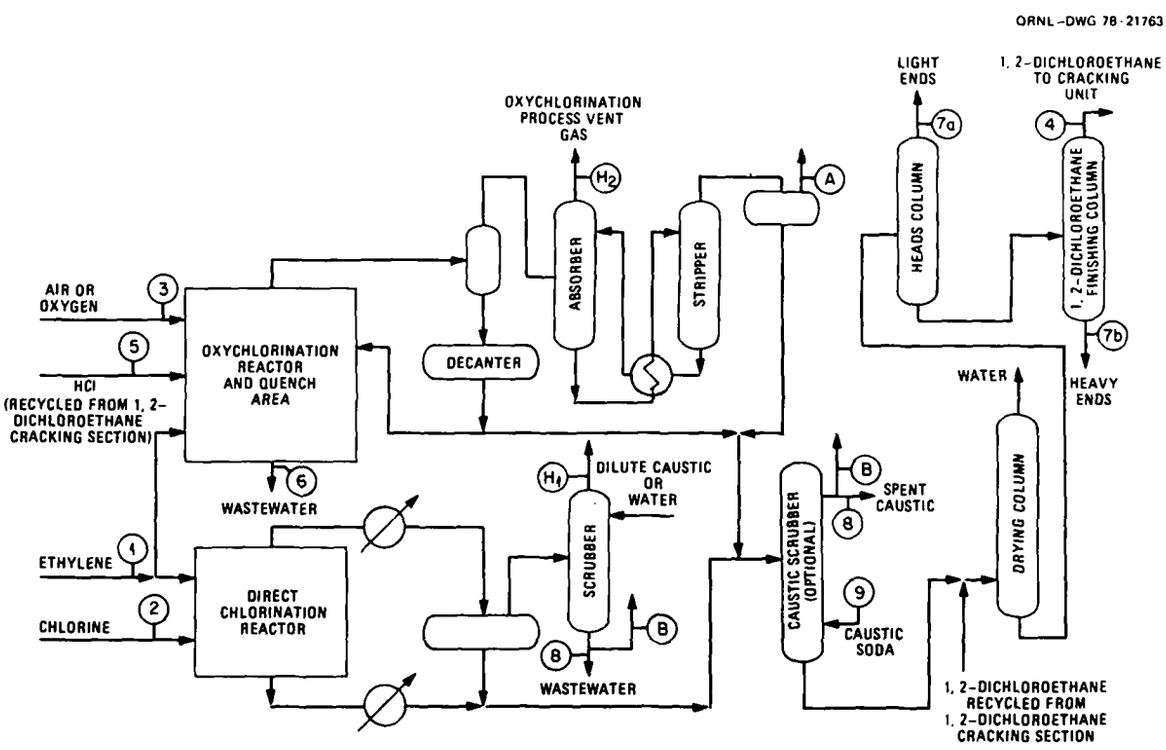

Fig. 4. Balanced chlorination process for producing 1,2-dichloroethane. Source: Adapted from Bellamy and Schwartz, 1975, Fig. VC-2, p. VCM-5.

Individual producers, plant sites, and plant capacities are listed in Table 2. Plant locations are concentrated in Texas and Louisiana along the Gulf Coast (Fig. 5). The approximate number of people living within 5 miles of most of these plants is indicated in Table 3. Population data for areas near other plants are not available. In a few instances, some residents are located near more than one 1,2-dichloroethane production facility.

Table 2. Producers of 1,2-dichloroethane (1977)

Producer	Location	Annual capacity (million metric tons)	Production method[a]	
			Direct chlorination (%)	Oxychlorination (%)
Allied Chemical Corp.[b]	Baton Rouge, La.	0.272	66.7	33.3
Conoco Chemicals	Lake Charles, La.	0.544	49.2	50.8
Diamond Shamrock Chemical Co.	Deer Park, Tex.	0.145	35.8	64.2
Dow Chemical Co.	Freeport, Tex.	0.726	57.1	42.9
	Oyster Creek, Tex.	0.499		
	Plaquemine, La.	0.590	51.7	48.3
Ethyl Corp.	Baton Rouge, La.	0.318	52.7	47.3
	Houston, Tex.	0.114	100.0	0.0
Goodrich Chemical Co.[c]	Calvert City, Ky.	0.454	33.3	66.7
PPG Industries, Inc.[d]	Lake Charles, La.	0.585	77.2	22.8
	Guayanilla, P.R.	0.485		
Shell Chemical Co.	Deer Park, Tex.	0.635	66.2	33.8
	Norco, La.	0.544		
Stauffer Chemical Co.	Long Beach, Calif.	0.141	69.2	30.8
Union Carbide Corp.	Taft, La.	0.068	100.0	0.0
	Texas City, Tex.	0.068	100.0	0.0
Vulcan Materials Co.	Geismar, La.	0.159	0.0	100.0
Total		6.35		

[a]Based on 1974 data (Pervier et al., 1974).
[b]In July 1978, Allied Chemical disclosed plans to sell its Baton Rouge vinyl chloride complex, including production facilities for 1,2-dichloroethane, to ICI Americas.
[c]Goodrich Chemical Co. has announced plans to construct a 1,2-dichloroethane plant in Convent, Louisiana, that will have an annual capacity of 0.36 million metric tons.
[d]A planned expansion of the vinyl chloride plant at Lake Charles was announced in July 1978 by PPG Industries, Inc.

Source: Compiled from *Chemical Marketing Reporter*, 1977*a*, and Pervier et al., 1974.

3.3 ANNUAL PRODUCTION, MARKET PRICES, AND MARKET TRENDS

From 1973 to 1977 the industry operated at about 60% of capacity, producing 4.22, 4.16, 3.62, 3.65, and 4.75 million metric tons of 1,2-dichloroethane respectively (Storck, 1978; U.S. International Trade Commission, 1973-1977). The overall production rate during these years may

ORNL-DWG 78-21764

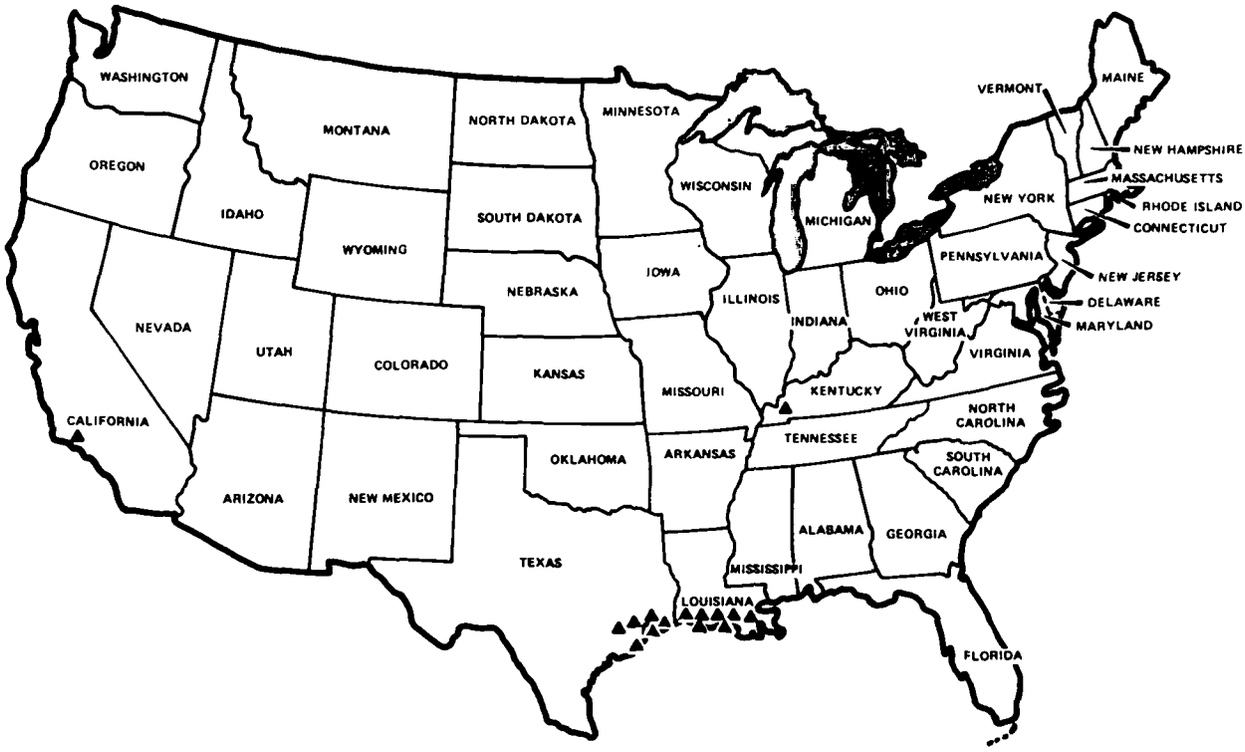

Fig. 5. Locations of 1,2-dichloroethane plants. Source: Adapted from U.S. Environmental Protection Agency, 1975*b*, Map 3-2, p. 3-31.

Table 3. Population living within 5 miles of plants producing 1,2-dichloroethane[a]

Producer	Location	Population within 5 miles of plant
Allied Chemical Corp.	Baton Route, La.	79,808
Conoco Chemicals	Lake Charles, La.	55,701
Diamond Shamrock Chemical Co.	Deer Park, Tex.	131,479
Dow Chemical Co.	Freeport, Tex.	20,625
	Plaquemine, La.	15,415
Ethyl Corp.	Baton Rouge, La.	79,808
Goodrich Chemical Co.	Calvert City, Ky.	9,070
PPG Industries, Inc.	Lake Charles, La.	55,701
	Guayanilla, P.R.	17,847
Shell Chemical Co.	Deer Park, Tex.	131,479
	Norco, La.	18,869
Stauffer Chemical Co.	Long Beach, Calif.	681,311
Union Carbide Corp.	Taft, La.	18,869
	Texas City, Tex.	57,651
Vulcan Materials Co.	Geismar, La.	5,358

[a]Population figures are based on 1970 standard metropolitan statistical area census tract reports.

Source: Compiled from American Public Health Association, 1975.

have been even higher than indicated because captive production is not always adequately reflected in published production data. However, the supply of 1,2-dichloroethane available to the merchant market was less than the cited production rates because only 1,2-dichloroethane produced by direct chlorination of ethylene can be isolated for sale. 1,2-Dichloroethane manufactured by oxychlorination of ethylene is used captively as an intermediate in vinyl chloride production and cannot be separated from that production (Stanford Research Institute, 1975, as cited in U.S. Environmental Protection Agency, 1978*a*). In recent years, only a small fraction, 10% to 15%, of the total amount of 1,2-dichloroethane produced has been sold on the commercial market (U.S. International Trade Commission, 1973-1977).

Spurred primarily by the demand for 1,2-dichloroethane as a raw material for the manufacture of vinyl chloride, production of 1,2-dichloroethane has increased almost every year since 1954 (Fig. 6). This upward trend is expected to continue despite small declines in production during 1971, 1974, and 1975, when short-term recessionary influences temporarily reduced demand. Future growth of the market is expected to

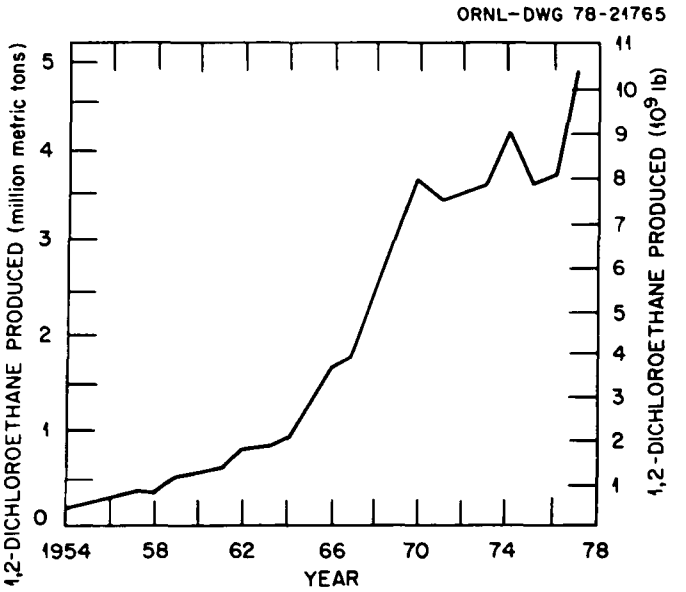

Fig. 6. Production trends for 1,2-dichloroethane, 1954-78. Source: Adapted from Lowenheim and Moran, 1975, *Faith, Keyes, and Clark's Industrial Chemicals*, 4th ed., p. 394. Reprinted by permission of John Wiley and Sons, Inc.

average 4% to 5% per year through 1981, at which time demand for 1,2-dichloroethane is expected to be about 6.6 million metric tons. Five of the major producing companies are currently expanding production facilities or are planning increased production in the near future (*Chemical Marketing Reporter*, 1977*b*).

About 5% to 10% of the annual U.S. production is normally exported. In 1974 such sales amounted to 0.36 million metric tons (Table 4). No evidence of recent imports was found.

Table 4. U.S. exportation of 1,2-dichloroethane, 1970-74

Year	Exports (million metric tons)
1970	0.308
1971	0.156
1972	0.171
1973	0.167
1974	0.359

Source: Adapted from U.S. Department of Commerce, 1970-1974, as cited in U.S. Environmental Protection Agency, 1978*b*.

The selling price of 1,2-dichloroethane ranged from 2.8 to 12¢/lb between 1952 and 1977. Currently, the product is offered in tanks, undelivered, at 11 to 12¢/lb (*Chemical Marketing Reporter*, 1978).

3.4 USES

1,2-Dichloroethane is used primarily as a chemical intermediate in the synthesis of other compounds and as a solvent, extraction agent, or fumigant. The first category accounts for the major fraction, about 99.9% of the annual U.S. consumption of 1,2-dichloroethane. All other uses are labeled minor because they represent only 0.1% to 0.2% of the annual production.

3.4.1 Major

Since the mid-1940s, 1,2-dichloroethane has been chiefly used as a raw material in the synthesis of other chemical compounds, particularly vinyl chloride, methyl chloroform, trichloroethylene, perchloroethylene, vinylidene chloride, and ethyleneamines. In 1976 the manufacture of vinyl chloride consumed 86% of all 1,2-dichloroethane produced in the United States. Synthesis of the remaining compounds requires only a small fraction of the annual production of 1,2-dichloroethane. For example, in 1976 methyl chloroform required 3%; ethyleneamines, 3%; trichloroethylene, 2%; and perchloroethylene, 2% (U.S. Environmental Protection Agency, 1977). The use of 1,2-dichloroethane as a scavenger for lead in gasoline amounted to about 2% of the 1976 production. Quantities of 1,2-dichloroethane consumed for these and other uses between 1968 and 1974 are listed in Table 5.

Most of the major uses of 1,2-dichloroethane are expected to increase during the next few years. Stanford Research Institute has predicted (cited in Patterson et al., 1975) the following annual growth rates for products manufactured from 1,2-dichloroethane: vinyl chloride, 9%;

Table 5. Consumption of 1,2-dichloroethane in the United States, 1968-74 (million metric tons)

Use	1968	1970	1972	1974
Vinyl chloride	1.778	2.782	3.465	3.895
Methyl chloroform	0.111	0.120	0.106	0.153
Trichloroethylene	0.062	0.102	0.112	0.133
Perchloroethylene	0.080	0.112	0.125	0.125
Vinylidene chloride	0.057	0.074	0.092	0.097
Ethyleneamines	0.122	0.124	0.122	0.132
Lead scavenger	0.101	0.108	0.108	0.097
Minor uses	0.005	0.005	0.006	0.007
Exports	0.095	0.308	0.171	0.167
Total	2.411	3.735	4.305	4.805

Source: Adapted from Stanford Research Institute, 1975, as cited in U.S. Environmental Protection Agency, 1978*a*.

perchloroethylene, 6%; methyl chloroform, 9%; ethyleneamines, 7%; vinylidene chloride, 7%; and miscellaneous, 7%. A decreased use of 1,2-dichloroethane as a lead scavenger in gasoline and for manufacture of trichloroethylene was predicted, but a steady demand for exports was forecast.

3.4.2 Minor

Information concerning minor uses of 1,2-dichloroethane is not generally available in standard literature sources because distribution is highly fragmented and end-use data are often considered proprietary. However, it has been established that 1,2-dichloroethane is used in textile cleaning and processing, in formulations of acrylic-type adhesives, as a product intermediate for polysulfide elastomers, as a constitutent of polysulfide rubber cements, in the manufacture of grain fumigants, and as a cleaning and extraction solvent. Stanford Research Institute (1975, as cited in U.S. Environmental Protection Agency, 1978*a*) concluded that these minor uses of 1,2-dichloroethane amounted to 7 million kilograms in 1974 (Table 5). In a more detailed description, Auerbach Associates, Inc. (1978*a*) estimated consumption of 1,2-dichloroethane by minor uses at about 5 million kilograms in 1977. Of this total, about 28% was used in the manufacture of paints, coatings, and adhesives. Extracting oil from seeds, treating animal fats, and processing pharmaceutical products required 23% of the total. An additional 19% was consumed cleaning textile products and polyvinyl chloride manufacturing equipment. Nearly 11% was used in the preparation of polysulfide compounds. Grain fumigation required about 10%. The remaining 9% was used as a carrier for amines in leaching copper ores, in the manufacture of color film, as a diluent for pesticides and herbicides, and for other miscellaneous purposes. The names, compositions, and toxicity ratings of typical pesticide products containing 1,2-dichloroethane are listed in the Appendix.

Several processes have been developed by which fish solids can be treated with solvents to remove most of the lipid and moisture, yielding a flour containing 70% to 90% protein. Various extracting solvents, including 1,2-dichloroethane, can be used in such processes, but Morrison

and Munro (1965) established that the quality of the resulting food product depends on the choice of solvent. When 1,2-dichloroethane is the extracting solvent, it reacts with sulfhydryl groups in proteins, forming stable thioether linkages that interfere with the subsequent release of cysteine, histidine, and methionine in pancreatic digestion. The reaction of 1,2-dichloroethane with sulfhydryl groups is strongly pH dependent, occurring readily at pH 8.6 but hardly at all near pH 4.5. Typically, the pH of the extracting system is sufficiently high so that use of 1,2-dichloroethane in this application results in a food product of reduced nutritional value; however, increasing the acidity of the extracting solution will prevent the occurrence of thioethers in fish flour.

3.4.3 Discontinued

The use of 1,2-dichloroethane as a solvent appears to be decreasing, particularly in areas where occupational health hazards or consumer-oriented products are involved. For example, the following applications often cited in the literature are now considered obsolete or rarely used: upholstery and carpet fumigant, soap and scouring compound ingredient, wetting and penetrating agent, and degreasing fluid (Auerbach Associates, Inc., 1978*a*). 1,2-Dichloroethane was once registered for use in fingernail enamel, but the Food and Drug Administration believes that it is no longer used in cosmetics. Bureau of Drug scientists sought, but did not find, 1,2-dichloroethane as an active or inactive ingredient in any registered drug products (Kennedy, 1978*b*).

4. SOURCES AND LEVELS OF 1,2-DICHLOROETHANE IN THE ENVIRONMENT

4.1 POTENTIAL SOURCES OF ENVIRONMENTAL CONTAMINATION

Reports dealing with contamination of the environment by 1,2-dichloroethane are scarce and inadequate. Only a few quantitative measurements of emissions are available, and estimates by different authors vary substantially. Early observers agreed that losses of 1,2-dichloroethane occurring during the manufacture of end products, primarily vinyl chloride monomer, constituted the major source of contamination. Losses sustained during the synthesis of 1,2-dichloroethane were considered substantial, but less than losses incurred during the manufacture of vinyl chloride. Emissions from all other sources were considered minor by comparison (Patterson et al., 1975). More recently, some authors have attributed almost all losses to the manufacture of 1,2-dichloroethane and virtually none to the manufacture of vinyl chloride (Eimutis and Quill, 1977). This anomaly appears to be largely semantic, stemming from arbitrary definitions of what constitutes vinyl chloride production in a multipurpose plant that also synthesizes 1,2-dichloroethane. In the discussion that follows the original concepts of each author are retained.

4.1.1 Manufacture of End Products

Vinyl chloride monomer is the most important end product manufactured from 1,2-dichloroethane. It is prepared by dehydrochlorination of 1,2-dichloroethane in a cracking furnace packed with pumice or charcoal catalyst (Fig. 7). After dehydrochlorination, the hot effluent gases are quenched and partially condensed by direct contact with cold 1,2-dichloroethane in the quench tower. The liquid streams from the quencher are fractionated to separate vinyl chloride monomer from unreacted 1,2-dichloroethane, which is then recycled. Losses of 1,2-dichloroethane to the environment can occur in the 1,2-dichloroethane recycle purification system, in effluents from associated aqueous by-product production units, in the heavy ends, and in miscellaneous leaks and spills. Vapor vented from the light-ends distillation column (stream A_1 in Fig. 7) is an important

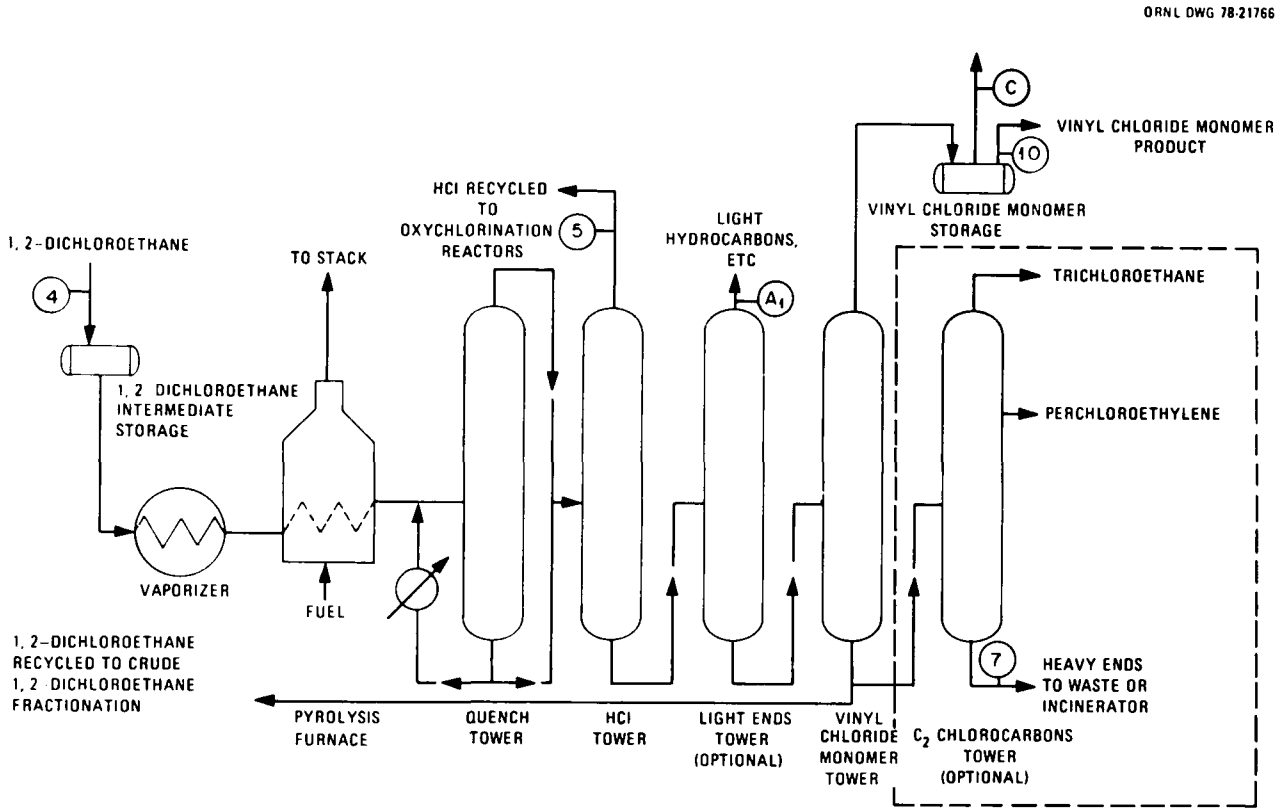

Fig. 7. 1,2-Dichloroethane cracking process for vinyl chloride production. Source: Adapted from Bellamy and Schwartz, 1975, Fig. VC-3, p. VCM-7.

potential source of loss of 1,2-dichloroethane to the atmosphere; typically, this stream contains about 0.0045 kg of 1,2-dichloroethane per kilogram of vinyl chloride monomer product (Table 6). The heavy ends (stream 7 in Fig. 7) from the final distillation of the vinyl chloride monomer may also be an important environmental contaminant; this stream typically contains about 0.008 kg of the chlorinated hydrocarbon per kilogram of vinyl chloride product. These heavy ends, the so-called EDC-tars, are extremely toxic, causing acute biologic effects in concentrations as low as 10 to 100 ppb. Trichloroethane seems to be the main by-product in tars from ethylene processes, but tetrachloroethane, pentachloroethane, trichlorobutene, tetrachlorobutene, and a score of other compounds have also been identified (Jensen et al., 1975). In 1970 large amounts of European EDC-tars were dumped in the North Sea; more recently, incineration at sea appears to be the usual practice (Jensen et al., 1975). There is no indication in published reports that these disposal procedures have been used by

Table 6. Typical material balance for vinyl chloride monomer production via balanced ethylene process[a] (kg/kg product)

Component	Raw materials			Intermediates		By-products			Water streams		Vent streams			Product
	C_2H_4 (1)	Cl_2 (2)	Air (3)	1,2-Dichloroethane (4)	HCl (5)	H_2O (6)	Light ends (7*a*)	Heavy ends (7*b*)	H_2O (8)	Dilute caustic (9)	Direct chlorination (H_1)	Oxychlorination (H_2)	Distillation (A, A_1)	Vinyl chloride monomer (10)
Carbon dioxide			0.0003								*b*	0.0116		
Carbon monoxide											*b*	0.0032		
Nitrogen			0.5782								*b*	0.5779	0.0003	
Oxygen			0.1537								*b*	0.0214		
Chlorine		0.5871									0.0001		0.0001	
Hydrogen chloride					0.6036									
Water			0.0171			0.1438			0.1166	0.0030		0.0413		
Caustic soda										0.0008				
Sodium chloride									0.0014					
Ethylene	0.4656										0.0025			
Other hydrocarbons	0.0002												0.0001	
1,2-Dichloroethane				1.6370[c]			0.0017	0.0012			0.0016	0.0017	0.0045	
Vinyl chloride monomer							0.0008[d]				0.0001	0.0012	0.0024[d]	1.0000[e]
Light chlorocarbons							0.0017	0.0012			0.0003	0.0025		
Heavy chlorocarbons								0.0023						
Total vinyl chloride monomer	0.4658	0.5871	0.7493	1.6370	0.6036	0.1438	0.0042	0.0047	0.1180	0.0038	0.0045	0.6609	0.0075	1.0000

[a]Numbers in parentheses under headings refer to stream identification numbers in Fig. 4 and 7. Miscellaneous intermittent emissions not noted in this material balance, such as sampling, annual vessel openings, and miscellaneous fugitive emissions, amount to about 0.0001 kg/kg product.

[b]Inerts present in chlorine feed will be emitted in this vent stream.

[c]The amount of 1,2-dichloroethane in this column represents the 1,2-dichloroethane for a stoichiometric balance, including the amount that is changed to other products (i.e., heavy chlorocarbons), but does not include any recycled 1,2-dichloroethane.

[d]Vinyl chloride monomer fugitive emissions are included in this category in order to make a material balance, even though part of the actual losses occur elsewhere.

[e]Excludes storage and loading losses of vinyl chloride monomer. The average of these losses for surveyed plants was 0.0008 kg/kg product.

Source: Adapted from Bellamy and Schwartz, 1975, Table VC-1, p. VCM-9.

U.S. producers. In the United States, disposal of heavy ends is usually by burial in a landfill or by incineration. The latter option may result in considerable air pollution if not controlled because the resulting combustion products include chlorine and hydrogen chloride as well as phosgene (Patterson, 1975; Sax, 1975).

Good estimates of present losses of 1,2-dichloroethane to the environment from vinyl chloride production plants are not available because manufacturers have been installing equipment to reduce these losses during recent years. Earlier, Patterson et al. (1975), assuming emissions of 1%, computed losses of 39 million kilograms for all end-product manufacturing (Table 7), of which vinyl chloride production comprises about 86%. Now, this estimate undoubtedly represents only an upper limit. Eimutis and Quill (1977) estimated total emissions of 1,2-dichloroethane from all sources in 1977 at 50.2 million kilograms per year but attributed 90% of these losses to the manufacture of 1,2-dichloroethane and none to vinyl chloride synthesis (Table 8). Additional estimates of environmental pollutants arising from the manufacture of vinyl chloride monomer in a typical chlorination process are shown in Fig. 8.

Vinyl chloride monomer may also be prepared by processes which do not involve the use of dichloroethane. Currently, about 10% of the

Table 7. Estimated emissions of 1,2-dichloroethane based on 1974 U.S. production of 4218 million kilograms

Source	Source strength (million kg)	Estimated loss (%)	Estimated emissions (million kg)
End-product manufacturing	3856	1.0	39
1,2-Dichloroethane production			
Oxychlorination	1772	1.2	21
Direct chlorination	2447	0.2	5
Solvent uses	6	100	6
Storage, distribution	4218	0.06	3
Total			74

Source: Compiled from Patterson et al., 1975, pp. II-12 to II-16.

Table 8. Emissions report for 1,2-dichloroethane, June 1977

Source	Accuracy of data[a]	Mass of emissions (metric tons per year)	Percent of total
1,2-Dichloroethane			
Oxychlorination	B	23,935.2	47.67
Direct chlorination	B	21,299.9	42.42
1,1,1-Trichloroethane	B	2,433.1	4.85
Ethyl chloride — ethylene hydrochlorination	B	2,313.4	4.61
Tetraethyl/tetramethyl lead	C	169.6	0.34
Polysulfide rubber	C	21.8	0.04
Ethylenediamine	C	18.4	0.04
Chlorobenzene	B	15.6	0.03
Polyvinyl chloride	A	0.1	0.00
Total		50,207	

[a]A — adequate data of reasonable accuracy; B — partly estimated data of indeterminate accuracy; C — totally estimated data of indeterminate accuracy.

Source: Adapted from Eimutis and Quill, 1977, p. 45.

national production of vinyl chloride monomer is by reacting acetylene with hydrogen chloride in the presence of mercuric chloride (Faith, Keyes, and Clark, 1965*b*):

$$CH \equiv CH + HCl \longrightarrow CH_2 = CHCl \ .$$

This exothermic reaction is maintained near 200°C with cooling water, and a yield of 80% to 85% is usually achieved. The acetylene process is economically unattractive to most manufacturers because of the high cost of acetylene relative to ethylene, the feedstock for the 1,2-dichloroethane process, but two manufacturers continue to use the process because of special circumstances.

More recently in 1971, the Lummus Company of New Jersey developed a new vinyl chloride synthesis, called the Transcat process, which produces vinyl chloride monomer from ethane and chlorine or hydrogen chloride. As originally developed, the process experienced some difficulties due to

ORNL- DWG 78-21767

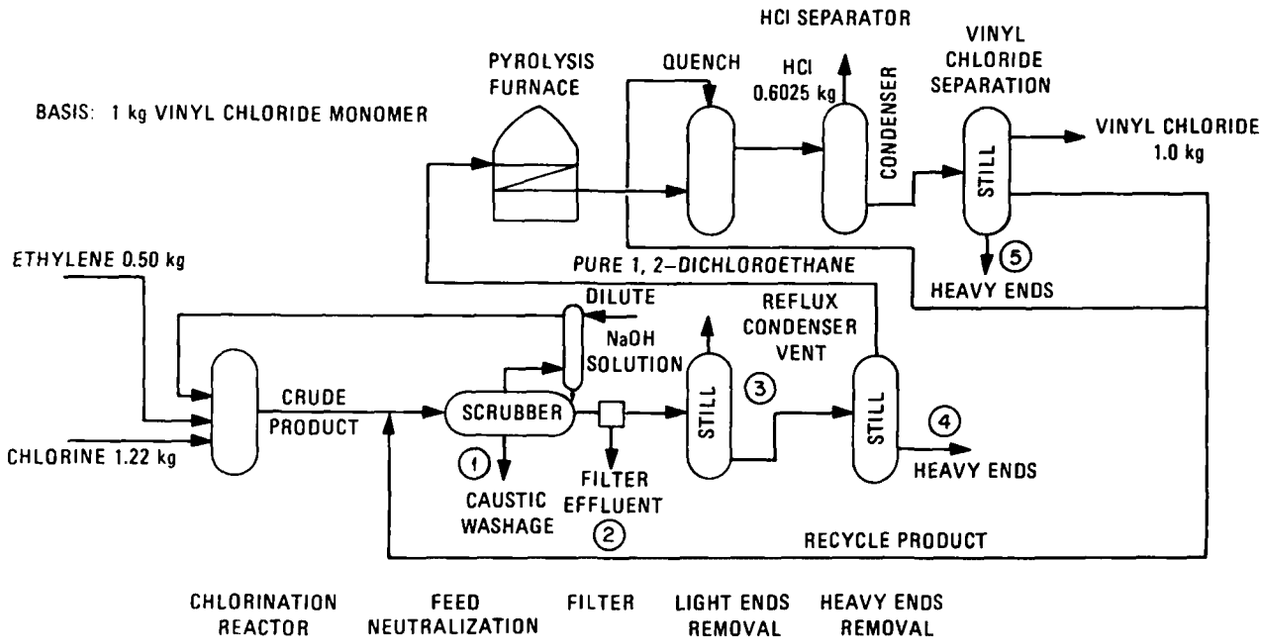

① CAUSTIC WASHAGE (WATER)

DICHLOROETHANE	0.00435 kg
SODIUM HYDROXIDE	0.00098 kg
SODIUM CHLORIDE	0.00033 kg
VINYL CHLORIDE	0.00098 kg
METHYL CHLORIDE	0.00085 kg
ETHYL CHLORIDE	0.00085 kg

↓ TO WATER

② FILTER EFFLUENT (SOLID)

TARS	TRACE
SOLIDS (AS CARBONS)	0.00008 kg

FILTER EFFLUENT (LIQUID)

DICHLOROETHANE	0.0005 kg
SODIUM HYDROXIDE	TRACE

↓ TO LAND

③ VENT ON REFLUX CONDENSER (GAS)

ETHANE	0.0049 kg
DICHLOROETHANE	0.012 kg
METHANE	0.0049 kg

↓ TO AIR

④ HEAVY ENDS

DICHLOROETHANE	0.0024 kg
1, 1, 2-TRICHLOROETHANE	0.004 kg
TETRACHLOROETHANE	0.004 kg
TARS	TRACE

↓ TO LAND

⑤ HEAVY ENDS

HEAVY ENDS	0.037 kg
DICHLOROETHANE	0.0008 kg
TARS	0.00005 kg
SOLIDS ASH	0.0002 kg

↓ TO LAND

Fig. 8. Environmental pollutants arising from manufacture of vinyl chloride monomer in a typical chlorination process. Source: Adapted from Gruber, 1976, Fig. 5-14, p. 5-35.

the formation of undesirable by-products such as chlorine, nitrous oxide, and heavy chlorinated metals. The company is currently refining the method to make it pollution free. The improved process will essentially be a closed system that utilizes ethane, chlorine or hydrogen chloride, and a circulating molten salt catalyst comprised of copper and potassium chlorides. According to company spokesmen, waste chlorinated hydrocarbons can also be used as feedstock for the process, making it an efficient cleanup method for other processes that give off excess chlorinated products. Gaseous effluents from the Transcat process are said to include only carbon dioxide, nitrogen, oxygen, and water vapor. Wastewater from the process is described as being slightly alkaline and containing only sodium chloride. The Transcat process has not yet been commercialized, but the company planned to set up a U.S. demonstration plant by the end of 1978 (Auerbach Associates, Inc., 1978*b*).

4.1.2 Synthesis of 1,2-Dichloroethane

4.1.2.1 Direct Chlorination — The manufacture of 1,2-dichloroethane by direct chlorination of ethylene is described in Sect. 3.1.1 and Figs. 1 and 4. Emissions of 1,2-dichloroethane to the environment from this process occur mainly as gases vented from the scrubbing column, head column, or storage tanks; as wastewater used to scrub vented gases or wash crude 1,2-dichloroethane; and as tars produced in the heavy-end column (streams H, 7*a*, 8, and 7*b*, respectively, in Fig. 4). Fugitive emissions also occur as leaks from pressure relief valves, pumps, compressors, agitator seals, valve stems, flanges, loading and unloading operations, and sampling operations (U.S. Environmental Protection Agency, 1975*b*). Several hundred of these potential leaks exist in a typical manufacturing facility. Generally, the greatest losses of 1,2-dichloroethane in a direct chlorination plant are associated with streams 7*a* and 7*b* (Fig. 4) from the 1,2-dichloroethane finishing still — about 0.001 to 0.002 kg per kilogram of vinyl chloride product. Typical values for other streams are indicated in Table 7. Pervier et al. (1974) listed additional detailed estimates of losses for several selected direct chlorination plants.

According to Patterson et al. (1975), overall total emissions of 1,2-dichloroethane to the environment in 1974 from manufacturing plants using the direct chlorination process amounted to about 5 million kilograms, or 0.2% of the 1,2-dichloroethane produced by this method (Table 7). Eimutis and Quill (1977) estimated the 1977 total at about 22 million kilograms, but as previously noted (Sect. 4.1), these two investigating teams defined mixed-process production facilities differently.

The composition of wastewater from a direct chlorination plant obviously varies with operating conditions but usually contains 1,2-dichloroethane as well as hydrogen chloride, vinyl chloride, and chlorine. Table 9 indicates the composition suggested as typical for direct chlorination plants by one research team. The amount of such wastewater produced in one representative direct chlorination plant amounted to 0.82 kg per kilogram of 1,2-dichloroethane (Nardella, 1974). Because of volatility, more 1,2-dichloroethane is lost to air than to other media (Fig. 8). Solid wastes from direct chlorination plants occur mainly as tars from the heavy-ends column (stream 7*b* in Fig. 4). Losses of 1,2-dichloroethane to the environment from these solids amount to about 1.5 kg per metric ton of product (Fig. 9).

4.1.2.2 Oxychlorination — The manufacture of 1,2-dichloroethane by the oxychlorination of ethylene is discussed in Sect. 3.1.2 and outlined

Table 9. Composition of wastewater from a typical manufacturing facility using the direct chlorination process

Compound	Quantity produced (kg/metric ton)
Chlorine	0.87
1,2-Dichloroethane	2.60
Hydrogen chloride	3.8
Vinyl chloride	0.6
Methyl chloride	0.05
Ethyl chloride	0.05
Sodium hydroxide	0.60
Sodium chloride	0.20

Source: Adapted from Hedley et al., 1975, p. 194.

ORNL-DWG 78-21768

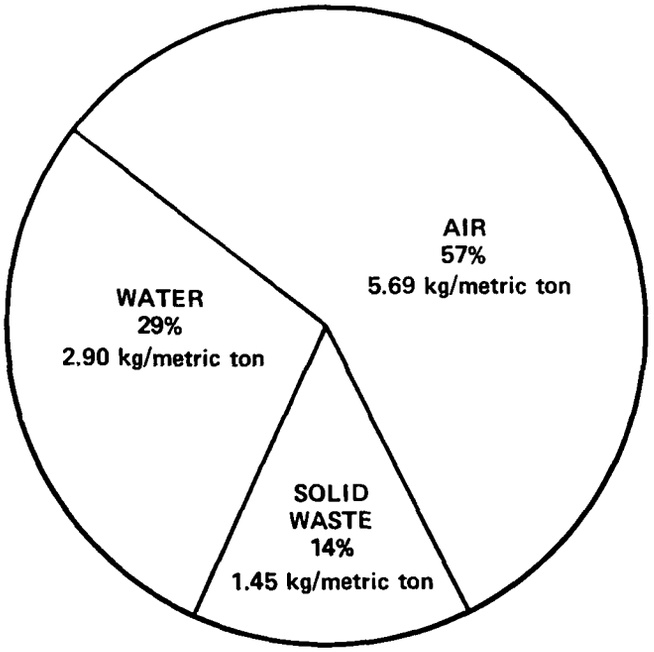

Fig. 9. Losses of 1,2-dichloroethane to the media by the direct chlorination process. Source: Adapted from Hedley et al., 1975.

schematically in Figs. 2 and 4. Losses of 1,2-dichloroethane from the oxychlorination process are considerably greater than those from the direct chlorination process. Patterson et al. (1975) estimated losses in 1974 at 21 million kilograms, or 1.2% of the 1,2-dichloroethane produced by the oxychlorination method (Table 7). Eimutis and Quill (1977) put the annual 1977 losses at about 24 million kilograms (Table 8). According to one report (Schwartz et al., 1974), emissions from the oxychlorination process amounted to 1.75% of all the 1,2-dichloroethane synthesized by this method. Losses occurred chiefly in the process vent gas, distillation vent gas, chlorinated by-product, and heavy ends (Fig. 2) and amounted to 0.70%, 0.45%, 0.37%, and 0.23%, respectively, of the total product output.

Wastewater from the typical oxychlorination process also contains more 1,2-dichloroethane than wastewater from the direct chlorination process. Estimates by the Monsanto Research Corporation (Hedley et al., 1975) placed the concentration of 1,2-dichloroethane in liquid wastes from oxychlorination plants at 4.6 kg per metric ton of product (Fig. 10).

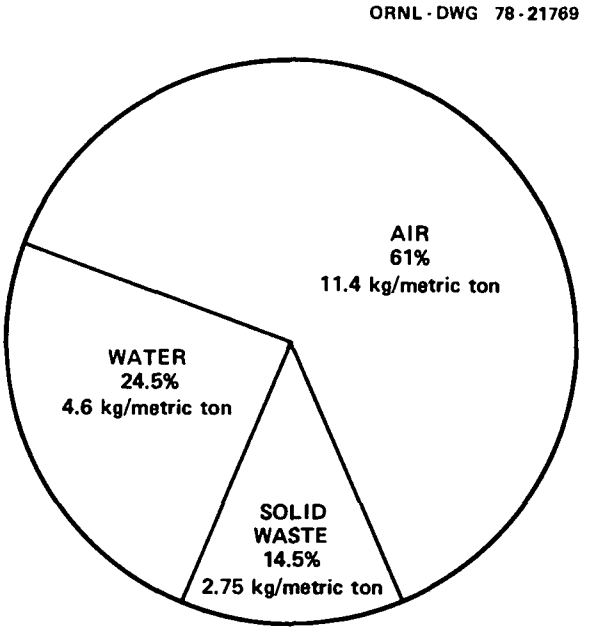

Fig. 10. Losses of 1,2-dichloroethane to the media by the oxychlorination process. Source: Adapted from Hedley et al., 1975.

Solid wastes from oxychlorination plants occur mainly as heavy-end tars from the 1,2-dichloroethane finishing column (stream 9 in Fig. 2) or as spent catalyst from fluidized bed reactors. Losses of 1,2-dichloroethane to the environment from these solids amount to about 2.75 kg per metric ton of product (Fig. 10). Additional estimates of environmental pollutants arising from the manufacture of 1,2-dichloroethane by typical chlorination and hydrochlorination processes are given in Table 10.

4.1.3 Dispersive Uses

Dispersive uses constitute the third major source of emissions to the environment (Patterson et al., 1975). These applications include the use of 1,2-dichloroethane as a solvent for processing pharmaceutical products and animal fats; cleaning textiles; cleaning polyvinyl chloride processing equipment; extracting oil from oil seeds; manufacturing paints, coatings, and adhesives; and fumigating stored grain products (Auerbach Associates, Inc., 1978*a*). In 1974 approximately 6 (Table 7) or 7 (Table 5) million kilograms was consumed in this manner. It is generally assumed that all of this material is eventually released to the atmosphere.

Table 10. Environmental pollutants arising from the manufacture of 1,2-dichloroethane by typical chlorination and hydrochlorination processes

Process	Compound	Amount (kg/metric ton of product)
	Ethylene chlorination	
Vent on the reflux condenser (air)	Ethane	3.0
	1,2-Dichloroethane	7.5
	Methane	3.0
	Chlorine	0.0005
	Hydrogen chloride	0.0005
Reactor section — hydrogen chloride absorber (water)	Chlorine	0.875
	1,2-Dichloroethane	2.45
	Hydrogen chloride	3.8
	Vinyl chloride	0.6
	Methyl chloride	0.005
	Ethyl chloride	0.005
Purification section — caustic storage (water)	1,2-Dichloroethane	0.15
	Sodium hydroxide	0.6
	Sodium chloride	0.2
Purification section — filter effluent (solid)	Mercuric hydroxide	0.0035
	Tars	Trace
	Solids (as carbon)	0.05
Purification section — filter effluent (water)	1,2-Dichloroethane	0.03
	Sodium hydroxide	Trace
Purification section — distillation column bottoms (solid)	1,2-Dichloroethane	5.8
	1,1,2-Trichloroethane	9.8
	Tetrachloroethane	9.8
	Tars	Trace
	Oxychlorination of ethylene	
Water gas from entrainment separator (air)	Ethylene	2.7
	Carbon monoxide	1.2
	1,2-Dichloroethane	8.15
	Vinyl chloride	8.5
	Dichloroethylene	0.45
	Vinylidene chloride	0.05
	Methane and ethane (av)	0.45
Water waste from surge and decanter vessel (water)	Hydrogen chloride	0.35

Source: Adapted from Hedley et al., 1975, pp. 193-195.

Environmental exposure to 1,2-dichloroethane from dispersive uses occurs as point-source losses from industrial sites where these products are manufactured and from use of end products, especially paints, coatings, adhesives, cleaning solvents, and fumigants. No quantitative measurements of exposure to 1,2-dichloroethane arising from these uses (except fumigants) were found in this survey of the literature. A need exists for monitoring data to define levels of 1,2-dichloroethane occurring in typical applications, especially closed rooms freshly coated with paint that contains 1,2-dichloroethane. Such tasks would be greatly simplified if the amount of 1,2-dichloroethane in a product were specified on the container label. At present this information is not normally available to the user. Exposure to 1,2-dichloroethane also occurs through the use or consumption of food, such as fumigated grains, or pharmaceutical products from which all residual processing solvent has not been removed (*Food Chemical News*, 1978). Exposure to 1,2-dichloroethane from such sources may occur without warning to the user. Proprietary cleaning and thinning solvents containing 1,2-dichloroethane may carry label warnings of flammability but rarely identify solution components or give warnings of biological risk.

The amount of 1,2-dichloroethane remaining on fumigated grain requires special mention. Retention of the chlorinated hydrocarbon depends on many factors, some of which are type of grain, extent of grinding, type and concentration of fumigant, exposure conditions, and degree of subsequent ventilation. Berck (1974) cited several other factors. Part of the 1,2-dichloroethane appears to be sorbed physically and part is sorbed chemically. Some investigators reported difficulty in satisfactorily recovering residues of 1,2-dichloroethane from some grains, presumably when chemical sorption has occurred (Berck, 1974). Steaming, toasting, or treatment with selected solvents may release all or only part of the residual 1,2-dichloroethane (Storey, Kirk, and Mustakas, 1972). It is not known if nonvolatile residues of 1,2-dichloroethane in grain are noxious or can be metabolized to toxic substances. In view of these complexities, it is necessary to view cautiously reported statements of the safety of 1,2-dichloroethane residues in fumigated grains.

When a 140-lb bag of 85% extraction wheat flour was fumigated for 48 hr in a 17.5-ft^3 chamber at 25°C with 300 g of 1,2-dichloroethane

applied as a vapor, 1060 ppm of the chlorinated hydrocarbon remained in the surface flour after a ventilation period of 1 hr. A sample from the center of the bag contained 1030 ppm. After standing two days in still air, the surface and center samples contained 210 and 350 ppm respectively. Seven days after exposure, these concentrations had fallen to 22 and 46 ppm respectively. Baking the flour that had been aired seven days removed all detectable traces of 1,2-dichloroethane (Lindgren, Sinclair, and Vincent, 1968). The sensitivity of the analytical method used in this experiment was not specified.

Berck (1974) also performed experiments in which wheat was treated with several fumigants, including 1,2-dichloroethane. He reported that 1,2-dichloroethane residues could not be satisfactorily removed from, or determined in, the treated wheat or resulting flour, bran, middlings, and bread. Nevertheless, in earlier work using a different technique, he established that 51 cereals substrates sorbed 1,2-dichloroethane singly or in mixtures of other fumigants in amounts ranging from 0% to 84% of the applied charge, depending on the type and particle size of the cereal (Berck, 1965). Sosedov (1959) and Whitney (1960) also reported absorption of 1,2-dichloroethane by wheat.

Storey, Kirk, and Mustakas (1972) fumigated soybeans with a 3:1 mixture of 1,2-dichloroethane and carbon tetrachloride for 72 hr at a dosage equivalent to 6 gal of fumigant per thousand bushels of soybeans. Following aeration for 1 hr and standing overnight, the beans were packaged and transferred to the laboratory for milling and extracting. Whole beans contained 51 ppm 1,2-dichloroethane. Residues found in various milling fractions indicated that toasting removed residues from the hulls, but steaming did not remove residues from dehulled soybeans. 1,2-Dichloroethane residues from the soybean flakes passed into the miscella and extracted marc and, subsequently, into the hexane recovered from both of these fractions. The solvent-free oil and meal products did not contain 1,2-dichloroethane residues. Buildup of 1,2-dichloroethane in hexane represents a contamination problem because this solvent is continuously recycled in the extraction process.

Munsey, Mills, and Klein (1957) added 1,2-dichloroethane (40 ppm) and other fumigants to flour at approximately ten times the concentration

normally present in fumigated wheat. The fumigants were added to the flour in an alcohol solution immediately before water was introduced during the normal preparation of bread. The standard 1-lb loaves were baked at 425°C for 30 min. Loaves were cooled for 1 hr and then placed in plastic bags and held for analysis the following day. Bread from treated flour and from untreated flour (blank) contained less than 2 ppm 1,2-dichloroethane. Rolled oats spiked with 60 ppm 1,2-dichloroethane contained about half of the added contaminant after cooking in a normal manner; however, the authors stated, "It seems very unlikely that any measurable amount of these fumigants would be left in the cooked commercial rolled oats resulting from milling fumigated oats." It should be noted that the analytical method on which these conclusions were based was much less sensitive than presently used methods. Residues of 1,2-dichloroethane ranging from 23 to 43 ppm were also found in sacks of wheat several weeks after fumigation by Wit et al. (1969, as cited in Fishbein, 1976).

In summary, varying amounts of 1,2-dichloroethane remain on fumigated grain, depending on grain type, exposure conditions, and degree of subsequent ventilation. Most investigators consider that further processing or cooking operations associated with the preparation of grain for human consumption reduces this 1,2-dichloroethane to a negligible level. However, animals that consume grain directly, such as chickens and cattle, may be exposed to relatively high concentrations of the compound.

Another topic of special interest concerns the exposure received by the U.S. population from 1,2-dichloroethane in gasoline. No discussion of this question was found during an extensive search of the literature, but a similar study dealing with 1,2-dibromoethane (Mara and Lee, 1978) allows some generalized conclusions to be drawn. Leaded gasoline contains 1,2-dichloroethane and 1,2-dibromoethane as lead scavengers. Enough of each compound is added to provide two atoms of chlorine and one atom of bromine for each atom of lead. Leaded gasoline contains approximately 2.5 g of lead (0.012 mole) per gallon; therefore, typical additions of 1,2-dichloroethane and 1,2-dibromoethane amount to 1.2 g (0.012 mole) and 1.1 g (0.006 mole) per gallon respectively.

Exposure to 1,2-dichloroethane in gasoline only occurs prior to combustion because the chlorinated hydrocarbon is destroyed during ignition of the fuel. For most of the population, exposure occurs chiefly through inhalation of fumes during refueling of automobiles. Persons residing near gasoline filling stations or storage facilities may be exposed to somewhat lower concentrations of 1,2-dichloroethane for much longer times. The concentrations of 1,2-dichloroethane to which these motorists and residents are exposed has not been measured experimentally. However, if it is assumed that the rates of evaporation of 1,2-dichloroethane and 1,2-dibromoethane are proportional to their vapor pressures, solubilities, and molecular weights, the concentration of 1,2-dichloroethane in gasoline fumes may be estimated from values for 1,2-dibromoethane calculated by Mara and Lee (1978). The vapor pressure of 1,2-dichloroethane at ambient temperatures is about six times greater than that of 1,2-dibromoethane, and the molar concentration of 1,2-dichloroethane in leaded gasoline is twice as great as 1,2-dibromoethane; therefore, the evaporation rate of 1,2-dichloroethane may reasonably be expected to exceed that of 1,2-dibromoethane by a factor of 12. The same factor should also apply to the ratio of concentrations near an evaporative source. Table 11 shows that the estimated 1,2-dibromoethane concentrations at a self-service gasoline pumping station varied from 45 to 679 ppt. On the basis of the correlation suggested here, the corresponding 1,2-dichloroethane concentration range would be 540 to 8148 ppt. The monitored levels of 1,2-dibromoethane in six urban areas ranged from 8 to 47 ppt (Table 12). On the basis of the suggested correlation, corresponding values for 1,2-dichloroethane would be 96 to 564 ppt. Table 13 gives estimates of human exposure to atmospheric 1,2-dibromoethane from principal emission sources. More than 100 million persons are thought to be exposed to concentrations of 1,2-dibromoethane at an annual average concentration of 1 to 5 ppt. Similar populations are probably exposed to 1,2-dichloroethane at concentrations estimated here at 12 to 60 ppt. In conclusion, it should be emphasized that this discussion on 1,2-dichloroethane exposures from gasoline is intended to be illustrative rather than definitive. Satisfactory data for both 1,2-dibromoethane and 1,2-dichloroethane are lacking, and oversimplified models have been used to compute the results presented above. Consequently, the stated conclusions should be verified by experimental measurements.

Table 11. Estimates of 1,2-dibromoethane exposures from self-service gasoline pumping

Customer	Nozzle time[a] (min)	Amount pumped (gal)	Estimated 1,2-dibromoethane level[b]	
			(μg/m³)	(ppt)
1	2.5	14	0.345	45
2	1.1	8	0.972	126
3	1.6	9	5.220	679

[a]Average nozzle time = 1.7 min.
[b]Time-weighted average exposure = 260 ppt.

Source: Adapted from Mara and Lee, 1978, Table IV-5, p. 29.

Table 12. Monitoring data for 1,2-dibromoethane in urban areas

Location	Number of sites	Average sampling time (hr)	Average 1,2-dibromoethane concentration	
			(μg/m³)	(ppt)
Phoenix	1	17	0.069	8
Los Angeles	1	16	0.110	13
Seattle	2	12	0.083	11
Phoenix	10	18	0.360	47
Los Angeles	9	18	0.124	16
Kansas City[a]	1	18	0.060	8

[a]Suburban area.

Source: Adapted from Mara and Lee, 1978, Table VII-2, p. 57.

Table 13. Summary of human exposures to atmospheric 1,2-dibromoethane from emission sources

Source	Population exposed to 1,2-dibromoethane concentrations[a]						Comparison among sources[c] (10^6 ppt-person-years)
	10.0-50.0 ppt 1.0-5.0 ppt	50.1-100.0 ppt 5.1-10.0 ppt	100.1-200.0 ppt 10.1-20.0 ppt	200.1-400.0 ppt 20.1-40.0 ppt	>400.0 ppt >40.0 ppt	Total[b,c]	
Manufacturing and formulating	580,000	250,000	160,000	99,000	84,000	1,200,000	14.0
Gasoline service stations							
People using self-service					*d*	30,000,000	1.3
People living in the vicinity	100,000,000	10,000,000				110,000,000	380.0
Petroleum refineries	2,000,000	170,000	53,000	16,000	3,000	2,200,000	8.7
Storage and distribution	*e*						
Urban exposures — automotive	24,000,000					24,000,000	72.0

[a]To convert to μg/m³, divide each exposure level by 100. First line represents 8-hr worst-case exposure and second line indicates annual average exposure.
[b]Population estimates are not additive vertically because some double counting may exist.
[c]Totals are rounded to two significant figures.
[d]Estimated at 260 ppt for 1.5 hr per year per person.
[e]Estimated at <<1.0 ppt annual average.

Source: Adapted from Mara and Lee, 1978, Table I-1, p. 3.

4.1.4 Storage and Distribution

Storage and distribution constitute the last major sources of emission of 1,2-dichloroethane to the environment. Losses occur primarily from vents in fixed-roof storage tanks and other rigid containers. To minimize this problem, producers usually store crude 1,2-dichloroethane under a layer of water; however, this technique cannot be used for the dry product. Techniques for controlling losses of the dry product are discussed in Sect. 4.1.7.

The total number and sizes of the storage tanks involved in storing and distributing 1,2-dichloroethane could not be estimated from the available literature, but oxychlorination plants, which account for almost half of U.S. production, typically maintain a storage capacity of 1.5 to 2 days production (Schwartz et al., 1974). If a similar retention of product occurs in all U.S. plants, a storage capacity of 4 to 6 million gallons would be required to accommodate production in 1977. Based on domestic production and a loss factor of 0.06%, an estimated 3 million kilograms of 1,2-dichloroethane was vented to the atmosphere in 1974 (Table 7).

4.1.5 Potential Inadvertent Production in Other Industrial Processes

Inadvertent production of 1,2-dichloroethane could occur in industrial operations in which organic compounds, particularly aliphatic hydrocarbons, are chlorinated or in processes in which chlorinated hydrocarbons are dissociated by heat or other agents; however, no industrial processes were found, other than those previously described in this report, which produce appreciable quantities of 1,2-dichloroethane (Johns, 1976).

4.1.6 Potential Inadvertent Production in the Environment

There are no known sources of 1,2-dichloroethane in nature (Johns, 1976). The presence of low concentrations of this compound in some surface waters and suburban atmospheres is generally attributed to the polluting influence of point sources. The 1,2-dichloroethane in many municipal water systems apparently results from the reaction of organic impurities in the water with chlorine added at the local water treatment plant (Symons et al., 1975).

4.1.7 Control Practices Currently Used

Emissions of 1,2-dichloroethane from manufacturing processes are normally controlled by scrubbers and condensers (Pervier et al., 1974). Scrubbers are used primarily to remove small amounts of hydrogen chloride or chlorine from noncondensed reactor effluents. Water is usually employed as the solvent for hydrogen chloride, but dilute caustic must be used to eliminate chlorine from vent gases. Scrubbers also remove some 1,2-dichloroethane from the gas stream, but their effectiveness varies with operating conditions. Generally, only about one-third of the 1,2-dichloroethane is absorbed. Condensers are designed primarily to recover 1,2-dichloroethane. When cooled to about -23°C, a well-constructed condenser will recover about 98% of the 1,2-dichloroethane in the effluent stream. Capital and operating costs are substantially greater for condensers than for scrubbers. However, the greatly increased recovery efficiency of condensers allows a rapid amortization of these costs (Table 14).

Table 14. Cost data for scrubbers and condensers for control of 1,2-dichloroethane emissions

Parameter	Scrubber	Condenser
Gas rate, lb/hr	65	178
Installed cost, material and labor	$6,300	$125,000
Yearly installed cost, ¢/lb of dichloroethane	0.0066	0.026
Annual operating cost	$2,450	$15,800
Annual value of recovered product	$1,250[a]	$60,800[a]
Annual net operating cost (1972)	$1,200	$45,000[a]
Net operating cost, ¢/lb of dichloroethane	0.00013	0.0095[a]
Overall efficiency, %	25	89.4
1,2-Dichloroethane efficiency, %	39	97.9

[a]Credit.

Source: Adapted from Pervier et al., 1974, Table EDC-IV, p. 149.

Incineration can also be used to prevent release of 1,2-dichloroethane in vent gases. In well-designed equipment, removal of 1,2-dichloroethane, as well as all other pollutants, can approach 100%. However, both hydrogen chloride and chlorine are formed during combustion and must be removed before the combustion products may be released to the atmosphere. Some incineration systems allow recovery of steam or heat, but all are substantially more expensive than current techniques (Table 15); consequently, none are currently used by the industry.

Table 15. Cost data for the control of 1,2-dichloroethane by incineration

Parameter	Direct-fired boiler and caustic scrubber	Thermal incinerator and caustic scrubber	Thermal incinerator, waste heat boiler, and caustic scrubber	Flare system
Total flow,				
lb/hr	78,588	78,588	78,588	17,588
scfm	17,280	17,280	17,280	17,280
Total capital cost	$1,500,000	$750,000	$1,025,000	$132,000
Annual operating cost	$765,600	$503,200	$610,000	$386,700
Steam production, savings	$218,400		$218,400	
Net annual cost	$547,200	$503,200	$391,600	$386,700
Control of all pollutants, %	100	100	100	62
Control of specific pollutant 1,2-dichloroethane, %	100	100	100	

Source: Adapted from Patterson et al., 1975, Table 10, p. II-18.

The control of 1,2-dichloroethane emissions from vented fixed-roof storage tanks requires the use of condensers on the vents or use of floating roofs. The use of floating roofs reduces emissions by about 70% as compared with vented rigid-roof tanks. For existing structures, internal floating covers may be used to achieve results comparable to the installation of new pontoon floating roofs at a substantial reduction in conversion costs (Patterson et al., 1975). According to one report (Schwartz et al., 1974), several manufacturers are currently studying techniques to increase recovery of 1,2-dichloroethane from product storage tank vents.

4.2 MONITORING DATA

Although data for occupational exposure to 1,2-dichloroethane have been reported in the literature for more than four decades (National

Institute for Occupational Safety and Health, 1976), interest in environmental monitoring of this compound is relatively new and only limited data are available. The earliest measurements of this substance in environmental air and drinking water were published in the mid-1970s.

4.2.1 Air

The level of 1,2-dichloroethane in environmental air is generally below the limit of detection of analytical methods as currently applied; consequently, monitoring data for 1,2-dichloroethane in environmental air do not exist in the usual sense of the term. However, several searches for chlorinated hydrocarbons in environmental air have been made which would have revealed 1,2-dichloroethane if it existed at detectable levels. These studies, cited below, define the upper concentration limit of 1,2-dichloroethane in environmental air under conditions existing at the time of sampling.

Grimsrud and Rasmussen (1975) searched for a variety of simple halocarbons in the troposphere of the rural northwestern United States using a highly sensitive analytical technique based on a gas chromatograph linked to a mass spectrometer. The concentration of 1,2-dichloroethane in all samples was less than 5 ppt, the detection limit of the method.

Using chromatographic techniques capable of detecting other aliphatic chlorinated hydrocarbons in the parts-per-billion range, Pearson and McConnell (1975) found no measurable concentration of 1,2-dichloroethane in nonpoint-source atmospheric samples taken near Liverpool, England. Lovelock (1977) also studied halogenated hydrocarbons in the atmosphere of the United Kingdom. Using chromatographic techniques, he observed several common chlorinated compounds at parts-per-billion levels, but 1,2-dichloroethane was not detected.

Singh, Salas, and Cavanagh (1977) conducted two comprehensive field studies of atmospheric halogenated compounds in California using a gas chromatographic method capable of detecting many chlorinated hydrocarbons at parts-per-trillion levels, but no evidence of 1,2-dichloroethane was reported. Hanst (1978) cited 1,2-dichloroethane as an expected, but as yet undetected, component of atmospheric samples.

Although not yet generally detected in the atmosphere, 1,2-dichloroethane has nevertheless been found in the controlled airspace of a grounded spacecraft. Using continuous cryogenic trapping techniques, Harris (1972) measured the concentrations of 39 pollutants in the spacecraft atmosphere by means of a gas chromatograph coupled with a mass spectrometer. The concentration of 1,2-dichloroethane was monitored at 0.011 mg/m^3, or about 3 ppb. The source of the chlorinated hydrocarbon was undetermined; probably, it resulted from insulation, paints, adhesives, and other coatings or components of the spacecraft.

Pellizzari (1977, 1978) collected and analyzed environmental air samples in the vicinity of industrial sources using a gas chromatograph—mass spectrometer technique. He reported atmospheric concentrations of 1,2-dichloroethane near point sources at or near the limit of detection of his equipment. However, these data are not definitive and will not be cited here because, according to the author, "the sensitivity of this technique for the very volatile organic compounds (C_1 to C_5) is inadequate for the purpose of this study."

Air samples taken 1000 m from two Russian plants that used 1,2-dichloroethane as a processing solvent were reported to contain an average concentration of 2 ppm, about 4% of the present U.S. occupational standard for 8-hr exposures (Borisova, 1960).

In summary, it is apparent that the concentration of 1,2-dichloroethane in environmental air distant from point sources is very low, probably parts per trillion or less. The concentration of 1,2-dichloroethane near point sources, such as vinyl chloride monomer manufacturing plants, may also be acceptably low, but monitoring data supporting this premise are required for substantiation. Current monitoring techniques appear to be adequate if sample collecting and analyzing procedures are optimized with respect to 1,2-dichloroethane.

4.2.2 Water

During the National Organics Reconnaissance Survey (NORS) in 1975, the water supplies of 80 U.S. cities were examined for 1,2-dichloroethane and other halogenated organic compounds (Symons et al., 1975). Three raw

and three finished water samples taken at each location were carefully analyzed by a gas chromatographic technique that had a demonstrated detection limit for 1,2-dichloroethane of 0.1 μg/liter, a minimum quantifiable concentration range of 0.2 to 0.4 μg/liter, a relative standard deviation of 5%, and a relative error of 30% or less at the 5 μg/liter concentration level. 1,2-Dichloroethane was not detected frequently nor found in high concentrations in either raw- or finished-water samples. It was present in only 14% and 32.5%, respectively, of the samples examined. The highest concentration observed in finished-water samples was 6 μg/liter. A complete listing of results from this survey is given in Table 16. The locations of the utilities are identified in Table 17.

Subsequent to the National Organics Reconnaissance Survey in 1975, the U.S. Environmental Protection Agency conducted a National Organic Monitoring Survey (NOMS) to determine the frequency of occurrence of specific contaminants in finished drinking water and to provide data for the possible establishment of additional maximum contaminant levels of organic compounds in drinking water. The NOMS covered 113 community water supplies; replicate samples were taken during March-April 1976, May-June 1976, and November 1976 — January 1977. A fourth sampling phase is now in progress. In phase I (March-April 1976) samples were collected and analyzed in the manner described earlier for the National Organic Reconnaissance Survey. After collection these samples were stored at 2°C to 8°C for one to two weeks before analysis. In phase II (May-June 1976), samples were allowed to stand at 20°C to 25°C for three to six weeks prior to analysis. Under these conditions the analytical data reflected equilibrium or terminal reaction values. In phase III (November 1976 — January 1977), all water sources were sampled with and without a chlorine reducing agent present at the time of sampling (quenched and terminal). These conditions were employed to help understand the distribution of total trihalomethane concentrations occurring in processed water. All findings of the NOMS are summarized in Table 18. Average values of 1,2-dichloroethane in water supplies of specific cities are shown in Table 19. In general, 1,2-dichloroethane was detected infrequently (six or less times per survey) and at relatively low concentrations (median concentration was $\leq$2 μg/liter).

Table 16. Water quality data from the National Organics Reconnaissance Survey

Utility number and name[a] (plant name when applicable)	Content of selected compounds in raw and finished water (μg/liter)[b]						Nonvolatile total organic carbon (mg/liter)
	1,2-Dichloroethane	Bromodichloromethane	Dibromochloromethane	Bromoform	Chloroform	Carbon tetrachloride	
1. Lawrence Water Works	NF[c]	<0.2	NF	NF	<0.1	NF	3.7
	NF	9	0.6	NF	91	NF	1.6
2. Waterbury Bureau of Water (Morris Treatment Station)	NF	NF	NF	NF	NF	NF	2.2
	<0.2	10	0.6	<1	93	<2	2.9
3. Metropolitan District Commission (Norumbego Treatment Station)	NF	NF	NF	NF	NF	NF	2.1
	NF	0.8	NF	NF	4	NF	2.0
4. Newport Dept. of Water (South Pond Reservoir Treatment Plant No. 1)	NF	NF	NF	NF	NF	NF	4.6
	NF	42	13	1	103	NF	4.1
5. Dept. of Water Resources	NF	NF	NF	NF	NF	NF	3.0
	NF	7	0.9	NF	22	NF	2.5
6. Puerto Rico Aqueduct and Sewer Authority (Sergio Cuevas Water Treatment Plant)	NF	NF	NF	NF	<0.2	NF	2.0
	NF	29	16	2	47	NF	2.0
7. Passaic Valley Water Commission	<0.2	NF	NF	NF	0.3	<2	3.6
	<0.2	16	2	NF	59	<2	1.9
8. Toms River Water Co.	NF	NF	NF	NF	0.4	NF	<0.05
	NF	<0.8	3	NF	0.6	NF	<0.05
9. Buffalo Water Dept.	NF	NF	NF	NF	NF	NF	2.6
	<0.2	10	4	NF	10	NF	1.7
10. Village of Rhinebeck Water Dept.	3	NF	NF	NF	0.3	NF	3.5
	2	11	1	NF	49	NF	1.6
11. Philadelphia Water Dept. (Torresdale Plant)	3	NF	NF	NF	0.2	NF	2.6
	6	9	5	NF	86	NF	1.7
12. Wilmington Suburban Water Corp. (Stanton Plant)	NF	<0.4	NF	NF	0.3	NF	2.8
	<0.4	11	3	NF	23	<2	1.8
13. Artesian Water Co. (Llangollen Well Field Plant)	NF	NF	NF	NF	0.2	NF	0.05
	<0.2	0.5	1	<1	0.5	NF	0.2
14. Washington Aqueduct (Delacarlia Plant)	NF	NF	NF	NF	<0.2	NF	1.8
	<0.3	8	2	NF	41	NF	1.2

Table 16 (continued)

Utility number and name[a] (plant name when applicable)	Content of selected compounds in raw and finished water (μg/liter)[b]						Nonvolatile total organic carbon (mg/liter)
	1,2-Dichloroethane	Bromodichloromethane	Dibromochloromethane	Bromoform	Chloroform	Carbon tetrachloride	
15. Baltimore City Bureau of Water Supply (Montebello Plant No. 1)	NF NF	NF 11	NF 2	NF NF	NF 32	NF NF	1.8 1.2
16. Western Pennsylvania Water Co. (Hays Mine Plant)	NF NF	NF 2	NF 0.4	NF NF	0.3 8	NF NF	0.9 0.8
17. Strasburg Borough Water System	NF NF	NF NF	NF NF	NF NF	NF <0.1	NF NF	0.2 0.05
18. Fairfax County Water Authority (New Lorton Plant)	NF NF	<0.4 6	NF <0.6	NF NF	<0.2 67	NF NF	4.7 2.7
19. Virginia-American Water Co. Hopewell District	NF NF	NF 1	NF 0.8	NF <2	0.2 6	NF NF	4.2 0.2
20. Huntington Water Co.	<0.3 <0.4	NF 16	NF 5	NF NF	1 23	4 3	2.2 1.0
21. Wheeling Water Dept.	<0.3 <0.4	NF 28	NF 0.17	NF NF	0.2 72	NF NF	3.2 1.8
22. Miami-Dade Water and Sewer Authority (Preston Plant)	<0.2 <0.2	NF 78	NF 35	NF 3	NF 311	<2 NF	9.8 5.4
23. Jacksonville Dept. of Public Works (Highlands Pumping Station)	NF NF	NF 4	NF 2	NF NF	NF 9	NF NF	2.4 2.3
24. Atlanta Waterworks (Chattahoochee Plant)	<0.3 NF	NF 10	NF 2	NF NF	<0.2 36	NF NF	1.3 0.9
25. Owensboro Municipal Utilities	NF NF	NF 20	NF 17	NF 3	NF 13	NF NF	1.7 2.0
26. Greenville Water Dept.	NF <0.2	NF 6	NF 3	NF <1	0.3 17	NF NF	3.3 4.0
27. Tennessee American Water Co.	NF <0.4	NF 9	NF 0.7	NF NF	0.9 30	NF NF	1.1 0.6
28. Memphis Light, Gas and Water Division (Malloy Plant)	NF NF	NF 2	NF 1	NF NF	<0.2 0.9	NF NF	0.2 0.2
29. Metropolitan Water and Sewerage Dept. (Lawrence Plant)	NF NF	NF 5	NF <0.4	NF NF	<0.1 16	NF NF	1.2 0.8

Table 16 (continued)

Utility number and name[a] (plant name when applicable)	Content of selected compounds in raw and finished water (μg/liter)[b]						Nonvolatile total organic carbon (mg/liter)
	1,2-Dichloroethane	Bromodichloromethane	Dibromochloromethane	Bromoform	Chloroform	Carbon tetrachloride	
30. Commissioners of Public Works (Stoney Plant)	NF NF	NF 9	NF 0.8	NF 0.8	<0.2 195	NF NF	11.4 4.1
31. Cincinnati Water Works	NF <0.4	NF 13	NF 4	NF NF	0.5 45	<2 <2	2.3 1.1
32. Chicago Dept. of Water and Sewers (South District Water Filtration Plant), two samples	NF/NF <0.4	NF/<0.5 10	NF/NF 4	NF/NF NF	<0.2/0.4 15	NF/NF NF	1.9/1.7 1.5
33. Clinton Public Water Supply	NF NF	NF 0.5	NF NF	NF NF	<0.2 4	NF NF	7.7 6.7
34. Indianapolis Water Co. (White River Plant)	<0.3 NF	NF 8	NF <2	NF NF	0.1 31	NF 2	5.1 2.6
35. Whiting Water Dept.							
After pre Cl_2	NF	11	3	NF	16	NF	2.0
Before pre Cl_2	NF NF	<0.8 0.3	NF NF	NF NF	0.1 0.5	NF NF	1.9 1.5
36. Detroit Metro Water Dept. (Waterworks Park Plant)	0.5 0.4	NF 9	NF 3	NF NF	<0.2 12	NF NF	2.6 1.2
37*a*. Mt. Clemens Water Purification	NF <0.4	NF 6	NF <2	NF NF	NF 11	NF NF	2.0 1.4
37*b*. Mt. Clemens Water Purification (after replacement of granular activated carbon)	<0.2 NF	NF 3	NF <2	NF NF	0.9 6	NF NF	6.7 1.4
38. St. Paul Water Authority	NF NF	NF 7	NF 2	NF NF	<0.2 44	NF NF	7.9 4.4
39. Cleveland Division of Water (Division Filtration Plant)	NF NF	NF 9	NF 4	NF NF	NF 18	NF NF	2.2 1.8
40. City of Columbus (Dublin Road Plant)	NF NF	NF 8	NF <0.4	NF NF	0.1 134	NF NF	6.8 2.3
41. Dayton Water Works (Ottawa Plant)	<0.2	NF 8	NF 11	NF 4	NF 8	NF <2	0.9 0.7

Table 16 (continued)

Utility number and name[a] (plant name when applicable)	Content of selected compounds in raw and finished water (μg/liter)[b]						Nonvolatile total organic carbon (mg/liter)
	1,2-Dichloroethane	Bromodichloromethane	Dibromochloromethane	Bromoform	Chloroform	Carbon tetrachloride	
42. Indian Hill Water Supply	NF	NF	NF	NF	<0.2	NF	0.8
	NF	7	11	NF	5	NF	0.9
43. Piqua Water Supply	NF	NF	NF	NF	NF	NF	6.0
	<0.2	13	3	NF	131	NF	4.2
44. Mahoning Valley Sanitation District	NF	NF	NF	NF	NF	NF	4.7
	NF	5	<1	NF	80	NF	3.1
45. Milwaukee Water Works (Howard Avenue Purification Plant)	NF	NF	NF	NF	<0.2	NF	2.4
	<0.2	7	3	NF	9	NF	1.7
46. Oshkosh Water Utility	NF	NF	NF	NF	NF	NF	4.5
	<0.2	4	<0.4	NF	26	NF	3.3
47. Terrebonne Parish Waterworks (District No. 1)	NF	NF	NF	NF	NF	NF	5.4
	0.2	32	8	<1	134	NF	3.2
48. Camden Municipal Water Works	NF	NF	NF	NF	NF	NF	3.1
	NF	19	7	NF	40	NF	1.5
49. Town of Logansport Water System	NF	NF	NF	NF	0.7	NF	5.3
	NF	39	24	3	28	NF	3.5
50. City of Albuquerque	NF	NF	NF	NF	NF	NF	<0.05
	NF	1	2	3	0.4	NF	<0.05
51. Oklahoma City Water Dept. (Hefner Plant)	NF	NF	NF	NF	NF	NF	3.6
	<0.4	28	20	6	44	<2	2.8
52. Brownsville Public Utility Board (Plant No. 2)	NF	NF	NF	NF	NF	NF	4.7
	NF	37	100	92	12	NF	3.1
53. Dallas Water Utilities (Bachman Plant)	NF	NF	NF	NF	<0.1	NF	3.4
	NF	4	<2	NF	18	NF	2.9
54. San Antonio City Water Board	NF	NF	NF	NF	NF	NF	0.5
	NF	0.9	3	3	0.2	NF	0.5
55*a*. Ottumwa Waterworks (2/17/75)	NF	NF	NF	NF	<0.2	NF	4.1
	NF	NF	NF	NF	0.8	NF	2.3
55*b*. Ottumwa Waterworks (4/7/75)	NF	NF	NF	NF	NF	NF	4.9
	NF	NF	NF	NF	1	NF	2.4

Table 16 (continued)

Utility number and name[a] (plant name when applicable)	Content of selected compounds in raw and finished water (μg/liter)[b]						Nonvolatile total organic carbon (mg/liter)
	1,2-Dichloro-ethane	Bromo-dichloro-methane	Dibromo-chloro-methane	Bromo-form	Chloro-form	Carbon tetra-chloride	
56. Clarinda Iowa Water Works	NF	NF	NF	NF	<0.2	NF	3.5
	NF	19	4	NF	48	NF	3.0
57. Davenport Water Co.	NF	NF	NF	NF	0.4	NF	6.5
	<0.4	8	<0.6	NF	88	NF	4.4
58. Topeka Public Water Supply (South Plant)	NF	<0.8	NF	NF	0.4	NF	3.4
	NF	38	19	5	88	3	2.2
59. Missouri Utility Co.	0.2	NF	NF	NF	0.2	NF	4.5
	0.3	21	2	NF	116	2	3.6
60. Kansas City (Mo.) Water Dept.	NF	NF	NF	NF	NF	NF	3.4
	NF	8	2	NF	24	NF	1.9
61. St. Louis County Water Co. (Central Plant)	0.3	NF	NF	NF	NF	NF	3.4
	0.4	13	3	<1	55	NF	2.6
62. Lincoln Municipal Water Supply	NF	NF	NF	NF	NF	NF	1.4
	NF	6	4	<2	4	NF	1.4
63. City Water Dept.	NF	NF	NF	NF	NF	NF	9.2
	NF	1	NF	NF	3	NF	5.2
64. Denver Water Board (Marston Plant)	NF	NF	NF	NF	<0.2	NF	2.0
	NF	10	3	NF	14	NF	1.7
65. Pueblo Board of Waterworks (Gardner Plant)	NF	NF	NF	NF	<0.2	NF	1.8
	NF	2	<2	NF	2	NF	1.6
66. Huron Water Dept.	NF	NF	NF	NF	NF	NF	19.2
	NF	116	49	8	309	NF	12.2
67. Salt Lake Water Dept.	<0.4	NF	NF	NF	0.2	NF	1.2
	NF	14	8	NF	20	NF	0.9
68. City of Tucson Water and Sewers Dept. (Plant No. 1)	NF	NF	NF	NF	<0.1	NF	<0.05
	NF	<0.8	2	13	<0.2	NF	<0.05
69. City of Phoenix Water and Sewers Dept. (Verde Plant)	NF	NF	NF	NF	<0.2	NF	1.0
	NF	15	17	<4	9	NF	1.0

Table 16 (continued)

Utility number and name[a] (plant name when applicable)	Content of selected compounds in raw and finished water (μg/liter)[b]						Nonvolatile total organic carbon (mg/liter)
	1,2-Dichloro-ethane	Bromo-dichloro-methane	Dibromo-chloro-methane	Bromo-form	Chloro-form	Carbon tetra-chloride	
70. Dept. of Supply and Purification	NF	NF	NF	NF	<0.2	NF	3.7
	NF	17	15	2	16	NF	2.4
71. Contra Costa County Water Dept.	NF	<0.3	NF	NF	0.3	NF	3.4
(Bollman Plant)	NF	18	6	<1	31	NF	1.9
72. City of Dos Palos Water Dept.	NF	NF	NF	NF	NF	NF	4.4
	NF	53	34	7	61	NF	2.9
73. Los Angeles Dept. of Water and Power	NF	NF	NF	NF	<0.1	NF	1.2
	NF	6	3	NF	32	NF	1.3
74. San Diego Water Utilities Dept.	NF	NF	NF	NF	NF	NF	2.9
(Miramar Plant)	NF	30	19	3	52	NF	2.8
75. San Francisco Water Dept.	NF	NF	NF	NF	NF	NF	1.3
(San Andreas Treatment Plant)	NF	15	4	<0.8	41	NF	1.6
76. Seattle Water Dept. (end of	NF	NF	NF	NF	<0.2	NF	0.9
distribution system)	NF	0.9	NF	NF	15	NF	0.9
77. Douglas Water System	NF	NF	NF	NF	NF	NF	3.4
	NF	0.8	<0.4	NF	40	NF	2.8
78. Idaho Falls Water Dept.	NF	NF	NF	NF	<0.2	NF	0.5
	NF	3	3	NF	2	NF	0.3
79. City of Corvallis Utilities Division	NF	NF	NF	NF	NF	NF	1.0
(Taylor Plant)	NF	3	NF	NF	26	NF	0.4
80. Ilwaco Municipal Water Dept.	NF	NF	NF	NF	0.1	NF	7.5
	NF	35	5	NF	167	NF	3.1
Range	NF-3	NF-0.8	NF	NF	NF-0.9	NF-4	<0.05-19.2
	NF-6	NF-116	NF-100	NF-92	<0.1-311	NF-3	<0.05-12.2

[a]See Table 17 for location of utility.
[b]First line indicates raw-water data; second line indicates finished-water data.
[c]NF — none found.

Source: Adapted from Symons et al., 1975, Table 5, pp. 640-641. Reprinted with permission of the American Water Works Association from JOURNAL AWWA Volume 67, copyrighted 1975.

Table 17. Water utilities studied in the National Organics Reconnaissance Survey[a]

1. Lawrence Water Works
   Lawrence, Mass.
   Merrimack River
2. Waterbury Bureau of Water
   Waterbury, Conn.
   Wigwam and Morris reservoirs
   Morris Treatment Station
3. Metropolitan District Commission
   Boston, Mass.
   Quabbin and Wachusett reservoirs
   Norumbego Treatment Station
4. Newport Dept. of Water
   Newport, R.I.
   Reservoirs
   South Pond Reservoir Treatment Plant No. 1
5. Dept. of Water Resources
   New York, N.Y.
   Croton Reservoir
6. Puerto Rico Aqueduct and Sewer Authority
   San Juan, P.R.
   Lake Carraizo
   Sergio Cuevas Water Treatment Plant
7. Passaic Valley Water Commission
   Little Falls, N.J.
   Passaic River
8. Toms River Water Co.
   Toms River, N.J.
   Ground
   West No. 20
9. Buffalo Water Dept.
   Buffalo, N.Y.
   Lake Erie
10. Village of Rhinebeck Water Dept.
    Rhinebeck, N.Y.
    Hudson River
11. Philadelphia Water Dept.
    Philadelphia, Pa.
    Delaware River
    Torresdale Plant
12. Wilmington Suburban Water Corp.
    Claymont, Del.
    Red Clay and White Clay Creek
    Stanton Plant
13. Artesian Water Co.
    Newark, Del.
    Ground
    Llangollen Well Field Plant
14. Washington Aqueduct
    Washington, D.C.
    Potomac River
    Delacarlia Plant
15. Baltimore City Bureau of Water Supply
    Baltimore, Md.
    Loch Raven Reservoir
    Montebello Plant No. 1
16. Western Pennsylvania Water Co.
    Pittsburgh, Pa.
    Monongahela River
    Hays Mine Plant
17. Strasburg Borough Water System
    Strasburg, Pa.
    Ground
18. Fairfax County Water Authority
    Annandale, Va.
    Occoquan River Impoundment
    New Lorton Plant
19. Virginia American Water Co., Hopewell District
    Hopewell, Va.
    Appomattox River
20. Huntington Water Corp.
    Huntington, W. Va.
    Ohio River
21. Wheeling Water Dept.
    Wheeling, W. Va.
    Ohio River
22. Miami-Dade Water and Sewer Authority
    Miami, Fla.
    Ground
    Preston Plant
23. Jacksonville Dept. of Public Works
    Jacksonville, Fla.
    Ground
    Highlands Pumping Station
24. Atlanta Waterworks
    Atlanta, Ga.
    Chattahoochee River
    Chattahoochee Plant
25. Owensboro Municipal Utilities
    Owensboro, Ky.
    Ground
26. Greenville Water Dept.
    Greenville, Miss.
    Ground
    Water Plant Well No. 2
27. Tennessee American Water Co.
    Chattanooga, Tenn.
    Tennessee River
28. Memphis Light, Gas and Water Division
    Memphis, Tenn.
    Ground
    Malloy Plant

Table 17 (continued)

29. Metropolitan Water and Sewerage Dept.
Nashville, Tenn.
Cumberland River
Lawrence Plant

30. Commission of Public Works
Charleston, S.C.
Edisto River
Stoney Plant

31. Cincinnati Water Works
Cincinnati, Ohio
Ohio River

32. Chicago Dept. of Water and Sewers
Chicago, Ill.
Lake Michigan
South District Water Filtration Plant

33. Clinton Public Water Supply
Clinton, Ill.
Ground

34. Indianapolis Water Co.
Indianapolis, Ind.
White River and wells
White River Plant

35. Whiting Water Dept.
Whiting, Ind.
Lake Michigan

36. Detroit Metro Water Dept.
Detroit, Mich.
Detroit River intake at head of Belle Isle
Waterworks Park Plant

37*a*. Mt. Clemens Water Purification
Mt. Clemens, Mich.
Lake St. Clair

37*b*. Mt. Clemens Water Purification
Mt. Clemens, Mich.
Lake St. Clair

38. St. Paul Water Dept.
St. Paul, Minn.
Mississippi River

39. Cleveland Division of Water
Cleveland, Ohio
Lake Erie
Division Filtration Plant

40. City of Columbus
Columbus, Ohio
Scioto River
Dublin Road Plant

41. Dayton Water Works
Dayton, Ohio
Ground
Ottawa Plant

42. Indian Hill Water Supply
Cincinnati, Ohio
Ground

43. Piqua Water Supply
Piqua, Ohio
Swift Run Lake

44. Mahoning Valley Sanitation District
Youngstown, Ohio
Meander Creek Reservoir

45. Milwaukee Water Works
Milwaukee, Wis.
Lake Michigan
Howard Avenue Purification Plant

46. Oshkosh Water Utility
Oshkosh, Wis.
Lake Winnebago

47. Terrebonne Parish Waterworks District No. 1
Houma, La.
Bayoulafourche

48. Camden Municipal Water Works
Camden, Ark.
Ouachita River

49. Town of Logansport Water System
Logansport, La.
Sabine River

50. City of Albuquerque
Albuquerque, N.M.
Ground

51. Oklahoma City Water Dept.
Oklahoma City, Okla.
Lake Hefner
Hefner Plant

52. Brownsville Public Utility Board
Brownsville, Tex.
Rio Grande River
Plant No. 2

53. Dallas Water Utilities
Dallas, Tex.
Elm Fork, Trinity River
Bachman Plant

54. San Antonio City Water Board
San Antonio, Tex.
Ground

55*a*. Ottumwa Water Works
Ottumwa, Iowa
Des Moines River

55*b*. Ottumwa Water Works
Ottumwa, Iowa
Des Moines River

Table 17 (continued)

56. Clarinda Iowa Water Works
Clarinda, Iowa
Nodaway River

57. Davenport Water Co.
Davenport, Iowa
Mississippi River

58. Topeka Public Water Supply
Topeka, Kan.
Kansas River
South Plant

59. Missouri Utility Co.
Cape Girardeau, Mo.
Mississippi River

60. Kansas City (Mo.) Water Dept.
Kansas City, Mo.
Missouri River

61. St. Louis County Water Co.
St. Louis, Mo.
Missouri River
Central Plant

62. Lincoln Municipal Water Supply
Lincoln, Neb.
Ground

63. City Water Dept.
Grand Forks, N.D.
Red Lake

64. Denver Water Board
Denver, Colo.
Marston Lake
Marston Plant

65. Pueblo Board of Waterworks
Pueblo, Colo.
Arkansas River
Gardner Plant

66. Huron Water Dept.
Huron, S.D.
James River

67. Salt Lake Water Dept.
Salt Lake, Utah
Mountain Dell Reservoir

68. City of Tuscon Water and Sewers Dept.
Tucson, Ariz.
Ground
Plant No. 1

69. City of Phoenix Water and Sewers Dept.
Phoenix, Ariz.
Salt and Verde rivers
Verde Plant

70. Department of Supply and Purification
Coalinga, Calif.
California Aqueduct

71. Contra Costa County Water Dept.
Concord, Calif.
Contra Costa Canal and San Joaquin River
Bollman Plant

72. City of Dos Palos Water Dept.
Dos Palos, Calif.
Dalta-Mendota Canal

73. Los Angeles Dept. of Water and Power
Los Angeles, Calif.
Van Norman Reservoir

74. San Diego Water Utilities Dept.
San Diego, Calif.
Colorado River Aqueduct
Miramar Plant

75. San Francisco Water Dept.
San Francisco, Calif.
San Andreas Reservoir
San Andreas Treatment Plant

76. Seattle Water Dept.
Seattle, Wash.
Cedar River Impoundment
Cedar River System

77. Douglas Water System
Douglas, Alaska
Douglas Reservoir

78. Idaho Falls Water Dept.
Idaho Falls, Idaho
Ground

79. City of Corvallis Utilities Division
Corvallis, Ore.
Wilamette River
Taylor Plant

80. Ilwaco Municipal Water Dept.
Ilwaco, Wash.
Black Lake

[a]The name of the utility is listed first, followed by the city name, the name of the raw-water source, and the name of the treatment plant sampled, if the utility has more than one treatment plant.

Source: Adapted from Symons et al., 1975, Table 1, pp. 638-639. Reprinted with permission of the American Water Works Association from JOURNAL AWWA Volume 67, copyrighted 1975.

Table 18. Summary of findings, National Organic Monitoring Survey, March 1976 through January 1977

Compound	Conditions[a]	Number of positive analyses per number of analyses			Mean concentration for positive results only (μg/liter)			Median concentration for all results (μg/liter)		
		Phase I	Phase II	Phase III	Phase I	Phase II	Phase III	Phase I	Phase II	Phase III
Chloroform	Quenched	102/111[b]	18/18	98/106	47[b]	68	38	27[b]	68	22
	Terminal		112/113	101/105		84	73		59	45
Bromodichloromethane	Quenched	88/111[b]	18/18	100/106	22[b]	16	9.2	9.6	18	5.9
	Terminal		109/113	103/105		18	17		14	11
Dibromochloromethane	Quenched	47/111[b]	15/18	83/106	17[b]	13	7.5	<0.6-3[c]	1.9	2.1
	Terminal		97/113	97/105		14	11		3.5	3.1
Bromoform	Quenched	3/111[b]	6/118	19/106	21[b]	28	13	<3-5[c]	<0.3[c]	<0.3-0.6[c]
	Terminal		38/113	30/105		12	13		<0.3[c]	<0.3-0.6[c]
Dichloroiodomethane	Terminal		85/111	50/105		*d*	*d*		*d*	*d*
1,2-Dichloroethane	Quenched	6/111[b]		1/106	4.3[b]		1.3	<1-2[c]		<0.05-2[c]
	Terminal		2/113	1/105		0.9	1.2		<0.05-1[c]	<0.05-2[c]
1,1,1-Trichloroethane	Quenched			4/105			1.5			<0.2-0.4[c]
	Terminal		19/111	4/104		*d*	1.0		*d*	<0.2-0.4[c]
Carbon tetrachloride	Quenched	3/111[b]		8/106	2.9[b]		6.4	<1-2[c]		<0.2-0.4[c]
	Terminal		10/110	11/105		2.4	4.3		<0.2[c]	<0.2-0.4[c]
1,1,2-Trichloroethylene	Quenched	4/112[b]		10/106	11[b]		2.4	<1-5[c]		<0.2-0.3[c]
	Terminal		28/113	19/105		2.1	1.3		<0.03[c]	<0.2-0.3[c]
Tetrachloroethylene	Quenched			8/106			1.1			<0.2[c]
	Terminal		48/111	9/105		*d*	0.81		*d*	<0.2[c]
Benzene		0/111	7/113	4/16		0.4	0.95	<2[c]	<0.1-0.2[c]	<0.1-0.2[c]
o-Dichlorobenzene			0/113	4/110			2.5		<0.005[c]	<0.005[c]
m-Dichlorobenzene			0/113	2/110			0.10		<0.005[c]	<0.005[c]
p-Dichlorobenzene		2/111	20/113	29/110	2.0	0.14	0.067	<1[c]	<0.005[c]	<0.005[c]
1,2,4-Trichlorobenzene		1/112	2/113	10/110	10	0.29	0.090	<0.4-1[c]	<0.005-0.1[c]	<0.005[c]
Vinyl chloride			2/113			0.14			<0.1[c]	
Methylene chloride		15/109			6.1			<1-2[c]		
2,4-Dichlorophenol		56/108	0/9		0.18			<0.01-0.1[c]	<0.1[c]	
Pentachlorophenol		86/108	5/10		0.07	0.008		<0.01[c]	<0.004[c]	
Bis(2-chloroethyl) ether		0/112	13/113	8/110		0.10	0.024	<5[c]	<0.01[c]	<0.01[c]
Bis(2-chloroisopropyl) ether			8/113	7/110		0.17	0.11		<0.01[c]	<0.01[c]
Polychlorinated biphenyls		2/110	4/113	2/110	0.76	0.13	0.15	<0.12[c]	<0.1-0.2[c]	<0.1[c]

Table 18 (continued)

Compound	Conditions[a]	Number of positive analyses per number of analyses			Mean concentration for positive results only (μg/liter)			Median concentration for all results (μg/liter)		
		Phase I	Phase II	Phase III	Phase I	Phase II	Phase III	Phase I	Phase II	Phase III
Fluoranthene		17/110	0/9		0.02			<0.01[c]	<0.05-0.1[c]	
3,4-Benzofluoranthene		0/110	0/9					<0.02-0.05[c]	<0.05-0.1[c]	
1,2-Benzpyrene		0/110	0/9					<0.02-0.05[c]	<0.05-0.1[c]	
3,4-Benzopyrene		0/110	0/9					<0.02-0.05[c]	<0.05-0.1[c]	
Indeno(1,2,3-cd)pyrene		0/110	0/9					<0.02-0.05[c]	<0.05-0.1[c]	
Nonpurgeable total organic carbon		108/112	108/113	107/110	2.1[e]	2.1[e]	2.4[e]	1.8[e]	1.8[e]	2.0[e]
Chemical oxygen demand		80/60			7.0[e]			6.9[e]		
Carbon chloroform extract		111/111	107/107	109/109	0.55[e]	1.1[e]	1.2[e]	0.53[e]	0.92[e]	1.0[e]

[a]Quenched — samples were preserved with sodium thiosulfate at time of sampling, shipped at ambient temperature, stored at 20°C to 25°C for three to six weeks prior to analysis; terminal — samples were shipped at ambient air temperature, stored at 20°C to 25°C for three to six weeks prior to analysis.

[b]Samples were shipped iced (4°C), stored at 2°C to 8°C for one to two weeks prior to analysis.

[c]Minimum quantifiable limits.

[d]Not quantified.

[e]Unit of measurement is milligrams per liter.

Source: Compiled from Mello, 1978.

Table 19. 1,2-Dichloroethane in potable water supplies, National Organic Monitoring Survey, March 1976 through January 1977 (μg/liter)

Location	Phase I, iced[a]	Phase II, terminal[b]	Phase III	
			Terminal[b]	Quenched[c]
Albuquerque, N.M.	ND 1000[d]	ND 50	ND 50	ND 50
Amarillo, Tex.	ND 100	ND 500	ND 500	ND 100[e]
Annandale, Va.	7.0	ND 1000	ND 2000[e]	ND 1000[e]
Atlanta, Ga.	ND 2000	ND 1000	ND 1000	ND 500
Baltimore, Md.	ND 1000	ND 1000	ND 500	ND 500
Baton Rouge, La.	ND 2000	ND 50	ND 100	ND 100
Billings, Mont.	ND 2000	ND 1000	ND 50	ND 50
Birmingham, Ala.	ND 1000	ND 1000	Lost	Lost
Bismarck, N.D.	ND 1000	ND 1000	ND 1000[e]	ND 500
Boise, Idaho	ND 1000	ND 50	Lost	Lost
Boston, Mass.	ND 1000	ND 50	ND 100	ND 100
Brownsville, Tex.	ND 1000	ND 500	ND 1000	ND 1000
Buffalo, N.Y.	Lost	ND 500	ND 1000	ND 100
Burlington, Vt.	ND 2000	ND 1000	ND 2000	ND 1000
California Aqueduct, California	ND 2000	ND 1000	ND 1000[e]	ND 1000
Camden, Ark.	ND 1000	ND 1000	ND 2000	ND 1000
Cape Girardeau, Mo.	ND 1000	ND 1000	ND 2000	ND 1000
Casper, Wyo.	ND 1000	ND 500	ND 100	ND 1000
Cheyenne, Wyo.	ND 2000	ND 1000	ND 2000	ND 2000
Charleston, S.C.	ND 2000	ND 1000	ND 1000	ND 1000[e]
Charlotte, N.C.	ND 2000	ND 1000	ND 1000	ND 500
Chattanooga, Tenn.	ND 1000	ND 1000	ND 2000	ND 1000[e]
Chicago, Ill.	ND 1000	ND 500	Lost	Lost
Cleveland, Ohio	ND 2000	ND 500	ND 500	ND 500[e]
Columbus, Ohio	8.	ND 1000	ND 1000	ND 1000
Concord, Calif.	ND 2000	ND 500	ND 100	ND 100
Corvallis, Ore.	ND 1000	ND 1000	ND 2000	ND 1000
Dallas, Tex.	ND 2000	ND 1000	ND 1000[e]	ND 500[e]
Davenport, Iowa	ND 2000	ND 1000	ND 1000	ND 1000[e]

Table 19 (continued)

Location	Phase I, iced[a]	Phase II, terminal[b]	Phase III	
			Terminal[b]	Quenched[c]
Dayton, Ohio	ND 2000	ND 500	ND 500	ND 100
Denver, Colo.	ND 1000	ND 500	ND 1000	ND 1000
Des Moines, La.	ND 2000	ND 50	ND 50	ND 50[e]
Detroit, Mich.	2.	ND 500	ND 500	ND 50
Duluth, Minn.	ND 1000	ND 50	ND 500	ND 50
Elizabeth, N.J.	ND 1000	ND 1000	ND 500	ND 500
Erie, Pa.	ND 2000	ND 500	ND 1000[e]	ND 100
Eugene, Ore.	ND 1000	ND 500	ND 1000	ND 100
Fort Wayne, Ind.	ND 1000	ND 1000	ND 500	ND 1000
Fort Worth, Tex.	ND 2000	ND 50	ND 50	ND 50[f]
Fresno, Calif.	ND 1000	ND 50	Lost	Lost
Grand Rapids, Mich.	ND 2000	ND 1000	ND 1000	ND 1000
Greenville, Miss.	ND 1000	ND 50	ND 1000	ND 100
Hackensack, N.J.	ND 1000	ND 1000	ND 1000[e]	ND 2000
Hagerstown, Md.	ND 2000	ND 1000	ND 1000	ND 1000
Hartford, Conn.	ND 2000	ND 500	ND 500	ND 500
Houston, Tex.	ND 1000	ND 1000	ND 2000	ND 2000
Huntington, W. Va.	ND 1000	ND 1000	1.2	1.30
Huron, S.D.	ND 2000	ND 1000	ND 2000	ND 1000
Illwaco, Wash.	ND 2000	ND 1000	ND 1000	ND 1000
Indianapolis, Ind.	ND 1000	ND 1000	ND 1000	ND 1000
Jackson, Miss.	ND 1000	ND 1000	ND 2000	ND 1000
Jacksonville, Fla.	ND 1000	ND 50	ND 100	ND 50
Jersey City, N.J.	ND 2000	ND 1000	ND 1000	ND 500
Kansas City, Mo.	ND 2000	ND 500	ND 500	ND 500
Las Vegas, Nev.	ND 2000	ND 500	ND 1000	ND 500
Lincoln, Neb.	ND 1000	ND 50	ND 100[e]	ND 500[e]
Little Rock, Ark.	ND 1000	ND 1000	Lost	Lost
Los Angeles, Calif.	ND 1000	ND 500	ND 1000	ND 1000
Louisville, Ky.	ND 1000	ND 1000	ND 1000	ND 500
Madison, Wis.	ND 1000	0.02	ND 100	ND 100

Table 19 (continued)

Location	Phase I, iced[a]	Phase II, terminal[b]	Phase III	
			Terminal[b]	Quenched[c]
Manchester, N.H.	ND 1000	ND 1000	ND 1000	ND 1000
Melbourne, Fla.	ND 1000	ND 1000	ND 2000[f]	ND 1000
Memphis, Tenn.	ND 2000	ND 50	ND 500	ND 100
Milwaukee, Wis.	ND 1000	ND 500	ND 100[e]	ND 100
Monroe, Mich.	ND 2000	ND 500	ND 500	ND 500
Montgomery, Ala.	3.	ND 1000	ND 2000	ND 1000
Mount Clemens, Mich.	3.	ND 1000	ND 500	ND 500
Nashville, Tenn.	ND 2000	ND 500	ND 1000	ND 1000
New Haven, Conn.	ND 2000	ND 1000	ND 1000	ND 50[e]
Newport, R.I.	ND 2000	ND 1000	ND 1000	ND 2000
Norfolk, Va.	ND 2000	ND 1000	ND 2000	ND 2000
Oklahoma City, Okla.	ND 2000	ND 1000	ND 1000	ND 1000[e]
Oakland, Calif.	ND 2000	ND 500	ND 1000	ND 2000[e]
Omaha, Neb.	ND 1000	ND 1000	ND 1000	ND 500[e]
Passaic Valley, N.J.	ND 2000	ND 1000	ND 2000	ND 500
Phoenix, Ariz.	ND 2000	ND 1000	ND 1000	ND 500[e]
Portland, Me.	ND 1000	ND 50	ND 100	ND 100
Portland, Ore.	ND 2000	ND 500	ND 500	ND 500[e]
Poughkeepsie, N.Y.	ND 2000	1.8	Lost	Lost
Providence, R.I.	ND 1000	ND 500	ND 100	ND 100
Provo, Utah	ND 2000	ND 80	ND 50	ND 100
Pueblo, Colo.	ND 1000	ND 50	ND 100	ND 100
Richmond, Va.	ND 1000	ND 500	ND 1000	ND 1000[f]
Rockford, Ill.	ND 1000	ND 50	ND 100	ND 100
Rome, Ga.	ND 2000	ND 1000	ND 2000	ND 1000
Sacramento, Calif.	ND 1000	ND 500	ND 1000	ND 1000
Salt Lake City, Utah	ND 2000	ND 500	ND 2000	ND 1000
San Antonio, Tex.	ND 1000	ND 50	ND 100	ND 100
San Diego, Calif.	ND 1000	ND 1000	ND 2000	ND 50
San Francisco, Calif.	ND 2000	ND 1000	ND 2000	ND 1000
Santa Fe, N.M.	ND 3000	ND 1000	ND 2000[e]	ND 2000

Table 19 (continued)

Location	Phase I, iced[a]	Phase II, terminal[b]	Phase III	
			Terminal[b]	Quenched[c]
Sioux Falls, S.D.	ND 2000	ND 1000	Lost	ND 1000
South Pittsburg, Pa.	ND 1000	ND 500	ND 100[e]	ND 100
Spokane, Wash.	ND 1000	ND 50	ND 100	ND 100
Springfield, Mass.	ND 2000	ND 500	ND 1000	ND 1000
St. Croix, Virgin Islands	ND 2000	ND 50	ND 50	ND 100
St. Louis County, Mo.	ND 1000	ND 1000	ND 1000[e]	ND 1000
St. Paul, Minn.	ND 1000	ND 1000	ND 2000	ND 2000[e]
Syracuse, N.Y.	ND 1000	ND 500	ND 1000	ND 100
Tacoma, Wash.	ND 1000	ND 50	Lost	Lost
Tampa, Fla.	ND 2000	ND 1000	ND 2000	ND 2000
Terre Bonne Parish, La.	ND 2000	ND 1000	ND 1000	ND 500
Toledo, Ohio	ND 2000	ND 500	ND 500	ND 100
Topeka, Kan.	ND 1000	ND 1000	ND 2000	ND 1000
Tulsa, Okla.	ND 2000	ND 500	ND 500	ND 500
Washington, D.C.	ND 2000	ND 1000	ND 1000	ND 1000
Waterbury, Conn.	3.	ND 1000	ND 1000	ND 500
Waterford Township, N.Y.	ND 2000	ND 1000	ND 2000	ND 1000
Wheeling, W. Va.	ND 2000	ND 1000	ND 2000	ND 1000
Whiting, Ind.	Lost	ND 50	ND 100[e]	ND 100[e]
Wichita, Kan.	ND 1000	ND 80	ND 1000[e]	ND 1000
Wilmington Stanton, Del.	ND 2000	ND 1000	ND 1000	ND 500
Yuma, Ariz.	ND 2000	ND 500	ND 500	ND 500

[a]Samples were shipped iced and stored at 2°C to 8°C for one to two weeks.

[b]Samples were shipped at ambient temperature and stored at 20°C to 25°C for three to six weeks.

[c]Samples were preserved with sodium thiosulfate, shipped at ambient temperature, and stored at 20°C to 25°C for three to six weeks.

[d]ND — value was below the detection limit. The number following is the detection limit multiplied by 1000.

[e]Value is the average of duplicate results.

[f]Value is the average of triplicate results.

Source: Compiled from Mello, 1978.

During 1975 and 1976 a total of 204 water samples were collected from 14 heavily industrialized U.S. river basins by investigators from the University of Illinois at Urbana-Champaign (Ewing et al., 1977). Gas chromatographic and mass spectrometric techniques were used to identify and measure volatile organic compounds present in the samples in concentrations of 1 ppb or more. 1,2-Dichloroethane was detected in 53 of the 204 samples. Concentrations were near 1 ppb in most samples, but one sample from the Delaware River near Bridesburg, Pennsylvania, contained 90 ppb. Concentrations of 1,2-dichloroethane contained in other samples are given in Table 20. Sample sites are indicated in Fig. 11.

1,2-Dichloroethane and related chlorinated hydrocarbons have not been reported in well waters. Apparently, these compounds tend to be more or less completely adsorbed as surface waters percolate to the aquifers (Pearson and McConnell, 1975). Using analytical methods having a detection limit in the parts-per-billion range, Pearson and McConnell (1975)

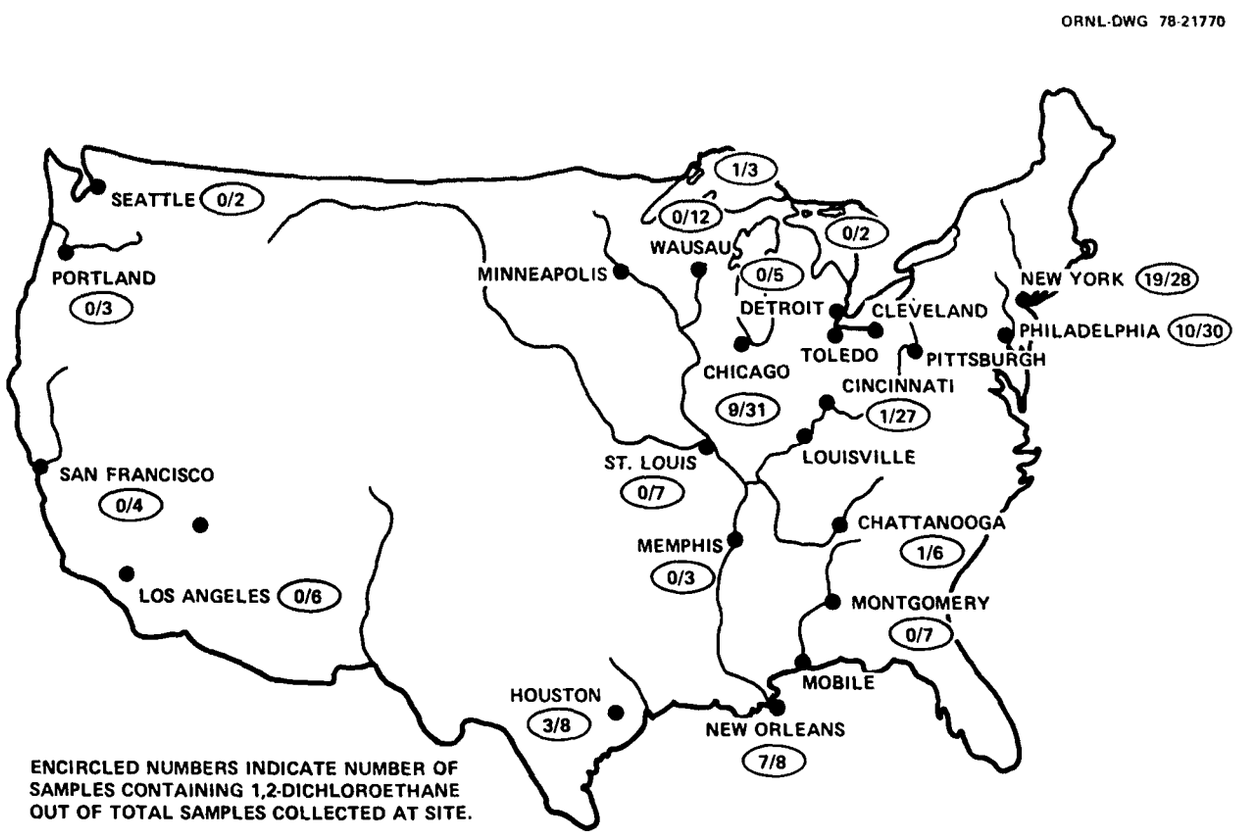

Fig. 11. Industrialized areas sampled. Source: Adapted from Ewing et al., 1977, Fig. 1, p. 2.

Table 20. Concentration of 1,2-dichloroethane in surface waters from industrial areas

Site	Nearest town	1,2-Dichloroethane concentration (ppb)
	Chicago area and Illinois River Basin	
Chicago Sanitary and Ship Canal	Lockport, Ill.	1
North Side Sewage Treatment Plant	Lincolnwood, Ill.	1
North Side Sewage Treatment Plant	Lincolnwood, Ill.	1
Calumet River	Chicago, Ill.	6
Calumet-Sag Channel	Blue Island, Ill.	1
Des Plaines River	Elwood, Ill.	1
Illinois River	Dresden, Ill.	2
Illinois River	Utica, Ill.	1
Illinois River	Hennepin, Ill.	1
	Delaware River Basin	
Delaware River	Woodland Beach, Del.	2
Delaware River	Port Penn, Del.	1
Delaware River	Pigeon Point, Del.	12
Delaware River	Marcus Hook, Pa.	15
Delaware River	Paulsboro, N.J.	9
Delaware River	Philadelphia, Pa.	15
Delaware River	Philadelphia, Pa.	11
Delaware River	Bridesburg, Pa.	90
Delaware River	Pigeon Point, Del.	8
Delaware River	Torresdale, Pa.	4
	Hudson River Basin	
Raritan Bay	Tottenville, N.Y.	10
Raritan Bay	Perth Amboy, N.J.	9
Arthur Kill	Perth Amboy, N.J.	8
Arthur Kill	Sewaren, N.J.	9
Arthur Kill	Chrome, N.J.	9
Arthur Kill	Graselli, N.J.	8
Arthur Kill	Port Elizabeth, N.J.	1
Newark Bay	Newark, N.J.	3
Hudson River	Bayonne, N.J.	2
Hudson River	Rosebank, N.J.	2
Hudson River	Sandy Hook, N.J.	2
Hudson River	Beacon, N.Y.	1
Hudson River	Poughkeepsie, N.Y.	2
Hudson River	Poughkeepsie, N.Y.	2
Hudson River	Glenmont, N.Y.	5

Table 20 (continued)

Site	Nearest town	1,2-Dichloroethane concentration (ppb)
Passaic River	Newark, N.J.	1
Hackensack River	Jersey City, N.J.	1
Hudson River	Fort Lee, N.J.	1
Hudson River	Fort Montgomery, N.Y.	1
Mississippi River Basin, Alabama, and Texas		
Houston Ship Channel	Morgan Point, Tex.	1
Houston Ship Channel	Lynchburg, Tex.	1
Houston Ship Channel	Deer Park, Tex.	2
Mississippi River	Venice, La.	1
Mississippi River	Port Sulphur, La.	2
Mississippi River	Luling, La.	1
Mississippi River	Lutcher, La.	2
Mississippi River	New Orleans, La.	1
Mississippi River	New Orleans, La.	1
Mississippi River	Plaquemine, La.	1
Ohio River Basin		
Ohio River	Joppa, Ill.	2
Tennessee River	Paducah, Ky.	3
Kanawha River	Winfield, W. Va.	1
Great Lakes and Tennessee River Basin		
Fields Brook	Ashtabula, Ohio	4
Lake Superior	Beaver Bay, Wis.	1

Source: Adapted from Ewing et al., 1977, appendix.

also failed to find evidence of 1,2-dichloroethane in samples of Liverpool Bay water and marine sediments.

Based on the limited data presented in this section, it appears that 1,2-dichloroethane is not usually present in subterranean waters, is only occasionally present at the parts-per-billion level in municipal raw-water supplies, and is not commonly present at the parts-per-billion level, even in chlorine-treated municipal waters or in surface waters from heavily industrialized regions. These observations are consistent with the short half-life of 1,2-dichloroethane in water, but more monitoring is required

near point sources to provide assurance that short-term fluctuations of appreciably greater magnitude do not sometimes occur.

4.2.3 Biota

Pearson and McConnell (1975) searched for a variety of simple aliphatic chlorocarbons in marine biota near Liverpool, England, using an analytical technique generally capable of detecting concentrations of such compounds in the parts-per-billion range, based on wet tissue mass. Although trichloroethane, perchloroethylene, trichloroethylene, chloroform, and hexachlorobutadiene were frequently found, no evidence of 1,2-dichloroethane was reported. Species examined included *Nereis diversicolor* (ragworm), *Mytilus edulis* (mussel), *Cerastoderma edule* (cockle), *Ostrea edulis* (oyster), *Buccinum undatum* (whelk), *Crepidula fornicata* (slipper limpet), *Cancer pagurus* (crab), *Eupagurus bernhardus* (hermit crab), *Crangon crangon* (shrimp), *Asterias rubens* (starfish), *Solaster* sp. (sunstar), *Echinus esculentus* (sea urchin), *Enteromorpha compressa* (marine alga), *Ulva lactuca* (marine alga), *Fucus vesiculosus* (marine alga), *F. serratus* (marine alga), *F. spiralis* (marine alga), *Raja clavata* (ray), *Pleuronectes platessa* (plaice), *Platychthys flesus* (flounder), *Limanda limanda* (dab), *Scomber scombrus* (mackerel), *Solea solea* (sole), *Aspitrigla cuculus* (red gurnard), *Trachurus trachurus* (scad), *Trisopterus luscus* (pout), *Squalus acanthias* (spurdog), *Gadus morrhua* (cod), *Sula bassana* (gannet), *Phalacrocerax aristotelis* (shag), *Alca torda* (razorbill), *Uria aalge* (guillemot), *Rissa tridactyla* (kittiwake), *Cygnus olor* (swan), *Gallinula chloropus* (moorhen), *Anas platyrhyncos* (mallard), *Halichoerus grypus* (grey seal), and *Sorex araneus* (common shrew).

5. ENVIRONMENTAL CHARACTERISTICS

Although some well-known chlorinated hydrocarbons, such as DDT and polychlorinated biphenyl (PCB), have high persistence in the environment, this behavior is not necessarily typical of all chlorinated hydrocarbons. Some simple aliphatic organochlorine compounds are slow to break down in the hydrosphere, but due to high volatility, they rapidly transfer to the atmosphere, where photooxidation occurs with characteristic half-lives of weeks or months (Pearson and McConnell, 1975; Spence and Hanst, 1978). This latter pattern of behavior characterizes 1,2-dichloroethane; it has a long hydrolysis half-life (Sect. 5.1.2), a short vaporization half-life from water (Sect. 5.1.4), and a relatively short photooxidative half-life in the atmosphere (Sect. 5.1.1). 1,2-Dichloroethane is thus unlikely to accumulate in the environment. It should be noted, however, that one of the photooxidative products of 1,2-dichloroethane is chloroacetyl chloride (Sect. 5.1.1), which may be sufficiently stable to reach the stratosphere and interact destructively with the ozone layer.

5.1 CHEMICAL AND PHYSICAL INTERACTIONS

Airborne or waterborne organic compounds may interact with the environment in different ways; generally, the most significant routes are oxidation, hydrolysis, and photolysis. Adsorption and evaporation may also be important. The manner in which 1,2-dichloroethane responds to these environmental influences is discussed in the following subsections.

5.1.1 Oxidation and Photolysis

The current environmental literature does not carefully distinguish between oxidative and photolytic reactions of 1,2-dichloroethane; consequently, these processes will be discussed together. Oxidative processes in the atmosphere are usually initiated and controlled by the amount of either HO radical or ozone present; in aquatic systems the concentration of peroxy or alkoxy radicals ($RO_2\bullet$ and $RO\bullet$) is frequently rate controlling. Photochemical reactions occur when one or more reactants absorb

ultraviolet energy from sunlight. However, the presence of sunlight also increases the concentration of HO radicals in the atmosphere or of peroxy and alkoxy radicals in aquatic systems; consequently, oxidative and photolytic processes tend to occur simultaneously under environmental conditions. The combined process is sometimes called photooxidation.

Photooxidative reactions involving atmospheric 1,2-dichloroethane probably result in monochloroacetyl chloride, hydrogen chloride, formyl chloride, and monochloroacetic acid (Spence and Hanst, 1978). Alcohols, ketones, alkyl nitrates, and cleavage products arising from intermediate alkoxy radicals are also possible products. Preliminary data indicate that the half-life of 1,2-dichloroethane in the atmosphere may be about three to four months (Pearson and McConnell, 1975; U.S. Environmental Protection Agency, 1975*a*). Based on an average HO radical concentration of 0.8×10^{-14} *M*, Radding et al. (1977) estimated a combined oxidative-photolysis half-life of 234 hr. A definitive determination of the half-life remains to be made, but it is apparent from available estimates that the lifetime of 1,2-dichloroethane in the troposphere, although short in an absolute sense, is sufficiently long for aerial transport to play a major role in the distribution of 1,2-dichloroethane. According to some investigators, the chlorinated reaction products from the photooxidation of 1,2-dichloroethane, particularly monochloroacetyl chloride, may be significant with respect to the ozone depletion controversy, if these compounds are sufficiently stable to reach the stratosphere (U.S. Environmental Protection Agency, 1975*a*). In contrast, other authors discount such a possibility (Patterson et al., 1975). It is apparent that more research is needed to resolve this question.

The oxidation or photooxidation of 1,2-dichloroethane in aerated water seems to be very slow, probably because of the low concentrations (approximately 10^{-14} *M*) of peroxy and alkoxy radicals (Pearson and McConnell, 1975). Qualitatively, the half-life of 1,2-dichloroethane exposed under these conditions appears to be greater than six months; however, firm data supporting this estimate are lacking (Dilling, Tefertiller, and Kallos, 1975; McConnell, Ferguson, and Pearson, 1975; Radding et al., 1977).

5.1.2 Hydrolysis

The vicinal dihalogen derivatives of paraffin hydrocarbons are characteristically resistant to hydrolysis, and 1,2-dichloroethane is no exception. It is virtually unreactive in water. Based on a rate constant of approximately 5×10^{-13} sec^{-1} at pH 7 and 25°C, Radding et al. (1977) estimated a hydrolysis half-life of approximately 50,000 years. This estimate is much longer than the 6- to 18-month half-lives observed for similar, but not identical, compounds subjected to a combination of hydrolysis, oxidation, and photolysis (Dilling, Tefertiller, and Kallos, 1975). Nevertheless, it appears that hydrolysis of 1,2-dichloroethane is slow as compared with other pertinent environmental processes, such as volatilization or photolysis.

5.1.3 Adsorption

Dilling, Tefertiller, and Kallos (1975) and McConnell, Ferguson, and Pearson (1975) studied the removal of compounds similar to 1,2-dichloroethane from water by adsorption on several common substrates. Dilling, Tefertiller, and Kallos observed little or no adsorption of chlorinated hydrocarbons on clay, limestone, sand, and peat moss in laboratory experiments involving aqueous solutions containing 1 ppm organic contaminant. McConnell, Ferguson, and Pearson reached similar conclusions for adsorption of chlorinated hydrocarbons from seawater by coarse gravels but found relatively high adsorption by Liverpool Bay sediments rich in organic detritus. The divergent conclusions of these studies probably reflect different experimental conditions. The hydrocarbon concentrations in the experiments of Dilling, Tefertiller, and Kallos were well below the solubility limits of the various compounds used, and adsorption under these conditions is less likely than in Liverpool Bay, which receives large volumes of industrial and domestic effluents.

5.1.4 Evaporation

The relatively high vapor pressure of 1,2-dichloroethane causes rapid volatilization of the hydrocarbon from aqueous effluents. After

96 min at ambient temperature, about 90% of the 1,2-dichloroethane initially present in water at a concentration of 1 ppm evaporated (Dilling, Tefertiller, and Kallos, 1975). This rate corresponds to a vaporization half-life of 29 min. Comparison of these data with those for other environmental removal processes indicates that volatilization is the chief process for removal of 1,2-dichloroethane from water.

5.2 BIOACCUMULATION, BIOMAGNIFICATION

The physical and chemical properties of 1,2-dichloroethane exhibit opposing tendencies with respect to bioaccumulation. Theoretically, the lipophilic and somewhat nonreactive nature of 1,2-dichloroethane favors bioaccumulation, but its high vapor pressure and low latent heat of vaporization argue for unchanged elimination of the compound via the lungs. In fact, there is no firm evidence for bioaccumulation of 1,2-dichloroethane in food chains under environmental conditions (Radding et al., 1977). Pearson and McConnell (1975) searched for simple aliphatic chlorocarbons in several trophic levels of the marine environment near the industrialized area of Liverpool, England. They found no evidence of 1,2-dichloroethane. Furthermore, they observed no tendency for other more abundant aliphatic chlorocarbons, such as chloroform, carbon tetrachloride, trichloroethylene, perchloroethylene, and trichloroethane to bioaccumulate or biomagnify under environmental conditions. In laboratory studies of accumulation by oysters and fish of 1,2-dichloroethane labeled with ^{14}C, Pearson and McConnell did see rapid storage of the chlorinated hydrocarbon up to an asymptotic level, but this accumulation was followed by loss of 1,2-dichloroethane when the organisms were transferred to clean seawater. Parallel analyses by chromatographic techniques showed even more reduced levels of 1,2-dichloroethane in the organisms, indicating that some metabolism of the compound occurred in the tissues of both fish and oysters.

Jernelov, Rosenberg, and Jensen (1972) investigated the bioaccumulation of components of EDC-tar in marine animals taken near EDC-tar dumping sites in the North and Norwegian seas. They reported accumulation factors

between 10 and 3000 for several EDC-tar components. However, the components were not identified, and it is uncertain how this evidence relates to 1,2-dichloroethane (Rosenberg, Grahn, and Johansson, 1975).

5.3 BIOLOGICAL DEGRADATION

Literature references to microbial degradation of simple chlorinated hydrocarbon compounds are few and conflicting. Some authors report that these compounds are not metabolized by either aerobic or anaerobic microorganisms (Pearson and McConnell, 1975). Other microbiologists believe that biodegradation can occur via cometabolic processes (Horvath, 1972), but no evidence supporting biodegradation of 1,2-dichloroethane has been found. There is general agreement, however, that mammals metabolize these compounds, producing chlorinated acetic acids either directly or via chloroethanols. All of the resulting chlorinated acetic acids are susceptible to further degradation by microorganisms in seawater (McConnell, Ferguson, and Pearson, 1975). At least two of these metabolites (monochloroacetic acid and 2-chloroethanol) are more toxic to mice than 1,2-dichloroethane (Ambrose, 1950; Woodard et al., 1941).

Biological degradation is an important mechanism in the present operation of municipal sewage treatment plants. Accordingly, it is of interest how 1,2-dichloroethane interacts with these systems. Concentrations of all chlorinated hydrocarbons in raw sewage are normally less than 0.1 mg/liter, and typically, levels of 1,2-dichloroethane are only a small fraction of this total. According to McConnell, Ferguson, and Pearson (1975), inhibition of aerobic oxidation does not occur at chlorinated hydrocarbon concentrations less than 10 mg/liter. Thus, except for catastrophic circumstances, environmental concentrations of 1,2-dichloroethane would appear to pose no threat to the normal operation of municipal sewage treatment plants.

5.4 ENVIRONMENTAL TRANSPORT

Because the vapor pressure of 1,2-dichloroethane is moderately high, most emissions from manufacturing operations occur as vapors that are

vented directly to the atmosphere. Even when initially present in wastewater or solid waste products, 1,2-dichloroethane tends to transfer rapidly to the atmosphere (Sect. 5.1.4). This volatility, coupled with a moderately long atmospheric half-life (Sect. 5.1.4), results in aerial transport playing the principal role in the distribution of 1,2-dichloroethane in the environment (McConnell, Ferguson, and Pearson, 1975; Pearson and McConnell, 1975). Some transfer of 1,2-dichloroethane from air to water also occurs, particularly as a result of rainfall. This effect is considered minor as compared to aerial transport, but quantitative data comparing these transport routes are lacking.

6. BIOLOGICAL ASPECTS IN HUMANS

6.1 METABOLISM

6.1.1 Uptake and Absorption

Inhalation is the principal route of exposure to 1,2-dichloroethane. Uptake occurs primarily through inhalation of air at work sites where this compound is manufactured or used. Ingestion of 1,2-dichloroethane is relatively uncommon and is chiefly the result of mistaken indentity or attempts at suicide (Menschick, 1971). Once inhaled or ingested, however, 1,2-dichloroethane is readily absorbed in the lung or gastro-intestinal tract. Uptake by skin absorption also occurs, but large doses are required to cause serious systemic poisoning (Irish, 1963).

6.1.2 Transport, Distribution, Transformation, and Elimination

No systematic studies of the metabolism of 1,2-dichloroethane by humans have been published, and only a few pertinent observations exist. Bryzhin (1945, as cited in National Institute for Occupational Safety and Health, 1976) found no trace of 1,2-dichloroethane in the internal organs of four persons who died after drinking 150 to 200 ml of the liquid, but he did detect the presence of an organic chloride. He concluded that 1,2-dichloroethane underwent rapid transformation after ingestion. This conclusion is consistent with results obtained later from an extensive study of the metabolism of 1,2-dichloroethane in mice (Yllner, 1971). In the latter work, evidence was obtained that the metabolism of 1,2-dichloroethane in mice proceeded through the formation of 2-chloroethanol and chloroacetic acid. This route now appears to be generally accepted as typical for mammals, including humans (Heppel and Porterfield, 1948; McCann, Simmon, Streitwieser, and Ames, 1975; Yllner, 1971), but this assumption awaits experimental confirmation.

In 1953, Urosov (as cited in National Institute for Occupational Safety and Health, 1976) reported that 1,2-dichloroethane occurred in the milk of nursing mothers occupationally exposed by inhalation and

skin absorption. The concentration of the chlorinated hydrocarbon reached a maximum about 1 hr after the women left work and then declined. In related experiments, Urosov measured the concentrations of 1,2-dichloroethane in the breath and milk of women exposed to approximately 15.5 ppm for an unspecified length of time. Initially, concentrations were 14.5 ppm (breath) and 0.58 mg per 100 ml (milk); however, 18 hr after exposure, these values declined to about 3 ppm and 0.20 to 0.63 mg per 100 ml respectively.

No detailed studies have been made of the excretion of 1,2-dichloroethane by humans. In observations of Polish agricultural workers who were exposed to large quantities of the liquid by inhalation and absorption, Brzozowski et al. (1954, as cited in National Institute for Occupational Safety and Health, 1976) indicated that rapid urinary elimination of 1,2-dichloroethane occurred; however, the amounts excreted were not indicated (Sect. 6.2.1.4).

6.2 EFFECTS

6.2.1 Toxicity

1,2-Dichloroethane is toxic to humans when it is ingested, inhaled, or absorbed through skin or mucous membrane (Sax, 1974). The primary effects of acute or chronic exposure to 1,2-dichloroethane are central nervous system depression, gastrointestinal upset, and injury to the liver, kidneys, lungs, and adrenals (Irish, 1963).

6.2.1.1 Acute — Oral ingestion of 1 or 2 oz, about 400 to 800 mg/kg body weight, of 1,2-dichloroethane by an adult male is fatal (Fairchild, 1977). Clinical symptoms of acute 1,2-dichloroethane poisoning by ingestion usually appear within 2 hr after exposure. Typically, they include headache, dizziness, general weakness, nausea, vomiting of blood and bile, dilated pupils, heart pains and constriction, pain in the epigastric region, diarrhea, and unconsciousness. Pulmonary edema and increasing cyanosis are often observed. If exposure is sufficiently brief, these symptoms may disappear when the individual is no longer exposed (Borisova, 1960; McNally and Fostvedt, 1941; Wirtschafter and Schwartz, 1939). However, persistent effects occur with sufficient exposure (Sect. 6.2.1.3).

Autopsies frequently reveal hyperemia and hemorrhagic lesions of vital organs, especially the stomach, intestines, heart, brain, liver, and kidney. Not all instances of 1,2-dichloroethane ingestion are fatal, but death has resulted in the majority of reported cases. Most often these deaths were attributed to circulatory and respiratory failure (Budanova, 1965; Luzhnikov et al., 1976; National Institute for Occupational Safety and Health, 1976; Yodaiken and Babcock, 1973; Zhizhonkov, 1976).

Exposure to 4000 ppm of 1,2-dichloroethane vapor for 1 hr produces serious illness in humans (Association of the Pesticide Control Officials, Inc., 1966). However, two men exposed experimentally in 1930 to 1200 ppm of 1,2-dichloroethane for 2 min apparently suffered little discomfort, except that the odor of 1,2-dichloroethane was extremely noticeable (Sayers et al., 1930). The effects of acute exposure by inhalation are similar to those described for ingestion, but the primary target appears to be the central nervous system (Patterson et al., 1975). Neural depression increases with the amount of 1,2-dichloroethane absorbed (Stewart, 1967). Damage of the liver, kidneys, and lungs also occurs, and reports of leukocytosis and elevated serum bilirubin are common (National Institute for Occupational Safety and Health, 1976).

The absorption of 1,2-dichloroethane through skin produces effects similar to those reported for inhalation, but large doses are required to cause serious systemic poisoning. Brief contact of 1,2-dichloroethane with skin seldom causes serious difficulties; however, repeated or prolonged contact results in extraction of normal skin oils and can cause cracking or chapping (Duprat, Delsaut, and Gradski, 1976; Wirtschafter and Schwartz, 1939). Although pain, irritation, and lacrimation normally occur when 1,2-dichloroethane contacts eye tissue, significant damage usually occurs only if the compound is not promptly removed by washing (Irish, 1963).

6.2.1.2 Chronic — No instances of chronic ingestion of 1,2-dichloroethane were found, but a few reports of repeated exposures to low concentrations of 1,2-dichloroethane by inhalation or skin absorption have been published. Chronic exposures to 1,2-dichloroethane by inhalation or absorption usually result in progressive effects that closely resemble

the symptoms described for acute exposure, especially neurological changes, loss of appetite, gastrointestinal problems, irritation of the mucous membranes, and liver and kidney impairment. The concentrations and exposure times associated with the onset of chronic symptoms in humans are difficult to deduce from existing literature. In general, 8-hr exposures of 10 to 100 ppm for durations of a few weeks to a few months appear to be characteristic of most cases. Fatalities may occur following such exposures, but they are more frequently associated with acute rather than chronic poisonings (Irish, 1963; National Institute for Occupational Safety and Health, 1976).

Odor is not a dependable guide for avoiding dangerous chronic exposures to 1,2-dichloroethane. Although some individuals can detect as little as 3 ppm under laboratory conditions (Sect. 6.2.3), others consider it barely detectable at 50 or 100 ppm (Hoyle, 1961; Verschueren, 1977). The odor of 1,2-dichloroethane is generally considered unmistakable at 180 ppm, but even at this concentration it may not be considered unpleasant. In addition, it is easy to become adapted to odor at low concentrations (Irish, 1963).

6.2.1.3 Poisoning Incidents and Case Histories — More than 100 case histories of fatal and nonfatal 1,2-dichloroethane poisonings have been reported in some detail in the literature (National Institute for Occupational Safety and Health, 1976). In almost all cases involving ingestion of 1,2-dichloroethane (approximately 30), death resulted. The amounts of 1,2-dichloroethane consumed by the victims varied from "one sip" to 100 ml or more. Ages varied from 1.5 years to about 80. Signs and symptoms were similar to those listed in Sect. 6.2.1.1, with violent vomiting, nausea, collapse, and unconsciousness mentioned most frequently. Death usually occurred within two days of exposure, but in a few instances it was delayed up to six days.

More than 70 cases of acute inhalation exposures to 1,2-dichloroethane are described in the literature (National Institute for Occupational Safety and Health, 1976); only a small fraction of these, about 13%, resulted in fatalities. In general, acute inhalation exposures have been work related and associated with the use of end products containing 1,2-dichloroethane. Most fatalities have been adult males. Symptoms and

signs associated with acute inhalation exposures are generally similar to those previously described. In lethal exposures by inhalation, death does not occur as rapidly as in lethal exposures by ingestion. However, most victims succumb within two weeks.

Among recorded case histories, most victims of acute inhalation poisoning recovered and were released as clinically normal a few days after exposure. Only a few follow-up case studies have been made to determine if long-term effects develop from acute inhalation exposure to 1,2-dichloroethane. In a few poorly documented instances, chronic changes in the central nervous system appear to have persisted 1 to 18 years following exposure (Smirnova and Granik, 1970, as cited in National Institute for Occupational Safety and Health, 1976). In the most serious case, illness was accompanied by encephalitis and special injury to the subcortical region that improved only slowly during 14 years. It is uncertain, however, that exposures were only to 1,2-dichloroethane. Further studies of delayed effects of acute inhalation exposures to 1,2-dichloroethane are needed.

6.2.1.4 Epidemiology — Several epidemiological studies of the effects of 1,2-dichloroethane have been made. Di Porto and Padellaro (1959) reported on 48 cases of poisoning in Italy by a fumigant containing three parts 1,2-dichloroethane and one part carbon tetrachloride. The effects were mild for 28, moderate to severe for 16, and fatal for 4 persons. The clinical findings were similar to those described in Sect. 6.2.1.1. The extent to which carbon tetrachloride influenced these findings is unknown.

In the same year, Cetnarowicz (1959) published a study of Polish workers employed by an oil refinery that used a 4:1 mixture of 1,2-dichloroethane and benzene as a processing fluid. After a two- to eight-month exposure to 10 to 200 ppm 1,2-dichloroethane in the work site air, 16 workers on one shift experienced a general reduction in body weight of 2 to 10 kg; 4 had tender, slightly enlarged livers, 7 had tenderness of the epigastrium, and most had elevated urobilinogen levels in the urine. Thirteen of the workers had normal levels of erythrocytes and hemoglobin, but only 9 showed a normal distribution of white blood cells. Other workers had abnormal levels of serum bilirubin, albumin, globulin, fibrin,

and blood nonprotein nitrogen. In general, about half of the workers had some loss of liver function, and nearly one-third experienced changes in the gastrointestinal tract, sinus bradycardia, or hematopoietic system. It should be noted, however, that some of the reported blood changes could reflect benzene poisoning rather than 1,2-dichloroethane poisoning.

Khubutiya (1964) studied hematologic changes in an unspecified number of 1,2-dichloroethane workers. Blood cell morphology, color index, red blood cell count, and hemoglobin content were recorded. Samples from about one-third of the workers contained hyperchromic erythrocytes without megaloblasts. Nearly half of the blood samples showed moderate to high sedimentation rates induced by an increase in blood globulin. Leukopenia with relative and absolute neutrophilia and absolute lymphopenia was noted. Moderate or marked monocytosis was frequently observed. Türk's cells occurred in the peripheral blood of one worker in five. Khubutiya attributed both the monocytoses and the Türk's cells to stimulation of the reticuloendothelial system by long, unspecified exposures to 1,2-dichloroethane.

Brzozowski et al. (1954, as cited in National Institute for Occupational Safety and Health, 1976) reviewed the health status and work practices of Polish agricultural workers who used 1,2-dichloroethane as an insecticide. The liquid was brought to the field in barrels and was then poured by hand into open buckets which the workers emptied into a series of holes. Skin absorption, which resulted from spillage on clothes and shoes, was probably as significant a contribution to exposure as inhalation. Air concentrations of 1,2-dichloroethane were estimated at 15 to 60 ppm. Signs and symptoms of exposure were reported in 90 of 118 workers; the most common were conjunctival congestion, weakness, reddening of the pharynx, bronchial symptoms, metallic taste in the mouth, headache, dermatographism, nausea, cough, liver pain, tachycardia, and dyspnea after effort.

No changes were found in the blood or functions of internal organs of 100 factory workers exposed to 1,2-dichloroethane for six months to five years at concentrations of 25 ppm or less (Rosenbaum, 1947, as cited in National Institute for Occupational Safety and Health, 1976). However, functional disturbances of the nervous system occurred in several workers,

including heightened lability of the autonomic nervous system, diffuse red dermatographism, muscular swelling, bradycardia, and increased sweating.

Kozik (1957, as cited in National Institute for Occupational Safety and Health, 1976) studied the health of Russian aircraft workers chronically exposed to 1,2-dichloroethane during the manufacture of soft rubber tanks. Concentrations of 1,2-dichloroethane varied from 5 to 40 ppm and persisted for 70% to 75% of the working time. Total morbidity, acute gastrointestinal disorders, neuritis, radiculitis, and other diseases were generally more pronounced among workers exposed to 1,2-dichloroethane than among other workers in the factory. Among 83 exposed workers, 19 were found to have diseases of the liver and bile ducts, 13 had neurotic conditions, 11 experienced autonomic dystonia, 10 had goiter or hyperthyroidism, and 5 reported asthenic conditions. Other details concerning most of these epidemiological studies may be found in the NIOSH criteria document for 1,2-dichloroethane (National Institute for Occupational Safety and Health, 1976).

6.2.2 Carcinogenicity, Mutagenicity, and Teratogenicity

There are no published studies of mutagenic, teratogenic, or carcinogenic effects of 1,2-dichloroethane on humans, but based on recent animal studies the National Institute for Occupational Safety and Health recommends that 1,2-dichloroethane be handled in the work place as if it were a human carcinogen (National Institute for Occupational Safety and Health, 1978). Experimental animal data are discussed in Sect. 7.

6.2.3 Other

Only a few studies have been made to determine other physiological effects of 1,2-dichloroethane on humans. Borisova (1960) measured the odor threshold for 1,2-dichloroethane as well as the influence of this compound on light sensitivity of the eye, pulse fluctuations, and changes in blood volume in limbs. In 1256 tests on 20 subjects to determine the odor threshold, 1 individual detected as little as 3 ppm, 6 persons

noticed 4.5 ppm, and the others in the group were first aware of the compound at a concentration of 6 ppm. When 3 persons were exposed by inhalation to a concentration of 1 ppm, no change occurred in the light sensitivity of their eyes; however, as the concentration was increased to 12.5 ppm, the threshold of perception decreased. Similarly, when 4 subjects inhaled 1.5 ppm 1,2-dichloroethane for 30 sec, temporary vasoconstriction occurred in the fingers of all subjects. As the concentrations were increased to 3, 6, and 12.5 ppm, and the exposure time to 15 min, the degree of response increased with exposure. Borisova also measured changes in the respiration of subjects exposed to concentrations of 1, 1.5, 3, 6, and 12.5 ppm for 1 min. Spirograms obtained by introducing a tube into the nostril of each subject indicated that concentrations of 1,2-dichloroethane greater than 1 ppm produced increased depth of breathing.

7. BIOLOGICAL ASPECTS IN NONHUMAN MAMMALS

7.1 METABOLISM

7.1.1 Uptake and Absorption

1,2-Dichloroethane is readily absorbed by the lungs and gastrointestinal tract of nonhuman mammals. As with humans, absorption through the skin also occurs, but at such a low rate that this route of uptake is relatively unimportant compared with inhalation or ingestion (Irish, 1963). The percutaneous absorption rate through mouse skin is 479.3 ± 38.3 nanomoles min^{-1} cm^{-2} of skin (Tsuruta, 1975).

7.1.2 Distribution, Transformation, and Elimination

Mammalian metabolism of 1,2-dichloroethane is not well understood. Based on the chemical properties of the molecule, 1,2-dichloroethane may be expected to interact with the principal fatty tissues of mammals. However, there are no highly obvious target organs, and little information on tissue distribution is available.

Perhaps the most extensive of the few existing studies is the work of Yllner (1971), who injected female albino mice intraperitoneally (0.05 to 0.17 g/kg) with 10% olive oil solutions of ^{14}C-labeled 1,2-dichloroethane (3.6 μCi/mg) and followed the elimination of radioactivity for three days. The turnover was rapid; more than 90% of the activity was excreted within 24 hr of injection. Depending on the dose, 10% to 42% of the compound was expired unchanged and 12% to 15% as carbon dioxide. From 51% to 73% of the dose was excreted in the urine, 0% to 0.6% was excreted in the feces, and 0.6% to 13% remained in the animals. The urine contained three major metabolites in proportions that also occurred when ^{14}C-labeled chloroacetic acid was administered: chloroacetic acid (6% to 23%), *S*-carboxymethylcysteine (44% to 46%, free; 0.5% to 5%, conjugated), and thiodiacetic acid (33% to 34%). Accordingly, the author concluded that metabolism of 1,2-dichloroethane in the mouse proceeds mainly through a dehalogenation step that yields chloroacetic acid.

An enzyme capable of dehalogenating 1,2-dichloroethane or similar chlorocarbons was identified in rat liver extract by Heppel and Porterfield (1948) and by Van Dyke and Wineman (1971). However, Bray et al. (1952) were unable to confirm enzymatic decomposition of 1,2-dichloroethane in rabbit liver extracts and suggested that dechlorination of 1,2-dichloroethane occurred nonenzymatically through abstraction of chlorine atoms by compounds containing sulfhydryl groups. Morrison and Munro (1965) showed that such reactions occur in vitro with cysteine to form the thioether, *S*,*S*′-ethylene-bis-cysteine. The tendency of 1,2-dichloroethane to injure kidney tubules and cause pulmonary edema suggests that the chlorinated compound is indeed capable of reacting with sulfhydryl groups in vivo (Winteringham and Barnes, 1955).

Inhaled 1,2-dichloroethane is transported into the uterus and ovaries of nonpregnant rats. During pregnancy it passes through the placental barrier of rats and is accumulated in fetal tissues, especially the liver (Vozovaya and Malyarova, 1975).

The accumulation of 1,2-dichloroethane in the milk of cows fed with fumigated grain was studied by Sykes and Klein (1957). These researchers administered the 1,2-dichloroethane as a corn oil solution in sealed gelatin capsules. Two cows received the equivalent of 100 ppm in 7 kg of grain concentrate daily. Two other cows were fed the equivalent of 500 ppm for the first 10 days, then 1000 ppm for an additional 12 days. A fifth cow served as a control. Seven milk samples were analyzed between the 3d and 22d days of the experiment. The concentration of 1,2-dichloroethane in the control sample varied from 0.0 to 0.10 ppm, with a mean of 0.06 ppm. The milk of cows receiving 100 ppm daily varied from 0.10 to 0.29 ppm, reaching a peak on the 5th day, then declining to the minimum. The milk of cows receiving the higher dose of 1,2-dichloroethane varied from 0.18 to 0.45 ppm. The highest concentration was reached on the 9th day, after which a slow decline was observed. No reduction in appetite or milk production occurred during the experiment. Sykes and Klein (1957) also considered the possibility that 1,2-dichloroethane is metabolized by cows to a nonvolatile organic chloride, but they were unable to verify the presence of chloride in milk from a cow fed 1000 ppm 1,2-dichloroethane for 12 days.

In other studies, Johnson (1965, 1966, 1967) observed that within 2 hr a single oral dose of 1,2-dichloroethane (4 millimoles/kg) reduced the level of liver glutathione in rats 31% to 84% of that in controls. 2-Chloroethanol (0.67 millimole/kg) similarly lowered glutathione levels to 17% of control values with formation of *S*-carboxymethylglutathione. Reduction of liver glutathione may have serious toxicological consequences because the liver is more susceptible to injury in the absence of this compound (Hayes, 1975). Johnson also observed rapid in vitro conjugation of chloroacetaldehyde, a metabolite of 2-chloroethanol, with the reduced form of glutathione in a nonenzymatic reaction at pH 7 and concluded that this was probably the principal in vivo reaction in mammals. However, based on Yllner's later experiments, it appears likely that in vivo dehydrogenation of 2-chloroethanol in mammals proceeds through chloroacetaldehyde to chloroacetate before conjugation with glutathione occurs (Yllner, 1971).

Bondi and Alumot (1966, as cited in National Institute for Occupational Safety and Health, 1976) also studied the reaction between 1,2-dichloroethane and glutathione. Using enzymes present in the soluble supernatant from rat liver, they obtained small amounts of *S*-(β-hydroxyethyl)glutathione and *S*,*S*′-ethylene-bis-glutathione. However, in a subsequent quantitative study, Yllner (1971) showed that these compounds were only minor components of metabolic products in mice.

7.2 EFFECTS

7.2.1 Toxicity

The primary toxic effects of 1,2-dichloroethane on nonhuman mammals are similar for acute, subacute, and chronic exposures. They consist mainly of central nervous system depression and hemorrhagenic or hyperemic lesions of the liver, kidneys, lungs, and adrenals. Injuries chiefly reflect the powerful narcotic and solvent properties of 1,2-dichloroethane and are usually dose related. Rapid death in deep narcosis often follows acute exposure by inhalation or ingestion. Deaths occurring a few hours

after recovery from narcosis are usually the result of shock or cardiovascular collapse; deaths delayed by several days most often result from renal damage (Irish, 1963; Spencer et al., 1951). Despite these qualitative statements, the manner in which 1,2-dichloroethane exerts its lethal effects in mammals cannot always be easily identified or characterized. For example, Heppel et al. (1946) stated, "In spite of the fact that this important compound has been extensively studied in this laboratory for nearly three years, it must be admitted that the exact mechanism of death remains obscure."

Weakness, vertigo, persistent thirst, eye and nasal irritation, static and motor ataxia, retching movements, and marked changes in respiration are common signs of acute 1,2-dichloroethane poisoning in nonhuman mammals. Sayers et al. (1930) observed all of these signs in guinea pigs after less than 10 min exposure to 60,000 ppm 1,2-dichloroethane and in 25 min at 10,000 ppm (Table 21). However, no signs of poisoning were apparent following exposure at 1200 ppm for 8 hr. Death occurred in less than 30 min with animals exposed to 60,000 ppm and usually after about a

Table 21. Correlation of symptoms, exposure time, and concentration for guinea pigs inhaling 1,2-dichloroethane

Symptom	Average period necessary to produce symptom at various concentrations (min)				
	2000 ppm	4000-4500 ppm	10,000-17,000 ppm	25,000-35,000 ppm	60,000-70,000 ppm
Nose and eye irritation	6[a]	3-10	1-2	1-2	1
Unsteadiness	20-45	8-18	2-3	1-2	1-2
Inability to walk	*a*	30	4-10	3-5	2-4
Retching	*a*	*b*	7-15	5-13	2-4
Jerky, rapid respiration	*a*	*b*	10-30	5-13	4-8
Unconsciousness	*a*	30-60	10-20	4-7	3-7

[a]This symptom was not observed even after 480 min of exposure.
[b]This symptom was not observed even after 360 min of exposure.

Source: Adapted from Sayers et al., 1930, Table 1, p. 232.

day following a 25-min exposure to 10,000 ppm. Congestion and edema of the lungs and generalized passive congestion throughout the visceral organs were common characteristics of animals that died during exposure. Renal hyperemia and pulmonary congestion and edema were typical conditions in animals that died one to eight days following exposure. Similar characteristics, as well as fatty degeneration of the myocardium and renal tubular epithelium, were also reported by other observers who exposed mice, rats, guinea pigs, rabbits, cats, and dogs sufficiently long to air containing 1000 to 3000 ppm 1,2-dichloroethane (Heppel et al., 1945; Heppel et al., 1946; Spencer et al., 1951).

The acute toxicity of 1,2-dichloroethane varies with species, route, and dose. In general, it appears to be more toxic to mammals than is carbon tetrachloride (Hofmann, Birnstiel, and Jobst, 1971). Table 22 summarizes mortality in seven species of animals due to a single acute exposure by inhalation that varied from 1.5 to 7 hr. Few animals survived exposure at 3000 or 1500 ppm for 7 hr, but death was frequently delayed

Table 22. Mortality after single acute exposure to 1,2-dichloroethane by inhalation

Animal	Number	Weight (g)	Time (hr)	Mortality ratio	Cumulative mortality				
					0	1st day	2nd day	3rd day	4th day
			Exposure to 3000 ppm						
Mice	22		7	22/22	22				
	19		2	19/19	0	19			
Rats	20	146	7	20/20	0	19	20		
	16	177	3½	15/16	0	1	3	5	13
	15	257	1½	0/15					
Guinea pigs	14	885	7	14/14	0	11	13	14	
Rabbits	16	3,940	7	12/16	0	7	11	12	
Raccoons	2		7	0/2					
Cats	3	3,240	7	0/3					
Hogs	2	27,300	7	2/2	0	0	2		
			Exposure to 1500 ppm						
Mice	20		7	20/20	4	20			
	23		2	1/23	0	0	0	1	
Rats	20	170	7	4/20	0	2	2	4	
	13	257	4	0/13					
Guinea pigs	12	321	7	6/12	0	1	4	5	6

Source: Adapted from Heppel et al., 1945, Table 1, p. 55. Reprinted by permission of the publisher.

for days in some species. Congestion of the viscera and degeneration of the liver and kidneys were common findings among these animals (Heppel et al., 1945).

The most recent data published by the National Institute for Occupational Safety and Health (1978) indicate that, for exposure by inhalation, the lowest doses that are lethal for a variety of common mammalian species range from about 1000 ppm for 4 hr to about 3000 ppm for 7 hr. In contrast, a dose of 175 mg/kg administered intravenously is lethal in the dog (Fairchild, 1977). Other minimum lethal doses are indicated in Table 23.

The effects of acute exposure to 1,2-dichloroethane are strongly dependent on the concentration of the toxicant. For example, when rats were exposed to air containing 1000 ppm 1,2-dichloroethane, 7.20 hr elapsed before half the population died; however, with concentrations of

Table 23. Lethal doses of 1,2-dichloroethane to nonhuman mammals

Species	Category[a]	Dosage	Route
Mouse	LCLo	5000 mg/m^3	Inhalation
	LDLo	600 mg/kg	Oral
	LDLo	380 mg/kg	Subcutaneous
	LDLo	250 mg/kg	Intraperitoneal
Rat	LDLo	1000 ppm/4 hr	Inhalation
	LDLo	500 mg/kg	Subcutaneous
	LD_{50}	680 mg/kg	Oral
Guinea pig	LCLo	1500 ppm/7 hr	Inhalation
	LDLo	600 mg/kg	Intraperitoneal
Rabbit	LCLo	3000 ppm/7 hr	Inhalation
	LDLo	1200 mg/kg	Subcutaneous
	LD_{50}	860 mg/kg	Oral
Dog	LDLo	2000 mg/kg	Oral
	LDLo	175 mg/kg	Intravenous
Pig	LCLo	3000 ppm/7 hr	Inhalation

[a]LCLo — lowest published lethal concentration in air; LDLo — lowest reported lethal dose by any route other than inhalation; LD_{50} — median lethal dose by any route other than inhalation.

Source: Adapted from Fairchild, 1977, p. 388.

3000 and 12,000 ppm, the median lethal response times decreased to 2.75 and 0.53 hr respectively (Spencer et al., 1951). Similarly, when male guinea pigs were injected intraperitoneally with 150 or 300 mg/kg 1,2-dichloroethane in corn oil, no noticeable hepatotoxic effects occurred; when 600 mg/kg was injected, a low order of damage occurred, as measured by increased serum concentrations of ornithine carbamyl transferase (Divincenzo and Krasavage, 1974). 1,2-Dichloroethane also exhibits concentration-dependent nephrotoxic characteristics when it is injected intraperitoneally into male Swiss mice. Plaa and Larson (1965) observed a progressive increase in the fraction of mice (10%, 30%, and 56%) having excessive urinary protein, but not excessive urinary glucose, following injection of 0.075, 0.2, and 0.4 ml of 1,2-dichloroethane per kilogram of body weight. It should be noted, however, that the last cited dose is well above the minimum lethal dose for mice.

Duprat, Delsaut, and Gradski (1976) studied the irritant power of 1,2-dichloroethane and other simple chlorinated hydrocarbons by making a single application or instillation of the solvents to the skin or eye of rabbits and then following the course of the resulting lesions macroscopically and histologically. 1,2-Dichloroethane was rated a primary irritant in both applications but was considered less potent as a skin irritant than perchloroethylene, chloroform, 1,1,2-trichloroethane, trichloroethylene, and methylene chloride. As an eye irritant 1,2-dichloroethane was classified less potent than chloroform, methylene chloride, dichloroethylene, trichloroethylene, and trichloroethane.

Although acute exposures to 1,2-dichloroethane produce more or less similar responses in many mammalian species, the systemic administration of this compound to dogs produces one effect not ordinarily seen in other mammalian species: clouding of the cornea. Typically, there is a necrosis of the endothelium beginning in the basal portions of the cells, followed by secondary swelling of the stroma, formation of excess basement membrane, and thickening of Descemet's layer. This response also occurs in cats and rabbits when 1,2-dichloroethane is injected directly into the anterior chamber of the eye but not with systemic administration of the compound. The unique response of the dog eye appears to result from a greater amount of 1,2-dichloroethane coming in

contact with the dog endothelium rather than from any unusual susceptibility of the eye itself (Heppel et al., 1944; Kuwabara, Quevedo, and Cogan, 1968).

Chronic exposures of rats and guinea pigs to air containing 100 ppm 1,2-dichloroethane for 7 hr per day, five days per week for several months generally produced no deaths and no evidence of adverse effects as judged by general appearance, behavior, mortality, growth, organ function, or blood chemistry (Heppel et al., 1946; Hofmann, Birnsteil, and Jobst, 1971; Spencer et al., 1951). However, similar exposures of rats, guinea pigs, rabbits, and monkeys to air containing 400 or 500 ppm 1,2-dichloroethane usually resulted in high mortality and a limited number of varying pathological findings, including pulmonary congestion; diffuse myocarditis; slight to moderate fatty degeneration of the liver, kidney, and heart; and increased plasma prothrombin time (Heppel et al., 1946; Hofmann, Birnsteil, and Jobst, 1971; Spencer et al., 1951). Different effects were observed in rabbits chronically exposed to high concentrations of 1,2-dichloroethane for brief intervals. After inhaling 3000 ppm 1,2-dichloroethane for 2 hr per day, five days per week for 90 days, rabbits exhibited varying degrees of anemia accompanied by leukopenia and thromobocytopenia. In addition, there was frequent hypoplasia of granuloblastic and erythroblastic parenchyma in the bone marrow. The cellular concentration of leukolipids was also reduced, but no change occurred in polysaccharides, peroxidase, or ribonucleic acid. In view of these findings, the authors suggested that 1,2-dichloroethane might exert a direct poisoning effect on bone marrow (Lioia and Elmino, 1959; Lioia, Elmino, and Rossi, 1959).

Other chronic effects of 1,2-dichloroethane have also been observed. In a series of studies, Vozovaya (1971, 1974, 1975, 1976) exposed female white rats to air containing 57 mg/m^3 (14 ppm) 1,2-dichloroethane for 4 hr per day, six days per week for six to nine months to determine the effect of this compound on generative function of these animals and on the development of progeny. Fertility of the treated rats decreased, and the number of stillbirths increased relative to controls. Viability of first generation offspring decreased. First generation females exhibited prolonged estrus and a high perinatal mortality rate. These effects were

augmented and new difficulties were introduced when rats were exposed in similar experiments to mixtures of 1,2-dichloroethane (30 ± 10 mg/m^3) and gasoline (1210 ± 70 mg/m^3). In particular, a decrease in the incidence of conception occurred which was not seen during similar exposures to the separate compounds. In addition, there was a significant decrease in the viability of first generation offspring. For example, at the end of the sixth month, mortality in the group exposed to 1,2-dichloroethane alone was 25.0 ± 6.92% as compared with 5.4 ± 3.75% in the controls ($P < 0.05$); however, for the group exposed to the combination of 1,2-dichloroethane and gasoline, mortality ($P < 0.05$) was 28.0 ± 9.16% (Vozovaya, 1975). In a later study in which 108 random-bred female white rats were exposed to gasoline (31.0 ± 33 mg/m^3) and 1,2-dichloroethane (15 ± 3 mg/m^3) separately and in combination 4 hr per day, six days per week for four months, Vozovaya (1976) found increased numbers of degenerative follicles in the microstructure of ovaries of rats exposed to the mixture of compounds but not in ovaries of rats exposed to the separate compounds. In the affected rats, a high total embryonic mortality was caused by a high rate of preimplantation deaths and also by a high rate of resorptions of embryos at an early stage of development.

In other studies, Alumot, Nachtomi, Mandel, Holstein, Bondi, and Herzberg (1976) added 250 or 500 ppm 1,2-dichloroethane to the food of rats for two years. No significant differences were found between these animals and controls with respect to growth, feed consumption, or feed efficiency. At the levels tested, the added 1,2-dichloroethane had no effect on male fertility or reproductive activity of rats of either sex. Based on the results of this study, the authors recommended an acceptable daily intake and tolerance of 1,2-dichloroethane in human food of 0.07 mg/kg of body weight and 10 ppm respectively.

Malinskaya and Yanovskaya (1957) studied the effect of 1,2-dichloroethane on the metabolism of vitamin C in rats. After exposing rats to air containing 20 mg/liter for 2 hr, they sacrificed the animals and determined ascorbic acid concentrations in the liver, spleen, brain, kidneys, adrenals, heart, and walls of the small intestine. Significant increases of ascorbic acid occurred in the liver (80%), spleen (36%), and brain (15%) but not in the adrenals. In rats exposed for 25 2-hr

periods a month to air containing 0.3 mg of 1,2-dichloroethane per liter, the ascorbic acid level in all organs was normal. However, the ascorbic acid levels in the liver and brain of rats similarly exposed to 0.6 mg of 1,2-dichloroethane per liter were very much higher than in controls. The authors stated that the large increase in ascorbic acid in the organs of rats exposed to high concentrations of 1,2-dichloroethane was due to a rise in the rate of synthesis of the vitamin. They postulated that the increased synthesis was a compensatory process that participated in the defensive reaction of the organism to toxic factors. Malinskaya and Yanovskaya then concluded that inhalation of 1,2-dichloroethane considerably raises the bodily requirements for vitamin C.

7.2.2 Carcinogenicity

Because of its structure 1,2-dichloroethane has been classified as a substance having limited suspicion of carcinogenicity (U.S. Environmental Protection Agency, 1977); however, few studies have addressed the carcinogenic potential of this compound. Two such studies were reported in 1951 and 1977, two were completed in 1978, and two others are currently nearing completion.

In an early inhalation study that lasted 212 days, Spencer et al. (1951) found no evidence of carcinogenic activity when Wistar rats were exposed 151 times to 200 ppm 1,2-dichloroethane for 7 hr per day. More recently, in an inhalation study still in progress at the Montedison Research Institute in Bologna, Maltoni (as cited in Albert, 1978) separately exposed 90 male and 90 female Swiss mice and Sprague-Dawley rats 7 hr daily, five times weekly, to 0, 5, 10, 50, and 150 ppm 1,2-dichloroethane. Initially, the highest exposure was 250 ppm, but this was reduced after ten weeks to 150 ppm because the animals could not tolerate the higher concentration. After exposures of two year's duration, surviving animals will be held until the end of their natural lives. In an interim report after 78 weeks of exposure and 26 weeks of observation, Maltoni indicated that he "has found no evidence of any exceptional tumors in rats or mice" (Albert, 1978). This conclusion was qualified as "almost conclusive."

In 1977 Theiss et al. investigated the carcinogenic potential of 1,2-dichloroethane and other organic contaminants of U.S. drinking water by injecting the compounds intraperitoneally into six- to eight-week-old strain A/St male mice. Each dose of reagent grade 1,2-dichloroethane was injected into groups of 20 mice three times a week for 24 injections. Three dose levels were used: 20, 40, and 100 mg/kg in each injection; 100 mg/kg was the maximum tolerated dose. Tricaprylin was used as the vehicle. Twenty-four weeks after the first injection the mice were sacrificed, and their lungs were placed in Tellyesniczky's fluid. After 48 hr the lungs were examined microscopically for surface adenomas, and the frequency of lung tumors in each group was compared with that in a vehicle-treated control group by means of the Student's t test. The incidence of lung tumor increased with dose, but none of the groups had pulmonary adenoma responses that were significantly greater ($P < 0.05$) than that of the vehicle-treated control mice.

Two studies of the carcinogenicity of 1,2-dichloroethane were performed for the National Cancer Institute (NCI) by the Hazleton Laboratories, Inc., Vienna, Virginia. The results of both studies were released by NCI on September 26, 1978. In one of these studies, 200 8-week-old Osborne-Mendel rats were exposed to technical grade 1,2-dichloroethane delivered by oral intubation. Fifty rats of each sex separately received either the maximum tolerated dose (95 mg/kg daily, time-weighted average dosage over a 78-week period) or one-half of this dose. Twenty rats of each sex served as untreated controls, and an equal number were given the vehicle (corn oil) by intubation. Survival of male rats exposed to the high dose was low; 50% (25/50) were alive by week 55, but only 16% (8/50) lived to week 75. None survived the study. Male rats in other groups fared better: in the low dose group 52% (26/50) survived at least 82 weeks, and in the untreated control group 50% (10/20) survived at least 87 weeks. The survival rate of female rats exposed to the high dose was 50% (25/50) by week 57 and 20% (10/50) by week 75. Half (25/50) of the female rats in the low-dose group survived at least 85 weeks. Terminal survival times for all groups are shown in Table 24.

Gross necropsies were performed on animals that died during the experiment or were killed at the end. Twenty-eight organs, as well as

Table 24. Terminal survival of rats in experimental and control groups involved in carcinogenicity studies with 1,2-dichloroethane

Group	Males		Females	
	Weeks in study	Animals alive at end of study	Weeks in study	Animals alive at end of study
Untreated controls[a]	106	4/20 (20%)	106	13/20 (65%)
Vehicle controls	110	4/20 (20%)	110	8/20 (40%)
Low-dose group	110	1/50 (2%)	101	1/50 (2%)
High-dose group[b]	101	0/50 (0%)	93	0/50 (0%)

[a]Five male and female rats were sacrificed at 75 weeks of study.
[b]All animals in this group died before the bioassay was terminated.

Source: Adapted from Albert, 1978, Table I, p. 15.

all tissues containing visible lesions, were fixed in 10% buffered formalin, embedded in paraplast, and sectioned for microscopic examination; H and E stain was normally used. Diagnoses of any tumors and other lesions were coded according to the Systematized Nomenclature of Pathology of the College of American Pathologists, 1965. Squamous-cell carcinomas of the forestomach occurred in 18% of the high-dose males and in 6% of the low-dose males but were not found in the controls. The Cochran-Armitage test included a significant positive association between dosage and the incidence of squamous-cell carcinomas in these animals. The Fisher exact test also confirmed the significance of these results ($P = 0.001$) when comparison was made between the high-dose group and the pooled vehicle control group. Only one squamous-cell carcinoma of the forestomach occurred in the exposed female rats and none were found in the controls (Table 25).

Hemangiosarcomas also occurred in exposed male and female rats but not in the control animals (Table 26). They were seen in the spleen, liver, adrenals, pancreas, large intestine, and abdominal cavity. Low-dose animals had higher incidences of hemangiosarcoma than high-dose animals. The Cochran-Armitage test indicated a significant ($P = 0.021$) positive association between dosage and the incidence of circulatory system hemangiosarcoma in males, but not females, when dosed groups were

Table 25. Squamous-cell carcinomas of the forestomach in 1,2-dichloroethane-treated rats

Group	Rats with squamous-cell carcinoma of forestomach
Male	
Untreated controls	0/20 (0%)
Vehicle controls	0/20 (0%)
Low-dose group	3/50 (6%)
High-dose group	9/50[a] (18%)
Female	
Untreated controls	0/20 (0%)
Vehicle controls	0/20 (0%)
Low-dose group	1/49 (2%)
High-dose group	0/50 (0%)

[a]A squamous-cell carcinoma of forestomach was metastasized in one male of high-dose group.

Source: Adapted from National Cancer Institute, 1978.

Table 26. Hemangiosarcomas in 1,2-dichloroethane-treated rats[a]

Males		Females	
Low-dose	High-dose[b]	Low-dose[c]	High-dose
11/50 (22%)	5/50 (10%)	5/50 (10%)	4/50 (8%)

[a]No hemangiosarcomas were found in male or female controls.

[b]Only 49 animals were examined for hemangiosarcomas of the spleen and adrenals and 48 for hemangiosarcomas of the pancreas.

[c]Only 48 animals were examined for hemangiosarcomas of the large intestine.

Source: Adapted from National Cancer Institute, 1978.

compared with the pooled vehicle control group. The Fisher exact test confirmed these findings with statistically significant probability values as follows: $P = 0.016$ for high-dose males versus pooled control and $P = 0.003$ for low-dose males versus pooled control.

In addition to the previous findings, the National Cancer Institute's rat study also showed significant increases in the incidence of mammary adenocarcinomas in treated female rats. In the high-dose group, tumors were noticed as early as 20 weeks after treatment. Eventually 36% (18/50) of this group developed lesions (Table 27). The Cochran-Armitage test indicated significant ($P = 0.001$) positive association between dosage and the incidence of mammary carcinomas when results were compared with either control group. The Fisher exact tests were significant when compared with the high-dose group and either the matched vehicle group ($P = 0.001$) or the pooled vehicle control group ($P = 0.002$). Historically, adenocarcinomas of the mammary gland occur in 2% (4/200) of the vehicle control females.

Table 27. Adenocarcinomas of the mammary gland in 1,2-dichloroethane-treated female rats

Untreated controls	Vehicle controls	1,2-Dichloroethane-treated rats	
		Low-dose	High-dose
2/20 (10%)	0/20 (0%)	1/50 (2%)	18/50 (36%)

Source: Adapted from National Cancer Institute, 1978.

In summary, the NCI study indicates a positive association between exposure to 1,2-dichloroethane and the incidence in male, but not female, rats of squamous-cell carcinomas of the forestomach and hemangiosarcomas of the circulatory system. The study also statistically links increased incidence of adenocarcinomas of the mammary gland in female rats with exposure to technical grade 1,2-dichloroethane.

The second NCI carcinogenic study of 1,2-dichloroethane used 200 5-week-old B6C3F1 mice instead of rats. Fifty male and female mice were administered technical grade 1,2-dichloroethane in maximum tolerated doses or in half of the maximum tolerated dose by oral intubation. For male mice this dose was 97 or 195 mg/kg daily, but for female mice it was 149 or 299 mg/kg daily (time-weighted average dose over a 78-week period). Twenty mice of each sex were used as untreated controls, and an equal number were given the vehicle (corn oil) by oral intubation. As in the previous NCI study, a gross necropsy was performed on each animal that died or was killed at the end, and similar histopathologic examinations were made. Mortality was high in the combined high-dose groups, with 72% (36/50) of all animals dying between weeks 60 and 80. However, for male mice there was no statistically significant association between dosage and terminal mortality: 42% of the animals exposed to the high dose were alive at the end of the study, but only 22% of the low-dose males survived. At the end of the study, 55% (11/20) of the vehicle control group and 35% (7/20) of the untreated control group remained. Except for the high-dose group, mortality of the female mice was appreciably lower than that for treated or untreated males (Table 28).

Hepatocellular carcinomas occurred in all male mice (Table 29), but only two were seen in females. The number of hepatocellular carcinomas

Table 28. Terminal survival of mice in experimental and control groups involved in carcinogenic studies with 1,2-dichloroethane

Group	Males		Females	
	Weeks in study	Animals alive at end of study	Weeks in study	Animals alive at end of study
Untreated controls	90	7/20 (35%)	90	16/20 (80%)
Vehicle controls	90	11/20 (55%)	90	16/20 (80%)
Low-dose group	90	11/50 (22%)	91	34/50 (68%)
High-dose group	91	21/50 (42%)	91	1/50 (2%)

Source: Adapted from National Cancer Institute, 1978.

Table 29. Hepatocellular carcinomas in 1,2-dichloroethane-treated mice

Group	Mice with hepatocellular carcinomas
Male	
Untreated controls	2/17 (12%)
Vehicle controls	1/19 (5%)
Low-dose group	6/47 (13%)
High-dose group	12/48 (25%)
Female	
Untreated controls	0/19 (0%)
Vehicle controls	1/20 (5%)
Low-dose group	0/50 (0%)
High-dose group	1/47 (2%)

Source: Adapted from National Cancer Institute, 1978.

in the high-dose male group were significantly greater than those in the control groups. The Cochran-Armitage test indicated a positive dose-response association with either the matched (P = 0.025) or the pooled (P = 0.006) controls. The Fisher exact test also yielded a significant (P = 0.009) comparison of the high-dose to the pooled control group.

A large number of alveolar/bronchiolar adenomas were also observed in the second NCI study. They were present in 31% of the male (15/48) and female (15/48) high-dose mice. None occurred in the untreated or vehicle control males, and only one appeared in each female control group (Table 30). The Cochran-Armitage test showed a significant (P = 0.005) positive dose-response association when either high-dose male or female groups were compared with appropriate untreated or vehicle control groups. The Fisher exact test also indicated that the high-dose groups had a significantly (P = 0.016) higher incidence rate than either of the control groups, but this test attributed no statistical significance to the incidence of alveolar/bronchiolar adenomas in the low-dose female mice.

Squamous-cell carcinomas of the forestomach occurred in ten of the mice treated with 1,2-dichloroethane and in two of the controls (Table 31).

Table 30. Alveolar/bronchiolar adenomas in mice treated with 1,2-dichloroethane

Group	Mice with alveolar/bronchiolar adenomas
Male	
Untreated controls	0/17 (0%)
Vehicle controls	0/19 (0%)
Low-dose group	1/47 (2%)
High-dose group	15/48 (31%)
Female	
Untreated controls	1/19 (5%)
Vehicle controls	1/20 (5%)
Low-dose group	7/50 (14%)
High-dose group	15/48 (31%)

Source: Adapted from National Cancer Institute, 1978.

Table 31. Squamous-cell carcinomas of the forestomach in 1,2-dichloroethane-treated mice

Group	Mice with squamous-cell carcinoma of forestomach
Male	
Untreated controls	0/17 (0%)
Vehicle controls	1/19 (5%)
Low-dose group	1/46 (2%)
High-dose group	2/46 (4%)
Female	
Untreated controls	0/19 (0%)
Vehicle controls	1/20 (5%)
Low-dose group	2/50 (4%)
High-dose group	5/48 (10%)

Source: Adapted from National Cancer Institute, 1978.

The Cochran-Armitage test indicated a significant (P = 0.035) positive association between dosage and the incidence of these lesions when dosed female groups were compared with the pooled vehicle control, but the Fisher exact tests did not confirm this association.

A statistically significant positive association between dosage and the incidence of mammary adenocarcinomas in female mice was also reported. These malignancies occurred in 18% (9/50) of the low-dose mice (P = 0.001, Cochran-Armitage test; P = 0.039, Fisher exact test) and 15% (7/48) of the high-dose mice (P = 0.003, Cochran-Armitage test). No adenocarcinomas of the mammary gland occurred in either the pooled vehicle control (0/60) or the matched vehicle control (0/20) (National Cancer Institute, 1978).

To summarize, this NCI study indicated statistically significant association between oral intubation exposure to 1,2-dichloroethane and the incidence of alveolar/bronchiolar adenomas in both male and female mice. The study also established a statistically significant relationship between oral intubation exposure and the occurrence of hepatocellular carcinomas in male mice. No such relationship was found for female mice, nor was an unequivocal association found between oral intubation exposure to 1,2-dichloroethane and the occurrence of squamous-cell carcinomas of the forestomach in either male or female mice.

In another study underway at the New York University Medical Center by Van Duuren, 1,2-dichloroethane and a suspected metabolite, chloroacetaldehyde, are being tested as initiators, promoters, and complete carcinogens using two-stage skin tests on female ICR/Ha mice. The results of these studies were expected to be reported during the fourth quarter of 1978.

7.2.3 Mutagenicity

Although 1,2-dichloroethane is weakly mutagenic in certain strains of *Salmonella* and can alter the DNA structure of *Escherichia coli* (Sect. 11.2.1), no reports were found indicating mutagenic activity of this compound in mammals.

7.2.4 Teratogenicity

No reports of mammalian teratogenic effects from 1,2-dichloroethane were found in an exhaustive search of the literature. Vozovaya (1974) found toxic (Sect. 7.2.1), but not teratogenic, effects from exposing gestating female rats to 57 mg/m^3 4 hr per day, six days per week for six months. However, the issue may be defined more clearly by two laboratory tests currently in progress. In the first study, separate groups of Sprague-Dawley rats and New Zealand white rabbits are being exposed to 0, 100, and 300 ppm 1,2-dichloroethane in closed inhalation chambers 6 hr per day, five days per week for eight months. At the termination of exposure, complete histopathological examinations of the offspring will be performed. Results of the study are expected in the second quarter of 1979 (Olson, 1977*b*).

The second laboratory experiment is a reproductive study in which separate groups of male and female Sprague-Dawley rats are being exposed to 0, 50, 100, and 300 ppm 1,2-dichloroethane in closed inhalation chambers 6 hr per day, five days per week. Exposure will continue through two litters. All animals will receive complete histopathological examinations at termination of exposure. A report of results is expected during the first quarter of 1979 (Olson, 1977*a*).

8. BIOLOGICAL ASPECTS IN OTHER VERTEBRATES

8.1 METABOLISM

No studies dealing with the metabolism of 1,2-dichloroethane in nonmammalian vertebrates were found.

8.2 EFFECTS

Pearson and McConnell (1975) measured the acute toxicity of 1,2-dichloroethane to *Limanda limanda* (dab) by placing five 15- to 20-cm-long fish in a glass apparatus through which water containing predetermined concentrations of 1,2-dichloroethane was passed. Because of the high volatility of the organic compound, no artificial aeration was used. The experimentally determined LC_{50} value was 115 mg/liter. This value is 2 to 20 times greater than that for other simple aliphatic chlorinated hydrocarbons and more than three orders of magnitude greater than the highest concentrations of 1,2-dichloroethane reported in a survey of U.S. waters (Sect. 4.2.2).

According to Adema (1976, as cited in Verschueren, 1977), the 96-hr LC_{50} in seawater at 15°C for the fish *Gobius minutus* is 185 mg of 1,2-dichloroethane per liter. Details of the experiment establishing this value were not available.

1,2-Dichloroethane has an aquatic toxicity rating (96-hr TL_m, species unspecified) of 1000 to 100 ppm, a range of values indicating relatively low toxicity (Fairchild, 1977). The Columbia National Fishery Research Laboratory of the Fish and Wildlife Service, U.S. Department of the Interior, estimated the LC_{50} value of technical grade 1,2-dichloroethane for rainbow trout as greater than 100 mg/liter (Cotant, 1978). This result applied to fish weighing 1.65 g in 13°C water of pH 7.1 and 40 mg/liter hardness.

Chickens may be exposed to 1,2-dichloroethane when fed grain previously fumigated with this compound. Alumot, Meidler, Holstein, and Herzberg (1976) studied possible effects of such exposure by adding 1,2-dichloroethane to the diet of male and female leghorn chickens for two years. They found no effects on growth, semen characteristics, or

fertility when concentrations of 250 and 500 ppm were used. However, egg weight decreased from the 4th month of the laying period at both concentrations. At 500 ppm egg production decreased from 7% to 25% between the 4th and 18th months. Based on these findings, the authors recommended limiting the exposure of cocks and growing chickens to concentrations of 250 ppm and a daily intake of 25 mg/kg. For laying hens, a tolerance of 100 ppm and a daily intake of 5 mg/kg were suggested.

Jensen et al. (1975) recorded the LC_{50} of EDC-tar on *Gadus morhua* (cod) and *Pleuroneetes platessa* (plaice) as approximately 5 ppm. The tar contained at least 80 substances, one of which was 1,2-dichloroethane. Thus, the toxic effects cannot be attributed to 1,2-dichloroethane alone, but the results are summarized here for the sake of completeness.

9. BIOLOGICAL ASPECTS IN INVERTEBRATES

9.1 METABOLISM

No studies of the metabolism of 1,2-dichloroethane in invertebrates were found.

9.2 EFFECTS

9.2.1 Toxicity

1,2-Dichloroethane and mixtures of chlorinated hydrocarbons containing 1,2-dichloroethane are toxic to annelids and arthropods and are widely used to control infestations of the latter in grains and other stored products. The names and compositions of some common mixtures are listed in the Appendix. The lethal effects of these fumigants in invertebrates depend on the susceptibility of the species, the amount of chlorinated hydrocarbon available at the site of action, and the duration of exposure. With insects the concentration of toxicant diffused through spiracles and the body wall is controlling (Vincent and Lindgren, 1965). Factors that increase the rate of insect respiration, and hence the effectiveness of a fumigant, include increases in temperature and in the carbon dioxide concentration of the insect atmosphere and a decrease in the oxygen concentration of the insect atmosphere (Bond, 1961). Considerable experimental variation occurs in determining the resistance of different species and life stages of invertebrates to 1,2-dichloroethane (Ellis and Morrison, 1967; Kenaga, 1961); consequently, many different estimates of the median lethal concentration for a particular species can be found in the literature. The lethal concentrations of 1,2-dichloroethane for a variety of invertebrates are summarized in Table 32. Similar information for mixtures of organic solvents containing 1,2-dichloroethane is given in Table 33.

In addition to the species listed in Tables 32 and 33, 1,2-dichloroethane or mixtures containing this compound are also toxic to a number of other invertebrates. Among these are the bark-eating caterpillar, *Indarbela quadrinotata* (Srivastava, 1972); the peach tree borer,

Table 32. Lethal concentrations of 1,2-dichloroethane for selected invertebrates

Invertebrate	1,2-Dichloroethane concentration (mg/liter)	Parameter	Test duration (hr)	Test conditions[a]	Reference
Barnacle (*Elminius modestus*)	186	LC_{50}	48	Not stated	Pearson and McConnell, 1975
Bean weevil (*Acanthoscelides obtectus*), adult	127.0	LC_{50}	2	Static, 21°C, 50% RH	Lindgren, Vincent, and Krohne, 1954
	186.0	LC_{95}	2	Static, 21°C, 50% RH	Lindgren, Vincent, and Krohne, 1954
	49.0	LC_{50}	6	Static, 21°C, 50% RH	Lindgren, Vincent, and Krohne, 1954
	83.0	LC_{95}	6	Static, 21°C, 50% RH	Lindgren, Vincent, and Krohne, 1954
Cadelle (*Tenebroides mauritanicus*), 4th instar larvae	43.0	LC_{50}	24	Static, 25°C, 70% RH	Bond and Monro, 1961
Confused flour beetle (*Tribolium confusum*), adult	4.03	LC_{50}	16	Static, 27°C, 40%-90% RH	Kenaga, 1961
	5.80	LC_{95}	16	Static, 27°C, 40%-90% RH	Kenaga, 1961
	9.95	LC_{50}	5	Static, 27°C, 40%-90% RH	Kenaga, 1961
	15.21	LC_{95}	5	Static, 27°C, 40%-90% RH	Kenaga, 1961
	18.07	LC_{50}	2	Static, 27°C, 40%-90% RH	Kenaga, 1961
	36.78	LC_{95}	2	Static, 27°C, 40%-90% RH	Kenaga, 1961
	7.72	LC_{50}	16	Static, 16°C, 40%-90% RH	Kenaga, 1961
	21.13	LC_{95}	16	Static, 16°C, 40%-90% RH	Kenaga, 1961
	19.92	LC_{50}	5	Static, 16°C, 40%-90% RH	Kenaga, 1961
	39.51	LC_{95}	5	Static, 16°C, 40%-90% RH	Kenaga, 1961

Table 32 (continued)

Invertebrate	1,2-Dichloroethane concentration (mg/liter)	Parameter	Test duration (hr)	Test conditions[a]	Reference
	48.98	LC_{50}	2	Static, 16°C, 40%-90% RH	Kenaga, 1961
	87.90	LC_{95}	2	Static, 16°C, 40%-90% RH	Kenaga, 1961
	9.19	LC_{50}	16	Static, 4°C, 40%-90% RH	Kenaga, 1961
	26.16	LC_{95}	16	Static, 4°C, 40%-90% RH	Kenaga, 1961
	24.50	LC_{50}	5	Static, 4°C, 40%-90% RH	Kenaga, 1961
	76.38	LC_{95}	5	Static, 4°C, 40%-90% RH	Kenaga, 1961
	62.53	LC_{50}	2	Static, 4°C, 40%-90% RH	Kenaga, 1961
	125.45	LC_{95}	2	Static, 4°C, 40%-90% RH	Kenaga, 1961
	32	LC_{99}	5	Static, 25°C, 70% RH	Bond and Monro, 1961
	132.0	LC_{50}	2	Static, 21°C, 50% RH	Lindgren, Vincent, and Krohne, 1954
	226.0	LC_{95}	2	Static, 21°C, 50% RH	Lindgren, Vincent, and Krohne, 1954
	53.0	LC_{50}	6	Static, 21°C, 50% RH	Lindgren, Vincent, and Krohne, 1954
	84.0	LC_{95}	6	Static, 21°C, 50% RH	Lindgren, Vincent, and Krohne, 1954
	5.8	LC_{50}	5	Static, 20°C, 60% RH	Ellis and Morrison, 1967
Drugstore beetle (*Stegobium paniceum*), adult	161.0	LC_{50}	2	Static, 21°C, 50% RH	Lindgren, Vincent, and Krohne, 1954
	242.0	LC_{95}	2	Static, 21°C, 50% RH	Lindgren, Vincent, and Krohne, 1954
	77.0	LC_{50}	6	Static, 21°C, 50% RH	Lindgren, Vincent, and Krohne, 1954

Table 32 (continued)

Invertebrate	1,2-Dichloroethane concentration (mg/liter)	Parameter	Test duration (hr)	Test conditions[a]	Reference
	128.0	LC_{95}	6	Static, 21°C, 50% RH	Lindgren, Vincent, and Krohne, 1954
Granary mite (*Leiodinychus krameri*), adult	24.60	LC_{50}	24	Static, 28°C, 90% RH	Rout and Maiti, 1974
Granary weevil (*Sitophilus granarius*), adult	44.5	LC_{50}	24	Static, 25°C, 70% RH	Bond and Monro, 1961
	>271.0	LC_{50}	2	Static, 21°C, 50% RH	Lindgren, Vincent, and Krohne, 1954
	>271.0	LC_{95}	2	Static, 21°C, 50% RH	Lindgren, Vincent, and Krohne, 1954
	127.0	LC_{50}	6	Static, 21°C, 50% RH	Lindgren, Vincent, and Krohne, 1954
	>135.0	LC_{95}	6	Static, 21°C, 50% RH	Lindgren, Vincent, and Krohne, 1954
	81.46	LC_{50}	6	Recirculating, 24°C, 75% RH	Bang and Telford, 1966
	139.04	LC_{90}	6	Recirculating, 24°C, 75% RH	Bang and Telford, 1966
Lesser grain borer (*Rhyzopertha dominica*), adult	137.0	LC_{50}	2	Static, 21°C, 50% RH	Lindgren, Vincent, and Krohne, 1954
	228.0	LC_{95}	2	Static, 21°C, 50% RH	Lindgren, Vincent, and Krohne, 1954
	65.0	LC_{50}	6	Static, 21°C, 50% RH	Lindgren, Vincent, and Krohne, 1954
	106.0	LC_{95}	6	Static, 21°C, 50% RH	Lindgren, Vincent, and Krohne, 1954
	60.07	LC_{50}	6	Recirculating, 24°C, 75% RH	Bang and Telford, 1966
	89.73	LC_{90}	6	Recirculating, 24°C, 75% RH	Bang and Telford, 1966
Mexican bean weevil (*Zabrotes pectoralis*), adult	52.0	LC_{50}	2	Static, 21°C, 50% RH	Lindgren, Vincent, and Krohne, 1954
	92.0	LC_{95}	2	Static, 21°C, 50% RH	Lindgren, Vincent, and Krohne, 1954

Table 32 (continued)

Invertebrate	1,2-Dichloroethane concentration (mg/liter)	Parameter	Test duration (hr)	Test conditions[a]	Reference
	26.0	LC_{50}	6	Static, 21°C, 50% RH	Lindgren, Vincent, and Krohne, 1954
	48.0	LC_{95}	6	Static, 21°C, 50% RH	Lindgren, Vincent, and Krohne, 1954
Polychaete (*Ophryotrocha labronica*)	400	LC_{50}	96	Rapid addition	Rosenberg, Grahn, and Johansson, 1975
	900	LC_{50}	96	Gradual addition	Rosenberg, Grahn, and Johansson, 1975
	400	Eggs rarely hatched	Not given	Not given	Rosenberg, Grahn, and Johansson, 1975
Red flour beetle (*Tribolium castaneum*)					
Larvae	41.55	LC_{50}	6	Recirculating, 24°C, 75% RH	Bang and Telford, 1966
	92.38	LC_{90}	6	Recirculating, 24°C, 75% RH	Bang and Telford, 1966
Pupae	70.23	LC_{50}	6	Recirculating, 24°C, 75% RH	Bang and Telford, 1966
	149.87	LC_{90}	6	Recirculating, 24°C, 75% RH	Bang and Telford, 1966
Adult	58.55	LC_{50}	6	Recirculating, 24°C, 75% RH	Bang and Telford, 1966
	76.95	LC_{90}	6	Recirculating, 24°C, 75% RH	Bang and Telford, 1966
Adult, DDT-resistant	41.73	LC_{50}	24	Static, 30°C	Bhatia and Bansode, 1971
Adult, DDT-susceptible	49.65	LC_{50}	24	Static, 30°C	Bhatia and Bansode, 1971
Adult	45.71	LC_{50}	24	Static, 30°C-33°C 50%-55% RH	Pradhan and Govindan, 1954

Table 32 (continued)

Invertebrate	1,2-Dichloroethane concentration (mg/liter)	Parameter	Test duration (hr)	Test conditions[a]	Reference
Red scale (*Aonidiella aurantii*), adult	173.20	LC_{50}	2	28°C–36°C	Wadhi and Soares, 1965
Rice weevil (*Sitophilus oryza*)					
Egg	19	LC_{50}	24	Static	Adkisson, 1957
	197.0	LC_{50}	2	Agitated, 27°C, 60% RH	Krohne and Lindgren, 1958
	>270.0	LC_{95}	2	Agitated, 27°C 60% RH	Krohne and Lindgren, 1958
Larvae	197.0	LC_{50}	2	Agitated, 27°C, 60% RH	Krohne and Lindgren, 1958
	>270.0	LC_{95}	2	Agitated, 27°C, 60% RH	Krohne and Lindgren, 1958
1st instar larvae	18	LC_{50}	24	Static	Adkisson, 1957
2nd instar larvae	16	LC_{50}	24	Static	Adkisson, 1957
3rd instar larvae	28	LC_{50}	24	Static	Adkisson, 1957
4th instar larvae	13	LC_{50}	24	Static	Adkisson, 1957
Pupae	13	LC_{50}	24	Static	Adkisson, 1957
	>270.0	LC_{50}	2	Agitated, 27°C, 60% RH	Krohne and Lindgren, 1958
	>270.0	LC_{95}	2	Agitated, 27°C, 60% RH	Krohne and Lindgren, 1958
Preemergent adult	12	LC_{50}	24	Static	Adkisson, 1957
Adult out of grain mass	13	LC_{50}	24	Static	Adkisson, 1957
Adult in grain mass	13	LC_{50}	24	Static	Adkisson, 1957
Adult	177.0	LC_{50}	2	Agitated, 27°C, 60% RH	Krohne and Lindgren, 1958
	>270.0	LC_{95}	2	Agitated, 27°C, 60% RH	Krohne and Lindgren, 1958
	166.0	LC_{50}	2	Static, 21°C, 50% RH	Lindgren, Vincent, and Krohne, 1954
	271.6	LC_{95}	2	Static, 21°C, 50% RH	Lindgren, Vincent, and Krohne, 1954
	66.0	LC_{50}	6	Static, 21°C, 50% RH	Lindgren, Vincent, and Krohne, 1954
	123.0	LC_{95}	6	Static, 21°C, 50% RH	Lindgren, Vincent, and Krohne, 1954

Table 32 (continued)

Invertebrate	1,2-Dichloroethane concentration (mg/liter)	Parameter	Test duration (hr)	Test conditions[a]	Reference
Saw-toothed grain beetle (*Oryzaephilus surinamensis*), adult	122.0	LC_{50}	2	Static, 21°C, 50% RH	Lindgren, Vincent, and Krohne, 1954
	230.0	LC_{95}	2	Static, 21°C, 50% RH	Lindgren, Vincent, and Krohne, 1954
	39.0	LC_{50}	6	Static, 21°C, 50% RH	Lindgren, Vincent, and Krohne, 1954
	77.0	LC_{95}	6	Static, 21°C, 50% RH	Lindgren, Vincent, and Krohne, 1954
	34.85	LC_{50}	6	Recirculating, 24°C, 75% RH	Bang and Telford, 1966
	50.51	LC_{90}	6	Recirculating, 24°C, 75% RH	Bang and Telford, 1966
	16.7	LC_{50}	5	Static, 20°C, 60% RH	Ellis and Morrison, 1967
Scud (*Gammarus fasciatus*), adult	>100	LC_{50}	96	Static, 21°C, pH 7.1, hardness of 40 mg/liter	Cotant, 1978
Shrimp (*Artemia salina*)	320	TL_m	24	Static	Price, Waggy, and Conway, 1974
(*Crangon crangon*)	170	LC_{50}	24	Static	Rosenberg, Grahn, and Johansson, 1975
Stonefly (*Pteronarcys californica*), 2nd year class	>100	LC_{50}	96	Static, 15°C, pH 7.1, hardness of 40 mg/liter	Cotant, 1978
Trogoderma granaria, 4th instar larvae	95.90	LC_{50}	24	Static, 33°C-38°C, 50%-55% RH	Pradhan and Govindan, 1954

[a]RH — relative humidity.

Table 33. Lethal concentrations for selected invertebrates of mixtures containing 1,2-dichloroethane

Invertebrate	Mixture	Concentration	Parameter	Test duration and conditions	Reference
Granary mite (*Leiodinychus krameri*), adult	3:1 (v/v) 1,2-dichloroethane and benzene	21.73 mg/liter	LC_{50}	24 hr, static, 28°C, 90% RH	Rout and Maiti, 1974
Rice moth (*Corcyra cephalonica*)	3:1 (v/v) 1,2-dichloroethane and carbon tetrachloride	960 mg/liter	Killed all 1st instars and >50% of all other instars	Static, 45-min exposure	Bhatia and Tonapi, 1975
Shrimp (*Leander adspersus*)	EDC-tar	2-8.5 ppm	LC_{50}	Not stated	Jensen et al., 1975
Starfish (*Ophiura texturata*)	EDC-tar	15-23 ppm	LC_{50}	Not stated	Jensen et al., 1975

Sanninoidea exitiosa (Snapp, 1958); the plum curculio, *Conotrachelus nenuphar* (Snapp, 1955); the lesser peach tree borer, *Synanthedon pictipes* (Snapp, 1955); the oriental fruit fly, *Dacus dorsalis* (Claypool and Vines, 1956); the pine root collar weevil, *Hylobius radicis* (Finnegan and Stewart, 1962); and the rice insect, *Trogoderma granarium* (Husain and Ahmad, 1958).

In other studies, Winteringham and Hellyer (1954) observed that lethal exposure of adult houseflies, *Musca domestica*, to 1,2-dichloroethane (concentration unspecified) for 1 hr caused a delayed depletion of ATP and arginine phosphoric acid, but not phosphoglycerate, in thoracic muscle tissue. The delayed depletion of ATP was said to support the theory that narcotics impede the oxidative synthesis of ATP.

9.2.2 Mutagenicity

Several studies involving exposure of eggs, larvae, or imagoes of *Drosophila melanogaster* to 1,2-dichloroethane have demonstrated that this chlorinated hydrocarbon, like 1,2-dibromoethane (Vogel and Chandler, 1974), is a potent mutagen. Rapoport (1960) treated a strain of yellow^{3p} *D. melanogaster* males in an early larval period of metamorphosis with 53 mg of 1,2-dichloroethane (in a volume of 20 liters) for 48 hr at room temperature and observed lethal sex-linked mutations in 4.57% of the chromosomes examined. The analysis was made in the second filial generation of a cross of male yellow^{3p} with female BCI/white. In a similar study the frequency of sex-linked mutations in adult male flies exposed 24 hr to 105 mg of 1,2-dichloroethane (in a volume of 20 liters) was 11.1%. Even higher mutagenic activity (22.2%, 20.8%) was observed in adult males exposed 6 hr at room temperature to 35 mg of 1,2-dichloroethane in a volume of 1.5 liters.

Shakarnis (1969) exposed three-day, virgin, wild-type *D. melanogaster* females to 10 ml of a 0.07% solution of 1,2-dichloroethane for intervals of 4 and 8 hr. Immediately after exposure at 25°C the females were mated either individually to males of the Meller-5 line (M-5) or in mass (five females x five males) to males having an inverted X chromosome marked with the genes w^aB. In the first generation (F_1) in both types of matings, the appearance of exceptional individuals resulting

from nondisjunction of X chromosomes was determined. The exceptional females were subjected to a genetic analysis, and the exceptional males were tested for sterility. In the second generation (F_2), the frequency of recessive sex-linked lethal mutations was determined using the M-5 method. Control matings were conducted simultaneously with all variations of the experiments. Exposure of female *Drosophila* imagoes to 1,2-dichloroethane for 4 hr produced small (0.03%) but significant increases ($P < 0.05$) in the frequency of nondisjunctions, but not in the frequency with which X chromosomes were lost. However, 8-hr exposures resulted in significant increases in the frequencies of both exceptional females (0.18%) and males (0.09%) compared with controls (0.00%). Exposure to 1,2-dichloroethane also increased the frequency of recessive sex-linked lethal mutations. In experiments involving 4- and 8-hr exposures to 1,2-dichloroethane, 3.22% and 5.91% lethal mutations, respectively, were observed compared with 0.30% in the controls. Shakarnis attributed the observed mutagenic activity of 1,2-dichloroethane to reactions of this compound with DNA molecules so that a change in nucleotide composition or cross-links between DNA molecules occurred. He assumed that changes in the nucleotide composition resulted in recessive sex-linked lethal mutations and that cross-linkages between DNA molecules led to chromosomal nondisjunctions. In another study, using a radioresistant strain of *D. melanogaster*, Sharknis (1970) observed both recessive lethal mutations and chromosome nondisjunctions in adult females exposed at 25°C to vapor from a 0.07% solution of 1,2-dichloroethane for 4 to 6 hr. An attempt to discover the mechanism responsible for chromosome nondisjunction was unsuccessful.

Later, in 1978, Nylander et al. also demonstrated that 1,2-dichloroethane had high mutagenic activity in *D. melanogaster*. Eight batches of 100 larvae having a stable or unstable transposable genetic element in the X chromosome were supplied with food containing 0.1% or 0.5% 1,2-dichloroethane. Experiments were conducted at 25°C and 75% relative humidity. Mutagenicity was measured by the frequency of somatic mutations for eye pigmentation. Both genotypes showed very highly significant increases ($P < 0.001$) in the rate of somatic mutations when exposed to 0.1% 1,2-dichloroethane (stable, 4.20%; unstable, 9.48%) and 0.5%

1,2-dichloroethane (stable, 7.21%; unstable, 24.88%) compared with controls (stable, 0.045%; unstable, 0.075%). The high frequency of mutations indicated the existence in *Drosophila* of a metabolic activating system. The authors postulated that activation involved glutathione mediated by glutathione *S*-transferases.

10. BIOLOGICAL ASPECTS IN PLANTS

Only a few studies have dealt with the effects of 1,2-dichloroethane on plants. However, several reports linked effects on plants or seeds with mixtures of chlorinated hydrocarbons containing 1,2-dichloroethane. The two most common blends are Rindite, a 7:3:1 mixture by volume of 2-chloroethanol, 1,2-dichloroethane, and carbon tetrachloride, and an unnamed 3:1 mixture by volume of 1,2-dichloroethane and carbon tetrachloride. Rindite is used primarily to stimulate early sprouting of certain dormant plant species, such as potato tubers. The 3:1 mixture of 1,2-dichloroethane and carbon tetrachloride is used to disinfect stored grains from insect infestation. The principal role of carbon tetrachloride in this mixture is to make the solution less flammable and to aid in spreading 1,2-dichloroethane uniformly through the mass of stored grain. Obviously, however, neither the effects of this mixture on grain nor of Rindite on tubers can be attributed solely to 1,2-dichloroethane; other solvents and synergistic effects may also contribute to the results.

Because 1,2-dichloroethane or mixtures containing this chlorinated hydrocarbon are used extensively as grain and seed fumigants, it is commonly supposed by some that such mixtures are not toxic to seeds and do not inhibit seed germination (Patterson et al., 1975). However, as the following reports indicate, both toxic and mutagenic effects may occur, depending on species susceptibility and exposure.

10.1 METABOLISM

Khramova and Zhirnov (1973) studied the uptake and elimination of 1,2-dichloroethane and carbon tetrachloride in plants irrigated with industrial effluents containing unspecified amounts of these chlorinated compounds. The concentrations of 1,2-dichloroethane ranged from 0.83 to 10.41 mg/kg of raw weight in beet roots, 0.83 to 4.17 mg/kg in beet leaves, 11.66 to 43.75 mg/kg in corn, and 1.25 to 64.54 mg/kg in grasses. No permanent accumulation of 1,2-dichloroethane occurred in any plant, but temporary peak concentrations were observed in beet roots on the

6th and 7th day after irrigation. Similar maxima occurred on the 3d and 4th day for beet leaves, corn, and grasses. No 1,2-dichloroethane was found in corn and grasses 10 days after irrigation, and beet leaves and roots were free of contamination in 12 and 20 days respectively. The authors attributed the presence of 1,2-dichloroethane in plants to differences in rates of absorption and removal processes. They observed that detoxification or elimination occurs more slowly in roots than in leaves, making the former a greater toxicological hazard to humans.

10.2 EFFECTS

Ehrenberg et al. (1974) studied the reaction kinetics and mutagenic activity of 1,2-dichloroethane and other β-halogenoethylating or methylating compounds on barley kernels. Barley seeds (two-rowed variety Bonus) were exposed in closed tubes to 30.3 millimoles of 1,2-dichloroethane at 20°C for 24 hr. This treatment was lethal to half of the seeds; the balance subsequently grew to maturity and were examined for mutations. The mutation frequency in the survivors was 6.8%. According to the authors' model, the lethal and mutagenic effectiveness of 1,2-dichloroethane and the other β-halogenoethylating agents was about 100 times greater than expected based on the frequency of initial reactions with DNA. The increased effectiveness was attributed to the formation of toxic, mustard-type compounds in reactions with thiols and amines and to the bifunctional nature of β-halogenoethylating agents which permits cross-linking reactions with DNA. Alkylation and cross-linking of DNA prevent exposed cells from replicating and undergoing mitosis.

Treatment with 1,2-dichloroethane inhibits germination and increases mutations in pea seeds. Both effects were observed in eight varieties of peas following the application at 12°C of the chlorinated hydrocarbon at a rate of 300 g/m^2 for 120 hr (Kirichek, 1974).

Caswell and Clifford (1958) determined that prolonged storage of certain varieties of maize with 1,2-dichloroethane and mixtures containing this compound affected the vigor of subsequent seedling growth. The effect was less pronounced when the storage temperature was lowered below that generally prevailing in the tropics.

Kristoffersson (1974) found that very low levels (concentration unspecified) of 1,2-dichloroethane were toxic to *Allium* roots, but no chromosome-breaking effect was seen. However, exposure (ccncentration unspecified) to 1,2-dichloroethane for 12 days did induce C-mitoses.

Susceptible varieties of potato tubers, such as Early Yellow, Early Rose, Kisvarda-Rose, and Lorch, alter their normal dormancy cycle when exposed for 48 hr to 0.8 ml of Rindite per kilogram of tuber and sprout in 5 days rather than in the usual 28 days if untreated. Rindite appears to act in susceptible varieties by reducing the concentration of growth-inhibiting substances such as indoleacetic acid. There is a concurrent breakdown of proteins into amino acids and a decrease in ascorbic acid content (Szalai et al., 1957; Varga and Ferenczy, 1956). The fixation of carbon dioxide, which is negligible during the dormant period, is also increased on exposure of the tuber to Rindite vapors (Jolivet, 1968). The manner in which Rindite causes these changes has not been established, nor is the role of 1,2-dichloroethane apparent.

Thorup (1957) used Rindite to successfully break the dormancy of small beech trees and branches. After a 24-hr exposure to 51 ml of Rindite in a 15-liter container, trees with green, yellow, brown, and withered leaves all burst into leaf weeks before untreated trees responded.

Rindite treatments hastened the breaking of bud rest in grapevine cuttings of the Thompson Seedless variety. When cuttings were immersed 1 min in 1.9% Rindite solution and then were placed in an airtight container for 24 hr or were exposed for 24 hr to 0.25 ml Rindite per liter of space, 90% to 100% of the cuttings budded within 26 days (Weaver, McCune, and Coombe, 1961). Alleweldt (1960) also observed a similar effect on dormant buds of grape cuttings and of one-year-old pot-grown plants.

Izard and Hitier (1958) examined the effects of Rindite on seeds of *Orobanche*, a parasite of tobacco. The seeds were exposed at 24°C for several hours to 0.1 ml of the solvent in a closed tube. Seed dormancy was not broken, but subsequent germination was inhibited. The authors did not suggest a mechanism of inhibition nor indicate the role, if any, of 1,2-dichloroethane.

Kamel (1959) determined the effect of 3:1 mixtures of 1,2-dichloroethane and carbon tetrachloride on the germination of ten varieties of wheat, barley, rice, and corn. Samples were exposed to one-half normal (0.18 mg/liter of space), normal (0.35 ml/liter of space), and double normal (0.70 ml/liter of space) concentrations of the fumigant for 5, 10, and 30 days at relative humidities of 46%, 49.5%, and 50.8% respectively. The seeds were sealed with the fumigant in gasoline cans for the required times, then ventilated, and germinated in sand. If normal radicals and plumules were formed, germination was considered normal. Stunted growth and nongerminating seeds were counted together and tabulated as dead seeds. Experiments were performed in duplicate with control samples, and results were reported at the $P = 0.05$ level of significance. Giza 135 wheat and Toson wheat were not affected by any concentration for exposures of 5 and 10 days, but after 30 days 83% to 99% of both varieties failed to germinate, even when exposed to the lowest concentration. The barley variety Giza 73 was unaffected by any concentration or exposure period, but Balady 16 barley was mildly affected at all three concentrations after an exposure of 30 days. The sensitivity of Giza 68 barley to the effects of the fumigant was intermediate to the other barley varieties. The germination of exposed rice species also varied greatly. Only 20% of the Japanese Pearl variety survived exposure for 30 days at the low concentration. In comparison, the corresponding survival rates for Japanese Selected and Giza 14 varieties averaged 85% and 74%. About one-third of the seeds of the most resistant strain failed to germinate following an exposure of 30 days at a concentration of 0.70 ml/liter, compared with 12% for controls. The unfavorable effect of the fumigant on the germination of Syrian Early American and Giza Balady varieties of corn increased significantly with increases of exposure at a given concentration and with increases of concentration at a fixed exposure time. After an exposure of 30 days to the normal fumigation concentration, about one-third of the seeds of each variety failed to germinate, compared with only 7% for controls.

In summary, the 3:1 mixture of 1,2-dichloroethane and carbon tetrachloride generally had no effect on seeds exposed to 0.18 mg/liter of

space for five days. Little or no effect was observed with a concentration of 0.35 ml/liter for five days. However, the germination of several species was inhibited by five-day exposures to 0.70 ml/liter. In some cases, inhibition of germination increased with increasing time of exposure; usually, the unfavorable effect on germination increased with increasing concentrations of fumigant. In most of the tests, the effect on seed germination varied with variety; however, corn was a notable exception.

11. BIOLOGICAL ASPECTS IN MICROORGANISMS

Studies of interactions between 1,2-dichloroethane and microorganisms have been prompted primarily by concern over environmental damage from waste disposal practices, evidence of mutagenic characteristics of 1,2-dichloroethane and some of its metabolites, and the need for fumigants compatible with specific agricultural problems. In the latter case, mixtures of halogenated hydrocarbons, not pure 1,2-dichloroethane, are usually used. It should be noted that effects of these fumigants are not necessarily attributable to 1,2-dichloroethane because other compounds, as well as synergism, may be contributing factors to their action. Despite this ambiguity, these reports are discussed here to ensure full coverage of the subject.

11.1 METABOLISM

No studies of the metabolism of 1,2-dichloroethane by microorganisms were found.

11.2 EFFECTS

11.2.1 Bacteria, Viruses

1,2-Dichloroethane inhibits the growth of a variety of bacteria under laboratory conditions, but its effectiveness varies with concentration and species. In a series of experiments, Kulshrestha and Marth (1970, 1974*a-f*) inoculated 50-ml portions of nutrient or APT broths and sufficient bacteria to yield a final concentration of 100 to 1000 organisms per milliliter, added 1, 10, 100, or 1000 ppm 1,2-dichloroethane, and sealed the resulting solutions in epoxy-lined cans for incubation at 37°C. After 2, 5, 8, 11, and 14 hr, the number of bacteria was counted and the degree of inhibition or stimulation was determined. The growth of *Streptococcus cremoris* was inhibited relative to controls by 100 ppm 1,2-dichloroethane after only 2 hr of exposure. The growth of *Escherichia coli*, *Streptococcus lactis*, and *Leuconostoc citrovorum* were significantly inhibited after 5 or 8 hr

by 10 ppm 1,2-dichloroethane, but 100 ppm and periods of incubation varying from 2 to 11 hr were required to inhibit the growth of *Salmonella typhimurium*, *Staphylococcus aureus*, and *Streptococcus thermophilus*. Hagstrom and Normark (1974) studied the toxic effects of EDC-tar, a vinyl chloride waste product containing 1,2-dichloroethane and other short-chained chlorinated hydrocarbons, on *E. coli*. They found a strong bactericidal effect when a water extract (0.5% v/v) of the EDC-tar was added to log-phase cells resuspended in a sodium chloride solution. However, no lethal effect was observed when *E. coli* cells were suspended in a sodium chloride solution containing the same concentration of purified 1,2-dichloroethane as was found in the first water extract of the EDC-tar. The authors suggested that components other than 1,2-dichloroethane were responsible for the bactericidal action of the EDC-tar extract, but no compounds were identified.

1,2-Dichloroethane also interacts mutagenically with some bacteria, both with and without metabolic activation. In the Ames test (Ames and Yanofsky, 1971; McCann, Choi, Yamaski, and Ames, 1975), reversion of histidine mutants of *S. typhimurium* strains TA100, TA1530, and TA1535, but not TA1538, occurred when these bacteria were incubated on agar for two days at 37°C with 1,2-dichloroethane and rat liver homogenates (Brem, Stein, and Rosenkranz, 1974; Rannug, Sundvall, and Ramel, 1978; Rosenkranz, Carr, and Rosenkranz, 1974; Rosenkranz, 1977; Tardiff, Carlson, and Simmon, 1976; Voogd, 1973; Voogd, Jacobs, and van der Stel, 1972). The mutagenic activity of 1,2-dichloroethane in *S. typhimurium* is relatively weak (Rannug and Ramel, 1977), but that of chloroacetaldehyde, a probable metabolite of 1,2-dichloroethane in mammalian systems, is hundreds of times more pronounced on a molar basis (McCann, Simmon, Streitwieser, and Ames, 1975). 1,2-Dichloroethane becomes a more potent mutagen for *S. typhimurium* when glutathione is present in the test system, apparently because of the formation of a conjugate between 1,2-dichloroethane and glutathione (Rannug and Ramel, 1978; Rannug, Sundvall, and Ramel, 1978).

1,2-Dichloroethane can also alter the DNA structure of *E. coli*. Brem, Stein, and Rosenkranz (1974) obtained evidence of this action by incubating normal and DNA polymerase-deficient *E. coli* with 1,2-dichloroethane on agar plates for 8 hr at 37°C, then comparing the areal ratios

of the zones of inhibition of each bacterial strain. The DNA polymerase—deficient strain was unable to repair 1,2-dichloroethane-induced damage to its DNA and did not grow at the same rate as normal *E. coli* that could repair such damage. The tendency of 1,2-dichloroethane to alter the DNA of *E. coli*, like its mutagenic potential with *S. typhimurium*, is weak. Both polybrominated alkanes and mixed bromochloroalkanes produced much greater preferential inhibition of the DNA polymerase—deficient *E. coli* than did 1,2-dichloroethane.

McGaughey (1975) examined the toxicity of a 3:1 mixture of 1,2-dichloroethane and carbon tetrachloride on *Bacillus thuringiensis* and a granulosis virus that were suggested as pathogenic control agents for the Indian meal moth, *Plodia interpunctella*, in stored wheat. Wheat samples of 1 kg were separately treated with aqueous suspensions of the pathogens, dried, and fumigated with 55 ml or 110 ml of a 3:1 mixture of 1,2-dichloroethane and carbon tetrachloride at 25°C and 60% relative humidity. The treated wheat was then infested with 25 or 100 Indian meal moth eggs and maintained at constant temperature and humidity until adults emerged. Mortality was calculated from the number of eggs introduced and the number of adults that emerged. Based on mortality data, fumigation by the 1,2-dichloroethane—carbon tetrachloride mixture had no adverse effect on either *B. thuringiensis* or the granulosis virus.

In contrast to *B. thuringiensis*, *Rhizobium* sp. appears sensitive to mixtures of 1,2-dichloroethane and other chlorinated solvents. Kulkarni, Sardeshpande, and Bagyaraj (1975) examined the effects of a mixture of 1,2-dichloroethane and carbon tetrachloride (composition unspecified) on the symbiosis of *Rhizobium* sp. with groundnut (*Arachis hypogae*) seeds. After treatment for seven days in closed 600-ml bottles containing the fumigant at the dose rate of 3 ml/kg, seeds were treated with a peat culture of *Rhizobium* sp. effective against groundnut and sown in pots of loam soil containing plant nutrients at pH 6.8. Eight weeks later the plant yield and the number, weight, and leghaemoglobin content of the resulting nodules were determined. Plants derived from seeds fumigated with mixtures of 1,2-dichloroethane and carbon tetrachloride produced only 36% by count and 32% by weight of the nodules grown by control plants. The final weight of dry plant matter produced by the treated seeds was

only 75% of that from control plants. No reduction in yield of nodules or dry plant matter was experienced when seeds were treated with malathion instead of the 1,2-dichloroethane—carbon tetrachloride mixture. The authors attributed the reduction in plant and nodule yields to adverse effects of the fumigant on the *Rhizobium*-legume symbiosis, but no detailed explanation of the mechanism was attempted.

11.2.2 Fungi

The fungi *Diplodia natalensis*, *Phomopsis citri*, and *Penicillium digitatum* tolerate 1,2-dichloroethane well. Berry (1958) studied the effect of exposing these citrus fruit pathogens to a mixture of 1,2-dichloroethane (63.52%) and trichloroethane (35.48%). In preliminary tests, mycelial growth of the fungi was not measurably altered by exposures to the solvent mixture, but after 6 hr spore germination by *P. citri* and *P. digitatum* ceased. Germination of *D. natalensis* spores remained high. In subsequent studies, aqueous spore suspensions were placed on agar plates and exposed at 28°C to the gas mixture at a concentration of 3.4 ml/ft^3. At the end of 6- to 30-hr treatment periods, spore suspensions were aerated. In all cases germination of the treated spores increased sharply 4 hr after aeration, and after 16 hr it rivaled that of untreated spores. The action of the gas mixture on these microorganisms thus appears to be fungistatic rather than fungicidal.

Studies by Vandergraft et al. (1973) indicate an even greater tolerance of 1,2-dichloroethane by some fungi. These authors examined the effect of fumigation on the formation of mycotoxin by eight strains of *Aspergillus flavus*, *A. parasiticus*, *A. ochraceus*, and *Penicillium viridicatum*. Fumigated and nonfumigated whole-grain wheat was used in the study. The fumigated grain was treated with a 3:1 mixture of 1,2-dichloroethane and carbon tetrachloride at a rate of 3 gal per 1000 bu for 72 hr. After aeration the grain was stored for two weeks at 0°C before inoculation with fungi. Inoculated samples were harvested after incubation for 6 days at 28°C (*A. flavus*, *A. parasiticus*, and *A. ochraceus*) or for 12 days at 20°C (*P. viridicatum*). Mycotoxins were produced by all fungi on all samples of fumigated wheat. Treating the wheat with the

fumigant appreciably increased the mycotoxin levels in some strains (*A. flavus* NRRL 3251, NRRL 3353, and NRRL 3357), decreased it in others (*A. flavus* NRRL 3517 and *A. parasiticus* NRRL 2999 and NRRL 3145), and left it essentially unchanged in two strains (*A. ochraceus* NRRL 3174 and *P. viridicatum* NRRL 3712). Similar results were obtained in parallel experiments using sterilized grain, except the amounts of aflatoxin and ochratoxin were generally higher.

11.2.3 Nematodes

Chu and Tsai (1961) studied the use of fumigants for the control of nematodes in Taiwan fields growing sugarcane. Under field conditions, larvae of *Pratylenchus* sp., *Meloidogyne* sp., *Dorylaimus* sp., and *Rotylenchus* sp. were resistant to Chlorofin-22 (identified as 1,2-dichloroethane, but no composition given) applied at a rate of 450 kg/ha. Subsequent laboratory studies also indicated little or no killing effect when 10 kg of nematode-infested soil was exposed to 2 or 4 ml of Chlorofin-22 in an unsealed glass vessel for one week.

11.2.4 Algae

Pearson and McConnell (1975) assessed the toxicity of 1,2-dichloroethane to the unicellular alga *Phaeodactylum tricornutum* by measuring changes in the uptake of ^{14}C-labeled carbon dioxide during photosynthesis. The concentration of 1,2-dichloroethane at which a 50% reduction in uptake was observed was 340 mg/liter. Other experimental conditions were not stated.

A study by Loabacheva (1957, as cited in Johns, 1976) indicates that many common waterborne microflora tolerate 1,2-dichloroethane at a concentration of 25 mg/liter. This concentration is much higher than those generally reported for U.S. surface waters.

Bringmann (1975) determined threshold values of 125 biologically harmful water pollutants by measuring the lowest effective dose that induced inhibition of cell proliferation by the blue alga *Microcystis aeruginosa*. The technique involved preparation of a series of test cultures containing varying amounts of pollutant. After aging for eight

days under uniform conditions, the algal concentration was determined by turbidimetry and compared with that of standard stock solutions. Measured values of the degree of transmission of three test cultures were used to calculate the lowest effective pollutant dose. The lowest concentration of 1,2-dichloroethane causing inhibition of cell proliferation was 105 mg/liter. In a later study of the bacteria *Pseudomonas putida*, the threshold concentration of 1,2-dichloroethane was determined to be 135 mg/liter (Bringmann and Kühn, 1976).

12. IN VITRO AND BIOCHEMICAL STUDIES

1,2-Dichloroethane inhibits the growth of HeLa cells in vitro. Gradiski et al. (1974) observed this effect by adding 1 ml of 1,2-dichloroethane to a test tube containing 35,000 HeLa cells per milliliter. After incubation at 37°C for three days, the inhibitory dose (ID_{50}) was determined to be 2.3×10^{-6} mole/ml. This in vitro toxicity of 1,2-dichloroethane for HeLa cells is roughly comparable to that observed for mice exposed intraperitoneally. The ID_{50} observed for 1,2-dichloroethane during these studies was greater than that for any of the other common aliphatic chlorinated hydrocarbons tested, except dichloroethylene.

Holmberg and Malmfors (1974) determined the cytotoxicity of 33 organic solvents, including 1,2-dichloroethane, by separately incubating varying quantities of the solvents with Ehrlich-Landschütz diploid (ELD) ascitic tumor cells obtained from albino mice from the Naval Medical Research Institute. After washing, the ascitic cells were resuspended in Eagle's suspension medium containing 10% heat-inactivated calf serum, antibiotics, and glutamine at a concentration of about 10^6 cells per milliliter. Portions of this preparation were incubated at 37°C for varying times up to 5 hr with 50, 100, and 200 ppm 1,2-dichloroethane. A dye exclusion test was used to estimate the number of cells in a stage of irreversible injury. The percentage of dead ELD cells occurring during incubation with 1,2-dichloroethane varied from about 3% after 1 hr to about 9% after 5 hr, compared with 2% to 4% for controls. 1,2-Dichloroethane was only mildly toxic to the test cells as compared with tetralin, crotonic aldehyde, formaldehyde, and acrolein; it was also less toxic than benzyl chloride, carbon tetrachloride, methyl ethyl ketone, and 1,1,1,2-tetrachloroethane.

Holmberg, Jakobson, and Malmfors (1974) studied the effect of 1,2-dichloroethane and other organic solvents on rat erythrocytes during hypotonic hemolysis. A prepared erythrocyte stock suspension was added to a hypotonic saline buffer with and without the addition of 1,2-dichloroethane and other organic solvents. Samples were centrifuged after incubation at 37°C for 30 min. Absorption of the supernatant solutions was determined spectrophotometrically, and the degree of hemolysis was expressed as a percentage of the control cells. The ED_{50}, the effective concentration

of 1,2-dichloroethane reducing the degree of hemolysis by 50% compared with control cells, was 1500 ppm. The concentration of 1,2-dichloroethane causing maximum protection was 2000 ppm. The inhibition of hemolysis was associated with an increase in the critical cell volume of the erythrocytes, indicating that the protective effect was related to a solvent-induced increase in membrane stability of the red cells.

Cox, King, and Parke (1976) investigated the binding of haloalkanes with hepatic microsomal cytochrome P-450 under aerobic and anaerobic conditions using a spectrometric technique. They observed spectral changes between 350 nm and 500 nm when selected substrates interacted with oxidized hepatic microsomal P-450. Some spectral changes, labeled type I spectra, were established as phospholipid dependent. When 1,2-dichloroethane was used as a substrate under aerobic conditions, no type I spectra were observed, indicating that this chlorinated hydrocarbon did not interact appreciably with cytochrome P-450 under the conditions of the experiment. Van Dyke and Wineman (1971) studied the enzymatic metabolism of 1,2-dichloroethane using rat liver microsomal suspensions activated with cyanide and either glutathione or cysteine. Employing a liquid labeled with ^{36}Cl, these investigators found that 10% of the initial dose of 1,2-dichloroethane was dechlorinated in 30 min with formation of formaldehyde and hydrogen ion.

Bray, Thorpe, and Vallance (1952) used rat liver extracts to study the enzymatic liberation of chloride ions from 1,2-dichloroethane and other chlorinated hydrocarbons. The authors were unable to conclude that the dechlorination step was entirely enzymatic; they found appreciable dechlorination of most solvents in the absence of the liver extract. Non-enzymatic dechlorination of 1,2-dichloroethane and other chlorinated hydrocarbons was attributed to reactions between sulfhydryl groups in proteins and the halogen atom of the chlorinated solvent.

13. ANALYTICAL METHODS AND MONITORING TECHNIQUES

Because of its high volatility 1,2-dichloroethane most often occurs in the environment as an atmospheric pollutant; therefore, analytical methodology is concerned mainly with measuring the concentration of 1,2-dichloroethane in air. In general, procedures for analyzing 1,2-dichloroethane in other media are similar to those described for air samples, except that a preliminary extraction step is used to isolate the chlorinated hydrocarbon from its matrix. For example, water and sediment samples are frequently extracted with *n*-pentane, and an aliquot of the latter is taken for further processing. Typically, biological tissues are first macerated and then extracted by codistillation with *n*-pentane (Pearson and McConnell, 1975). The pentane extract is then processed in the manner described for air samples.

Many analytical methods are available for determining halogenated hydrocarbons in air. Usually, all of these techniques are applicable to the analysis of 1,2-dichloroethane, but interferences may occur in some methods if mixtures of halogenated hydrocarbons are present in the sample. The methods that have been used most frequently for 1,2-dichloroethane are chloride analysis, colorimetry, direct-reading detector tubes, halide meters, infrared spectrometry, and gas chromatography. These methods are described below.

13.1 CHLORIDE ANALYSIS

In the chloride analysis method the sample is collected by drawing 1,2-dichloroethane-contaminated air through a fritted glass scrubber, impinger, or absorption tube containing a suitable liquid or solid absorbent such as 2-aminoethanol or silica gel. The sample is then burned (Elkins, Hobby, and Fuller, 1937; Kohn-abrest, 1934; Peterson, Hoyle, and Schneider, 1956) or hydrolyzed (Winteringham, 1942, as cited in Malone, 1971) to convert covalent chlorine to the ionic form. Liberated chloride is determined by titration with silver nitrate. Samples and known controls are compared to obtain the concentration of 1,2-dichloroethane in the original sample. Typically, 1 to 5 ppm 1,2-dichloroethane in 60

liters of air can be detected (Leithe, 1970). Unfortunately, the chloride analysis method is not specific for 1,2-dichloroethane. The procedure responds to the presence of any halogenated hydrocarbon. Because of this deficiency and the availability of more convenient and sensitive techniques, this early analytical method is rarely used today.

13.2 COLORIMETRY

The most common colorimetric method for determining 1,2-dichloroethane is based on the Fujiwara reaction, which has a detection limit of about 20 ppm (Jacobs, 1941). In this procedure a stream of air containing 1,2-dichloroethane is aspirated through a bubbler bottle containing aqueous pyridine. Potassium hydroxide and methyl ethyl ketone are added, and the solution is heated on a water bath. After cooling for a fixed time, the solution develops a red color with a light absorbance proportional to the concentration of 1,2-dichloroethane initially present in the sample. Typically, absorbance is measured with a spectrophotometer at 415 nm. Carbon tetrachloride, chloroform, and trichloroethylene do not interfere in approved procedures (Leithe, 1970), but chlorine introduces a bias when present in concentrations of 3 ppm or more. Results must be corrected for the fact that only 80% of dichloroethane is initially absorbed by the aqueous pyridine solution. The colorimetric method is faster than the chloride method (Sect. 13.1), but like the latter it may not be specific for 1,2-dichloroethane when mixtures of chlorinated hydrocarbons are present. The colorimetric method is less convenient and sensitive than other available techniques and is seldom used today.

13.3 DIRECT-READING DETECTOR TUBES

Direct-reading detector tubes are glass cylinders packed with solid chemicals that change color when a measured flow of air containing a halogenated hydrocarbon passes through the tube. The color change, or stain, is caused by halogen ions liberated from the hydrocarbon contaminant in the air sample. Thus, detector tubes are not usually specific for individual chlorinated hydrocarbons. Depending on the type of detector tube, a

variable volume of sample is collected until a standard length of stain is obtained or a fixed volume of sample is passed through the tube. In the latter case, the length of stain is measured against a calibration scale. The measuring range for a typical commercial indicator for 1,2-dichloroethane varies from 25 to 450 ppm (Saltzman, 1969). Government regulations for indicator tubes require an accuracy of ±25% (42 CFR 84.50). In general, direct-reading detector tubes are useful for evaluating toxic hazards in industrial atmospheres, but they lack specificity and sensitivity for environmental applications and are seldom used for this purpose.

13.4 HALIDE METERS

Halide meters are photometric devices that detect the increased brilliance which occurs when an electrical arc operates in an atmosphere contaminated with halogenated compounds other than fluoride. The instruments are sensitive to all nonfluoride halogens or halogen-containing compounds; consequently, they are not specific for 1,2-dichloroethane. However, in instances where 1,2-dichloroethane is known to be the only halogenated contaminant in the sampled air, halide meters are suitable for use as continuous monitors (National Institute for Occupational Safety and Health, 1976). Recent versions of this instrument have detection limits less than 1 ppm, expressed as the halide (First, 1972).

13.5 INFRARED SPECTROMETRY

1,2-Dichloroethane has a unique infrared absorption spectrum. This characteristic property can be conveniently used to identify and quantitatively measure the concentration of 1,2-dichloroethane in air through the use of an infrared recording spectrophotometer. The technique is rapid, precise, and suitable for continuous monitoring of industrial operations or for individual analysis of isolated samples. In a typical application of the latter type, contaminated air is collected in a 10-liter plastic bag for later transfer to an evacuated 10-m gas cell. Insertion of this cell into the infrared spectrophotometer allows identification and quantification to be made in about 10 min with a relative

precision of about 5%. Quantitative measurements are usually made at the wavelength of the strongest absorption band, 13.90 μm. The minimum detectable quantity of 1,2-dichloroethane is about 2.3 ppm, but ten times this concentration is usually required for specific identification. Overlapping spectra from other air contaminants may cause interference with the identification and quantification of 1,2-dichloroethane samples; consequently, adequate experience and training of the analyst is essential. This method of determining 1,2-dichloroethane is less sensitive than the gas chromatographic technique and is inadequate for analysis of many environmental samples. Nevertheless, infrared spectrometry is a recommended method for determining 1,2-dichloroethane in air samples when equipment is available and instrumental sensitivity is sufficient (American Industrial Hygiene Association, 1965).

13.6 GAS CHROMATOGRAPHY

Gas chromatography is currently the method of choice for determining 1,2-dichloroethane and other organic solvents in air or fumigant mixtures (Cropper and Kaminsky, 1963; Horwitz, 1975; Larkin et al., 1977; Levadie and Harwood, 1960; National Institute for Occupational Safety and Health, 1974; Rushing, 1958; Starshov and Ivanova, 1969; White et al., 1970). The technique provides quantitative data that can be specific for different chlorinated hydrocarbons if the proper detector and adequate care are used. Many variations of the basic method exist. In one preferred procedure (National Institute for Occupational Safety and Health, 1974), 1,2-dichloroethane and other organic solvents present in a known volume of air are collected in a charcoal tube and subsequently desorbed with carbon disulfide (White et al., 1970). An aliquot of the desorbed sample is injected into a gas chromatographic column (20 ft x 1/8 in.) packed with 10% FFAP on 80/100-mesh DMCS Chromosorb W and equipped with a flame ionization detector. The area of the resulting 1,2-dichloroethane peak is determined and compared with areas obtained by injecting standards. A detection limit of 0.05 mg per sample (1 to 12 liters of air) is typical. The mean relative standard deviation of the analytical method is 8%, and that for the method including operation of an approved personal

sampling pump is 10%. The accuracy of the overall sampling and analytical process is about 10%. The efficiency of desorbing 1,2-dichloroethane from charcoal may vary substantially from one batch to another and must be determined experimentally in order to achieve the cited precision and accuracy.

One weakness of the gas chromatography method involves the detector. Ordinarily, a flame ionization or an electron-capture type detector is used, but neither of these instruments specifically detects individual chlorinated hydrocarbons. In some instances, one or more compounds having retention times similar to 1,2-dichloroethane can emerge from the chromatographic column unresolved from the 1,2-dichloroethane peak and thus bias the analysis. This circumstance could be prevented with a detector that positively identifies each sample component. Such results can be obtained by using a mass spectrometer as the chromatograph detector. Although this arrangement is considerably more costly than the conventional configuration, increased sensitivity and precision are gained as well as specificity. For example, Grimsrud and Rasmussen (1975) used a linked gas chromatograph and mass spectrometer to specifically determine 1,2-dichloroethane in air with a precision of 5% and a detection limit of 5 ppt.

13.7 MONITORING TECHNIQUES

Very little environmental monitoring for 1,2-dichloroethane has been done, and no well-documented procedures exist for determining this compound routinely. Since most environmental samples will usually contain other simple chlorinated hydrocarbons in concentrations far greater than that at which 1,2-dichloroethane occurs, the monitoring method must be capable of resolving 1,2-dichloroethane from its congeners. Several new methods to accomplish this goal are under development. One promising technique utilizes a single-ended laser radar to monitor atmospheric pollutants in situ (Murray, 1978); however, much developmental work remains to be done before seasoned instruments of this kind are available for routine use. The best current analytical technique for determining 1,2-dichloroethane is gas chromatography. However, high-resolution gas

chromatographs are laboratory instruments rather than field devices. It will thus be necessary to collect environmental samples containing 1,2-dichloroethane on a suitable substrate at the sample site and transport the collected sample to the laboratory for subsequent fractionation on a gas chromatograph. Except for isolated instances when contaminating halogenated hydrocarbons are absent, the 1,2-dichloroethane monitoring station for environmental air will thus probably consist of a portable pump drawing a standardized volume of air into the sample container or, if concentration is required, through a liquid or solid substrate that efficiently retains 1,2-dichloroethane. Tenax GC (Pellizzari, 1977, 1978) or charcoal (Larkin et al., 1977) are examples of solid-type sorbents that have been used for this purpose. However, no consensus currently exists with respect to sorbents or other procedural matters. Probably, the most effective analytical protocol remains to be established. Interlaboratory comparisons of environmental samples have not yet been undertaken, although such a program has been initiated with respect to occupational exposure samples (Larkin et al., 1977). The development of analytical procedures suitable for the analysis of 1,2-dichloroethane in both occupational and environmental samples will be facilitated by the recent release of Standard Reference Material 2664 (1,2-dichloroethane on charcoal) by the National Bureau of Standards (Manufacturing Chemists Association, 1978).

14. REGULATIONS AND STANDARDS

A variety of domestic and foreign regulations, standards, and practices control occupational and environmental use, exposure, and handling of 1,2-dichloroethane.

14.1 CURRENT REGULATIONS

14.1.1 Food, Drug, and Pesticide Authorities

Currently, 1,2-dichloroethane is approved for 11 food-related uses (Kennedy, 1978*a*). In 1956 the U.S. Secretary of Health, Education, and Welfare exempted 1,2-dichloroethane from the requirements of a tolerance for residues when used as a fumigant for barley, corn, oats, popcorn, rice, rye, sorghum (milo), and wheat. These agricultural commodities were expected to be freed of any residual fumigant by the cooking customarily performed before human consumption (*Federal Register*, 1956). In 1961 permissible residues of 1,2-dichloroethane in spice oleoresins intended for human consumption were limited to 30 ppm or less by the Federal Food, Drug, and Cosmetic Act (*Federal Register*, 1961).

1,2-Dichloroethane was approved as a fumigant for grain-mill machinery by the U.S. Commissioner of Food and Drugs in 1963. Use of 1,2-dichloroethane alone or in combination with carbon disulfide, carbon tetrachloride, or 1,2-dibromomethane was allowed (*Federal Register*, 1963). Later, mixtures of solvents consisting of carbon tetrachloride and either carbon disulfide or 1,2-dichloroethane, with or without pentane, were permitted as fumigants for corn grits and cracked rice used in the production of fermented malt beverages (*Federal Register*, 1964). No detectable residues of chlorinated hydrocarbons in the finished beverages were expected to result from this practice.

The use of 1,2-dichloroethane as an extracting solvent in the manufacture of animal feeds was approved under the Federal Food, Drug, and Cosmetic Act in 1967. The concentration of solvent in the processed animal feed was limited to 300 ppm (*Federal Register*, 1967). In 1969

the U.S. Commissioner of Food and Drugs approved the use of 1,2-dichloroethane as an adjuvant for pesticide dilutions prior to application to the growing crop (*Federal Register*, 1969). In 1971 the Administrator of the U.S. Environmental Protection Agency exempted 1,2-dichloroethane from the requirement of a tolerance in or on raw agricultural commodities (*Federal Register*, 1971). No regulations governing the use of 1,2-dichloroethane in cosmetic or specialty applications were found.

14.1.2 Air and Water Acts

In January 1978 chlorinated ethanes, including 1,2-dichloroethane, were designated toxic pollutants in accordance with the provisions of the Federal Water Pollution Control Act as amended by the Clean Water Act of 1977 (*Federal Register*, 1978). Toxic pollutant effluent standards have not yet been issued for these substances. Regulation of 1,2-dichloroethane under the Clean Air Act is being considered.

14.1.3 Occupational Safety and Health Regulations

Current regulations of the Occupational Safety and Health Administration limit 1,2-dichloroethane exposures of employees to those specified in the American National Standards Institute air standard Z37.12-1969 (*Federal Register*, 1974). This regulation imposes an 8-hr time-weighted average of 50 ppm and a ceiling concentration of 100 ppm, but a maximum peak concentration of 200 ppm is permitted for 5 min during any 3 hr of an 8-hr shift.

More recently, the National Institute for Occupational Safety and Health recommended a reduction in permissible occupational exposures to 1,2-dichloroethane (National Institute for Occupational Safety and Health, 1976). The proposed new standard limits worker exposure to 5 ppm, determined as a 10-hr time-weighted average, and to a peak concentration of 15 ppm in any 15-min work period. The proposed standard also restricts nursing mothers from working with 1,2-dichloroethane. Currently, the National Institute for Occupational Safety and Health is revising its 1976 recommendation to address the carcinogenic potential of 1,2-dichloroethane

in the workplace (National Institute for Occupational Safety and Health, 1978). None of these proposed changes have yet been implemented.

14.1.4 U.S. Department of Transportation

1,2-Dichloroethane is classified as a flammable liquid by the U.S. Department of Transportation (DOT). Unless exempted, the compound must be packed in DOT-approved containers when shipped by rail, water, or highway. All DOT regulations regarding loading, handling, and labeling must also be followed (*Federal Register*, 1976; Manufacturing Chemists Association, 1971).

14.1.5 Foreign Countries

The literature contains conflicting reports of standards for 1,2-dichloroethane in foreign countries. For example, maximum allowable concentrations in the Soviet Union are cited as 1.0 mg/m^3 (average daily) and 3.0 mg/m^3 (maximum single) in one publication (Nikolaeva, 1964), as 12.5 ppm (50 mg/m^3) by Bardodej (1969, as cited in National Institute for Occupational Safety and Health, 1976), and as 2.5 ppm (10 mg/m^3) by Roschin and Timofeevskaya (1975) and Verschueren (1977). The different values apparently reflect confusion over concentration units (1 ppm = 4.05 mg/m^3) or, perhaps, revised values of the standard.

The maximum allowable concentration of 1,2-dichloroethane in other foreign countries also varies appreciably. According to Bardodej (1969, as cited in National Institute for Occupational Safety and Health, 1976), the values are 5 ppm in Hungary, 12.5 ppm in Poland, 12.5 ppm in the German Democratic Republic, 50 ppm in Great Britain, 100 ppm in the Federal Republic of Germany, and 100 ppm in Yugoslavia. Other maximum allowable concentrations reported are 2.5 ppm in Bulgaria, 100 ppm in Finland (8-hr continuous), 12.5 ppm in Rumania, and 50 ppm in Yugoslavia (Joint AIHA-ACGIH Respiratory Protective Devices Committee, 1963).

14.2 CONSENSUS AND SIMILAR STANDARDS

The American Conference of Governmental Industrial Hygienists and the American National Standards Institute have both published recommendations for occupational exposure to toxic substances, including 1,2-dichloroethane.

14.2.1 American Conference of Governmental Industrial Hygienists

In 1942 the maximum allowable concentration of 1,2-dichloroethane in industrial atmospheres was set at 100 ppm by the Subcommittee on Threshold Limits of the National Conference of Governmental Industrial Hygienists. Five years later the subcommittee, now part of the American Conference of Governmental Industrial Hygienists, renamed the standard *threshold limit value* (TLV) and lowered the acceptable concentration to 75 ppm. For a decade, beginning in 1952, the TLV was set at 100 ppm, but in 1962 it was reduced to the present level of 50 ppm. The 1942 value of 100 ppm was based on existing regulations in California, Colorado, Kansas, Massachusetts, Michigan, Oklahoma, and Wisconsin. The subcommittee cited no justification for changes in the TLV until 1962 when the experimental animal studies of Spencer et al. (1951) provided support for the 100 ppm assignment. Evidence from the works of Wirtschafter and Schwartz (1939), McNally and Fostvedt (1941), and Heppel et al. (1946) was used to document the subsequent reduction of the 1,2-dichloroethane TLV to 50 ppm.

14.2.2 American National Standards Institute

In 1969 Subcommittee Z-37 of the American National Standards Institute (ANSI) recommended limiting occupational exposure of 1,2-dichloroethane to an 8-hr time-weighted average of 50 ppm and a ceiling concentration of 100 ppm. A maximum peak concentration of 200 ppm was also permitted, provided it occurred no longer than 5 min in any 3-hr interval. The subcommittee based these recommendations in part on the animal experiments of Heppel et al. (1946) and Spencer et al. (1951). In 1974 the ANSI air standard Z37.12-1969 was adopted by the Occupational

Safety and Health Administration as a federal standard (*Federal Register*, 1974).

14.3 CURRENT HANDLING PRACTICES

Special procedures are required to safely handle, use, transport, and store 1,2-dichloroethane.

14.3.1 Handling, Use, Transport, and Storage

Pure, uninhibited 1,2-dichloroethane decomposes slowly, darkening in color and increasing in acidity (Sect. 2.3). The resulting corrosion products attack iron; consequently, containers for the transportation and storage of unstabilized 1,2-dichloroethane should be plain, galvanized or lead-lined, mild steel (National Institute for Occupational Safety and Health, 1976). Commercial grade 1,2-dichloroethane contains about 0.1% by weight of alkylamines which stabilize the product against decomposition and permit the use of unlined iron or steel containers for indefinite periods. However, strong ultraviolet light, air, and moisture and contact with open flames or hot surfaces cause even stabilized 1,2-dichloroethane to decompose rapidly with evolution of phosgene, hydrogen chloride, carbon monoxide, and other toxic substances. For this reason, 1,2-dichloroethane should be stored in cool, dry, well-ventilated areas away from direct sunlight (Hoyle, 1961; Manufacturing Chemists Association, 1971).

Equipment for loading and unloading transport vehicles should be constructed of materials resistant to 1,2-dichloroethane (rubber is not suitable) and should be inspected before and periodically during operation. Personal protective clothing is needed during both inspection and operation of the transfer equipment.

Because of the toxicity of 1,2-dichloroethane, operations in which it is used in large quantities should be conducted in closed systems with well-designed hoods and ventilation systems used to maintain exposures at or below acceptable concentration levels. Equipment contaminated with 1,2-dichloroethane must be thoroughly cleaned, preferably

by steam, and rinsed with water before entry or disassembly. Pipelines should be disconnected and capped. Impervious protective suits with supplied or self-contained air ventilation must be used by maintenance personnel who come in contact with equipment contaminated with 1,2-dichloroethane. Such personnel should be constantly observed so that rescue operations can begin promptly if necessary.

Because 1,2-dichloroethane is flammable, standard fire-prevention precautions, such as eliminating ignition sources, grounding transfer containers, inerting, bonding, and general observance of National Fire Codes, should be practiced when handling the product. Only explosion-proof motors, switches, and controls should be used if 1,2-dichloroethane vapors are present during normal operation, but Class I, Group D, Division II electrical equipment (National Electrical Code, Article 500) is permissible if 1,2-dichloroethane vapors are normally absent (Manufacturing Chemists Association, 1971). Numerous other details for safe handling and use of 1,2-dichloroethane are discussed in the Manufacturing Chemists Association brochure (1971).

14.3.2 Spills and Leakage

Spills and leakage of 1,2-dichloroethane may be expected despite normal precautions; therefore, provisions should be made in advance to contain the spilled liquid. Floors of storage rooms should be pitched to drains that lead to a safe location. Drains should be equipped with adequate traps. If drains are not used, curbs should be provided at door openings. Areas susceptible to major spills should be constructed so that they can be closed until properly protected personnel can ventilate and clear the site. Some 1,2-dichloroethane or vinyl chloride manufacturing plants are constructed entirely out-of-doors (Barnhart, Toney, and Devlin, 1975; Jones and Bierbaum, 1974); outside storage areas should also be surrounded by a dike with sufficient capacity to retain the stored volume of 1,2-dichloroethane (Manufacturing Chemists Association, 1971; National Institute for Occupational Safety and Health, 1976).

14.3.3 Respiratory Protection

Various types of respiratory equipment are required for adequate protection from 1,2-dichloroethane under different conditions of exposure. A list of respirators approved by the National Institute for Occupational Safety and Health is available from the Testing and Certification Laboratory, National Institute for Occupational Safety and Health, Morgantown, West Virginia 26505. Similar data from the U.S. Bureau of Mines are available in Information Circular 8559 and supplements. Pertinent aspects of respirator selection and use have also been discussed by the American National Standards Institute (1969) and the Joint AIHA-ACGIH Respiratory Protective Devices Committee (1963).

Although many users may be protected at considerably higher levels of concentration, the National Institute for Occupational Safety and Health recommends restricting the use of half-mask or quarter-mask respirators, which are operated with negative pressure, to atmospheric concentrations of 1,2-dichloroethane not greater than ten times the permissible time-weighted average. Similarly, it is recommended that use of full-facepiece respirators operated with negative pressure be limited to concentrations of 1,2-dichloroethane not exceeding 50 times the permissible time-weighted average.

The safe use of air-purifying respirators also requires consideration of the service life of the associated filter or absorbent canister. When used in an atmosphere contaminated with 1000 ppm 1,2-dichloroethane, the standard organic vapor cartridge has a service life of 54 min before a breakthrough of 10 ppm of 1,2-dichloroethane occurs. Under the same conditions, the standard industrial-size gas mask canister has an estimated service life of about 160 min (Nelson and Harder, 1974).

14.3.4 Accidents

If a tank truck carrying 1,2-dichloroethane is damaged in transit so that it cannot proceed safely to its destination, the Manfacturing Chemists Association (1971) recommends parking the vehicle in an area as isolated as possible, then notifying the local fire and police departments. If necessary, safe disposal instructions should be obtained from the manufacturer. The public should be warned to stay away.

APPENDIX

Pesticide products containing 1,2-dichloroethane[a]

Pesticide product name	Active ingredients		Product toxicity rating[b]
	Component	Concentration (%)	
Products containing one active ingredient			
Destruxol Borer-Sol	1,2-Dichloroethane	50.0	3
Ferti-Lome Tree Borer Killer	1,2-Dichloroethane	50.0	3
Hacienda Borer Solution	1,2-Dichloroethane	50.0	3
Navlet's Borer Solution	1,2-Dichloroethane	50.0	3
Staffel's Boraway	1,2-Dichloroethane	50.0	3
Products containing two active ingredients			
Best 4 Servis Brand 75-25 Standard Fumigant	1,2-Dichloroethane Carbon tetrachloride	70.3 29.7	3
Big F "LGF" Liquid Gas Fumigant	1,2-Dichloroethane Carbon tetrachloride	75.0 25.0	1
Brayton Flour Equipment Fumigant for Bakeries	1,2-Dichloroethane Carbon tetrachloride	70.2 29.8	1
Brayton 75-25 Grain Fumigant	1,2-Dichloroethane Carbon tetrachloride	70.2 29.8	1
Bug Devil Fumigant	1,2-Dichloroethane Carbon tetrachloride	70.3 29.7	2
Cardinalfume	1,2-Dichloroethane Carbon tetrachloride	70.2 29.8	1
Chemform Brand Bore-Kill	1,2-Dichloroethane Propylene dichloride	35.0 15.0	2
Cooke Kill-Bore	1,2-Dichloroethane Lindane	50.0 1.0	2
De-Pester Fumigant No. 1	1,2-Dichloroethane Carbon tetrachloride	70.2 29.8	1
Diamond 75-25 Grain Fumigant	1,2-Dichloroethane Carbon tetrachloride	70.2 29.8	2
Diweevil	1,2-Dichloroethane Carbon tetrachloride	70.0 30.0	1
Dowfume 75	1,2-Dichloroethane Carbon tetrachloride	70.0 30.0	1
Excelcide Excelfume	1,2-Dichloroethane Carbon tetrachloride	70.0 30.0	1
Fume-O-Death Gas No. 3	1,2-Dichloroethane Carbon tetrachloride	70.0 30.0	2
Fumisol	1,2-Dichloroethane Carbon tetrachloride	70.3 29.7	1
Gas-O-Cide	1,2-Dichloroethane Carbon tetrachloride	70.3 29.7	1

Pesticide product name	Active ingredients		Product toxicity rating[b]
	Component	Concentration (%)	
Grain Fumigant	1,2-Dichloroethane Carbon tetrachloride	75.0 25.0	1
Hill's Hilcofume 75	1,2-Dichloroethane Carbon tetrachloride	70.2 29.8	2
Hydrochlor Fumigant	1,2-Dichloroethane Carbon tetrachloride	70.0 30.0	1
Hydrochlor GF Liquid Gas Fumigant	1,2-Dichloroethane Carbon tetrachloride	75.0 25.0	1
Infuco Fumigant 75	1,2-Dichloroethane Carbon tetrachloride	70.0 30.0	1
J-Fume 75	1,2-Dichloroethane Carbon tetrachloride	70.0 30.0	1
Koppersol	1,2-Dichloroethane Copper oleate	3.0 11.0	3
Maxkill 75-25	1,2-Dichloroethane Carbon tetrachloride	70.2 29.8	1
Pearson's Fumigrain P-75	1,2-Dichloroethane Carbon tetrachloride	67.5 32.5	1
Riverdale Fumigant	1,2-Dichloroethane Carbon tetrachloride	70.3 29.7	2
Selig's Selcofume	1,2-Dichloroethane Carbon tetrachloride	25.0 75.0	1
Spray-Trol Brand Insecticide Fumi-Trol	1,2-Dichloroethane Carbon tetrachloride	70.2 29.8	1
Standard 75-25 Fumigant	1,2-Dichloroethane Carbon tetrachloride	70.3 29.7	2
Stephenson Chemicals Stored Grain Fumigant	1,2-Dichloroethane Carbon tetrachloride	70.2 29.8	1
Vulcan Formula 72 Grain Fumigant	1,2-Dichloroethane Carbon tetrachloride	70.2 29.8	2
Westofume Fumigant	1,2-Dichloroethane Carbon tetrachloride	70.2 29.8	1
Zep-O-Fume Grain Mill Fumigant	1,2-Dichloroethane Carbon tetrachloride	70.2 29.8	1
Products containing three active ingredients			
Brayton EB-5 Grain Fumigant	1,2-Dichloroethane Carbon tetrachloride 1,2-Dibromoethane	29.2 63.6 7.2	1
Crest 15 Grain Fumigant	1,2-Dichloroethane Carbon tetrachloride 1,2-Dibromoethane	19.6 57.0 20.4	2

Pesticide product name	Active ingredient		Product toxicity rating[b]
	Component	Concentration (%)	
De-Pester Weevil Kill	1,2-Dichloroethane	29.2	1
	Carbon tetrachloride	63.6	
	1,2-Dibromoethane	7.2	
Dowfume EB-5 Effective Grain Fumigant	1,2-Dichloroethane	20.0	1
	Carbon tetrachloride	64.0	
	1,2-Dibromoethane	7.0	
Dowfume EB-15 Inhibited	1,2-Dichloroethane	20.0	1
	Carbon tetrachloride	57.0	
	1,2-Dibromoethane	20.0	
Dowfume EB-59	1,2-Dichloroethane	9.0	2
	Carbon tetrachloride	32.0	
	1,2-Dibromoethane	59.0	
Farmrite Mushroom Spray	1,2-Dichloroethane	75.0	2
	Malathion	22.5	
	Petroleum distillate	2.5	
FC-7 Grain Fumigant	1,2-Dichloroethane	64.7	2
	Carbon tetrachloride	27.4	
	1,2-Dibromoethane	7.9	
(FC-13) Mill Machinery Fumigant	1,2-Dichloroethane	19.6	2
	Carbon tetrachloride	59.9	
	1,2-Dibromoethane	20.5	
FC-13 Mill Machinery Fumigant	1,2-Dichloroethane	19.6	1
	Carbon tetrachloride	59.9	
	1,2-Dibromoethane	20.5	
Formula 635 (FC-2) Grain Fumigant	1,2-Dichloroethane	29.2	1
	Carbon tetrachloride	63.6	
	1,2-Dibromoethane	7.2	
Grainfume MB	1,2-Dichloroethane	29.2	2
	Carbon tetrachloride	63.6	
	1,2-Dibromoethane	7.2	
Infuco 50-50 Spot Fumigant	1,2-Dichloroethane	26.84	1
	Carbon tetrachloride	11.40	
	1,2-Dibromoethane	61.76	
J-Fume-20	1,2-Dichloroethane	20.0	1
	Carbon tetrachloride	57.0	
	1,2-Dibromoethane	20.0	
Leittle Spotfume 60	1,2-Dichloroethane	8.5	2
	Carbon tetrachloride	31.5	
	1,2-Dibromoethane	60.0	
Max Spot Kill Machinery Fumigant	1,2-Dichloroethane	20.0	2
	Carbon tetrachloride	57.0	
	1,2-Dibromoethane	20.0	
Okay Mole and Gopher Fumigant	1,2-Dichloroethane	30.0	3
	Carbon tetrachloride	50.0	
	Paradichlorobenzene	20.0	

Pesticide product name	Active ingredient		Product toxicity rating[b]
	Component	Concentration (%)	
Parson Lethogas Fumigant	1,2-Dichloroethane	73.5	1
	Carbon tetrachloride	24.5	
	1,2-Dibromoethane	2.0	
Solig's Grain Fumigant No. 15	1,2-Dichloroethane	19.6	2
	Carbon tetrachloride	57.0	
	1,2-Dibromoethane	20.4	
Spot Fumigant	1,2-Dichloroethane	19.6	1
	Carbon tetrachloride	59.9	
	1,2-Dibromoethane	20.5	
T-H Vault Fumigant	1,2-Dichloroethane	29.2	2
	Carbon tetrachloride	63.6	
	1,2-Dibromoethane	7.2	
Tri-X Garment Fumigant	1,2-Dichloroethane	30.0	1
	Carbon tetrachloride	65.0	
	1,2-Dibromoethane	5.0	
Vulcan Formula 635 (FC-2) Grain Fumigant	1,2-Dichloroethane	29.2	2
	Carbon tetrachloride	63.6	
	1,2-Dibromoethane	7.2	
Waco-50	1,2-Dichloroethane	9.0	1
	Carbon tetrachloride	32.0	
	1,2-Dibromoethane	59.0	
Products containing four active ingredients			
Agway Serafume	1,2-Dichloroethane	10.0	1
	Carbon disulfide	10.0	
	Carbon tetrachloride	76.5	
	1,2-Dibromoethane	3.5	
Coop New Activate Weevil Killer Fumigant	1,2-Dichloroethane	66.0	1
	Carbon tetrachloride	27.0	
	1,2-Dibromoethane	5.0	
	Sulfur dioxide	2.0	
De-Pester Grain Conditioner and Weevil Killer	1,2-Dichloroethane	64.6	1
	Carbon tetrachloride	27.4	
	1,2-Dibromoethane	5.0	
	Sulfur dioxide	3.0	
Dowfume F	1,2-Dichloroethane	65.0	1
	Carbon tetrachloride	27.0	
	1,2-Dibromoethane	5.0	
	Sulfur dioxide	3.0	
Dyna Fume	1,2-Dichloroethane	12.0	1
	Carbon tetrachloride	83.8	
	1,2-Dibromoethane	1.2	
	Sulfur dioxide	3.0	
(FC-4) SX Grain Storage Fumigant	1,2-Dichloroethane	64.6	2
	Carbon tetrachloride	27.4	
	1,2-Dibromoethane	5.0	
	Sulfur dioxide	3.0	

Pesticide product name	Active ingredients		Product toxicity rating[b]
	Component	Concentration (%)	
Formula MU-39[c]	1,2-Dichloroethane	10.00	2
	Malathion	23.75	
	Petroleum distillate	50.00	
	Xylene	15.00	
Iso-Fume	1,2-Dichloroethane	11.4	1
	Carbon tetrachloride	80.6	
	1,2-Dibromoethane	5.0	
	Sulfur dioxide	3.0	
Max Kill Spot-59 Fumigant for Mills and Milling Machinery	1,2-Dichloroethane	10.0	1
	Carbon disulfide	1.5	
	Carbon tetrachloride	29.5	
	1,2-Dibromoethane	59.0	
Patterson's Weevil Killer	1,2-Dichloroethane	63.1	2
	Carbon tetrachloride	26.9	
	1,2-Dibromoethane	7.1	
	Sulfur dioxide	2.9	
Pioneer Brand Grain Fumigant	1,2-Dichloroethane	66.0	1
	Carbon tetrachloride	27.0	
	1,2-Dibromoethane	5.0	
	Sulfur dioxide	2.0	
Selig's Grain Storage Fumigant	1,2-Dichloroethane	64.6	2
	Carbon tetrachloride	27.4	
	1,2-Dibromoethane	5.0	
	Sulfur dioxide	3.0	
Serfume	1,2-Dichloroethane	10.0	1
	Carbon disulfide	10.0	
	Carbon tetrachloride	76.5	
	1,2-Dibromoethane	3.5	
Sure Death Brand Millfume No. 2	1,2-Dichloroethane	64.6	2
	Carbon tetrachloride	27.4	
	1,2-Dibromoethane	5.0	
	Sulfur dioxide	3.0	
T&C Fruit and Vegetable Insecticide and Miticide[d]	1,2-Dichloroethane	28.0	2
	Aromatic petroleum derivative solvent	28.0	
	Methyl azinphos	5.0	
	Petroleum distillate	28.0	
T-H Grain Fumigant No. 7 Weevil Killer and Grain Conditioner	1,2-Dichloroethane	63.1	1
	Carbon tetrachloride	26.9	
	1,2-Dibromoethane	7.1	
	Sulfur dioxide	2.9	
914 Weevil Killer and Grain Conditioner	1,2-Dichloroethane	63.1	1
	Carbon tetrachloride	26.9	
	1,2-Dibromoethane	7.1	
	Sulfur dioxide	2.9	

Pesticide product name	Active ingredient		Product toxicity rating[b]
	Component	Concentration (%)	
Products containing five active ingredients			
Cooke Bug Shot Lawn Special Spray Concentrate[d]	1,2-Dichloroethane	20.0	2
	Cyclohexanone	4.0	
	Lindane	4.0	
	Petroleum distillate	24.0	
	Toxaphene	40.0	
49'er Gold Strike Bonanza Plant Spray[e]	1,2-Dichloroethane	10.25	3
	Copper oleate	15.25	
	Cube resins other than rotenone	2.00	
	Pyrethrins	0.50	
	Rotenone	1.00	
Old Scratch Concentrated Rotenone-Malathion	1,2-Dichloroethane	11.75	1
	Cube resins other than rotenone	3.75	
	Malathion	42.00	
	Pine oil	40.00	
	Rotenone	2.50	
Sirotta's Sircofume Liquid Fumigating Gas	1,2-Dichloroethane	1.0	3
	Carbon tetrachloride	96.0	
	Tetrachloroethylene	1.0	
	1,1,1-Trichloroethane	1.0	
	Trichloroethylene	1.0	
Products containing seven active ingredients			
KLX[d]	1,2-Dichloroethane	10.25	4
	Copper oleate	15.25	
	Cottonseed oil	35.25	
	Cube resins other than rotenone	2.00	
	Ethylene glycol	26.50	
	Pyrethrins	0.50	
	Rotenone	1.00	

[a]Unless otherwise indicated, the pesticide is an insecticide or miticide that is applied without dilution as a liquid fumigant.

[b]Toxicity scale is relative and is based on acute toxicity; 1 represents the highest level of toxicity.

[c]Spray in oil, use undiluted, not pressurized.

[d]Concentrate or emulsifiable.

[e]Concentrate, solution.

Source: Adapted from Fry, 1978.

BIBLIOGRAPHY

Adkisson, P. L. 1957. The Relative Susceptibility of the Life History Stages of the Rice Weevil to Certain Fumigants. J. Econ. Entomol. 50(6):761-764.

Albert, R. 1978. The Carcinogen Assessment Group's Preliminary Report on Ethylene Dichloride (EDC). U.S. Environmental Protection Agency, Washington, D.C. (unpublished). 34 pp.

Alleweldt, G. 1960. Breaking the Dormancy of Grape Buds with Rindite (English summary). Experientia 16:153-154.

Alumot, E., M. Meidler, P. Holstein, and M. Herzberg. 1976. Tolerance and Acceptable Daily Intake of Ethylene Dichloride in the Chicken Diet. Food Cosmet. Toxicol. 14:111-114.

Alumot, E., E. Nachtomi, E. Mandel, P. Holstein, A. Bondi, and M. Herzberg. 1976. Tolerance and Acceptable Daily Intake of Chlorinated Fumigants in the Rat Diet. Food Cosmet. Toxicol. 14(2):105-110.

Ambrose, A. M. 1950. Toxicological Studies of Compounds Investigated for Use as Inhibitors of Biological Processes: II. Toxicity of Ethylene Chlorohydrin. Arch. Ind. Hyg. Occup. Med. 2:591-597.

American Industrial Hygiene Association. 1965. Halogenated Hydrocarbons. American Industrial Hygiene Association Analytical Guides. Detroit, Mich.

American National Standards Institute, Inc. 1969. American National Standard Practices for Respiratory Protection. ANSI Z88.2-1969. New York. 31 pp.

American Public Health Association. 1975. Population Residing near Plants Producing Vinyl Chloride. U.S. Environmental Protection Agency, Washington, D.C. (unpublished).

Ames, B. N., and C. Yanofsky. 1971. The Detection of Chemical Mutagens with Enteric Bacteria. In: Chemical Mutagens: Principles and Methods for Their Detection, Vol. 1, A. Hollaender, ed. Plenum Press, New York. pp. 267-282.

Association of the American Pesticide Control Officials, Inc. 1966. Pesticide Chemicals Official Compendium. Topeka, Kans. pp. 500-501.

Auerbach Associates, Inc. 1978*a*. Miscellaneous and Small Volume Consumption of Ethylene Dichloride. U.S. Environmental Protection Agency, Washington, D.C. (unpublished). 7 pp.

Auerbach Associates, Inc. 1978*b*. The Transcat Process for the Production of Vinyl Chloride. U.S. Environmental Protection Agency, Washington, D.C. (unpublished). 3 pp.

Bang, Y. H., and H. S. Telford. 1966. Effect of Sublethal Doses of Fumigants on Stored-Grain Insects. Wash. Agric. Exp. St. Tech. Bull. 50. 22 pp.

Barnhart, W. L., C. R. Toney, and J. B. Devlin. 1975. Environmental/Industrial Hygiene Surveys of Vinyl Chloride Monomer Manufacturing Operations and Operations Where Polyvinyl Chloride and Copolymers of Polyvinyl Chloride Are Processed. U.S. Department of Health, Education, and Welfare, Washington, D.C. (unpublished). 30 pp.

Bellamy, R. G., and W. A. Schwartz. 1975. Engineering and Cost Study of Air Pollution Control for the Petrochemical Industry, Vol. 8, Vinyl Chloride Manufacture by the Balanced Process. EPA-450/3-73-006-h. U.S. Environmental Protection Agency, Research Triangle Park, N.C. 61 pp.

Berck, B. 1965. Sorption of Ethylene Dibromide, Ethylene Dichloride, and Carbon Tetrachloride by Cereal Products. J. Agric. Food Chem. 13(3):248-254.

Berck, B. 1974. Fumigant Residues of Carbon Tetrachloride, Ethylene Dichloride, and Ethylene Dibromide in Wheat, Flour, Bran, Middlings, and Bread. J. Agric. Food Chem. 22(6):977-984.

Berry, S. Z. 1958. Effects of an Ethylene Dichloride and Trichlorethane Mixture on Three Citrus Fruit Pathogens. Plant Dis. Rep. 42(1):102-106.

Bhatia, S., and P. Bansode. 1971. Studies on Resistance to Insecticides in *Tribolium castaneum* (Herbst): IV. Susceptibility of P,P'DDT-Resistant Strain to Some Fumigants. Indian J. Entomol. 33(1):45-49.

Bhatia, S., and G. Tonapi. 1975. Effect of Ethylene Dichloride and Carbon Tetrachloride (EDCT) Fumigation on the Larval *Corcyra cephalonica* (H.) Sci. Cult. 41(7):332-334.

Bond, E. J. 1961. The Action of Fumigants on Insects: II. The Effect of Hydrogen Cyanide on the Activity and Respiration of Certain Insects. Can. J. Zool. 39(4):437-444.

Bond, E. J., and H.A.U. Monro. 1961. The Toxicity of Various Fumigants to the Cadelle, *Tenebroides mauritanicus*. J. Econ. Entomol. 54(3): 451-454.

Borisova, M. K. 1960. Materials for the Determination of Allowable Concentrations of Dichloroethane in Atmospheric Air. Predel'no Dopustimye Konts. Atmos. Zagryaz. 4:49-59.

Bray, H. G., W. V. Thorpe, and D. K. Vallance. 1952. The Liberation of Chloride Ions from Organic Chloro Compounds by Tissue Extracts. Biochem. J. 51:193-201.

Brem, H., A. B. Stein, and H. S. Rosenkranz. 1974. The Mutagenicity and DNA-Modifying Effect of Haloalkanes. Cancer Res. 34:2576-2579.

Bringmann, G. 1975. Bestimmung der biologischen Schadwirkung Wassergefährdender Stoffe aus der Hemmung der Zellvermehrung der Brauaige *Microcystis* (Determination of the Biologically Harmful Effect of Water Pollutants by Means of the Inhibition of Cell Proliferation of the Blue Alga *Microcystis*). Gesund. Ing. 96(9):238-241.

Bringmann, G., and R. Kühn. 1976. Vergleichende Befunde der Schadwirkung Wassergefährdender Stoffe gegen Bakterien (*Pseudomonas putida*) und Blaualgen (*Microcystis aeruginosa*) [Comparative Results of the Damaging Effects of Water Pollutants against Bacteria (*Pseudomonas putida*) and Blue Alga (*Microcystis aeruginosa*)]. Gas. Wasserfach, Wasser-Abwasser 117(9):410-413.

Browning, E. 1953. *sym*.-Dichloroethane. In: Toxicity of Industrial Organic Solvents. Chemical Publishing Co., Inc., New York. pp. 149-153.

Budanova, L. F. 1965. On the Clinical Picture Specific to Acute Peroral Dichloroethane Poisoning (English summary). Ter. Arkh. 37(3):110-112.

Caswell, G. H., and H. T. Clifford. 1958. The Effect of Ethylene Dichloride and Carbon Tetrachloride on the Germination and Early Growth of Maize. Emp. J. Exp. Agric. 26(104):365-372.

Cetnarowicz, J. 1959. Experimental and Clinical Studies on Effects of Dichloroethane (English summary). Folia Med. Cracov. 1:169-192.

Chemical Marketing Reporter. 1977*a*. Profile: Ethylene Dichloride. 212(3):9.

Chemical Marketing Reporter. 1977*b*. Current Prices of Chemicals and Related Materials. 212(3):62.

Chemical Marketing Reporter. 1978. Current Prices of Chemicals and Related Matters. 214(3):42.

Chu, H. T., and T. K. Tsai. 1961. Studies on the Effect of Soil Fumigation to the Growth of Sugar Cane. Taiwan Sugar 8(2):13-21.

Claypool, L. L., and H. M. Vines. 1956. Commodity Tolerance Studies of Deciduous Fruits to Moist Heat and Fumigants. Hilgardia 24(12):297-355.

Cotant, C. A. 1978. Private communication to J. Kariya, Office of Toxic Substances, U.S. Environmental Protection Agency, Washington, D.C.

Cox, P. J., L. J. King, and D. V. Parke. 1976. The Binding of Trichlorofluoromethane and Other Haloalkanes to Cytochrome P-450 under Aerobic and Anaerobic Conditions. Xenobiotica 6(6):363-375.

Cropper, F. R., and S. Kaminsky. 1963. Determination of Toxic Organic Compounds in Admixture in the Atmosphere by Gas Chromatography. Anal. Chem. 35(6):735-743.

Dilling, W. L., N. B. Tefertiller, and G. J. Kallos. 1975. Evaporation Rates and Reactivities of Methylene Chloride, Chloroform, 1,1,1-Trichloroethane, Trichloroethylene, Tetrachloroethylene, and Other Chlorinated Compounds in Dilute Aqueous Solutions. Environ. Sci. Technol. 9:833-837.

Di Porto, A., and A. Padellaro. 1959. Fumigant Mixtures of Dichloroethane and Carbon Tetrachloride — Hazards and Prevention (English summary). Folia Med. (Naples) 42:276-287.

Divincenzo, G. D., and W. J. Krasavage. 1974. Serum Ornithine Carbamyl Transferase as a Liver Response Test for Exposure to Organic Solvents. Am. Ind. Hyg. Assoc. J. 35(1):21-29.

Duprat, P., L. Delsaut, and D. Gradski. 1976. Irritant Power of the Principal Aliphatic Chlorinated Solvents on Rabbit Skin and Ocular Mucosa (English summary). Eur. J. Toxicol. Environ. Hyg. 9(3):171-177.

Ehrenberg, L., S. Osterman-Golkar, D. Singh, and V. Lundquist. 1974. On the Reaction Kinetics and Mutagenic Activity of Methylating and β-Halogenoethylating Gasoline Additives. Radiat. Bot. 14:185-194.

Eimutis, E. C., and R. P. Quill. 1977. Source Assessment: Noncriteria Pollutant Emissions. EPA-600/2-77-107e. U.S. Environmental Protection Agency, Research Triangle Park, N.C. 99 pp.

Elkins, H. B., A. K. Hobby, and J. E. Fuller. 1937. The Determination of Atmospheric Contaminants: I. Organic Halogen Compounds. J. Ind. Hyg. Toxicol. 19:474-485.

Ellis, C. R., and F. O. Morrison. 1967. Small Chamber Tests of Ethylene Dibromide and Ethylene Dichloride on Adult Grain-Infesting Coleoptera. Can. J. Zool. 45:435-448.

Ewing, B. B., E.S.K. Chian, J. C. Cook, F. B. DeWalle, C. A. Evans, P. K. Hopke, J. H. Kim, J. C. Means, R. Milberg, E. G. Perkins, J. D. Sherwood, and W. H. Wadlin. 1977. Monitoring to Detect Previously Unrecognized Pollutants in Surface Waters. EPA-560/6-77-015. U.S. Environmental Protection Agency, Washington, D.C. 75 pp.

Fairchild, E. J., ed. 1977. Registry of Toxic Effects of Chemical Substances, Vol. II. U.S. Department of Health, Education, and Welfare, Cincinnati, Ohio. p. 388.

Faith, W. L., D. B. Keyes, and R. L. Clark. 1965*a*. Ethylene Dichloride. In: Industrial Chemicals, 3rd ed. John Wiley and Sons, New York. pp. 368-371.

Faith, W. L., D. B. Keyes, and R. L. Clark. 1965*b*. Vinyl Chloride. In: Industrial Chemicals, 3rd ed. John Wiley and Sons, New York. pp. 805-810.

Federal Register. 1956. Exemption from the Requirement of a Tolerance for Residues of Ethylene Dichloride. 21:5620.

Federal Register. 1961. Solvents in Spice Oleoresins. 26:2403.

Federal Register. 1963. Fumigants for Grain-Mill Machinery. 28:6916.

Federal Register. 1964. Fumigants for Processed Grains Used in Production of Fermented Malt Beverages. 29:7462.

Federal Register. 1967. Ethylene Dichloride. 32:2942.

Federal Register. 1969. Adjuvants for Pesticide Use Dilutions. 34(61):5930.

Federal Register. 1971. Exemption from the Requirements of a Tolerance. 36(228):22541-22542.

Federal Register. 1974. Air Contaminants. 39:23540-23543.

Federal Register. 1976. Consolidation of Hazardous Materials Regulations. 41(74):15972-15990.

Federal Register. 1978. Publication of Toxic Pollutant List. 43(21): 4108-4109.

Finnegan, R. J., and K. E. Stewart. 1962. Control of the Pine Root Collar Weevil, *Hylobius radicis*. J. Econ. Entomol. 55(4):483-486.

First, M. 1972. Air Sampling and Analysis for Contaminants in Work Places. In: Air Sampling Instruments for Evaluation of Atmospheric Contaminants, 4th ed. American Conference of Governmental Industrial Hygienists, Cincinnati, Ohio. p. A-8.

Fishbein, L. 1976. Industrial Mutagens and Potential Mutagens: I. Halogenated Aliphatic Derivatives. Mutat. Res. 32:267-308.

Food Chemical News. 1978. FDA Suggests Industry Lower Ethylene Dichloride Levels, Study Alternates. Food Chem. News 20(2):22.

Fry, E. 1978. Personal communication. Office of Pesticide Programs, U.S. Environmental Protection Agency, Washington, D.C.

Gradiski, D., J. L. Magadur, M. Baillot, M. C. Danière, and M. B. Schuh. 1974. Comparative Toxicity of the Main Aliphatic Chlorinated Solvents (English summary). J. Eur. Toxicol. 7(4):247-254.

Grimsrud, E. P., and R. A. Rasmussen. 1975. Survey and Analysis of Halocarbons in the Atmosphere by Gas Chromatography—Mass Spectrometry. Atmos. Environ. 9:1014-1017.

Gruber, G. I. 1976. Assessment of Industrial Hazardous Waste Practices, Organic Chemicals, Pesticides and Explosive Industries. Report No. 25666-6010-TU-00. TRW Systems and Energy, Redondo Beach, Calif. pp. 5-34 to 5-37.

Hagstrom, A., and S. Normark. 1974. Toxic Effects and Action of Chlorinated By-products from Vinyl Chloride Production on *Escherichia coli* K 12. Ambio 3(2):77-79.

Hanst, P. L. 1978. Noxious Trace Gases in the Air. Chemistry 51(2):6-12.

Hardie, D.W.F. 1964. Vinyl Chloride. In: Kirk-Othmer Encyclopedia of Chemical Technology, 2nd ed., Vol. 5. Interscience Publishers, New York. pp. 171-178.

Harris, E. S. 1972. Trace Contaminant Analysis of Enclosed Environment. In: Fate of Pesticides in Environment, Proceedings of the Second International IUPAC Congress of Pesticide Chemistry, Vol. VI, A. S. Tahori, ed. Gordon and Breach Science Publishers, New York. pp. 443-463.

Hawley, G. G., ed. 1977. The Condensed Chemical Dictionary, 9th ed. Van Nostrand Reinhold Co., New York. p. 358.

Hayes, W. J. 1975. General Principles: Dosage and Other Factors Influencing Toxicity. In: Toxicology of Pesticides. Williams and Wilkins Co., Baltimore. p. 62.

Hedley, W. H., S. M. Mehta, C. M. Moscowitz, R. B. Reznik, G. A. Richardson, and D. L. Zanders. 1975. Potential Pollutants from Petrochemical Processes. Technomic Publishing Co., Westport, Conn. pp. 193-195.

Heppel, L. A., P. A. Neal, K. M. Endicott, and V. T. Porterfield. 1944. Toxicology of Dichloroethane: I. Effect on the Cornea. Arch. Ophthalmol. 32:391-394.

Heppel, L. A., P. A. Neal, T. L. Perrin, K. M. Endicott, and V. T. Porterfield. 1945. The Toxicology of 1,2-Dichloroethane (Ethylene): III. Its Acute Toxicity and the Effect of Protective Agents. J. Pharmacol. Exp. Ther. 83:53-63.

Heppel, L. A., P. A. Neal, T. L. Perrin, K. M. Endicott, and V. T. Porterfield. 1946. The Toxicology of 1,2-Dichloroethane (Ethylene Dichloride): V. The Effects of Daily Inhalations. J. Ind. Hyg. Toxicol. 28:113-120.

Heppel, L. A., and V. T. Porterfield. 1948. Enzymatic Dehalogenation of Certain Brominated and Chlorinated Compounds. J. Biol. Chem. 176:763-769.

Hofmann, H. T., H. Birnstiel, and P. Jobst. 1971. On the Inhalation Toxicity of 1,1- and 1,2-Dichloroethane (English summary). Arch. Toxicol. 27:248-265.

Holmberg, B., I. Jakobson, and T. Malmfors. 1974. The Effect of Organic Solvents on Erythrocytes during Hypotonic Hemolysis. Environ. Res. 7:193-205.

Holmberg, B., and T. Malmfors. 1974. The Cytotoxicity of Some Organic Solvents. Environ. Res. 7:183-192.

Horvath, R. S. 1972. Microbial Co-metabolism and the Degradation of Organic Compounds in Nature. Bacteriol. Rev. 36(2):146-155.

Horwitz, W., ed. 1975. Fumigants. In: Official Methods of Analysis of the Association of Official Analytical Chemists. Association of Official Analytical Chemists, Washington, D.C. p. 91.

Hoyle, H. R. 1961. Control of Health Hazards during Application of Grain Fumigants. Pest Control 29(7):25-30.

Husain, S., and F. Ahmad. 1958. Standardization of Doses of Ethylene Dichloride and Carbon Tetrachloride (3:1) Mixture in Relation to Insect Resistance and Sorption Exhibited by Rice. Agric. Pak. 9:82-87.

Irish, D. D. 1963. Aliphatic Halogenated Hydrocarbons. In: Industrial Hygiene and Toxicology, 2nd ed., Vol. II, F. A. Patty, ed. Interscience Publishers, New York. pp. 1280-1284.

Izard, C., and H. Hitier. 1958. Effect of a Mixture of 1,3-Dichloropropane and 1,2-Dichloropropene, of Rindite, and of Gibberellin on the Germination of Seeds of Orobanche, a Parasite of Tobacco (English summary). C. R. Acad. Sci. 246:2659-2661.

Jacobs, M. B. 1941. The Analytical Chemistry of Industrial Poisons, Hazards and Solvents. Interscience Publishers, New York. p. 459.

Jensen, S., R. Lange, G. Berge, K. Palmork, and L. Renberg. 1975. On the Chemistry of EDC-tar and Its Biological Significance in the Sea. Proc. R. Soc. London Ser. B. 189:333-346.

Jernelov, A., R. Rosenberg, and S. Jensen. 1972. Biological Effects and Physical Properties in the Marine Environment of Aliphatic Chlorinated By-products from Vinyl Chloride Production. Water Res. 6:1181-1191.

Johns, R. 1976. Air Pollution Assessment of Ethylene Dichloride. MTR-7164. The MITRE Corporation, McLean, Va. 34 pp.

Johnson, M. K. 1965. The Influence of Some Aliphatic Compounds on Rat Liver Glutathione Levels. Biochem. Pharmacol. 14:1383-1385.

Johnson, M. K. 1966. Studies on Glutathione *S*-Alkyltransferase of the Rat. Biochem. J. 98:44-56.

Johnson, M. K. 1967. Metabolism of Chloroethanol in the Rat. Biochem. Pharmacol. 16:185-189.

Joint AIHA-ACGIH Respiratory Protective Devices Committee. 1963. Respiratory Protective Devices Manual. American Industrial Hygiene Association and American Conference of Governmental Industrial Hygienists. pp. 95-126.

Jolivet, E. 1968. Metabolism of Organic Acids and Free Amino-Acids from Potato Tubers following Induced Sprouting by "Rindite": I. Changes Induced Immediately following Treatment (English summary). Physiol. Veg. 6(3):221-223.

Jones, J. H., and P. J. Bierbaum. 1974. Walk-Through Survey, Ethyl Corporation, Pasadena, Texas. National Institute for Occupational Safety and Health, Cincinnati, Ohio (unpublished). 22 pp.

Kamel, A. 1959. The Effect of Carbon Bisulphide and Ethylene Dichloride—Carbon Tetrachloride Mixture on the Germination of Some Seeds of Certain Crops. Agric. Res. Rev. 37:330-350.

Kenaga, E. E. 1961. Time, Temperature and Dosage Relationships of Several Insecticidal Fumigants. J. Econ. Entomol. 54(3):537-542.

Kennedy, D. 1978*a*. Kennedy Says NCI's Data on Ethylene Dichloride Is Being Evaluated by FDA. Food Chem. News 19(47):60.

Kennedy, D. 1978*b*. Statement to the Subcommittee on Oversight and Investigations, Committee on Interstate and Foreign Commerce, U.S. House of Representatives, Washington, D.C.

Khramova, S. I., and B. Zhirnov. 1973. The Dynamics of the Content of Chloroorganic Solvents in Plants Irrigated with Industrial Effluents (English summary). Gig. Sanit. 38(1):102-103.

Khubutiya, V. A. 1964. Hematological Changes in Those Working with Dichloroethane (synopsis). Hyg. Sanit. (USSR) 29:125-126.

Kirichek, Y. F. 1974. Effect of 1,2-Dichloroethane on Mutations in Peas (abstract). Usp. Khim. Mutageneza Sel. 1974:232-235.

Kohn-abrest, V. 1934. Recherche Toxicologique Rapid des Alkylhalogenes (Chloroforme Tetrachlorure de Carbone, etc.). Application a la Detection de ces Produits dans l'Air. C. R. Acad. Sci. 199:237-239.

Kristoffersson, U. 1974. Genetic Effects of Some Gasoline Additives (abstract). Hereditas 78(2):319.

Krohne, H. E., and D. L. Lindgren. 1958. Susceptibility of Life Stages of *Sitophilus oryza* to Various Fumigants. J. Econ. Entomol. 51(2): 157-158.

Kulkarni, J. H., J. S. Sardeshpande, and D. J. Bagyaraj. 1975. Effect of Seed Fumigation on the Symbiosis of *Rhizobium* sp. with *Arachis hypogaea* Linn. Zentralbl. Bakteriol. Parasitenkd. Infektionskr. Hyg. Abt. 2 130(1):41-44.

Kulshrestha, D. C., and E. H. Marth. 1970. Growth and Activity of *Streptococcus cremoris* in Skim Milk Fortified with Some Volatile Compounds. J. Milk Food Technol. 33(11):492-496.

Kulshrestha, D. C., and E. H. Marth. 1974*a*. Inhibition of Bacteria by Some Volatile and Nonvolatile Compounds Associated with Milk: I. *Escherichia coli*. J. Milk Food Technol. 37(10):510-516.

Kulshrestha, D. C., and E. H. Marth. 1974*b*. Inhibition of Bacteria by Some Volatile and Nonvolatile Compounds Associated with Milk: II. *Salmonella typhimurium*. J. Milk Food Technol. 37(11):539-544.

Kulshrestha, D. C., and E. H. Marth. 1974*c*. Inhibition of Bacteria by Some Volatile and Nonvolatile Compounds Associated with Milk: III. *Staphylococcus aureus*. J. Milk Food Technol. 37(11):545-550.

Kulshrestha, D. C., and E. H. Marth. 1974*d*. Inhibition of Bacteria by Some Volatile and Nonvolatile Compounds Associated with Milk: IV. *Streptococcus lactis*. J. Milk Food Technol. 37(12):593-599.

Kulshrestha, D. C., and E. H. Marth. 1974*e*. Inhibition of Bacteria by Some Volatile and Nonvolatile Compounds Associated with Milk: V. *Leuconostoc citrovorum*. J. Milk Food Technol. 37(12):600-605.

Kulshrestha, D. C., and E. H. Marth. 1974*f*. Inhibition of Bacteria by Some Volatile and Nonvolatile Compounds Associated with Milk: VI. *Streptococcus thermophilus*. J. Milk Food Technol. 37(12):606-611.

Kuwabara, T., A. Quevedo, and D. Cogan. 1968. An Experimental Study of Dichloroethane Poisoning. Arch. Ophthalmol. 79(3):321-330.

Larkin, R. L., J. V. Crable, L. R. Catlett, and M. J. Seymour. 1977. Collaborative Testing of a Gas Chromatographic Charcoal Tube Method for Seven Organic Solvents. Am. Ind. Hyg. Assoc. J. 38(10):543-553.

Leithe, W. 1970. Analysis of Organic Air Pollutants. In: The Analysis of Air Pollutants, R. Kondor, trans. Ann Arbor—Humphrey Science Publishers, Ann Arbor, Mich. pp. 226-262.

Levadie, B., and J. F. Harwood. 1960. An Application of Gas Chromatography to Analysis of Solvent Vapors in Industrial Air. Am. Ind. Hyg. Assoc. J. 21:20-24.

Lindgren, D. L., W. B. Sinclair, and L. E. Vincent. 1968. Residues in Raw and Processed Foods Resulting from Post-harvest Insecticidal Treatments. Residue Rev. 21:1-222.

Lindgren, D. L., L. E. Vincent, and H. E. Krohne. 1954. Relative Effectiveness of Ten Fumigants to Adults of Eight Species of Stored-Product Insects. J. Econ. Entomol. 47:923-926.

Lioia, N., and O. Elmino. 1959. Toxicity of 1,2-Dichloroethane: I. Behavior of the Formed Elements of the Blood and Marrow (English summary). Folia Med. (Naples) 42:1238-1254.

Lioia, N., O. Elmino, and A. Rossi. 1959. Toxicity of 1,2-Dichloroethane: II. Research of Cytochemistry of the Blood (English summary). Folia Med. (Naples) 42:1400-1408.

Lovelock, J. E. 1977. Halogenated Hydrocarbons in the Atmosphere. Ecotoxicol. Environ. Saf. 1:399-406.

Lowenheim, F. A., and M. K. Moran. 1975. Ethylene Dichloride. In: Faith, Keyes, and Clark's Industrial Chemicals, 4th ed. John Wiley and Sons, New York. pp. 392-396.

Luzhnikov, E. A., L. I. Petrova, A. S. Savina, A. G. Kostomarova, K. K. Illiyashenko, and O. M. Shekhaeva. 1976. Exotoxic Shock (English summary). Sov. Med. 9:19-24.

Malinskaya, N. M., and B. I. Yanovskaya. 1957. Effect of Dichloroethane on Vitamin C Metabolism. Biul. Eksp. Biol. Med. 44(9):74-77.

Malone, B. 1971. Analytical Methods for the Determination of Fumigants. Residue Rev. 38:21-80.

Manufacturing Chemists Association. 1971. Properties and Essential Information for Safe Handling and Use of Ethylene Dichloride. Chemical Safety Data Sheet SD-18. Washington, D.C. 9 pp.

Manufacturing Chemists Association. 1978. NBS Issues New SRMs. Chemecology March:6.

Mara, S. J., and S. S. Lee. 1978. Atmospheric Ethylene Dibromide: A Source-Specific Assessment. Center for Research and Environmental Systems Studies Report No. 39. SRI International, Menlo Park, Calif. 78 pp.

McCann, J., E. Choi, E. Yamasaki, and B. N. Ames. 1975. Detection of Carcinogens as Mutagenic in the *Salmonella*/Microsome Test: Assay of 300 Chemicals. Proc. Natl. Acad. Sci. USA 72(2):5135-5139.

McCann, J., V. Simmon, D. Streitwieser, and B. N. Ames. 1975. Mutagenicity of Chloroacetaldehyde, a Possible Metabolic Product of 1,2-Dichloroethane (Ethylene Dichloride), Chloroethanol (Ethylene Chlorohydrin), Vinyl Chloride, and Cyclophosphamide. Proc. Natl. Acad. Sci. USA 72(8):3190-3193.

McConnell, G., D. M. Ferguson, and C. R. Pearson. 1975. Chlorinated Hydrocarbons and the Environment. Endeavour 34:13-18.

McGaughey, W. H. 1975. Compatibility of *Bacillus thuringiensis* and Granulosis Virus Treatments of Stored Grain with Four Grain Fumigants. J. Invertebr. Pathol. 26:247-250.

McNally, W. D., and G. Fostvedt. 1941. Ethylene Dichloride — Poisoning. Ind. Med. 10:373-374.

Mello, W. 1978. National Organics Monitoring Survey March 1976 through January 1977. U.S. Environmental Protection Agency, Washington, D.C. 126 pp.

Menschick, H. 1971. Dichloroethanes. In: Encyclopedia of Occupational Health and Safety, Vol. I. McGraw-Hill Book Co., New York. pp. 385-386.

Mitten, M. E., K. S. Dress, W. G. Krochta, F. P. Ewald, and B. J. De Witt. 1970. Chlorocarbons. In: Encyclopedia of Industrial Chemical Analysis, Vol. 9, F. D. Snell and L. S. Ettre, eds. Interscience Publishers, New York. pp. 437-510.

Morrison, A. B., and I. C. Munro. 1965. Factors Influencing the Nutritional Value of Fish Flour: IV. Reaction between 1,2-Dichloroethane and Protein. Can. J. Biochem. 43:33-40.

Munsey, V. E., P. A. Mills, and A. K. Klein. 1957. Effect of Cooking on Fumigant Residues. J. Assoc. Off. Anal. Chem. 40(1):201-202.

Murray, E. R. 1978. Remote Measurement of Gases Using Discretely Tunable Infrared Lasers. Opt. Eng. 16:284-290.

Nardella, J. 1974. Development Document for Effluent Limitations Guidelines and New Source Performance Standards for the Major Organic Products Segment of the Organic Chemicals Manufacturing Point Source Category. EPA-440/1-74-009-a. U.S. Environmental Protection Agency, Washington, D.C. 363 pp.

National Cancer Institute. 1978. Bioassay of 1,2-Dichloroethane for Possible Carcinogenicity. Publication No. (NIH) 78-1361. U.S. Department of Health, Education, and Welfare, Washington, D.C.

National Institute for Occupational Safety and Health. 1974. Organic Solvents in Air. In: NIOSH Manual of Analytical Methods. U.S. Department of Health, Education, and Welfare, Washington, D.C. pp. 127-1 to 127-11.

National Institute for Occupational Safety and Health. 1976. Occupational Exposure to Ethylene Dichloride (1,2-Dichloroethane). U.S. Department of Health, Education, and Welfare, Washington, D.C. 157 pp.

National Institute for Occupational Safety and Health. 1978. Current Intelligence Bulletin No. 25: Ethylene Dichloride (1,2-Dichloroethane). U.S. Department of Health, Education, and Welfare, Cincinnati, Ohio. 9 pp.

Nelson, G. O., and C. A. Harder. 1974. Respirator Cartridge Efficiency Studies: V. Effect of Solvent Vapor. Am. Ind. Hyg. Assoc. J. 35:391-410.

Nikolaeva, T. 1964. Maximum Permissible Concentrations of Toxic Substances in Atmospheric Air of Populated Places. Hyg. Sanit. (USSR) 29(5):166-168.

Nylander, P., H. Olofsson, B. Rasmuson, and H. Svahlin. 1978. Mutagenic Effects of Petrol in *Drosophila melanogaster*: I. Effects of Benzene and 1,2-Dichloroethane. Mutat. Res. 57(2):163-167.

Olson, K. 1977*a*. Three-Generation Reproductive Study of Ethylene Dichloride in Rats. Smithsonian Science Information Exchange Notice of Research Project.

Olson, K. 1977*b*. Teratological Study of Inhaled Ethylene Dichloride in Rats and Rabbits. Smithsonian Science Information Exchange Notice of Research Project.

Patterson, R. M., M. I. Bornstein, R. R. Hall, and E. Garshick. 1975. Assessment of Ethylene Dichloride as a Potential Air Pollution Problem, Vol. III. Report No. GCA-TR-75-32-G(3). GCA Corp., Bedford, Mass. 25 pp.

Pearson, C. R., and G. McConnell. 1975. Chlorinated C_1 and C_2 Hydrocarbons in the Marine Environment. Proc. R. Soc. London Ser. B. 189:305-332.

Pellizzari, E. D. 1977. Analysis of Organic Air Pollutants by Gas Chromatography and Mass Spectroscopy. EPA-600/2-77-100. U.S. Environmental Protection Agency, Research Triangle Park, N.C. 103 pp.

Pellizzari, E. D. 1978. Quantification of Chlorinated Hydrocarbons in Previously Collected Air Samples. U.S. Environmental Protection Agency, Research Triangle Park, N.C. (unpublished). 137 pp.

Pervier, J. W., R. C. Barley, D. E. Field, B. M. Friedman, R. B. Morris, and W. A. Schwartz. 1974. Survey Reports on Atmospheric Emissions from the Petrochemical Industry, Vol. II. EPA-450/3-73-005-b. U.S. Environmental Protection Agency, Research Triangle Park, N.C. 321 pp.

Peterson, J. E., H. R. Hoyle, and E. J. Schneider. 1956. The Analysis of Air for Halogenated Hydrocarbon Contaminants by Means of Absorption on Silica Gel. Am. Ind. Hyg. Assoc. Q. 17(14):429-433.

Plaa, G. L., and R. E. Larson. 1965. Relative Nephrotoxic Properties of Chlorinated Methane, Ethane, and Ethylene Derivatives in Mice. Toxicol. Appl. Pharmacol. 7:37-44.

Pradhan, S., and M. Govindan. 1954. Bioassay of Insecticides: III. Comparative Toxicity of Six Common Fumigants to *Trogoderma granaria* Everts (grubs) and *Tribolium castaneum* Herbst. (adults). Indian J. Entomol. 16:173-175.

Price, K. S., G. T. Waggy, and R. A. Conway. 1974. Brine Shrimp Bioassay and Seawater BOD of Petrochemicals. J. Water Pollut. Control Fed. 46(1):63-77.

Radding, S. B., D. H. Liu, H. L. Johnson, and T. Mill. 1977. Review of the Environmental Fate of Selected Chemicals. EPA-560/5-77-003. U.S. Environmental Protection Agency, Washington, D.C. 147 pp.

Rannug, U., and C. Ramel. 1977. Mutagenicity of Waste Products from Vinyl Chloride Industries. J. Toxicol. Environ. Health 2:1019-1029.

Rannug, U., and C. Ramel. 1978. The Mutagenicity and Metabolism of 1,2-Dichloroethane (abstract). Mutat. Res. 53:251-252.

Rannug, U., A. Sundvall, and C. Ramel. 1978. The Mutagenic Effect of 1,2-Dichloroethane on *Salmonella typhimurium*: I. Activation through Conjugation with Glutathione In Vitro. Chem. Biol. Interact. 20:1-16.

Rapoport, I. 1960. The Reaction of Gene Proteins with 1,2-Dichloroethane (English summary). Dokl. Akad. Nauk SSSR 134(5):1214-1217.

Roschin, A. V., and L. A. Timofeevskaya. 1975. Chemical Substances in the Work Environment: Some Comparative Aspects of USSR and U.S. Hygienic Standards. Ambio 4(1):30-33.

Rosenberg, R., O. Grahn, and L. Johansson. 1975. Toxic Effects of Aliphatic Chlorinated By-products from Vinyl Chloride Production on Marine Animals. Water Res. 9:607-612.

Rosenkranz, H. S. 1977. Mutagenicity of Halogenated Alkanes and Their Derivatives. Environ. Health Perspect. 21:79-84.

Rosenkranz, S., H. S. Carr, and H. S. Rosenkranz. 1974. 2-Haloethanols: Mutagenicity and Reactivity with DNA. Mutat. Res. 26:367-370.

Rothon, R. N. 1972. Chlorinated Hydrocarbons. In: Chemical Technology: An Encyclopedic Treatment, Vol. 4, Petroleum and Organic Chemicals. Barnes and Noble Books, New York. p. 202.

Rout, G., and B. K. Maiti. 1974. Relative Toxicity of Some Insecticides and Fumigants to Granary Mite, *Leiodinychus krameri* G. and R. Canestrini (Uropodidae: Acarina). Bull. Grain Technol. 12(3):180-184.

Rushing, D. E. 1958. Gas Chromatography in Industrial Hygiene and Air Pollution Problems. Am. Ind. Hyg. Assoc. J. 19:238-245.

Saltzman, B. E. 1969. Direct Reading Colorimetric Indicators. In: Handbook of Analytical Toxicology, I. Sunshine, ed. The Chemical Rubber Co., Cleveland, Ohio. pp. 671-682.

Sax, N. I., ed. 1974. Industrial Pollution. Van Nostrand Reinhold Co., New York. p. 623.

Sax, N. I. 1975. Ethylene Dichloride. In: Dangerous Properties of Industrial Materials, 4th ed. Van Nostrand Reinhold Co., New York. p. 736.

Sayers, R. R., W. P. Yant, C. P. Waite, and F. A. Patty. 1930. Acute Response of Guinea Pigs to Vapors of Some New Commercial Organic Compounds: I. Ethylene Dichloride. Public Health Rep. 45:225-239.

Schwartz, W. A., F. G. Higgins, Jr., J. A. Lee, R. Newirth, and J. W. Pervier. 1974. Engineering and Cost Study of Air Pollution Control for the Petrochemical Industry, Vol. 3, Ethylene Dichloride Manufacture by Oxychlorination. EPA-450/3-73-006-c. U.S. Environmental Protection Agency, Research Triangle Park, N.C. 104 pp.

Shakarnis, V. F. 1969. Induction of X Chromosome Nondisjunction and Recessive Sex-Linked Lethal Mutations in Females of *Drosophila melanogaster* by 1,2-Dichloroethane. Sov. Genet. 5(12):1666-1671.

Shakarnis, V. 1970. Effect of 1,2-Dichloroethane on Chromosome Nondisjunction and Recessive Sex-linked Lethals in a Radioresistant Strain of *Drosophila melanogaster* (English summary). Vestn. Leningr. Univ. Biol. 25(1):153-156.

Singh, H. B., L. J. Salas, and L. A. Cavanagh. 1977. Distribution, Sources and Sinks of Atmospheric Halogenated Compounds. J. Air Pollut. Control Assoc. 27(4):332-336.

Snapp, O. I. 1955. Peach Insect Investigations at Fort Valley, Georgia, during 1954. J. Econ. Entomol. 48(6):734-736.

Snapp, O. I. 1958. Trunk Sprays for Control of the Peach Tree Borer. J. Econ. Entomol. 51(4):557-558.

Sosedov, N. I. 1959. Grain Fumigation and the Aims of Food Hygiene (English summary). Vopr. Pitan. 18(4):11-15.

Spence, J. W., and P. Hanst. 1978. Oxidation of Chlorinated Ethanes. J. Air Pollut. Control Assoc. 28(3):250-253.

Spencer, H. C., V. K. Rowe, E. M. Adams, D. D. McCollister, and D. D. Irish. 1951. Vapor Toxicity of Ethylene Dichloride Determined by Experiments on Laboratory Animals. Arch. Ind. Hyg. Occup. Med. 4:482-493.

Srivastava, O. S. 1972. Chemical Control of Bark-Eating Caterpillar, *Indarbela quadrinotata* Walker (Lepidoptera: Metarbelidae) in Guava Trees. Indian J. Agric. Sci. 42(9):847-848.

Starshov, I. M., and G. Y. Ivanova. 1969. Determination of Traces of Dichloroethane in Air. Gig. Sanit. 34(7):54-55.

Stewart, R. D. 1967. Poisoning from Chlorinated Hydrocarbon Solvents. Am. J. Nurs. 67(1):85-87.

Storck, W. J. 1978. Production Rises for Most Major Chemicals. Chem. Eng. News 56(18):31-37.

Storey, C. L., L. D. Kirk, and G. C. Mustakas. 1972. Fate of EDC-CCl_4 (75:25) Residues during Milling and Oil Extraction of Soybeans. J. Econ. Entomol. 65(4):1126-1129.

Sykes, J. F., and A. K. Klein. 1957. Chloro-organic Residues in Milk of Cows Orally Administered Ethylene Dichloride. J. Assoc. Off. Agric. Chem. 40:203-209.

Symons, J. M., T. A. Bellar, J. K. Carswell, J. DeMarco, K. L. Kropp, G. Robeck, D. R. Seeger, C. J. Slocum, B. L. Smith, and A. A. Stevens. 1975. National Organics Reconnaissance Survey for Halogenated Organics. J. Am. Water Works Assoc. 67:634-647.

Szalai, I., L. Ferenczy, M. Varga, and M. Dévay. 1957. Metabolic Changes in Sprouting Potato Tubers Treated with "Rindite." Acta Biol. (Szeged) 8(1):11-19.

Tardiff, R. G., G. P. Carlson, and V. Simmon. 1976. Halogenated Organics in Tap Water: A Toxicological Evaluation. In: The Environmental Impact of Water Chlorination, R. L. Jolley, ed. Oak Ridge National Laboratory, Oak Ridge, Tenn. pp. 213-227.

Theiss, J. C., G. D. Stoner, M. B. Shimkin, and E. K. Weisburger. 1977. Test for Carcinogenicity of Organic Contaminants of United States Drinking Waters by Pulmonary Tumor Response in Strain A Mice. Cancer Res. 37:2717-2720.

Thorup, S. 1957. Breaking Dormancy of Beech. Physiol. Plant. 10:728-731.

Tsuruta, H. 1975. Percutaneous Absorption of Organic Solvents: I. Comparative Study of the In Vivo Percutaneous Absorption of Chlorinated Solvents in Mice. Ind. Health 13:227-236.

U.S. Environmental Protection Agency. 1975*a*. Report on the Problem of Halogenated Air Pollutants and Stratospheric Ozone. EPA-600/9-75-008. Research Triangle Park, N.C. 55 pp.

U.S. Environmental Protection Agency. 1975*b*. Standard Support and Environmental Impact Statement: Emission Standard for Vinyl Chloride. EPA-450/2-75-009. Research Triangle Park, N.C.

U.S. Environmental Protection Agency. 1977. A Study of Industrial Data on Candidate Chemicals for Testing. EPA-560/5-88-006. Washington, D.C. 592 pp.

U.S. Environmental Protection Agency. 1978*a*. Personal communication citing Stanford Research Institute, 1975.

U.S. Environmental Protection Agency. 1978*b*. Personal communication citing U.S. Department of Commerce, 1970-1974.

U.S. International Trade Commission. 1973-1977. Synthetic Organic Chemicals, U.S. Production and Sales.

Van Dyke, R. A., and C. G. Wineman. 1971. Enzymatic Dechlorination: Dechlorination of Chloroethanes and Propanes In Vitro. Biochem. Pharmacol. 20:463-470.

Vandergraft, E. E., O. L. Shotwell, M. L. Smith, and C. W. Hesseltine. 1973. Mycotoxin Formation Affected by Fumigation of Wheat. Cereal Sci. Today 18(12):412-414.

Varga, M. B., and L. Ferenczy. 1956. Effect of Rindite on the Development of the Growth-Substances in Potato Tubers. Nature (London) 178:1075.

Verschueren, K. 1977. Handbook of Environmental Data on Organic Chemicals. Van Nostrand Reinhold Co., New York. p. 319.

Vincent, L. E., and D. L. Lindgren. 1965. Influence of Fumigation and Age on Carbon Dioxide Production of Some Stored-Product Insects. J. Econ. Entomol. 58(4):660-664.

Vogel, E., and J.L.R. Chandler. 1974. Mutagenicity Testing of Cyclamate and Some Pesticides in *Drosophila melanogaster*. Experientia 30(6): 621-623.

Voogd, C. E. 1973. Mutagenic Action of Epoxy Compounds and Several Alcohols (abstract). Mutat. Res. 21:52.

Voogd, C. E., J. Jacobs, and J. J. van der Stel. 1972. On the Mutagenic Action of Dichlorovos. Mutat. Res. 16:413-416.

Vozovaya, M. A. 1971. Changes in the Estrous Cycle of White Rats Chronically Exposed to the Combined Action of Gasoline and Dichloroethane Vapors (translation). Akush. Ginekol. (Kiev) 47(12):65-66.

Vozovaya, M. A. 1974. Development of Offspring of Two Generations Obtained from Females Subjected to the Action of Dichloroethane (translation). Gig. Sanit. 7:25-28.

Vozovaya, M. A. 1975. The Effect of Low Concentrations of Gasoline, Dichloroethane and Their Combination on the Generative Function of Animals and on the Development of Progeny (translation). Gig. Tr. Prof. Zabol. 7:20-23.

Vozovaya, M. A. 1976. Effect of Low Concentrations of Gasoline, Dichloroethane and Their Combination on the Reproductive Function of Animals (translation). Gig. Sanit. 6:100-102.

Vozovaya, M. A., and L. K. Malyarova. 1975. Mechanism of Action of Ethylene Dichloride on the Fetus of Experimental Animals (English summary). Gig. Sanit. 6:94-96.

Wadhi, S. R., and T. Soares. 1965. Comparative Toxicity of Some Fumigants to the Red Scale, *Aonidiella aurantii* (Maskell) (Hemiptera: Coccoidea). Indian J. Entomol. 27:85-88.

Weast, R., ed. 1977. Handbook of Chemistry and Physics, 57th ed. The Chemical Rubber Co., Cleveland, Ohio.

Weaver, R. J., S. B. McCune, and B. G. Coombe. 1961. Effects of Various Chemicals and Treatments on Rest Period of Grape Buds. Am. J. Enol. 12:131-142.

White, L. D., D. G. Taylor, P. A. Mauer, and R. E. Kupel. 1970. A Convenient Optimized Method for the Analysis of Selected Solvent Vapors in the Industrial Atmosphere. Am. Ind. Hyg. Assoc. J. 31:225-232.

Whitney, W. K. 1960. Distribution and Sorption of Liquid Fumigants Applied to Wheat by Recirculation. J. Econ. Entomol. 53(2):259-261.

Whitney, W. K. 1961. Fumigation Hazards as Related to the Physical, Chemical and Biological Properties of Fumigants. Pest Control 29(7): 16-21.

Windholtz, M., ed. 1976. The Merck Index, 9th ed. Merck and Co., Rahway, N.J. 1312 pp.

Winteringham, F.P.W., and J. M. Barnes. 1955. Comparative Response of Insects and Mammals to Certain Halogenated Hydrocarbons Used as Insecticides. Physiol. Rev. 35(3):701-739.

Winteringham, F.P.W., and G. C. Hellyer. 1954. Effects of Methylbromide, Ethylenedibromide, and Ethylene Dichloride on the Phosphorus Metabolism of *Musca domestica* L. Biochem. J. 58(4):X/V-X/VI.

Wirtschafter, Z. T., and E. D. Schwartz. 1939. Acute Ethylene Dichloride Poisoning. J. Ind. Hyg. Toxicol. 21(4):126-131.

Woodard, G., S. W. Lange, K. W. Nelson, and H. O. Calvery. 1941. The Acute Oral Toxicity of Acetic, Chloroacetic, Dichloroacetic and Trichloroacetic Acids. J. Ind. Hyg. Toxicol. 23:78-82.

Yllner, S. 1971. Metabolism of 1,2-Dichloroethane-^{14}C in the Mouse. Acta Pharmacol. Toxicol. 30:257-265.

Yodaiken, R. E., and J. R. Babcock. 1973. 1,2-Dichloroethane Poisoning. Arch. Environ. Health 26:281-284.

Zhizhonkov, N. Y. 1976. Acute Dichloroethane Poisoning (translation). Vrach. Delo 6:127-128.

TECHNICAL REPORT DATA
(Please read Instructions on the reverse before completing)

1. REPORT NO. EPA-560/2-78-006	2.	3. RECIPIENT'S ACCESSION NO.
4. TITLE AND SUBTITLE Investigations of Selected Environmental Pollutants: 1,2-Dichloroethane		5. REPORT DATE
		6. PERFORMING ORGANIZATION CODE
7. AUTHOR(S) John S. Drury and Anna S. Hammons		8. PERFORMING ORGANIZATION REPORT NO. ORNL/EIS-148
9. PERFORMING ORGANIZATION NAME AND ADDRESS Information Center Complex, Information Division, Oak Ridge National Laboratory, Oak Ridge, Tennessee 37830		10. PROGRAM ELEMENT NO.
		11. CONTRACT/GRANT NO. IAG D7-0151
12. SPONSORING AGENCY NAME AND ADDRESS Office of Toxic Substances, U.S. Environmental Protection Agency, Washington, D.C. 20460		13. TYPE OF REPORT AND PERIOD COVERED Final Technical Report
		14. SPONSORING AGENCY CODE
15. SUPPLEMENTARY NOTES		

16. ABSTRACT

This study is a comprehensive, multidisciplinary review of the health and environmental effects of 1,2-dichloroethane. Other pertinent aspects such as production, use, methods of analysis, and regulatory restrictions are also discussed. Approximately 250 references are cited.

1,2-Dichloroethane is manufactured in greater tonnage than any other chlorinated organic compound; in 1977 nearly 5 million metric tons was synthesized in the United States. It is used primarily as a raw material in the production of vinyl chloride monomer and a few other chlorinated organic compounds. The environment is exposed to this chlorinated hydrocarbon primarily through manufacturing losses. Smaller exposures occur through dispersive uses, such as grain fumigations and application of paints and other coatings, and through storage, distribution, and waste disposal operations. Concentrations of 1,2-dichloroethane in environmental air and water distant from point sources are small — on the order of parts per billion or less. Concentrations in the environment near point sources are unknown.

1,2-Dichloroethane is toxic to humans, other vertebrates and invertebrates, plants, and microorganisms. It is an established carcinogen in rats and mice exposed by oral intubation and is a weak mutagen in some bacteria and certain grains.

17. KEY WORDS AND DOCUMENT ANALYSIS

a. DESCRIPTORS	b. IDENTIFIERS/OPEN ENDED TERMS	c. COSATI Field/Group
Pollutants Toxicology 1,2-Dichloroethane Ethylene Dichloride	Health Effects	

18. DISTRIBUTION STATEMENT	19. SECURITY CLASS *(This Report)* Unclassified	21. NO. OF PAGES
	20. SECURITY CLASS *(This page)* Unclassified	22. PRICE

EPA Form 2220-1 (Rev. 4-77) PREVIOUS EDITION IS OBSOLETE