EPA-600/2-75-042
September 1975

Environmental Protection Technology Series

CONTROL OF HYDROCARBON EMISSIONS FROM PETROLEUM LIQUIDS

Industrial Environmental Research Laboratory
Office of Research and Development
U.S. Environmental Protection Agency
Research Triangle Park, N.C. 27711

EPA-600/2-75-042

CONTROL OF HYDROCARBON EMISSIONS FROM PETROLEUM LIQUIDS

by

C.E. Burklin, E.C. Cavanaugh, J.C. Dickerman,
S.R. Fernandes, and G.C. Wilkins

Radian Corporation
8500 Shoal Creek Boulevard
Austin, Texas 78766

Contract No. 68-02-1319, Task 12
ROAP No. 21BJV-034
Program Element No. 1NB458

EPA Project Officer: L. Lorenzi, Jr.

Industrial Environmental Research Laboratory
Office of Energy, Minerals, and Industry
Research Triangle Park, NC 27711

Prepared for

U.S. ENVIRONMENTAL PROTECTION AGENCY
Office of Research and Development
Washington, DC 20460

September 1975

RESEARCH REPORTING SERIES

Research reports of the Office of Research and Development, U.S. Environmental Protection Agency, have been grouped into five series. These five broad categories were established to facilitate further development and application of environmental technology. Elimination of traditional grouping was consciously planned to foster technology transfer and a maximum interface in related fields. The five series are:

1. Environmental Health Effects Research
2. Environmental Protection Technology
3. Ecological Research
4. Environmental Monitoring
5. Socioeconomic Environmental Studies

This report has been assigned to the ENVIRONMENTAL PROTECTION TECHNOLOGY STUDIES series. This series describes research performed to develop and demonstrate instrumentation, equipment and methodology to repair or prevent environmental degradation from point and non-point sources of pollution. This work provides the new or improved technology required for the control and treatment of pollution sources to meet environmental quality standards.

EPA REVIEW NOTICE

This report has been reviewed by the U.S. Environmental Protection Agency and approved for publication. Approval does not signify that the contents necessarily reflect the views and policies of the Agency, nor does mention of trade names or commercial products constitute endorsement or recommendation for use.

This document is available to the public through the National Technical Information Service, Springfield, Virginia 22161.

ABSTRACT

The petroleum industry has been identified as a large source of hydrocarbon emissions by virtue of the large volumes of volatile hydrocarbons involved in the myriad of operations comprising the industry. This report is a state-of-the-art review on the availability and application of technology for the control of hydrocarbon emissions to the atmosphere from facilities for the production, refining, and marketing of liquid petroleum fuels. The scope of this study includes (1) the identification of major hydrocarbon emission sources within the petroleum industry and the quantity of their emissions, (2) a review of existing hydrocarbon emission control technology and the current extent of its application by the petroleum industry, and (3) the identification of hydrocarbon emission sources within the petroleum industry for which control techniques are either not available or else not widely applied.

This final report is submitted in fulfillment of Task 12 of contract 68-02-1319 under the sponsorship of the Office of Research and Development, Environmental Protection Agency.

TABLE OF CONTENTS

		Page
1.0	SUMMARY	1
1.1	Project Objective	1
1.2	Methodology	1
1.3	Results	2
1.4	Conclusions	5
1.5	Recommendations	6
2.0	THE INDUSTRY	8
3.0	CRUDE OIL PRODUCTION	14
3.1	Domestic Oil Fields	14
3.1.1	Operations	14
3.1.2	Products	16
3.1.3	Storage and Handling	18
3.1.4	Emissions	20
3.2	Domestic Offshore	23
3.2.1	Operations	23
3.2.2	Products	24
3.2.3	Storage and Transport to Mainland	24
3.2.4	Emissions	26
3.3	Emission Controls	26
4.0	CRUDE OIL TRANSPORT	28
4.1	Domestic Oil Fields and Refineries	28
4.1.1	Pipelines	28
4.1.2	Domestic Tanker Transport	29
4.1.3	Other Transport Methods	30
4.2	Imported Crude	32
4.3	Intermediate Storage, Processing, and Handling	34
4.4	Emissions	34

TABLE OF CONTENTS (Cont.)

		Page
4.5	Emission Controls	40
5.0	PETROLEUM REFINERIES	41
5.1	The Industry	41
5.1.1	Statistics	41
5.1.2	Refining Processes	44
5.1.3	Refinery Products	54
5.1.4	Auxiliary Processes	56
5.2	Hydrocarbon Emission Sources	61
5.2.1	Combustion Sources	62
5.2.2	Storage and Loading Sources	65
5.2.3	Process Sources	75
5.2.4	Fugitive Sources	86
5.3	Hydrocarbon Emission Controls	92
5.3.1	Combustion Source Controls	92
5.3.2	Storage and Loading Controls	93
5.3.3	Process Source Controls	98
5.3.4	Fugitive Source Controls	103
6.0	GASOLINE MARKETING	106
6.1	The Industry	106
6.1.1	Quantity of Products	106
6.1.2	Nature of Products	110
6.2	The Gasoline Marketing Network	115
6.2.1	Bulk Terminals	119
6.2.2	Bulk Stations	121
6.2.3	Service Stations	123
6.3	Industry Trends	126
6.3.1	U.S. Gasoline Consumption	126
6.3.2	Gasoline Marketing Facilities	132

TABLE OF CONTENTS (Cont.)

		Page
6.4	Emissions	138
6.4.1	Quantity of Hydrocarbon Emissions	138
6.4.1.1	Bulk Terminals	140
6.4.1.2	Bulk Stations	147
6.4.1.3	Service Stations	148
6.4.1.4	Aviation Gasoline Hydrocarbon Emissions	151
6.4.2	Adverse Effects of Hydrocarbon Emissions	153
6.4.2.1	Effects on Human Health	153
6.4.2.2	Effects on Vegetation	155
6.4.2.3	Materials Damage	156
6.4.2.4	Other Effects	156
6.4.3	Seasonal Characteristics of Emissions	156
6.5	Emission Control Technology	159
6.5.1	Bulk Terminals	159
6.5.1.1	Storage Tank Controls	159
6.5.1.2	Loading Rack Vapor Controls	160
6.5.1.3	Vapor Recovery Units	165
6.5.2	Service Stations	169
6.5.2.1	Stage I Control Technology	170
6.5.2.2	Stage II Control Technology	171
6.5.3	Bulk Stations	182
6.5.3.1	Vapor Balance	182
6.5.3.2	Vapor Recovery Systems	183
6.5.3.3	Operating Reliability	185
7.0	JET FUEL MARKETING	186
7.1	The Industry	186
7.1.1	Jet Fuel Description	186
7.1.2	Uses	187
7.2	Product Distribution and Storage	187
7.2.1	Transport	187
7.2.2	Storage	187

TABLE OF CONTENTS (Cont.)

		Page
7.3	Emissions and Controls	189
8.0	DISTILLATE AND DIESEL FUEL MARKETING	192
8.1	The Industry	192
8.1.1	Distillate Fuel Oils	192
8.1.3	Use	193
8.2	Product Distribution and Storage	195
8.2.1	Distribution	195
8.2.2	Storage	195
8.3	Emissions	195
9.0	RESIDUAL FUELS	198
9.1	The Industry	198
9.1.1	Product Description	198
9.1.2	Uses	199
9.1.3	Domestic Production	201
9.2	Distribution	201
9.2.1	Storage	201
9.2.2	Transportation	202
9.3	Emissions	202
10.0	NATURAL GAS LIQUIDS	203
10.1	The Industry	203
10.2	Gas Plants	204
10.3	Product Distribution and Storage	209
10.4	Emissions	209
10.5	Emission Controls	210
11.0	LIQUEFIED PETROLEUM GASES	211
11.1	Sources and Quantities	211
11.2	Recovery of LPG from Refineries	211

TABLE OF CONTENTS (Cont.)

		Page
11.3	Distribution, Storage and Handling	213
11.4	Emissions	214
11.5	Emission Controls	214
12.0	PETROCHEMICAL FEEDSTOCKS	215
12.1	Methane	215
12.2	Ethane-Ethylene	216
12.3	Propane-Propylene	217
12.4	Butane-Butylenes	217
12.5	Aromatics	218
12.6	Emissions	218
13.0	STATUS OF CONTROL TECHNOLOGY	219
13.1	Existing Control Technology	219
13.2	Current Application of Control Technology	220
13.3	Gaps in Control Technology	225
REFERENCES		226
UNIT CONVERSIONS		230

LIST OF TABLES

		Page
TABLE 1.3-1	Summary of Controlled and Uncontrolled Hydrocarbon Emissions From The Petroleum Industry	3
TABLE 2.0-1	Petroleum Industry Supply and Disposition of Products - 1973	9
TABLE 2.0-2	Petroleum Products - 1973	10
TABLE 3.1-1	Estimated Hydrocarbon Emissions From Crude Oil Production, Monterey County - 1967	22
TABLE 4.1-1	Tanker and Barge Movements of Crude Oil	31
TABLE 4.2-1	Crude Oil Imports	32
TABLE 4.4-1	Splash-Loading-Loss Tests for Tank Cars (Crude Oil)	38
TABLE 4.4-2	Subsurface-Loading-Loss Tests for Tank Cars (Crude Oil)	39
TABLE 5.1-1	Refinery Size Distribution - 1971	42
TABLE 5.1-2	Distribution of Refinery Locations (1974)	43
TABLE 5.1-3	Petroleum Product Rate - 1973	55
TABLE 5.2-1	Heat Demand of Some Typical Refining Units	63
TABLE 5.2-2	Hydrocarbon Emissions from Refinery Boilers and Heaters	64
TABLE 5.2-3	Nature of Product Storage at Refineries	71
TABLE 5.2-4	Hydrocarbon Emission Factors for Petroleum Storage	73
TABLE 5.2-5	Hydrocarbon Emissions from Petroleum Product Loading	77
TABLE 5.2-6	Modes of Product Transportation from Refineries (1973)	78
TABLE 5.2-7	Effectiveness of Mechanical and Packed Pump Seals on Various Types of Hydrocarbons	89
TABLE 6.1-1	Gasoline Refining and Marketing Facilities	107
TABLE 6.1-2	Motor Gasoline Survey, Summer 1973 Average Data for Brands in Each District	112

LIST OF TABLES (Cont.)

		Page
TABLE 6.1-3	Motor Gasoline Survey, Winter 1971-72 Average Data for Brands in Each District. .	113
TABLE 6.2-1	U.S. Bulk Storage Capacity by Tank Size . .	120
TABLE 6.3-1	Gasoline Consumption By State	129
TABLE 6.3-2	Average Fuel Consumption 1969-1973.	133
TABLE 6.3-3	Number of Gasoline Service Stations and Sales Volume.	137
TABLE 6.4-1	Predicted Hydrocarbon Emissions from U.S. Bulk Terminal Sources	145
TABLE 6.4-2	Case Comparison of Predicted Hydrocarbon Emissions from U.S. Bulk Terminals.	146
TABLE 6.4-3	Predicted Hydrocarbon Emissions from U.S. Bulk Stations	149
TABLE 6.4-4	Predicted Hydrocarbon Emissions from U.S. Service Stations.	152
TABLE 6.4-5	Predicted Hydrocarbon Emissions from Aviation Gasoline	154
TABLE 7.1-1	Jet Fuel Consumption (1973)	188
TABLE 7.2-1	Hydrocarbon Emission Factors for Jet Fuels Marketing	190
TABLE 8.1-1	Properties of Distillate Fuels.	192
TABLE 8.1-2	U.S. Distillate Fuel Oil Domestic Demand By Uses	194
TABLE 8.3-1	Hydrocarbon Emission Factors for Distillate Fuels	196
TABLE 9.1-1	U.S. Residual Fuel Oil Domestic Demand By Uses.	200
TABLE 13.1-1	Summary of Controlled and Uncontrolled Hydrocarbon Emissions from the Petroleum Industry.	221

LIST OF FIGURES

		Page
FIGURE 2.0-1	Production, Transport, and Use of Crude Oil and Petroleum Products-1973.	11
FIGURE 3.1-1	Production of Natural Gas and Natural Gas Products	19
FIGURE 4.2-1	Marine Tanker.	33
FIGURE 4.3-1	Transportation of Crude Oil, 1973.	35
FIGURE 5.1-1	Typical Fully Integrated Gasoline Refinery .	45
FIGURE 5.2-1	Standard Fixed Roof Tank	67
FIGURE 5.2-2	Floating Roof Tank - (double deck type). . .	67
FIGURE 5.2-3	Internal Floating Cover Tank	68
FIGURE 5.2-4	Lifter Roof Tank	68
FIGURE 5.2-5	Flexible Diaphragm Tank.	69
FIGURE 5.2-6	Loading Losses from Marine Vessels, Tank Cars and Tank Trucks.	76
FIGURE 5.2-7	Typical Moving-Bed Catalytic Cracking Unit .	79
FIGURE 5.2-8	Typical Fluidized Bed Catalytic Cracking Unit	79
FIGURE 5.2-9	Typical Steam Ejector - Barometric Condenser.	81
FIGURE 5.2-10	Flow Diagram of Asphalt Blowing Process. . .	83
FIGURE 5.2-11	Modern Oil-Water Separator	85
FIGURE 5.2-12	Packed Seal.	87
FIGURE 5.2-13	Mechanical Seal.	87
FIGURE 5.2-14	Pressure Relief Valve.	90
FIGURE 5.3-1	Integrated Vapor Gathering System.	94
FIGURE 5.3-2	Top Loading Arm Equipped With A Vapor Recovery Nozzle.	96
FIGURE 5.3-3	Bottom Loading Vapor Recovery.	97
FIGURE 6.1-1	Vapor Pressures of Gasolines	111
FIGURE 6.1-2	Map Showing Locations and Numbers of Samples for the National Motor Gasoline Survey, Summer 1973.	114

LIST OF FIGURES (Cont.)

		Page
FIGURE 6.1-3	Motor Gasoline Volatility Trends	116
FIGURE 6.2-1	The Gasoline Marketing Distribution System in the United States	117
FIGURE 6.2-2	Vapor and Liquid Flow in a Typical Bulk Terminal	122
FIGURE 6.2-3	Vapor and Liquid Flow in a Typical Bulk Plant	124
FIGURE 6.2-4	Vapor and Liquid Flow in a Typical Service Station	127
FIGURE 6.3-1	U.S. Gasoline Consumption	128
FIGURE 6.3-2	Marketing Trends at Gasoline Service Stations	135
FIGURE 6.4-1	Gasoline Flow Through the Marketing Network	141
FIGURE 6.4-2	Hourly Oxidant Measurements, Azusa, Los Angeles, and San Diego, California - 1972	157
FIGURE 6.4-3	Hourly Oxidant Measurements, Bakersfield and Stockton, California, and Denver, Colorado - 1972	158
FIGURE 6.5-1	Top Loading Arm Equipped With A Vapor Recovery Nozzle	161
FIGURE 6.5-2	Detail of a Vapor Recovery Nozzle	162
FIGURE 6.5-3	Bottom Loading Vapor Recovery	164
FIGURE 6.5-4	Schematic of a Terminal Vapor Recovery Unit	167
FIGURE 6.5-5	Stage I Vapor Recovery Equipment	172
FIGURE 6.5-6	Diagram of a Vapor Balance System	176
FIGURE 6.5-7	Low Pressure Tank Emissions Vs Tank Operating Pressure Range	184
FIGURE 10.2-1	Absorption Plant With LPG - Natural Gasoline Splitter	206
FIGURE 10.2-2	Refrigerated Absorption Process Using Chilled Glycol as Absorbent	207

LIST OF FIGURES (Cont.)

Page

FIGURE 10.2-3 Adsorption Process. 208

FIGURE 11.1-1 Disposition of LPG for 1973 212

1.0 SUMMARY

1.1 Project Objective

The petroleum industry has been identified as a large source of hydrocarbon emissions by virtue of the large volumes of gases and volatile petroleum liquids involved in the many processing and handling steps comprising the industry.

The Environmental Protection Agency has contracted with Radian Corporation to develop a state-of-the-art review on availability and application of technology for the control of hydrocarbon emissions from facilities for production, refining, and marketing of liquid petroleum fuels.

1.2 Methodology

Radian Corporation developed a three phase study for achieving these objectives. In the first phase, Radian reviewed the various operations in the petroleum industry and identified the major sources of hydrocarbon emissions. Emission quantities were also defined where possible.

The second phase involved identifying existing control technology applicable to these emission sources and the degree of emission control obtainable. The extent of application of the existing control technology was included.

The third phase involved identification of hydrocarbon emission sources within the petroleum industry for which control techniques are either not available or else not widely applied.

For convenience, Radian divided the petroleum industry into ten operating areas including all phases of oil and gas production, petroleum refining, and petroleum products marketing. For each area the processes involved in that area were identified. Other information included were the nature of the products, feed and product throughput rates, and growth trends within the industry. Major hydrocarbon emission sources within each area were determined and related to specific processes. Typical emission rates were quantified where available. Finally, for each area the control technology applicable to the hydrocarbon emission sources within that area was identified. Control efficiencies and information on the current extent of technology application were obtained where such information was available for the various control techniques.

1.3 Results

The results of the information obtained in this study are summarized in Table 1.3-1. The major hydrocarbon emission sources identified for each area of the petroleum industry are given on the table. Also shown are average emission factors for the uncontrolled emission sources, for average emission sources based on current degrees of control, and for emission sources fully applying the latest control technology. For maximum estimating accuracy, emission sources were broken down into the smallest divisions for which data were available.

The efficiency of control techniques and the current extent of their application can be obtained by comparing this set of emission factors. The right-hand column of Table 1.3-1 lists comments on control technology applicable to each emission source. For a comparison of the relative impacts of each hydrocarbon emission source, the industry throughput and production

TABLE I.3-1

SUMMARY OF CONTROLLED AND UNCONTROLLED HYDROCARBON EMISSIONS FROM THE PETROLEUM INDUSTRY

	1973 Throughput Rate	Emission Factors			Estimated 1973 Emissions (tons/day)	Comment on Control Device Applied
		Uncontrolled	Current Controls	Completely Controlled		
Natural Gas Production and Processing						
vented nat. gas	65.9×10^9 SCF/day	NA	20 lbs/10^6 SCF	NA	659	vapor recovery
fugitive nat. gas leaks	65.9×10^9 SCF/day	NA	190 lbs/10^6 SCF	NA	6261	housekeeping, maintenance
					6920 total	
Crude Oil Production						
storage	9.2×10^6 bpd	NA	4 lbs/10^3 bbl	NA	17	floating roofs
wastewater separator	9.2×10^6 bpd	NA	8 lbs/10^3 bbl	NA	36	cover
pump seals	9.2×10^6 bpd	NA	74 lbs/10^3 bbl	NA	339	mechanical seals
compressor seals	9.2×10^6 bpd	NA	4 lbs/10^3 bbl	NA	17	mechanical seals
relief valves	9.2×10^6 bpd	NA	8 lbs/10^3 bbl	NA	36	rupture discs, vapor recovery
pipeline valves	9.2×10^6 bpd	NA	12 lbs/10^3 bbl	NA	53	maintenance
					498 total	
Crude Transportation						
storage	12.4×10^6 bpd	660 lbs/10^3 bbl	256 lbs/10^3 bbl	136 lbs/10^3 bbl	1587	floating roofs
rail & truck loading	0.2×10^6 bpd	540 lbs/10^3 bbl	198 lbs/10^3 bbl	90 lbs/10^3 bbl	20	bottom loading
marine loading	1.1×10^6 bpd		96 lbs/10^3 bbl	96 lbs/10^3 bbl	53	bottom loading already in use
					1660 total	
Refinery Operations						
boilers & heaters	12.4×10^6 bpd	UD	10 lbs/10^3 bbl	UD	62	
compressor engines	12.4×10^6 bpd	UD	16 lbs/10^3 bbl	UD	99	housekeeping
storage	12.4×10^6 bpd	1200 lbs/10^3 bbl	470 lbs/10^3 bbl	250 lbs/10^3 bbl	2914	floating roofs
loading operations	12.4×10^6 bpd	32 lbs/10^3 bbl	32 lbs/10^3 bbl	5 lbs/10^3 bbl	198	vapor recovery
FCC unit	4.03×10^6 bpd	220 lbs/10^3 bbl[1]	NA	neg	111	CO boiler
TCC unit	0.38×10^6 bpd	87 lbs/10^3 bbl[1]	NA	neg	4	CO boiler
vacuum jets	12.4×10^6 bpd	57 lbs/10^3 bbl	≈57 lbs/10^3 bbl	neg	353	surface condenser, mechanical pump
blowdown	12.4×10^6 bpd	325 lbs/10^3 bbl	160 lbs/10^3 bbl	5 lbs/10^3 bbl	992	vapor recovery
asphalt blowing	0.65×10^6 bpd	60 lbs/ton asphalt	NA	neg	neg	incineration, scrubbing
process drains & wastewater separators	12.4×10^6 bpd	200 lbs/10^3 bbl	105 lbs/10^3 bbl	10 lbs/10^3 bbl	651	cover
pump seals	12.4×10^6 bpd	UD	17 lbs/10^3 bbl	UD	105	mechanical seals
compressor seals	12.4×10^6 bpd	UD	5 lbs/10^3 bbl	UD	31	mechanical seals
pressure relief valves	12.4×10^6 bpd	11 lbs/10^3 bbl	11 lbs/10^3 bbl	neg	68	rupture discs, vapor recovery
cooling tower	12.4×10^6 bpd	UD	UD	10 lbs/10^3 bbl[1]	62	housekeeping
pipeline valves & flanges	12.4×10^6 bpd	UD	28 lbs/10^3 bbl	UD	174	housekeeping, maintenance
blind changing	12.4×10^6 bpd	UD	0.3 lbs/10^3 bbl	UD	2	housekeeping, purging
sampling	12.4×10^6 bpd	UD	2.3 lbs/10^3 bbl	UD	14	housekeeping
other	12.4×10^6 bpd	UD	7 lbs/10^3 bbl	UD	43	housekeeping, maintenance
					5883 total	
Residual Fuels	2.8×10^6 bpd	neg		neg		
Natural Gas Liquids	1.73×10^6 bpd	NA	NA	NA		
Liquefied Petroleum Gases	1.41×10^6 bpd	NA	NA	NA		

TABLE 1.3-1 - SUMMARY OF CONTROLLED AND UNCONTROLLED HYDROCARBON EMISSIONS FROM THE PETROLEUM INDUSTRY (Cont.)

	1973 Throughput Rate	Emission Factors			Estimated 1973 Emissions (tons/day)	Comment on Control Device Applied
		Uncontrolled	Current Controls	Completely Controlled		
Gasoline Marketing						
bulk terminal						
storage	6.7×10^6 bpd	600 lbs/10^3bbl	NA	30 lbs/10^3bbl	101	floating roofs
loading	6.7×10^6 bpd	520 lbs/10^3bbl	NA	17 lbs/10^3bbl	57	bottom loading, vapor recovery
bulk station						
storage	1.1×10^6 bpd	600 lbs/10^3bbl	≈600 lbs/10^3 bbl	30 lbs/10^3bbl	330	floating roofs
loading	1.1×10^6 bpd	520 lbs/10^3bbl	≈520 lbs/10^3 bbl	17 lbs/10^3bbl	286	bottom loading, vapor recovery
service station						
filling underground tk.	6.1×10^6 bpd	11.5 lbs/10^3gal	≈ 9.4 lbs/10^3 gal	0.37 lbs/10^3 gal	1204	submerged fill, vapor balance
filling automobile	6.1×10^6 bpd	11.0 lbs/10^3gal	≈11.0 lbs/10^3 gal	1.10 lbs/10^3 gal	1409	vapor recovery, vapor balance
storage	6.1×10^6 bpd	1.0 lbs/10^3gal	≈1.0 lbs/10^3 gal	neg	128	vapor recovery
aviation gasoline						
storage	45×10^3 bpd	600 lbs/10^3bbl	600 lbs/10^3bbl	30 lbs/10^3bbl	14	submerged fill, vapor balance
loading	45×10^3 bpd	520 lbs/10^3bbl	520 lbs/10^3bbl	17 lbs/10^3bbl	12	vapor recovery
					3541 total	
Jet Fuel Marketing						
Jet Naphtha						
storage-breathing	≈6.7×10^6 bbl	0.074 lbs/d-10^3 gal ②	NA	0.02 lbs/d-10^3 gal ②	10	floating roofs
storage-filling	217×10^3 bpd	2.4 lbs/10^3gal	NA	neg	11	floating roofs
rail/truck loading	149×10^3 bpd	1.8 lbs/10^3gal	NA	0.91 lbs/10^3 gal	6	bottom loading
marine loading	27×10^3 bpd	NA	0.60 lbs/10^3 gal	0.60 lbs/10^3 gal	0	bottom loading already in use
Jet Kerosene						
storage-breathing	12.4×10^6 bbl	0.038 lbs/d-10^3 gal ②	≈0.038 lbs/d-10^3gal ②	0.009 lbs/d-10^3gal ②	10	floating roofs
storage-filling	833×10^3 bpd	1.0 lbs/10^3gal	≈1.0 lbs/10^3 gal	neg	17	floating roofs
rail/truck loading	90×10^3 bpd	0.88 lbs/10^3gal	≈0.88 lbs/10^3 gal	0.45 lbs/10^3 gal	2	bottom loading
marine loading	100×10^3 bpd	NA	0.27 lbs/10^3 gal	0.27 lbs/10^3 gal	1	bottom loading already in use
					57 total	
Diesel & Distillates						
storage-breathing	≈218×10^6 bbl	0.038 lbs/d-10^3 gal ②	≈0.038 lbs/d-10^3gal ②	0.009 lbs/d-10^3gal ②	174	floating roofs
storage-filling	3.08×10^6 bpd	1.0 lbs/10^3gal	1.0 lbs/10^3gal	neg	65	floating roofs
truck/rail loading	$.79 \times 10^6$ bpd	0.93 lbs/10^3gal	0.93 lbs/10^3 gal	0.48 lbs/10^3 gal	15	bottom loading
marine loading	$.30 \times 10^6$ bpd	NA	0.29 lbs/10^3 gal	0.29 lbs/10^3 gal	2	bottom loading already in use
					256 total	

① units in lb/10^3bbl of cat cracker capacity

② units in lb/10^3bbl of storage capacity

③ Emission factors for existing cooling towers were too variant to average. However emissions from recently constructed cooling towers are down to 10 lb/10^3bbl

NA - data not available
UD - emissions from this source were undefinable
neg- emissions are negligible

rates for 1973, with the estimated emission rates for that year, are also included. In addition, these throughput and production rates can be combined with the controlled emission factors to gage overall impacts of various control technologies.

1.4 Conclusions

The data indicate that there are three areas of the petroleum industry which generate large volumes of hydrocarbon emissions. Estimated emissions for the natural gas production and processing industry based on 1973 production rates were 6900 tons of hydrocarbons per day. Refinery operations contributed an estimated 5900 tons of hydrocarbons per day. Gasoline marketing operations contributed an estimated 3800 tons of hydrocarbons per day. For perspective, 1970 national hydrocarbon emissions totaled 90,000 tons per day and the total industrial contribution was 26,000 tons per day. It should be noted that while emissions from natural gas production and processing are quite large, they consist largely of methane, a photochemically non-reactive hydrocarbon.

The results indicate that emission control technology is generally well developed for every major hydrocarbon emission source in the petroleum industry.

The data presented in Table 1.3-1 also indicate that in nearly all areas of the petroleum industry, existing control technology has not been fully applied. The greatest progress towards full application of control technology has been made in those areas exhibiting economic incentives for control or in areas governed by emission regulations. Typical examples are volatile product storage where the petroleum industry is installing floating roofs for product conservation reasons, and gasoline marketing emission controls which have been applied in part because of emission regulations.

1.5 Recommendations

Although this study did not uncover any specific areas of the petroleum industry that demand development of new control technology, it did point out two areas where further development may be required. These areas are floating roof tanks and the service station portion of gasoline marketing.

The emission factors for completely controlled storage tanks indicate that the hydrocarbon emissions from storage tanks equipped with floating roofs will still be sizeable. For some locations with specific hydrocarbon problems, it may be necessary to improve floating roof seals or to develop other forms of emission control.

Although the technology for controlling hydrocarbon emissions from automobile refueling is well developed there remain several problems. Nozzle manufacturers have had difficulties designing a dispensing nozzle which consistently effects a good seal at the nozzle-fillneck interface. Problems have also arisen with the dependability and control efficiency of service station vapor recovery units.

In addition this study has pointed out some areas where very little is known about specific emission sources, their emission levels, and the efficiency of applicable control technology. By virtue of the significant quantities of emissions from the following such areas in the petroleum industry, further emissions investigation and testing appear needed in these areas:

- Oil and gas production - including wells, gathering stations, brine disposal, and gas plants.

Transport of crude liquids to refineries - including storage, loading, unloading, and intransport emissions from crude oil, lease condensate, and natural gas liquids.

Much of the available data on refinery emissions and the efficiency of their control is based on refinery studies conducted in the late 1950's and early 1960's. There exists the need to verify the applicability of these studies to current refinery emission sources and present day control techniques.

The impact of hydrocarbon emissions on health, air quality, and the environment vary greatly among hydrocarbon species. Many of the hydrocarbons emitted by the petroleum industry are low molecular weight, straight chain paraffins which are believed to be relatively non-reactive and non-hazardous. More information on the nature and impact of hydrocarbon emissions from petroleum industry sources is needed with respect to hazardous and photochemically reactive compounds; certainly where such data are needed for support of hydrocarbon emissions policies.

2.0 THE INDUSTRY

Definition

The petroleum industry encompasses a wide range of operations between the well and the point of product consumption. The first phase of the industry is production. Production includes locating and drilling oil wells, pumping and pretreating the crude oil, recovering gas condensate, and shipping these raw products to the refinery or to the consumer. The second phase, refining, extends through the separation, treating, and conversion of crude to finished salable products. The third and last phase of the petroleum industry is marketing, which involves the distribution and sale of finished petroleum products. These operations, their hydrocarbon emissions, and available controls for these emissions are discussed in this report.

Size

Data used in this report is based on 1973 figures. This is the latest year for which a complete set of statistics on the petroleum industry are available. In 1973 crude oil and lease condensate production averaged 9.2 million barrels per day, natural gas plant liquids production averaged 1.7 million barrels per day, and natural gas production averaged 65.9 billion SCF per day. The United States also imported 3.2 million barrels of crude per day in addition to 2.7 million barrels of finished products per day. Daily refining rates in 1973 averaged 12.4 million barrels per day. Domestic demand for refined products and natural gas liquids in 1973 averaged 17.3 million barrels per day. These statistics are expanded in Tables 2.0-1 and 2.0-2, and in Figure 2.0-1.

TABLE 2.0-1
PETROLEUM INDUSTRY
SUPPLY AND DISPOSITION OF PRODUCTS - 1973
(DAILY AVERAGES IN THOUSANDS OF BARRELS PER DAY)

SUPPLY		
Production		
Crude and lease condensate		9,187
Natural gas plant liquids		1,738
Imports		
Natural gasoline and plant condensate		103
Crude oil		3,244
Unfinished oils		137
Refined products		2,718
Other HC and hydrogen input		29
Unaccounted for crude oil		24
Processing gain		453
	TOTAL SUPPLY	17,633
	CHANGE IN STOCKS OF ALL OILS	-135
		17,498
DISTRIBUTION OF PRODUCTS		
Exports		
Crude oil		2
Refined products		229
Crude losses		13
Domestic use		17,254
	TOTAL DISPOSITION	17,498

Source: API, Annual Statistical Review, Petroleum Industry Statistics, 1964-1973. (AM-099)

TABLE 2.0-2

PETROLEUM PRODUCTS - 1973

(DAILY AVERAGES IN THOUSANDS OF BARRELS PER DAY)

Product	U.S. Production	Imports	Total New Supply	Change in Stocks	Exports	Domestic Use	Total Demand
Total Gasoline	6580	132	6712	-11	5	6718	6723
Motor	6535	132	6667	-10	4	6673	6677
Aviation	45	---	45	---	---	45	45
Kerosine	220	2	222	+6	---	216	216
Jet Fuel - Naptha type	181	36	217	-2	2	217	219
Jet fuel - Kerosine type	679	167	846	+10	3	833	836
Distillate Fuel oil	2822 + 2 Transfer	380	3204	+115	9	3080	3089
Residual Fuel Oil	971 + 17 Transfer	1827	2815	-5	25	2795	2820
Lubricants	188	6	194	-3	35	162	197
Other*	1854	37	1891	-17	123	1785	1908
NGL LRG	1738 375 >	234	2347	+41 --- >	27	1448 (831 Used at refinery)	2347

*Includes special napthas, wax, coke, asphalt, road oil, still gas, petrochemical feedstocks, miscellaneous.

Source: API, Annual Statistical Review, Petroleum Industry Statistics, 1964-1973. (AM-099)

FIGURE 2.0-1
PRODUCTION, TRANSPORT, AND USE OF CRUDE OIL AND PETROLEUM PRODUCTS-1973

(UNLESS OTHERWISE SPECIFIED, ALL FIGURES ARE DAILY AVERAGES IN THOUSANDS OF 42 GALLON BARRELS).

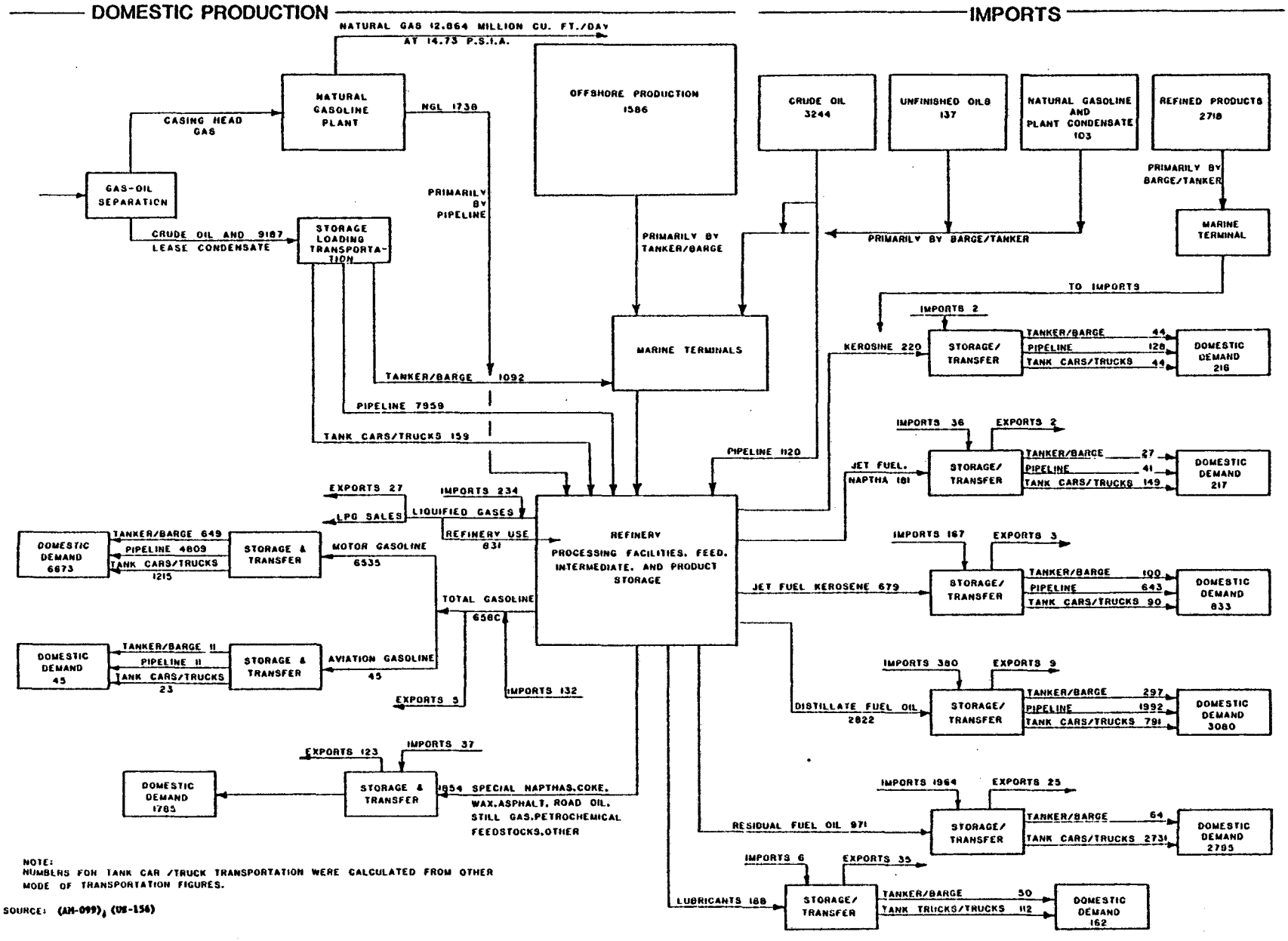

NOTE:
NUMBERS FOR TANK CAR /TRUCK TRANSPORTATION WERE CALCULATED FROM OTHER MODE OF TRANSPORTATION FIGURES.

SOURCE: (AM-099), (US-156)

Growth Trends

The high growth trends established by the petroleum industry in the late 1960's and early 1970's have been interrupted and are still fluctuating. Although predicting the future at this time is a difficult task, it appears that for the near future U.S. crude production will be declining 2% to 3% yearly while domestic petroleum demands and refining capacity will be increasing 2% to 3%. At this point, it is apparent that increased imports will be required. If more domestic refineries are added, the amount of imported crude oil can be increased; otherwise the increase will be as refined products processed outside the country. Only a few grass roots refineries have been completed in the last five years and there is no indication that the rate of adding new domestic refinery capacity will increase under current economic and political circumstances.

Emissions

The petroleum industry, because of the nature of its products, represents a very large potential source of hydrocarbon emissions. Hydrocarbon emissions are generated wherever volatile hydrocarbons contact the atmosphere. Sources of hydrocarbon emissions include storage tanks, loading operations, wastewater systems, catalyst regenerators, valve and fitting leaks, and emergency venting. Estimated hydrocarbon emissions for the petroleum industry in 1973 were 9100 tons/day for production and transportation of oil and gas, 5900 ton/day for petroleum refining, and 3900 tons/day for petroleum product marketing, making an industry total of 18,900 tons/day.

By way of comparison, nation-wide hydrocarbon emissions from transportation sources in 1970 averaged 53,400 tons/day, while hydrocarbon emissions from the petroleum industry totaled 21,300 tons/day. Total 1970 hydrocarbon emissions from all sources amounted to 95,600 tons/day (CA-102). Although petroleum industry emissions represent a large fraction (22%) of the nation's total hydrocarbon emissions, these hydrocarbons are composed largely of methane and other photochemically non-reactive hydrocarbons.

3.0 CRUDE OIL AND NATURAL GAS PRODUCTION

3.1 Domestic Oil Fields

3.1.1 Operations

In a producing oil well, there are three methods of bringing the oil to the surface: natural flow, gas lifting (injection of gas into the flowing column), and pumping. Most producing wells are operated by mechanical lifting methods using subsurface pumps of either a plunger or centrifugal type.

The production from each well is then sent to a complex gathering system which consists of pipes, valves, and fittings necessary to combine all of the production or to separate the individual well productions in the case of varying qualities. There are, in addition, test separators and tanks for testing the oil quality.

Separation-Water

Because crude oil is produced in association with gases and water (usually in the form of brine), it must then be treated to separate the crude oil from the other components. Dehydration or separation of oil from water is accomplished in two stages. Water which freely settles is drained at the wellhead or from the tanks at the gathering station to complete the first stage. Often water remains in the crude oil in the form of an emulsion which must be broken to remove the water. When this is the case, the emulsion moves to a dehydration plant. Emulsion-breaking is accomplished by adding a chemical destabilizer and/or heating in a heater treater. The emulsion may be broken

electrically by passing it between high voltage electrodes, or a combination of these methods may be used. The brine removed from the oil may be pumped into an open pond, treated, and used for repressuring or returned to an abandoned formation for disposal.

Separation-Gases

Separation of gases from the oil is often accomplished in the field at the gathering station. Vertical, horizontal, and spherical separators have specific advantages and may be used alone or in series. The oil from the separators is transferred to the field storage tanks. The gas from the separators may be transported to sales, transported to a natural gasoline plant, reinjected into the producing formation to maintain pressure, or (especially in remote areas) flared or vented.

The wet gas produced with crude oil is normally rich in recoverable hydrocarbon liquids. This hydrocarbon mixture is transported to a gas processing plant to separate the components. Alternatively, the wet gas may be shipped directly to a refinery for treatment. The dry gas obtained at the gas processing plant is shipped via pipeline to natural gas sales. The natural gas liquids obtained are stored in pressure tanks to await transportation to the refinery or are piped directly to fuel sales. The natural gasoline produced goes to the refinery for blending and for production of other chemicals.

Variations in the production sequence are found throughout the industry. Any step in the process may occur in the field, at the gathering station, or in the refinery. Local circumstances dictate specific procedures for individual production.

Secondary Recovery

To maintain production after reservoir pressures have dropped, secondary recovery methods are implemented. There are three general methods in use: waterflooding, gas injection, and thermal methods. In 1967, an estimated 33% of the oil production in the United States was by waterflooding. It has been further projected that by 1980 fifty percent of U.S. oil production will be by waterflooding (CH-182). Waterflooding consists of injection of water into the formation under pressure via injection well. Production water may be used, but it must first be treated to prevent corrosion and chemical deposition from occurring in pipes or machinery. Detergents are sometimes added to the water.

In the use of gas injection, gas is injected under high pressure via the injection wells to displace the crude out into the production well. The gas supply is often production gas.

Thermal methods of recovery include steam injection, hot water injection, or partial combustion. The increased temperature of the reservoir causes a reduction in viscosity and an increase in volume which results in increased oil recovery.

3.1.2 Products

There were 497,378 producing oil wells in the United States in 1973 which produced a daily average of 9.2 million barrels of crude oil (AM-099). Crude oil production results in three main hydrocarbon products: crude oil, dry natural gas, and natural gas liquids.

Crude Oil

Crude oil is composed chiefly of saturated hydrocarbons together with small amounts of organic compounds containing sulfur, nitrogen, and oxygen. A typical domestic crude oil contains 83-87% carbon, 11-14% hydrogen, 0.05-2% sulfur, 0.1-2% nitrogen and 0-2% oxygen (CH-182). Crude oils vary widely in appearance and consistency. They range from yellowish brown, mobile liquids to black, viscous semisolids depending on the molecular types and sizes of hydrocarbons present. Paraffin base crude oils contain mainly saturated straight-chain hydrocarbons; naphthene base crudes contain mostly saturated ring-type molecules; mixed base crude contain both straight-chain and cyclic saturated hydrocarbons and some aromatics.

Natural Gas

Natural gas is about 95% saturated hydrocarbons. The principal hydrocarbon is methane. Also present, in decreasing proportions, are ethane, propane, butanes, pentanes, hexanes, and heptanes. The remaining 5% is usually nitrogen, carbon dioxide, and sometimes hydrogen sulfide. After being processed to remove the natural gas liquids, the natural gas becomes dry natural gas and consists chiefly of methane. The heavier hydrocarbons are separated and/or liquefied to become ethane, natural gas liquids and natural gasoline.

In 1973 there were 763 gas-processing plants in operation which had a total capacity of 74.6 billion cubic feet per day and an average throughput of 55.6 billion cubic feet per day (FA-080). The average daily natural gas production for 1973 was 65.9 billion cubic feet per day with 12.9 billion cubic feet per day produced from oil wells (AM-099). These gas plants produced a daily average of 1.5 million barrels of natural gas liquids

and ethane and 151,000 barrels of debutanized natural gasoline (FA-080). Figure 3.1-1 illustrates the quantities of natural gas and natural gas products produced in 1973 on a daily average basis.

3.1.3 Storage and Handling

Crude oil is stored in welded tanks of high strength steel. These are usually vertical tanks with fixed or floating roofs. MSA estimated that in 1968 the storage capacity outside of refineries amount to 304 million barrels (MS-001). This figure includes field storage and storage at all points in the transportation of crude from the field to the refinery.

The natural gas liquids produced with the crude are handled as liquids and are stored in high pressure vessels, either horizontal cylinders or spheres. The liquids may also be stored under pressure in caverns in the earth's crust. Alternatively these products may be handled at lower pressures by reducing operating temperatures. Using this handling method the chilled liquids may be stored in lighter, insulated vessels above ground, or in frozen earth pits.

Natural gas may be stored underground in former production areas or in natural geological formations. The American Gas Association reports a capacity for storage of over six trillion cubic feet of natural gas in underground reservoirs (UN-016). Natural gas may also be cooled until it is liquid at which time it can be handled in appropriately insulated vessels lined with aluminum or stainless steel; however, this is a relatively expensive means of storage and handling, and has been used on a limited basis. Tankage may be above or below ground.

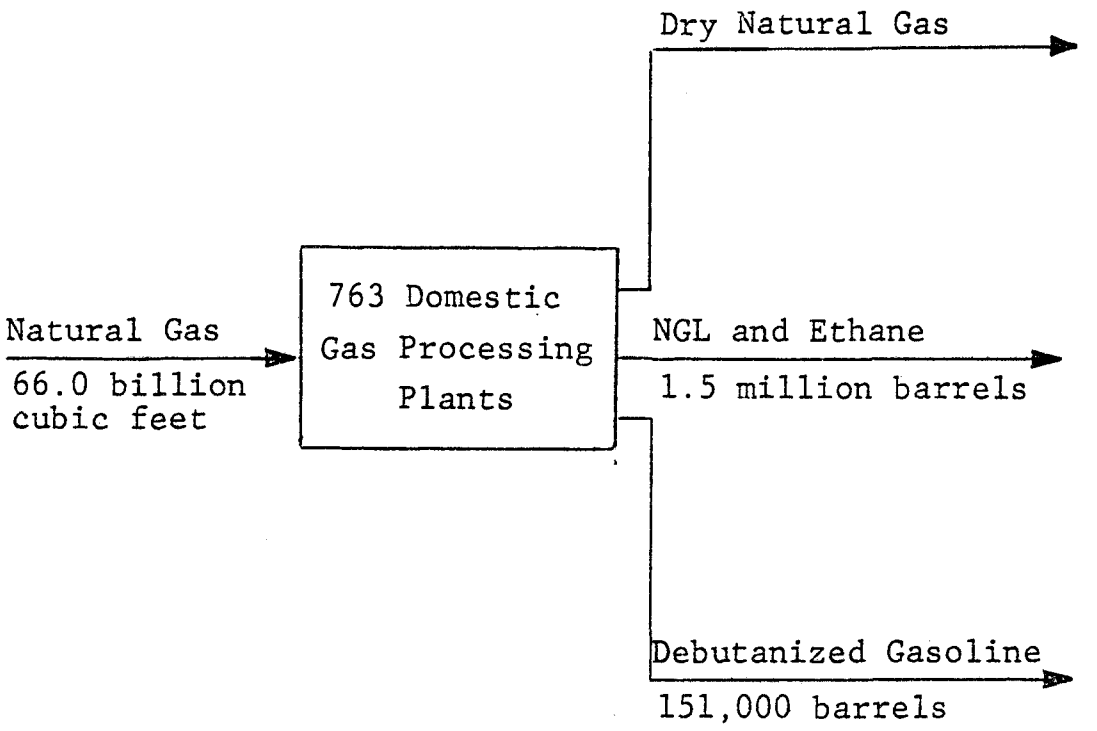

FIGURE 3.1-1

Production of Natural Gas and Natural Gas Products
(Daily Averages for 1973)

3.1.4 Emissions

The evaporative losses in production of crude oil result in emission of saturated hydrocarbons (the least photochemically reactive of the hydrocarbons), usually low molecular weight gases, which are associated with the crude oil.

In isolated areas where it may not be necessary or feasible to control emissions to the atmosphere, and where there may be no use for the gases separated from the crude or no economical method of transportation to a gas processing plant, the gases produced may be flared or even vented. An estimate for the quantities of hydrocarbons vented to the atmosphere was originally made by Processes Research, Inc., using data from the 1968 Minerals Yearbook. This estimate was revised by Radian using data from the 1972 Minerals Yearbook. The 1972 data shows 25 billion cubic feet of gas vented or flared and 45 billion cubic feet unaccounted for. The following assumptions were made in calculation of emissions.

(1) All unaccounted gas is lost to the atmosphere.

(2) Twenty percent of the vented and flared gas is emitted without burning.

(3) The emitted hydrocarbons have a density of 0.1 pound per cubic foot.

These figures lead to an estimated emission of 50 billion cubic feet per year lost to the atmosphere. This converts to 6,800 tons per day (PR-052).

There is a further emission potential in the storage tanks where the crude and natural gas liquids await transportation to the refinery. Light gases which have remained with the crude may be discharged to the atmosphere from a storage tank as a result of temperature changes, filling operations, and volatilization.

Field processes have a potential for emitting hydrocarbons to the atmosphere also. Oily brines produced with the crude oil are often pumped into open pits or tanks where oil collected on the top is skimmed off, or it may be left to evaporate if there is no use for the water recovered. Also, heat added in breaking of emulsions in the heater treaters has the potential for increasing hydrocarbon emissions because of the increased vapor pressure of the heated crude.

Pumps used in lifting the crude to the surface and for pumping the crude to the storage tanks are also sources of hydrocarbon emissions. The opening in the cylinder through which the connecting rod actuates the piston is the major potential source of contaminants from a reciprocating pump. Leakage occurs in centrifugal pumps where the drive shaft passes through the impeller casing.

Table 3.1-1 is from the MSA Study on Hydrocarbon Pollutants (MS-001). It lists production emissions for a specific area in California in 1968 with a total production of 18.5 million barrels of crude oil. These data emphasize the importance of emissions from pumps.

The MSA Study further estimated total hydrocarbon emissions from domestic crude oil production for 1968 as 220,000 tons/year.

TABLE 3.1-1

ESTIMATED HYDROCARBON EMISSIONS FROM CRUDE OIL PRODUCTION, MONTEREY COUNTY

1967

(Crude production of 18.5 million barrels per year)

	Hydrocarbon Emissions	
Point Source	Tons/Day	$lb/10^3 bbl$
Storage Tanks	0.1	3.9
Wastewater Separators	0.2	7.9
Pump Seals	1.9	75.0
Compressor Seals	0.1	3.9
Relief Valves	0.2	7.9
Pipeline Valves	0.3	11.8

3.2 Domestic Offshore

3.2.1 Operations

Offshore production operations are very similar to onshore operations with the added complications of space limitations, larger expenditures, and the generally hostile environment surrounding the fixed or floating platforms on which the work must be done. Offshore oil is brought to the surface by natural flow, gas lift, or pumping with subsurface pumps.

Processing

The crude is commonly sent to a central production platform via pipeline for processing in generally the same manner as onshore oil. Delivery to shore for processing is also a possibility, but the usual practice is the separation of gas and water from the oil on offshore installations. The water from the separators must then be cleaned before release to the ocean. If it is treated offshore to remove hydrocarbons, the oil must be stored in an already limited space. Because of confined operating conditions, the oily water may be delivered onshore for treatment at a conventional cleaning and dehydrating plant before release to the ocean. The gas is collected and dehydrated if there is a market for it. If the production is far removed from processing facilities, however, the gas is often vented or flared.

Secondary Recovery

Producing wells offshore are subject to the same secondary recovery methods as onshore wells. Secondary recovery offshore is more difficult because of the limitations on size and weight of compression and pumping equipment. If

necessary, the compression equipment can be installed on separate platforms to provide the services needed. In addition, direct-fired heating vessels must be avoided offshore for safety reasons; nonflammable heat transfer fluids are commonly used.

Controls and Safety

The same process steps are made offshore as onshore with the added general complication of the precarious positions of the men and machinery. These adversities necessitate elaborate control systems of safety valves and cut-off equipment integrated into the production equipment to handle the eventualities of mechanical failure or damage due to storms or shipping accidents. These control systems are often operated from onshore facilities or by remote control from other platform installations.

3.2.2 Products

The products from offshore installations are the same as those produced onshore: crude oil, natural gas, and natural gas liquids. The average daily production from offshore wells was 1.6 million barrels in 1973, or 17% of domestic production. These numbers should undergo a steady growth as exploration and production operations move further offshore.

3.2.3 Storage and Transport to Mainland

A great deal of reliance is placed on pipeline deliveries of offshore oil to onshore installations. Barges may be used for transport, but pipelines have the advantage of minimizing storage on offshore structures.

Offshore storage is used to a lesser extent in a few of the far-removed operations. As development proceeds farther from shore, more offshore storage will be utilized. The storage facilities vary in capacity from 10,000 barrels to one million barrels with a capacity of ten days of production an accepted minimum (EN-043). The storage facilities are classified in terms of their location in relation to the water level: elevated, floating, semisubmerged, submerged, and combination.

Elevated storage is located on a platform above the surface of the water, frequently on the same platform with production facilities. On deck storage in the Gulf of Mexico is usually limited to 10,000 barrels (EN-043).

Floating storage facilities consist of barges, tankers, and tanks having high positive buoyancy. Aside from regular barges and tankers used for storage purposes, barges built specifically for storage with capacities as high as 880,000 barrels of crude and with oil treating facilities on board are also being used.

Semisubmerged tanks, used in protected waters, are tanks moored in place which have a low positive buoyancy. Submerged storage tanks may be moored below wave action near the bottom, or they may have a negative buoyancy and be supported on the bottom. This type of storage tank is frequently equipped with above water structures for production support.

Combination storage facilities have their main storage facility submerged. The elevated tank normally has 10-30 percent of the submerged capacity and its primary purpose is to replace the subsurface ballast needed to maintain a negative buoyancy.

The offshore storage facilities may also serve as marine terminals for tankers whose sizes preclude their docking in conventional harbors. The oil is transported from the storage facilities to shore by pipeline, barge, or tanker to be stored before it is transferred to the refinery.

3.2.4 Emissions

The emissions to the atmosphere from offshore operations are generally comparable to those from onshore production presented in Table 3.1-1. These consist of saturated hydrocarbons, usually in the lower molecular weight range. The emissions come from venting excess associated gas and from evaporative losses in water treatment facilities, pumps, and storage tanks. In addition, there exists a higher potential for accidents, and, therefore, an increased possibility of spillage in offshore operations because of wave action, storms, and shipping mishaps.

As in onshore production of crude, the greatest emissions may be in remote areas where control or recovery of emissions may not be feasible or economical.

3.3 Emission Controls

Because the hydrocarbon emission sources found in crude oil production are very similar to those found in refining operations, the emission control measures outlined in Section 5.3 on refinery controls are directly applicable to the control of production emissions. The control efficiencies reported for refinery sources should also be directly applicable.

In brief, existing control technology for production emissions consist of the following:

Storage Facilities

- floating roof tanks or internal floating covers
- vapor recovery units

Wastewater Separators

- seal from atmosphere
- vent to vapor recovery
- floating covers

Pump and Compressor Seals

- convert packed seals to mechanical seals
- install double seals

Relief Valves

- upstream rupture discs
- vent to vapor recovery or flare

Pipeline Valves

- regular maintenance of stuffing boxes

Heaters and Compressor Engines

- carburetion adjustments

Miscellaneous Losses

- regular maintenance
- good housekeeping

4.0 CRUDE OIL TRANSPORT

4.1 Domestic Oil Fields and Refineries

4.1.1 Pipelines

The most important mode of transporting petroleum overland is the pipeline. The basic function of trunk pipelines in domestic oil fields is that of transporting crude oil from field storage to refinery storage. In 1973 a daily average of 8.0 million barrels of domestic crude moved to refineries through pipelines. This figure represented 87% of domestic production for that year (AM-099).

The first crude oil pipeline was built in 1865 in Pennsylvania. Since then the pipeline network has grown to thousands of miles. Pipelines have been enlarged from two inches in diameter lines carrying crude very short distances to lines of several feet in diameter which transfer multiple products hundreds of miles.

Pipeline Construction

Pipelines are constructed predominantly of special high strength steel but may be constructed of aluminum or plastic. The lengths of pipe are welded together one length at a time. Careful attention is given to the quality of weld at the joints. The welds are inspected not only visually, but also radiographically to detect any weaknesses. Valves and pumps are installed along the pipeline to control the flow of crude. Low viscosity oils, are generally pumped through the lines with centrifugal pumps, while higher viscosity oils are pumped with positive displacement pumps, usually high speed, multistage reciprocating types.

Before the pipelines are buried, they are wrapped with a protective coating to prevent corrosion of the outside of the pipe. The pipe may also be equipped with cathodic protection. Internal corrosion is a problem only in those lines carrying crudes containing sulfides.

Nearly all of the existent pipelines are laid below grade. Subsurface installation protects them from weather and from accidental damage by earth-moving equipment. Offshore pipelines are laid in trenches on the floor of the sea to guard against damage by wave action, storms, and shipping accidents.

Pipeline Operations

A dispatcher coordinates operations of the pumping stations and storage tanks to move oil through the lines on schedule. The dispatching orders govern starting and stopping of units, pressure changes, valve regulation, tankage utilization, and oil sampling from a central, remote location. A good communication system is essential, and computer controlled operations are now common.

4.1.2 Domestic Tanker Transport

Although the United States pipeline system is extensive, it is sometimes necessary and economical to transport crude by barge or tanker to refineries in certain parts of the country. Many refineries are located on navigable waters and operate docks for receiving or shipping oil by tanker or barge. Tankers of many sizes transport crude oil and products in coastal traffic and over inland waterways. The United States has 12,000 miles (EN-045) of coastline and 25,000 miles (AM-155) of navigable inland waterways, and, therefore, offers a large potential for domestic traffic by water.

Tanker and barge movements of crude oil for several recent years are shown in Table 4.1-1 in daily averages of thousands of barrels. Crude transported by water is usually moved by pipeline from the point of production to the point of water shipment.

The tankers involved in these short trips are small "handy-tankers" which can maneuver well in restricted areas such as docks and loading facilities. These versatile vessels have an average capacity of 35,000 deadweight tons (DWT).

The barges used for transport of crude oil are called tank barges. They are designed to carry liquid products in bulk and are powered by towboats or tugboats.

4.1.3 Other Transport Methods

Other forms of crude transport are railway tank cars and tank trucks. These are less commonly used methods, but they are necessities in some areas. The daily average of crude transported to the refineries by tank car and tank truck in 1973 was 159,000 barrels, or about 2% of the domestic production. Tanks mounted on truck bodies or rail cars are constructed of mild steel or aluminum. They are usually fitted with openings for filling on top and discharge openings on the bottom. They may also be fitted with heating coils and pumps for discharging highly viscous crudes. The tanks are generally cylindrical in shape and are as large as state highway departments and railroads will allow. Loading and unloading is accomplished through flexible hoses to and from loading racks at the storage facilities.

TABLE 4.1-1

TANKER AND BARGE MOVEMENTS OF CRUDE OIL
(in thousand barrels per day)
(AM-099)

	1971	1972	1973
Gulf Coast to East Coast	565	292	155
Gulf Coast to Mid-West	50	50	28
Gulf Coast to West Coast	--	2	--

4.2 Imported Crude

Imports of crude oil for 1973 averaged 3.2 million barrels per day. This figure constituted a 46 percent increase of crude imports over 1972 figures. Table 4.2-1 provides an illustration of the rate of growth of crude imports over the past years.

TABLE 4.2-1

CRUDE OIL IMPORTS
(in thousands of barrels per day)
(AM-099)

1968	1969	1970	1971	1972	1973	1974*	1975**
1290	1409	1324	1680	2216	3244	3500	3830

* Preliminary ** January

Tanker Capacities

A large percentage of the imports must, of necessity, be transported over the ocean in marine tankers. As more and more oil has been transported from the lesser developed countries to the highly industrialized nations, the world tanker fleet has grown in numbers and in capacity. In 1950 tankers totalled 25.3 million deadweight tons (DWT); by 1972 tanker tonnage came to 183.2 million DWT. The average size tanker increased in the same time period, growing from 12,000 DWT to 58,000 DWT. The largest tanker in use in 1950 was under 25,000 DWT, but in 1972 the largest tanker in use was in excess of 300,000 DWT, and vessels of 540,000 DWT were under construction (PR-074).

The increasing emphasis on large carriers results from the favorable economics of carrying large loads on long trips.

Tankers are large vessels especially constructed to carry products in bulk. They differ from other vessels in their method of handling and storing their cargo. The cargo is pumped aboard by shore pumps through pipelines connected to the internal piping of the tanker and is stored in the cargo holds, separated by bulkheads into a series of tanks. The cargo is discharged by the reverse process, with the ship's pumps furnishing the power to move the cargo through pipelines into storage tanks ashore. The loading and unloading time is kept to a minimum. Figure 4.2-1 is a diagram of a typical tanker and its cargo disposition.

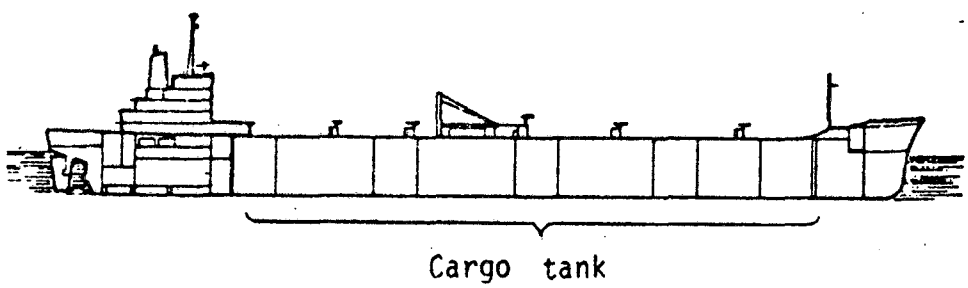

FIGURE 4.2-1

Marine Tanker

The existing United States ports are unable to accommodate the large "supertankers." This fact has necessitated loading and unloading at offshore anchorages. The oil may be loaded and unloaded via submarine pipeline to the shore. It may also be handled in an offshore storage facility with later transport to shore by smaller tankers and barges.

4.3 Intermediate Storage, Processing, and Handling

Crude oil is handled in a virtually closed system except for points of transfer. Crude is supplied to refineries through a transportation system which includes tank farms, bulk terminals, and other storage points connected by overland and water transportation systems. Figure 4.3-1 illustrates the relative sizes of systems involved in transporting crude oil to refineries.

4.4 Emissions

The hydrocarbons emitted in transferring crude to the refinery are mostly low molecular weight saturated hydrocarbons. If the oil transportation system is open to the atmosphere at any point, dissolved light gases will be lost.

Storage

As in every other phase of production, storage tanks are potential sources of emission. An MSA Research Corporation study on hydrocarbon pollutants included an estimated 470,000 tons of hydrocarbon emissions from crude storage tanks outside of the refinery for the year 1968. This amounted to about 3.1 million barrels for the year, or 8,600 barrels per day (MS-001). This is roughly 0.1 percent of the domestic crude oil production. For comparison the hydrocarbon emissions from crude storage within the refinery were estimated as 2.2 million barrels for the same year.

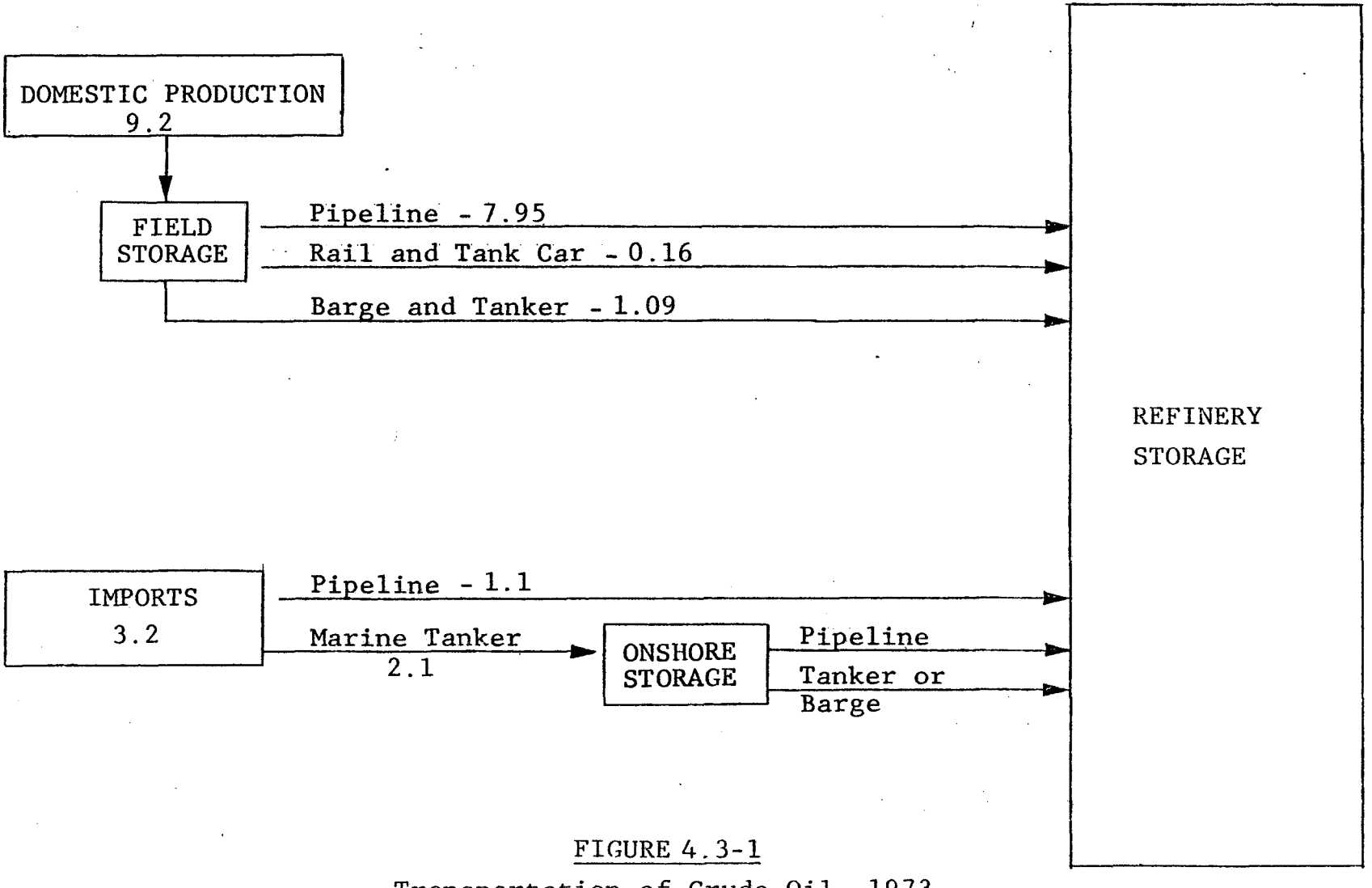

FIGURE 4.3-1

Transportation of Crude Oil, 1973

(Rates in millions of barrels per day)

Pipelines

Pipelines are subject to losses caused by corrosion damage or accidents. Spills account for only a small percentage of the quantity of products carried, but the volume of products carried is very large. Data from Environmental Conservation (EN-043) for 1968 showed that of 6.5 billion barrels of petroleum products carried, six thousandths of one percent was spilled. This amounted to 390,000 barrels of petroleum and products spilled.

Data for 1970 show that 90 percent of pipeline failures occur within the line pipe itself. The major cause of line failure is corrosion, which accounted for 42.8 percent of the mishaps, while another 20.2 percent was caused by outside forces, such as earth moving equipment (EN-043). Of the pipeline failures reported in 1970, 62.2 percent involved crude oil pipelines (EN-043).

There are other sources of emissions in pipeline systems such as valves, pumps, flanges, and other fittings. Even small leaks in the many fittings and pumping equipment may result in sizable emissions because of the large volumes transported through the pipeline network.

Tank Cars and Tank Trucks

Most evaporation from tank cars and tank trucks occurs during loading operations. The tanks are usually filled from the top by either subsurface loading or splash loading methods. Subsurface loading is accomplished by extending the loading line to the bottom of the container in order to discharge the product below the surface of the liquid soon after the start of the operation. This method eliminates much of the evaporation loss

due to spraying the crude through the air space. Splash loading is accomplished by a short loading pipe which allows the product to fall through the tank vapor space thereby increasing the hydrocarbon concentration vapor space. When the tanker is filled, the liquid displaces the vapors inside the compartment to the atmosphere; consequently, the concentration of hydrocarbons in the vapor space becomes important.

These displaced vapors contain a mixture of hydrocarbons and air, the concentration of hydrocarbons depending on the type of oil being loaded, the method of loading, and ambient temperature and pressure. Tables 4.4-1 and 4.4-2 contain data from loading tests conducted to determine losses encountered in the two types of loading (AM-085). Comparison of the tables shows a trend toward larger losses due to splash loading. The average vapor saturation for subsurface loading is 6.43% resulting in an average loss of 0.03%. The average vapor saturation for splash loading is 24.2% resulting in an average loss of 0.18%. Assuming 75% of the tanks are loaded by the subsurface method and 25% are loaded by the splash method, and using the average volume of crude transported in this method per day, the emissions from this source were calculated to be an average of 110 barrels per day.

Marine Facilities

Evaporation losses from marine vessels occur during all phases of the transportation cycle. In loading operations, marine tankers are filled from the bottom through fill pipes which are integral parts of the carriers. This method of loading creates the least amount of turbulence and results in the least amount of vaporization. An equation has been published by API (based on a relatively small amount of data) which can be used to find a rough estimate of loading emissions: Percent loss is equal to about 0.008 times TVP (true vapor pressure)

TABLE 4.4-1

SPLASH-LOADING-LOSS TESTS FOR TANK CARS (CRUDE OIL)

Test No.	Geographical Location	Daily Mean Temperature (Deg F)	Month	Weather Condition	Loading Conditions: Spout Location (Inches Below Hatch)	Loading Conditions: Vapor Saturation (Per Cent)	Loading Conditions: Stock: Deg F[d]	Loading Conditions: Stock: RVP[e]	Loading Conditions: Stock: TVP[f]	Loading Conditions: Fill Rate (Gallons per Minute)	Load (Gallons)	Loss (Per Cent)	Test Method
1	Midland, Texas	63	Feb.	Clear	—	5.0	56	5.5	2.8	176	8,097	0.14	Vapor analysis[b, c]
2	Midland, Texas	63	Feb.	Cloudy	—	113.0[a]	55	5.5	2.8	215	10,214	0.16	Vapor analysis[b, c]
3	Midland, Texas	63	Feb.	Clear	—	61.3	60	5.5	3.0	203	8,106	0.12	Vapor analysis[b, c]
4	Midland, Texas	63	Feb.	Clear	—	14.2	58	5.5	2.9	206	10,073	0.21	Vapor analysis[b, c]
5	Midland, Texas	63	Feb.	Cloudy	—	13.6	48	7.5	3.8	196	8,213	0.25	Vapor analysis[b, c]
6	Midland, Texas	63	Feb.	Cloudy	—	3.4	49	7.5	3.9	280	10,090	0.32	Vapor analysis[b, c]
7	Midland, Texas	63	Feb.	Cloudy	—	26.5	50	7.5	4.0	172	8,078	0.23	Vapor analysis[b, c]
8	Midland, Texas	63	Feb.	Cloudy	—	19.5	51	7.5	4.0	148	8,106	0.26	Vapor analysis[b, c]
9	Midland, Texas	63	Feb.	Clear	—	15.0	59	7.5	4.7	300	8,063	0.17	Vapor analysis[b, c]
10	Midland, Texas	63	Feb.	Cloudy	—	18.4	51	7.5	4.0	256	10,205	0.22	Vapor analysis[b, c]
11	Midland, Texas	63	Feb.	Night	—	15.1	52	7.5	4.1	188	8,155	0.25	Vapor analysis[b, c]
12	Midland, Texas	63	Feb.	Night	—	12.1	51	7.5	4.0	271	8,105	0.17	Vapor analysis[b, c]
13	Jefferson, Texas	79	June	Clear	—	11.2	80	7.2	6.3	168	8.081	0.15	Vapor analysis[b, c]
14	Jefferson, Texas	79	June	Clear	—	22.6	84	7.2	6.8	137	8,192	0.14	Vapor analysis[b, c]
15	Jefferson, Texas	79	June	Clear	—	24.2	83	7.2	6.7	172	8,237	0.20	Vapor analysis[b, c]
16	Jefferson, Texas	79	June	Clear	—	31.0	81	7.2	6.4	142	10,214	0.15	Vapor analysis[b, c]
17	Jefferson, Texas	79	June	Clear	—	30.0	92	2.7	2.5	—	8,077	0.06	Vapor analysis[b, c]
18	Jefferson, Texas	79	June	Clear	—	0	92	2.7	2.5	153	8,128	0.06	Vapor analysis[b, c]

[a] Theoretically could not exceed 100 per cent.

[b] Vapor-analysis method via air-balance technique. Vapor samples aspirated from dome of car; air content determined by Orsat analysis.

[c] Insufficient information to determine extent of interaction between oxygen (O_2) and hydrogen sulfide (H_2S) and the error resulting therefrom.

[d] Temperature of the crude stock being loaded.

[e] Reid Vapor Pressure.

[f] True Vapor Pressure.

TABLE 4.4-2

SUBSURFACE-LOADING-LOSS TESTS FOR TANK CARS (CRUDE OIL)

Test No.	Geographical Location	Daily Mean Temperature (Deg F)	Month	Weather Condition	Loading Conditions: Vapor Saturation (Per Cent)	Stock: Deg F[c]	Stock: RVP[d]	Stock: TVP[e]	Fill Rate (Gallons per Minute)	Load (Gallons)	Loss (Per Cent)	Test Method
1	Midland, Texas	63	Feb.	Clear	8.9	56	5.5	2.8	181	10,100	0.03	Vapor analysis[a, b]
2	Midland, Texas	63	Feb.	Cloudy	2.6	55	5.5	2.8	176	8,104	0.01	Vapor analysis[a, b]
3	Midland, Texas	63	Feb.	Clear	2.5	58	5.5	2.9	171	6,475	0.03	Vapor analysis[a, b]
4	Midland, Texas	63	Feb.	Cloudy	3.5	48	7.5	3.8	217	10,203	0.01	Vapor analysis[a, b]
5	Midland, Texas	63	Feb.	Cloudy	5.7	49	7.5	3.9	240	8,126	0.02	Vapor analysis[a, b]
6	Midland, Texas	63	Feb.	Cloudy	0	50	7.5	4.0	195	9,912	0.05	Vapor analysis[a, b]
7	Midland, Texas	63	Feb.	Clear	19.5	51	7.5	4.0	160	6,374	0.05	Vapor analysis[a, b]
8	Midland, Texas	63	Feb.	Night	4.8	51	7.5	4.0	200	7,975	0.07	Vapor analysis[a, b]
9	Midland, Texas	63	Feb.	Night	10.4	52	7.5	4.1	203	10,175	0.02	Vapor analysis[a, b]

[a] Vapor-analysis method via air-balance technique. Vapor samples aspirated from dome of car; air content determined by Orsat analysis.

[b] Insufficient information to determine extent of interaction between oxygen (O_2) and hydrogen sulfide (H_2S) and the error resulting therefrom.

[c] Temperature of the crude stock being loaded.

[d] Reid Vapor Pressure.

[e] True Vapor Pressure.

(AM-085). Using an average true vapor pressure for crude of 4.00 psia (AM-085), the loss would be about 0.032 percent of the domestic crude transported by barge or tanker or about 349 barrels per day emitted as loading losses. As the data for unloading losses and transit losses were sparse, estimates for these have not been developed (AM-085).

4.5 Emission Controls

Many of the hydrocarbon emission sources outlined above are very similar in nature to the hydrocarbon emission sources found in refinery operations. For this reason, the refinery emission control measures detailed in section 5.3 should be directly applicable to crude transportation emission sources. Loading losses are best controlled by converting to bottom loading and by installing vapor recovery units to process the displaced vapors. Pipeline valve, flange, and fitting leaks can be minimized by regular maintenance of packed seals and gaskets. Converting from packed seals to mechanical seals in addition to installing double seals will reduce compressor and pump leaks.

Hydrocarbon emissions unique to the transportation industry and not found in refineries are in-route evaporation losses. However, these emissions and those from storage tank are similar. If control is required on rail car and tank truck emissions, partial control can be effected by equipping the tanks with pressure/vacuum valves which retain minor vapor expansions and contractions. Barge and tanker emission controls consist of venting vapor expansions to an on-board vapor recovery system which reliquefies the vapors by refrigeration, compression, absorption, and/or adsorption. Pressure/vacuum valves can also be applied to barge and tanker storage for minimizing the quantity of vapors processed in the vapor recovery unit.

5.0 PETROLEUM REFINERIES

Petroleum refining is the third largest industry in the United States and represents a potential hydrocarbon emission problem by virtue of the large quantities of petroleum liquids refined and the intricacy of the refining process. This section defines the refining industry, sources of hydrocarbon emissions within refineries, and control methods applicable to refinery hydrocarbon emissions.

5.1 The Industry

5.1.1 Statistics

Generally each petroleum refinery is a unique hybrid whose design is determined by the local market demands and the characteristics of the crude being processed. However, refineries normally can be classified into one of the following five basic refinery types.

- Topping - primary operation is separation of crude into its major fractions but may include some hydrotreating.

- Topping and Cracking - operations not only include crude separation but also include conversion and cracking processes for maximization of gasoline product.

- Topping, Cracking and Petrochemical - some petrochemical processing is performed in addition to cracking, conversion, and topping operations.

Integrated - lube oil, wax, and asphalt processing is integrated into topping, cracking and conversion processing.

- Integrated and Petrochemical - petrochemical manufacturing is combined with the refining operations of an integrated refinery.

Approximately 28% of the refineries in the U.S. are topping and cracking refineries, 20% are topping, cracking, and petrochemical refineries, and 20% are integrated refineries.

As of January 1, 1974, there were 247 operating petroleum refineries in the U.S. with a total crude capacity of 14,200,000 b/d (AN-089). Individual refinery capacities range from 1,000 b/d to 445,000 b/d. The ten largest refineries comprise over 25% of the nation's capacity (EN-043). Table 5.1-1 presents a distribution of the refinery sizes for 1971 (EN-043). There is a trend with time toward larger and fewer refineries.

TABLE 5.1-1
REFINERY SIZE DISTRIBUTION - 1971

Refinery Capacity	% of Total Refineries	% of Total Refining Capacity
<70,000 b/cd	75.9	28.4
70,000-200,000 b/cd	19.0	41.6
>200,000 b/cd	5.1	30.0

Many larger refinery complexes are situated adjacent to petrochemical complexes to facilitate exchange of products and by-products. This trend is also encouraged by municipalities granting tax incentives for locating in industrial parks. In

1967 over 50% of the nation's refining capacity was located in 100 large metropolitan areas (FO-001). Table 5.1-2 presents the national refinery distribution by states in 1974 (AN-089). The highest concentrations of refineries are along the Gulf Coast, the West Coast, the midwest, and the Philadelphia-New Jersey area. Refineries located near large metropolitan areas and petrochemical complexes pose significant hydrocarbon emissions problems.

TABLE 5.1-2

DISTRIBUTION OF REFINERY LOCATIONS (1974)

State	Refining Capacity (b/cd)	% of National Capacity	
Texas	3,733,000	26	51%
California	1,809,000	13	
Louisiana	1,667,000	12	
Illinois	1,152,000	8	35%
Pennsylvania	690,000	5	
New Jersey	619,000	4	
Ohio	572,000	4	
Indiana	551,000	4	
Oklahoma	481,000	3	
Kansas	402,000	3	
Washington	347,000	2	
Mississippi	290,000	2	

Although the uncertainties of government action and the economy make trend predicting difficult, refinery production trends are expected to reflect the national goals of self sufficiency, resourcefulness, and conservation. The high yearly production increases of 5% in the late 60's and early 70's may never be seen again. Current estimates are that yearly production increases for the next few years are expected to remain at approximately 2%-3% (AN-089).

5.1.2 Refining Processes

It is difficult to characterize the refining processes applied by a so called "typical" refinery because of the wide variety of refining schemes and processes available to the refiner. Because of the emphasis today on gasoline, a fully integrated gasoline refinery will be used in the example of a typical refinery. This section contains a brief description of the commonly used refinery process units. Their relationship in the overall refining scheme is shown in Figure 5.1-1 (RA-119), the flow scheme of a fully integrated gasoline refinery designed to maximize the production of motor gasoline.

Atmospheric and Vacuum Distillation

Crude petroleum is a mixture of many different hydrocarbon compounds. These compounds are distinguished by their hydrocarbon type and by their normal boiling temperatures. The hydrocarbon types include paraffins, olefins, naphthenes, and aromatics, and the normal boiling temperatures encompass a range that exceeds 1000°F for most crudes. In crude oil refining the first processing step is the physical separation of the crude oil into these fractions of specific boiling temperature range. This separation is performed in the atmospheric distillation unit and in the vacuum distillation unit.

Within the atmospheric distillation process, desalted crude is first charged to a direct-fired furnace where sufficient heat is supplied to achieve partial vaporization of the crude petroleum. Next both the liquid and vaporized portions are charged at atmospheric pressure to the atmospheric fractionator. The crude charge is separated into several petroleum fractions within the atmospheric fractionator. A naphtha and lighter stream is taken at the tower overhead and several liquid side-stream

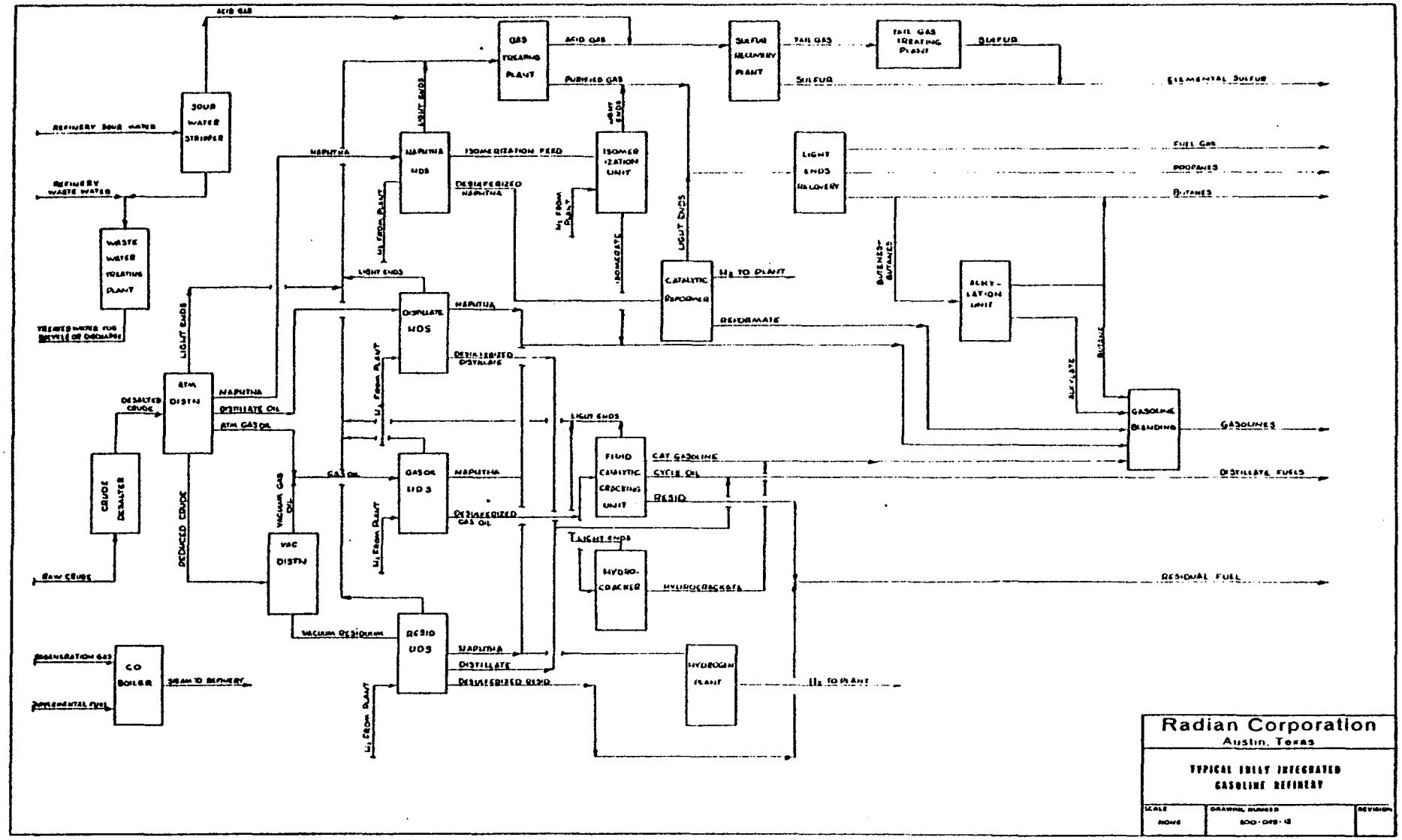

FIGURE 5.1-1

Typical Fully Integrated Gasoline Refinery

fractions are withdrawn from the fractionator at different elevations within the tower. These side-stream fractions are stripped of residual light ends and then charged to hydrotreating processes. From the fractionator bottom is drawn the heaviest petroleum fraction (reduced crude) which is the charge to the vacuum distillation unit.

Vacuum distillation receives its name from the subatmospheric operating pressure of the fractionation tower(s) employed. The purpose of vacuum distillation is to separate heavy petroleum distillates from reduced crude (atmospheric distillation tower bottoms). Vacuum fractionation with steam stripping is employed to avoid excessive temperatures that would be encountered in producing these heavy distillates by atmospheric fractionation.

In the vacuum distillation process reduced crude is first heated in a direct-fired furnace to a predetermined temperature of approximately 730-770°F. The hot oil is then charged to the vacuum unit for separation of distillates from the charge stock. Vacuum residuum is recovered as the fractionator's bottoms product. Vacuum fractionators are maintained at approximately 100 mm Hg absolute pressure by either steam ejectors or mechanical vacuum pumps.

Hydrocarbon emission sources associated with distillation units include vacuum jets with barometric condensers, process heaters, and fugitive sources.

Gas Treating and Light Ends Recovery

Light ends from atmospheric distillation and other refinery units contain a variety of acid gas species as well as

light hydrocarbons. These acid gas species consist primarily of hydrogen sulfide, but also include mercaptans, carbonyl sulfides, and carbon disulfide. Acid gases are formed during refinery operations from sulfur contained in the crude oil.

Acid gases are generally removed from the light ends stream in a gas treating unit by absorption with an aqueous regenerative sorbent. A number of gas treatment processes are available, and they are distinguished primarily by the regenerative sorbent employed. Amine-based sorbents are most commonly used, however.

Within the gas treatment process, impure refinery light ends are charged to an absorption tower for vapor-liquid mass transfer with the amine solution. H_2S is absorbed by the amine solution in a reversible reaction. Purified refinery gas is yielded as the absorption tower overhead product. This gas may be further processed in light end recovery processes, or it may be charged as a raw material to other refinery or petrochemical processes. Sorbent rich in H_2S from the absorption tower bottoms is charged to a reactivator for regeneration. Here, the absorption reaction is shifted and H_2S is stripped from the sorbent. Concentrated acid gas removed in the reactivator is normally charged to a sulfur plant for recovery of the contaminated sulfur. Lean sorbent from the reactivator bottoms is recycled to the absorption tower to complete the cycle.

Sweetened light ends from the gas treating plant are subsequently processed in the light ends recovery unit. Light ends recovery involves the separation of refinery gases into individual component streams. The separation is normally accomplished by absorption and/or distillation.

The methane through propane fractions can be used as refinery fuel, sold as products, or used as feedstock for ethylene units. The butane fraction can be sold as product, blended into motor gasoline, or routed to alkylation units.

Hydrocarbon emissions from gas treating and light ends recovery are primarily attributable to fugitive leaks of the highly volatile light ends.

Conversion Processes - Alkylation, Reforming, Isomerization

There are three conversion processes normally applied in gasoline refineries for converting low octane products to high octane products. These are alkylation, reforming, and isomerization.

Alkylation is the process whereby an olefin (propylene, butylene, etc.) and an isoparaffin (normally iso-butane) are catalytically reacted or combined to produce a high octane component known as alkylate for gasoline blending. The two major types of alkylation processes for refinery application utilize liquid catalyst of either sulfuric acid (H_2SO_4) or hydrofluoric acid (HF). The mechanism of alkylation is essentially the same for both processes; however, they differ somewhat in the process flow scheme. Both processes are being built in new and existing refineries.

In the alkylation unit, olefin and isoparaffin feedstocks are mixed with the liquid catalyst in a reaction vessel. The alkylation reaction takes place at modest pressures and temperatures. After reaction the alkylate and catalyst phases are separated in a settler. The catalyst is recycled to the reactor.

Isomerization units are used to increase the octane rating of pentane and hexane fractions by catalytically rearranging the normal paraffins into isoparaffins. The feedstocks to isomerization units are desulfurized and dehydrated straight chain pentane and hexane fractions normally from the naphtha HDS unit. The product from isomerization is a low sensitivity gasoline blending stock consisting of up to 75% isomers and having a clear research octane number of 80 to 85.

In the isomerization unit desulfurized, dehydrated C_5-C_6 feedstock is mixed with hydrogen, heated to reaction temperature, and mixed with HCl. This mixture passes over a catalyst in a hydrogenation reactor where benzene and olefins are hydrogenated, and then passes on to the isomerization reactor. In the isomerization reactor the feed contacts a chlorinated platinum-aluminum-oxide catalyst which isomerizes the C_5-C_6 normal paraffins into C_5-C_6 isoparaffins. Effluent from the isomerization reactor is cooled and passed to a high pressure separator where recycle hydrogen is withdrawn. Separator liquid passes to a stripper column where it is stripped of recycle HCl, and then passes through a neutralization vessel. The neutralized product is routed to gasoline blending.

Catalytic reforming processes convert low octane naphthas into high octane naphthas by catalytically rearranging naphthenes and paraffins, forming benzene, toluene, and xylene. The high octane aromatic products are used in gasoline blending and as feedstocks to aromatic plants.

Within the catalytic reformer the naphtha feedstock from the naphtha HDS unit is first mixed with hydrogen under pressure and heated in a series of heat exchangers to reaction temperature. The mixture then passes through a series of furnaces and fixed bed catalytic reactors. In the catalytic

reactors, the paraffins and naphthenes are dehydrogenated to form higher octane aromatics with some hydrocracking reactions occurring to convert higher boiling paraffins to lower boiling higher octane material. Reactor effluent, after passing through a bank of heat exchangers, enters into a separator where a hydrogen-rich gas is withdrawn and recycled. Liquid from the separator is taken to a fractionator and split into a light ends stream containing C_1-C_4 and into a reformate stream containing the aromatics, paraffins, and naphthenes. The reformate product is routed to gasoline blending.

In many refineries a liquid-liquid aromatic extraction unit is incorporated within the catalytic reforming unit. The aromatic extraction unit separates the reformate stream into a raffinate stream containing the non-aromatics and an extract stream containing 95% aromatics.

Hydrocarbon emissions from conversion processes can be attributed to process heaters, fugitive emissions from the units under pressure, and fixed bed catalyst regeneration.

Hydrodesulfurization Units

Hydrodesulfurization is becoming widely practiced in modern refineries for the desulfurization and denitrification of naphtha, distillate, and residual feedstocks. The demand for low sulfur products in conjunction with the susceptibility of some catalysts to sulfur and nitrogen poisoning necessitates the removal of sulfur and nitrogen from naphtha, distillate, and residual feedstocks. Normally petroleum fractions are treated separately because of the varying sulfur limits placed on various fuels and because of the wide range of catalysts and reactor conditions required to treat the various petroleum fractions.

Within the hydrodesulfurization unit, feedstocks from the atmospheric and vacuum distillation columns are mixed with fresh and recirculating hydrogen and heated to reaction temperature. The mixture then passes into a fixed-bed reactor where it contacts a non-noble metal catalyst. In the reactor, organic sulfur and nitrogen complexes are broken and hydrogenated to form H_2S and NH_3. Depending on the severity of the reactor conditions, there will also be some cracking of the feedstock into lighter fractions. Reactor effluent is cooled and then split in a series of flash drums into a recycle hydrogen stream, a sour light ends stream and a desulfurized product stream. The sour light ends are routed to the gas treating unit. Desulfurized product is sent to product storage or provides a feedstock for downstream processing units.

Because of the high temperatures and pressures required in desulfurization processes, leaks of volatile hydrocarbon are prevalent, and maintenance is difficult. In addition to fugitive sources, hydrocarbon emissions are also attributable to intermittent catalyst regeneration and to handling of oily condensates from the steam strippers.

Cracking

The purpose of cracking is to convert heavy distillate oils into petroleum fractions of lower boiling range and of correspondingly lower molecular weight. Feedstocks to the process are typically gas oils which may or may not have been desulfurized. Cracking performed in a hydrogen atmosphere with a fixed bed is termed "hydrocracking" and cracking performed without hydrogen addition and with a moving or fluidized bed is termed "catalytic cracking."

In catalytic cracking, preheated feedstock is contacted with the catalyst in either a fluidized bed or a moving bed

reactor. Catalytic cracking occurs in the reactor. The syncrude product is withdrawn from the reactor and separated in a fractionation tower. Spent catalyst coated with coke and other impurities is continuously withdrawn from the reactor and charged to the regenerator. Regeneration is achieved by controlled combustion of the coke that has accumulated on the catalyst. Recycle of the hot regenerated catalyst to the reactor completes the catalyst loop.

In the hydrocracking process the feedstock is first mixed with hydrogen and recycle unconverted product. The mixture is heated, then contacted with catalyst in a fixed bed reactor at a specified hydrogen partial pressure. Reactor design may be either one or two stage. Within the reactor the feedstock is catalytically cracked and hydrogenated, forming primarily saturated isoparaffins and naphthenes, plus some aromatics. The hydrocrackate product from the reactors is fed to a series of separators and fractionators for separation into a recycle hydrogen stream, desired product streams, and a recycle unconverted product stream. The hydrocracking catalysts must be regenerated regularly to remove coke and impurities. The regeneration is achieved by controlled combustion in a batch operation.

Hydrocarbon emissions from cracking operations are primarily generated in the catalyst regenerators. Other sources of emissions include process heaters, handling of oily condensates, and fugitive sources.

Alternative Vacuum Resid Processes

There are several alternative vacuum resid processes open to the refiner which are used in place of or in conjunction with resid hydrodesulfurization. The selection of these

processes is dependent on both refinery needs and market demands, but the list basically includes solvent deasphalting, coking, partial oxidation, and asphalt stills.

In solvent deasphalting, a solvent such as pentane or propane is used to extract heavy oil fractions from asphalt in vacuum resids. The deasphalted oil is suitable for heavy fuel oil or feedstock to lube processing.

Asphalts and coke from solvent deasphalting can be fed to partial oxidation units where they are partially oxidized in the presence of steam and oxygen to yield hydrogen, low Btu fuel gas and hydrocarbons.

The coking process severely cracks vacuum tower bottoms in a thermal cracker to produce coke, a light naphtha, and light ends. The naphtha fraction is routed to gasoline blending and the light ends is treated in the gas treating plant.

High quality asphalt is produced from vacuum tower bottoms by processing in asphalt stills. Within the asphalt still, air is blown through the vacuum tower bottoms at an elevated temperature, stripping off lighter hydrocarbon fractions and dehydrogenating the remaining fractions. The dehydrogenating reaction yields water and a highly polymerized asphalt.

Because of the generally low volatility of the products handled in vacuum resid processes, fugitive emissions are not a serious problem. The largest potential hydrocarbom emission sources are asphalt air-blowing and coker off gas.

Lube Processing

Lube processing units for the refining of vacuum distillation cuts into lube oils, waxes, and greases are included in several refineries. Because the demand for lube products is very small in comparison to the demand for liquid fuels, refiners tend to consolidate their lube processing units into only a few refineries. Lube processing units consist primarily of lube hydrotreating, solvent extraction, and grease manufacturing.

Hydrocarbon emissions from lube processing are generally attributed to air-blowing and fugitive losses of refining solvents.

5.1.3 Refinery Products

National average production rates of major refining products are presented in Table 5.1-3. Generally, however, national production rates fluctuate seasonally by several percentage points depending upon seasonal demands. Gasoline production is highest during the summer vacation months and fuel oil production is highest during the cold winter months. In relating the products in Table 5.1-3 to Figure 5.1-1, motor gasoline, aviation gasoline, and jet naphthas are produced in the gasoline blending unit while kerosenes and diesel fuels are included in the distillate fuels stream. Lubricants and other miscellaneous products are unique to each refinery and are therefore omitted from the "typical gasoline refinery" depicted in Figure 5.1-1.

Although the national ratio of gasoline production to fuel oil production was 48% to 27%, the ratio of refinery

TABLE 5.1-3

PETROLEUM PRODUCT RATE - 1973

(Daily Average Production in Thousands of Barrels)

Product	Production	%
Motor Gasoline	6,535	47
Aviation Gasoline	45	--
Kerosine	220	2
Jet Naphtha	181	1
Jet Kerosine	679	5
Distillate Fuel Oil	2,822	20
Residual Fuel Oil	971	7
Lubricants	188	1
LPG (C_2, C_3, and C_4)	375	3
Other (special naphthas, wax, coke, asphalt, road oil, still gas, petrochemical feedstocks)	1,854	13
TOTAL	13,870	99

products is quite variable among refineries depending on the composition of the crude and the processing objectives of the refinery. Products from refineries dedicated to maximizing gasoline may consist of 70% gasoline and 25% fuel oil. On the other hand, products from a refinery dedicated to fuel oil production may consist of only 25% gasoline and up to 70% fuel oil.

5.1.4 Auxiliary Processes

There are several important auxiliary processing units which are included in most refineries but which are not considered part of the refining process. These units are employed for such functions as the treatment of waste streams, the supply of plant utilities, and the handling of products. Auxiliary units are important as potential sources of emissions and are described here in general terms.

Crude Desalting

The first unit in an oil refinery is normally a crude desalting unit which removes inorganic salts and brines from the incoming crude. If not removed, these inorganic salts can cause: (1) fouling of process equipment; (2) equipment corrosion due to the formation of HCl; and (3) catalyst poisoning by metallic salts.

In a typical electrostatic crude desalting unit the unrefined crude oil is heated to give it suitable fluid properties. Then fresh water is added to dissolve and absorb impurities from the crude. To assure intimate mixing between the crude and the fresh water, an emulsion is formed by passing the two through an emulsifier. Next the water-oil emulsion passes into a treating vessel where a high voltage field demulsifies the

oil and water mixture. The impurities from the crude oil are removed in the water effluent and the clean desalted crude oil is ready for subsequent refining.

Chemical crude desalting is a little used alternative to electrostatic crude desalting, and employs coalescing agents instead of a high voltage field to demulsify the aqueous and organic phases.

Crude desalting units are generally not considered a significant hydrocarbon emission source. However, in addition to fugitive emissions there potentially are hydrocarbon emissions from handling oily aqueous wastes.

Sulfur Recovery Plant and Tail Gas Treatment

Sulfur recovery involves conversion of the hydrogen sulfide (H_2S) in acid gases into elemental sulfur. The concentrated acid gas streams charged to the recovery plant are from (1) the refinery gas treating plant and from (2) the sour water stripper.

The Claus process is the most widely accepted sulfur recovery system in the refining industry. In the process concentrated acid gas is first combusted with a sub-stoichiometric air supply to S, SO_2 and H_2O. Additional sulfur recovery is obtained in a series of catalytic reactors where SO_2 formed in combustion reacts with remaining H_2S to form sulfur and H_2O. The number of reactors determines the degree of conversion. Unconverted acid gas leaves in the tail gas stream and is often treated in a tail gas treatment unit before release to the atmosphere.

Treatment of sulfur plant tail gas serves to reduce atmospheric emissions and is expected to become a standard refinery process as air quality requirements become more stringent. Seven processes employing varying principles are presently operating or are installed in processing plants. At the moment it is difficult to determine which of the processes will prove most effective. The charge to these processes is tail gas directly from the Claus unit. In addition to reducing atmospheric emissions, some candidate treatment processes recover a salable product such as sulfur, sulfuric acid, etc.

Normally there are no significant hydrocarbon emissions associated with the sulfur recovery unit or the tail gas treatment plant.

Hydrogen Plant

Hydrogen is consumed in many refinery processes including hydrodesulfurization, hydrocracking, isomerization, and others. Catalytic reforming yields hydrogen for refinery consumption; however, an additional source is often required to meet a refinery's hydrogen demand. The hydrogen plant serves to fill the gap between a refinery's hydrogen supply and demand.

Hydrogen plants utilize steam-hydrocarbon reforming to produce hydrogen. In a typical steam-hydrocarbon reforming process, hydrocarbons (which may range from methane to residual oils) and steam are catalytically reacted in a high-temperature reactor to form hydrogen and carbon monoxide. The high temperature is maintained by direct heating. These reaction products are cooled by quenching and carbon monoxide further reacts with water to form hydrogen and carbon dioxide. Carbon dioxide is removed from the hydrogen in an amine absorption unit and carbon monoxide is methanated by reaction with hydrogen.

Oily condensates, fugitive sources, and fired heaters are potential hydrocarbon emission sources associated with hydrogen production.

Blending and Storage

Refinery blending operations involve the mixing of various components to achieve a product of desired characteristics. The most common blending operation in petroleum refining involves the final step in gasoline manufacturing. Gasoline components such as cat gasoline, reformate, alkylate, isomerate, butane, lead, dye, etc., are mixed in a proportion to meet gasoline marketing specifications. Blending is commonly accomplished in a mixing manifold.

Storage capacity is required at refineries for the blended products as well as for liquid feedstocks, intermediate products and other finished products. Storage capacities vary among refineries but generally range from one to two months for feedstocks and products. Normally included in storage facilities are loading and unloading facilities. Although a majority of the feedstocks and products are transported by pipeline, some material is transported by tank trucks, rail tank cars, and marine vessels. Loading facilities are made up of loading arms, hoses, couplings and nozzles for the taking up and dispensing of petroleum liquids.

Blending and storage operations potentially represent the largest single source of hydrocarbon emissions from refineries.

Sour Water Stripper

Sour water stripping units are used in refineries to remove hydrogen sulfide and ammonia from sour waste waters. The two product gas streams from the stripping unit are 99+% pure hydrogen sulfide and ammonia, and the water effluent contains only trace amounts of hydrogen sulfide and ammonia.

In a typical sour water treatment unit degassed sour water feed is passed through a feed heater into a reboiler stripper column where hydrogen sulfide is stripped overhead while water and ammonia flow out the column bottoms. The hydrogen sulfide overhead is high purity and directly suitable as sulfur plant feed. The hydrogen sulfide stripper bottoms are fed into a second reboiler stripper column which produces a clean water bottoms and an ammonia overhead product. After further processing to remove small amounts of hydrogen sulfide and water the ammonia product is salable as anhydrous liquid ammonia.

Since sour water stripping units are enclosed systems, hydrocarbon emissions are limited to very minor fugitive leaks.

Waste Water Treatment Plant

The purpose of a waste water treatment plant is to upgrade the quality of water effluents so that they can be safely returned to the environment, or reused within the refinery. The design of waste water treatment is complicated by the diverse range of refinery pollutants, including oil, phenols, sulfides, dissolved solids, suspended solids, toxic chemicals, and BOD-bearing materials. The four basic phases of waste water treatment are inplant pretreatment, primary treatment, secondary treatment, and tertiary treatment.

Although most of the oil entering with the waste water is removed by API separators, residual hydrocarbons remain dissolved in the waste water. Due to the high air-water contact occurring in waste treatment processes, these dissolved hydrocarbons are emitted to the atmosphere.

Utility Steam Boilers

Refineries generally include a steam plant to supply their utility steam requirements. Conventional boilers are employed and normally fired with either refinery fuel gas, vacuum resid, or one of the product fuel oils. Utility steam demands for a refinery are approximately 40 lbs/bbl at pressures ranging from 150 to 600 psig.

Hydrocarbon emissions resulting from incomplete fuel combustion are common in boiler flue gases.

5.2 Hydrocarbon Emission Sources

Hydrocarbon emissions vary greatly from one petroleum refinery to another depending on such factors as capacity, age, crude type, processing complexity, application of control measures, and degree of maintenance (EN-043). National surveys in 1968 indicated that refinery hydrocarbon emissions totaled 1.7×10^6 tons/year. The ratio of hydrocarbon emissions to refinery feed, ranged from 0.07 wt% to 0.87 wt% on an individual refinery basis and averaged 0.1 wt% across the country (MS-001).

Because refineries are a complex collection of integrated processing units, the pinpointing of individual hydrocarbon emission sources would be an extensive task. This section attempts to characterize and where possible to quantify the hydrocarbon

emissions from major sources within a typical refinery. These emission sources are grouped into combustion sources, tankage and loading sources, process sources, and fugitive sources.

5.2.1 Combustion Sources

A typical petroleum refinery has several major combustion sources which include process heaters, boilers and compressor engines. Hydrocarbons are emitted from these sources due to incomplete fuel combustion. Sources such as flares and flue gas incinerators are treated as control devices and discussed in Section 5.3 on emission controls.

Process Heaters

Process heaters are used extensively in refining operations to heat and thermally crack feed streams prior to separation and treating processes. They are the largest combustion source of hydrocarbon emissions in refineries. Table 5.2-1 summarizes the heater demand of some typical refining units (RA-119). The total process heater demand for a modern refinery is approximately 270 x 10^6 Btu/1000 bbl of refinery feed (RA-119). However, the process heater demand for older, less efficient refineries may reach 600 x 10^6 Btu/1000 bbl of refinery feed (MS-001).

The fuel to process heaters can be any one of several hydrocarbon streams in the refinery, but is generally either residual fuel oil, refinery fuel gas, or a combination of the two. A refinery survey in California reported the process heater emissions listed in Table 5.2-2 (AT-040). The heating values of these fuels are included (EN-071).

TABLE 5.2-1

HEAT DEMAND OF SOME TYPICAL REFINING UNITS

SOURCE

Heaters and Furnaces	Heat Demand (10^3 Btu/bbl of unit feed)
distillation unit	100
naphtha HDS unit	25
distillate HDS unit	55
gas oil HDS unit	55
residual HDS unit	64
isomerization unit	68.4
reformer	258
reformate extraction	190
catalytic cracking	154
hydrogen plant	166
alkylation unit	244
Total for modern refinery	265 10^3Btu/bbl refinery feed

TABLE 5.2-2

HYDROCARBON EMISSIONS FROM

REFINERY BOILERS AND HEATERS

Fuel	Hydrocarbon Emissions	Heating Value
Refinery fuel gas	0.03 $lb/10^3scf$	1050 Btu/scf
Distillate fuel oil	140 $lb/10^3bbl$	5.9×10^6Btu/bbl
Residual fuel oil	140 $lb/10^3bbl$	6.3×10^6Btu/bbl

Refineries in the future may elect to fuel process heaters with unrefined vacuum resid, a low grade of fuel which can produce slightly greater hydrocarbon emissions than refined fuel oils.

Boilers

Most refineries include steam boilers in their processing units to supply their process and utility steam requirements. Major sources utilizing steam are light ends strippers, vacuum steam ejectors, process stream exchangers, and reactors. The steam demand for a typical gasoline refinery is approximately $40 \times 10^3 lb/10^3bbl$ of refinery feed. This equates to a boiler size of $53 \times 10^6 btu/10^3bbl$ of refinery feed.

As with process heaters, refinery boilers are fueled with the most available fuel source, generally refinery fuel gas or residual fuel oil. Hydrocarbon emissions from refinery boilers were found in a refinery survey to be the same as hydrocarbon emissions from process heaters (AT-040). These emissions are reported in Table 5.2-2.

Refinery boilers are often partially fueled with catalytic cracker regenerator flue gas as a means of controlling carbon monoxide in the regenerator flue gas, in addition to recovering the heating value of carbon monoxide. When this is done, the hydrocarbon emission contribution of the boiler fuel is not expected to change significantly.

Compressor Engines

Many older refineries use internal combustion engines fired with refinery fuel gas to run high pressure compressors because refinery fuel gas has traditionally been a cheap, abundant source of energy. Examples of refining units operating at high pressures include the hydrodesulfurization, isomerization, reforming, and hydrocracking units. Hydrocarbon emissions from internal combustion engines fired with refinery fuel gas are approximately 1.2 lbs/10^3 scf fuel (MS-001). A survey of hydrocarbon emissions from compressor engines at refineries in 1968 indicated that the national average emissions from compressor engines were 16 lbs/10^3 bbl refinery feed (MS-001).

5.2.2 Storage and Loading Sources

The high volatility of feedstocks, intermediates, and products stored and loaded in refinery tank farms makes them one of the largest potential hydrocarbon emission sources in the refining industry. Because most products and feedstocks are transported by pipeline, storage losses are greater than loading losses.

Types of Storage Tanks

There are five basic types of storage tanks used by refineries. These include fixed roof, floating roof, internal floating cover, variable space, and pressure. The application of these tanks largely depends on the volatility of the stored liquid.

The fixed roof tank is the least expensive and the most common type of tank used. It is a cylindrical steel tank with a conical steel roof (Figure 5.2-1). Today fixed roof tanks are normally equipped with pressure/vacuum valves set at only a few inches of H_2O to contain minor vapor volume expansion.

Floating roof tanks are cylindrical steel tanks similar to fixed roof tanks (Figure 5.2-2). However, instead of a fixed roof, they are equipped with a sliding roof, designed to float on the surface of the product. A sliding seal attached to the roof seals the annular space between the roof and vessel wall from product evaporation. Floating roof tanks eliminate the vapor space of fixed roof tanks.

Internal floating covers are a modification of floating roofs, designed to deal with the buoyancy problems caused by snow and rain (Figure 5.2-3). They are essentially fixed roof tanks equipped with an internal floating cover similar to a floating roof. Internal floating covers contain sliding seals to seal the annular space between the cover and the vessel wall from evaporation.

There are two basic types of variable vapor space tanks. These are shown in Figures 5.2-4 and 5.2-5. The lifter roof tank has a telescopic roof, free to travel up and down as the vapor space expands and contracts. A second type is the

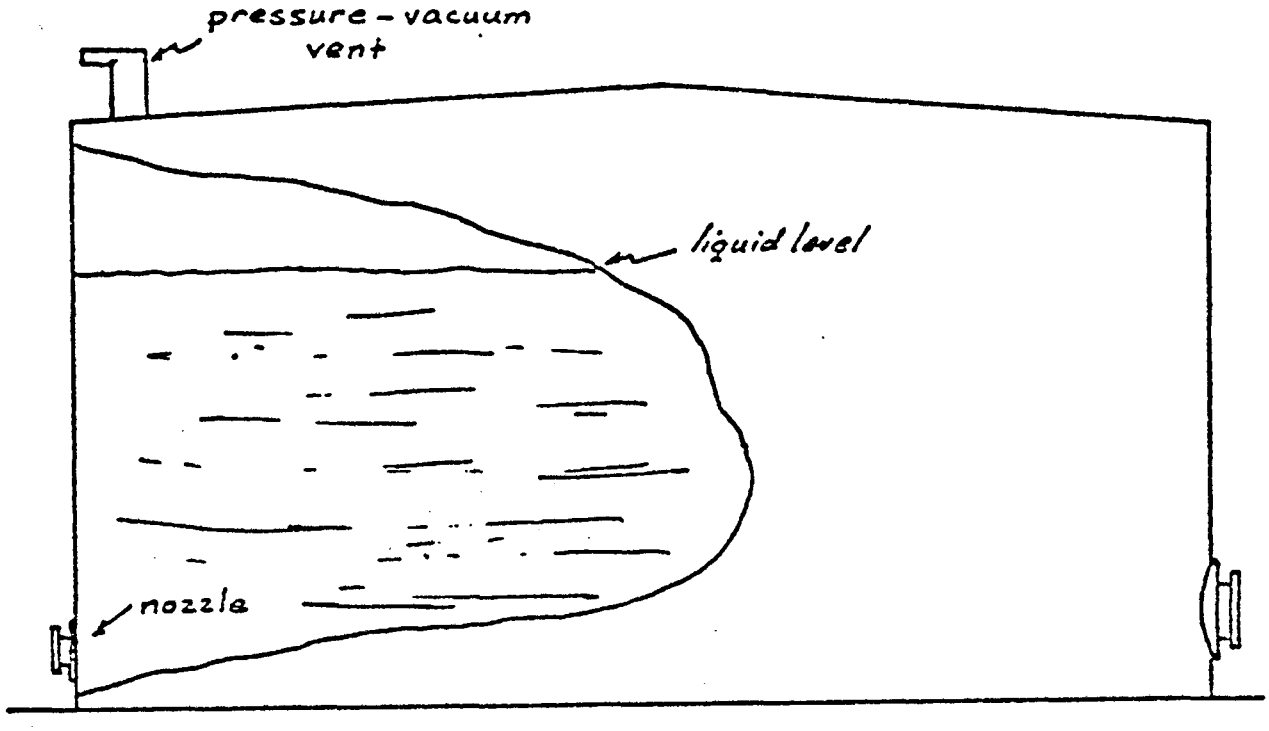

FIGURE 5.2-1
Standard Fixed Roof Tank

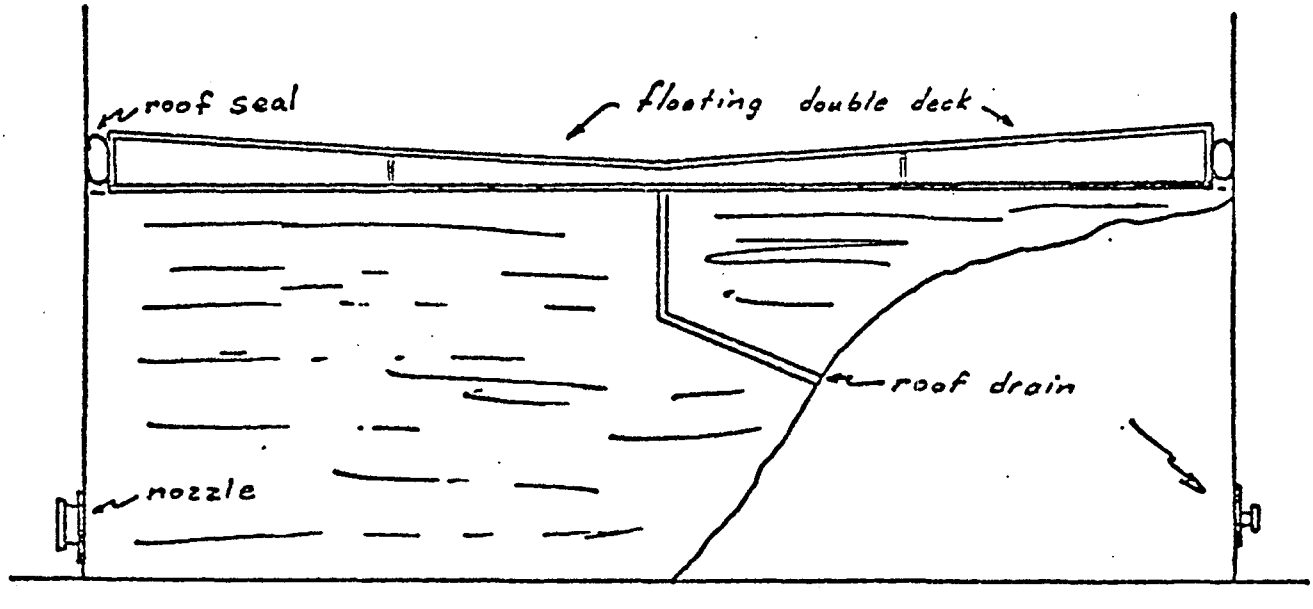

FIGURE 5.2-2
Floating Roof Tank - (double deck type)

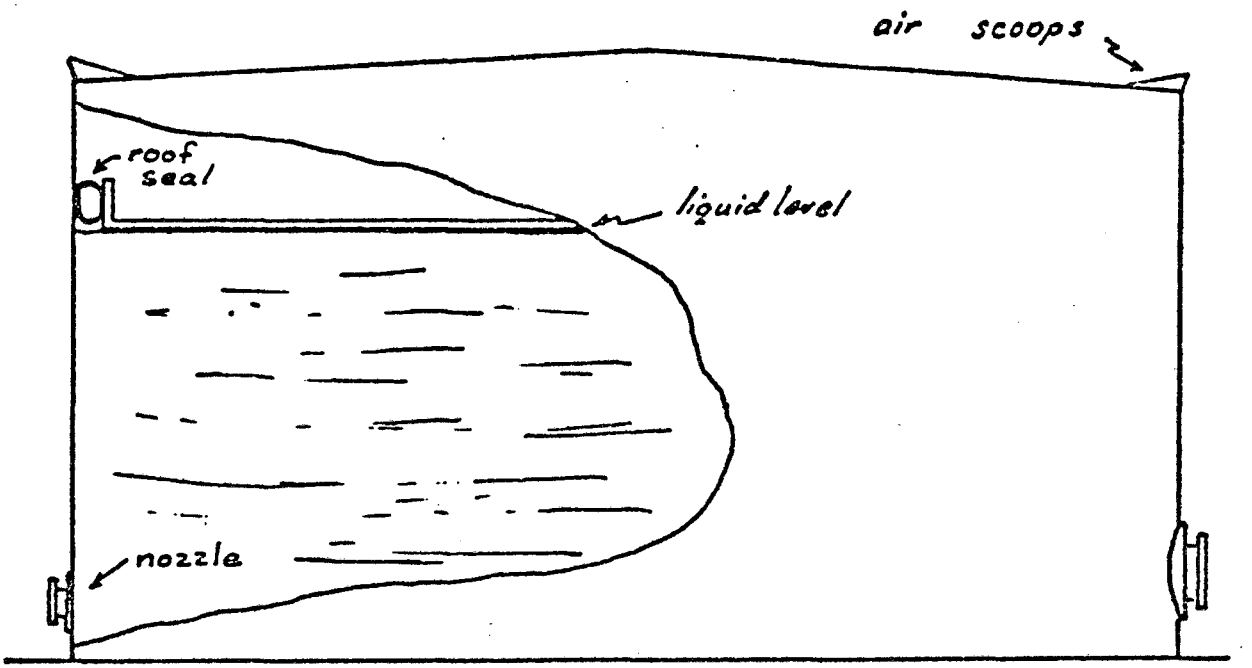

FIGURE 5.2-3

Internal Floating Cover Tank

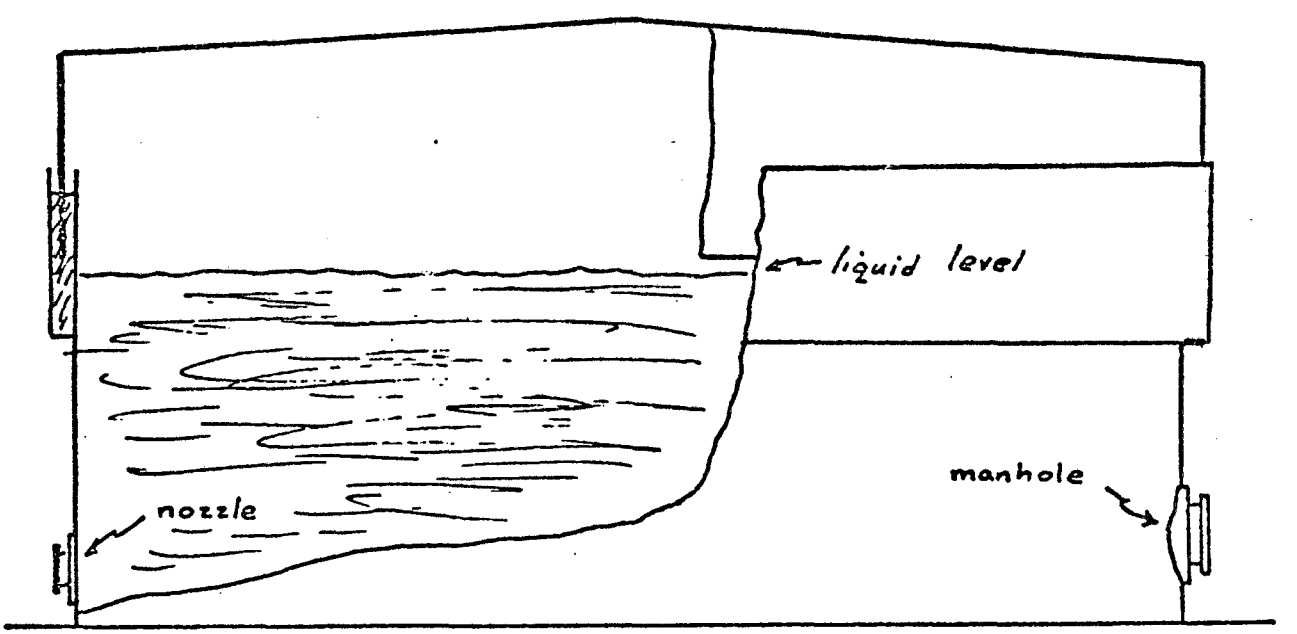

FIGURE 5.2-4

Lifter Roof Tank

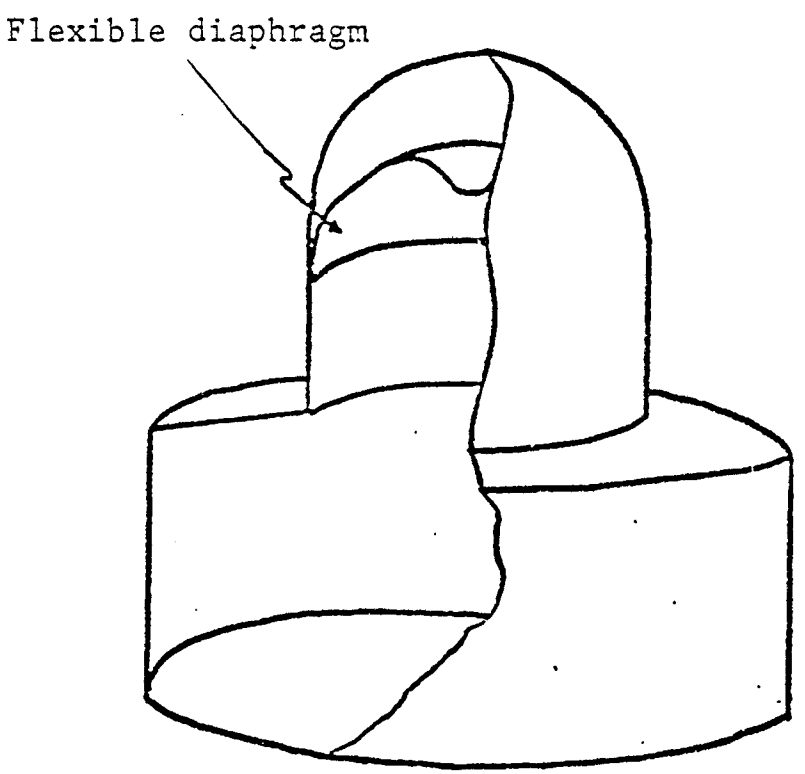

FIGURE 5.2-5
Flexible Diaphragm Tank

diaphragm tank equipped with an internal flexible diaphragm to cope with vapor volume changes.

Pressure tanks are used to store highly volatile products. These tanks come in a very wide range of shapes and are designed to eliminate evaporation emissions by storing the product under high pressures. Pressure tanks are commonly designed for pressures up to 200 psig.

Fixed roof, floating roof, and internal floating cover tanks are the most common tanks in refinery service. These tanks range in size from 20,000 to 160,000 bbl and average 70,000 bbl (MS-001).

Nature of Product Storage

Table 5.2-3 indicates the vapor pressures (EN-043), volumes (MS-001), and types of storage tanks used for several major refinery products. Federal emission regulations currently require hydrocarbon products with true vapor pressures (under storage temperatures) ranging from 1.5 to 11.1 psia be stored in floating roof tanks or their equivalent. Normally internal floating covers are considered equivalent to floating roof tanks.

Mechanism of Storage Losses

Evaporation loss is the natural process whereby a liquid is converted to a vapor which subsequently is lost to the atmosphere. Evaporation occurs whenever a volatile hydrocarbon is in contact with a vapor space or the atmosphere. There are six basic kinds of evaporation loss from petroleum storage: breathing, standing storage, filling, emptying, wetting, and boiling.

TABLE 5.2-3

NATURE OF PRODUCT STORAGE AT REFINERIES

Product	True Vapor Pressure psia @ 60°F	Types of Storage Tanks	Qty. Stored 1968 (10^6bbl)
Fuel Gas	--	Cryogenic - Pressurized	
Propane	105	Pressurized	
Butane	26	Pressurized	
Motor Gasoline	4-6	Vapor Saver, Fixed Roof, Floating Roof	204
Aviation Gasoline	2.5-3	Vapor Saver, Fixed Roof, Floating Roof	14
Jet Naphtha	1.1	Vapor Saver, Fixed Roof, Floating Roof	18
Jet Kerosene	<0.1	Fixed Roof	31
Kerosene	<0.1	Fixed Roof	46
No. 2 Distillate	<0.1	Fixed Roof	346
No. 6 Residual	<0.1	Fixed Roof	
Crude Oil	2	Vapor Saver, Fixed Roof, Floating Roof	137

• Breathing losses occur when vapors are expelled from a storage tank because of temperature and/or barometric pressure changes. Standing storage losses are those resulting from leaks around hatches, relief valves, and floating roof or floating cover seals. Filling losses occur when vapors are displaced to the atmosphere as a result of tank filling. Vapor expansion subsequent to product withdrawal is termed emptying loss and is due to saturation of newly inhaled air. Wetting losses are attributed to the vaporization of liquid from wetted tank walls exposed when a floating roof or floating cover is lowered by liquid withdrawal. Boiling losses occur when vapors boil off stored liquid.

The major source of hydrocarbon emissions from fixed roof tanks are breathing and filling losses, while the major source of emissions from floating roofs and internal floating covers is standing storage losses. Depending on auxiliary vapor recovery equipment, vapor saver tanks may or may not be subject to filling losses.

Quantification of Storage Emissions

Storage emissions at refineries depend on several major factors, including liquid vapor pressure, diurnal temperature changes, schedule of tank fillings and emptyings, solar radiation absorption of tank, and mechanical condition of the tank, seals, and fittings. The American Petroleum Institute and other groups have developed extensive formulas for calculating tank emissions including the above parameters. However, due to the variability in location, tank design, and operation of refineries the definition of a characteristic refinery for purposes of calculation does not seem warranted. Emission factors developed for the simplification of estimation of tankage emissions are available as presented in Table 5.2-4 (EN-071).

TABLE 5.2-4

HYDROCARBON EMISSION FACTORS FOR PETROLEUM STORAGE

Liquids	Floating Roof Standing Storage Emissions		Fixed Roof Storage Tank			Variable Vapor Space Tank Filling Losses*
			Breathing Losses		Filling Losses	
	New Tank lbs/day-10^3gal	Old Tank lbs/day-10^3gal	New Tank lbs/day-10^3gal	Old Tank lbs/day-10^3gal	lbs/10^3gal throughput	lbs/10^3gal throughput
Crude Oil	0.029	0.071	0.15	0.17	7.3	--
Gasoline	0.033	0.088	0.22	0.25	9.0	10.2
Jet Naphtha	0.012	0.029	0.069	0.079	2.4	2.3
Kerosene	0.0052	0.012	0.036	0.041	1.0	1.0
Distillate Fuels	0.0052	0.012	0.036	0.041	1.0	1.0

*Based on no auxiliary vapor recovery equipment.

Application of tankage emission factors indicates that average tankage emissions from a refinery generally range from 100 to 1000 pounds per thousand barrels of crude processed depending on type of storage used (AT-040, MS-001). In 1968 approximately 75% of the storage tanks at refineries were equipped with floating roofs. Based on this degree of control, national hydrocarbon emissions from the petroleum refining industry in 1968 were estimated at 3.2×10^5ton/year from crude storage, 4.2×10^5ton/year from gasoline storage, and 2.0×10^5ton/year for the balance of the product storage (MS-001). These emissions are equivalent to 470 lb of hydrocarbons/10^3bbl of refinery feed.

Loading Losses

A second source of hydrocarbon emissions in refinery tank farms occurs at the loading racks. As volatile products are loaded into tank trucks, marine vessels, and rail cars, gasoline vapors in the tanks are displaced to the atmosphere. The quantity of these emissions is dependent on the method of dispensing, quantity of product dispensed, product vapor pressure, and previous service of the transport vehicle.

The greatest determinant in the total emissions generated in product loading is the method of dispensing. In splash loading the liquid is discharged by a short spout into the upper part of the tank. The resultant free fall not only increases evaporation but may result in a fine mist of liquid droplets.

In submerged surface and bottom loading the product is discharged within a few inches of the tank bottom. There is a marked decrease in turbulence, therefore losses by evaporation and entrained droplets are correspondingly reduced.

The hydrocarbon emissions generated from product loading operations at the refinery can be calculated from either the curves shown in Figure 5.2-6 (AM-055) or from Table 5.2-5 (EN-071). The curves in Figure 5.2-6 report hydrocarbon emissions from splash loading and submerged loading as a function of true vapor pressure and in the units of volume percent of the product loaded. Table 5.2-5 reports hydrocarbon emissions in pounds of hydrocarbons per thousand gallons of product loaded. The total quantity of refinery products loaded daily into rail cars, tank trucks, barges and tankers for the year 1973 are reported in Table 5.2-6 (AM-099). These tables and figures indicate that gasoline loading was by far the largest hydrocarbon emission source in refinery loading operations. For 1968 gasoline uncontrolled loading losses at the refinery were estimated at 63,000 tons/year, or approximately 32 lbs/10^3 bbl of refinery feed (MS-001).

5.2.3 Process Sources

A substantial portion of the hydrocarbon emissions from petroleum refineries can be attributed to individual refining processes or to individual auxiliary processes. These sources include catalyst regenerators, barometric condensers, blowdown systems, waste water separators, air blowing, and cooling towers. Because process emission sources are identifiable, their emissions are more accurately quantified and more easily controlled.

Catalytic Cracker Regenerators

An integral part of a catalytic cracking unit is the catalyst regenerator (Figures 5.2-7 and 5.2-8) where coke that is formed on the catalyst surface during cracking is burned off. Because the combustion rate is controlled by limiting the air to the regenerator, there is only partial oxidation, leaving many

FIGURE 5.2-6

LOADING LOSSES FROM MARINE VESSELS, TANK CARS AND TANK TRUCKS

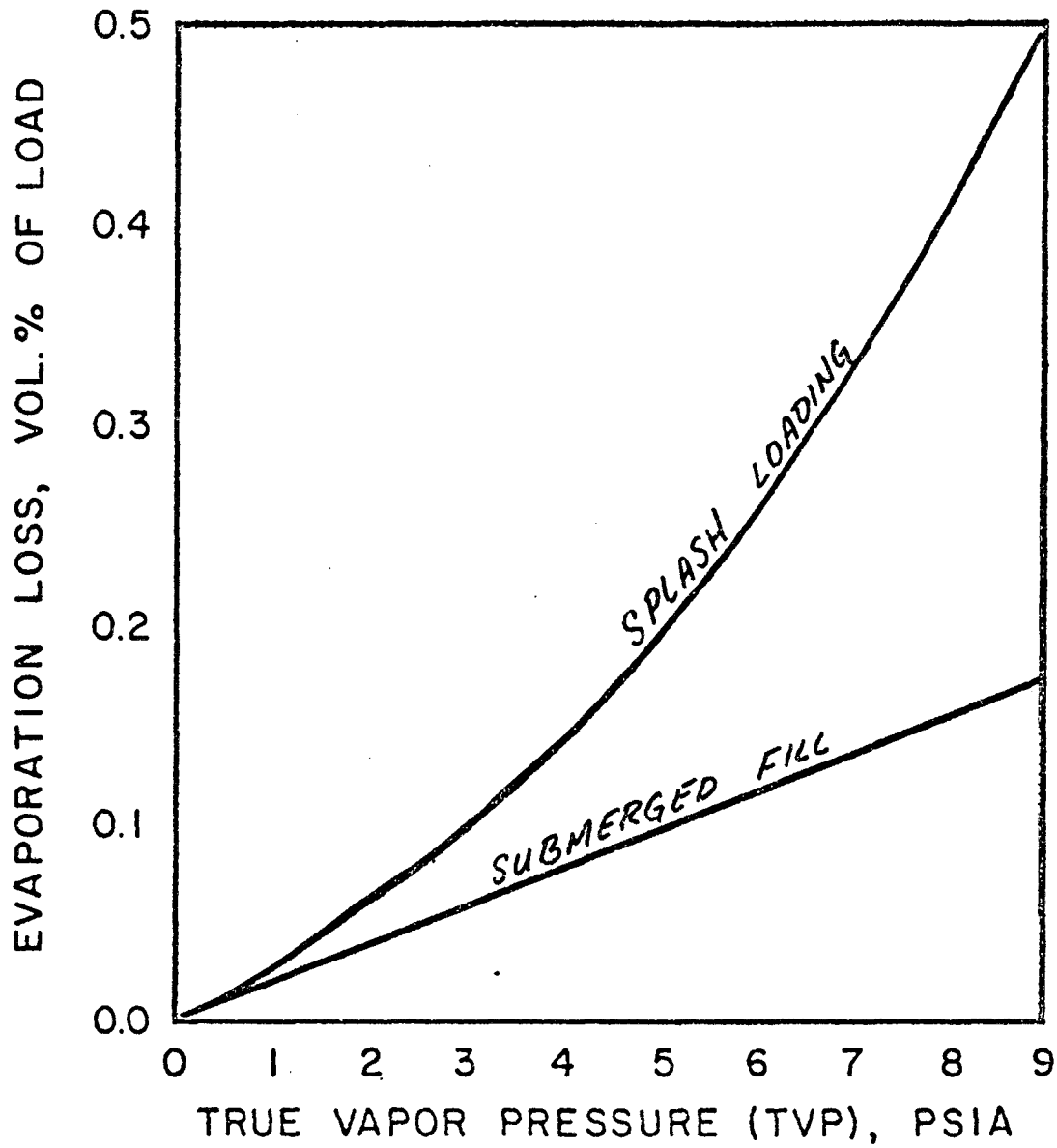

TABLE 5.2-5

HYDROCARBON EMISSIONS FROM

PETROLEUM PRODUCT LOADING

Emission Source	Product Losses ($lbs/10^3 gal$)				
	Gasoline	Crude Oil	Jet Naphtha	Kerosene	Distillate Oil
Rail Cars					
Splash Loading	12.4	10.6	1.8	0.88	0.93
Submerged Loading	4.1	4.0	0.91	0.45	0.48
Tank Trucks					
Splash Loading	12.4	10.6	1.8	0.88	0.93
Submerged Loading	4.1	4.0	0.91	0.45	0.48
Marine Vessels	2.9	2.6	0.60	0.27	0.29

TABLE 5.2-6

MODES OF PRODUCT TRANSPORTATION

FROM REFINERIES (1973)

	Pipeline (10^3bbl/d)	Tanker/Barge (10^3bbl/d)	Rail/Trucks (10^3bbl/d)
Motor Gasoline	4809	649	1215
Aviation Gasoline	11	11	23
Lubricants	0	50	112
Residual Fuel Oils	0	64	2731
Distillate Fuel Oils	1992	297	791
Jet Kerosene	643	100	90
Jet Naphtha	41	27	149
Kerosene	128	44	44

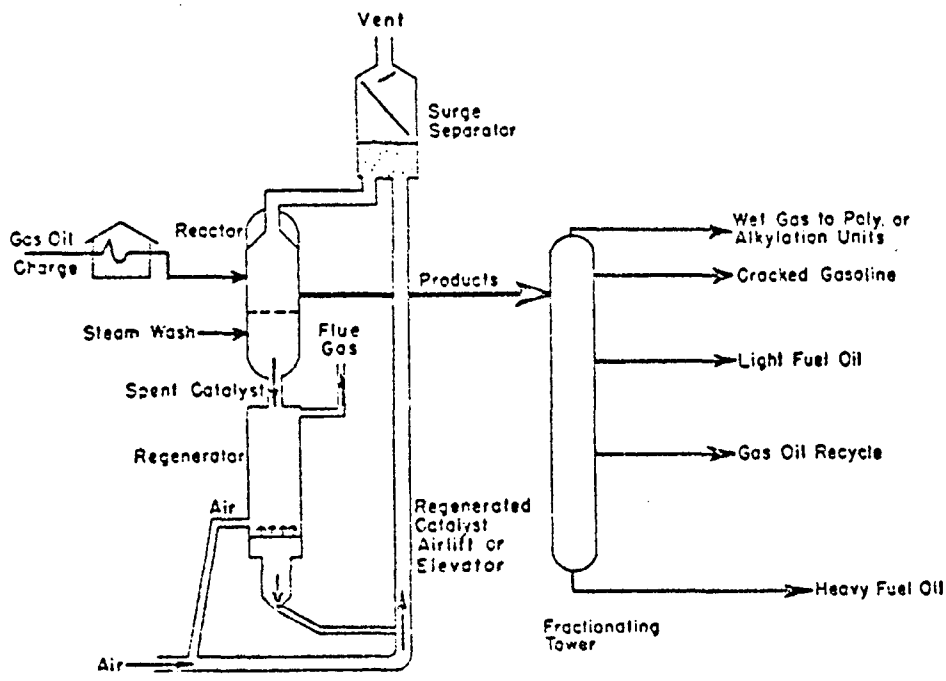

FIGURE 5.2-7

Typical Moving-Bed Catalytic Cracking Unit

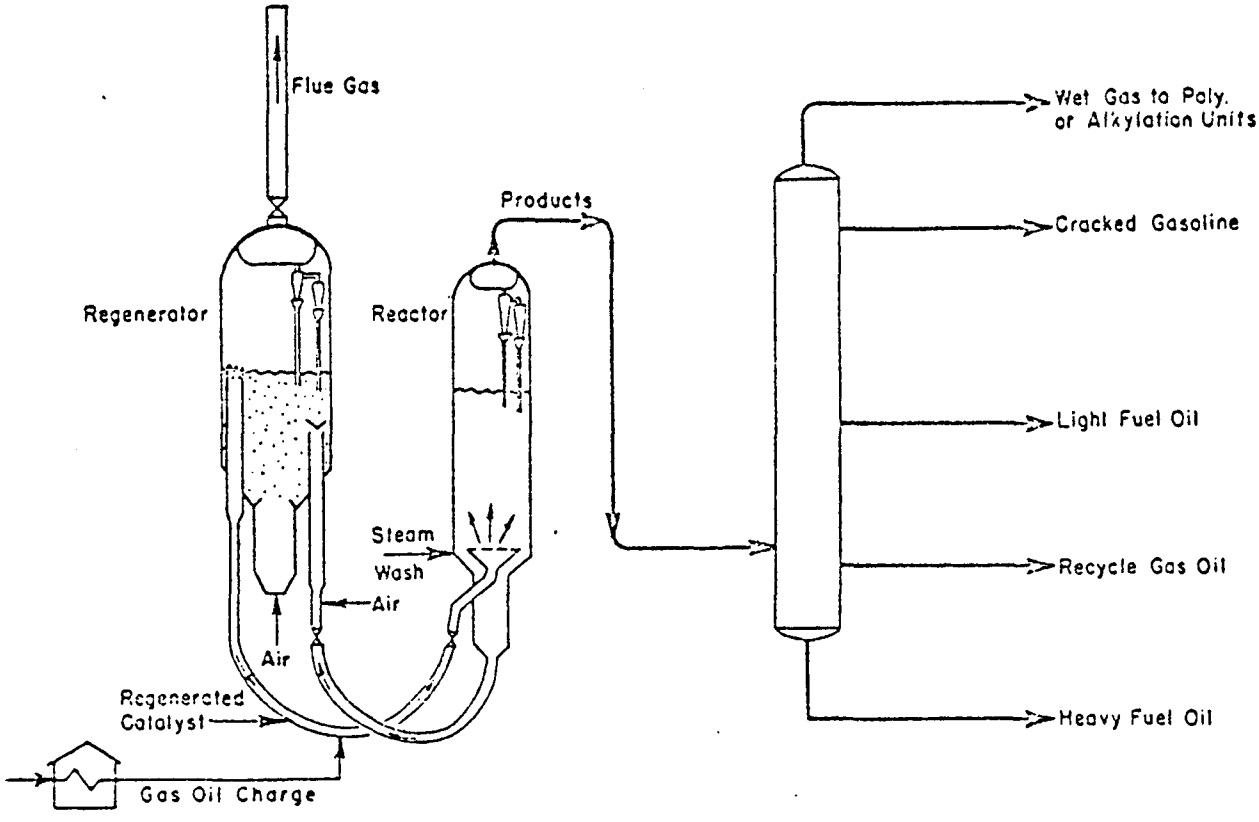

FIGURE 5.2-8

Typical Fluidized Bed Catalytic Cracking Unit

unburned hydrocarbons in the regenerator flue gas. Catalytic cracker regenerators operate continuously.

Regenerator flue gas contains from 100 to 1500 ppm of hydrocarbons (EN-043) depending on characteristics of the charge and the type of catalytic cracker. Hydrocarbon emissions from fluidized bed catalytic cracker regenerators (FCC) average 220 lbs/1000 bbl charge and hydrocarbon emissions from moving bed catalytic cracker regenerators (TCC) average 87 lbs/1000 bbl charge (AM-055). In 1968 the estimated hydrocarbon emissions from FCC regenerators were 143,000 tons/year and from TCC regenerators were 10,000 tons/year (MS-001).

Catalysts used in other process units are regenerated by combustion, generating hydrocarbon emissions similar to those from regenerating cracking catalysts. However these catalysts need only be regenerated once or twice a year resulting in negligible emissions.

Vacuum Jet - Barometric Condensers

Most refineries operate some processing equipment at less than atmospheric pressures. The vacuum distillation column is the most common of these processes operating at a vacuum. Steam driven vacuum jets or ejectors coupled with a barometric condenser are frequently used in refineries to produce and maintain vacuums (Figure 5.2-9). Light hydrocarbons which do not condense in the barometric condenser are discharged to the atmosphere.

Studies indicate that the hydrocarbon emissions from barometric condensers on vacuum distillation columns are approximately 130 lbs/1000 bbl of charge to the vacuum distillation column (LA-129). Because the charge to vacuum

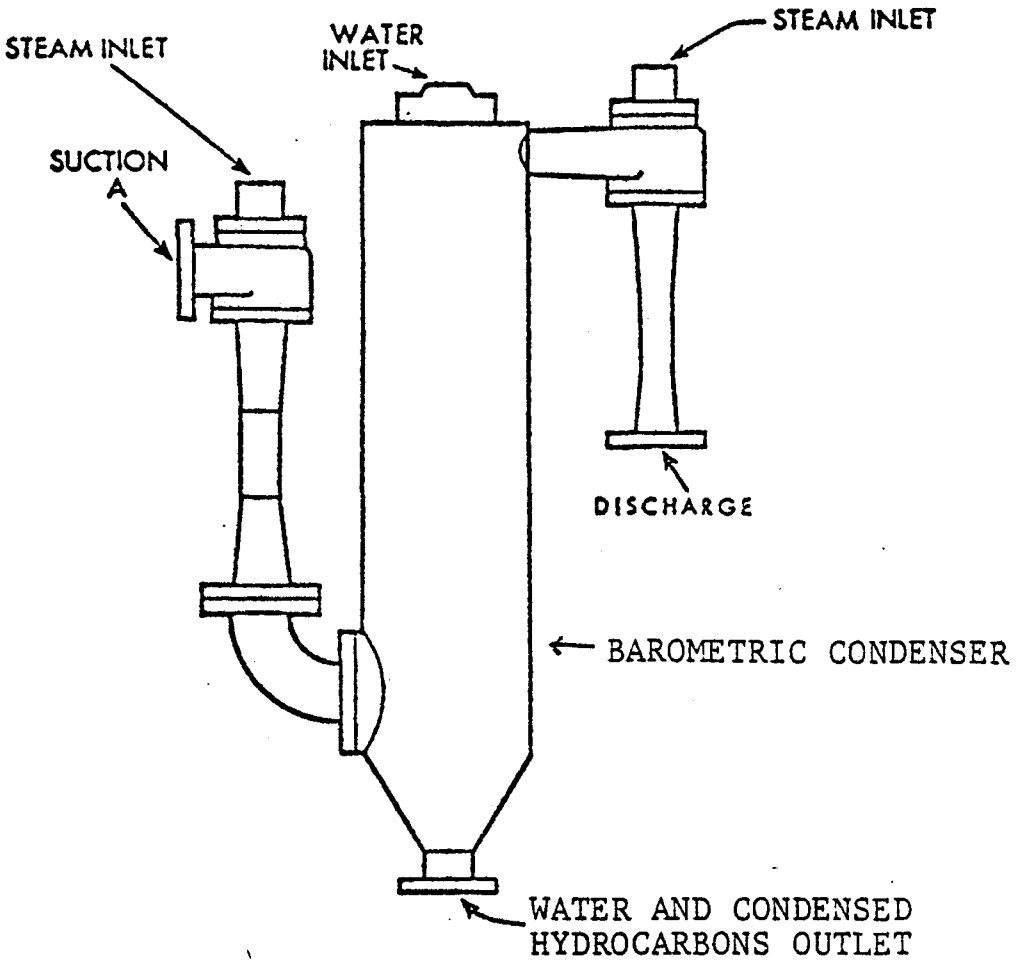

FIGURE 5.2-9

Typical Steam Ejector - Barometric Condenser

distillation columns is 40% to 50% of the crude charge to the refinery, the hydrocarbon emission factor for barometric condensers becomes 50 to 65 lbs/1000 bbl refinery capacity.

Blowdown Systems

One of the essentials of refinery operations is the periodic maintenance and repair of equipment. This involves purging equipment of hydrocarbons. The hydrocarbons purged during shutdowns and startups are often manifolded to blowdown systems for recovery, flaring, or safe venting to the atmosphere. Emergency venting in the event of upsets in operations is also manifolded to the blowdown system.

Studies on hydrocarbon emissions from uncontrolled blowdown systems indicate that they range from 300 to 350 lb of hydrocarbons per 1000 bbl of refinery feed, varying with frequency of shutdowns and upsets (AT-040).

Air Blowing

Air blowing of petroleum products is today confined largely to the manufacture of asphalt, although air is occasionally blown through heavier petroleum products for the purpose of removing moisture. Figure 5.2-10 depicts the flow diagram of a typical asphalt air-blowing process. The use of air blowing for the purpose of agitation, formerly quite common, is today practically non-existent.

Hydrocarbon emissions are generated as the air blown through the asphalt entrains light hydrocarbons and hydrocarbon aerosols. The quantity of light hydrocarbons stripped by the air is a function of the amount of air used, the volatility of the asphalt, and the process temperature. Available data on

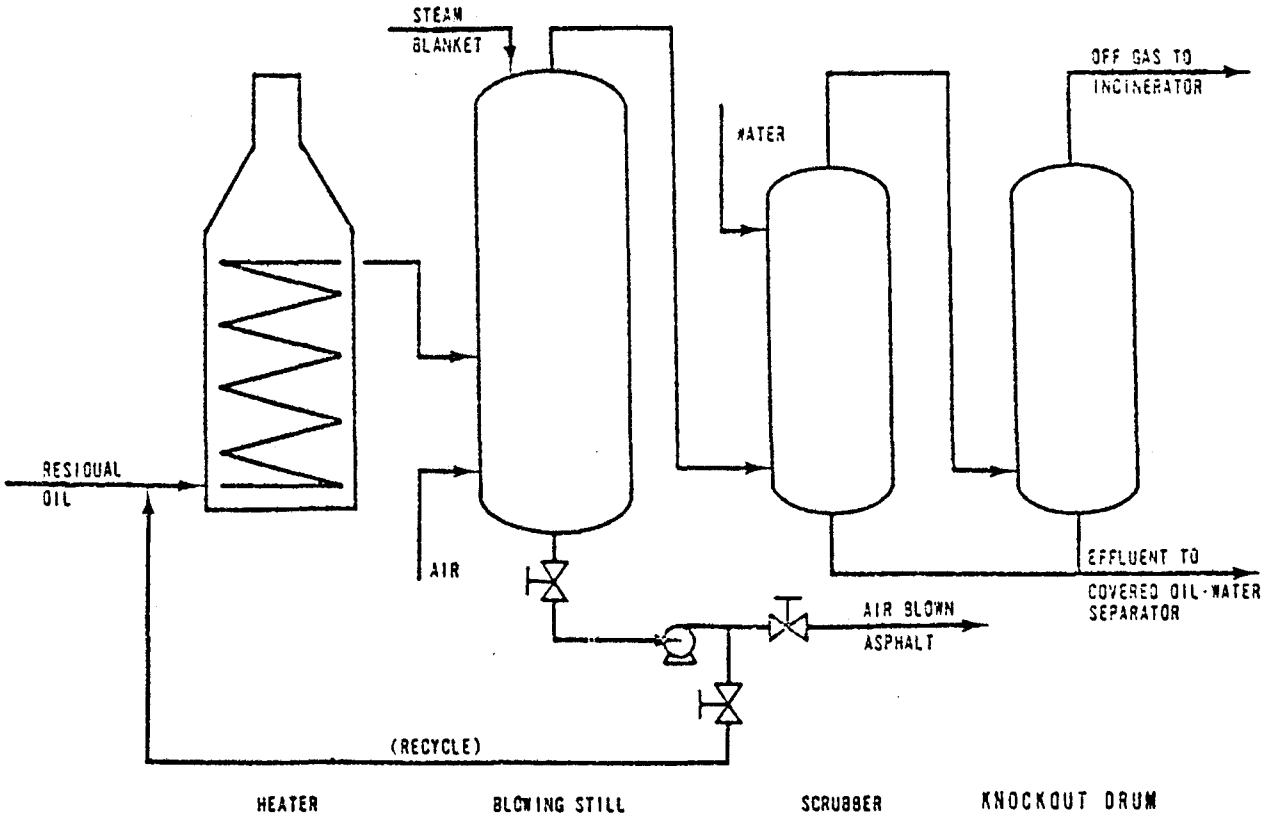

FIGURE 5.2-10

Flow Diagram of Asphalt Blowing Process

asphalt air blowing indicate that hydrocarbon emissions amount to 2%-4% by weight of asphalt charge (AM-055). This may be expressed as 40 to 80 lbs per ton of charge. Because asphalt production is limited, the overall national emissions from asphalt blowing are minor.

Process Drains and Waste Water Separators

Some equipment and a number of operations in oil refineries allow hydrocarbons to reach drains and eventually the waste water separators. These include blind changing, sampling, turnarounds, leaks, and spills. In addition, much of the water routed to the drains is already contaminated with hydrocarbons, including water from processing, pump seal cooling, and flushing. Drains generally flow to an API separator for gravity separation of the oil and water prior to treatment in the waste water treatment plant (Figure 5.2-11).

If the drains and waste water separator are uncovered, hydrocarbons can evaporate to the atmosphere. Important factors in the quantity of hydrocarbon emissions generated are oil concentration, volatility, temperature, and agitation. Uncontrolled emissions from this source approach 200 lbs of hydrocarbons/1000 bbl of refinery feed (AT-040).

Cooling Towers

Petroleum refineries use large quantities of water for cooling. Before the water can be reused, the heat absorbed in passing through process heat exchangers must be removed. This cooling is usually accomplished by allowing the water to cascade through a cooling tower where evaporation removes the sensible heat from the water.

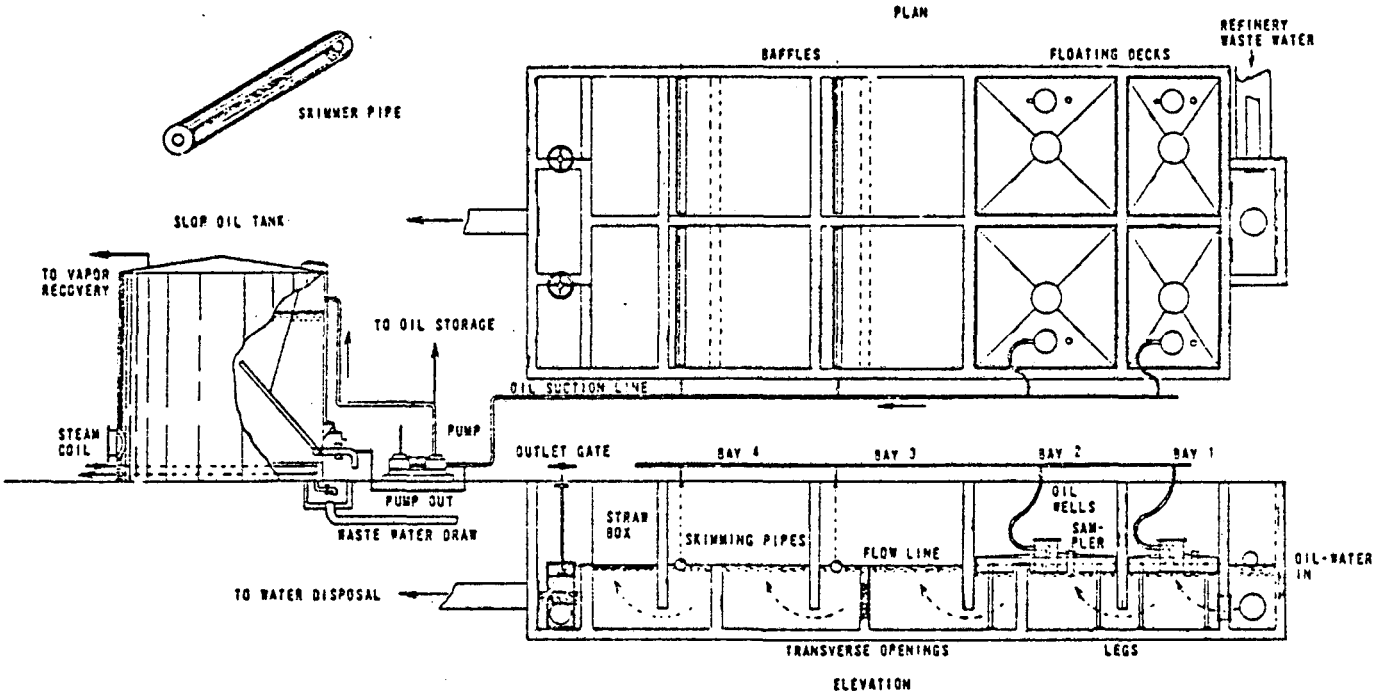

FIGURE 5.2-11

Modern Oil-Water Separator

Hydrocarbon emissions are generated at the cooling tower when hydrocarbons leaked into the cooling water system by heat exchangers evaporate to the atmosphere. A survey of Los Angeles County refineries reported that hydrocarbon emissions from cooling towers range from 5 lbs to 500 lbs/day-10^3gpm of cooling water circulated (DA-069).

5.2.4 Fugitive Sources

One of the largest yet hardest to control category of hydrocarbon emissions from petroleum refineries is fugitive sources. Fugitive sources are those sources which are not attributable to particular refining processes or auxiliary processes, but which are scattered throughout the refinery. Fugitive losses from individual sources are generally small, but become significant because of their prevalence. Fugitive sources include pump seals, relief valves, pipeline valves, sampling, blind changing, etc.

Pump and Compressor Seals

Pumps and compressors required to move liquids and gases in the refinery can leak product at the point of contact between the moving shaft and the stationary casing. If volatile, the leaked product will evaporate to the atmosphere. The two types of seals commonly used in the petroleum industry are packed seals (Figure 5.2-12) and mechanical seals (Figure 5.2-13). Packed seals affect a seal around the moving shaft by forcing a fibrous packing between the shaft and casing wall. Mechancial seals consist of two plates situated perpendicular to the shaft and forced tightly together. One plate is attached to the shaft and one is attached to the casing.

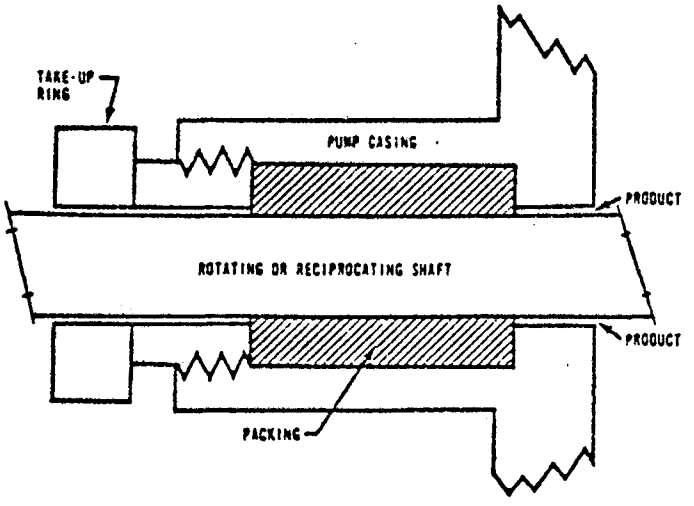

FIGURE 5.2-12

Packed Seal

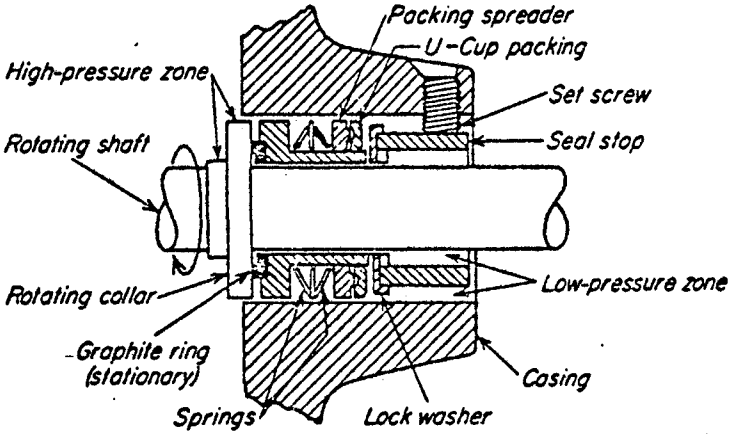

FIGURE 5.2-13

Mechanical Seal

Average hydrocarbon losses for both types of seals on centrifugal and reciprocating pumps and compressors are tabulated in Table 5.2-7 (DA-069). A study of Los Angeles County refineries found centrifugal pumps with packed seals lost 4.8 lbs of hydrocarbons/day-seal, centrifugal pumps with mechanical seals lost 3.2 lbs of hydrocarbons/day-seal, reciprocal pumps with packed seals lost 5.4 lbs of hydrocarbons/day-seal, and compressors lost 8.5 lbs of hydrocarbons/day-seal. On an overall refinery basis these hydrocarbon emissions amount to 17 lb/1000 bbl refinery feed for pumps and 5 lb/1000 bbl refinery feed for compressors (AT-040).

Pressure Relief Valves

For safety and equipment protection, high pressure vessels are commonly equipped with relief valves to vent excessive pressures. Figure 5.2-14 shows a standard pressure relief valve.

Corrosion may cause pressure relief valves to reseat improperly after blowoff, creating a potential source for hydrocarbon leaks and emissions. Surveys indicate average hydrocarbon leaks for relief valves on process vessels average 2.9 lb/day-valve and for relief valves on pressure storage tanks average 0.6 lb/day-valve. The overall quantity of hydrocarbons leaked from refinery relief valves is 2.4 lb/day-valve which equates to 11 lb/10^3bbl refinery feed (AT-040).

Pipeline Valves and Flanges

Under the influences of heat, pressure, vibration, friction, and corrosion, valves and flanges generally develop leaks. The hydrocarbon emissions from these leaks depend on both the volatility of the product and the leak rate.

TABLE 5.2-7
EFFECTIVENESS OF MECHANICAL AND PACKED PUMP SEALS ON VARIOUS TYPES OF HYDROCARBONS

Seal type	Pump type	Type hydrocarbon being pumped, lb Reid	Avg hydrocarbon loss per inspected seal, lb/day	Leak incidence	
				Small leaks,[a] % of total inspected	Large leaks, % of total inspected
Mechanical	Centrifugal	> 26	9.2	19	21
		5 to 26	0.6	18	5
		0.5 to 5	0.3	19	4
Avg		> 0.5	3.2	19	13
Packed	Centrifugal	> 26	10.3	20	37
		5 to 26	5.9	32	34
		0.5 to 5	0.4	12	4
Avg		> 0.5	4.8	22	23
Packed	Reciprocating	26	16.6	31	42
		5 to 26	4.0	24	10
		0.5 to 5	0.1	9	0
Avg		> 0.5	5.4	20	13

[a]Small leaks lose less than 1 pound of hydrocarbon per day.

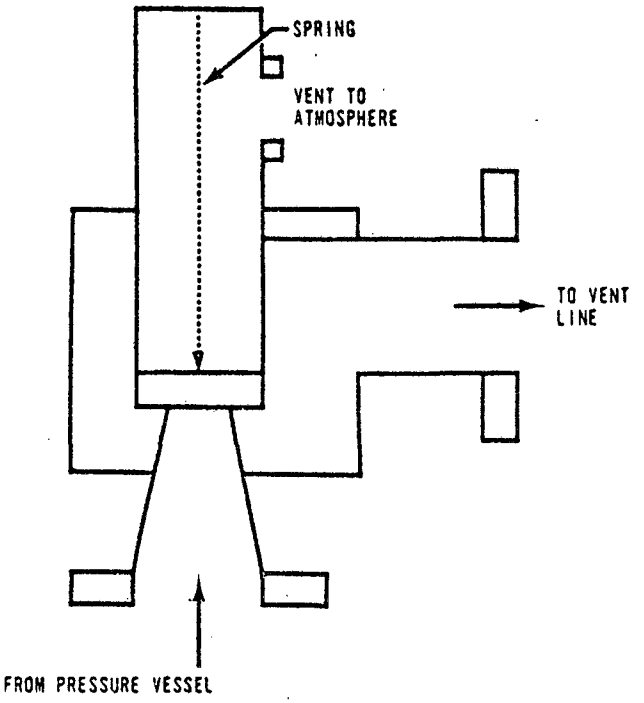

FIGURE 5.2-14
Pressure Relief Valve

Tests of numerous valves indicate average hydrocarbon emissions of 0.5 lb/day-valve for service with materials having vapor pressures above 15 psia, and emissions of 0.05 lb/day-valve for service with materials having vapor pressures below 15 psia. The overall average leakage is 0.15 lb/day-valve which is equivalent to 28 lbs/10^3bbl of refinery feed (AT-040).

Pipeline Blind Changing

Refinery operations frequently require that a pipeline be used for more than one product. To prevent leakage and contamination of a particular product, other product-connecting or product-feeding lines are customarily "blinded off". "Blinding" a line involves inserting a flat solid plate between two flanges of a pipe connection. In inserting or withdrawing a blind, spillage of product in the pipeline can occur. The magnitude of hydrocarbon emissions from the spillage is a function of the spilled liquid's vapor pressure, type of ground surface, distance to nearest drain, and amount of liquid spilled.

Hydrocarbon emissions from blind changing vary greatly in quantity from zero to several pounds per blind. A two month log of emissions from blind changing by Los Angeles refineries indicated average hydrocarbon emissions of 0.29 lb/10^3bbl of refinery feed (AT-040).

Purging Sampling Lines

The operation of process units is constantly checked throughout the refinery by routine analysis of feedstocks and products. To obtain representative samples for these analysis, sampling lines must be purged, resulting in possible hydrocarbon vapor emissions.

Hydrocarbon emissions from excessive purging of sampling lines can amount to 50-100 lbs/10^3bbl of refinery feed (LA-129) but generally average 2.3 lbs/10^3bbl of refinery feed (AT-040).

Others

In every refinery there are several unaccountable hydrocarbon emission sources as well as hydrocarbon emission sources which are not common to all refineries, such as asphalt blowing, coke processing, and lube processing. It has been estimated that this category of emissions amounts to 7 lbs of hydrocarbons/ 10^3bbl of refinery feed (AT-040).

5.3 Hydrocarbon Emission Controls

Because hydrocarbons are the products of refineries, there is an obvious economic incentive to minimize their loss. The control of hydrocarbon emissions from petroleum refineries principally centers around three methods: process changes, installation of control equipment, and improved housekeeping. This section itemizes control measures available for the emission sources discussed in the previous section. Where available, control efficiencies are also given, however, it is very difficult to assign efficiencies to controls which are based upon housekeeping and maintenance.

5.3.1 Combustion Source Controls

Hydrocarbon emissions from process heaters and steam boilers can be minimized by adjusting the fuel to air ratio for optimum fuel combustion. To insure optimum combustion conditions are maintained, some refineries have installed oxygen analyzers and smoke alarms on heater and boiler stacks (WA-086).

Internal combustion engines used to drive older compressors have inherently high hydrocarbon emissions. The major means of controlling hydrocarbon emissions from this source is by carburetion adjustments similar to those applied to automobile engines for emission control. Economic considerations coupled with increased concern for emission reductions is inducing refineries to phase out the use of internal combustion engines.

5.3.2 Storage and Loading Controls

Tankage Controls

The most common form of emission control applied to large storage tanks is the installation of floating roofs or internal floating covers (Figures 5.2-2 and 5.2-3). A physical description of these devices was given in Section 5.2.2. Floating roofs and internal floating covers eliminate breathing and filling emissions by eliminating the vapor space that exists in fixed roof tanks. The application of floating roofs or internal floating covers on all storage of liquids having true vapor pressures ranging from 1.5 psia to 11 psia, would reduce refinery emissions from approximately 1200 lbs to 250 lbs/10^3bbl of refinery feed (MS-001).

Another emission control available for refinery tankage is the manifolding of fixed roof tanks into a vapor saver or a variable vapor space tank (Figures 5.2-4 and 5.2-5). Vapor expansions in excess of the vapor storage capacity would be vented to a vapor recovery unit where the vapors are liquefied and returned to storage. This flow arrangement is shown in Figure 5.3-1. The efficiency of such a system is dependent on the efficiency of the vapor recovery unit. Because of the high

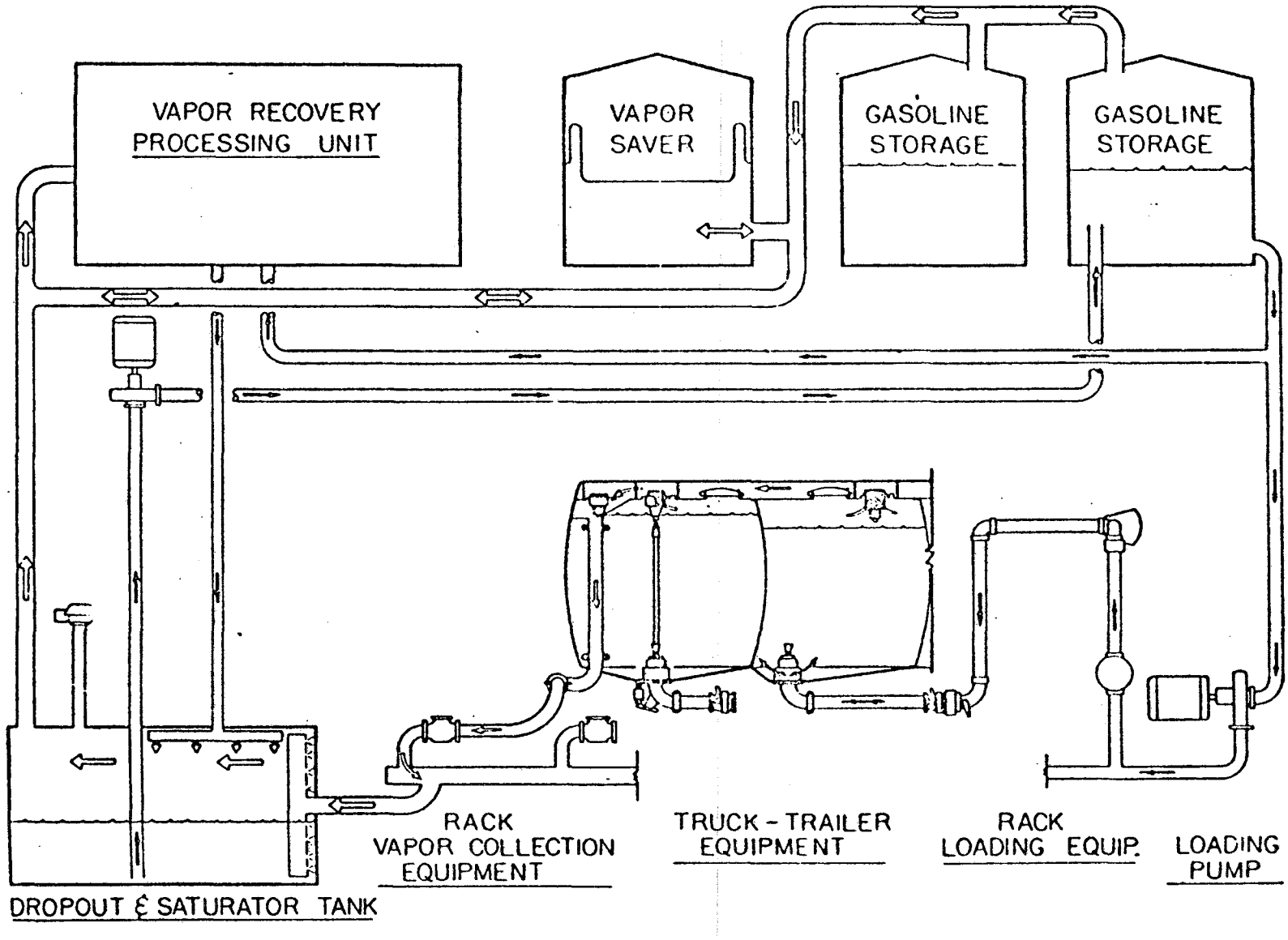

FIGURE 5.3-1

Integrated Vapor Gathering System

cost of vapor recovery units their application normally can be justified only in recovery of the more volatile products.

Loading Rack Controls

Hydrocarbon emissions from transport loading operations are generally controlled by the use of a vapor collection device manifolded into a vapor recovery unit. The transport vehicle may be a tank truck, rail car, barge, or marine vessel.

The type of vapor collection system installed depends on how the transport vehicle is loaded. If the unit is top loaded, vapors are recovered through a top loading arm (Figure 5.3-2). Product is loaded through a central channel in the nozzle. Displaced vapors from the compartment being loaded flow into an annular vapor space surrounding the central channel and in turn flow into a hose leading to a vapor recovery system.

If the transport is bottom loaded, the equipment needed to recover the vapor is considerably less complicated. Vapor and liquid lines are independent of each other with resultant simplification of design. Figure 5.3-3 shows a typical installation. Product is dispensed into the bottom of the transport and displaced vapors are collected from the tank vents and returned to a vapor recovery unit.

Bottom loading vapor recovery has many advantages over top loading vapor recovery. Bottom loading generates much less vapor, generates almost no mist and is safer from a static electricity point of view.

The vapor collection efficiency of loading controls is in excess of 95%. However the overall emission reduction is

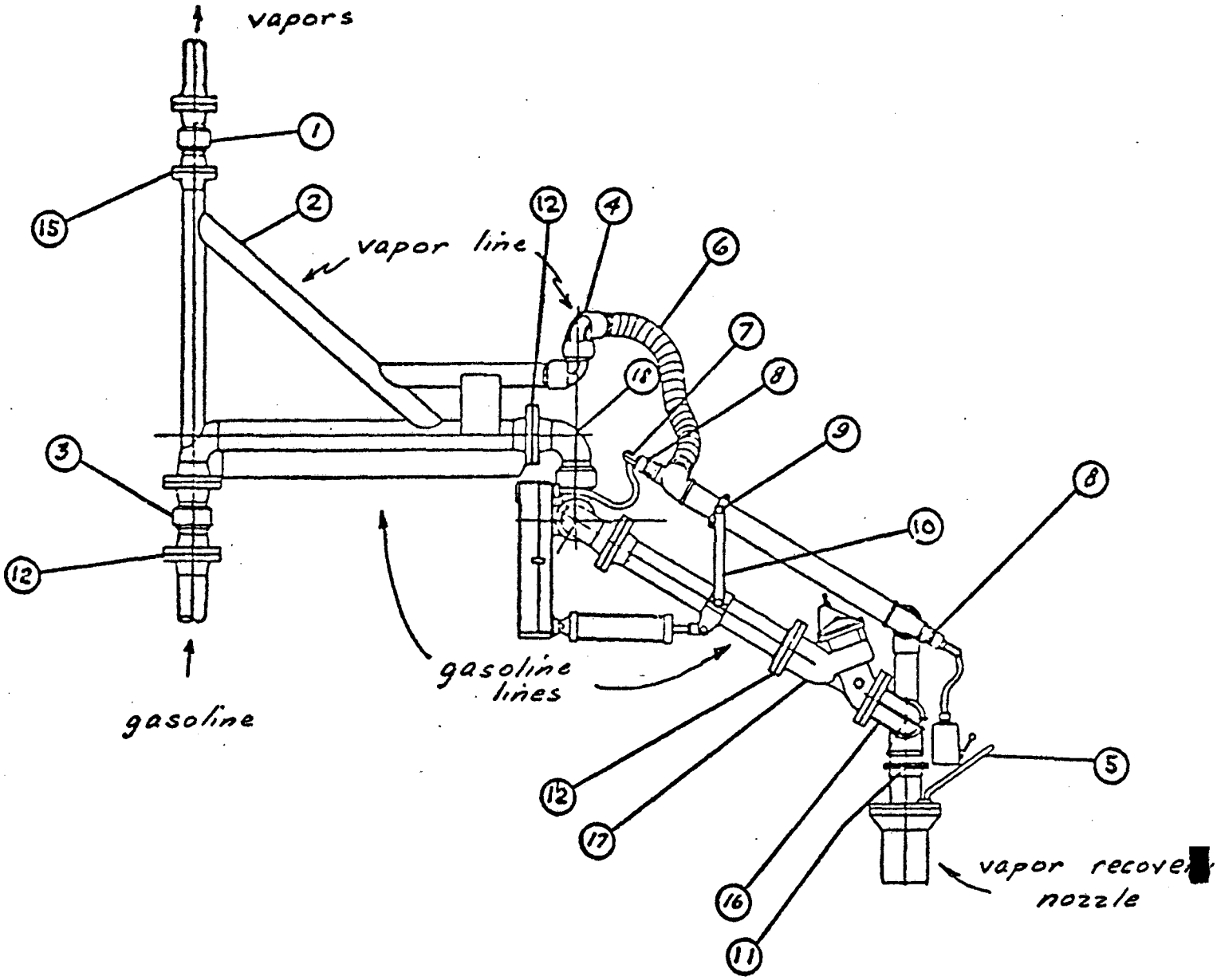

MISCELLANEOUS PARTS

ITEM	PART NO.	DESCRIPTION	QTY.
1	3420-F-30	Swivel Joint, 3"	1
2	2775 *	Boom	1
3	3420-F-40	Swivel Joint, 4"	1
4	H-5936	Swivel Joint 3"	1
5	D-837-M	Handle	1
6	H-5898-RP	Hose	1
7	H-5906-M	Elbow	1
8	H-5905-M	Cord Grip	2
9	H-5818-	Collar Sub-Assembly	2
10	C-1667-A	Link	2
11	C-2479-M	Gasket	1

ITEM	PART NO.	DESCRIPTION	QTY.
12	H-4190-M	Gasket, 4"	6
13	D-836-M	Upper Handle & Pipe	1
14	3630-30	Swivel Joint, 3"	1
15	H-4189-M	Gasket, 3"	1
16	H-5952	Swivel Joint Sub-Assembly, 4"	
	3840-FO-40	Swivel Joint Only	1
	710	4 x 2 7/8 Nipple Only	1
	C-555-A	4" Flange Only	1
17	417-FKA-4"	Loading Valve	1
18	3476-F-40	Swivel Joint, 4"	1

FIGURE 5.3-2

Top Loading Arm Equipped With A Vapor Recovery Nozzle

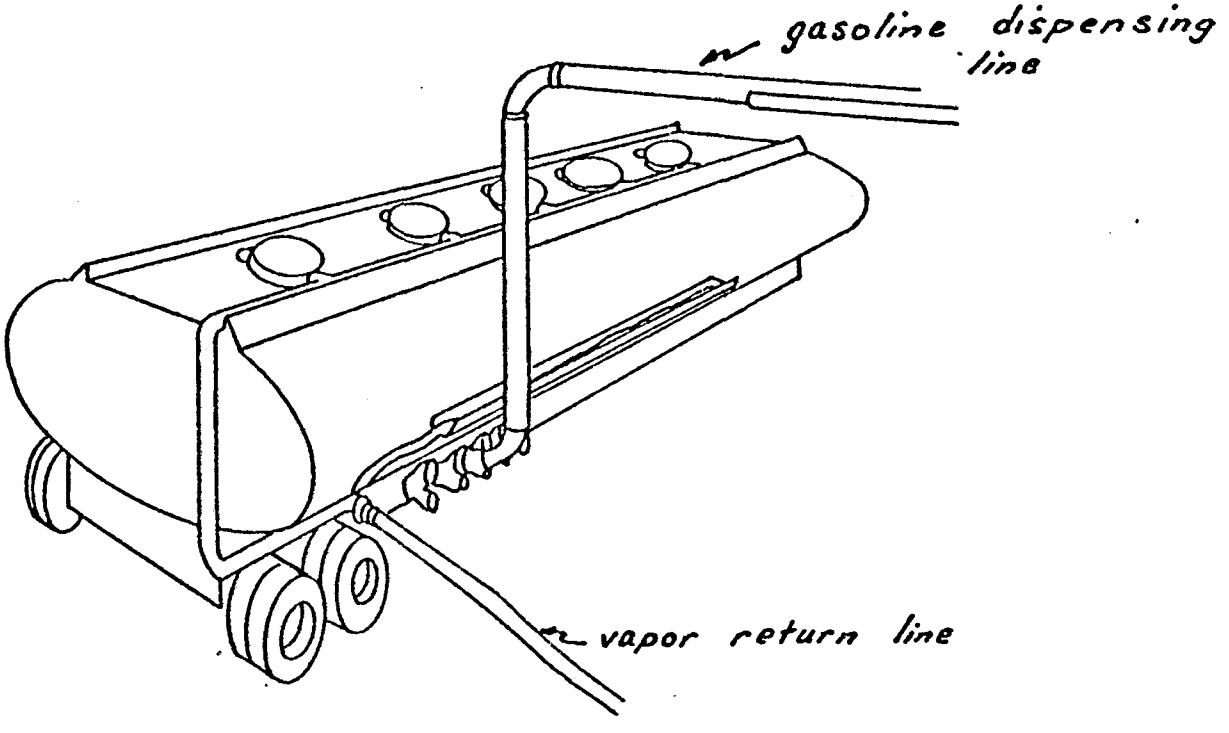

FIGURE 5.3.3

Bottom Loading Vapor Recovery

also dependent on the efficiency of the vapor recovery unit. A 90% efficient vapor recovery unit would make a loading control system 85% efficient and lower the hydrocarbon emissions from loading operations to 5 lbs/10^3 bbl refinery feed.

Vapor Recovery Units

Vapor recovery units are manifolded into the vapor collection systems of tankage and loading operations for the reliquefaction of hydrocarbon vapors into product. Figure 5.3-1 shows an integrated vapor collection system with a vapor recovery unit. Vapor recovery units liquefy hydrocarbon vapors by several principles which include compression, refrigeration, absorption, and adsorption. They also can employ a combination of these principles. The efficiency of vapor recovery units typically ranges from 90% to 97% depending upon the composition and concentration of the hydrocarbon vapors processed.

5.3.3 Process Source Controls

Catalytic Cracker Regenerators

There are two major control measures applicable to the reduction of hydrocarbon emissions in the flue gas of catalytic cracker regenerators. The first of these is incineration in a carbon monoxide waste-heat boiler. By incinerating regenerator flue gas in CO waste-heat boilers, the hydrocarbon emissions are reduced to a negligible amount and valuable thermal energy is recovered from the flue gas.

A second control measure applicable to the flue gas from TCC catalytic cracker regenerators as well as the flue gas from regenerating operations for other catalysts is incineration in a heater fire box or smoke plume burner. These regenerators

produce significantly less flue gas than FCC regenerators and may not justify a CO boiler. Catalysts in this category may include reformer, isomerization, and hydrocracking catalysts. Hydrocarbon emissions in regenerator flue gas are reduced to negligible quantities by incineration in heater fire-boxes and smoke plume burners.

Although neither CO boilers nor other forms of regenerator flue gas incineration are extensively used today, they are becoming standard equipment in new refineries and expansions of existing units. This is a result of both energy conservation and increased concern for air quality.

Vacuum Jets - Barometric Condensers

Hydrocarbon emissions from barometric condensers on vacuum jets are attributable to both the venting of non-condensable hydrocarbons as well as to the evaporation of hydrocarbons from the oily barometric condensates.

Three measures for minimizing oily condensate generation are mechanical vacuum pumps, lean oil absorption, and surface condensers. While mechanical vacuum pumps have little effect on the quantity of non-condensable hydrocarbons generated, they do eliminate the generation of oily steam condensate. The insertion of a lean oil absorption unit between the vacuum tower and the first stage vacuum jet helps to minimize the quantities of both non-condensables and oily condensate (AM-055). The rich oil effluent is reused as charge stock and not regenerated. Surface condensers in place of barometric condensers minimize oily condensates but have little effect on the quantity of non-condensables (AT-040).

Because there are no means to completely eliminate the generation of non-condensable vapors from vacuum pumps or steam ejectors, these emissions must be controlled by either vapor incinerators or vapor recovery units. Vapor incinerators combust the vapors by catalytic or direct flame methods. Vapor recovery units on the other hand recover the hydrocarbon vapors and return them to processing streams.

The maximum degree of control attainable for the hydrocarbon vapors from vacuum jets equipped with barometric condensers is effectively 100% (AT-040). Currently however, controls for vacuum units are not widely applied in the petroleum industry.

Blowdown Systems

Blowdown emissions can be effectively controlled by venting into an integrated vapor-liquid recovery system. All units and equipment subject to shutdowns, upsets, emergency venting, and purging are manifolded into a multi-pressure collection system. Discharges into the collection system are segregated according to their operating pressures. A series of flash drums and condensers arranged in descending pressures separates the blowdown into vapor pressure cuts. These recovered gaseous and liquid cuts can be either flared and/or re-refined.

Fully integrated blowdown recovery systems can reduce refinery blowdown emissions to 5 lbs of hydrocarbon/10^3bbl of refinery feed (AT-040). Because most refineries are currently applying some degree of blowdown system control the average refinery emissions from blowdown systems range from 120 lbs to 200 lbs of hydrocarbons/10^3bbl of refinery feed (MS-001, AT-040).

Air Blowing

Control of the hydrocarbon vapors and aerosols generated by air blowing of asphalts is normally accomplished by one of two methods.

1) Scrubbing of vapors with water.

2) Incineration of vapors in an afterburner or firebox.

A disadvantage of controlling asphalt blowing exhaust gases by water scrubbing is the high volume ratio of water to exhaust gas required to scrub the noncondensable gases of pungent odor. This ratio is reported as 100 gal per 1000 scf (AM-055).

When an adequate water supply is not available or where handling condensate may result in hydrocarbon emissions, incineration of the vapors by direct flame contact may be used. Incineration and scrubbing systems have also been combined to achieve maximum control.

On a refinery basis, the hydrocarbon emissions from a controlled asphalt blowing unit are negligible (AT-040).

Process Drains and Waste Water Separators

Control measures for reducing the evaporative hydrocarbon emissions from process drains and waste water separators center around 1) reducing the quantity of hydrocarbons evaporated and 2) enclosing the waste water systems.

The quantity of hydrocarbons evaporated can first be reduced by minimizing through good housekeeping the volume of

oil leaked to the waste water systems. Lowering the temperature of the waste water will also reduce hydrocarbon evaporation (AM-055).

Measures for enclosing waste water systems include manhole covers, catch basin liquid seals, and fixed or floating roofs for API separators. The potential also exists for some form of vapor disposal or vapor recovery device in conjunction with fixed roofs on API separators (EL-033).

Studies of Los Angeles County refineries indicate that hydrocarbon emissions from controlled waste water systems are as low as 10 lbs/10^3bbl of refinery feed (AT-040). On a nationwide basis and accounting for the existing degree of control, it is estimated that hydrocarbon emissions from waste water systems in 1972 averaged 105 lbs/10^3bbl refinery feed (MS-001).

Cooling Towers

The control of hydrocarbon emissions from cooling towers is best effected at the point where hydrocarbon contaminants enter the cooling water. Hence, systems of detection of contamination in water, proper maintenance, speedy repair of leaks, and good housekeeping programs in general are necessary to minimize the air pollution occurring at the cooling tower. In addition, water that has been used in direct contact condensers should be eliminated from cooling towers. Greater use of air cooling will also control hydrocarbon emissions by reducing the size of the cooling water system (DA-069).

Refineries practicing good housekeeping in Los Angeles County have succeeded in reducing their cooling tower emissions to approximately 10 lbs/10^3bbl refinery feed (AT-040, AM-055).

5.3.4 Fugitive Source Controls

Although inconspicuous, fugitive hydrocarbon emission sources are generally significant because of their abundance. Regular maintenance and good housekeeping are the major control measures for minimizing fugitive hydrocarbon emissions.

Pumps and Compressor Seals

Pump and compressor seals inherently leak and there are no practical means for eliminating hydrocarbon emissions from these sources. As brought out in section 5.2.4 on fugitive emissions, the emissions from centrifugal pumps with mechanical seals average 3.2 lbs/day-seal and from centrifugal pumps with packed seals average 4.8 lbs/day-seal. Therefore a 33% reduction in hydrocarbon emissions from centrifugal pumps may be effected by installing mechanical seals in place of packed seals. There are no alternatives to using packed seals on reciprocating pumps. Dual sets of seals may also be installed with provisions to vent the volatile vapors that leak past the first seal, into a vapor recovery system.

Without a doubt, frequent inspection and maintenance of seals are very important measures for the minimization of pump and compressor leaks.

Pressure Relief Valves

Hydrocarbon emissions from pressure relief valves are sometimes controlled by manifolding to a vapor control device or a blowdown system (DA-069). For valves where it is not desirable, because of convenience or safety aspects, to discharge into a closed system, frangible blanks called rupture discs can

be installed before the valve. Rupture discs serve to prevent the pressure relief valve from leaking as well as protect the valve seat from corrosive environments (WA-086).

The hydrocarbon emissions from relief valves controlled by rupture discs or blowdown systems are negligible.

Pipeline Valves and Flanges

Hydrocarbon emissions originating from product leaks at valves and flanges can only be controlled by regular inspection and prompt maintenance of valve packing boxes and flange gaskets. Because of its dependence on the nature of the products handled, the degree of maintenance, and the characteristics of the equipment, the emissions reduction from controlling valves and flanges is undefinable.

Pipeline Blend Changing

Emissions from the changing of blinds can be minimized by pumping out the pipeline and then flushing the line with water before breaking the flange. Slight vacuums can be maintained in the pipeline for the case of highly volatile hydrocarbons. Spillage can also be minimized by the use of special "line" blinds in place of the common "slip" blinds. A survey of Los Angeles County refineries indicated that spillage from line blinds was 40% of the spillage for slip blinds. In addition combinations of line blinds in conjunction with gate valves allow changing of line blinds while the pipeline is under pressure (DA-069).

Purging Sampling Lines

One means for controlling the hydrocarbon emissions generated by purging sampling lines is the installation of drains and flushing facilities at each sample point. Conscious efforts to avoid excessive sampling in addition to flushing sample purges into the drain have a significant impact on the hydrocarbon emissions from sampling operations.

Miscellaneous Emissions

There are several other fugitive emission sources which are collectively significant but not common to all refineries and not easily identifiable. The control of these sources is basically centered around regular inspection, proper maintenance, and good housekeeping. The efficiency of these control measures is dependent on the degree to which they are performed and the nature of the emission sources.

6.0 GASOLINE MARKETING

6.1 The Industry

The gasoline marketing industry is defined as that industry concerned with the transfer and storage of gasoline. This definition includes all transfer and storage operations that occur in transporting gasoline products from petroleum refineries to the consumer. These operations represent a significant part of the petroleum industry.

6.1.1 Quantity of Products

In 1967, over 80 billion gallons per year of motor gasoline were distributed through 2,700 marketing terminals and over 36,000 bulk stations. By 1973 annual U. S. consumption had grown to over 106 billion gallons, about 70 percent of which was sold to passenger cars at 212,000 retail service stations. The remaining 30 billion gallons were sold to industrial, commercial, and rural customers or to passenger cars at nonservice station outlets. The combined wholesale and retail segments of the gasoline marketing industry employ over 700,000 people.

In 1973, 6.7 million barrels per day of motor gasoline were produced. Table 6.1-1 specifies the number of refineries and the volume of gasoline produced in each state. Outputs from these refineries, plus some imported refined products, are the sources of supply to the domestic gasoline marketing network. In addition to motor gasoline, U. S. refineries produced 45,000 barrels per day of aviation gasoline in 1973, which is less than one percent of motor gasoline production.

TABLE 6.1-1

GASOLINE REFINING AND MARKETING FACILITIES

State	Refineries[1] 1973	Gasoline Output (b/d)[1] 1973	Bulk Stations[2] 1967	Terminals[2] 1967	Bulk Stations and Terminals 1967[2]	Bulk Stations and Terminals 1972[3*]	Service Stations 1972[4]
Alabama	4	1,200	449	52	501	518	4,510
Alaska	2	----	29	50	79	88	241
Arizona	1	----	213	17	230	219	2,357
Arkansas	4	16,700	526	24	550	535	3,144
California	37	1,009,479	1,154	125	1,279	1,166	19,153
Colorado	3	30,550	----	---	452	366	3,170
Connecticut	0	----	72	60	132	120	2,798
Delaware	1	73,400	34	10	44	43	557
D.C.	0	----	4	3	7	7	318
Florida	1	----	546	79	625	558	9,199
Georgia	2	----	610	63	673	656	6,730
Hawaii	1	11,680	12	30	42	32	480
Idaho	0	----	366	23	389	317	1,193
Illinois	12	592,950	1,448	85	1,533	1,324	10,211
Indiana	7	219,095	993	74	1,067	865	6,235
Iowa	0	----	1,481	49	1,530	1,202	4,484
Kansas	10	190,271	841	26	867	663	3,609
Kentucky	4	59,400	492	44	536	417	3,921
Louisiana	20	788,330	464	58	522	569	3,921
Maine	0	----	142	34	176	163	1,224
Maryland	2	----	129	58	187	172	3,012
Massachusetts	0	----	112	49	161	157	4,698
Michigan	6	57,320	1,055	87	1,142	1,023	8,919
Minnesota	3	69,910	1,282	43	1,325	1,012	4,585

TABLE 6.1-1 (Cont.)

GASOLINE REFINING AND MARKETING FACILITIES

State	Refineries[1] 1973	Gasoline Output (b/d)[1] 1973	Bulk Stations[2] 1967	Terminals[2] 1967	Bulk Stations and Terminals 1967[2]	Bulk Stations and Terminals 1972[3*]	Service Stations 1972[4]
Mississippi	5	161,400	448	35	483	427	2,725
Missouri	1	38,400	1,028	55	1,083	839	6,280
Montana	8	68,326	----	---	418	356	1,190
Nebraska	1	2,200	589	19	608	471	2,265
Nevada	0	----	89	12	101	90	798
New Hampshire	0	----	69	7	76	70	888
New Jersey	5	237,970	147	89	236	218	5,768
New Mexico	6	18,350	230	17	247	246	1,831
New York	2	42,100	481	282	763	672	11,359
N. Carolina	0	----	732	114	846	771	6,946
N. Dakota	2	22,000	634	14	648	556	910
Ohio	7	292,090	905	118	1,023	784	11,723
Oklahoma	12	253,417	589	25	614	594	4,153
Oregon	1	----	504	28	532	434	2,828
Pennsylvania	11	330,435	603	156	759	662	11,256
Rhode Island	1	----	27	17	44	36	901
S. Carolina	0	----	368	46	414	378	3,720
S. Dakota	0	----	531	16	547	491	1,171
Tennessee	0	14,000	439	53	492	439	5,157
Texas	43	1,795,075	1,841	118	1,959	2,211	17,118
Utah	6	53,400	164	11	175	155	1,504
Vermont	0	----	61	11	72	60	596
Virginia	1	24,000	447	87	534	473	4,648
Washington	6	161,770	579	94	673	541	3,945
W. Virginia	3	5,650	160	29	189	162	2,156

TABLE 6.1-1 (Cont.)

GASOLINE REFINING AND MARKETING FACILITIES

State	Refineries[1] 1973	Output(b/d)[1] 1973	Bulk Stations[2] 1967	Terminals[2] 1967	Bulk Stations and Terminals 1967[2]	Bulk Stations and Terminals 1972[3*]	Service Stations 1972[4]
Wisconsin	1	14,100	1,222	71	1,293	1,042	5,182
Wyoming	9	67,140	----	---	192	161	772
TOTAL	252	6,722,108	26,338	2,701	29,039	25,531	226,459

Source: [1]API Annual Statistical Review, Petroleum Industry Statistics, 1964-73, p. 33.(AM-099)

[2]1967 Census of Business, Vol. 3, Wholesale Subject Reports. (US-031)

[3]1972 Census of Business, Wholesale Trade, Area Statistics.

[4]1972 Census of Business, Retail Trade, Area Statistics

6.1.2 Nature of Products

Motor gasolines are blends of petroleum distillates carefully combined to yield the proper volatility and combustion characteristics for good engine performance. Their compositions are complex and vary greatly with the sources of crude oil from which they were distilled and with the types of conversion processes to which they have been subjected. Gasoline compositions also vary greatly because the temperatures and altitudes at which gasolines are used vary, and the gasoline blends must be altered to ensure proper fuel volatility and car performance at each locale and for each season.

Gasoline is often characterized by Reid Vapor Pressure (RVP), a technique developed as a means of expressing the vapor pressure or volatility of petroleum fractions. This is an extensively used parameter in the study of hydrocarbon emissions from gasoline marketing facilities. Figure 6.1-1 (DA-004) correlates Reid Vapor Pressure with true vapor as a function of temperature. In the absence of distillation data, the value of S (the slope of the ASTM distillation curve at 10% evaporation) may be estimated as three for motor gasolines. Seasonal and locational variations in Reid Vapor Pressures and several other gasoline characteristics for both premium and regular grades are presented in Table 6.1-2 (SH-137) and Table 6.1-3 (SH-138). Districts to which these tables refer are shown in Figure 6.1-2 (SH-137).

Improved refinery processing technology and more natural gas liquids production have increased the availability

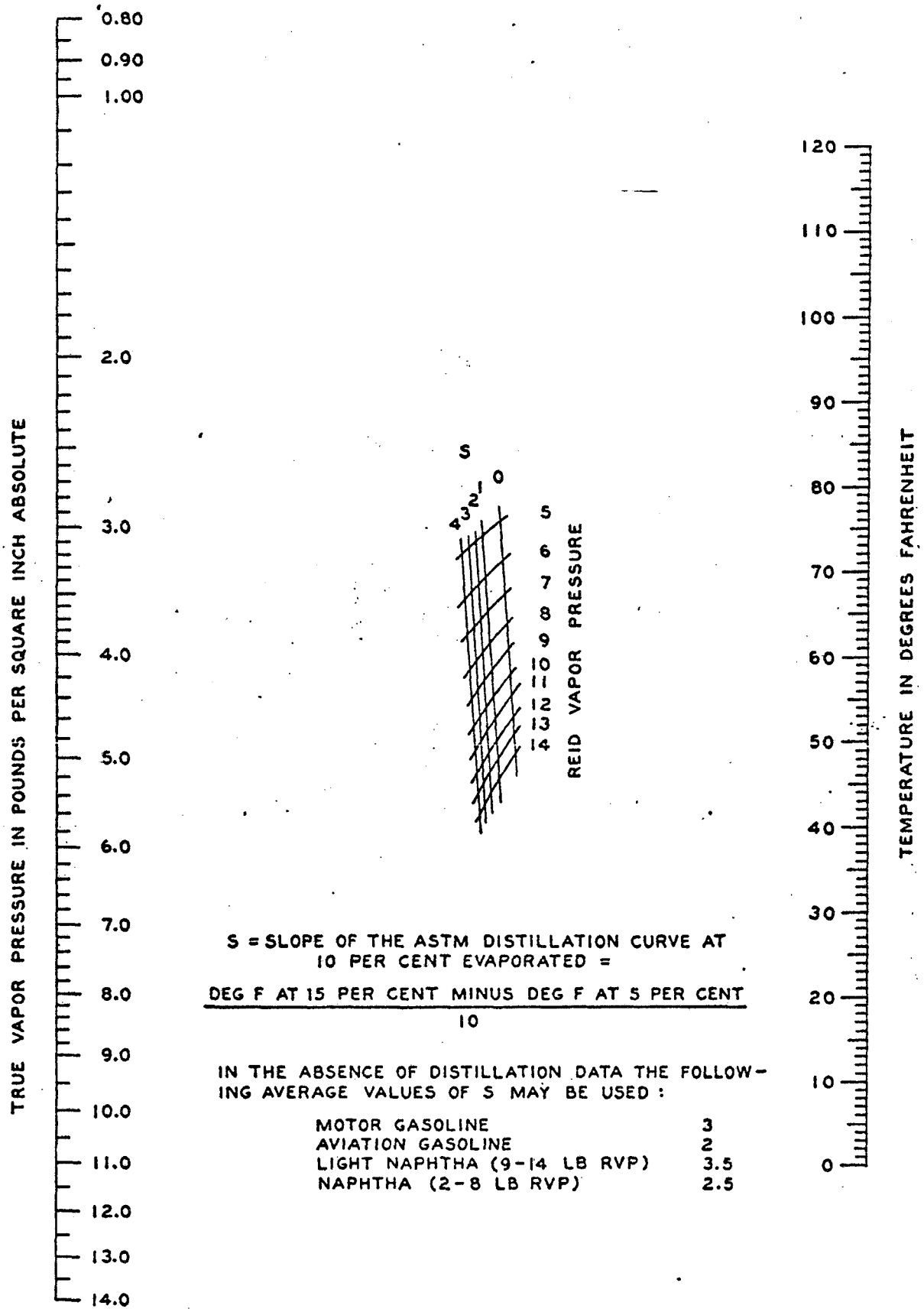

S = SLOPE OF THE ASTM DISTILLATION CURVE AT 10 PER CENT EVAPORATED =

$$\frac{\text{DEG F AT 15 PER CENT MINUS DEG F AT 5 PER CENT}}{10}$$

IN THE ABSENCE OF DISTILLATION DATA THE FOLLOWING AVERAGE VALUES OF S MAY BE USED:

MOTOR GASOLINE	3
AVIATION GASOLINE	2
LIGHT NAPHTHA (9-14 LB RVP)	3.5
NAPHTHA (2-8 LB RVP)	2.5

FIGURE 6.1-1

Vapor Pressures of Gasolines

TABLE 6.1-2

MOTOR GASOLINE SURVEY, SUMMER 1973 AVERAGE DATA FOR BRANDS IN EACH DISTRICT

PREMIUM-PRICE GASOLINE

DISTRICT NO. AND NAME	NO. OF BRANDS	SAMPLES	GR., ASTM D287 API	SULF, ASTM D1266 WT %	GUM, ASTM D381 MG	PHOS, ASTM D3231 G/GAL	LEAD, ASTM D526 G/GAL	OCTANE NUMBER RES, ASTM D2699	OCTANE NUMBER MOT, ASTM D2700	OCTANE NUMBER R+M --- 2	RVP, ASTM D323 LB	20V/L ASTM D439 F	DISTILLATION, ASTM D86 TEMPERATURE, F (CORRECTED TO 760 MM HG) IBP	PERCENT EVAPORATED 5	10	20	30	50	70	90	95	EP	RES %	LOSS %
1 NORTHEAST	13	58	60.0	0.030	0	-	2.39	99.8	91.8	95.8	10.1	133	89	100	115	139	166	219	261	327	363	402	1.2	1.9
2 MID-ATLANTIC COAST	17	214	59.5	.024	1	0.014	2.43	99.6	91.7	95.7	9.8	135	90	105	119	142	168	219	264	330	365	408	1.1	1.7
3 SOUTHEAST	18	193	60.2	.026	0	-	2.51	99.8	92.0	95.9	9.5	136	92	106	119	143	169	218	263	328	362	403	1.0	1.6
4 APPALACHIAN	17	166	61.4	.019	1	.003	2.27	99.5	91.9	95.7	10.3	132	89	103	117	141	167	215	258	325	364	411	1.0	2.2
5 MICHIGAN	15	106	63.2	.024	1	.004	2.31	99.4	92.1	95.8	10.2	132	90	104	119	143	171	210	250	319	356	404	.9	1.9
6 NORTH ILLINOIS	14	61	63.3	.028	1	.001	2.30	99.4	92.5	96.0	10.2	132	90	103	118	144	170	210	248	320	363	407	.9	1.9
7 CENTRAL MISSISSIPPI	21	109	62.8	.021	1	.003	2.35	99.5	92.1	95.8	9.4	137	90	107	120	147	172	212	249	321	362	404	.9	1.8
8 LOWER MISSISSIPPI	19	147	60.5	.034	0	.000	2.59	99.6	91.9	95.8	9.2	138	89	108	122	146	171	217	260	331	363	410	1.0	1.6
9 NORTH PLAINS	14	52	65.1	.040	0	-	2.52	99.0	93.3	96.2	9.5	136	89	106	121	149	174	209	239	314	358	399	1.1	1.6
10 CENTRAL PLAINS	12	93	65.0	.035	1	-	2.23	98.9	91.9	95.4	8.8	139	92	110	124	147	169	211	245	320	365	410	1.0	1.6
11 SOUTH PLAINS	20	133	63.3	.024	1	.000	2.69	99.2	92.5	95.9	9.0	139	91	108	123	148	172	215	252	327	365	409	1.0	1.6
12 SOUTH TEXAS	15	94	60.8	.019	1	.004	2.85	99.6	92.0	95.8	9.0	138	91	108	122	144	167	215	258	329	358	400	1.0	1.3
13 SOUTH MOUNTAIN STATES	16	243	61.9	.025	1	.000	2.47	98.1	91.0	94.6	8.7	142	94	113	128	150	173	218	260	336	375	414	.9	1.3
14 NORTH MOUNTAIN STATES	13	137	64.1	.034	1	.005	2.24	99.0	91.8	95.4	9.6	136	87	107	121	147	173	213	247	324	362	404	.9	2.0
15 PACIFIC NORTHWEST	9	59	61.8	.008	1	.001	2.35	99.1	91.7	95.4	10.2	132	88	104	118	141	164	212	255	313	341	383	1.0	2.0
16 NORTH CALIFORNIA	11	70	57.4	.011	1	.001	2.07	99.3	91.6	95.5	8.7	144	93	112	131	157	182	225	265	327	356	403	1.0	1.7
17 SOUTH CALIFORNIA	11	91	58.2	.034	1	.001	2.65	99.1	91.2	95.2	9.0	141	92	110	126	150	173	219	263	327	360	409	1.0	1.6
AVERAGE			61.7	.026	1	.003	2.42	99.3	91.9	95.6	9.5	137	90	107	121	146	171	215	255	325	361	405	1.0	1.7

SAMPLES 2,031

REGULAR-PRICE GASOLINE

DISTRICT NO. AND NAME	NO. OF BRANDS	SAMPLES	GR., ASTM D287 API	SULF, ASTM D1266 WT %	GUM, ASTM D381 MG	PHOS, ASTM D3231 G/GAL	LEAD, ASTM D526 G/GAL	OCTANE NUMBER RES, ASTM D2699	OCTANE NUMBER MOT, ASTM D2700	OCTANE NUMBER R+M --- 2	RVP, ASTM D323 LB	20V/L ASTM D439 F	DISTILLATION, ASTM D86 TEMPERATURE, F (CORRECTED TO 760 MM HG) IBP	PERCENT EVAPORATED 5	10	20	30	50	70	90	95	EP	RES %	LOSS %
1 NORTHEAST	12	52	60.7	0.040	0	-	2.21	94.2	87.0	90.6	9.8	132	88	102	115	136	158	209	267	340	372	410	1.0	2.0
2 MID-ATLANTIC COAST	17	209	60.1	.037	1	0.007	2.16	94.1	86.7	90.4	9.7	134	91	107	119	140	161	211	270	347	384	420	1.1	1.6
3 SOUTHEAST	18	200	60.2	.037	0	-	2.33	94.1	86.9	90.5	9.3	136	92	108	121	142	163	213	273	350	383	420	1.0	1.5
4 APPALACHIAN	17	171	60.6	.037	1	.015	2.12	93.9	86.3	90.1	9.9	133	89	105	118	139	161	209	265	342	381	422	1.1	1.5
5 MICHIGAN	13	158	59.7	.047	2	.007	1.85	94.1	86.2	90.2	10.1	133	89	104	118	140	163	213	267	344	379	421	.9	1.5
6 NORTH ILLINOIS	14	64	59.6	.048	2	.001	1.91	94.1	86.3	90.2	9.9	133	92	105	118	140	163	212	264	343	382	424	1.0	1.8
7 CENTRAL MISSISSIPPI	20	107	59.7	.039	1	.003	1.86	93.9	86.3	90.1	9.5	136	89	106	119	142	167	217	271	349	386	421	.9	1.8
8 LOWER MISSISSIPPI	19	121	60.7	.044	0	-	2.54	93.9	86.8	90.4	9.0	137	91	110	122	142	163	209	265	347	378	420	1.0	1.4
9 NORTH PLAINS	12	45	60.8	.050	0	-	2.06	92.7	85.2	89.0	9.5	132	90	104	116	136	156	202	255	335	374	418	1.0	1.5
10 CENTRAL PLAINS	12	83	61.7	.045	1	-	1.83	92.6	85.3	89.0	8.7	139	95	111	123	143	163	208	259	338	382	417	1.0	1.4
11 SOUTH PLAINS	20	135	61.4	.033	1	.000	2.31	93.0	86.3	89.7	8.9	138	92	109	121	142	162	209	262	340	381	417	1.0	1.7
12 SOUTH TEXAS	15	88	60.8	.032	1	.004	2.35	93.8	86.6	90.2	8.9	138	93	110	124	143	162	207	262	338	373	409	1.0	1.5
13 SOUTH MOUNTAIN STATES	16	232	60.2	.042	2	.000	1.92	92.4	85.2	88.8	8.5	142	96	115	129	149	169	213	265	345	382	417	.9	1.3
14 NORTH MOUNTAIN STATES	13	129	60.9	.050	1	.004	1.78	93.3	85.3	89.3	9.5	135	88	106	119	141	163	210	262	340	376	416	.9	1.9
15 PACIFIC NORTHWEST	9	59	61.1	.017	2	.000	2.08	93.0	86.6	89.8	10.1	133	90	106	119	142	165	211	260	337	370	409	1.0	1.9
16 NORTH CALIFORNIA	11	72	58.7	.033	1	.001	1.53	93.6	85.2	89.4	8.7	141	95	112	127	148	170	216	268	339	368	409	1.0	1.6
17 SOUTH CALIFORNIA	11	92	58.5	.046	1	.001	1.40	93.3	85.2	89.3	8.9	139	93	110	124	144	166	212	270	342	372	412	1.0	1.5
AVERAGE			60.3	.040	1	.004	2.01	93.5	86.1	89.8	9.3	135	91	108	121	142	163	211	265	342	378	417	1.0	1.6

SAMPLES 2,017

TABLE 6.1-3

MOTOR GASOLINE SURVEY, WINTER 1971-72 AVERAGE DATA FOR BRANDS IN EACH DISTRICT

PREMIUM-PRICE GASOLINE

DISTRICT NO. AND NAME	NO. OF BRANDS	SAMPLES	GR., ASTM D287 API	SULF, ASTM D1266 WT %	GUM, ASTM D381 MG	LEAD, ASTM D526 G/GAL	OCTANE NUMBER RES, ASTM D2699	OCTANE NUMBER MOT, ASTM D2700	OCTANE NUMBER R+M --- 2	RVP, ASTM D323 LB	DISTILLATION, ASTM D86 TEMPERATURE, F (CORRECTED TO 760 MM HG) IBP	PERCENT EVAPORATED 5	10	20	30	50	70	90	95	EP	RES LOSS %	RES LOSS %
1 NORTHEAST	15	82	61.5	0.021	1	2.46	100.3	92.1	96.2	12.7	80	90	104	124	149	206	257	319	348	390	1.0	2.9
2 MID-ATLANTIC COAST	19	267	61.5	.024	1	2.37	100.4	92.4	96.4	13.0	80	91	103	125	151	209	257	323	351	394	.9	2.9
3 SOUTHEAST	20	203	61.5	.016	1	2.56	100.2	92.4	96.3	11.6	83	97	107	130	155	207	254	325	353	397	1.1	2.2
4 APPALACHIAN	20	186	63.1	.021	1	2.20	100.1	92.8	96.5	12.9	82	93	104	126	154	207	252	319	351	395	.9	3.2
5 MICHIGAN	17	108	63.8	.017	1	2.27	99.8	92.6	96.2	12.8	81	91	104	128	156	210	250	320	355	400	.9	3.1
6 NORTH ILLINOIS	14	82	64.3	.026	1	2.29	99.6	92.8	96.2	12.7	82	91	107	130	155	210	250	323	354	400	.8	2.9
7 CENTRAL MISSISSIPPI	21	130	62.1	.024	-	2.55	99.9	92.6	96.3	12.5	81	92	108	132	159	216	259	327	358	401	.9	2.4
8 LOWER MISSISSIPPI	20	135	62.8	.029	1	2.69	100.1	92.3	96.2	12.0	86	99	110	132	159	208	251	322	355	400	1.1	1.9
9 NORTH PLAINS	15	51	67.7	.041	-	2.38	99.1	92.7	95.9	12.0	82	97	113	139	166	209	243	318	344	396	.7	2.0
10 CENTRAL PLAINS	21	155	64.0	.032	1	2.30	99.6	92.3	96.0	11.4	83	97	112	135	160	210	250	320	354	403	.9	1.7
11 SOUTH PLAINS	20	140	63.9	.028	1	2.58	99.6	92.9	96.3	11.9	85	99	112	136	163	213	255	328	363	408	1.0	1.8
12 SOUTH TEXAS	16	89	62.0	.015	1	2.58	100.0	92.3	96.2	11.4	84	98	109	131	153	203	250	316	345	391	1.0	1.9
13 SOUTH MOUNTAIN STATES	16	263	63.1	.027	2	2.43	98.4	91.3	94.9	11.3	86	99	113	137	162	212	256	329	364	405	1.0	1.7
14 NORTH MOUNTAIN STATES	14	112	66.3	.047	1	2.24	99.7	91.7	95.7	12.9	84	95	108	134	162	210	244	318	356	398	.9	3.3
15 PACIFIC NORTHWEST	10	61	64.0	.012	1	2.14	99.9	92.0	96.0	12.0	85	96	108	128	152	202	246	308	338	383	1.0	2.3
16 NORTH CALIFORNIA	11	70	59.6	.016	1	2.52	99.9	92.0	96.0	11.4	87	96	111	136	162	211	257	322	349	396	.9	2.6
17 SOUTH CALIFORNIA	11	94	58.4	.041	1	2.75	100.0	91.6	95.9	10.7	88	102	117	141	167	218	263	325	356	405	1.0	2.1
AVERAGE			62.9	.026	1	2.43	99.8	92.3	96.1	12.1	83	95	109	132	158	209	253	321	353	398	.9	2.4

SAMPLES 2,228

REGULAR-PRICE GASOLINE

DISTRICT NO. AND NAME	NO. OF BRANDS	SAMPLES	GR., ASTM D287 API	SULF, ASTM D1266 WT %	GUM, ASTM D381 MG	LEAD, ASTM D526 G/GAL	OCTANE NUMBER RES, ASTM D2699	OCTANE NUMBER MOT, ASTM D2700	OCTANE NUMBER R+M --- 2	RVP, ASTM D323 LB	DISTILLATION, ASTM D86 TEMPERATURE, F (CORRECTED TO 760 MM HG) IBP	PERCENT EVAPORATED 5	10	20	30	50	70	90	95	EP	RES LOSS %	RES LOSS %
1 NORTHEAST	15	75	63.1	0.039	1	1.89	95.2	87.5	91.4	12.6	80	93	104	124	146	196	257	336	367	401	1.0	2.5
2 MID-ATLANTIC COAST	21	277	62.3	.039	1	1.89	94.9	87.1	91.0	12.6	81	92	104	125	148	199	260	340	370	408	1.0	2.7
3 SOUTHEAST	19	203	62.1	.043	1	2.16	94.6	86.9	90.8	11.4	83	98	109	129	151	199	255	337	369	405	1.1	1.9
4 APPALACHIAN	24	190	62.6	.034	1	1.90	94.8	87.1	91.0	12.9	82	93	103	124	146	196	256	337	370	411	1.0	2.8
5 MICHIGAN	17	115	62.8	.033	1	1.72	94.8	86.7	90.8	13.0	81	90	101	122	146	199	257	337	370	410	.9	2.9
6 NORTH ILLINOIS	14	81	63.3	.056	2	1.83	94.4	86.9	90.7	13.1	83	91	104	123	145	196	256	335	367	406	.9	2.5
7 CENTRAL MISSISSIPPI	20	126	62.9	.036	-	2.01	94.4	86.9	90.7	12.6	82	92	106	126	147	199	257	343	376	414	.9	2.1
8 LOWER MISSISSIPPI	19	131	63.0	.039	1	2.13	94.3	86.7	90.5	12.1	84	98	109	127	149	195	252	336	369	410	1.1	1.7
9 NORTH PLAINS	13	45	63.3	.066	-	1.49	92.4	84.5	88.5	12.2	81	95	108	129	152	201	260	345	367	414	.9	1.5
10 CENTRAL PLAINS	21	147	63.1	.045	1	1.93	93.4	86.4	89.9	11.5	84	99	111	131	152	199	254	332	366	406	.9	1.6
11 SOUTH PLAINS	20	134	63.6	.041	1	2.17	93.3	86.5	89.9	11.9	85	98	110	129	150	200	256	338	374	413	1.1	1.6
12 SOUTH TEXAS	16	84	63.6	.027	2	2.40	94.4	87.0	90.7	11.1	87	99	111	130	150	195	248	325	356	398	1.2	1.5
13 SOUTH MOUNTAIN STATES	16	255	63.0	.043	2	1.82	92.3	85.6	89.0	11.2	87	100	113	134	155	201	254	338	374	414	1.0	1.8
14 NORTH MOUNTAIN STATES	14	137	62.7	.062	2	1.38	93.8	86.2	90.0	12.9	84	95	106	126	150	199	254	333	371	404	1.0	2.7
15 PACIFIC NORTHWEST	10	61	63.9	.024	1	2.03	93.4	87.1	90.3	12.3	82	95	106	125	148	196	247	334	373	408	1.0	2.2
16 NORTH CALIFORNIA	11	71	61.2	.031	1	1.77	93.9	86.0	90.0	11.1	87	99	113	135	157	204	256	327	358	401	.9	2.2
17 SOUTH CALIFORNIA	11	92	60.1	.095	1	1.50	93.8	85.5	89.7	10.9	88	101	116	137	159	208	263	342	373	411	1.0	2.2
AVERAGE			62.7	.044	1	1.88	94.0	86.5	90.3	12.1	84	96	108	128	150	199	255	336	369	408	1.0	2.1

SAMPLES 2,224

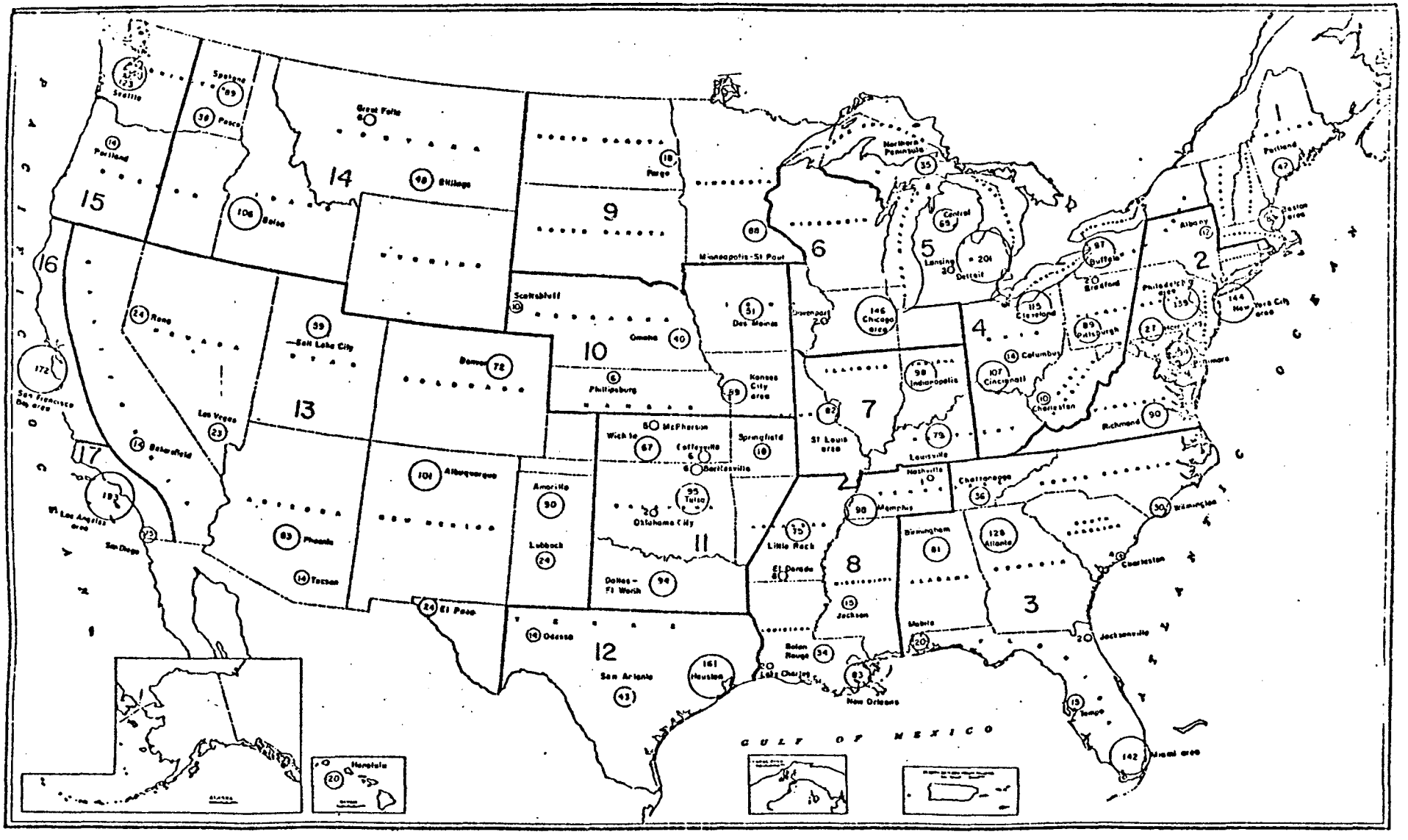

FIGURE 6.1-2 MAP SHOWING LOCATIONS AND NUMBERS OF SAMPLES FOR THE NATIONAL MOTOR GASOLINE SURVEY, SUMMER 1973

INT.-BU.OF MINES,PGH.,PA. 1918

of low-boiling blending stocks, which has resulted in increased volatility of motor gasoline. The increase in gasoline volatility has greatly improved engine performance characteristics. The increased volatility has, however, made modifications to the fuel systems of vehicles necessary to prevent vapor lock and it has also increased evaporative losses. Figure 6.1-3 shows the trend toward more volatile motor gasolines from 1946-1970.

Aviation gasoline is also composed of blends of petroleum distillates which are combined under carefully controlled conditions to yield the proper volatility and combustion characteristics for reliable airplane engine performance. Quality control in aviation gasoline is more critical than in motor gasoline, since engine failure is a more serious problem. The main quality control parameters are volatility, freezing point, heat of combustion, and oxygen stability.

6.2 The Gasoline Marketing Network

Figure 6.2-1 shows the basic flow of motor gasoline from refinery storage to the vehicle refueling stations in the U.S. marketing network. The flow of aviation gasoline generally follows this pattern only to the terminal from which it is transported to an airport for final distribution. In some cases, however, aviation gasoline may be transported directly to the airport from the refinery through pipelines.

Gasoline is transported from refinery storage to terminals by pipelines, tankers and barges, or rail tank cars. In 1973, pipelines transported over 70% of the gasoline shipped to bulk terminals.

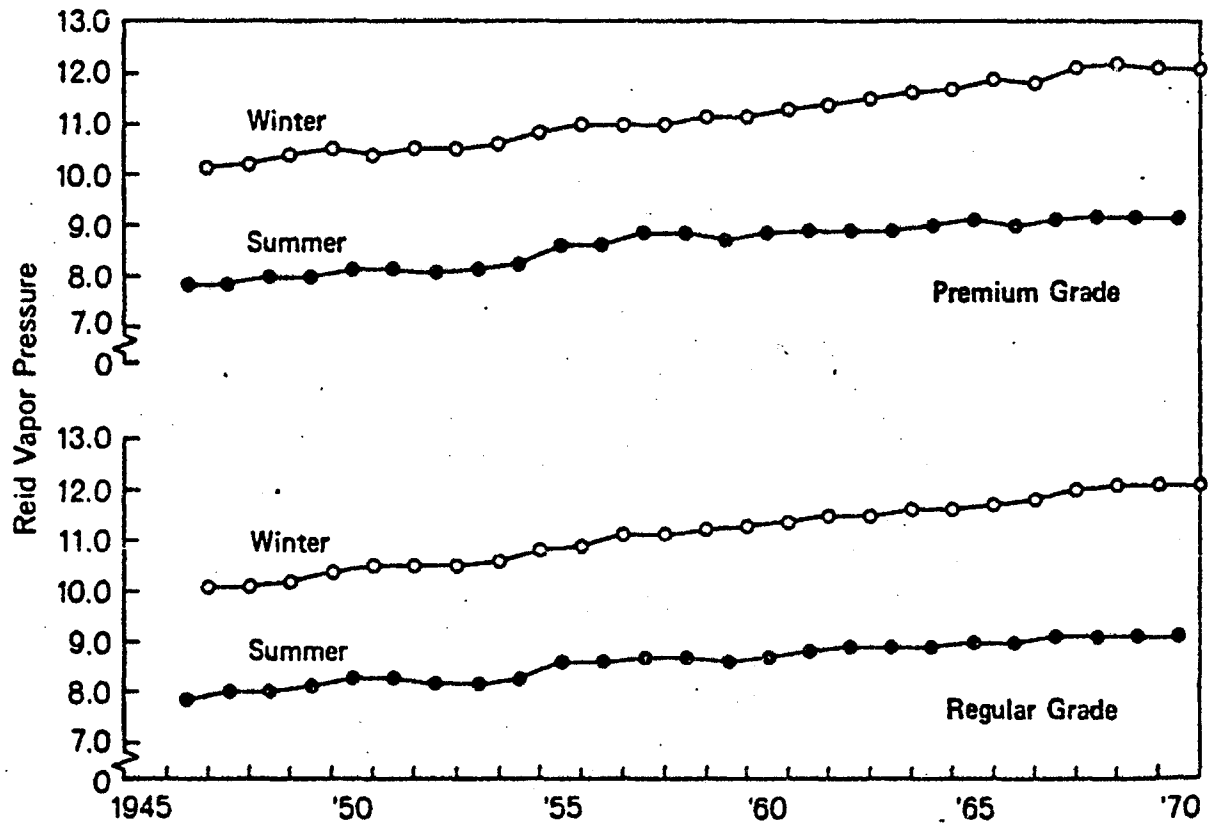

FIGURE 6.1-3

Motor Gasoline Volatility Trends

Source: U.S. Bureau of Mines, "Petroleum Products Survey," *Mineral Industry Surveys* (June 1971).

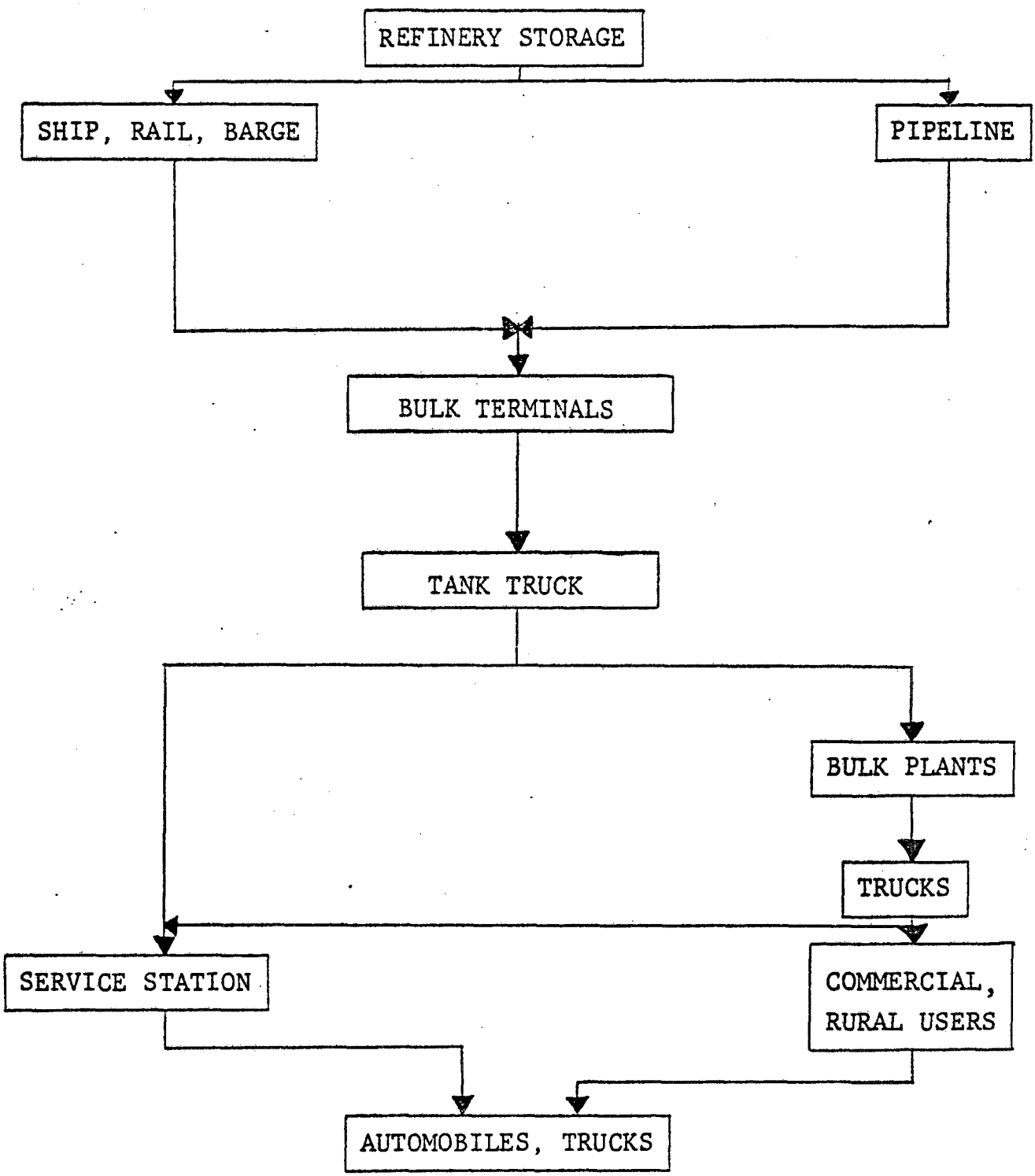

FIGURE 6.2-1

The Gasoline Marketing Distribution System In The United States

Bulk stations are intermediate distribution points in the marketing network. Gasoline from 8,000-gallon terminal transports is unloaded into storage tanks at the bulk stations, then reloaded into smaller tank trucks, usually in the 2,000-gallon category, for distribution to service stations and to commercial and rural users. In many areas, gasoline is delivered directly from terminals to service stations. Table 6.1-1 lists the number of wholesale marketing facilities in each state. Gasoline is unloaded into underground storage tanks at the more than 300,000 domestic service stations and other gasoline retail outlets.* Table 6.1-1 lists the number of service stations in each state. Sizes of service stations vary widely, from 5,000 to 500,000 gallons per month of gasoline dispensed. Average service station size is about 30,000 gallons per month. Other gasoline retail outlets range from 2,000-3,000 gallons per month to as much as 150,000 gallons per month.

Sizes, numbers, and operations of marketing terminals, bulk plants and service stations are described in more detail in the following sections. The main sources of hydrocarbon emissions from these facilities will be briefly mentioned. Later sections will address emissions in a more detailed manner.

---

*A service station is defined as a retail outlet with more than 50% of its dollar value coming from the sale and service of petroleum products. Retail outlets not meeting this definition are grouped together as "other gasoline retail outlets" or "nonservice station" outlets.

6.2.1 Bulk Terminals

The primary distribution facility in the gasoline marketing network is the bulk terminal. Gasoline products arrive at the bulk terminal by pipeline and are stored in large above-ground storage tanks. From these storage tanks the gasoline is loaded into tank trucks and transported to smaller bulk loading stations and to service stations. One million gallons of gasoline may pass through one of the larger bulk terminals daily.

Statistics from the 1967 Census of Business show that there were 2,701 terminals in that year. Total national liquid storage capacity of motor gasoline at terminals was 6.2 billion gallons with an average capacity of 2.3 million gallons per terminal (US-031).

Generally, the gasoline storage tanks are large enough that they are subject to regulations requiring that they be equipped with floating roofs. Hydrocarbon emissions from tanks of this design are limited to vapors escaping past the wall seals and to gasoline evaporating from the wetted walls as the liquid level is lowered. These minor hydrocarbon emissions are generally less than 0.3 gallons/1,000 gallons handled (DU-001). Table 6.2-1 contains a compilation of the nation's bulk storage capacities as a function of tank size (US-031).

Hydrocarbon emissions from the tank truck loading racks are potentially much greater than those from the storage tanks at bulk terminals. As the empty tank trucks are filled, the hydrocarbons in the vapor space are displaced to the atmosphere, unless vapor collection facilities have been provided.

TABLE 6.2-1

U.S. BULK STORAGE CAPACITY BY TANK SIZE

(US-031)

Tank Size	Storage Capacity (10^3 gal)
Less than 42,000 gallons	95,975
42,000 - 62,000 gallons	242,837
63,000 - 83,000 gallons	249,542
84,000 - 104,000 gallons	137,078
105,000 - 209,000 gallons	214,148
210,000 - 1,049,000 gallons	186,960
1,050,000 - 2,099,000 gallons	221,792
2,100,000 - 6,299,000 gallons	1,386,821
6,300,000 - 20,999,000 gallons	2,357,165
Greater than 21,000,000 gallons	2,120,770

The quantity of hydrocarbons contained in the displaced vapors is dependent on the Reid Vapor Pressure, temperature, method of tank filling, and the conditions under which the truck was previously loaded. Emission factors have been developed to estimate the quantity of hydrocarbon emissions from loading operations. Figure 6.2-2 is a schematic drawing of liquid and vapor flow through a typical bulk terminal.

6.2.2 Bulk Stations

Bulk loading stations are secondary distribution facilities which receive gasoline from bulk terminals by large tank trucks, store the gasoline in somewhat smaller above-ground storage tanks, and subsequently dispense the gasoline via smaller tank trucks to local farms, businesses, and service stations. The 1967 Census of Business indicates that there were 26,338 bulk stations in that year. Liquid storage capacity of gasoline at bulk stations was 1.0 billion gallons with an average capacity of 40,000 gallons per bulk station (US-031).

Hydrocarbon emissions in bulk stations are generated from the storage tanks and from the tank truck loading operations. Emission factors mentioned previously for the loading of tank trucks at bulk terminals also apply to the hydrocarbon emissions generated during the loading of gasoline at bulk loading stations.

Because the storage tanks are often horizontal and cannot be fitted with floating roofs, or because they are below the size at which floating roof regulations apply, the storage tanks at bulk loading stations are generally uncontrolled and are thus a significant source of hydrocarbon emissions.

The emissions from bulk station storage tanks may be divided into two categories: breathing losses and working losses. Breathing losses are associated with the thermal expansion and contraction

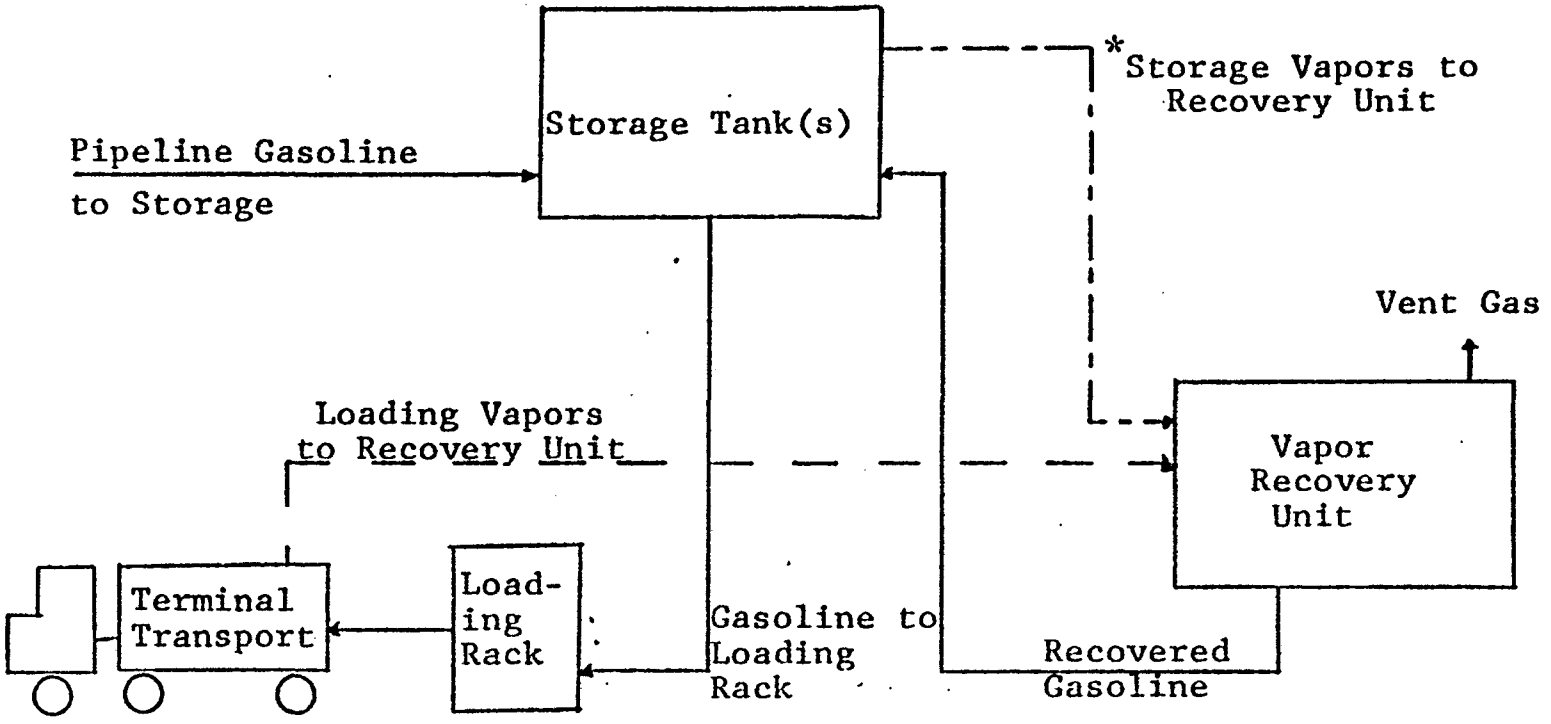

*In terminals using floating roof tanks, vapor lines from storage tanks to the vapor recovery unit are not required for the control of storage tank vapor losses.

FIGURE 6.2-2

Vapor and Liquid Flow in a Typical Bulk Terminal

of the vapor space resulting from the daily temperature cycle. Working losses are associated with changes in the liquid level of the tank. Although the magnitude of these hydrocarbon emissions is dependent on numerous factors including tank parameters, Reid Vapor Pressure and weather conditions, they can be estimated by applying appropriate emission factors. Figure 6.2-3 is a schematic drawing showing vapor and liquid flow through a typical bulk plant.

6.2.3 Service Stations

In 1973 there were 218,000 service stations (NA-168). A gasoline service station is defined by the U. S. Department of Commerce as a retail outlet with more than 50% of its dollar volume coming from the sale and service of petroleum products. As described in the following section on marketing trends, the total number of gasoline service stations is undergoing rapid change. A survey conducted in May and June 1974, by Audits and Surveys Inc., a New York, firm reveals that in 1974 there are 196,000 U. S. service stations, a total which is down 9.1% from their 1973 survey figure of 216,000 (AU-020).

Detailed breakdowns of service station sizes as functions of sales volumes are difficult to obtain due to the reluctance of oil companies to make this information public. In 1973, average monthly service station throughput was 30,800 gallons per month according to an estimate by Lundberg Survey Inc. (LU-044).

An EPA analysis of service station sales statistics from the 1967 Census of Business reveals the following totals for the number of stations in various size categories (MA-314).

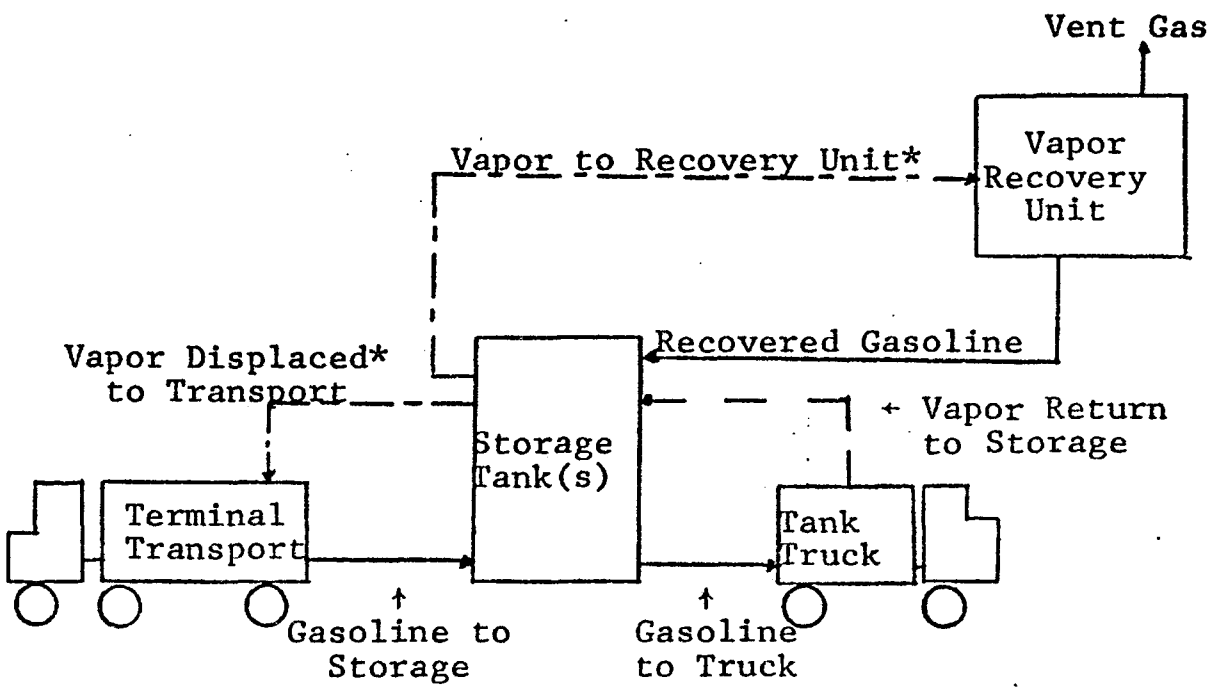

*Vapor emissions from bulk plants may potentially be controlled by vapor displacement, in which case the recovery unit would be eliminated.

FIGURE 6.2-3

Vapor and Liquid Flow in a Typical Bulk Plant

Service Station Sizes Gallons/Year Sold	Number Stations in 1967
Less than 150,000	54,100
150,000-200,000	17,100
200,000-250,000	21,200
250,000-300,000	25,500
Larger than 300,000	98,100
	216,000

Service stations are the final facility in the gasoline marketing network. At the stations, gasoline is received by tank truck, stored in underground tanks, and dispensed to automobile fuel tanks. Unless a vapor collection system is provided, hydrocarbons in the storage tank vapor space are displaced as the tank is filled with gasoline from the tank truck. The quantity of these emissions is dependent on filling rate, filling method, Reid Vapor Pressure, and the system temperature.

Breathing losses from the underground gasoline storage tanks are another source of hydrocarbon emissions. The losses from underground service gasoline storage tanks has been estimated at 1 lb/1,000 gallons throughput (CA-155). Because the tanks are underground, breathing losses due to diurnal temperature effects are minimized.

Automobile refueling is the final source of hydrocarbon emissions from gasoline marketing operations. As with the filling of tank trucks or underground storage tanks, the hydrocarbon emissions are generated from gasoline vapors which are displaced as the fuel tank is filled. As previously mentioned, the quantity of these hydrocarbon emissions is dependent on the temperature and the Reid Vapor Pressure of the fuel. The uncontrolled emissions have, however, been estimated

to be about 11 lbs/1,000 gallons of gasoline throughput. Figure 6.2-4 is a schematic drawing of vapor and liquid flow through a typical service station.

6.3 Industry Trends

6.3.1 U. S. Gasoline Consumption

In 1973, U. S. consumption of gasoline was 106 billion gallons, a 4.7 percent increase over 1972 consumption. As indicated in Figure 6.3-1, the number of gallons of gasoline consumed annually between 1968 and 1973 has increased steadily with an average annual increase of 5.2%. This increase may be attributed to two factors: (1) an increase in the number of vehicles on the road, and (2) a gradual increase in the number of miles traveled per vehicle combined with an accompanying decrease in the number of miles achieved per gallon through 1973 model automobiles.

America, a mobile society, has become increasingly more dependent on the automobile as a means of transportation in the last two decades. This trend is demonstrated by the steady growth in annual consumption of energy by automobiles as compared with a comparable decrease in energy consumption by public transportation (CI-005). Current statistics reflect that eight out of ten American household own at least one car and three out of ten own two cars (FO-027).

Roughly 13 million new drivers have been registered and 17 million motor vehicles have been added to U. S. roads since 1969. A state-by-state breakdown of these figures as compared with gasoline consumption is given in Table 6.3-1.

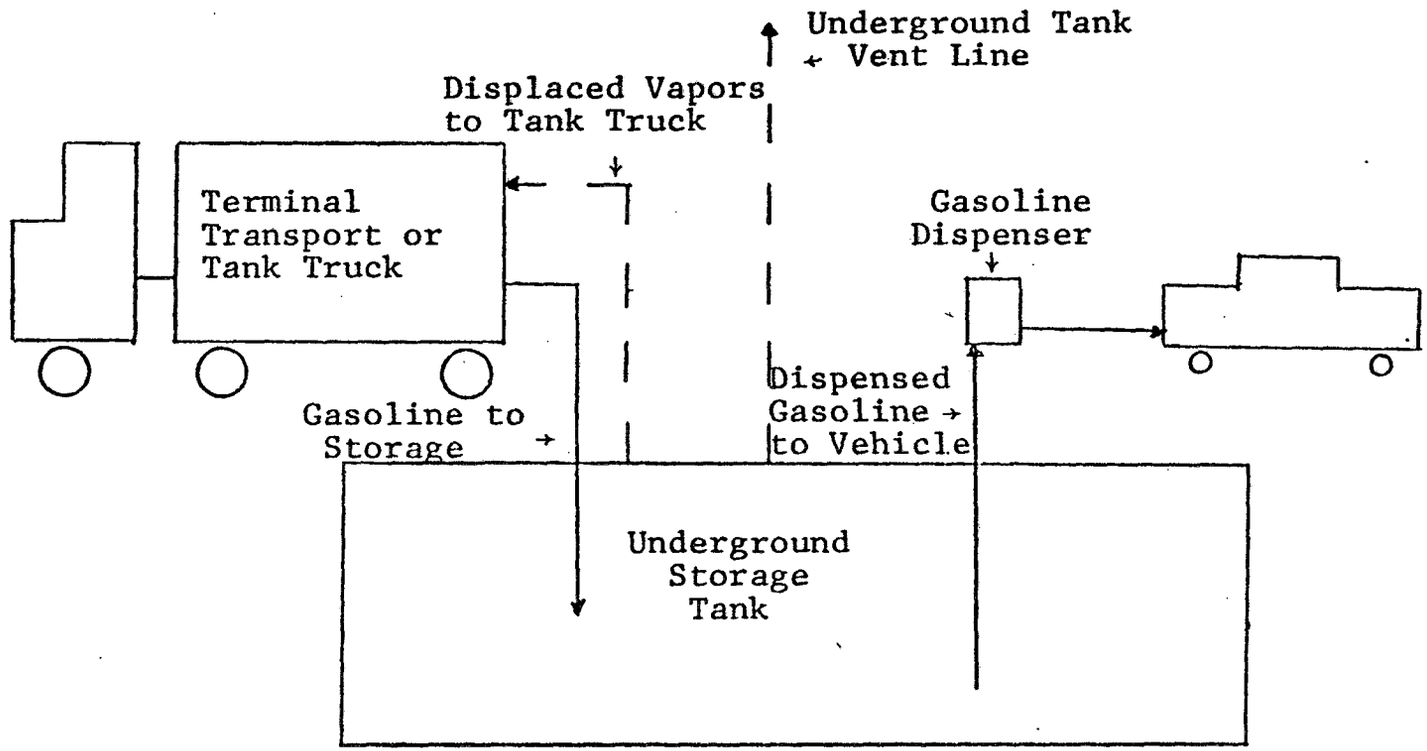

FIGURE 6.2-4

Vapor and Liquid Flow in a Typical Service Station

FIGURE 6.3-1

U.S. GASOLINE CONSUMPTION

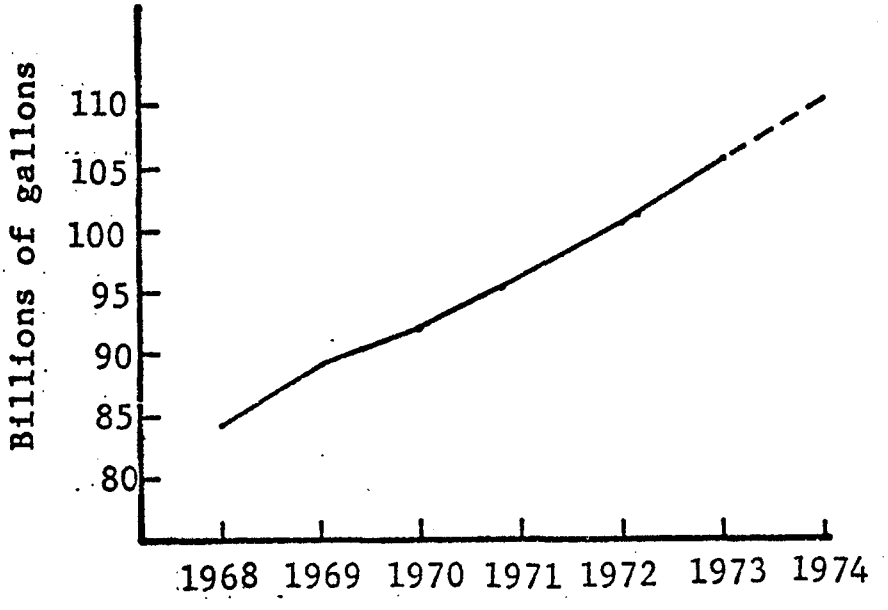

SOURCE: NPN Mid-May Factbook, 1968-74.

TABLE 6.3-1

GASOLINE CONSUMPTION BY STATE

STATE	POPULATION[1] 1972	REGISTERED MOTOR VEHICLES[2] 1972	1973 (estimated)	% Increase	GASOLINE CONSUMPTION[2] Add 000 gal. 1972	1973	% Increase
ALABAMA	3,510,000	2,227,293	2,363,000	6.1	1,811,609	1,901,914	5.0
ALASKA	325,000	148,756	161,000	8.2	122,639	135,754	10.7
ARIZONA	1,945,000	1,301,870	1,418,000	8.9	1,105,586	1,211,826	9.6
ARKANSAS	1,978,000	1,070,295	1,096,000	2.4	1,175,865	1,124,473	4.6
CALIFORNIA	20,468,000	12,852,228	13,445,000	4.6	10,128,458	10,425,236	2.9
COLORADO	2,357,000	1,679,702	1,805,000	7.5	1,300,450	1,362,836	4.8
CONNECTICUT	3,082,000	1,860,385	1,939,000	4.2	1,336,043	1,359,316	1.7
DELAWARE	565,000	322,971	341,000	5.6	292,733	308,648	5.4
DISTRICT OF COLUMBIA	748,000	259,492	252,000	-2.9	243,253	259,339	6.6
FLORIDA	7,259,000	4,835,986	5,131,000	6.1	3,956,142	4,379,689	10.7
GEORGIA	4,720,000	2,959,454	3,157,000	6.7	2,688,489	3,082,334	14.6
HAWAII	809,000	447,409	473,000	5.7	267,245	276,736	3.6
IDAHO	756,000	549,834	596,000	8.4	463,143	481,714	4.0
ILLINOIS	11,251,000	5,643,853	5,867,000	4.0	4,852,112	5,063,378	4.4
INDIANA	5,244,000	2,908,543	2,959,000	1.7	2,767,014	2,867,475	3.6
IOWA	2,883,000	1,917,075	1,985,000	3.5	1,673,848	1,821,011	8.8
KANSAS	2,257,000	1,691,501	1,818,000	7.5	1,450,625	1,433,253	-1.2
KENTUCKY	3,299,000	1,967,620	2,106,000	7.0	1,633,516	1,760,172	7.8
LOUISIANA	3,693,000	1,942,263	2,069,000	6.5	1,704,022	1,793,721	5.3

TABLE 6.3-1 (Cont.)
GASOLINE CONSUMPTION BY STATE

STATE	POPULATION[1] 1972	REGISTERED MOTOR VEHICLES[2] 1972	1973 (estimated)	% Increase	GASOLINE CONSUMPTION[2] Add 000 gal. 1972	1973	% Increase
MAINE	1,029,000	564,782	582,000	3.0	525,300	543,737	3.5
MARYLAND	4,056,000	2,130,458	2,272,000	6.6	1,785,969	1,852,382	3.7
MASSACHUSETTS	5,787,000	2,821,596	2,944,000	4.3	2,290,313	2,360,033	3.0
MICHIGAN	9,082,000	5,010,537	5,187,000	3.5	4,585,129	4,774,714	4.1
MINNESOTA	3,860,000	2,368,127	2,499,000	5.5	2,109,913	2,155,860	2.2
MISSISSIPPI	2,250,000	1,249,152	1,313,000	5.1	1,204,810	1,237,932	2.7
MISSOURI	4,753,000	2,618,164	2,719,000	3.9	2,667,902	2,742,295	2.8
MONTANA	719,000	584,116	652,000	11.6	457,792	474,804	3.7
NEBRASKA	1,525,000	1,080,885	1,141,000	5.6	917,215	936,994	2.2
NEVADA	527,000	399,046	428,000	7.3	374,164	390,979	4.5
NEW HAMPSHIRE	771,000	436,158	468,000	7.3	393,322	405,147	3.0
NEW JERSEY	7,367,000	3,858,631	4,094,000	6.1	3,188,965	3,266,842	2.4
NEW MEXICO	1,065,000	710,765	758,000	6.6	660,638	702,265	6.3
NEW YORK	18,366,000	7,006,452	7,113,000	1.5	6,056,144	6,318,982	4.3
N. CAROLINA	5,214,000	3,219,776	3,456,000	7.3	2,767,481	2,874,027	3.8
N. DAKOTA	632,000	463,622	489,000	5.5	429,682	436,977	1.7
OHIO	10,739,000	6,224,278	6,359,000	2.2	4,982,198	5,286,197	6.1
OKLAHOMA	2,634,000	1,887,210	1,978,000	4.8	1,666,744	1,729,329	3.8
OREGON	2,182,000	1,496,115	1,619,000	8.2	1,198,744	1,247,483	4.1

TABLE 6.3-1 (Cont.)
GASOLINE CONSUMPTION BY STATE

STATE	POPULATION[1] 1972	REGISTERED MOTOR VEHICLES[2] 1972	1973 (estimated)	% Increase	GASOLINE CONSUMPTION[2] Add 000 gal. 1972	1973	% Increase
PENNSYLVANIA	11,926,000	6,311,330	6,655,000	5.4	4,811,065	4,874,664	1.3
RHODE ISLAND	968,000	536,284	566,000	5.5	413,405	415,762	.6
S. CAROLINA	2,665,000	1,497,389	1,608,000	7.4	1,412,207	1,478,414	4.7
S. DAKOTA	679,000	462,613	484,000	4.6	470,521	479,785	2.0
TENNESSEE	4,031,000	2,293,635	2,439,000	6.3	2,129,984	2,296,340	7.8
TEXAS	11,649,000	7,315,711	7,708,000	5.4	7,093,777	7,497,154	5.7
UTAH	1,126,000	740,507	789,000	6.5	689,017	706,166	2.5
VERMONT	462,000	261,295	273,000	4.5	243,508	246,285	1.1
VIRGINIA	4,764,000	2,602,773	2,815,000	8.2	2,409,315	2,611,693	8.4
WASHINGTON	3,443,000	2,242,060	2,379,000	6.1	1,648,222	1,730,908	5.0
W. VIRGINIA	1,781,000	873,606	919,000	5.2	736,772	778,359	5.6
WISCONSIN	4,520,000	2,378,836	2,500,000	5.1	2,212,202	2,155,014	2.7
WYOMING	345,000	273,608	291,000	6.4	288,912	309,244	7.0
U.S. TOTAL	208,232,000	118,506,048	124,478,000	5.0	101,685,524	106,474,172	4.7

SOURCES: [1] Statistical Abstract of the U.S., Table 13, "Population-States: 1960-1972".
[2] NPN Mid-May Factbook, 1974. (NA-168).

In addition to increased dependence on the automobile, gasoline demand has been affected by a loss of fuel economy in recent years. In 1963 the average passenger car got 14.4 miles per gallon; in 1973 this figure was estimated to be 13.3 miles per gallon (NA-168). This decrease in fuel efficiency has been attributed to the increased weight of automobiles, the increased prevalence of accessory items such as air conditioning, power steering, automatic transmissions, and emission control devices on post-1970 model cars. The use of the catalytic converter as an emission control device will affect the number of miles per gallon. It is expected that future cars will be equipped with catalytic converters. It will not yet be possible to assess the impact of catalytic converters on overall gasoline consumption, however. Future fuel economy measures would include an increased production of lighter cars and cars with smaller engines.

The increase in the average number of gallons consumed by passenger cars between 1969 and 1973 is indicated in Table 6.3-2. An increase in the average number of miles traveled is also shown. Fuel efficiency for cargo vehicles has remained relatively constant.

6.3.2 Gasoline Marketing Facilities

Bulk Terminals and Bulk Stations

Although 1972 Census of Business figures are not yet available, state totals published to date indicate that gasoline was being distributed in 1972 through fewer bulk stations and terminals than in 1967 (see Table 6.1-1). Direct contact with

TABLE 6.3-2

AVERAGE FUEL CONSUMPTION 1969-1973

	AVERAGE MILES TRAVELED/ VEHICLE		AVERAGE FUEL CON- SUMPTION/VEHICLE		AVERAGE MILES/ GALLON OF FUEL	
	Passenger Cars	All Vehicles	Passenger Cars	All Vehicles	Passenger Cars	All Vehicles
1969	9,782	9,969	718	821	13.6	12.15
1970	9,978	10,076	735	830	13.6	12.14
1971	10,121	10,198	746	838	13.6	12.16
1972	10,184	10,370	755	859	13.5	12.07
1973	10,184	10,370	766	864	13.3	12.07

SOURCE: U.S. Dept. of Transportation, Federal Highway Administration, Highway Statistics, 1969-72; 1973 - NPN Mid-May Factbook, 1974, (NA-168), and Radian estimates.

oil companies and industry associations has confirmed this preliminary assessment and indicated that the reduction is primarily in the number of bulk stations. These contacts have indicated that there is a current trend toward phasing out bulk stations for economic reasons. More gasoline deliveries will be made directly from terminals with large tank trucks; less from the disappearing bulk stations with small trucks. Storage volumes will be added at terminals to compensate for bulk station reductions. The decrease in number of bulk stations will not necessarily have a major impact on overall marketing operations, however.

Again, without the benefit of complete 1972 statistics, it is presumed that the combined sales volume at bulk stations and terminals has increased at a rate commensurate with the steady increase in gasoline consumption.

Service Stations

Two trends are evident when looking at gasoline marketing operations at service stations during the last five years:

(1) retail sales have increased

(2) the total number of service stations has decreased

These trends are charted in Figure 6.3-2.

National Petroleum News has documented the decline in service station construction. In 1973, the average oil company closed 750 stations and opened 97 (NA-168). The 1974 survey by Audits and Surveys Inc., confirms the continuation of

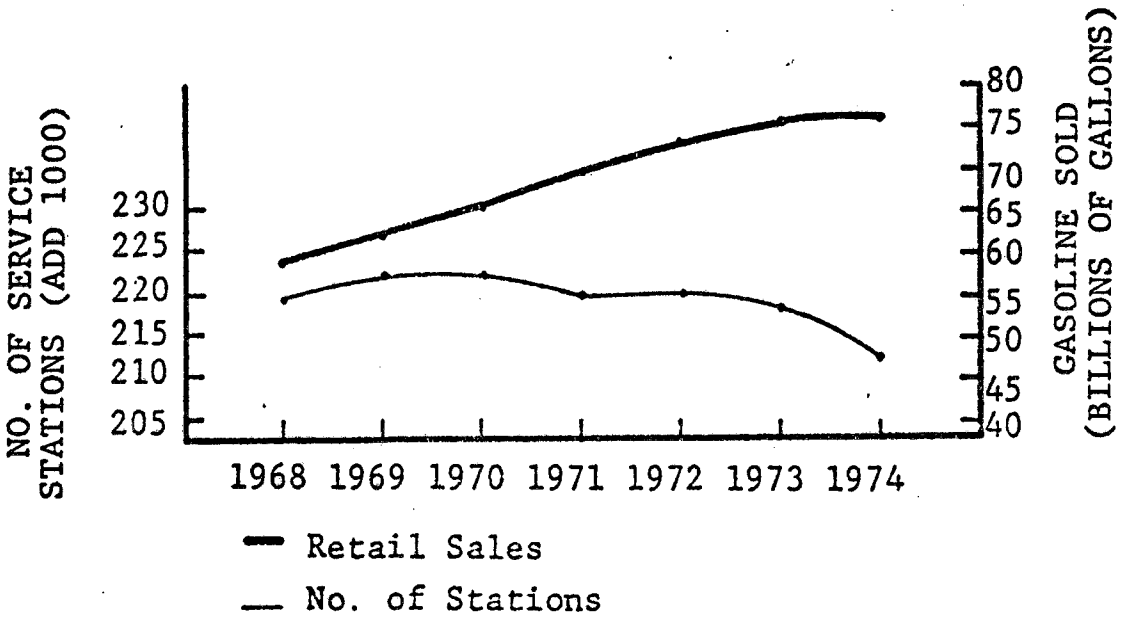

FIGURE 6.3-2

Marketing Trends at Gasoline Service Stations

Source: NPN Mid-May Factbook, 1974 (NA-168)

this trend in 1974 as previously mentioned. A review of selected major and independent oil company 1973 annual reports reinforces this picture. Operational policy for all companies reviewed included a program of closing those stations considered economically marginal. New construction programs are underway, however, to meet intensive growth demands.

Accompanying the decline in the number of service stations has been an increase in throughput per station to accommodate the increased volume of gasoline consumption nationally. As indicated in Table 6.3-3, passenger car gasoline sales have increased from 58.1 billion gallons in 1968 to an estimated 75.8 billion gallons per year in 1974. Service station dollar sales show an accompanying increase during this period.

TABLE 6.3-3

NUMBER OF GASOLINE SERVICE STATIONS AND SALES VOLUME

1968 - 1974

Year	Stations	Annual Nat'l Passenger Car Sales (Millions of Gallons)	Average Passenger Car Sales/Station (Gallons/Month)	Total Sales (Billions of Dollars)	% Increase In Sales (Dollars)
1968	219,100	58,127	22,100	24.5	---
1969	222,000	62,047	23,300	25.9	5.7
1970	222,000	65,297	24,500	28.0	8.1
1971	220,000	68,821	26,100	29.2	4.3
1972	220,000	73,121	27,700	31.0	6.2
1973	218,000	75,842	29,000	34.4	11.0
1974[2]	212,000	75,842	29,800	37.5	9.0

Source: NPN Mid-May Factbook, 1974 (NA-168).

[1]Gasoline service stations are defined as retail outlets with 50% or more of dollar volume coming from sale and service of petroleum products.

[2]1974 figures are NPN estimates.

6.4 Emissions

The gasoline marketing industry contributes hydrocarbon compounds to the atmosphere through the mechanism of evaporation during the many handling processes involved in transferring gasoline from the refinery to the automobile. In studying these evaporation losses it is important to assess the nature and magnitude of the problems associated with hydrocarbon emissions. Although the hydrocarbons from gasoline marketing do not contribute directly to smog and its adverse effects, several of the hydrocarbons do undergo reactions to form products which do produce undesirable smog. This section reviews the quantity of atmospheric hydrocarbons contributed by the gasoline marketing industry, the direct and indirect adverse effects of such hydrocarbon emissions, and the seasonal characteristics of these contributions.

6.4.1 Quantity of Hydrocarbon Emissions

In bulk terminal, bulk plant, or service station operations, the vapors displaced by the liquid during tank fills contains hydrocarbons which are emitted to the atmosphere. The quantities of these emissions are variable, depending on such factors as the Reid Vapor Pressure of the gasoline, the method of loading, the temperatures of the vapors, and the effects of geographical and meteorological conditions.

There are two basic categories of emissions which will be discussed for each facility of the marketing network; uncontrolled and controlled emissions. The term uncontrolled emissions will be used to refer only to the worst predicted case for each facility. There may be several cases comparing controlled emissions for each facility, however, due to the

variety of operations at each facility which affect the quantity of hydrocarbon emissions and which may be controlled.

Emission factors published by the Office of Air and Water Programs, U.S.E.P.A., July 1973, are used in the estimation of hydrocarbon emissions from gasoline marketing. Because these factors are based on throughputs of gasoline, flow rates through the gasoline marketing network had to be defined for calculational purposes. The bases of throughput definitions are as follows:

(1) Gasoline from Refineries to Terminals - Total domestic gasoline usage from Table 2.0-2 was used with the assumption that all gasoline was distributed through a terminal.

(2) Gasoline from Terminals to Bulk Stations - The ratio of bulk storage to terminal storage capacity (0.16) as reported in the 1967 Census of Business (US-031) was used to determine the amount of gasoline going to bulk stations.

(3) Gasoline from Terminals to Service Stations - The difference between total flow to terminals and gasoline flow to bulk stations was defined as the gasoline flow to service stations.

(4) Gasoline Distributed from Service Stations and Bulk Stations
Data from the Bureau of Public Roads, U.S. Department of Transportation

(US-143) was used. It was assumed that all fuel consumed by passenger cars, motorcycles, and single unit trucks was distributed through service stations while the remainder was distributed through bulk stations.

These definitions resulted in gasoline flow rates through each marketing facility as depicted in Figure 6.4-1.

6.4.1.1 Bulk Terminals

Emission Sources

The main bulk terminal emission sources are storage tanks and loading operations. Emissions from each of these sources will be considered separately.

Storage Tank Losses

Two basic types of tanks are used in terminals: fixed roof tanks and floating roof tanks. Each of these basic tank designs may, however, have several modifications associated with it.

Fixed Roof Tanks

Fixed roof tanks are subject to both breathing and working losses. Breathing losses are associated with expansion and contraction of the vapor space resulting from the daily temperature cycle. Working losses are associated with changes in the liquid levels in the tanks.

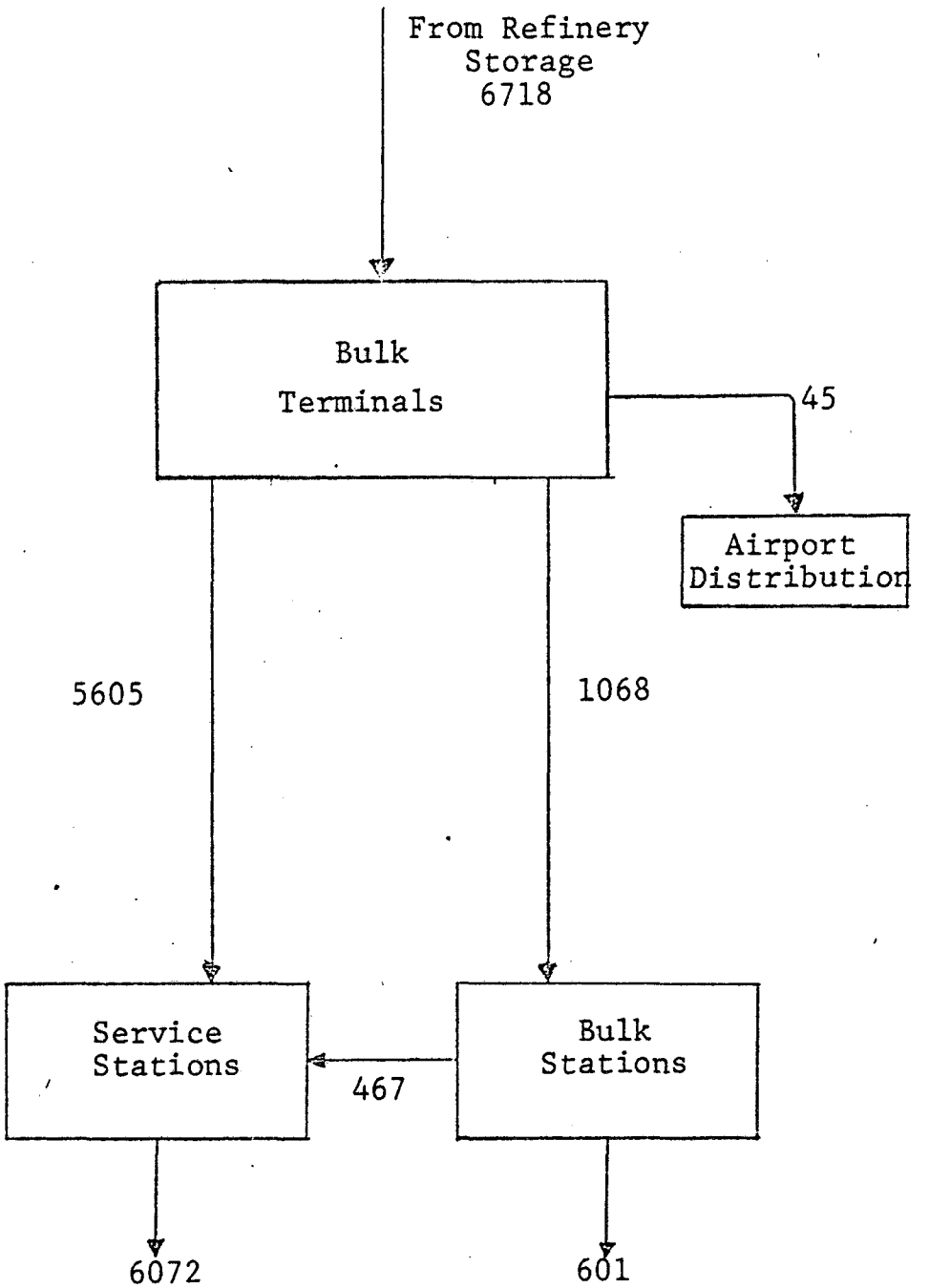

FIGURE 6.4-1

Gasoline Flow Through the Marketing Network
(All flows in 10^3bbl/day)

Floating Roof Tanks

Emissions from floating roof tanks come primarily from two sources: standing storage losses and wetting losses. Standing storage losses result from the improper fit of the seal and shoe to the tank shell and are the principal source of emissions of floating roof tanks. Wetting losses occur when a wetted tank wall is exposed to the atmosphere, but these are generally negligible.

Loading Operation Losses

During the loading operation vapor in the transport truck is displaced into the atmosphere as it is being filled from terminal storage. The amount of emissions generated is dependent primarily upon the type of loading operation.

There are two basic methods of filling transport tanks: top loading and bottom loading. The top loading procedure can be done with splash fill or submerged fill. With splash loading, gasoline is discharged into the upper part of the tank compartment through a short spout which never dips below the surface of the liquid. The free fall of the gasoline droplets promotes evaporation and may even result in liquid entrainment of some gasoline droplets in the expelled vapors.

With subsurface or submerged loading, gasoline is discharged into the tank compartment below the surface of liquid in the tank. This is accomplished for top loading operations by the use of a long spout or fixed pipe extending internally from the top tank entry to the bottom of the compartment. With direct bottom loading, transfer piping is connected directly to the tank bottom. This method achieves the same effect as submerged top loading while providing other advantages such as

ease of loading operations and safety. Consequently, many terminals have already been converted to bottom loading.

It should be noted that hydrocarbon emission levels from loading operations are partly influenced by the transports previous operation. If low volatility products were transported previously, or the transport was purged of hydrocarbon vapor prior to loading, the hydrocarbon emissions from gasoline loading may be significantly lower.

Emission Factors

The following emission factors were used to estimate hydrocarbon losses from bulk terminals (EN-071).

Storage Losses

Tank Type	Predicted Loss (lb/day per 1000 gal capacity)
Fixed Roof	
1. Breathing Losses	
New Tanks	0.22
Old Tanks	0.25
2. Working Losses	9.0 lb per 1000 gal throughput
Floating Roof	
New Tanks	0.033
Old Tanks	0.088

Loading Losses

Type Loading	Predicted Loss (lb per 1000 gal transferred)
Splash Loading	12.4
Submerged Loading	4.1

Predicted Emissions

The following hydrocarbon emissions from U.S. bulk terminals are predicted using the gasoline throughputs and storage capacities as previously defined (6.7 million barrels per day throughput with storage capacity of 148 million barrels).

The worst case, or total uncontrolled hydrocarbon emissions from U.S. bulk terminals results in expected emissions of 1.37 million tons/yr of hydrocarbons. This hypothetical case constitutes one for which all terminals would employ old fixed roof tanks and splash filling operations. The best control case, assuming no secondary vapor recovery facilities, results in calculated hydrocarbon emissions of 0.25 million tons/yr. This case represents a situation in which all U.S. bulk terminals employ new floating roof tanks and submerged filling operating.

Further control of hydrocarbon emissions is possible with the installation of secondary vapor recovery units. There are several units commercially available today which are claimed to achieve 90% control of all collected hydrocarbon vapors.

These units, depending on their size, are used in recovering vapors from either storage or loading operations or both. Generally, however, they are now being used to control emissions from loading operations. Floating roof tanks are in wide use in marketing terminals today, and these do not normally require secondary recovery.

Table 6.4-1 presents a comparison of the expected emissions from each type of storage tank and loading operation. Table 6.4-2 presents a summary of expected emissions for eight different cases of tankage and loading operations of U.S. bulk terminals, with uncontrolled emissions ranging from the worst case to the best case (described above). Included on the table also are the predicted emissions where vapor recovery units are added to capture emissions during loading operations.

TABLE 6.4-1

PREDICTED HYDROCARBON EMISSIONS FROM U.S. BULK TERMINAL SOURCES*

Emission Source	Emissions (tons/year)
(1) Fixed Roof Tanks	
Old Tanks	7.4×10^5
New Tanks	7.1×10^5
(2) Floating Roof Tanks	
Old Tanks	9.98×10^4
New Tanks	3.73×10^4
(3) Splash Loading Operations	6.34×10^5
(4) Submerged Loading Operations	2.09×10^5

*Basis of Calculations

148 million barrel storage capacity

6.7 million barrel/day throughput

TABLE 6.4-2

CASE COMPARISON OF PREDICTED HYDROCARBON EMISSIONS FROM U.S. BULK TERMINALS

Terminal Operating Conditions	Predicted Emissions (10^6 tons/yr)	Percent Reduction Of Uncontrolled Emissions (3)	Predicted Emissions (10^6 tons/yr) (1)	Percent Reduction Of Uncontrolled Emissions (2)
Case I - Uncontrolled Old fixed roof tanks & splash loading	1.37	-	0.80	42
Case II New fixed roof tanks & splash loading	1.34	2	0.77	44
Case III Old fixed roof tanks & submerged loading	0.95	31	0.76	45
Case IV New fixed roof tanks & submerged loading	0.92	33	0.73	47
Case V Old floating roof tanks & splash loading	0.73	47	0.16	88
Case VI New floating roof tanks & splash loading	0.67	51	0.10	93
Case VII Old floating roof tanks & submerged loading	0.31	77	0.12	91
Case VIII New floating roof tanks & submerged loading	0.25	82	0.06	96

(1) Emissions assume a 90% efficient vapor recovery unit installed to capture loading emissions.

(2) Based on emissions calculated by assumption (1).

(3) Percent reduction is referred to predicted emissions for Case I, without a vapor recovery unit.

6.4.1.2 Bulk Stations

Emission Sources

Hydrocarbon emissions from bulk plants are also generated from storage tanks and from tank truck loading operations. Because storage tanks typically found at bulk plants are relatively small, the use of floating roof tanks is not common. In many cases horizontal tanks which cannot be fitted with floating roofs are used, and in others the tanks are not large enough to be subject to regulations. Therefore, only fixed roof tanks will be considered in the compilation of emissions from bulk plants.

As in terminal operations, both splash and submerged loading operations are used in bulk stations. Loading losses were estimated for each type of operation.

Emission Factors

The same emission factors used to estimate storage and loading losses for terminals are also applicable to bulk station operations.

Predicted Emissions

Hydrocarbon emissions from U.S. bulk stations are predicted using the gasoline throughputs and storage capacities as previously defined (1.1 million barrels per day throughput with storage capacity of 24 million barrels).

The worst hypothetical case (total uncontrolled hydrocarbon emissions) for U.S. bulk stations results in calculated emissions of 220 thousand tons/year of hydrocarbons. This case constitutes one for which all terminals employ old fixed roof tanks and splash filling operations. The best control case, assuming no recovery of displaced vapors, results in expected hydrocarbon emissions of 145 thousand tons/year. This case represents a situation in which all bulk stations employ new fixed roof tanks and submerged filling operations.

Further control of hydrocarbon emissions from bulk stations may be accomplished with the installation of a vapor recovery system. It is likely that any vapor recovery system designed for a bulk station will be designed to recovery emissions from both storage and loading operations as there are generally no existing controls on these storage operations. It is also feasible that a properly designed, simple displacement system will provide effective control of hydrocarbon emissions from bulk stations. Hydrocarbon emissions controls, other than through the use of submerged filling, are generally not practiced in U.S. bulk stations today.

Table 6.4-3 presents a summary of expected emissions for the different cases of tankage and loading operations of U.S. bulk stations.

6.4.1.3 Service Stations

Emission Sources

Emissions of hydrocarbons at service stations come from loading losses from underground tanks, refueling losses from vehicle tanks, and breathing losses from the underground tank vent.

TABLE 6.4-3

PREDICTED HYDROCARBON EMISSIONS FROM U.S. BULK STATIONS

Bulk Station Operating Conditions	Predicted Emissions (10^3 tons/yr)	Percent Reduction Of Uncontrolled Emissions (3)	Predicted Emissions (10^3 tons/yr) (1)	Percent Reduction Of Uncontrolled Emissions (2)
Case I - Uncontrolled Old fixed roof tanks splash loading	220	-	22.0	90
Case II New fixed roof tanks splash loading	213	3	21.3	90
Case III Old fixed roof tanks submerged loading	152	31	15.2	93
Case IV New fixed roof tanks submerged loading	145	34	14.5	93

(1) Calculations assume a vapor recovery system which controls 90% of all emissions.

(2) Based on emissions calculated by assumption (1).

(3) Percent reduction is referred to predicted emissions for Case I without a vapor recovery unit.

Losses consist of: (1) displaced vapors from the underground tank that occur during refilling, (2) vapors displaced from vehicle tanks during refueling, and (3) underground tank breathing resulting from changes in vapor and liquid temperature.

Emission Factors

Emission factors developed for service stations are as follows (EN-071):

(1) Underground Tank Filling:
Splash Filling: 11.5 lb/1000 gal transferred
Submerged Filling: 7.3 lb/1000 gal transferred

(2) Vehicle Refueling: 11 lb/1000 gal dispensed

(3) Underground Tank Breathing: 1 lb/1000 gal throughput

Predicted Emissions

The following hydrocarbon emissions from U.S. service stations are predicted using the gasoline throughput of 6.07 million barrels per day as defined in Figure 6.4-1.

Underground tank filling operations represent the only variable in predicting service station emissions. Maximum emissions of 1.09 million tons/year would be expected for service stations employing splash filling operations while emissions of 0.90 million tons/year would be expected for service stations using submerged filling operations.

Further controls of service station emissions are practiced in some areas of the U.S. today. Hydrocarbon emission controls on underground tank fillings have been consistently measured to reduce those emissions by 95%. The installation of a vapor recovery system can be used to reduce vehicle refueling emissions up to 90% and virtually eliminate underground tank breathing losses.

Vapor recovery systems in use today are of two basic types: vacuum assist and vapor balance. Vehicle refueling emission reductions are estimated to be 80% for a vapor balance system and 90% for a vacuum assist system. Both of these efficiencies are based on applying 1974 technology. A detailed discussion of emission control technology is presented in section 6.5 of this report. Table 6.4-4 presents a summary of predicted hydrocarbon emissions from U.S. service stations which indicates the relative effects of applying different hydrocarbon emission controls.

6.4.1.4 Aviation Gasoline Hydrocarbon Emissions

Hydrocarbon emissions from aviation gasoline will be much lower than from motor gasoline due primarily to the relatively small quantity of aviation gasoline consumed in the U.S. Emissions from aviation gasoline will be localized and found predominately around airports.

Emissions from storage tanks for this source were predicted by applying the storage loss emission factors for motor gasoline to the assumed storage capacity of aviation gasoline. It was reported in 1972 by the MSA Research Corporation (MS-001) that there were 19.8 million barrels of storage capacity across the United States for aviation gasoline. This figure was used as the basis of calculation.

TABLE 6.4-4

PREDICTED HYDROCARBON EMISSIONS FROM U.S. SERVICE STATIONS

	Predicted Emissions (10^6 tons/yr)	Percent Reduction of Uncontrolled Emissions
Case I - No Control		
· Splash filling of underground tank · No vehicle refueling controls	1.09	-
Case II		
· Submerged filling of underground tank · No vehicle refueling controls	0.90	17
Case III		
· Underground tank emission controls(1) · No vehicle refueling controls	0.53	51
Case IV		
· Underground tank emission controls(1) · Vapor balance vehicle refueling control(2)	0.12	89
Case V		
· Underground tank emission controls(1) · Vacuum assist vehicle refueling control(3)	0.07	94

(1) Underground tank controls (Stage I controls) are assumed to be installed in conjunction with submerged filling operations only. Control efficiency is assumed to be 95% of the submerged filling losses.

(2) Vapor balance control of vehicle refueling emissions is assumed to provide control of 80% of those losses.

(3) Vacuum assist control of vehicle refueling emissions is assumed to provide control of 90% of those losses. This further assumes, of course, that the control unit is operating properly.

Loading losses for aviation gasoline handling were estimated by multiplying the loading losses previously predicted for motor gasoline by the ratio of average daily throughputs of aviation to motor gasolines. Table 6.4-5 presents a summary of the predicted aviation gasoline hydrocarbon emissions.

6.4.2 Adverse Effects of Hydrocarbon Emissions

Very few hydrocarbons in the atmosphere exist in concentrations that directly affect the environment; however, many hydrocarbons termed "reactive" participate to various degrees in photochemical reactions to form photochemical oxidants which do have adverse effects on plants, animals, and materials. The hydrocarbons contained in gasoline vapor are reported to be composed of 42% to 65% reactive hydrocarbons (MS-001, TR-042). Presented here are some of the direct and indirect effects produced by hydrocarbons such as those found in gasoline vapor.

6.4.2.1 Effects on Human Health

Effects on human health are of paramount importance in any consideration of air pollutants. However, the wide variety of compounds in photochemical smog effectively prevent singling out specific compounds as contributors to specific adverse effects. There is little conclusive evidence that hydrocarbons as emitted to the air in existing levels have direct adverse effects on the health of the general public. The documented health effects are limited to eye, respiratory irritation, and aggravation of chronic respiratory ailments due to exposure to photochemical oxidants which are the result of subjecting hydrocarbons to the photochemical reaction.

TABLE 6.4-5

PREDICTED HYDROCARBON EMISSIONS FROM AVIATION GASOLINE

Conditions of Handling	Predicted Emissions (10^3 tons/yr)	Percent Reduction Of Uncontrolled Emissions
Case I - Uncontrolled		
Old fixed roof tanks Splash loading	45.4	-
Case II		
New fixed roof tanks Splash loading	40.8	10
Case III		
Old fixed roof tanks Submerged loading	42.5	6
Case IV		
New fixed roof tanks Submerged loading	37.9	16
Case V		
Old floating roof tanks Splash loading	17.7	61
Case VI		
New floating roof tanks Splash loading	9.3	80
Case VII		
Old floating roof tanks Submerged loading	14.8	67
Case VIII		
New floating roof tanks Submerged loading	6.4	86

The major contributors to eye and respiratory irritation are aldehydes, organic peroxides, peroxynitrates, and ozone. Peroxyacetylnitrate (PAN) was found to induce increased oxygen uptake under stressful exercise. Studies in Los Angeles have found that prolonged exposure of guinea pigs to ambient Los Angeles air increased pulmonary airflow rates. There is also wide spread concern over the potentially carcinogenic effects of long term human exposure to the airborne polycyclic aromatic hydrocarbons.

In summer, although ambient hydrocarbons do not directly effect human health, their derivaties from the photochemical reaction, in atmospheric concentrations, cause eye and respiratory irritation, and aggravation of chronic respiratory ailments (TR-042).

6.4.2.2 Effects on Vegetation

Of the primary hydrocarbon air pollutants, ethylene is the only one producing significant damage at atmospheric concentrations. Oxidants resulting from the photochemical reaction produce the greatest amount of vegetation damage. This damage is primarily in the form of growth supression. It is difficult to assess vegetation damage due to air pollution but estimates of pollution vegetation damage in California were $100 million annually and for the nation $500 million annually (TR-042).

6.4.2.3 Materials Damage

Materials damage by atmospheric hydrocarbons and their oxidant derivatives is not well documented. Photochemical oxidants cause cracking and loss of elasticity in rubber and plastics, the formation of resistive coatings on electrical contacts, and discoloration and deterioration of architectural coatings. The San Francisco Bay Area estimated their materials damage due to hydrocarbons and photochemical oxidants to be $15 million annually (TR-042).

6.4.2.4 Other Effects

In addition to effects on health, vegetation, and materials, hydrocarbon and photochemical oxidant pollutants can be visually offensive and contribute to offensive odors. Offensive odors are a nuisance and can result in property depreciation and degradation of the general quality of life.

6.4.3 Seasonal Characteristics of Emissions

The ambient level of photochemical oxidants is lowest in the winter season. This coincides with the season when the efficiency of the vapor balance recovery system is the lowest. Photochemical reaction rates are lowest during the winter months when solar radiation is at a minimum and the ambient temperatures are low. Figures 6.4-2 and 6.4-3 present the frequency that ambient standards were surpassed at several sampling locations (EN-182).

At all sampling locations the ambient photochemical oxidant standard was not surpassed in the months of January and December, and for several of the sampling locations the

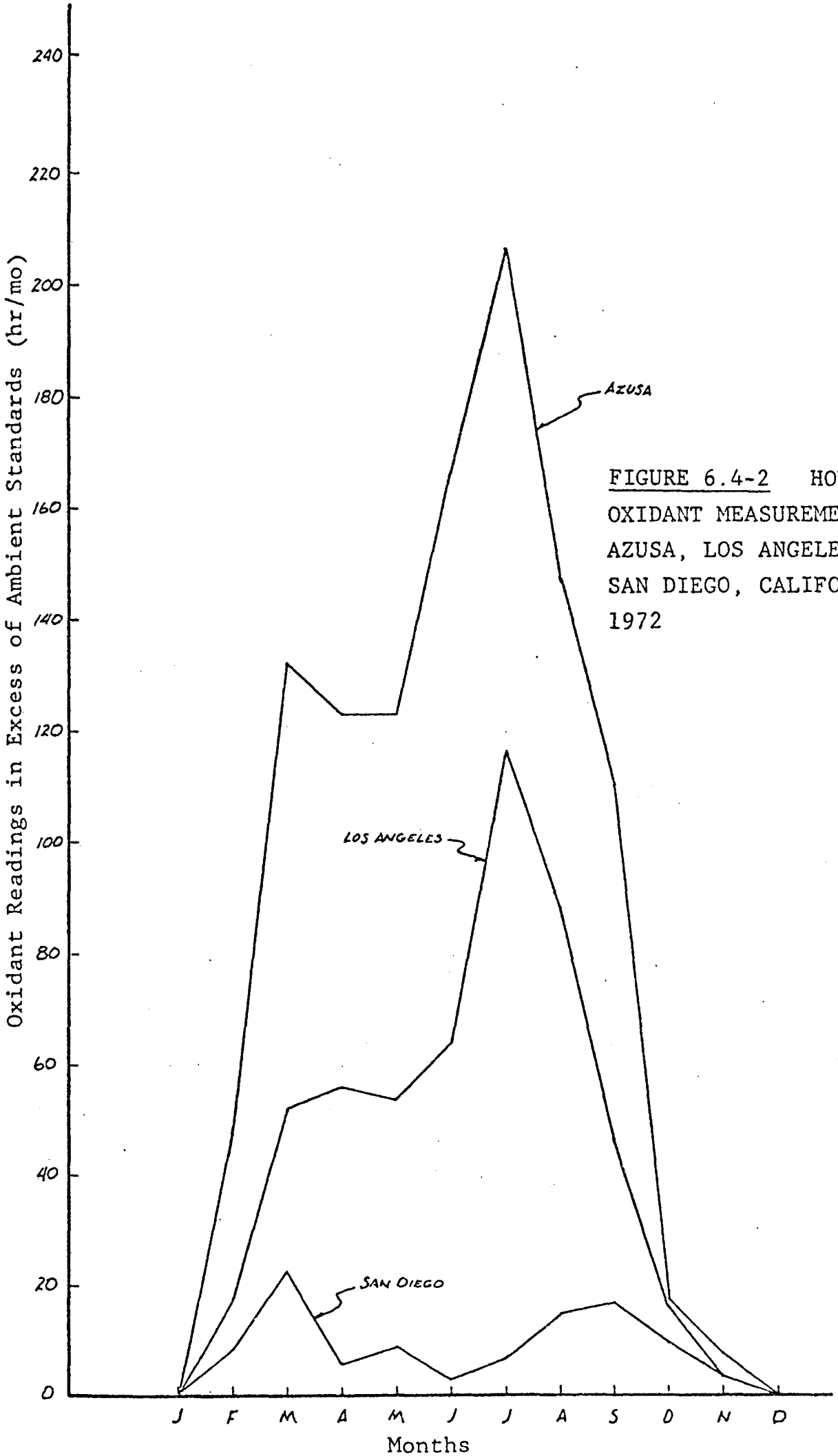

FIGURE 6.4-2 HOURLY OXIDANT MEASUREMENTS, AZUSA, LOS ANGELES, AND SAN DIEGO, CALIFORNIA - 1972

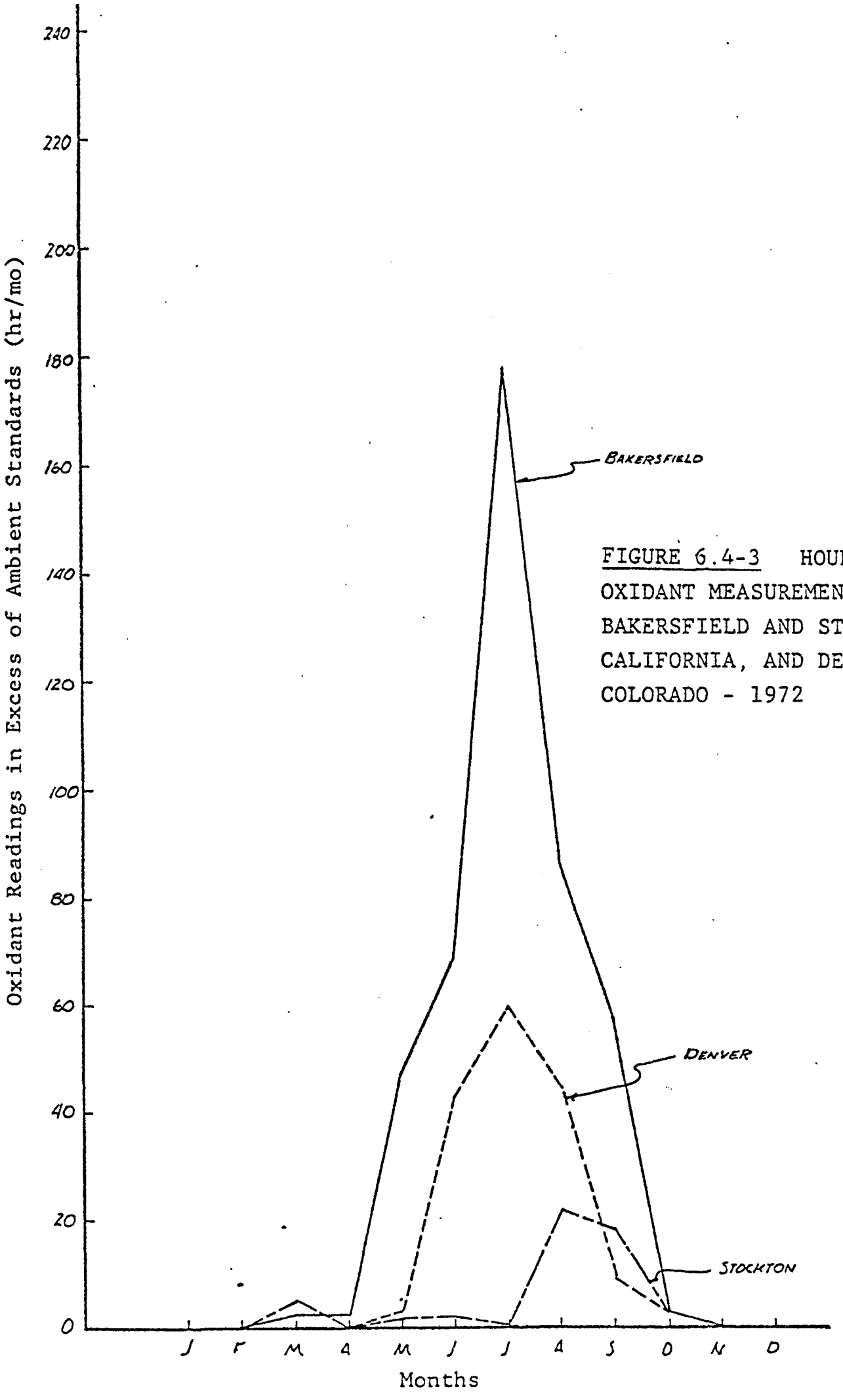

FIGURE 6.4-3 HOURLY OXIDANT MEASUREMENTS, BAKERSFIELD AND STOCKTON, CALIFORNIA, AND DENVER, COLORADO - 1972

standard was not surpassed in the months of January, February, November and December. During these months the average temperatures were in the low 50's or lower.

Photochemical oxidant production is greatest in the warm summer season when ultraviolet radiation is at its peak. Figures 6.4-2 and 6.4-3 reflect this trend, indicating June, July, and August to be the months when this problem is most acute.

6.5 Emission Control Technology

6.5.1 Bulk Terminals

The emission control technology designed for bulk terminals is the most highly developed and has been in use for some time. Certain regions have for many years had regulations requiring emission controls and have thus encouraged the development of bulk terminal emission control technology. The petroleum industry has also viewed terminal emission control technology as an economical means of conservating valuable fuel products. This section provides brief descriptions of the control measures available for bulk terminal emissions.

6.5.1.1 Storage Tank Controls

Gasoline storage tanks at bulk terminals are generally of the size which are regulated for hydrocarbon vapor emissions. Most terminals, therefore, have some type of hydrocarbon emission controls on their storage tanks. Emission control technology applicable to storage tank hydrocarbon emissions is discussed in Section 5.3.2 of this report.

6.5.1.2 Loading Rack Vapor Controls

A second source of emissions from bulk terminals occurs at the tank truck loading rack. As the truck is loaded, gasoline vapors in the tank, unless contained, are displaced to the atmosphere. The quantity of hydrocarbons in these emissions is dependent on the previous drop made by the truck, the method of gasoline loading, and climatic conditions. Loading rack vapor control equipment attempts to capture these emissions from the truck and transfer them to a vapor recovery unit.

Description

The type of vapor collection system at the truck rack depends on how the truck is loaded. If the truck is top loaded, vapors are recovered through a top loading arm (Figure 6.5-1). Top loading arms consist of a splash or submerged loading nozzle (Figure 6.5-2) fitted with a head which seals tightly against the hatch opening. Gasoline is loaded through a central channel in the nozzle. Displaced vapors flow into an annular vapor space surrounding the central channel and in turn flow into a hose leading to a vapor recovery system. Since the vapor line is incapable of handling liquid overflows a safety shut-off is usually included in the nozzle. Some of the advantages of top loading vapor collection are:

- minimal modifications required for existing top loading trucks
- inexpensive conversion of existing top loading racks for vapor recovery
- adaptability to existing top loading independent carriers.

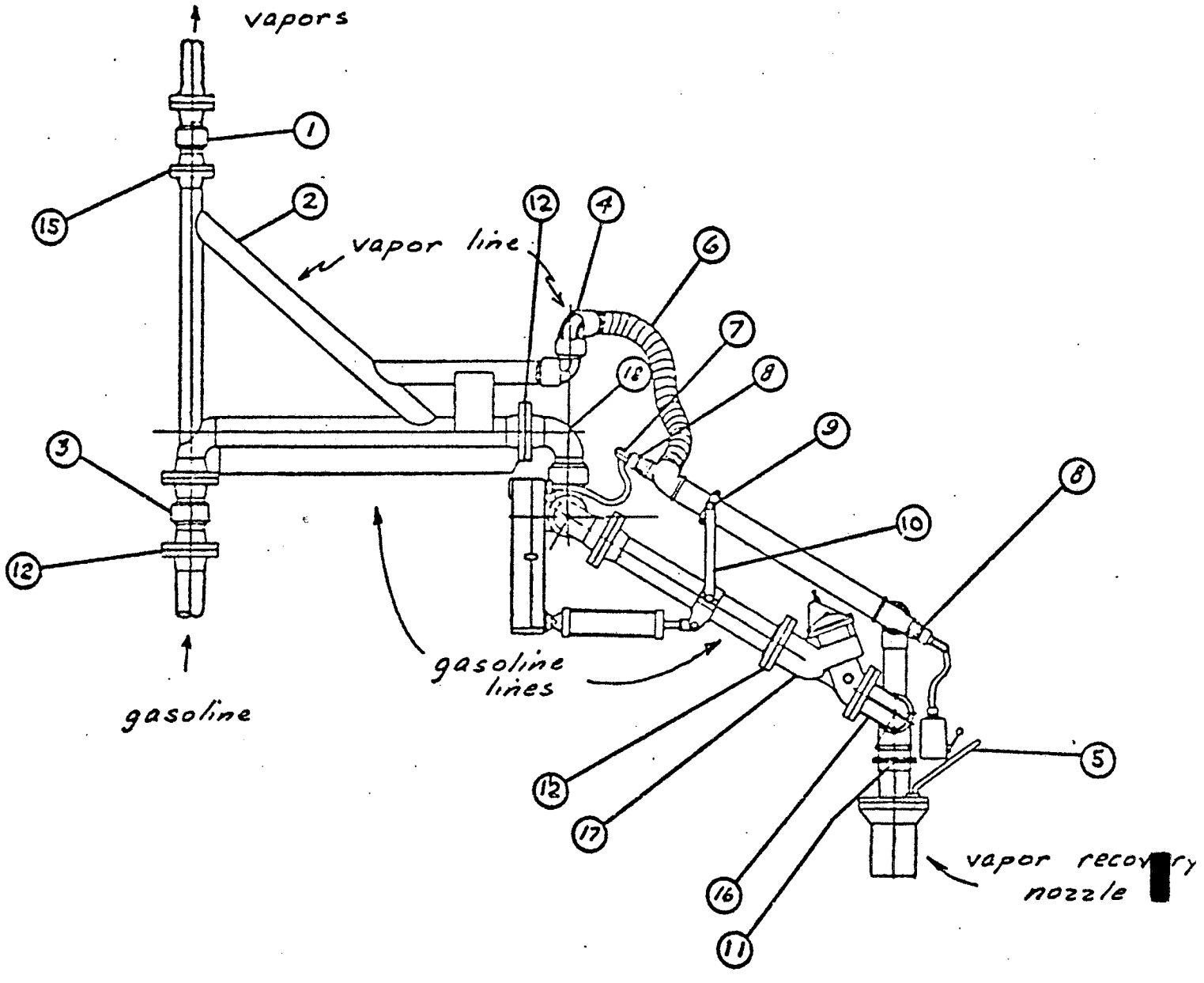

MISCELLANEOUS PARTS

ITEM	PART NO.	DESCRIPTION	QTY.
1	3420-F-30	Swivel Joint, 3"	1
2	2775 *	Boom	1
3	3420-F-40	Swivel Joint, 4"	1
4	H-5936	Swivel Joint 3"	1
5	D-837-M	Handle	1
6	H-5898-RP	Hose	1
7	H-5906-M	Elbow	1
8	H-5905-M	Cord Grip	2
9	H-5818-	Collar Sub-Assembly	2
10	C-1667-A	Link	2
11	C-2479-M	Gasket	1

ITEM	PART NO.	DESCRIPTION	QTY.
12	H-4190-M	Gasket, 4"	6
13	D-836-M	Upper Handle & Pipe	1
14	3630-30	Swivel Joint, 3"	1
15	H-4189-M	Gasket, 3"	1
16	H-5952	Swivel Joint Sub-Assembly, 4"	
	3840-FO-40	Swivel Joint Only	1
	710	4 x 2 7/8 Nipple Only	1
	C-555-A	4" Flange Only	1
17	417-FKA-4"	Loading Valve	1
18	3476-F-40	Swivel Joint, 4"	1

FIGURE 6.5-1

Top Loading Arm Equipped With A Vapor Recovery Nozzle

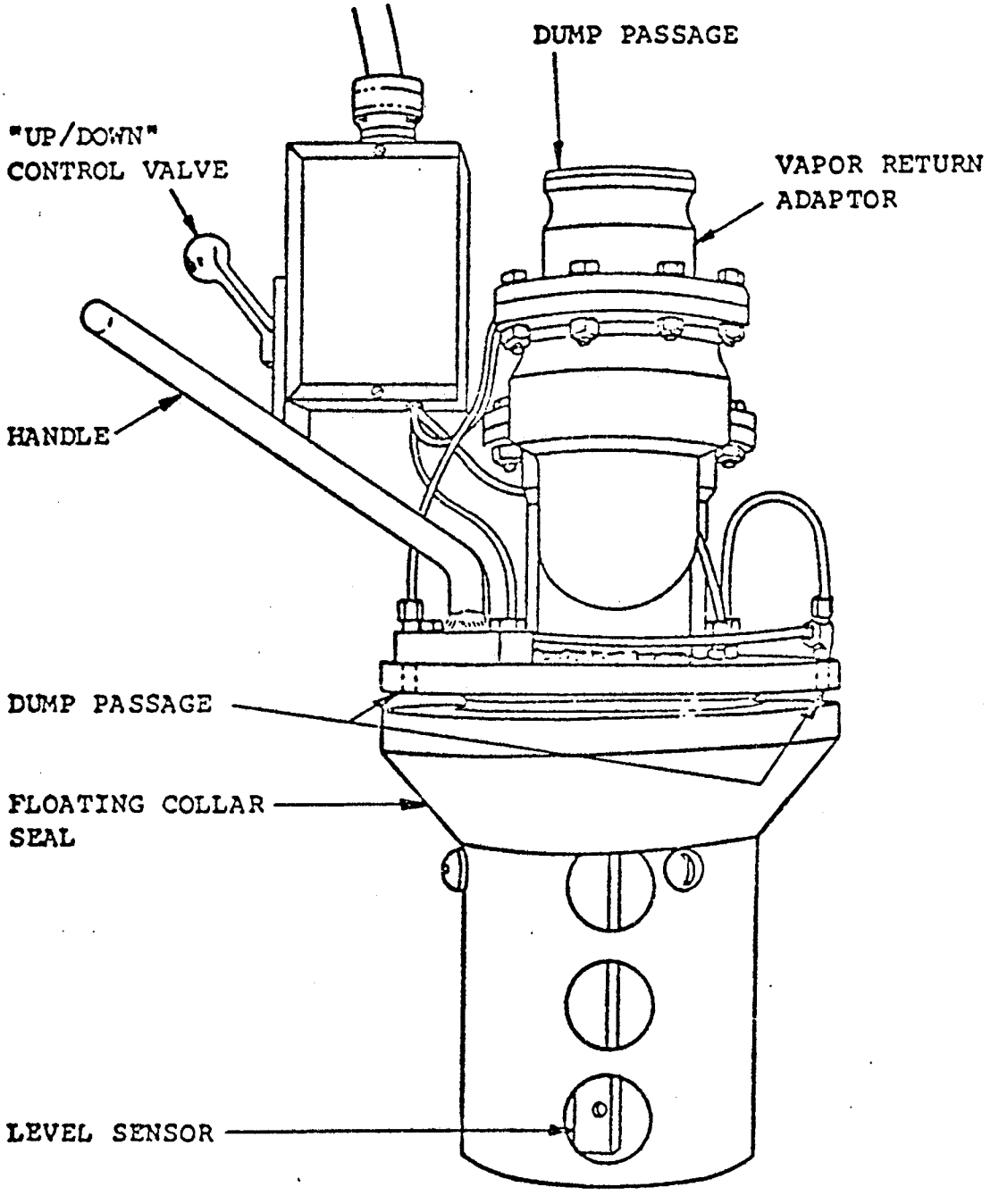

FIGURE 6.5-2

Detail of a Vapor Recovery Nozzle

If the truck is bottom loaded the equipment needed to recover the vapor is considerably less complicated. Vapor and liquid lines are independent of each other with resultant simplification of design. Figure 6.5-3 shows a typical installation. The vents on top of the trucks are manifolded together and a single vapor vent line is brought from the truck near the bottom loading fueling connections. One or both of the truck turnover rails are usually used as the vapor manifold. Vapor collection and gasoline dispensing lines are flexible hoses and/or swing type arms connected to quick acting couplings on the truck.

Bottom loading vapor recovery has many advantages over top loading vapor recovery. The operator does not have to walk on top of the truck. Bottom loading generates much less vapor, generates almost no mist, and is safer from a static electricity point of view. Because of the capacity to simultaneous load several compartments, bottom loading allows faster loading. In addition, a truck equipped to pick up vapors at the service station is equipped for bottom loading.

Efficiencies

Although difficult to quantify, the vapor collection efficiency for top loading is lower than for bottom loading. Vapors escape from the hatch opening during insertion and removal of the top loading nozzle. There are also losses due to spills as the loading arm is raised from the truck.

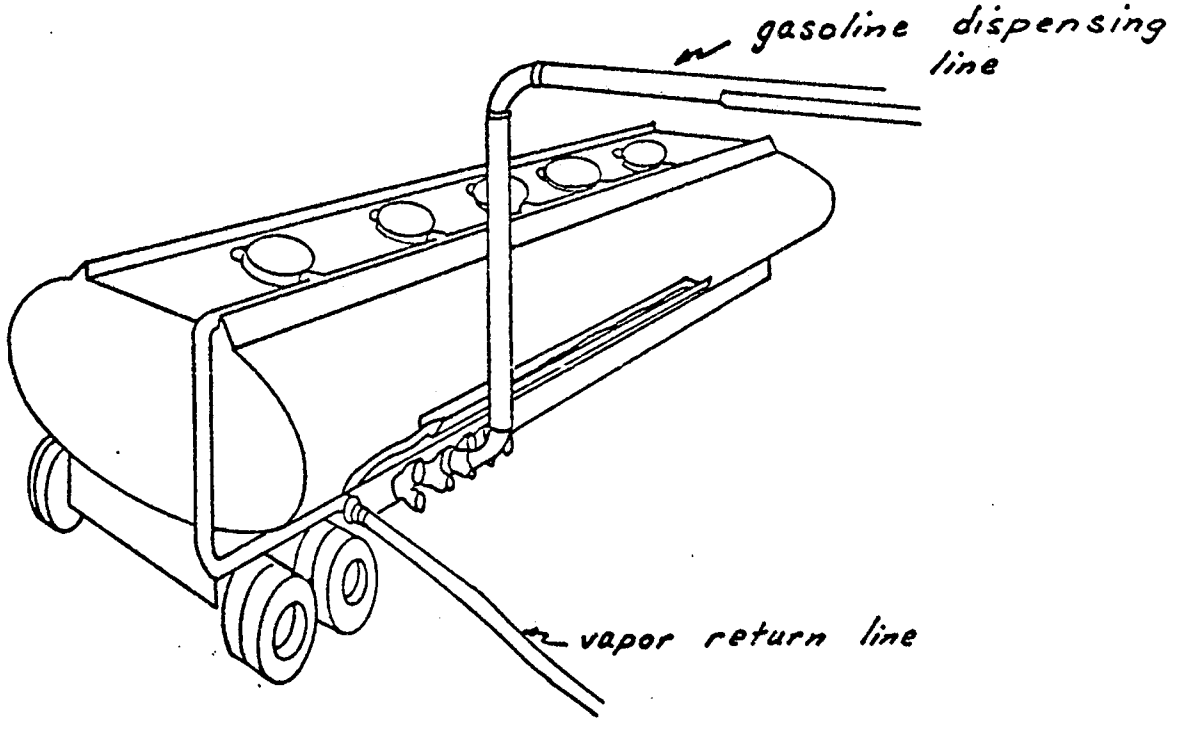

FIGURE 6.5-3
Bottom Loading Vapor Recovery

The vapor containment efficiency of bottom loading equipment approaches 100 percent on a tightly sealed truck. When properly operating, the system remains sealed throughout the loading operation. Dry break couplings are used on the gasoline dispensing lines and check valves are used on the vapor return lines to minimize spills and vapor escape during hook-ups and disconnects.

6.5.1.3 Vapor Recovery Units

Vapor recovery units are manifolded into the vapor collection system at bulk terminals for either conversion of the gasoline vapors into liquid product or for disposal of the vapors through such processes as combustion or adsorption. There are several vapor recovery units which are commercially available today that have demonstrated high efficiencies in recovering hydrocarbon vapors from operating bulk terminals.

The main processing operations employed by vapor recovery systems are compression, refrigeration, absorption, adsorption, and oxidation. A vapor recovery system may use one or several of these operations to achieve effective hydrocarbon control.

Vapor recovery units are generally classified as to their principle of operation. The most widely used vapor recovery units today, are of the following types:

(1) Compression-Refrigeration-Absorption (CRA)

(2) Compression-Refrigeration-Condensation (CRC)

(3) Refrigeration

(4) Lean Oil Absorption

(5) Flame Oxidation

Each of these systems will be discussed in this section.

All of the above systems are capable of achieving 90% reduction of hydrocarbon emissions. These systems are rather complex, however, and thus a proper maintenance schedule must be maintained to assure of proper operations. Reliability has generally been reported as good when proper maintenance has been performed. Figure 6.5-4 is a schematic of a vapor recovery unit which depicts some of the complex equipment associated with these systems.

Compression-Refrigeration-Absorption (CRA) Systems

The compression-refrigeration-absorption vapor recovery system (CRA) is based on the absorption of gasoline vapors under pressure with chilled gasoline from storage. The primary unit in CRA systems is the absorber with the remaining components serving to condition the vapor and liquid entering the absorber, improve absorber efficiency, reduce thermal losses, and/or improve system safety. Incoming vapors are first passed through a saturator where they are saturated with fuel. The saturated vapors are then compressed and cooled prior to entering the absorber. In the absorber the cooled, compressed vapors are contacted by chilled gasoline drawn from product storage and are absorbed. Hydrocarbon-free air is vented from the top of the absorber and gasoline enriched with light ends is withdrawn from the bottom of the absorber and returned to the fuel storage tanks. The operating conditions in the absorber vary with the manufacturer, and range from -10°F to ambient temperature and from 45 psig to 210 psig.

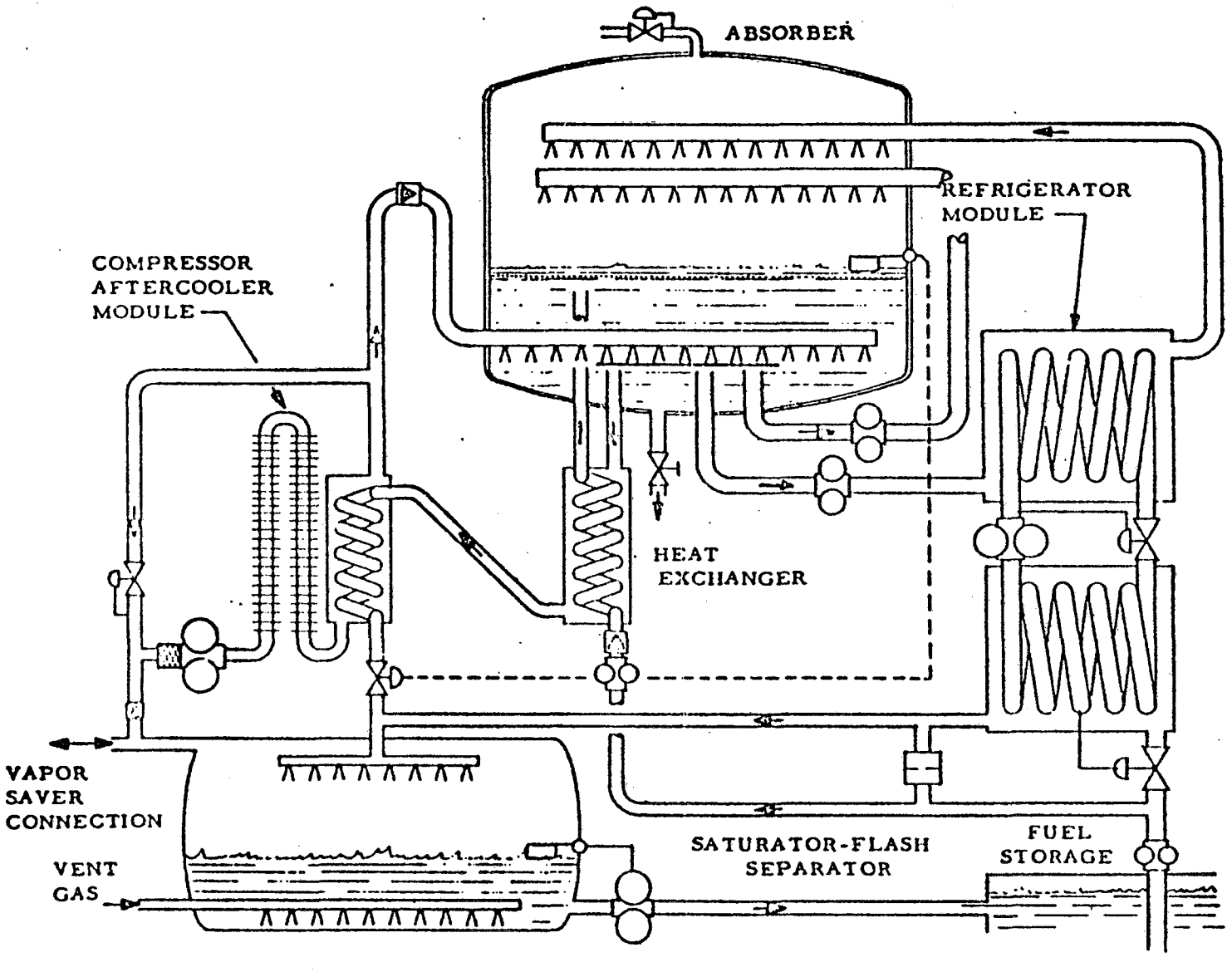

FIGURE 6.5-4

Schematic of a Terminal Vapor Recovery Unit

Compression-Refrigeration-Condensation (CRC) Systems

Compression-Refrigeration-Condensation vapor recovery systems (CRC) were the first type utilized by the petroleum industry. They are based on the condensation of hydrocarbon vapors by compression and refrigeration. Incoming vapors are first contacted with recovered product in a saturator, and are saturated beyond the flamability range. The saturated vapors are then compressed in a two stage compressor with an inter-cooler. Condensate is withdrawn from the inter-cooler prior to second stage compression. The compressed vapors are passed through a condenser where they are cooled, condensed, and returned along with condensate from the inter-cooler to the gasoline storage tank. Essentially hydrocarbon-free air is vented from the top of the condenser. Operating conditions vary with the manufacturer, with temperatures ranging from -10°F to 30°F and pressures ranging from 85 psig to 410 psig.

Refrigeration Systems

One of the most recently developed vapor recovery systems is the straight refrigeration system, based on the condensation of gasoline vapors by refrigeration at atmospheric pressure. Vapors displaced from the terminal enter a horizontal fin-tube condenser where they are cooled to -100°F and condensed. Because vapors are treated on demand no vapor holder is required. Condensate is withdrawn from the condenser bottom and hydrocarbon-free air is vented from the condenser top. Cooling for the condenser coils is supplied by a methyl chloride brine solution circulated from a cold brine storage reservoir. A two-stage refrigeration unit is used to refrigerate the stored brine solution to between -105°F and -125°F.

Lean Oil Absorption Systems

The lean oil absorption (LOA) vapor recovery system is based on the absorption of gasoline vapors into lean gasoline stripped of light ends. Gasoline vapors from the terminal are displaced through a packed absorber column where they are absorbed by cascading lean gasoline (termed sponge oil or lean oil) at atmospheric temperature and pressure. Stripped air is vented from the top of the absorber column. The enriched gasoline is returned to storage. Lean gasoline for the absorber is generated by heating gasoline from the storage tanks and evaporating off the light ends. The separated light ends are compressed, condensed, and returned to storage, and the lean gasoline is stored separately for use in the absorption column.

Flame Oxidation Systems

One of the simplest vapor control systems for bulk terminals is the flame oxidation system. This system controls hydrocarbon emissions by combusting gasoline vapors as opposed to recovering them as a liquid product. Gasoline vapors from the terminal are displaced to a vapor holder as they are generated. A hydrocarbon analyzer system adds propane to the vapor holder when necessary to maintain the hydrocarbon/air ratio above its flamability limit. When the vapor holder reaches its capacity the gasoline vapors are released to the oxidizer, after mixing with a properly metered air stream and combusted to carbon dioxide and water.

6.5.2 Service Stations

The main sources of hydrocarbon emissions from service stations are the underground tank refilling and vehicle refueling operations. Considerable experience has recently been obtained

with emission controls for both sources. Emission control of underground tank filling operations has been designated as Stage I controls and control of vehicle refueling operations has been designated as Stage II controls. Emission control technology, for both stages of control will be discussed in this section.

6.5.2.1 Stage I Control Technology

Emissions resulting from underground tank filling vary with the method of tank loading operations, i.e., splash or submerged loading. Underground storage tanks should be equipped with submerged fill pipes that extend to within six inches of the bottom of the underground tank to provide minimum emissions.

Substantial test data exists which indicate that 95% of the displaced vapors can be recovered by simply returning the displaced vapors to the tank truck. These data indicate that a well-designed vapor balance or displacement system will provide efficient control of underground tank refilling vapors with the use of emission control technology and equipment commercially available today.

A well designed vapor balance system used to control emissions from refilling underground tanks should employ the following equipment:

(1) A fill pipe which extends to within 6" of the bottom of the underground tank

(2) Vapor return hoses and connector of 3" or greater nominal size

(3) The storage tank vent to atmosphere should be equipped with either an orifice of 1/2-3/4 inch inside diameter or a pressure-vacuum vent valve

Figure 6.5-5 is a schematic sketch of a well designed vapor displacement system for recovery of underground storage tank vapors. The system depicted employs a concentric or coaxial vapor-liquid connector.

6.5.2.2 Stage II Control Technology

Stage II controls refer to control during vehicle refueling. It is in this area where much disagreement remains on the effectiveness of different means of emission control. Most of the controversy centers on the relative advantages/disadvantages of two basic types of emission control systems: vapor displacement and vacuum assist.

Considerations-Vapor Balance Systems

The vapor displacement, or vapor balance, system operates by simply transferring vapors to the underground tank where they are stored until final transfer to a tank truck. Pressure created in the vehicle tank and vacuum created in the underground tank are the principal agents of vapor transfer. The main pieces of equipment associated with a vapor balance system are a specially designed nozzle which is designed to form a vapor tight seal at the fill neck interface, a flexible hose, and an underground piping system to transport the vapors to the underground storage

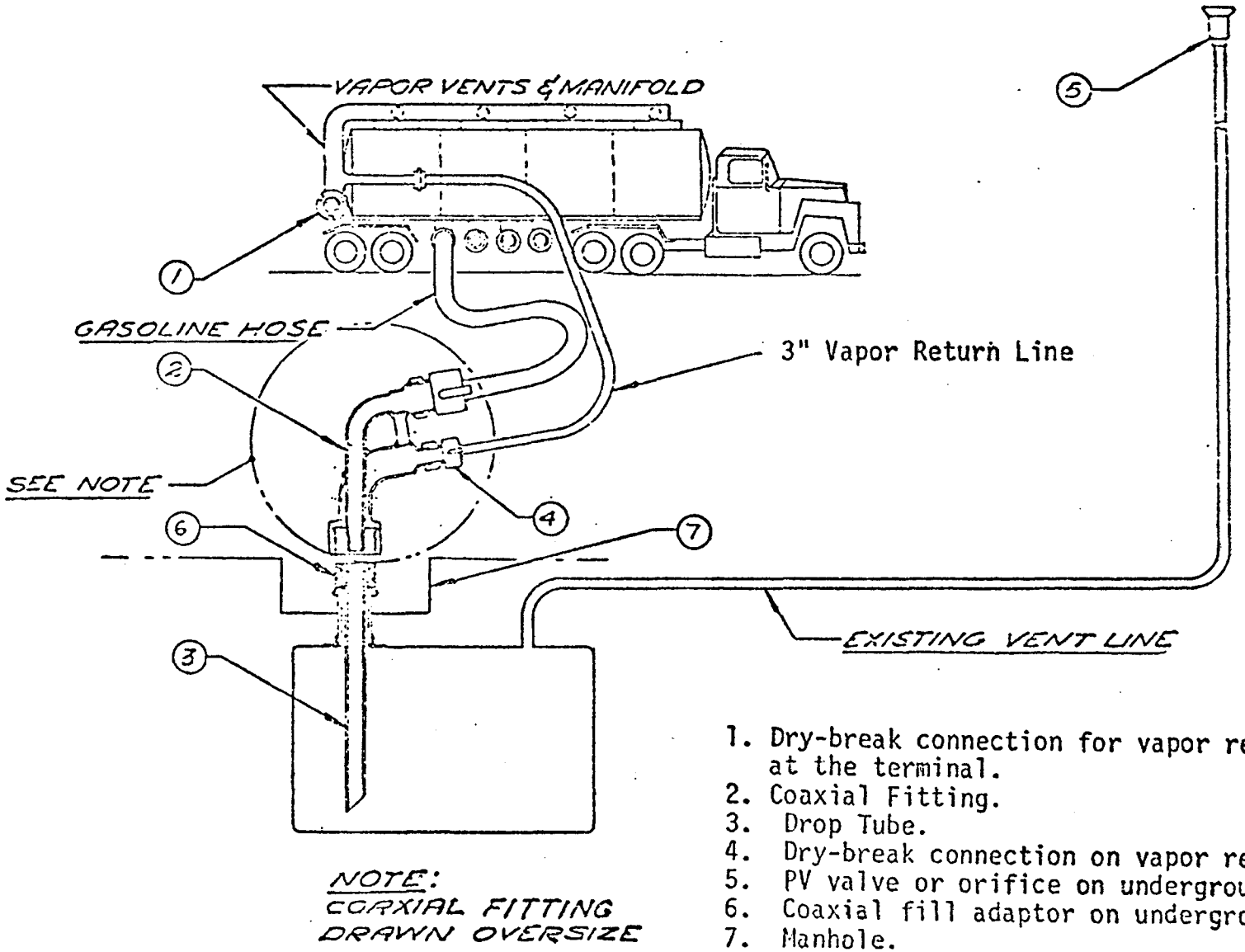

1. Dry-break connection for vapor return connection at the terminal.
2. Coaxial Fitting.
3. Drop Tube.
4. Dry-break connection on vapor return line.
5. PV valve or orifice on underground tank vent.
6. Coaxial fill adaptor on underground tank 4" riser
7. Manhole.

FIGURE 6.5-5

Stage I Vapor Recovery Equipment

tank. The underground storage tank vent line can either be open to the atmosphere or equipped with a P-V value to aid in retaining a vacuum in the underground tank.

Source testing of vapor balance systems conducted by EPA and several major oil companies has indicated that these systems are capable of recovering between 80-90% of the hydrocarbon emissions resulting from vehicle refueling operations. The majority of uncollected hydrocarbon losses result from leaks at the nozzle-fill neck interface. If the problem of leakage around this interface can be solved, the vapor balance system will then become a highly efficient and extremely reliable method of recovering vehicle refueling vapors.

There are a multitude of vehicle fill neck configurations and sizes found in vehicles on the road today. It is highly unlikely, therefore, that a single nozzle will be developed to provide leak free seals on all vehicles. One means of ensuring a tight seal could, however, be through development of fill neck adapters which have been standardized for fill necks on all vehicles. Agreement of automobile manufacturers to supply standardized fill necks with all cars would, of course, greatly simplify implementation of this plan.

Due to its simplicity, costs for a balance system will be relatively low and operating reliability will be high. Costs are expected to be about $5,000 for installation in an existing service station and $2,500 for installation in a new station.

Considerations-Vacuum Assist Systems

Designs of commercially available vacuum assist systems vary widely. All do, however, employ a blower or vaccum pump and a secondary recovery device. The vacuum pump

creates a negative pressure in the vehicle fill neck which "pulls" hydrocarbon vapors either directly to the secondary unit or to the underground tank with the excess vapors going to a secondary unit. The amount of vapor collected by this type system is greater than the amount that would be displaced by the balance system filling operations.

The main processing operations employed by secondary control devices are compression, refrigeration, adsorption, condensation, and oxidation. One secondary control device may use one or several of these operations to achieve the necessary control. The equipment associated with these type systems is generally complex, expensive, and subject to mechanical failure. Equipment associated with a balance system on the other hand is simple, less expensive, contains no moving parts (except for the nozzle) and is thus not subject to operational downtimes.

Efficiencies of secondary vapor recovery systems are reported to be at least 90%. This efficiency should be achievable if the equipment is well maintained.

Potential problems with these systems result from the use of a vacuum pump to assist the transfer of gasoline vapors from a vehicle tank to an underground storage tank. If there is a high vacuum and a good seal at the nozzle-fill neck interface, vapor "pull-out" will occur and gasoline vapors will be lost which would have ordinarily remained in equilibrium with the gasoline in the vehicle tank. A situation may also exist where there is a high vacuum and a poor seal at the nozzle fill neck interface. In this case, fresh air will be pulled in the leak thus creating a potentially explosive

mixture in the underground piping network. Proper pressure control of these systems is essential.

Due to their complexity, vacuum assist vapor recovery systems will be more costly than the simpler vapor balance systems. Costs for complete installation of these systems have been estimated to be in the $10,000-$15,000 range.

Descriptions of each of these vapor recovery systems will be provided in this section.

System Description-Vapor Balance

The major components of a vapor balance system are a vapor recovery nozzle, a flexible hose, and underground piping. The function of the vapor recovery nozzle is to effect a leak free seal at the fill pipe interface. When the seal is made, all vapors displaced from the vehicle tank will flow through a vapor passage in the nozzle.

The function of the flexible hose is to provide a means of transferring the displaced vapors from the nozzle to the underground pipe. The hose is connected to the outlet of the nozzle vapor passage and to the inlet of the underground pipe which provides a path of vapor flow to the underground tank. Experience with these systems has indicated that a flexible hose size of at least 3/4" and an underground pipe size of at least 2" are necessary to prevent excessive system pressure drops. Furthermore, experience has shown that a slope of 1/8 - 1/4" per foot will provide a sufficient gradient for any condensed vapors to flow to the underground tank. Figure 6.5-6 shows a diagram of a vapor balance system with manifolded vent lines.

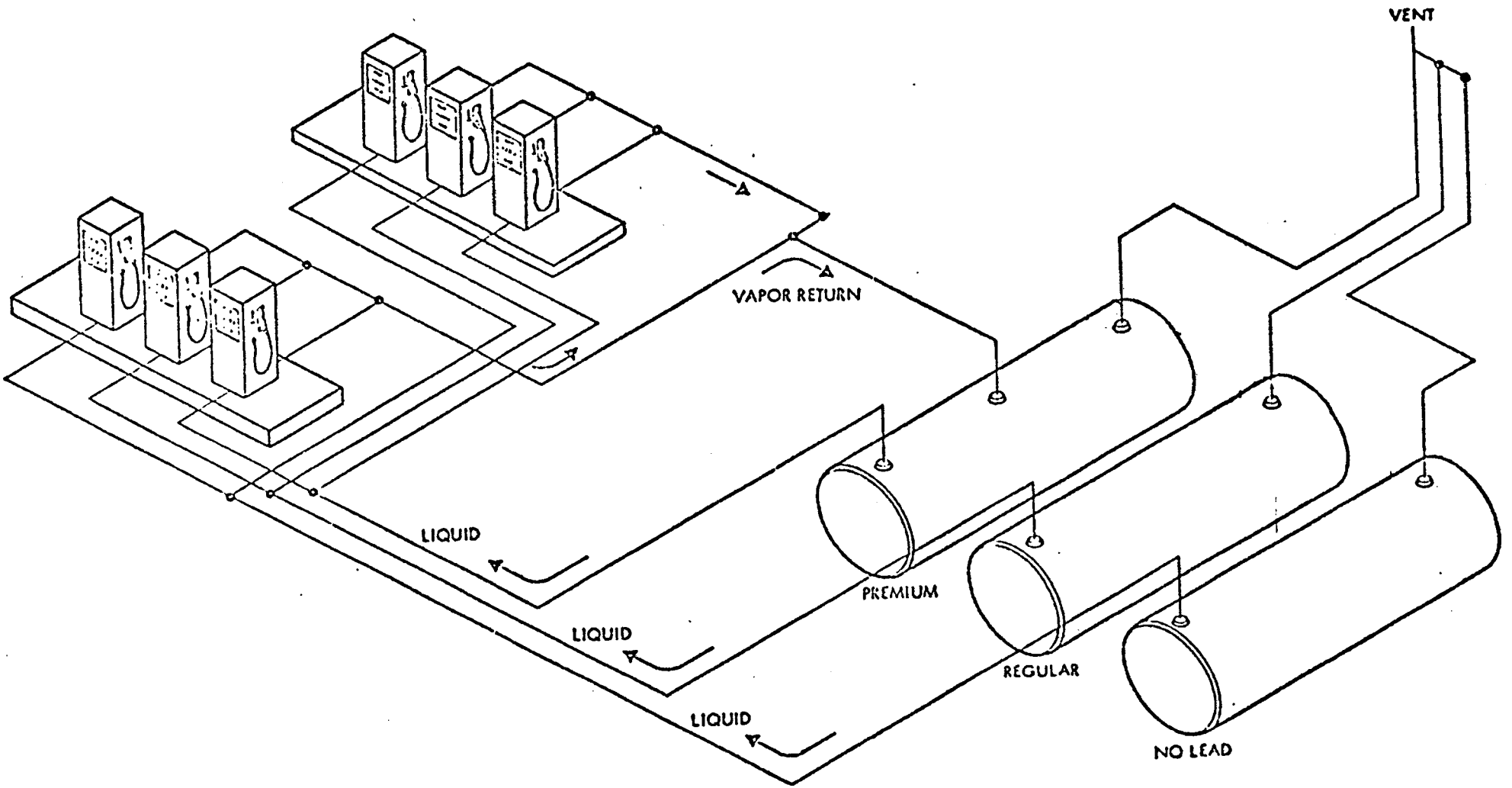

FIGURE 6.5-6
Diagram of a Vapor Balance System

The major differences in vapor balance systems are found in designs of nozzles, piping configurations, and underground tank vent line controls. Some systems return the displaced vapors to individual tanks while others manifold them together. Pressure-vacuum valves can be used to control breathing of the underground tank. In addition, they have the capability of taking advantage of the vacuum developed in the underground tank upon vehicle refueling which aids in providing a driving force for the transport of vapors from the fuel tank to the underground storage tank.

System Descriptions-Vacuum Assist Compression-Refrigeration-Condensation

The major pieces of equipment associated with a compression-refrigeration-condensation (CRC) vapor recovery system are:

- vapor recovery nozzle,
- flexible hose,
- vacuum pumps,
- underground piping system,
- vapor holder,
- two stage compressor, and
- refrigeration heat exchanger.

One commercially available system operates by pumping the collected vapors through a bed of liquid contained within a surge tank where the vapors become saturated. The purpose of the surge tank is to ensure that the vapors are saturated before they are compressed and to even out large volume surges which may occur during bulk drops. The saturated vapors from the vapor holder, or surge tank, are compressed and cooled in a two-stage, high-pressure refrigeration unit. The condensed gasoline is returned to the underground storage tank and the non-condensed vapors are vented.

A carbon canister can be used in this system in place of the vapor holder and saturator. When the canister is used, all excess vapors pass through it and the hydrocarbons are adsorbed while essentially hydrocarbon free air exists. The carbon is regenerated by heat assisted vacuum stripping and the recovered vapors are condensed in the CRC unit.

Oxidation

There are two types of oxidation systems used to eliminate hydrocarbon emissions. They are defined as catalytic oxidation and thermal oxidation processes. Both employ the same basic equipment: vapor recovery nozzles, vacuum blowers, piping systems, excess vapor holders, and an oxidation unit. Both expandable bladder tanks and carbon canisters have been used for vapor holders.

For regeneration of carbon bed vapor holders, a vacuum blower pulls air through the canister in a reverse direction, purging the adsorbed hydrocarbons. The regeneration gases are then passed to the oxidation units. Both the catalytic and thermal units add air to the hydrocarbon stream in a controlled amount to support combustion. After adsorbed hydrocarbons have been removed, the fuel/air mix passing to the oxidation units becomes leaner. The catalytic unit automatically shuts off when the temperature drops below a certain level (say 1100°F) and the thermal oxidation unit is automatically shut off, when combustion is no longer supported.

Refrigeration-Adsorption

Commercially available refrigeration vapor recovery systems are designed to process the excess vapors from the underground tank. When the system pressure reaches a designated level (say 3" H_2O) the refrigeration unit is activated and vapors are passed across the low temperature cooling coils. This causes some of the excess vapors to be condensed, reducing the volume of uncondensed vapors. Condensed product and contracted vapors are returned to the underground tank.

Under extreme conditions, when large quantities of excess air are suddenly introduced into the system, the system pressure may rise above 3.0" H_2O operating level. When the pressure reaches a maximum of seven inches of water excess vapors are vented through a carbon canister which may be regenerated off-line after the system pressure is lowered to its normal operating level.

Gasoline Engine

Hydrocarbon vapors are collected from the dispensing nozzle by a vacuum blower and discharged into a vapor manifold. The major portion of the collected vapors are returned to the underground tank dispensing the gasoline. Excess vapors are conveyed either to an activated carbon bed or to the carburetor of a one cylinder, four-cycle engine. The engine and blower are automatically started when the gasoline dispenser is activated. Excess vapors generated at rates greater than the engine can consume bypass the engine and are stored on the carbon bed. The engine is connected to a load blower which simply serves as a sink for energy output.

When the nozzle and blower are cut off the engine continues to operate on hydrocarbons purged from the carbon bed by reversed air flow. When the carbon bed is fully regenerated the engine cuts off from lack of fuel. A special carburetor maintains the fuel air ratio constant. The engine is equipped with a catalytic muffler to oxidize any trace quantities of hydrocarbons or carbon monoxide in the exhaust.

Systems Under Development

Several additional recovery units for use in vacuum assist systems are under development. Prototypes of these systems are being tested and commercial units are likely to be in production by 1976. In this section, each of these basic types of systems will be described.

Compression-Absorption-Adsorption

This system operates by compression of hydrocarbon vapors to 22.5 psia and passing them through an absorption column where they are contacted with $0^{o}F$ gasoline. Air and unabsorbed hydrocarbons are subsequently vented through a carbon bed cooled by heat exchange with cold gasoline. The carbon bed is vacuum regenerated, with recycling of the desorbed hydrocarbons through the absorption unit.

Compression-Refrigeration-Condensation

A CRC system under development offers a new recovery technique. It separates and bottles collected propane and butane products. The collected hydrocarbon vapors are first cooled to $60^{o}F$ in an exchanger where pentanes and heavier fractions are condensed and returned to the underground product storage tanks. Uncondensed vapors are next compressed to 125 psig and again cooled to $60^{o}F$ where propanes and butanes are condensed and bottled for sale. The small quantities of methane and ethane remaining in the vapor stream are adsorbed in a carbon bed and purified air is vented from the bed.

Open Refrigeration

This system is in design stage only. Hydrocarbon vapors generated during refueling are vacuum collected and returned to the underground product storage tank through a common vapor manifold. Excess vapors are displaced through a refrigeration-condenser unit

and cooled to -85°F. The hydrocarbon components of the vapor are condensed out and returned to product storage.

Adsorption-Absorption

This system is basically an on-site regeneration carbon adsorption system. Vacuum assist is used to return the collected hydrocarbon vapors to the underground storage tank. Excess vapors are vented through a carbon canister where the hydrocarbon vapors are adsorbed. Regeneration is accomplished by vacuum stripping the off-service carbon canister. The recovered hydrocarbons are returned to the underground storage tank (premium grade) and absorbed into the liquid fuel.

6.5.3 Bulk Stations

Very few studies have been conducted on bulk station emission controls; however, research on service station and terminal control techniques is largely applicable to bulk stations. The two primary emission sources at bulk stations are transfer operations and tankage. Emissions from transfer operations are attributed to vapors displaced during the filling of bulk station storage tanks and the filling of delivery trucks. Tankage emissions are attributed to diurnal breathing losses. The two basic approaches to controlling these emission sources is straight vapor balance and vapor balance in conjunction with vapor recovery systems.

6.5.3.1 Vapor Balance

The control of transfer losses from bulk stations centers mainly around vapor balance and bottom loading.

Converting to bottom loading and reducing transfer rates will tend to reduce the generation of gasoline vapors. In section 6.5.2.1 (Stage I controls) it is reported that vapor balance systems at service stations achieve an average emission reduction efficiency of 95%. The same efficiency should be possible when applying that system to bulk station transfer losses.

Bulk station storage tanks are usually truck portable horizontal or vertical tanks. It is uneconomical to install variable volume vapor storage or floating covers on these tanks to control breathing losses. One economical solution to breathing losses is the installation of pressure-vacuum (p/v) vents on the tanks. Figure 6.5-7 (NI-027) indicates that tankage breathing losses can be virtually eliminated by using a p/v vent with a 40 oz/in^2 (2.5 psig) pressure setting and a reduction of 70% can be achieved by using a p/v vent with a 16 oz/in^2 (1 psig) pressure setting. Since API tankage is already stressed for higher working pressures than these, additional tankage costs would not be incurred.

6.5.3.2 Vapor Recovery Systems

If the efficiency of the balance system proves insufficient, bulk stations can be equipped with vapor recovery systems. The vapor recovery systems would be installed in conjunction with balance system piping to process only the excess vapors which the balance system fails to control. Large bulk stations would employ one of the terminal-size vapor recovery systems outlined in section 6.5.1, for terminals, and a small bulk station would employ one of the service station-size vapor secondary recovery systems outlined in section 6.5.2.2.

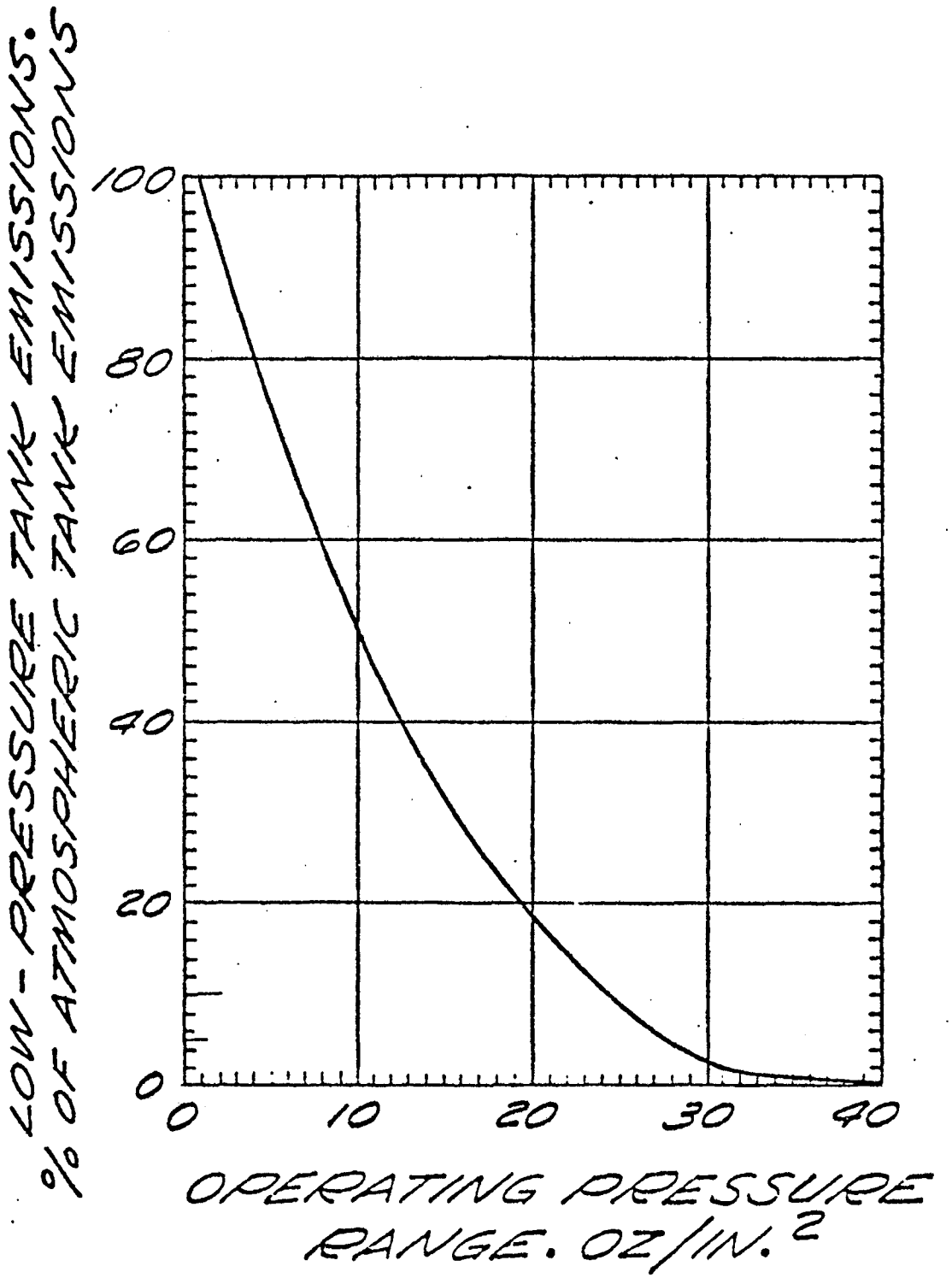

FIGURE 6.5-7

Low Pressure Tank Emissions Vs Tank Operating Pressure Range

6.5.3.3 Operating Reliability

The operating reliability of the balance system is very high. It is simple with very few parts to fail. Vapor recovery systems on the other hand are constructed of complex equipment and are therefore more subject to failures. Considering the sophistication of vapor recovery equipment, the lack of motivation at bulk stations to maintain non-profitable equipment, and the fact that bulk stations are often situated in areas remote to repair services, the vapor balance portion is significantly more acceptable than the secondary recovery portion of the systems described above.

7.0 JET FUEL MARKETING

7.1 The Industry

Ninety-five percent of the jet fuels produced in the nation's refineries is used in U.S. airline or military aircraft. The facilities for manufacturing, transporting and storing these fuels and hydrocarbon emissions associated with these facilities are discussed in this section.

7.1.1 Jet Fuel Description

Basically the jet turbine can operate on any clean burning fuel. Kerosene is a suitable fuel and is widely used. Distillates with wider boiling ranges are also used, however. The first jet fuel, JP-1, was introduced during World War II. Since then the development of jet fuel market has been rapid and continuous.

Naphtha-type jet fuel with a lower vapor pressure was developed in the early 50's. This fuel is a blend of 25-35% kerosene and 65-75% gasoline components. Another jet fuel, a 140°F flash point kerosene, was originally mixed with aviation gasoline, but is now used unblended.

Jet fuel is essentially kerosene-boiling range material with critical specifications of freeze point, flash point, and smoke point. The flash point is controlled by the amount of naphtha blended into the jet fuel. Naphtha tends to lower the pour point and in most instances maximum naphtha (up to flash point restrictions) is used. Hydrocrackers can be used to produce high-quality kerosene blend stocks by isomerizing the paraffins (lowers the freeze point) and by saturating the aromatics (raises the smoke point) (DO-070).

7.1.2 Uses

Data for 1973 show that approximately 95% of all jet fuel consumed in the U.S. was for airline or military use. Table 7.1-1 lists demands by uses of jet fuels in the U.S. (AM-099).

The demand for kerosene-type jet fuel for 1973 was 303 million barrels, while the demand for naphtha-type jet fuel was 80 million barrels. These figures show an increase in the demand for kerosene-type fuel and a decrease in the demand for naphtha-type fuel when compared to 1972 figures (293 million barrels and 88 million barrels, respectively).

7.2 Product Distribution and Storage

7.2.1 Transport

Of the 381 million barrels of jet fuel consumed in the United States in 1972, 48 million barrels were transported by barge and tanker (AM-099), while 229 million barrels were transported by pipeline (US-144). According to this data 95 million barrels of jet fuel was transported by some other means, such as railroad tank car or tank truck, with some 9 million barrels left unaccounted for (AM-099).

7.2.2 Storage

Non-refinery storage capacities for jet fuels in 1968 (with a throughput of 349 million barrels) amounted to 17.4 million barrels (MS-001). As the 1973 throughput exceeds the 1968 figure by 10%, it is assumed that storage capacities have increased accordingly, although 1973 capacities are at present unavailable. Within the marketing system, jet fuels are stored

TABLE 7.1-1

JET FUEL CONSUMPTION (1973)

Product Use	Consumption 10^3bbl/year
Airliner	267,545
Military	96,725
General Aviation	8,760
Non-Aviation	6,935
Factory	3,285
TOTAL	383,250

at bulk stations and bulk terminals. Petroleum bulk stations are defined generally as those having capacities less than 2 million gallons and receiving their supply by truck or rail transport. Bulk terminals generally handle large throughputs and are supplied primarily by pipeline, tanker, or barge.

Storage capacities for naphtha-type jet fuels amounted to 6.1 million barrels in 1968, while those for kerosene-type jet fuels amounted to 11.3 x million barrels (MS-001).

7.3 Emissions and Controls

Table 7.2-1 reports hydrocarbon emission factors for the storage and loading of jet fuels. These factors were compiled by EPA from various sources (EN-071).

The MSA Research Corporation calculated hydrocarbon emissions from jet fuels using 1968 storage capacities. Based on their calculations, the marketing of naphtha-type jet fuels was found to be responsible for approximately 10,500 tons/year of hydrocarbon emissions while the marketing of kerosene-type jet fuels was responsible for the emission of approximately 3,300 tons/year. MSA assumed in their calculations that 75% of bulk storage was equipped with floating roofs.

Traditionally, only jet naphthas have been volatile enough to justify emission controls. Hydrocarbon emission sources in the jet fuels marketing industry are very similar to the hydrocarbon emission sources found in refinery storage operations and in the gasoline marketing industry. For this reason, the emission control measures presented in sections 5.3 and 6.5.1 on refineries and gasoline marketing should be directly applicable to the jet fuel marketing industry.

TABLE 7.2-1

HYDROCARBON EMISSION FACTORS FOR JET FUELS MARKETING

Source	Emission Factors	
	Jet Naphtha	Jet Kerosene
Floating Roof Storage		
Standing Emission (lbs/day 10^3gal)	0.020	0.009
Fixed Roof Storage		
Breathing Emissions (lbs/day 10^3gal)	0.074	0.038
Filling Emissions (lbs/10^3gal throughput	2.4	1.0
Filling Losses		
Rail Car & Tank Truck		
splash loading (lbs/10^3gal)	1.8	0.88
submerged loading (lbs/10^3gal)	0.91	0.45
Marine Vessels		
loading (lbs/10^3gal)	0.60	0.27

Source: (EN-071)

In brief, storage losses can be controlled by converting to floating-roof tanks or by venting excess vapor from fixed roof tanks to a vapor recovery system. Loading and unloading emissions can be controlled by venting the displaced vapors to a vapor recovery unit.

8.0 DISTILLATE AND DIESEL FUEL MARKETING

8.1 The Industry

Approximately 3.0 million barrels per day of refined products in the distillate fuel oils range are used for heating and for diesel power in the nation. The facilities for distribution and storage of these fuels and hydrocarbon emissions associated with these facilities are described in the following pages.

8.1.1 Distillate Fuel Oils

Distillate fuel oil refers to those petroleum products boiling in the 350° to 650°F range. This includes Numbers 1, 2, and 4 fuel oils. Diesel fuels are also included in this fraction. Grade No. 2 fuel oil is the designation given to the heating or furnace oil most commonly used for domestic and small commercial space heating and is the fuel oil generally referred to as distillate fuel. Domestic heating oil is generally a clean product with a low sulfur and ash content and no asphaltic matter. As a result, distillate fuels form no sediment in storage and have less tendency to form ash or carbon deposits on burning. These properties, combined with viscosities much lower than residual fuels, make it easier to achieve clean and trouble-free combustion.

Diesel fuel is similar to distillate fuel. It is often referred to by ASTM grade numbers 1-D and 2-D, as it is marketed as burner fuel and grades 1 and 2. Some typical specifications for fuel oil and diesel fuels are listed in Table 8.1-1 (DO-070).

TABLE 8.1-1
PROPERTIES OF DISTILLATE FUELS

Property	No. 2 Fuel Oil	Diesel Fuel
Flash, °F (min.)	140	145 to 155
Pour Point, °F (max.)	-5	-10 to +10
Sulfur, wt% (max.)	0.5	0.5
Cetane Number (min.)	40.0	52.0

Diesel fuel is burned in the compression ignition engine rather than in a fuel burner. As a result, ignition quality becomes an important characteristic. This ignition quality is expressed as a cetane number which may be improved (raised) by the removal of aromatics or by the inclusion of additives to initiate the combustion process. Paraffinic fuels are better suited for diesel use because of lower self-ignition temperatures.

Both distillates and diesel fuels contain organic sulfur compounds which may cause low-temperature corrosion due to the condensation of acid combustion products and water on boiler-tubes and cylinder walls. Although corrosion can be effectively counteracted by the use of additives in the lubricating oil of diesel engines, there is a definite trend towards lower sulfur contents in distillate fuel oils. Sulfur content can be reduced by desulfurization, and restrictions in parts of the country have been placed on the maximum allowable sulfur content to as little as 0.5 wt% (DO-070).

8.1.3 Use

Forty-eight percent of the 1.1 billion barrels of distillate fuel oil consumed in the U.S. in 1973 was used as heating oil. Twenty-four percent of the total was used as diesel fuel. Table 8.1-2 shows a breakdown of distillate fuel oil demands by uses in 1973.

TABLE 8.1-2

U.S. DISTILLATE FUEL OIL DOMESTIC DEMAND BY USES

(Daily averages in thousands of 42 gallon barrels)

	1973
Heating Oils:	
No. 1	
Automatic Burners	91
Other Heating	40
No. 2	1,222
No. 4	115
Total	1,468
Industrial	184
Oil Company Fuel	41
Electric Utility Company	214[1]
Railroads	282
Vessel Bunkering	73
Military Use	54
Diesel Type	
On Highway	594
Off Highway	155
Total	749
All Other	15
Total	3,080[1]

[1]Includes 69,000 barrels per day of distillate fuel used by steam electric plants. Also included are 17,000 barrels per day of kerosene-type jet fuel used by electric-utility companies.

8.2 Product Distribution and Storage

8.2.1 Distribution

Transportation data for 1972 show that of the 1.06 billion barrels of distillate fuel oil used in the U.S., 138 million barrels were moved by tanker and barge (AM-099) and 657 million barrels were moved by pipeline (US-144). The remaining 268 million barrels were transported by means of railroad tank car and tank truck. Pipeline movement figures are not available for 1973, but of the 1.1 billion barrels consumed 108 million barrels were moved by tanker and barge (AM-099).

8.2.2 Storage

Storage capacities in the marketing system for distillate fuel oil in 1968 (with a throughput of 872 million barrels) amounted to 169 million barrels (MS-001). In 1973 throughput exceeded the 1968 figure by 29 percent. It is assumed storage capacities have been increased accordingly.

8.3 Emissions

Hydrocarbon emissions from the marketing of distillate and diesel fuels primarily originate from storage tank evaporation and from tank truck and rail car loading. Table 8.3-1 lists some average emission factors for marketing operations of distillate and diesel fuel (EN-071). Calculations by MSA Research Corporation estimate that the hydrocarbon emissions from distillate and diesel storage outside of refineries in the year 1968 totaled 50,000 tons/year (MS-001). Because of the low volatility of diesel and distillate fuels, their loading emissions in 1973 were approximately 5,000 tons/year.

TABLE 8.3-1

HYDROCARBON EMISSION FACTORS FOR DISTILLATE FUELS

Source	Emissions
Floating Roof Storage	
Standing Emissions (lbs/day 10^3gal)	0.009
Fixed Roof Storage	
Breathing Emissions (lbs/day 10^3gal)	0.038
Filling Emissions (lbs/10^3 gal) throughput	1.0
Filling Losses	
Rail Car & Tank Truck	
Splash loading (lbs/10^3gal)	0.93
Submerged loading (lbs/10^3gal)	0.48
Marine Vessels	
Loading (lbs/10^3gal)	0.29

Emission controls have not been applied to diesel and distillate fuels marketing because of their relatively low volatility and hydrocarbon emission rate.

9.0 RESIDUAL FUELS

9.1 The Industry

In 1973, some 2.8 million barrels per day of residual oils were used to generate steam, to fire industrial boilers and furnaces, and as fuel for marine vessels. This heavy, "left over" material from refining processes, although more difficult to handle and fire than lighter fuels, has become a very important source of energy in the power, marine, and industrial areas.

9.1.1 Product Description

Residual fuel oils are generally defined as residues from the distillation of crude oils, having a boiling point of 650°F or greater. In addition to these "straight-run" oils, there are fuels of the residual type produced from the various refinery cracking processes. Residual oil is not considered a choice among the fossil fuels. It is composed of the heaviest parts of the crude and contains asphaltic matter, asphaltenes, sulfur, and small amounts of metals. The presence of asphaltic matter can result in the deposition of material which can cause the clogging of strainers, preheaters or burners.

On combustion, part of the sulfur in residual oil may contribute to undesirable boiler-tube deposits. The remainder of the sulfur is either converted into sulfuric acid, a corrosive chemical, or oxides of sulfur, which escape into the atmosphere. Similarly, metals, such as sodium and vanadium, which are found in small amounts in residual oils, can cause fireside tube deposits in boilers, corrosion, and fly-ash air contamination. Some of the sodium can be removed by water washing and centrifugation, but at this time there is no commercially feasible way to remove metals such as vanadium from residual oils (EN-043).

Residual fuel oils are by their nature heavy, viscous, difficult to vaporize, and often difficult to burn quickly under "cold" conditions. In order to reduce viscosity, such fuels are generally burned in equipment which permits relatively steady operation at high fire-box temperatures. Since residual fuels are difficult to vaporize they are atomized in special burners to insure complete and efficient combustion. The more viscous oils must be heated before entering the burners so that they can be atomized.

Residual fuels are normally graded by viscosity, which is an important characteristic in relation to their use. Other properties which may be important, depending upon the application of the fuel, are calorific value, sulfur content and ash. Sulfur content has been limited by government regulation to 1 wt% in certain areas of the country. Upgrading of the poorer quality fuels can be accomplished through coking, solvent deasphalting, residual hydrocracking, and desulfurizing.

9.1.2 Uses

Residual fuel oils can be defined as Number 5 and Number 6 heating (burner) oils, heavy diesel, heavy industrial, and heavy marine (Bunker "C") fuel oils. Fuel oil terminology is not sharply defined. For example, Bunker C fuel is a heavy fuel oil that generally corresponds to Grade 6 fuel oil, and heating oils and burner fuel oils terms are often used synonymously.

Typically, residual fuels are used to provide steam and heat for industry and large buildings, to generate electricity, and to power ships. There is a tendency to describe the fuel

TABLE 9.1-1

U.S. RESIDUAL FUEL OIL DOMESTIC DEMAND BY USES
(DAILY AVERAGES IN THOUSANDS OF 42 GALLON BARRELS)

	1964	1965	1966	1967	1968	1969	1970	1971	1972	1973
Heating Oils:										
No. 5	94	99	106	114	105	109	117	107	112	107
No. 6	251	329	353	368	371	379	392	392	410	408
Total	345	428	459	482	476	488	509	499	522	515
Industrial[1]	429	385	387	361	371	366	383	373	389	412
Oil Company Fuel	118	94	96	104	107	100	105	89	121	139
Electric Utility Co.	267	315	378	434	505	679	856	1,019	1,190[a]	1,396[b]
Railroads	14	11	10	15	12	9	6	4	3	3
Vessel Bunkering	227	202	202	221	239	229	246	216	213	252
Military Use	97	111	115	111	96	87	79	80	67	53
All Other[1]	18	62	69	58	20	20	20	16	24	25
Total	1,515	1,608	1,716	1,786	1,826	1,978	2,204	2,296	2,529[a]	2,795[b]

[1] Includes adjustments to allow total of uses shown to equal total domestic demand.
[a] Excludes approximately 36,000 barrels per day of distillate fuel oil used by steam-electric plants. This use was shown as residual fuel oil in prior years.
[b] Excludes approximately 69,000 barrels per day of distillate fuel oil used by steam-electric plants.

Source: Bureau of Mines, *Sales of Fuel Oil and Kerosine*, Annual.

according to its use. Thus, fuel oils loaded into ships' bunkers are called bunker fuels oils; fuels used for steam raising are called underboiler fuels; and fuels employed in industry are called industrial fuel oils. A breakdown of U.S. residual fuel oil demands over the past decade by uses is shown in Table 9.1-1.

9.1.3 Domestic Production

The steady increase in the use of catalytic cracking in refineries following World War II had the effect of decreasing the percentage yield of residual fuels as well as changing their makeup. As more high-boiling materials were charged to catalytic cracking, the remaining oil sold as residual fuel became heavier and heavier. Previous common industry practice was to blend these heavy stocks with lighter distillates to reduce their viscosities to a salable level for fuels. After the war, refining processes in the United States continued to become more efficient in producing the more profitable products. Residual fuel oils account for 7.6 percent of average petroleum production and refining yields on a national basis (EN-043). In 1973, 971 thousand barrels per day of residual oils were produced in domestic refineries while another 1,827 thousand barrels per day were imported (AM-099). U.S. refineries have continued to reduce the yield of residual fuels; however, if the current residual shortages and higher prices prevail, this trend could be slowed down or even reversed.

9.2 Distribution

9.2.1 Storage

Fixed-roof tanks operated at atmospheric pressure are predominantly used in the storage of residual fuel oils. These fuels have low volatilities and evaporation, breathing, and working losses are minimal. Resid fuels are heated throughout storage and transportation operations to maintain manageable viscosities.

9.2.2 Transportation

Residual fuel oil can be transported by tanker, barge, pipeline, tank truck, or railroad tank car. Of the 2.8 million barrels per day of residual oil consumed in the U.S. in 1973, 1.8 million were imported; and thus, the majority of residual fuels are handled by tanker and barge. Furthermore, in 1973, 44,000 barrels per day of residual oils were transported by tanker and barge from the Gulf Coast to the East Coast and 24,000 barrels per day were transported from the Gulf Coast to the Mid-west via the Mississippi River (AM-099).

The use of the insulated pipeline as a means of transporting residual fuel oil is new in the U.S. Residual fuel, with a pour point of 110°F or above, must be heated to permit movement by normal pipeline operations. Several new insulated lines are now in the planning or construction stages. These lines will serve the fuel needs of major public utility generating plants in the eastern states.

9.3 Emissions

The possibility of substantial hydrocarbon atmospheric emissions from residual fuel oils during storage or transportation is minimal. Number 6 residual fuel oil has a negligible vapor pressure, i.e., less than 0.1 psia, and as a result emission factors for this fuel are generally omitted from pollution studies.

10.0 NATURAL GAS LIQUIDS

10.1 The Industry

Natural gas liquids are hydrocarbon mixtures which are gaseous in underground reservoirs but which are separated and recovered in liquid form by condensation, absorption, and adsorption processes in natural gas plants or petroleum refineries.

Natural gas is composed principally of methane, but also present in decreasing proportions are ethane, propane, butanes, pentanes, hexanes, heptanes, and octanes. Those hydrocarbons which are liquid at atmospheric pressure are recovered from natural gas as "natural gasoline." This fraction consists primarily of butanes, pentanes, and heavier saturated hydrocarbons.

Of the gaseous hydrocarbons which do not condense at atmospheric pressure, methane cannot be liquefied under pressure at ambient temperature, but propane and butanes can be. This C_3 and C_4 fraction is commonly known as liquefied petroleum gas (LPG).

The average domestic production of natural gas liquids (including ethane) from gas processing plants for 1973 was 72.5 million gallons or 1.73 million barrels per day from a total of 763 gas processing plants (FA-080).

The natural gasoline fraction is delivered to the refinery for further processing or for blending with other gasoline stocks. The LPG fraction may be sold at the gasoline plant for fuel, or it may be transported to refineries or chemical plants for use as petrochemical feedstocks.

10.2 Gas Plants

The removal of the condensable hydrocarbons from gas streams is conducted in the field at small processing stations or at large natural gas processing plants which process the bulk of the gas. The gas plants often separate the hydrocarbon components, but the recovered liquids may be sent to the refinery for further separation. The processing facilities, whether in the field or at the plant, consist of four components: feed preparation, gas compression, liquid recovery, and fractionation. The three major types of recovery are used singly or in combinations to effect the necessary separation.

Adsorption

Adsorption units are generally small, handling gas volumes ranging from one to 20 million cubic feet per day. The adsorption towers are filled with activated alumina or charcoal which adsorbs the heavier hydrocarbons. After the material has been saturated with hydrocarbons, heated gas or steam is passed through the bed to desorb the hydrocarbons which are then condensed and ultimately fractionated. This process produces a relatively low yield of natural gas liquids and is usually used where the main concern is producing dry natural gas rather than maximizing natural gas liquids recovery. About 12 percent of the existing natural gas plants use adsorption processes (PR-052).

Absorption

In the absorption process the gas passes through an absorber unit where absorber oil removes the propane and heavier components. The gas stream is contacted with a controlled amount of oil countercurrently in either a packed or bubble tray column.

The oil extracts the absorbable hydrocarbons allowing the methane and ethane to pass up through the tower in the gaseous phase. The enriched absorber oil is then sent to a stripper where individual products are separated under controlled temperature and pressure conditions. About 164 plants in the United States use absorption processes (PR-052).

Refrigeration

Refrigeration processes involve decreasing the temperature of the gas to promote condensation of the heavier hydrocarbons. The condensate is then fed to distillation columns where the separate products are recovered. About 130 domestic plants use refrigeration processes (PR-052).

Combinations of the above three basic methods are often used to increase recovery of the liquefiable hydrocarbons. Notably, 448 plants use combined refrigeration-absorption methods (PR-052). In all of the processing methods, the dry natural gas goes to pipeline sales, the LPG goes to sales or to the refinery, and the natural gasoline goes to the refinery for further processing or blending. There were 763 gas processing plants in the United States in 1973 with an average total throughput of 55.6 billion cubic feet per day (FA-080).

Figures 10.2-1, 10.2-2, and 10.2-3 are flow diagrams of some of the common gas treatment processes. Figure 10.2-1 illustrates an absorption process which incorporates an LPG-natural gasoline splitter. Figure 10.2-2 is a refrigerated absorber using chilled glycol as the absorbent. This system is a more complex one and includes separation of the natural gas liquids. The production includes lean natural gas, ethane, propane, and small quantities of butane and heavier molecules. Figure

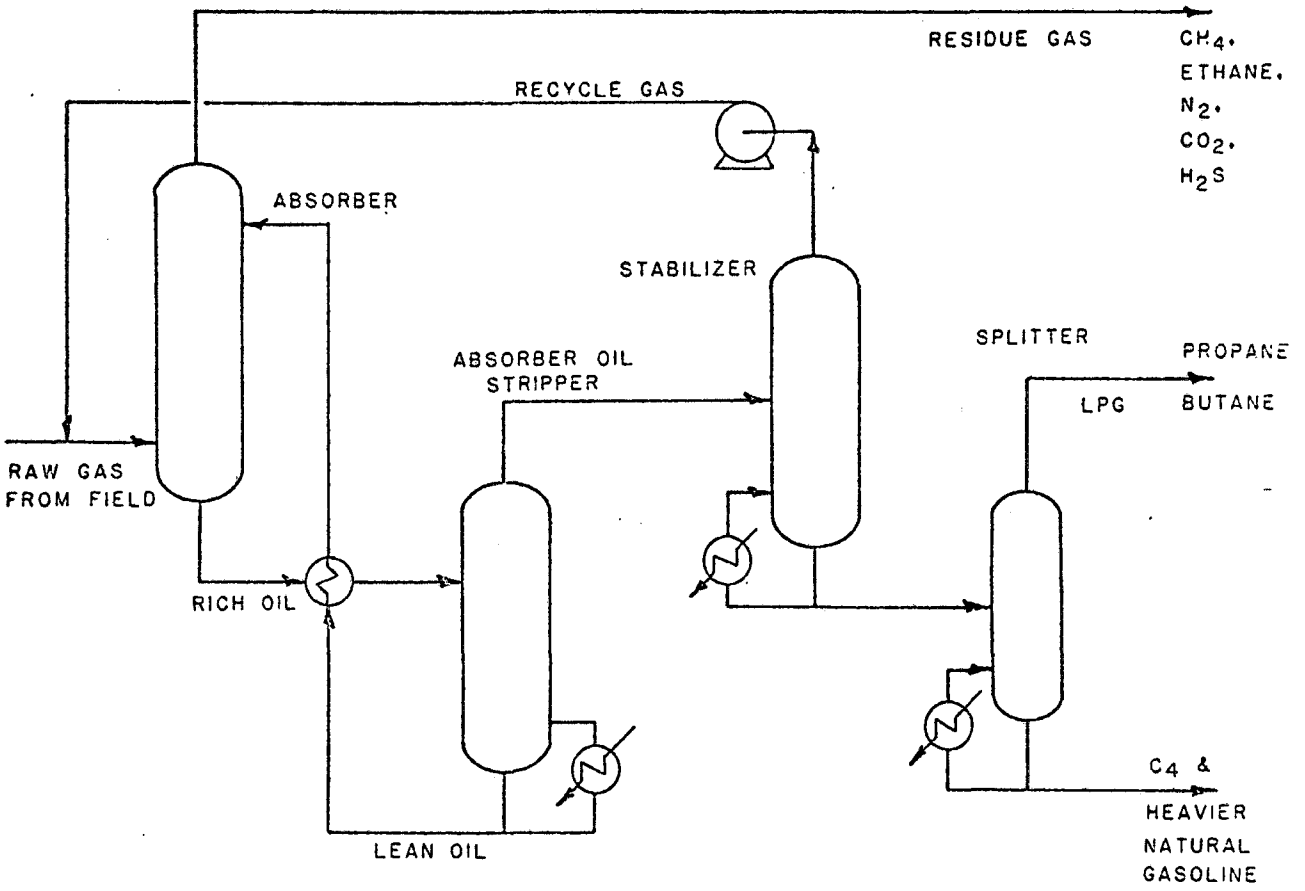

FIGURE 10.2 - 1

ABSORPTION PLANT
WITH LPG - NATURAL GASOLINE SPLITTER
(PR-052)

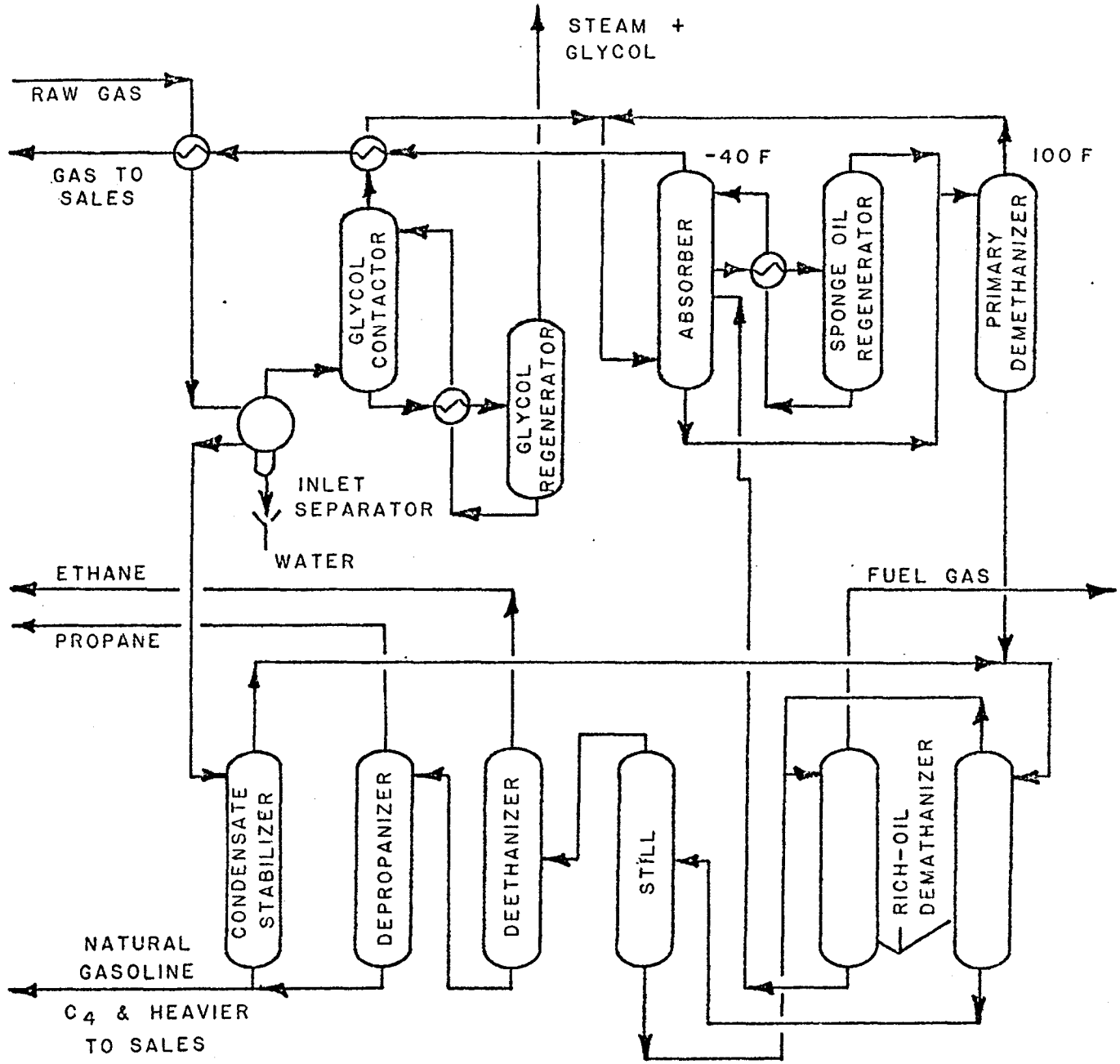

FIGURE 10.2-2

REFRIGERATED ABSORPTION PROCESS
USING CHILLED GLYCOL AS ABSORBENT
(PR-052)

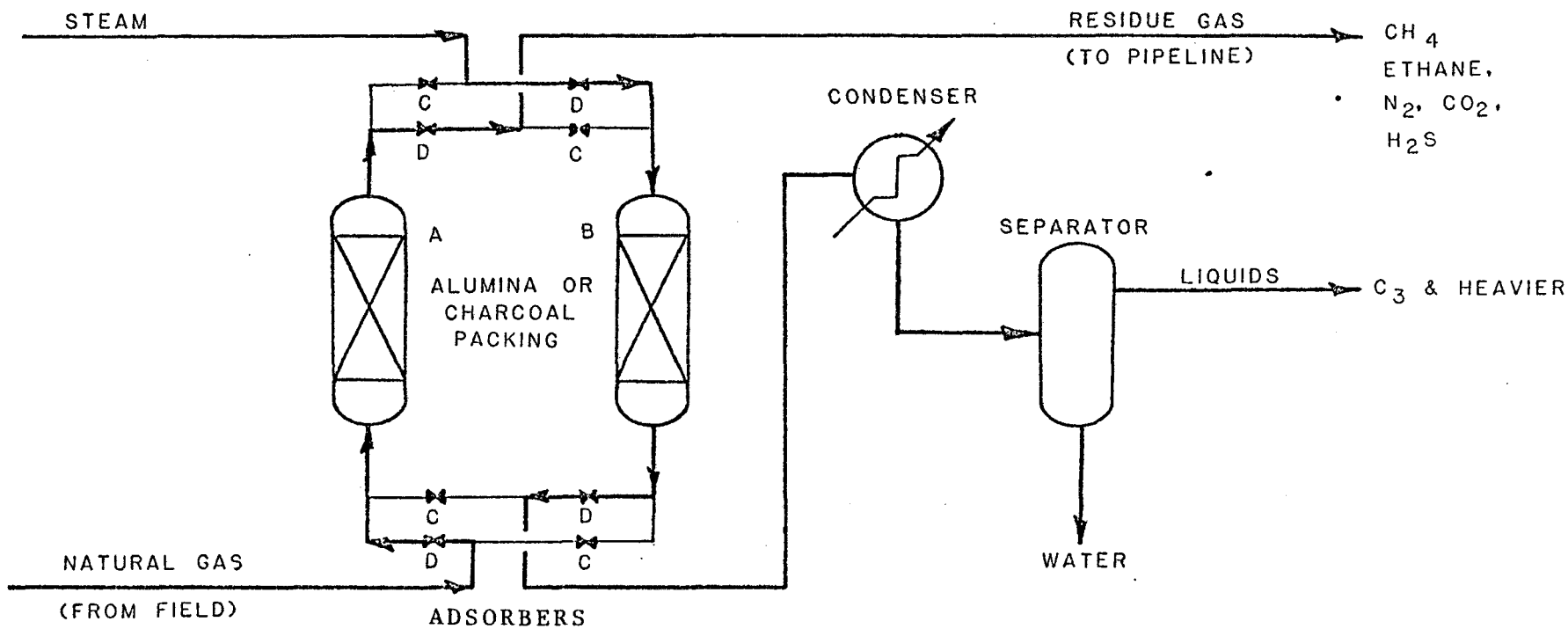

FIGURE 10.2 - 3

ADSORPTION PROCESS
(PR-052)

NOTE:
ADSORBER A ON LINE: ADSORBER B REGENERATING.

10.2-3 is an adsorption process which incorporates two packed columns: one on line while the other is regenerating.

10.3 Product Distribution and Storage

The natural gasoline fraction resulting from natural gas processing is stored in conventional steel tanks prior to shipment to the refineries. The mode of transportation is usually pipeline, but tank trucks, tank cars, barges and tankers are also used. The LPG fraction requires special handling. It is conveniently handled in the liquid form, but exists at atmospheric temperature and pressure in the gaseous state. It must be stored in heavy-walled, high-pressure vessels prior to being shipped in high pressure pipelines, tank trucks, rail cars, barges, or tankers. It may also be stored in underground formations. Refrigeration is also used in the handling the LPG fraction. With this method, the cooled liquid is stored in insulated tanks and transported in refrigerated vessels.

10.4 Emissions

The hydrocarbon emissions from natural gas processing plants result from evaporative losses of the low molecular weight, saturated hydrocarbons. The losses occur from storage tank breathing and filling, and from leaks in pumps, valves, compressors, and other machinery. The natural gas processing plants are essentially miniature refineries, but have a lower air pollution potential because of simpler process schemes and lower thermal requirements (ZA-041).

10.5 Emission Controls

Emission sources in natural gas processing plants are similar to those found in refineries. The emission control measures outlined for refinery emission sources in Section 5.3 are directly applicable. This includes control measures available and the effects of pump and compressor seal leaks, pipeline valve and flange leaks, and loading and storage emissions. Gasoline handling emissions and their control are also applicable. These are discussed in detail in Section 6.0.

11.0 LIQUEFIED PETROLEUM GASES

11.1 Sources and Quantities

Liquid petroleum gas comes from two sources: natural gas processing plants and refineries. Bureau of Mines data shows total production of LPG for 1973 to be 466 million barrels (US-156). Of this, 339 million barrels were contributed by gas plants while 127 million barrels were produced by refineries. The LPG from refineries, which is sometimes called liquid refinery gas (LRG), differs from LPG from gas plants in that it may contain some olefins. Before this LRG can be shipped to fuel sales, it must be passed through a polymerization unit to reduce the concentration of olefins which will tend to form a gummy residue in pipes and vessels. In addition to the LPG produced domestically, the United States imported 48 million barrels in 1973. Figure 11.1-1 represents the production and disposition of LPG in the United States for 1973 (US-156).

11.2 Recovery of LPG from Refineries

Crude oil stored at atmospheric pressure contains very little propane and butane. The gas streams from thermal and catalytic cracking, reforming, and coking units, however, contain appreciable quantities of propane, propylene, butanes, and butylenes. These components are extracted and separated by conventional absorption, adsorption, condensation, and fractionation processes. The LPG is treated to remove hydrogen sulfide and moisture before being delivered to commercial sales. The olefins are nominally used as petrochemical feedstocks.

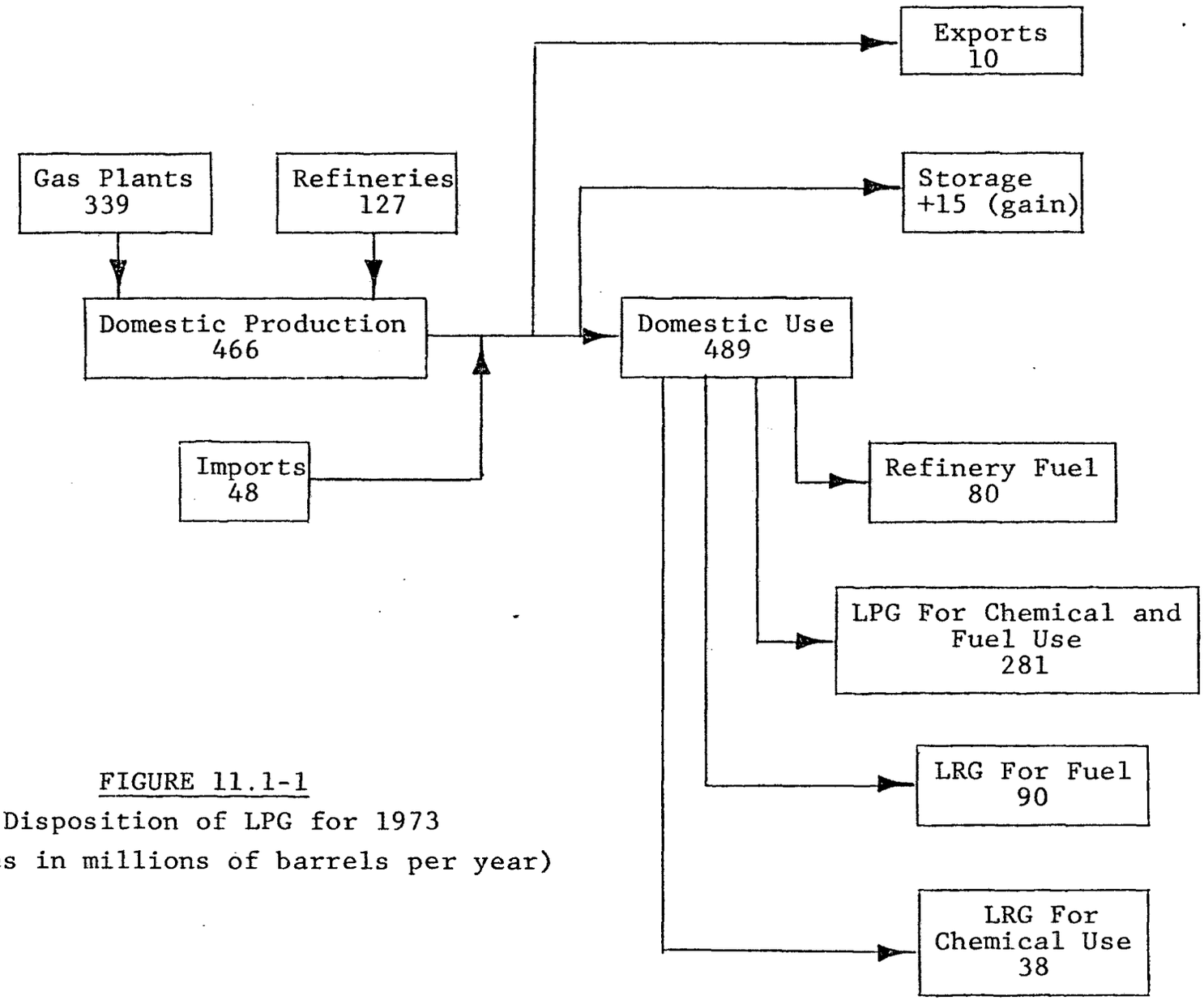

FIGURE 11.1-1

Disposition of LPG for 1973

(Rates in millions of barrels per year)

11.3 Distribution, Storage and Handling

LPG is stored and shipped as a liquid and used as a gas; it must be kept under a moderate pressure. Consequently, storage and transfer tanks must have a design pressure of about 250 psig.

LPG can be stored at the necessary points along the distribution chain in underground formations or aboveground in horizontal cylindrical or spherical pressure tanks. Spheres in the 5000 to 10,000 barrel range are common, with some as large as 20,000 barrels. Horizontal cylindrical tanks are usually of 30,000 gallon capacity, although some are 60,000 gallons or larger. Most of the storage is at the point of production.

The distribution pattern of LPG has changed from local distribution in small containers to distribution in bulk in large vessels by road, rail, or sea. In North America, rail tank cars have capacities of up to 80 tons (50,000 gallons). Tank truck capacities are in the 20 ton category. LPG is similarly transported at sea in large pressure vessels. Pipelines are commonly used in North America to move LPG over long distances from refineries and gas wells to major industrial and utility users.

Transfer from tank cars or tank trucks is through a closed system of high pressure lines by means of a liquid pump, gas compressor, or gas pressure. Connections are made by flexible hoses or pipes. If a pump is used, liquid is pumped from the transport tank into storage, the pressures being equalized through the connections. If a compressor is used, vapor is taken from the storage container and discharged into the vapor space of the tank car or truck, creating a pressure differential

between the two which forces liquid into the storage container. Gas under pressure may be used to increase the tank car pressure and force liquid to flow to the storage tank.

An alternative to handling LPG under high pressure is handling it at reduced temperatures. At the lower operating pressures, it can be stored and transported in lighter, insulated tanks. The refrigerated LPG may be stored in underground pits or in depleted formations to await transport. It may also be shipped in ocean-going tankers more easily and more economically than in pressure vessels. The economic incentive has caused the method of distribution by sea to change drastically from the use of pressure vessels carrying several hundred tons to refrigerated vessels carrying ten thousand tons or more.

11.4 Emissions

Emissions from LPG consist of evaporative losses of propane and butane, low molecular weight saturated hydrocarbons. At any point that the system is open to atmospheric temperature and pressure, emissions will result. However, since LPG must be stored and handled under pressure it is seldom exposed to the atmosphere except through fugitive leaks. Refinery produced gas will, in addition, add emissions of propylene and butylenes, photochemically reactive hydrocarbons.

11.5 Emission Controls

Because hydrocarbon emissions from LPG marketing operations are predominantly due to fugitive losses, emission controls consist of good housekeeping practices and regular maintenance of potential leak sources, i.e. valves, fittings, and seals.

12.0 PETROCHEMICAL FEEDSTOCKS

The petrochemical industry has become an important, integral part of the oil industry. Measured by volume of feed and products, the petrochemical industry represents a relatively small part of the total petroleum industry; however, these products are valued much higher per unit weight than average oil products. The United States' production of petrochemical feedstocks in 1973 was in excess of 326 million barrels. The main feedstocks for the industry are hydrocarbons present in natural gas and other hydrocarbons produced in refinery operations, such as olefins, aromatics, and higher molecular-weight paraffins. The petrochemical industry is very complex, involving thousands of products and intermediates for other industries. This discussion, while limited to a few basic feedstocks and their ultimate uses, is intended to illustrate the variety of chemicals derived from petroleum based stocks.

12.1 Methane

Methane from natural gas is used in several important processes. Ammonia is produced by reforming or oxidation of methane to yield hydrogen which is catalytically reacted with nitrogen from the atmosphere to yield ammonia, primarily for use in fertilizers.

Methyl alcohol is another important methane-derived petrochemical. Methane is converted to a synthesis gas mixture of hydrogen and carbon monoxide which is then used in the manufacture of methyl alcohol, higher alcohols, and synthetic gasoline.

Acetylene, made by controlled oxidation of natural gas, is used to make vinyl chloride, acrylonitnile, neoprene rubbers, acetaldehyde, acetic acid, perchloroethylene, and trichloroethylene. Hydrogen cyanide formed by passing methane and ammonia over a catalyst is used in the manufacture of acrylonitrile and adiponitrile for the synthetic fiber industry. Chlorinated solvents are produced by reacting methane with chlorine, the product depending on the number of chlorine atoms attached to the molecule. Methane reacted with sulfur gives carbon disulfide for use in rayon manufacture. Controlled combustion of methane produces carbon black for use in inks and in tire manufacture.

12.2 Ethane-Ethylene

Ethylene, which is used as a feedstock for a large number of products, is produced primarily from pyrolysis of ethane and propane, although in recent years, heavier cracking stocks such as naphtha and gas oil, are becoming more widely used. Polyethylene and ethylene oxide are the major ethylene-based products. Ethylene glycol for antifreeze, ethanolamines, acrylonitrile, and di- and tri-ethylene glycol are derived from ethylene oxide.

Ethyl alcohol made by hydration or hydrolysis of ethyl sulfates is a principal industrial solvent. It can be further processed to acetaldehyde which can then be oxidized to acetic acid and acetic anhydride.

Ethyl benzene, made by the reaction of ethylene and benzene is dehydrogenated to form styrene which is used in production of synthetic rubber and polystyrene. Ethyl chloride, made by the addition of hydrogen chloride to ethylene is further used to manufacture tetraethyl lead. Ethylene dichloride is produced by catalytically reacting ethylene and chlorine and is used to make vinyl chloride, polyvinyl chloride, and ethylene diamine.

12.3 Propane-Propylene

The hydrocarbon components of LPG and LRG (liquid refinery gas) serve as important feedstocks for the petrochemical industry. Propane can be oxidized to give methyl alcohol, formaldehyde, acetaldehyde, and acetone. Isopropyl alcohol, which is made by hydration of propylene, is used for solvents, deicing additives, antifreeze, rubbing alcohols, and as feedstock for the production of acetone. Low weight polymers of propylene are used in synthetic detergents.

Propylene oxide, made by the chlorohydrination of propylene, is hydrated to both propylene glycol and dipropylene glycol used in the manufacture of polyurethane foams. Chlorination of propylene yields allylchloride which is used in the manufacture of glycerine and epoxy resins and also yields propylene dichloride. Direct oxidation of propylene gives acrolein. Alkylation of propylene and benzene yields cumene which is used in the production of phenol, acetone, and methyl styrene. The increasingly important polypropylene is made by polymerization of propylene.

12.4 Butane-Butylenes

Catalytic dehydrogenation of butane yields butylenes and butadienes. Oxidation of butane yields acetic acid, acetaldehyde, methyl alcohol, propionic acid, butyric acid, n-propyl alcohol, n-butyl alcohol, and isobutyl alcohol. Butylenes, recovered to a large extent from refinery gases are used in making butadiene and isobutylenes for synthetic rubber manufacture, secondary butyl alcohol and methyl ethyl ketone.

12.5 Aromatics

The main aromatics recovered from reforming operations are benzene, toluene and the xylenes. This group of compounds is an important source of chemical intermediates. Benzene alkylated with ethylene gives ethyl benzene from which styrene is obtained by dehydrogenation. Phenol, an important intermediate in the manufacture of synthetic resins, nylon, herbicides, and disinfectants, is also made from benzene. Toluene is used as a solvent and in the manufacture of trinitrotoluene and polyurethane. The three xylene isomers are oxidized to phthalic acids, used in the synthetic fiber industry.

12.6 Emissions

Emissions from producing and handling petrochemical feedstocks contain a relatively high percentage of reactive and toxic hydrocarbon compounds such as the olefins and the aromatics in addition to saturated hydrocarbons of a very unreactive nature. The emissions from production of petrochemical feedstocks at refineries are part of the total refinery losses discussed in Section 5.0. The high economic value of petrochemical feedstocks has been an incentive for the petroleum industry to minimize their loss to the atmosphere.

13.0 STATUS OF CONTROL TECHNOLOGY

This section contains a review of the existing control technology applicable to hydrocarbon emission sources, areas where this control technology remains to be applied, and areas where further technology development is required.

13.1 Existing Control Technology

To summarize, the status of existing control measures for hydrocarbon emissions from the petroleum industry are as follows:

Storage and loading losses - fixed roof tanks can be replaced with floating roof tanks, products can be bottom loaded, and excess vapors from loading operations and tankage can be processed in vapor recovery units.

Wastewater systems - systems can be enclosed, and vapors purged from the systems can be combusted or recovered in a vapor recovery unit.

Pump and compressor seals - packed seals can be replaced with mechanical seals, and double seals can be installed. Regular maintenance and good housekeeping are also important control measures.

Relief valves - rupture discs can be placed upstream of the relief valve, or the valve can be vented to a blowdown system.

Catalyst regeneration - regeneration off gas can be combusted in either a CO boiler or an incinerator.

Vacuum jets and barometric condensers - replace vacuum jets with mechanical pumps, barometric condensers with surface condensers, and vent non-condensable gases to a vapor recovery or a vapor disposal unit.

Blowdown systems - can be designed for recycling condensable hydrocarbons and processing non-condensables in vapor disposal or vapor recovery units.

Asphalt blowing - off gases can be incinerated and/or water scrubbed.

Pipeline valves and flanges, and miscellaneous fugitive losses - improved housekeeping and regular maintenance are the best control measures.

Service station bulk fuel drops - vapor displacement from the underground tank to the unloading tank truck. Pressure-vacuum valves on the tank vent.

Automobile refueling - in cases where good nozzle fits are possible, displaced vapors from the automobile tank can be routed to the underground tank. Vacuum units coupled with vapor recovery units are also available to control gasoline vapors displaced during automobile refueling.

Good housekeeping practices and regular maintenance play a very important role in all hydrocarbon emission control measures, especially for the control of fugitive emissions.

Table 13.1-1 summarizes the major hydrocarbon emission sources identified for each area of the petroleum industry. Table 13.1-1 also presents average emission factors for the uncontrolled emission source, for the average emission source based on current degrees of control, and for a fully controlled emission source.

13.2 Current Application of Control Technology

Good indicators of the degree of emission control currently being applied to hydrocarbon emission sources in the

TABLE 13.1-1

SUMMARY OF CONTROLLED AND UNCONTROLLED HYDROCARBON EMISSIONS FROM THE PETROLEUM INDUSTRY

	1973 Throughput Rate	Emission Factors			Estimated 1973 Emissions (tons/day)	Comment on Control Device Applied
		Uncontrolled	Current Controls	Completely Controlled		
Natural Gas Production and Processing						
vented nat. gas	65.9×10^9 SCF/day	NA	20 lbs/10^6 SCF	NA	659	vapor recovery
fugitive nat. gas leaks	65.9×10^9 SCF/day	NA	190 lbs/10^6 SCF	NA	6261	housekeeping, maintenance
					6920 total	
Crude Oil Production						
storage	9.2×10^6 bpd	NA	4 lbs/10^3 bbl	NA	17	floating roofs
wastewater separator	9.2×10^6 bpd	NA	8 lbs/10^3 bbl	NA	36	cover
pump seals	9.2×10^6 bpd	NA	74 lbs/10^3 bbl	NA	339	mechanical seals
compressor seals	9.2×10^6 bpd	NA	4 lbs/10^3 bbl	NA	17	mechanical seals
relief valves	9.2×10^6 bpd	NA	8 lbs/10^3 bbl	NA	36	rupture discs, vapor recovery
pipeline valves	9.2×10^6 bpd	NA	12 lbs/10^3 bbl	NA	53	maintenance
					498 total	
Crude Transportation						
storage	12.4×10^6 bpd	660 lbs/10^3 bbl	256 lbs/10^3 bbl	136 lbs/10^3 bbl	1587	floating roofs
rail & truck loading	0.2×10^6 bpd	540 lbs/10^3 bbl	198 lbs/10^3 bbl	90 lbs/10^3 bbl	20	bottom loading
marine loading	1.1×10^6 bpd		96 lbs/10^3 bbl	96 lbs/10^3 bbl	53	bottom loading already in use
					1660 total	
Refinery Operations						
boilers & heaters	12.4×10^6 bpd	UD	10 lbs/10^3 bbl	UD	62	
compressor engines	12.4×10^6 bpd	UD	16 lbs/10^3 bbl	UD	99	housekeeping
storage	12.4×10^6 bpd	1200 lbs/10^3 bbl	470 lbs/10^3 bbl	250 lbs/10^3 bbl	2914	floating roofs
loading operations	12.4×10^6 bpd	32 lbs/10^3 bbl	32 lbs/10^3 bbl	5 lbs/10^3 bbl	198	vapor recovery
FCC unit	4.03×10^6 bpd	220 lbs/10^3 bbl (1)	NA	neg	111	CO boiler
TCC unit	0.38×10^6 bpd	87 lbs/10^3 bbl (1)	NA	neg	4	CO boiler
vacuum jets	12.4×10^6 bpd	57 lbs/10^3 bbl	≈57 lbs/10^3 bbl	neg	353	surface condenser, mechanical pump
blowdown	12.4×10^6 bpd	325 lbs/10^3 bbl	160 lbs/10^3 bbl	5 lbs/10^3 bbl	992	vapor recovery
asphalt blowing	0.65×10^6 bpd	60 lbs/ton asphalt	NA	neg	neg	incineration, scrubbing
process drains & wastewater separators	12.4×10^6 bpd	200 lbs/10^3 bbl	105 lbs/10^3 bbl	10 lbs/10^3 bbl	651	cover
pump seals	12.4×10^6 bpd	UD	17 lbs/10^3 bbl	UD	105	mechanical seals
compressor seals	12.4×10^6 bpd	UD	5 lbs/10^3 bbl	UD	31	mechanical seals
pressure relief valves	12.4×10^6 bpd	11 lbs/10^3 bbl	11 lbs/10^3 bbl	neg	68	rupture discs, vapor recovery
cooling tower	12.4×10^6 bpd	UD	UD	10 lbs/10^3 bbl (2)	62	housekeeping
pipeline valves & flanges	12.4×10^6 bpd	UD	28 lbs/10^3 bbl	UD	174	housekeeping, maintenance
blind changing	12.4×10^6 bpd	UD	0.3 lbs/10^3 bbl	UD	2	housekeeping, purging
sampling	12.4×10^6 bpd	UD	2.3 lbs/10^3 bbl	UD	14	housekeeping
other	12.4×10^6 bpd	UD	7 lbs/10^3 bbl	UD	43	housekeeping, maintenance
					5883 total	
Residual Fuels	2.8×10^6 bpd	neg		neg		
Natural Gas Liquids	1.73×10^6 bpd	NA	NA	NA		
Liquefied Petroleum Gases	1.41×10^6 bpd	NA	NA	NA		

TABLE 13.1-1 - SUMMARY OF CONTROLLED AND UNCONTROLLED HYDROCARBON EMISSIONS FROM THE PETROLEUM INDUSTRY (Cont.)

	1973 Throughput Rate	Emission Factors			Estimated 1973 Emissions (tons/day)	Comment on Control Device Applied
		Uncontrolled	Current Controls	Completely Controlled		
Gasoline Marketing						
bulk terminal						
storage	6.7×10^6 bpd	600 lbs/10^3bbl	NA	30 lbs/10^3bbl	101	floating roofs
loading	6.7×10^6 bpd	520 lbs/10^3bbl	NA	17 lbs/10^3bbl	57	bottom loading, vapor recovery
bulk station						
storage	1.1×10^6 bpd	600 lbs/10^3bbl	≈600 lbs/10^3 bbl	30 lbs/10^3bbl	330	floating roofs
loading	1.1×10^6 bpd	520 lbs/10^3bbl	≈520 lbs/10^3 bbl	17 lbs/10^3bbl	286	bottom loading, vapor recovery
service station						
filling underground tk.	6.1×10^6 bpd	11.5 lbs/10^3gal	≈ 9.4 lbs/10^3 gal	0.37 lbs/10^3 gal	1204	submerged fill, vapor balance
filling automobile	6.1×10^6 bpd	11.0 lbs/10^3gal	≈11.0 lbs/10^3 gal	1.10 lbs/10^3 gal	1409	vapor recovery, vapor balance
storage	6.1×10^6 bpd	1.0 lbs/10^3gal	≈1.0 lbs/10^3 gal	neg	128	vapor recovery
aviation gasoline						
storage	45×10^3 bpd	600 lbs/10^3bbl	600 lbs/10^3bbl	30 lbs/10^3bbl	14	submerged fill, vapor balance
loading	45×10^3 bpd	520 lbs/10^3bbl	520 lbs/10^3bbl	17 lbs/10^3bbl	12	vapor recovery
					3541 total	
Jet Fuel Marketing						
Jet Naphtha						
storage-breathing	≈6.7×10^6 bbl	0.074 lbs/d-10^3 gal ②	NA	0.02 lbs/d-10^3 gal ②	10	floating roofs
storage-filling	217×10^3 bpd	2.4 lbs/10^3gal	NA	neg	11	floating roofs
rail/truck loading	149×10^3 bpd	1.8 lbs/10^3gal	NA	0.91 lbs/10^3 gal	6	bottom loading
marine loading	27×10^3 bpd	NA	0.60 lbs/10^3 gal	0.60 lbs/10^3 gal	0	bottom loading already in use
Jet Kerosene						
storage-breathing	12.4×10^6 bbl	0.038 lbs/d-10^3 gal ②	≈0.038 lbs/d-10^3gal ②	0.009 lbs/d-10^3gal ②	10	floating roofs
storage-filling	833×10^3 bpd	1.0 lbs/10^3gal	≈1.0 lbs/10^3 gal	neg	17	floating roofs
rail/truck loading	90×10^3 bpd	0.88 lbs/10^3gal	≈0.88 lbs/10^3 gal	0.45 lbs/10^3 gal	2	bottom loading
marine loading	100×10^3 bpd	NA	0.27 lbs/10^3 gal	0.27 lbs/10^3 gal	1	bottom loading already in use
					57 total	
Diesel & Distillates						
storage-breathing	≈218×10^6 bbl	0.038 lbs/d-10^3 gal ②	≈0.038 lbs/d-10^3gal ②	0.009 lbs/d-10^3gal ②	174	floating roofs
storage-filling	3.08×10^6 bpd	1.0 lbs/10^3gal	1.0 lbs/10^3gal	neg	65	floating roofs
truck/rail loading	$.79 \times 10^6$ bpd	0.93 lbs/10^3gal	0.93 lbs/10^3 gal	0.48 lbs/10^3 gal	15	bottom loading
marine loading	$.30 \times 10^6$ bpd	NA	0.29 lbs/10^3 gal	0.29 lbs/10^3 gal	2	bottom loading already in use
					256 total	

① units in lb/10^3bbl of cat cracker capacity

② units in lb/10^3bbl of storage capacity

③ Emission factors for existing cooling towers were too variant to average. However emissions from recently constructed cooling towers are down to 10 lb/10^3bbl

NA - data not available
UD - emissions from this source were undefinable
neg- emissions are negligible

petroleum industry are the "Current Control" emissions factors presented in Table 13.1-1. The overall impact of applying current control technology can be studied using the 1973 throughput rates.

The data presented in Table 13.1-1 also indicate that in nearly all areas of the petroleum industry, existing control technology has not been fully applied.

Natural gas production and processing is a major area where the potential exists for significant hydrocarbon emissions reductions. High pressures, presence of corrosive hydrogen sulfide and moisture, volatility of the products, and remoteness of the installations are factors which tend to increase hydrocarbon losses from natural gas production and processing. Repair and replacement of old and faulty equipment as well as good housekeeping are major control measures. Normally vented hydrocarbons can be routed to vapor recovery units. It should also be noted, however, that while the hydrocarbon emissions from natural gas operations are high, they are primarily methane, a non-reactive hydrocarbon.

The high storage emissions occurring throughout the petroleum industry are expected to decline as a greater number of storage tanks are equipped to comply with current regulations requiring floating roofs or vapor recovery.

Current emissions from vacuum jets equipped with barometric condensers can be reduced to negligible levels by converting to mechanical vacuum pumps, surface condensers, and by venting non-condensable vapors to the blowdown system.

There remain a sizable number of only partially controlled blowdown systems. Application of existing hydrocarbon recycle and vapor recovery technology to these systems will greatly reduce refinery emissions.

One other group of significant hydrocarbon emission sources in refineries for which there exists control technology are process drains, wastewater systems, and wastewater separators. Emissions for these sources can be reduced through minimizing the contamination of water with oil and by enclosing all wastewater systems. Manhole covers can be installed. There are now fixed roofs and floating roofs for API oil-wastewater separators. In some cases it may also be practical to vent enclosed wastewater systems and separators to vapor recovery units.

The high hydrocarbon emissions from gasoline marketing operations are expected to drop greatly as vapor recovery systems are added to service stations and bulk terminals to comply with new or pending regulations. Other reductions would be realized with the addition of recovery systems at bulk stations. At present, emission control regulations for bulk stations are not defined, however.

The greatest progress towards full application of control technology has been made in those areas exhibiting economic incentives for control or in those areas governed by emission regulations. Typical examples are volatile product storage where the petroleum industry is installing floating roofs for product conservation reasons, and gasoline marketing controls which were induced in part by emission regulations.

13.3 Gaps in Control Technology

Review of the "Completely Controlled" emission factors indicate there is control technology available for all major hydrocarbon emission areas within the petroleum industry. However, two areas where further development may be required are floating roof tanks and the service station portion of gasoline marketing.

The emission factors for completely controlled storage tanks indicate that the hydrocarbon emissions from storage tanks equipped with floating roofs will still be sizeable. For some locations with specific hydrocarbon problems, it may be necessary to improve floating roof seals or to develop other forms of emission control.

Although the technology for controlling hydrocarbon emissions from refueling automobiles is well developed there remain several problems. Nozzle manufacturers have had difficulties designing a dispensing nozzle which consistently effects a good seal at the nozzle-fillneck interface. Problems have also arisen with the dependability and control efficiency of service station vapor recovery units.

REFERENCES

AM-055 American Petroleum Inst., Committee on Refinery Environmental Control, Hydrocarbon Emissions From Refineries, API Publication No. 928, Washington, D.C. (1973).

AM-065 American Petroleum Inst., Div. Statistics & Economics, Annual Statistical Review. U.S. Petroleum Industry Statistics 1956-1972, Washington, D.C. (1973).

AM-085 American Petroleum Inst., Evaporation Loss Committee, Evaporation Loss From Tank Cars, Tank Trucks, and Marine Vessels, Washington, D.C. (1959).

AM-099 American Petroleum Institute, Annual Statistical Review. Petroleum Industry Statistics 1964-1973, Washington, D.C. (1974).

AM-155 American Waterways Operators, Inc., Big Load Afloat. U.S. Domestic Water Transportation Resources, Washington, D.C. (1973).

AN-089 "Annual Refining Survey," Oil & Gas Journal (1 April 1974).

AT-040 Atmospheric Emissions From Petroleum Refineries. A Guide for Measurement and Control, Public Health Service, Washington, D.C. (1960).

AU-020 Audits and Surveys, Inc., "1974 Nationwide Retail Census Reveals," Press Release, New York, NY (September 1974).

CA-102 Cavender, James H., David S. Kircher, and Alan J. Hoffman, Nationwide Air Pollutant Emission Trends 1940-1970, Office of Air and Water Programs, EPA, Research Triangle Park, NC (1973).

CA-155 California Air Resources Bd., L. A. Co. APCD, and Western Oil and Gas Assoc., Gasoline Modification - Its Potential As An Air Pollution Control Measure In Los Angeles County, Final Report (November 1969).

CH-182 Chilingar, George V. and Carrol M. Beeson, Surface Operations In Petroleum Production, American Elsevier, New York, NY (1969).

REFERENCES (Cont.)

CI-005 Citizen's Advisory Committee on Environmental Quality, Citizen's Action Guide To Energy Conservation, Washington, D.C. (1973).

DA-004 Danielson, John A., Air Pollution Engineering Manual, PHS Publication No. 999-AP-40, National Center for Air Pollution Control (1967).

DA-069 Danielson, John A., comp. and ed., Air Pollution Engineering Manual, 2nd ed., AP-40, Office of Air and Water Programs, EPA, Research Triangle Park, NC (1973).

DO-070 Dosher, John R., "Trends In Petroleum Refining," Chem. Eng. 77 (17), 96 (1970).

DU-001 Duprey, R. L., Compilation of Air Pollutant Emission Factors, PHS Pub. No. 999-AP-42 (October 1969).

EL-033 Elkin, H. F. and R. A. Constable, "Source/Control of Air Emissions," Hydrocarbon Proc. 51 (10), 113 (1972).

EN-043 Environmental Conservation, National Petroleum Council, Washington, D.C. (1972).

EN-045 Environmental Research Catalog, Smithsonian Scientific Information Exchange, Washington, D.C. (1972).

EN-071 Environmental Protection Agency, Compilation of Air Pollutant Emission Factors, 2nd ed. with supplements, AP-42, Research Triangle Park, NC (1973).

EN-182 Environmental Protection Agency, Emission Standards and Engineering Division, Private Communication (September 1974).

FA-080 Farrar, Gerald L., "Gas Capacity Is Up; Throughput, Liquids Down," Oil Gas Journal 76 (8 July 1974).

FO-001 Fogel, M. E., et al., Comprehensive Economic Cost Study of Air Pollution Control Costs For Selected Industries and Selected Regions, Research Triangle Institute, Durham, NC (February 1970).

FO-027 Ford Foundation, Energy Policy Project, Exploring Energy Choices, Preliminary Report, Washington, D.C. (1974).

LA-129 Laster, L. L., Atmospheric Emissions From The Petroleum Refining Industry, Final Report, PB 225 040, EPA 650/2-73-017, Control Systems Lab., EPA, Research Triangle Park, NC (1973).

REFERENCES (Cont.)

LU-044 Lundberg Survey, Inc., "Service Station Throughput. Average Monthly Sales of Gasoline Per Station, 1973-74, United States," Lundberg Letter Issue 046 (September 1974).

MA-314 Maxwell, Robert, "Private Communication," EPA, Mobile Source Enforcement Div. (10 September 1974).

MS-001 MSA Research Corp., Hydrocarbon Pollutant Systems Study, Vol. 1. Stationary Sources, Effects, and Controls, APTD-1499, PB 218 073, Evans City, PA (1972).

NA-168 National Petroleum News, Fact Book, Mid-May 1974, McGraw-Hill, NY (1974).

NI-027 Nichols, Richard A., Control of Evaporation Losses in Gasoline Marketing Operations, Parker-Hannifin, Irvine, CA.

PR-052 Processes Research, Inc., Industrial Planning and Research, Screening Report, Crude Oil and Natural Gas Production Processes, Final Report, Contract No. 68-02-0242, Cincinnati, Ohio (1972).

PR-074 Pross, T. W., "Marine Transportation-State-Of-The-Art," Presented at the Intersociety Conference on Transportation, Denver, Colorado, September 1973, New York, ASME (1973).

RA-119 Radian Corporation, A Program to Investigate Various Factors in Refinery Siting, 2 Vols., Final Report with map inserts, Austin, TX (1974).

SH-137 Shelton, Ella Mae, Motor Gasolines, Winter 1971-72, Petroleum Products Survey No. 75, Bureau of Mines, Washington, D.C.

SH-138 Shelton, Ella Mae, Motor Gasolines, Summer 1973, Petroleum Products Survey No. 83, Bureau of Mines, Washington, D.C.

TR-042 TRW, Inc., Transportation and Environmental Operations, Photochemical Oxidant Control Strategy Development For Critical Texas Air Quality Control Regions, Contract No. 68-02-0048, Redondo Beach, CA (1973).

UN-016 "Underground Gas Storage Tops 6 Trillion," Oil Gas Journal, Vol. 1, (July 1974).

REFERENCES (Cont.)

US-031 U.S. Department of Commerce, Bureau of the Census, 1967 Census of Business, Vol. III Wholesale Trade Subject Reports, Washington (1971).

US-143 U.S. Department of Transportation, Bureau of Public Roads, High Statistics, 1972, Washington, D.C. (1973).

US-144 U.S. Bureau of Mines, Minerals Yearbook 1972, Vol. 1, Metals, Minerals, and Fuels, Washington, D.C. (1974).

US-156 U.S. Bureau of Mines, Crude Petroleum, Petroleum Products, and Natural Gas Liquids, Monthly Petroleum Statement, December 1973, Washington, D.C. (1973).

WA-086 Walters, R. M., "How An Urban Refinery Meets Air Pollution Requirements," CEP 68 (11), 85 (1972).

ZA-041 Zaffarano, Richard F., Natural Gas Liquids: A Review of Their Role in the Petroleum Industry, I.C. 8441, Bureau of Mines, Washington, D.C. (1970).

UNIT CONVERSIONS

To Convert From	To	Multiply By
lb	kg	0.454
bbl	l	159.0
lb/10^3 bbl	kg/10^3l	.002855
scf	Nm^3	0.0283
ton	MT	0.9072
gal	l	3.785
lb/10^3 gal	kg/10^3l	0.1199
lb/ton	kg/MT	0.5004
Btu/bbl	kcal/l	1.585
ton	kg	907.2
Btu	kcal	0.252

TECHNICAL REPORT DATA
(Please read Instructions on the reverse before completing)

1. REPORT NO. EPA-600/2-75-042	2.	3. RECIPIENT'S ACCESSION NO.
4. TITLE AND SUBTITLE Control of Hydrocarbon Emissions from Petroleum Liquids		5. REPORT DATE September 1975
		6. PERFORMING ORGANIZATION CODE
7. AUTHOR(S) C. E. Burklin, E. C. Cavanaugh, J. C. Dickerman, S. R. Fernandes, and G. C. Wilkins		8. PERFORMING ORGANIZATION REPORT NO.
9. PERFORMING ORGANIZATION NAME AND ADDRESS Radian Corporation 8500 Shoal Creek Boulevard P.O. Box 9948 Austin, Texas 78766		10. PROGRAM ELEMENT NO. 1NB458; ROAP 21BJV-034
		11. CONTRACT/GRANT NO. 68-02-1319, Task 12
12. SPONSORING AGENCY NAME AND ADDRESS EPA, Office of Research and Development Industrial Environmental Research Laboratory Research Triangle Park, NC 27711		13. TYPE OF REPORT AND PERIOD COVERED Final; 7/74-9/75
		14. SPONSORING AGENCY CODE
15. SUPPLEMENTARY NOTES		

16. ABSTRACT

The report is a state-of-the-art review of the availability and application of technology for the control of hydrocarbon emissions to the atmosphere from facilities for the production, refining, and marketing of liquid petroleum fuels. The review includes: (1) identification of major hydrocarbon emission sources within the petroleum industry and the quantity of such source emissions, (2) review of existing hydrocarbon emission control technology and the extent of its application by the petroleum industry, and (3) identification of hydrocarbon emission sources within the petroleum industry for which control techniques are neither available nor widely applied.

17. KEY WORDS AND DOCUMENT ANALYSIS

a. DESCRIPTORS	b. IDENTIFIERS/OPEN ENDED TERMS	c. COSATI Field/Group
Air Pollution	Air Pollution Control	13B
Control Equipment	Stationary Sources	14B
Hydrocarbons	Hydrocarbon Emission Control	07C
Petroleum Industry		
Petroleum Refining		13H
Refineries		

18. DISTRIBUTION STATEMENT Unlimited	19. SECURITY CLASS *(This Report)* Unclassified	21. NO. OF PAGES 231
	20. SECURITY CLASS *(This page)* Unclassified	22. PRICE

EPA Form 2220-1 (9-73)