EPA-600/2-75-051
September 1975

Environmental Protection Technology Series

CONCEPTUAL DESIGN OF A COMMERCIAL SCALE PLANT FOR CHEMICAL DESULFURIZATION OF COAL

Industrial Environmental Research Laboratory
Office of Research and Development
U.S. Environmental Protection Agency
Research Triangle Park, N.C. 27711

RESEARCH REPORTING SERIES

Research reports of the Office of Research and Development, U.S. Environmental Protection Agency, have been grouped into five series. These five broad categories were established to facilitate further development and application of environmental technology. Elimination of traditional grouping was consciously planned to foster technology transfer and a maximum interface in related fields. The five series are:

1. Environmental Health Effects Research
2. Environmental Protection Technology
3. Ecological Research
4. Environmental Monitoring
5. Socioeconomic Environmental Studies

This report has been assigned to the ENVIRONMENTAL PROTECTION TECHNOLOGY series. This series describes research performed to develop and demonstrate instrumentation, equipment and methodology to repair or prevent environmental degradation from point and non-point sources of pollution. This work provides the new or improved technology required for the control and treatment of pollution sources to meet environmental quality standards.

EPA REVIEW NOTICE

This report has been reviewed by the U.S. Environmental Protection Agency, and approved for publication. Mention of trade names or commercial products does not constitute endorsement by the Agency or recommendation for use.

This document is available to the public through the National Technical Information Service, Springfield, Virginia 22151.

ERRATA

Page xiv: Figure 31 title should be "Production Rate vs Treating Cost"

Page 74: Section 4.4.2.2 sample amounts are -

E. Powerhouse Coal	1720 gm
Iron Sulfates Standard Solution A	5000 gm

Page 605: Brackets should be included around the ratio difference portions of both the t and t' calculations of Case 1 and the t" calculation of Case 2.

EPA-600/2-75-051

CONCEPTUAL DESIGN OF A COMMERCIAL SCALE PILOT PLANT FOR CHEMICAL DESULFURIZATION OF COAL

by

W. F. Nekervis and E. F. Hensley

Dow Chemical, U.S.A.
Michigan Division
Midland, Michigan 48640

Contract No. 68-02-1302
ROAP No. 21ADD-097
Program Element No. 1AB013

EPA Project Officer: L. Lorenzi, Jr.

Industrial Environmental Research Laboratory
Office of Energy, Minerals, and Industry
Research Triangle Park, NC 27711

Prepared for

U.S. ENVIRONMENTAL PROTECTION AGENCY
Office of Research and Development
Washington, DC 20460

September 1975

ABSTRACT

This report presents a conceptual design and an economic evaluation of a 9070 metric ton per day plant for the chemical removal of pyritic sulfur from coal.

The design is based on removal of 95% of the pyritic sulfur from Lower Kittanning coal. The product coal should meet present air quality regulations for fuel combustion operations as regards total sulfur content.

All supporting facilities are included for a self-sufficient operating complex with purchased water and power. The process engineering is complete through a capital cost estimate. Computer augmented studies are included for the material and energy balances, selection of the reactor systems, monitoring of operating parameters and economic sensitivity studies of process alternatives.

This report was submitted in fulfillment of Contract No. 68-02-1302, by the Contract Projects and Process Engineering Departments, Michigan Division, Dow Chemical U.S.A., under the sponsorship of the Environmental Protection Agency. Work was completed in October 1974.

TABLE OF CONTENTS

	Page
ABSTRACT	iii
LIST OF FIGURES	xiii
LIST OF TABLES	xvi
ACKNOWLEDGEMENTS	xviii
1.0 CONCLUSIONS	1
2.0 RECOMMENDATIONS	3
2.1 Further Development of Present Design	3
2.1.1 Bench Scale and Mini-Plants	3
2.1.2 Pilot Plant	4
2.1.3 Commercial Scale Plant	7
2.2 Research for a "Second Generation" Process	9
2.2.1 Coal Handling and Leaching	9
2.2.2 Extraction and Washing	10
2.3 Economic Factors	10
3.0 INTRODUCTION	13
3.1 Scope and Purpose	14
3.2 Process Description	14

TABLE OF CONTENTS (Contd.)

3.2.1 Reaction Chemistry 14
3.2.2 Chemical Desulfurization 15

3.3 Process Development 16

3.3.1 Prior Development and Design 16
3.3.2 Current Modifications 20
3.3.3 On-Going Development 20
3.3.4 New Areas of Examination 22

3.4 Cost Bases 22

3.5 Project Direction 23

4.0 CONCEPTUAL DESIGN 29

4.1 General Description 29

4.1.1 Design Bases 29
4.1.2 Block Flowsheet 33
4.1.3 Process Description 33

4.1.3.1 Mixing 33
4.1.3.2 Reaction 36
4.1.3.3 Filtration #1 38
4.1.3.4 Extraction 39
4.1.3.5 Filtration #2 40
4.1.3.6 Water Washing 41
4.1.3.7 Filtration #3 42
4.1.3.8 Drying 43
4.1.3.9 Compacting 44

TABLE OF CONTENTS (Contd.)

4.1.3.10 Decantation 44

4.1.3.11 Iron Sulfates Removal 45

4.1.3.12 Distillation 48

4.2 Reactor System Studies 50

4.2.1 Reaction-Regeneration Kinetics 50

4.2.2 Effects of Other Variables 51

4.2.3 Reactor Configurations Studied 52

4.2.3.1 Batch Reactors 52

4.2.3.2 Continuous Reactors with External Regeneration 53

4.2.3.3 Continuous Reactors in Series 54

4.2.3.4 Continuous Reactors in Parallel 55

4.2.4 Reactor Selection 56

4.3 Materials of Construction 63

4.3.1 Leaching and Sulfate Concentration ... 63

4.3.2 Sulfur Extraction and Coal Washing ... 65

4.4 Laboratory Studies 67

4.4.1 Additional Data Needs by Sectors 67

4.4.2 Data from Laboratory Work or the Literature 68

4.4.2.1 Preliminary Data 68

4.4.2.2 Use of Chemical Agents with Coal 74

TABLE OF CONTENTS (Contd.)

4.4.2.3 Separation and Disposal of Excess Iron Sulfates 79

4.4.2.4 Compacting of Fine Coal 85

4.5 Process Design 89

4.5.1 Coal Preparation 89

4.5.2 Mixing 94

4.5.3 Reaction 95

4.5.4 Filtration 97

4.5.5 Extraction 98

4.5.6 Filtration and Decantation 98

4.5.7 Water Washing 101

4.5.8 Filtration and Decantation 102

4.5.9 Drying and Decantation 104

4.5.10 Compacting 105

4.5.11 Product Coal Handling 105

4.5.12 Iron Sulfates Removal 109

4.5.13 Distillation 113

4.5.14 Vent Scrubbing 116

4.6 Material Balance 119

4.7 Energy Balance 119

4.8 Plant Layout 120

4.8.1 Plot Plan 120

4.8.2 Equipment Location 120

4.8.3 Utilities 120

4.8.4 Site Development and General 121

4.8.4.1 Site 121

4.8.4.2 General Facilities 126

TABLE OF CONTENTS (Contd.)

5.0 PROCESS ECONOMICS 127

5.1 Procedure and Bases 127

5.1.1 Capital Cost Estimate and Related Costs 128

5.1.1.1 Capital Cost Estimate 128

5.1.1.2 Capital Related Costs 130

5.1.2 Manpower 132

5.1.3 Unit Ratio Based Costs 138

5.2 Operating Cost Estimate 143

5.2.1 Basic Conceptual Design Costs 143

5.3 Comparison with Other Related Processes 147

5.3.1 Criteria of Performance 147

5.3.2 Closely Related Process Studies 149

6.0 PROCESS ALTERNATIVES AND THEIR ECONOMICS 153

6.1 Base Case, Case 1 155

6.1.1 Case 1 155

6.1.2 Summary 158

6.1.3 Effect of Production Rate 159

6.2 Comprehensive Alternative Cases, Cases 2, 3 and 4 163

TABLE OF CONTENTS (Contd.)

6.2.1 Coal Handling 163
6.2.2 Chemical Processing 167
6.2.3 Combinations and Extensions 171

6.3 Level of Iron Pyrite, Cases 5 to 10 177
6.4 Miscellaneous Cost Effects 185

7.0 CONTINUOUS SIMULATION MODELING PROGRAM 191

7.1 Introduction 191
7.2 Basic Process Examination 193

7.2.1 Simulation Model Assumptions 193
7.2.2 CSMP Output 193
7.2.3 Location of Iron Sulfates Removal Operation 194
7.2.4 Leach Solution Loss in Clean Coal 201
7.2.5 Stoichiometric Variations 202

7.3 Process and Operating Condition Variations 208

7.3.1 Ferric Ion Regeneration in the Mixer . 208
7.3.2 Leaching Rate Constant Variation 216
7.3.3 General Discussion 219

7.3.3.1 Variation of Pyrite Feed to the Process 220
7.3.3.2 Modification of Start-up Conditions 225

7.4 Summary 227
7.5 Conclusions 228

TABLE OF CONTENTS (Contd.)

8.0 REFERENCES 233

9.0 GLOSSARY 239

10.0 APPENDIX 245

10.1 DRAWINGS 245

10.1.1 List of Drawings 245

10.2 EQUIPMENT 246

10.2.1 List of Equipment 246
10.2.2 Equipment Specifications 251

10.3 INSTRUMENTATION 335

10.3.1 List of Instruments 335
10.3.2 Instrument Descriptions and Costs 347

10.4 REACTION SYSTEMS 385

10.4.1 Computer Programs for Reaction Systems 385
10.4.2 Computer Printout for Reaction Systems 403

10.5 MATERIAL & ENERGY BALANCE 437

10.5.1 Stream List and Descriptions 438
10.5.2 Computer Printout for Material and Energy Balance 445
10.5.3 Calculation of Sulfur Forms in the Product Coal 498

TABLE OF CONTENTS (Contd.)

10.6 CAPITAL COSTS 501

10.6.1 Capital Cost Estimate Summary 502

10.6.2 Capital Cost Estimate Details 503

10.7 ECONOMICS 539

10.7.1 Manpower Requirements 540

10.7.2 Computer Printout for Economics Program 551

10.7.3 Chemical Leaching Added to an Existing Coal Plant 559

10.7.4 Calculations for Alternative Cases in Chapter 6 566

10.8 CONTINUOUS SIMULATION MODELING PROGRAM (CSMP) 579

10.8.1 CSMP Listing 579

10.8.2 Conditions of Iron Precipitate Formation 595

10.8.3 Construction of E_h-pH Diagrams for Sulfur Species 599

10.8.4 Calculations of the Effect of Ferric Ion Regeneration in the Mixer 604

List of Figures

No.		Page
1.	Block Flowsheet	34
2.	Mixing	35
3.	Reaction System	37
4.	Filtration #1	38
5.	Extraction of Elemental Sulfur	39
6.	Filtration #2	40
7.	Water Washing	41
8.	Filtration #3	42
9.	Drying	43
10.	Decantation	46
11.	Iron Sulfates Removal	47
12.	Distillation	49
13-29	Process Flowsheets and Plans	
13.	Index Flowsheet	91
14.	Legend	92
15.	Feed Coal Preparation	93
16.	Mixing & Reaction	96
17.	Filtration #1	99
18.	Extraction, Filtration, Decantation	100
19.	Water Washing, Filtration, Decantation	103
20.	Drying & Decantation	106
21.	Compacting	107
22.	Product Coal Handling	108
23.	Iron Sulfates Removal	111
24.	Distillation	114
25.	Vent Collection and Scrubbing	117
26.	Plot Plan	122

27. Floor Plans--1st, 2nd, 3rd Floors 123

28. Floor Plans--4th, 5th, 6th Floors 124

29. Utilities 125

30. Effect of Variations in Price, Direct Fixed Capital, and Production Rate on the Return on Investment of Base Case 146

31. Production Rate vs Treating 162

32. Effect of Basic Coal Price, Coal Handling and Chemical Processing and Return on Total Capital on Product Costs 174

33. Weight Fraction of Original FeS_2 Remaining in the Coal After the Mixer and After the Parallel Reactors 178

34. Chemical Processing Costs for Various Levels of Initial and Residual Pyritic Sulfur Content 184

35. Cost Escalation Factors for Construction 189

36. Price Increase Factors for Bituminous Coal 189

37. Representative Output from CSMP 195

38. Other Representative Output from CSMP 196

39. Ferric Hydroxide Solubility Product Variation with Process Operation Time 198

40. Regions of Process Operation Superimposed on Posnjak and Merwin Ternary Diagram for Fe_2O_3-SO_3-H_2O System 199

41. Ferrous Sulfate Solubility Product Variation with Process Operation Time 200

42. Regions of Process Operation Superimposed on an E_h-pH Diagram for the Sulfur-Water System 204

43. Effect of Different Leach Stoichiometrics on the Flow of Pyrite in Coal 207

44. Effect of Ferric Ion Regeneration in the Mixer on the Rate of Pyrite Flow 209

List of Figures (Contd.)

45. Effect of Ferric Ion Regeneration in the Mixer on Acid Requirements and Amount 210

46. Reactor Effluent Operating Region when Ferric Material Is Regenerated in the Mixer and Superimposed on Posnjak and Merwin Ternary Diagram 211

47. Ferric Hydroxide Solubility Product Variation with Process Operation Time when Ferric Material Is Regenerated in the Mixer 212

48. Pyrite Effluent Flow Rate Variation for Different Process Operating Conditions 218

49. Variation in Flow of Pyrite as the Pyrite Feed to the Process Is Varied Randomly Using a Normal Distribution 221

50. Effect of Changes in Operating Conditions on Flow of Pyrite From the Reactors 224

51. Effect of Step Changes in Pyrite Feed on the Flow of Pyrite from the Reactors 226

52. Effect of Changes in Start-up Conditions on the Flow of Pyrite from the Reactors 226

53. Coal Preparation as an Adjunct to Pyritic Sulfur Removal by Leaching 560

54. Float and Sink Analysis Plot 563

55. Solubility Diagram for the $FeO-Fe_2O_3-SO_3-H_2O$ System at 50°C 598

56. Mixer and Reactor Operating Regions on a Sulfur-Water E_h-pH Stability Diagram 603

List of Tables

No.		Page
1.	Plant Capacity	30
2.	Feed Coal Specification	30
3.	Product Coal Specification	31
4.	Sulfur Forms in Product Coal	32
5.	Batch Reactors	58
6.	Continuous Reactors with External Regeneration	59
7.	Continuous Reactors in Series	60
8.	Continuous Reactors in Parallel, Upflow	62
9.	Size Range of Pulverized Coal Samples	69
10.	Proximate Analysis and Sulfur Forms Analysis of Coal Samples from Company Power House	70
11.	Successive Concentration of Iron Sulfates Filtrate from Leach Step	82
12.	Size Range of Pulverized Coal	90
13.	Capital Cost Estimate Summary	129
14.	Capital-Related Costs Grouped According to Depreciation Period	131
15A.	Manpower Summary	134
15B.	Manpower Cost Summary	136
16.	Detail of Annual Coal Rates	139
17A.	Data for Unit Ratio Based Cost Items, Metric	140
17B.	Data for Unit Ratio Based Cost Items, Conventional	141
18A.	Operating Cost Estimate Summary	144
18B.	Profit Summary at Capacity	145
19.	Summary of Coal Suitability to Meet Standards	151
20.	Base Case, Capital and Operating Costs by Region	157

List of Tables (Contd.)

21. Effect of Production Rate on Treating Cost for Various Sized Plants 161

22. Value and Disposition of By-products from Coal Leaching 170

23. Size and Capital Cost Factors for Various Iron Pyrite Levels 182

24. Operating Cost Changes for Various Iron Pyrite Levels 183

25. Summary of Instrumentation Costs by Sectors 384

26. Summary of Capital Costs by Sector 502

27. Job Listings by Department, Section, and Job Title or Function 540

28. Example Duties of Production Operating Personnel . 544

29. Float and Sink Analysis, Dry Basis 562

ACKNOWLEDGEMENTS

The following firms deserve acknowledgement for their assistance in preparing proposals and estimates of systems and equipment, many of which are incorporated in the plant design:

Link Belt Division, FMC Corporation
Dorr-Oliver Incorporated
Wyssmont Company, Inc.
Heyl & Patterson, Inc.
Vulcan Koppern, Inc.
Dravo Corporation
Astro Metallurgical Corp.
Nooter Corporation
Strong-Scott Mfg. Co.
Eimco Division, Envirotech Corporation
Chemineer, Inc.
Mixing Equipment Co., Inc.

These coal companies kindly provided tours through typical coal mining and preparation facilities:

Consolidation Coal Company
North American Coal Company
Youghiogheny & Ohio Coal Company

The following Dow personnel deserve acknowledgement: (Authorship of major sections is shown in parentheses.)

Dr. R. A. Gaska, Manager of Process Engineering

Mr. F. E. Ford, Manager of Design Services Section, Process Engineering

Dr. D. L. Fear, Process Systems Section, Process Engineering (4.2, 10.4)

Dr. M. R. Bothwell, Maintenance Technology (4.3)

Dr. G. C. Sinke, Associate Scientist, Chemical Engineering Laboratory

Mr. T. H. Wentzler, Computation Research (7.0, 10.8)

Appreciation is expressed to Mr. Lloyd Lorenzi, Jr., of the Environmental Protection Agency for his guidance and support.

Mr. R. W. Cermak (Dow Chemical, retired) deserves special mention. He prepared the preliminary instrument specifications before his retirement, and kindly consented to return as a consultant to prepare the final instrument specifications.

In addition, there are many others who have made valuable contributions. Among these should be mentioned: Mrs. E. A. Nash, layout of appendix enclosures and typing on figures in 4.1 and of tables in 4.2; Mrs. I. H. Carr, proofreading, editing of reference citations and all typing on figures; Mrs. P. J. LeDuc, all other typing; and Mrs. J. G. Smith and Mrs. C. J. Crampton, assembly of draft and final reports.

1.0 CONCLUSIONS

The design in this report (Chapter 4.0) is based on data from bench scale work by TRW, Inc., wherein technical feasibility was reported in EPA-R2-73-173a and 173b, February 1973[1]. The TRW work has been augmented by limited laboratory data obtained by the contractor (Section 4.4), on preliminary recommendations from vendors without actual testing, and on the best engineering judgment available within the time constraints imposed.

The present study indicates potential technological and economic feasibility for a large commercial scale plant contingent on successful completion of projected pilot plant development.

Capital and operating costs per ton of product coal are favorable with respect to other known processes (Section 5.3) for meeting air quality regulations when burning coals of comparable sulfur content. Capital and operating costs would be more favorable if this process were integrated with large, coal-fired, power generating facilities which would already include raw coal handling, crushing and pulverizing, and handling of the pulverized coal (Section 6.3).

2.0 RECOMMENDATIONS

Listed below are recommendations for developmental efforts that would permit more precise definition of the present design (2.1), suggested areas for research that would appear to hold promise in the development of a revised, "second generation" process or in the understanding and refinement of the present process (2.2), and recommendations based on economic factors that could have a significant effect on the process (2.3). Sections of this report having a bearing on the recommendations are cited in parentheses.

Further discussion is given for this subject matter in other sections of the report, viz. 3.3.3 On-Going Development describes a number of contracts where some of this work is already underway and 3.3.4 New Areas of Examination delineates where in the report other discussion is given relating to these recommendations.

2.1 FURTHER DEVELOPMENT OF PRESENT DESIGN

2.1.1 Bench Scale and Mini-Plants

Additional laboratory data should be obtained in the areas listed below in order to improve the quality of output from kinetics and design calculations:

> Iron sulfate solution and solid phase properties and chemistry, e.g., density, viscosity, heat capacity, conditions of precipitate formation, identification of the solid phases (Chapter 4.0, 7.5).

The elimination or depression of elemental sulfur formation in the reaction steps should be studied in continuous pyrite leaching. Sulfur formation is counterproductive and its removal is costly (6.2.2, 7.5).

Technically feasible process steps need to be developed for removal of the proper ratio of ferrous and ferric sulfates and for the recovery of values for sale or for recycling back into the process. Potential values recoverable from the iron sulfates waste stream include iron and alkaline sulfates, iron oxides, extracted sulfuric acid, sulfur dioxide and subsequent products such as sulfuric acid and elemental sulfur. Waste sulfate liquor could be incorporated in a gravity separation step preceding the Chemical Processing sectors to separate very heavy mineral fractions and partially react with alkaline components. The most promising bench scale iron sulfates removal process should be further proved out in continuous bench scale equipment in a mini-plant arrangement (4.4.2.3, 6.2.2, 7.5).

2.1.2 Pilot Plant

Data from continuous operation of a pilot plant are necessary to determine the compositions of the many recycle streams. Optimization of the following items needs to precede the final design of the commercial scale plant.

1. Liquid to solids ratio in the mixing and reaction steps for various pyrite contents in coal.

2. Degree of pyrite conversion attainable in the mixing and post-mixing steps at atmospheric

pressure vs the reaction steps at higher pressure and temperature (4.2, 7.5).

3. The effects and interactions of pyrite feed and product assay with (1) and (2) above and (7), (8) and (10) below, as well as with overall capital and operating cost relationships (6.4, 7.5).

4. Reactor geometry and configurations (4.2.3).

5. Mesh size of coal vs FeS_2 removal efficiency and costs for coal filtration and handling as well as changes in overall control parameters, e.g. time and temperature (4.4.2.1, 7.5).

6. Gravity separation of low carbon content refuse from the ground coal near the mixing step (6.4, 7.5, 10.7.3).

7. Reaction and regeneration parameters (temperature, pressure, concentration) to best take advantage of kinetics (4.2.3, 7.5).

8. Careful definition of the ferric ion and oxygen stoichiometry during the various parts of the leach reaction. Single pass and multi-point oxygen introduction vs pumped recirculation of oxygen in contact with solution (4.4.2.1, 7.5).

9. Safe operating parameters for oxygen in contact with coal fines and with possible solvent carryover.

10. Sulfuric acid control level at the beginning of the reaction process to keep the best stoichiometric balance for the reaction and at the end to prevent precipitation of ferric compounds (4.2, 7.5, 10.4).

11. Determination of desirable start-up conditions necessary to prevent incomplete sulfur removal before process equilibrium is attained (7.5).

12. Type of liquid-solids separation equipment: Settlers, cyclones, centrifuges, or various types of filters -- drum, disc, flat bed or belt (4.5.4).

13. Efficacy of using chemical additives for wetting, settling, filtering and dewatering coal fines and for foam control (4.4).

14. Filter operation: dewatering alone, dewatering and washing, or dewatering, washing and steam purge (4.1).

15. Mass transfer operations: single stage vs multistage solvent extraction and water washing (4.1).

16. Selection of solvent and its operating temperature, e.g. naphtha, toluene or other hydrocarbon or chlorinated hydrocarbon solvents below or above the melting point of sulfur (4.1, 4.4.2.1).

17. Elemental sulfur recovery step: separation of solvent by distillation, filtration or other means (4.1).

18. Feasibility and degree of iron sulfate separation by crystallization and of H_2SO_4 extraction from the iron sulfates waste using acetone or other solvent (4.4.2.3).

19. Definition as well as economic impact of product coal specifications: sulfur forms, ash, moisture, chlorides, and, if pellets are desired, their size, strength, and weatherability (6.2, 6.3, 7.5).

20. Binder selection, e.g. lignin sulfonate, coal tar pitch, styrene - butadiene latex plus clay, and others. Each has advantages (4.4.2.4, 6.4).

21. Energy conservation. Minimum usage of steam, compressed air, process water make-up and electric power (4.7, 4.8.3).

22. Materials of construction, especially with respect to chloride cracking of stainless steels (4.3).

23. Manpower requirements: process, services, administration (5.1.2, 10.7).

24. Solvent losses by reaction or absorption on a variety of coals and by reaction with molten sulfur.

2.1.3 Commercial Scale Plant

Integration of chemical desulfurization of coal with large power generation plants near the coal fields would effect

substantial economies in capital and operating costs as given below (6.3).

1. Existing facilities would be utilized for receiving, storing, handling, grinding, and pulverizing the feed coal.

2. Finished coal drying, compacting, storing, and loading would be minimized. The warm, damp coal from the final filtration could be fed directly to the pulverized coal burners.

3. The steam generation plant would be eliminated. Low pressure steam would be available from the utility at bulk rates.

4. Cooling water requirements for chemical desulfurization would be minor compared to those of the parent power plant.

5. The electrical substation would be eliminated for the desulfurization plant.

6. Administration, maintenance and overhead costs would be minimized due to sharing.

7. Site purchase would be eliminated and site development costs reduced as a developed site would exist.

Lower cost conventional methods of coal preparation should be utilized to their limit on ground coal. Chemical desulfurization should be used to the extent needed to provide

clean fuel and minimize the amount of coal disposed of in the refuse (6.3, 10.7.3). Advantage should be taken of current new technology for drying and shipping coal fines where on-site product use is not possible. This would include pipelining coal slurries and shipment of bulk coal fines in closed hopper cars or in open cars protected with an artificially induced crust for weather protection (4.4.2.4).

2.2 RESEARCH FOR A "SECOND GENERATION" PROCESS

In addition to the above developments, a more basic research program should be conducted to provide fundamental chemistry and engineering data to permit testing and incorporation of new ideas that could lead to changes and improvements outside the scope of the present designs (4.4, 7.5).

2.2.1 Coal Handling and Leaching

The chemistry, kinetics and thermodynamics of leaching and regeneration for high, medium and low levels of iron sulfides in coals of various composition and top size need to be better understood. In addition to those parameters mentioned in the above section, the following need to be studied and optimized: elimination of elemental sulfur formation by control of solution emf and pH, pretreatment of coal with heat or chemicals to minimize reaction time and maximize FeS_2 conversion, nature of any inhibiting or catalytic effect of accumulated impurities or additives, use of supplemental oxidants to assist in the reaction when the FeS_2 is largely depleted, very high pressure leach solution regeneration external to an atmospheric leach system.

2.2.2 Extraction and Washing

If the deposition of elemental sulfur cannot be eliminated from the leach reaction, laboratory work should be performed to determine how the sulfur is physically dispersed in the coal, and a wide variety of solvents and physical conditions should be studied to determine how best to remove the elemental sulfur. During this step it may be feasible to effect some reduction of organic sulfur at minimum extra cost. Also, in the event that the use of chlorinated solvents becomes attractive, the tolerable level of chloride ion in the product needs to be established to assure that the coal product is no more corrosive in use than native coal.

The contribution of wetting agents to facilitate partitioning of solvent, coal, and water should be studied, and agents to further solubilize sulfates during washing should be tried. This might be done in conjunction with the study of supplemental oxidizing agents. Supplemental ferric chloride or ferric nitrate could provide a more soluble ion that would wash out more readily, and post-leach oxidation of the elemental sulfur might eliminate it or make it possible to utilize smaller sulfur recovery equipment.

2.3 ECONOMIC FACTORS

All of the foregoing would need to be judged from a technical and an economic basis. There are a number of factors that are almost purely economic or business related that could have a significant effect on successful advancement of chemical desulfurization. From the studies reported in Chapters 5.0 and 6.0 these are as follows:

1. The level of interest in chemical desulfurization of coal by coal producers, utility plants and others should be determined. Pricing and market considerations for pyrite-free coal need to be clarified apace with the development of desulfurization. The contribution that this technology could make to other sulfur dioxide abatement programs should be explored, e.g. alkaline earth materials could be incorporated in the compacting step to provide feed for a limestone-injection type of boiler.

2. A number of hypothetical installations at existing utility or coal preparation plants should be estimated to determine the costs that would be allocated for the Coal Handling portions of this process by the respective industries (6.2.1).

3. The Chemical Processing portions of this design should be updated by a process engineering group to reflect the latest TRW, Inc., technological developments as applied to various coals amenable to chemical desulfurization (6.2.2).

4. Concurrent with the above three recommendations a business-related study should be made incorporating reliable projections of cost indexes and prices. This study should include a top management perspective for a business having annual sales and an investment in excess of $100 million. It should also include a refined estimate of work assignments, labor costs and optimum design to maximize the number of production days per year that can be reliably used.

3.0 INTRODUCTION

Coal is the largest energy resource available for immediate exploitation in the United States. The annual consumption of coal is expected to triple in the next 30 years. Accompanying this growth will be a depletion of low-sulfur coals and increased need to use high-sulfur coals. Sulfur dioxide from the combustion of sulfur bearing coals is already the largest stationary source contributor to air pollution. The utilization of coal as a readily available energy resource will be blocked unless suitable means for controlling sulfur dioxide can be developed.

Removing the sulfur from coal prior to combustion is potentially the most efficient control method from the standpoint of logistics and materials handling technology. Conventional coal preparation processes utilize crushing, screening and gravity separation to remove shale and pyrites, essentially FeS_2, from coal. Only a relatively small amount of low pyrite coal can be obtained by gravity separation. The bulk of the product has pyrites in the low to middle range, and the high sulfur and ash portion is discharged as refuse. As increasingly strict air quality control specifications are developed and supplies of coals amenable to good cleaning via conventional methods are diminished, it will be necessary to more completely remove pyrites from a larger fraction of the coal treated.

A chemical leach process has been developed by TRW, Inc., and described in report No. EPA-R2-73-173a, February 1973[1], prepared for the Environmental Protection Agency under Contract No. EHSD 71-7.

3.1 SCOPE AND PURPOSE

The Dow Chemical Company was awarded the present contract to utilize the above report, review a number of process flow schemes and variations, develop a conceptual design for a 9070 metric tons (10,000 short tons) of coal product per day process plant (with all supporting facilities) to extract 95% of the pyritic sulfur from a Lower Kittanning coal, submit a detailed cost estimate of the plant capital requirements, and perform economic sensitivity analyses of variations in the process.

This design and these analyses will provide a basis for directing the development of this chemical desulfurization method towards the most cost-effective approach for further pilot operation and commercial scale application.

3.2 PROCESS DESCRIPTION

3.2.1 Reaction Chemistry

The chemistry of the coal depyritization process described in the TRW, Inc., report[1] is defined by the following equations:

LEACH REACTION:

$$FeS_2 + Fe_2(SO_4)_3 \longrightarrow 3\ FeSO_4 + 2\ S \qquad (1)$$

$$FeS_2 + 7\ Fe_2(SO_4)_3 + 8\ H_2O \longrightarrow 15\ FeSO_4 + 8H_2SO_4 \qquad (2)$$

$$FeS_2 + 4.6Fe_2(SO_4)_3 + 4.8H_2O \longrightarrow 10.2FeSO_4 + 4.8H_2SO_4 + 0.8S \qquad (3)$$

ΔH = -55.56 kcal/gm mole (-100,000 Btu/lb mole) FeS_2 reacted

Moles of FeS_2 represented:

Equation (1) 0.40

Equation (2) 0.60

Equation (3) 1.00

REGENERATION:

$$4\ FeSO_4 + 2\ H_2SO_4 + O_2 \longrightarrow 2\ Fe_2(SO_4)_3 + 2\ H_2O \qquad (4)$$

$\Delta H = -74.45$ kcal/gm mole (-134,000 Btu/lb mole) O_2 reacted

EXTRACTION: (5)

$$S \cdot Coal \longrightarrow S + Coal$$

3.2.2 Chemical Desulfurization

The process presented in the TRW, Inc., report[1] is described below.

The ground -149 micron (-100 mesh) coal is wetted with hot recycled aqueous ferric and ferrous sulfate in a mixing tank. The coal slurry is pumped batchwise to one of ten closed reactor vessels and oxygen is introduced. The temperature increases due to the heat of reaction and regeneration, and the system pressure is allowed to increase to above the vapor pressure of the solution. After about eight hours the reactor is drained and the coal is transferred to a settling tank and filtered to remove the aqueous sulfate solution which is evaporated to separate iron sulfate. Most of the sulfate solution is recycled to the mixer and the coal is given a displacement wash and conveyed to the extraction and washing section.

In an agitated extraction vessel the coal is contacted with naphtha to extract elemental sulfur. The coal is filtered and the solvent and aqueous layers separated by decanting.

Sulfur is precipitated from the solvent by cooling and is recovered by filtration. The coal is conveyed to an agitated wash tank, then filtered and fed to a variable pitch screw conveyor for vacuum drying and movement to product storage.

3.3 PROCESS DEVELOPMENT

This report represents one phase of a very complete developmental effort. The sections that follow describe the significant contributions of the prior effort by TRW, Inc., the modifications incorporated in the present design, other concurrent and on-going efforts, and areas which hold promise for still other improvements.

3.3.1 Prior Development and Design

The complete chronology of the development of the ferric sulfate leach process is given in the TRW, Inc., final report for contract EHSD 71-7[1]. A brief summary of the development preceding the TRW process design will be helpful in placing the current Dow Chemical Company conceptual design in the proper perspective in the development sequence.

The ferric ion process for chemical removal of pyritic sulfur from coal (Meyers Process) was demonstrated to be capable of removing essentially all of the pyritic sulfur from samples of four Illinois and Pennsylvania coals representing

major U.S. coal beds. Kinetic equations were developed for extraction of 100 mesh topsize Lower Kittanning coal with 3 to 10 wt% ferric ion at ambient pressures and a slurry reflux temperature of 102°C. Ferric sulfate was chosen over other ferric compounds because of its ease of removal from the treated coal and its reduced corrosion of process equipment. Initial experimentation was conducted with 100 gram coal samples and later work involved approximately 500 gram samples. Leaching temperature, leacher ferric ion to total iron ratio, coal particle top size, and pyrite concentration in the coal were identified as the major parameters affecting pyritic sulfur leaching rate.

Other parameters investigated were: solids to liquid ratio, residence time in each process step, reagent purity, coal weathering, reaction pressure, ferrous ion concentration, oxygen partial pressure, liquid-gas mixing and liquid to gas ratio, and filter washing.

From a computer fit of the extensive data obtained, an equation for the rate of removal of pyrite was generated:

$$-dWp/dt = K_L Wp^2 Y^2 \qquad (6)$$

where K_L = reaction rate constant, a function of temperature and coal particle size, 0.15 when t is in hours

Wp = pyrite concentration, wt. % in coal at time t

Y = ferric ion to total iron ratio at time t. A ratio of Fe^{+3}/Fe close to 1.0 was found to be desirable.

Smooth curves back calculated for -100 mesh Lower Kittanning coal at 102°C indicated that to remove 90% of the pyritic sulfur, leaving the coal with about 1% total sulfur, would require an eight hour leach with continuously renewed ferric sulfate.

It was apparent from the data that improvement in the rate could be obtained by employing higher temperatures and pressures. It was found that the temperature dependence of the reaction rate constant could be expressed as:

$$K_L = A_L \quad \exp(-E_L/RT) \tag{7}$$

where $A_L = 2 \times 10^3 \quad (hr)^{-1} \; (Wp)^{-1}$

$E_L = 7$ kcal/gm mole

The early data on the temperature dependence of reaction rate were scattered and the equation was based on just the two sets of data at 70° and 102°C. Subsequent data for the leaching process at temperatures above 102°C confirmed the constants chosen.

In the second phase of the process, the regeneration of the ferric solution by oxygen, the important parameters in the rate of regeneration were found to be the partial pressure of oxygen and the concentration of ferrous ion, which is in agreement with literature data on the subject. Analysis of the data gave a rate expression:

$$-dF/dt = K_R P F^2 \tag{8}$$

where $K_R = A_R \exp(-E_R/RT)$, $(40.2 \times 10^6)\exp(-13{,}200/RT)$
$= 1.836$ liter/(gm mole)(atm)(hr) at 120°C

$A_R = 6.7 \times 10^5$ liter/(gm mole)(atm)(min)

$E_R = 13.2$ kcal/gm mole

F = concentration of ferrous iron, gm mole/liter

P = oxygen partial pressure, atm

These expressions were found valid as long as sufficient agitation was provided to prevent liquid-gas separation. Low flow rates gave reaction rates much lower than the high agitation runs.

Comparison of the rates of the leaching and regeneration reactions indicated that regeneration is faster, so that a reactor with simultaneous leaching and regeneration looked favorable. Limited experience showed 84% pyrite removal in a 2-hour extraction of -100 mesh Lower Kittanning coal at 130°C, with simultaneous regeneration of ferric ion by oxygen. Further work is in progress.

A conceptual process design was prepared by TRW based on 100 short tons of coal feed (dry basis) per hour. The coal was assumed to have 3.2% pyritic sulfur and to consume a negligible amount of ferric ion in oxidative ion reactions. A number of alternative processing methods and parameters were tested on preliminary engineering designs and various economic trade-offs were taken into consideration. A process baseline design was developed and a process flow diagram and material balance presented. A brief description of the process steps and equipment was given. A capital estimate was made for the major process equipment, and the process costs were estimated.

3.3.2 Current Modifications

This report presents a complete process engineering design. The TRW report[1] may be consulted for details of the earlier conceptual design. At the beginning of the present project the TRW design was carefully evaluated. The final Dow design contains a number of deletions, additions and modifications that were based on judgment, practicality and laboratory tests that evolved as the design progressed. In addition, there were modifications in materials of construction and auxiliary equipment and a more complete definition of operating conditions, material and energy balance, manpower, and all pertinent design considerations.

3.3.3 On-Going Development

The Control Systems Laboratory of the Environmental Protection Agency has sponsored the following developmental efforts by TRW, Inc., pertaining to the chemical leach process:

Contract 68-02-0647, "Applicability of the Meyers Process for Chemical Desulfurization of Coal: Initial Survey of Fifteen Coals,"[2]. Final report issued April 1974.

Demonstration of the applicability of the Meyers process on at least thirty five samples of coal selected to meet stated criteria. Careful analytical results obtained for unprocessed coal and coal subjected to chemical desulfurization and to float and sink testing.

Contract 68-02-1336, "Bench Scale Development of Processes for the Chemical Extraction of Pyritic Sulfur from Coal"[3] In progress.

A follow-on to contract EHSD 71-7[1]. Optimization of leaching and regeneration techniques. Study of methods for removal of spent leach solution and sulfur from processed coal. Evaluations of nonroutine analytical procedures. Additional bench scale experimentation of pyritic sulfur removal from larger top-size coals and coals that have been subjected to various forms of pretreatment.

Contract 68-02-1335, "Pilot Plant Design of a Pyritic Sulfur Removal Process"[4]. Final report in preparation.

Design of a one-half ton per hour pilot-scale unit for batch and continuous flow capable of total removal of pyritic sulfur from coal. Preliminary process engineering design will include flow diagrams, mass and energy balances, and the specification of operating conditions, major equipment, controls, utilities, and construction materials. These will be used to develop a detailed process design for the pilot plant with a capital cost estimate and a scale model of the process. A pilot plant test program will be developed.

Modification and incorporation of pertinent technology from all of the foregoing contracts would be applied to the building and operating of any such pilot plant to demonstrate, in continuous operation, the equipment and procedure needs for scale-up to a commercial sized plant.

In addition to the above EPA funded programs, TRW, Inc., has initiated an internal business development project to assess the financial investment opportunities of the chemical desulfurization process. This includes the following areas of interest:

-- Low sulfur steam coal production
-- Low sulfur coking coal production
-- Feed for coal liquefaction

Additionally, the EPA has performed in-house studies to corroborate and extend the above findings.

3.3.4 New Areas of Examination

During the course of the engineering development of the conceptual design a number of questions presented themselves suggesting alternatives that were outside the scope of this contract. Those that are closely allied to the engineering and pilot plant design are mentioned in Chapter 4.0, Conceptual Design, in the sections to which they would have application. Others that might have a different or less well-defined application are described in Section 4.4, Laboratory Studies. Technological or business alternatives that could be expected to have a considerable economic impact were incorporated in Chapter 6.0, Process Alternatives and Their Economics. Chapter 7.0, Continuous Simulation Monitoring Program, takes a close look at the process start-up, chemistry and kinetics, and points out areas where improvements can likely be made in further developing the present design and in research for a "second generation" process.

3.4 COST BASES

Detailed cost bases are given in chapter 5.0, Process Economics. The base case economics were calculated for the following conditions:

Location and site

- Pennsylvania-West Virginia area
- Major river valley
- Major branch of a coal hauling railroad
- Site relatively level and suited to construction

Overall plant description

- Turnkey installation
- Self-sufficient; purchased power and water
- Receive raw Lower Kittanning coal in rail cars
- Specify coal storage, reclaim, and grinding facilities
- Pass all coal through chemical desulfurization process
- Remove 95% of the pyritic sulfur
- Supply 9070 metric tons per day of 95% pyrite-free coal ready for transport
- Supply 95% pyrite-free coal for steam generation
- Provide for removal of by-products and wastes

Economics

- 1975 costs and wages (1973 dollars)
- Capital costs built up on an installed equipment basis
- The operating costs include depreciation
- Profit calculated as return on total investment

3.5 PROJECT DIRECTION

The major effort in the technical program was the development of a viable conceptual design by the Process Engineering Department. Accompanying this were various studies by

research and economics personnel. Development of a computer program to analyze process operation and analysis of the economic sensitivity of the process followed the conceptual design.

Initial work included:

a) familiarization and extensive review of process flow schemes and work by TRW, Inc., under Contract No. EHSD 71-7[1],

b) initial process design by Process Engineering of the TRW conceptual design with appropriate modifications to improve technical and economic feasibility,

c) evaluation of TRW laboratory and bench scale work by Dow R&D personnel with suggestions as to areas where further research data would be most helpful in establishing conditions to be used as a basis for alternative process design proposals to be developed and compared with the Process Engineering process design above,

d) augmentation of the Process Engineering process design with appropriate published or proprietary data,

e) selection and development of economic evaluation measures to be used in the program,

f) optimization of the most feasible designs with preliminary capital and operating costs developed as necessary for decisions.

Follow-up work included:

a) recommendation to the EPA Project Officer of a process based on the above analyses,

b) approval by the Project Officer of the recommended process with some redefinition of the bases,

c) preparation of the detailed Process Engineering conceptual design described in Chapters 4.0, 5.0 and the Appendix. This was the major design effort and included the following:

- -- refinement of reaction-regeneration mathematical models to confirm reactor configuration selection and to provide materials balance data for the larger, overall computer program that subsequently provided material and energy balance data for the entire process,

- -- development of specifications for all major equipment and for instruments,

- -- layout for reactor trains and plant complex, plans for each level of process equipment structure,

- -- revision of the index flowsheet initially developed to include updated material balance and materials of construction designation,

-- communication with equipment suppliers regarding their replies to inquiries on major equipment items with specifications,

-- completion of process flowsheet for operations relating to each major step in the process,

-- estimation of capital cost on a unit operations basis,

-- detailing of manpower, maintenance, and utility requirements,

d) limited investigations by research personnel were made into the areas of:

-- wetting and settling of coal in water and in aqueous iron sulfate solutions,

-- separation of coal, solvent, and aqueous iron sulfate solutions,

-- process steps required to concentrate ferrous and ferric sulfate solutions and properties of resulting mixtures,

-- published ternary phase diagram for Fe_2O_3-SO_3-H_2O,

-- published phase diagram for Cu-Fe-S-H_2O showing influence of emf and pH,

-- published data on elemental sulfur extraction from volcanic ores,

e) establishment of economics bases and assumptions, and development of a cost and capital estimate for the base conceptual design.

Supporting work included:

a) developing a Continuous Simulation Monitoring Program (CSMP) for use in analyzing possible ways of varying and controlling the various parameters in the leaching and regeneration steps,

b) reviewing various changes in parameters, coal properties, equipment and process alternatives that appeared to have economic significance, and making adjustments in the base case capital and cost factors for these so that an economic sensitivity analysis could be made,

c) economic comparison with the base case of technical alternatives and business options to determine the sensitivity of the design to such factors.

4.0 CONCEPTUAL DESIGN

The conceptual design presented in this report is based on data from bench scale work by TRW, Inc., reported in EPA-R2-73-173a and 173b, February 1973[1], augmented by limited laboratory data by The Dow Chemical Company, on preliminary recommendations and quotations by vendors without benefit of actual testing, and on the best engineering judgment available within time, manpower, and budgetary constraints. Although the design and selections are preliminary in nature, they provide a reasonable basis for economic evaluation.

4.1 GENERAL DESCRIPTION

The conceptual design which follows is a complete "grass roots" complex having four identical chemical process units for chemical desulfurization of coal, facilities for handling and preparing the feed coal to the process units, handling the processed coal from the process units, an oxygen-nitrogen plant, raw material receipt and storage, and all utility and supporting facilities except power and water which are assumed to be purchased from a utility company or a municipality.

4.1.1 Design Bases

The bases used for plant location, site and overall plant description as well as economics are listed in Sections 3.4 and 5.1. Some of these are restated and other bases for the engineering design are given in Tables 1-4. Table 1 lists the daily plant capacity and an annual capacity assuming

331 operating days per year or operation about 90% of the time. The feed coal specification is listed several ways in Table 2. The coal analyses chosen were derived from the TRW, Inc., report[1]. The product coal specification in Table 3 was developed assuming 95% FeS_2 removal and a moisture content attainable by modern drying methods. Table 4 shows, by source, the amount of sulfur remaining in the product coal as a percent of the coal leaving the dryer, dry basis, from Section 10.5.3.

Table 1. PLANT CAPACITY

Daily Capacity, metric tons product coal*, dry basis	9,070
Equivalent operating days per year	331
Annual Capacity, metric tons product coal*, dry basis	3,000,000

*excluding product coal used for steam generation

Table 2. FEED COAL SPECIFICATION

Lower Kittanning Coal, 200 mm (8") topsize

Proximate Analysis:	%
Fixed Carbon	58.54
Volatile	20.69
Ash	20.77
TOTAL	100.00
Heating Value, Cal/gm	6,745 ±44
Heating Value, Btu/lb	12,140 ±80
Moisture, assumed	10%

Rank: Medium Volatile Bituminous

Table 2 (contd.). FEED COAL SPECIFICATION

Sulfur Forms:	%
Pyritic	3.58
Sulfate (Treat as Inert Solid)	0.04
Organic (Treat as Inert Solid)	0.67
TOTAL	4.29

Pyrite Content:

$$(3.58\%\ S) \times (55.847 + 32.06 \times 2)/(2 \times 32.06) = 6.7\%\ FeS_2$$

Composition:	%
Coal (Excluding FeS_2)	93.3
Pyrites (as FeS_2)	6.7
TOTAL (Dry Basis)	100.0
Moisture (Assumed)	10.0
TOTAL	110.0

Table 3. PRODUCT COAL SPECIFICATION

Composition:	%
Coal (Excluding FeS_2)	99.64
Pyrites (as FeS_2)*	0.36
TOTAL (Dry Basis)	100.00
Moisture	4.00
TOTAL	104.00

Size:

Compacted to 13 to 38 mm (1/2" to 1-1/2") lumps with minimum of fines.

*Further detail of pyrites removed is given on the next page.

Table 3 (contd.). PRODUCT COAL SPECIFICATION

Detail of Pyrites Removed:

	Parts by Weight	
Composition:	Feed	Product
Coal	100.00	100.00
FeS_2	7.18	0.36
TOTAL	107.18	100.36

$(7.18 - 0.36)/7.18 = 95\%$ FeS_2 Removed

Table 4. SULFUR FORMS IN PRODUCT COAL

Sulfur Form	% in Product
Unchanged Sulfur from Feed Coal Source:	
Organic	0.714
Sulfate	0.043
Sulfur or Compounds Left after Reactions and Washing:	
Iron Pyrites	0.185
Elemental Sulfur	0.027
Ferrous Sulfate	0.005
Ferric Sulfate	0.029
Sulfuric Acid	0.009
Subtotal from feed or reactions	1.012
Sulfur Compounds Added as Binder:	
Lignin Sulfonate	0.075
TOTAL based on dry process coal	1.087

4.1.2 Block Flowsheet

Figure 1 shows the overall process from receipt of raw feed coal through to product coal including by-product sulfur and sulfates waste. With the exception of raw and product coal handling, which do not involve chemical processing, each step is described below.

4.1.3 Process Description

The various process steps are described in detail in the following sub-paragraphs with appropriate figures.

4.1.3.1 Mixing - Coal containing 6.7% of FeS_2 (dry basis) pulverized to -149 micron, U.S. Sieve Series, (-100 mesh, Tyler Standard Sieve Scale Series) is fed to an agitated mixing vessel operating at atmospheric pressure and having a 1 hour residence time. Leach solution (2.5% (by weight) ferrous sulfate, 13.3% ferric sulfate, 0.8% sulfuric acid, and 83.4% water), returned at 98°C from subsequent process steps, is fed to the mixing vessel in the ratio of 2 tons of leach solution per ton of coal. Of the original FeS_2, 14% is converted to ferrous sulfate and elemental sulfur. See Figure 2.

The solids from mixing are now 94% (by weight) coal, 5.8% FeS_2 and 0.2% elemental sulfur. The leach solution is now 7.5% ferrous sulfate, 6.2% ferric sulfate, 2.3% sulfuric acid, 84% water. A side stream amounting to 31% of the slurry is fed to the iron sulfate removal step and 64% of this is subsequently returned from the iron sulfates removal sector described later. By-product steam from iron sulfates removal is used to maintain 102°C effluent temperature. Sulfuric acid, 98% is added to the mixer to make up for acid which is lost in the iron sulfates waste.

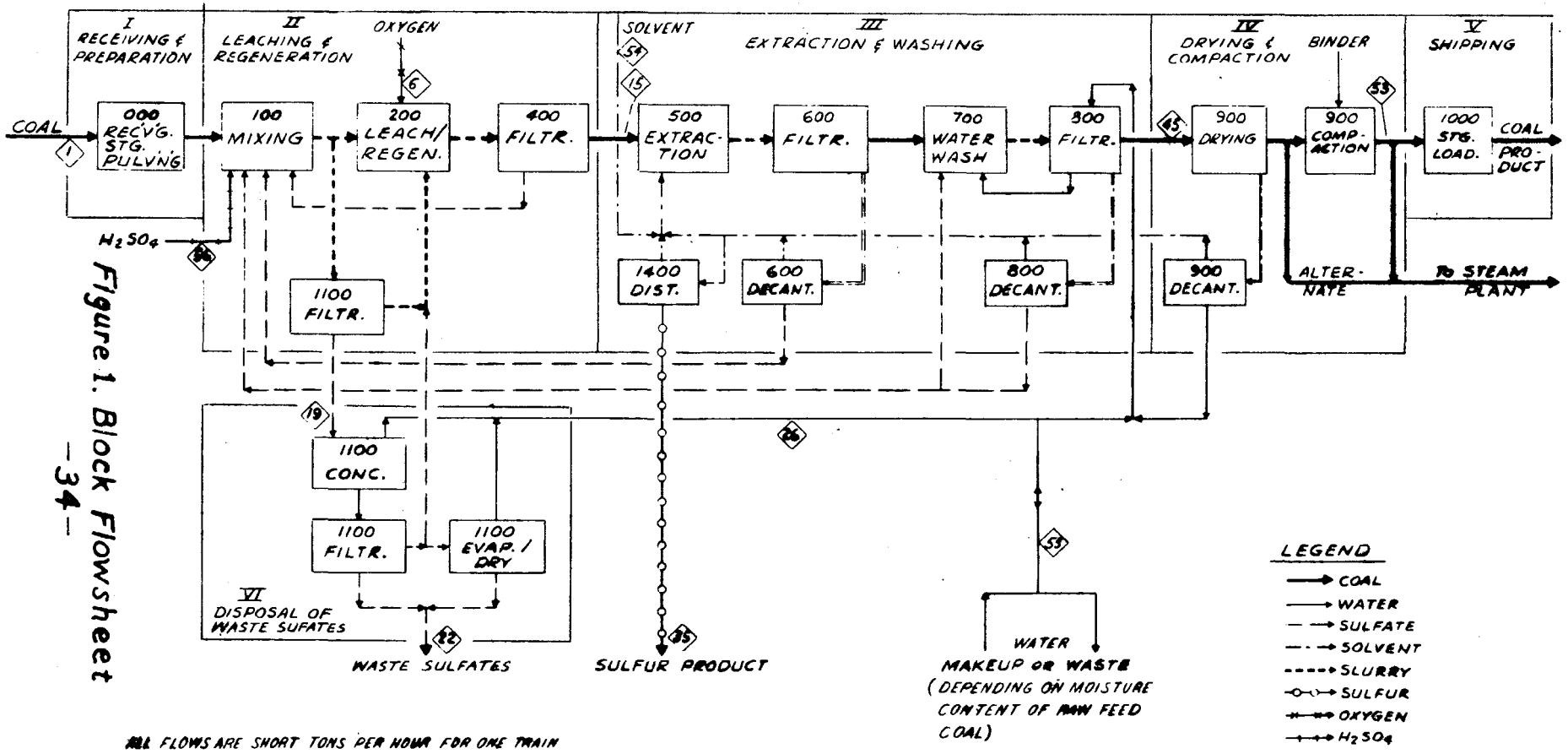

Figure 1. Block Flowsheet

ALL FLOWS ARE SHORT TONS PER HOUR FOR ONE TRAIN

1	6	15	19	22	56	54	35	STREAM NO.	26	45	53	55		
GROUND COAL	OXYGEN	LEACHED COAL	IRON SULFATES LIQUOR	IRON SULFATE WASTE	SULFURIC ACID	SOLVENT	SULFUR PRODUCT	STREAM NAME	STEAM	WASHED COAL	DRIED & COMPACT COAL	WATER (WASTE)	FUEL COAL	PRODUCT COAL
113.50		113.50						COAL		113.50	113.50		9.30	104.2
8.15		0.40						FeS_2		0.40	0.40		0.03	0.37
		1.66					1.63	SULFUR		0.03	0.03		Neg.	0.03
		0.63	6.09	6.01				$FeSO_4$		0.03	0.03		Neg.	0.03
		3.28	5.03	4.58				$Fe_2(SO_4)_3$		0.14	0.14		0.01	0.13
		0.20	1.88	1.57	1.66			H_2SO_4	0.13	0.03	0.03	-0.01	Neg.	0.03
12.20		19.01	68.35	3.59	0.03			H_2O	49.82	22.78	4.56	-3.85	0.37	4.19
						0.12		SOLVENT		1.30				
	4.95							OXYGEN						
	0.03							INERT						
								BINDER			1.71		0.14	1.57
133.85	4.98	138.68	81.35	15.75	1.69	0.12	1.63	TOTAL	49.95	138.21	120.40	-3.86	9.85	110.55

JN 730623

COAL - PYRITIC SULFUR REMOVAL

BLOCK FLOWSHEET

BY E. F. HENSLEY EFH 10-2-74 WSM

5-21-75

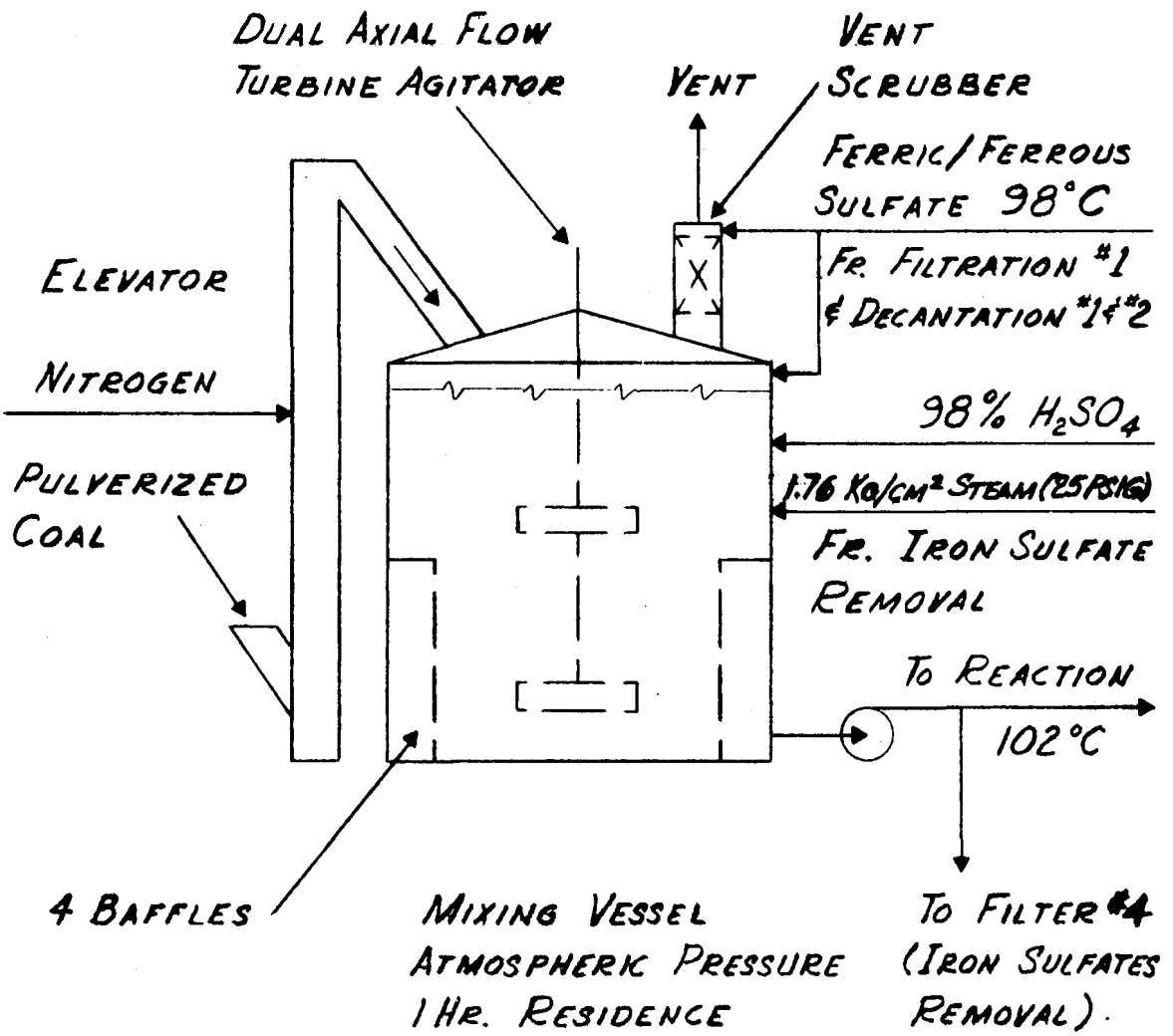

Figure 2. Mixing

4.1.3.2 Reaction - The slurry from mixing and iron sulfates removal is composed of 34% solids and 66% liquid. The solids are 94% coal, 5.8% FeS_2 and 0.2% elemental sulfur. The liquid composition is 6.4% ferrous sulfate, 5.5% ferric sulfate, 2.8% sulfuric acid and 85.2% water. This slurry is fed to reactors in parallel, each having 10 hours of residence time. See Figure 3.

Oxygen, 99.5% (by volume), is fed to each reactor through two spargers near the bottom of the reactors. The reactors operate at 5.6 kg/cm^2 (80 psia) in the vapor space at the top, plus 2.5 kg/cm^2 (36 psi) hydrostatic head. Exothermic heat of reaction raises the temperature of the reactor effluent to 152°C. The effluent is composed of 32% solids and 68% liquids. The effluent solids are made up of 98.23% coal, 0.34% FeS_2 and 1.43% elemental sulfur. The liquid is 2.6% ferrous sulfate, 14.2% ferric sulfate, 0.9% sulfuric acid and 82.2% water. The reactor effluent is cooled to 102°C.

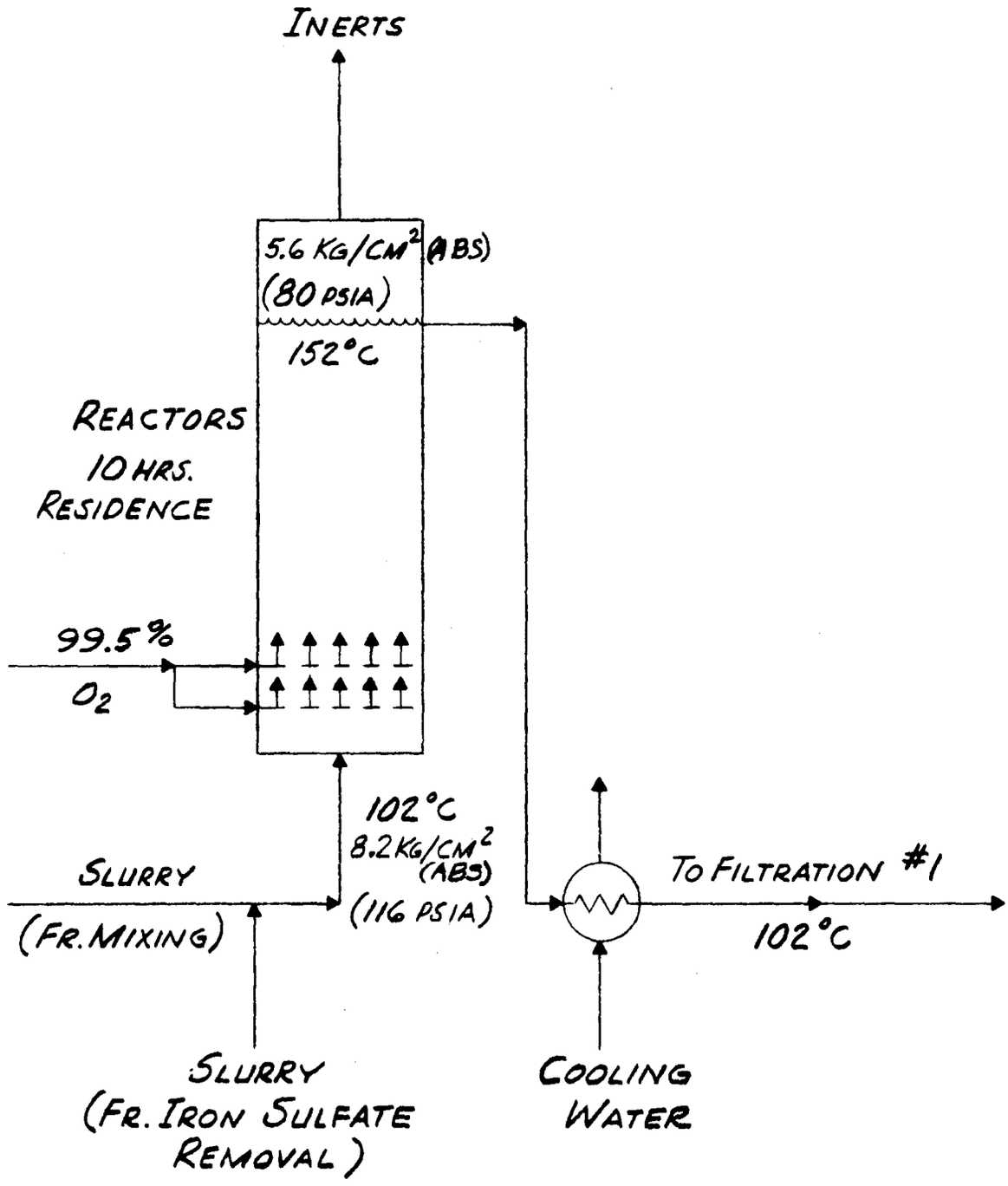

Figure 3. Reaction System

4.1.3.3 Filtration #1 - Slurry from the reaction, cooled to 102°C, is fed to rotary drum filters. Composition of the filter cake is 81.85% coal, 0.29% FeS_2, 1.20% elemental sulfur, 0.45% ferrous sulfate, 2.36% ferric sulfate, 0.15% sulfuric acid and 13.71% water. Composition of the filtrate is 2.7% ferrous sulfate, 14.2% ferric sulfate, 0.9% sulfuric acid and 82.2% water. Filtrate is returned to mixing. Filter cake is fed to the extractor. See Figure 4.

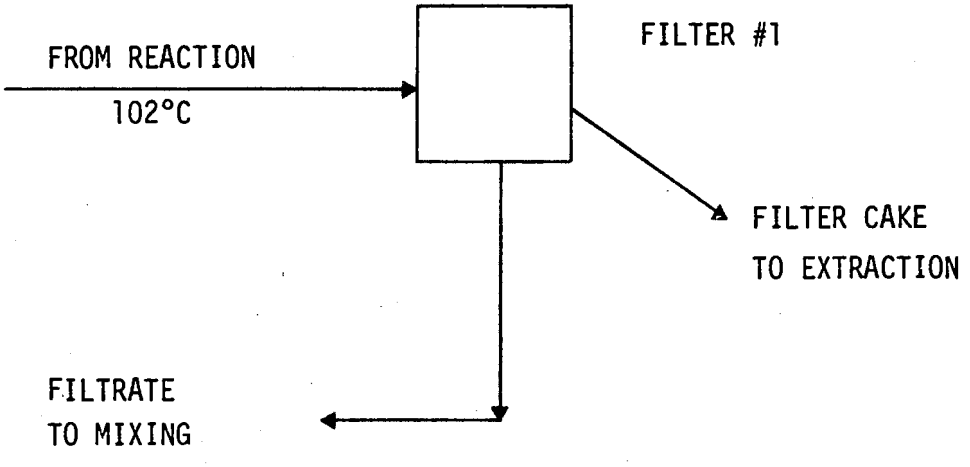

Figure 4. Filtration #1

4.1.3.4 Extraction - Filter cake from filtration #1 and solvent from distillation are fed to an agitated extraction vessel having 30 minutes residence time. The liquid to solids ratio is 1.44 by weight or 2.9 by volume. The composition of the solvent is 98.8% naphtha and 1.2% sulfur. Slurry leaving the extractor is 40.9% (by weight) solids, 8.3% aqueous solution and 50.8% organic liquids. See Figure 5.

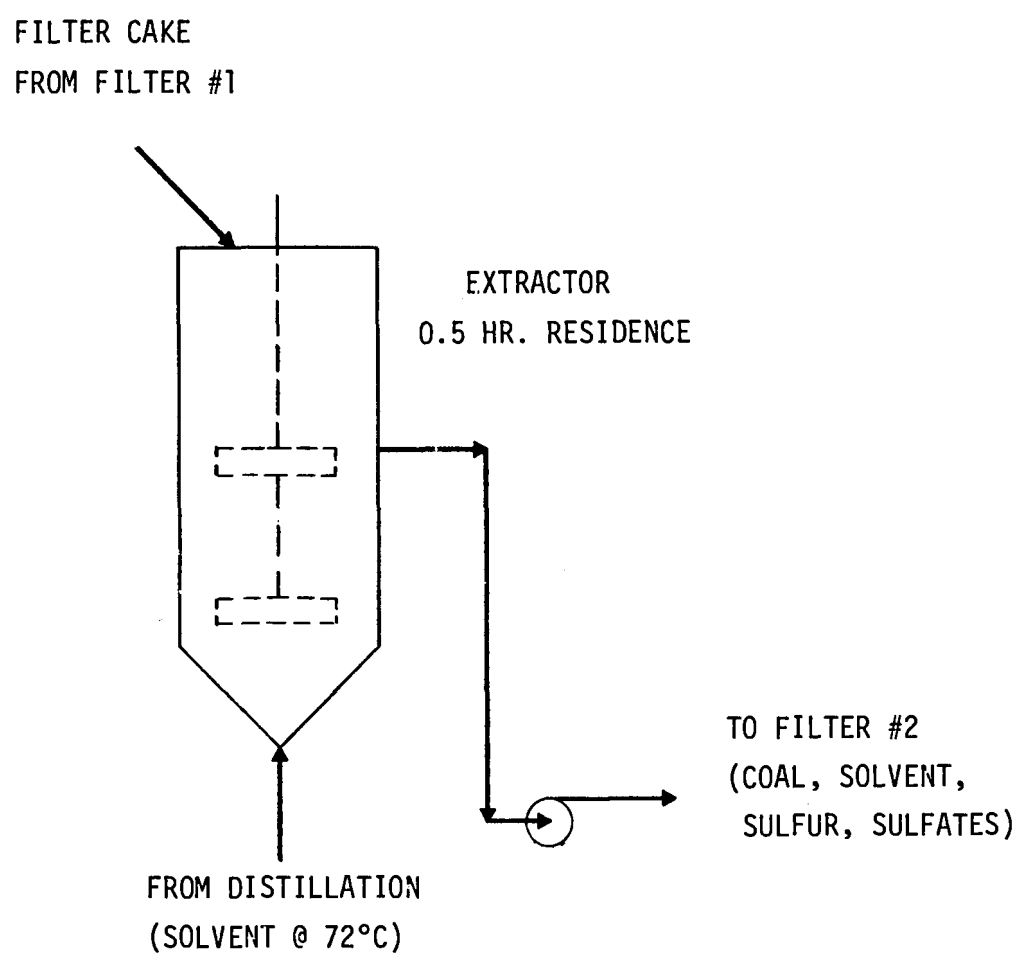

Figure 5. Extraction of Elemental Sulfur

4.1.3.5 Filtration #2 - Slurry from the extraction is pumped to rotary drum filters. The filter cake composition is 83.04% (by weight) coal, 0.29% FeS_2, 0.34% sulfur, 0.06% ferrous sulfate, 0.33% ferric sulfate, 0.02% sulfuric acid, 1.92% water and 14% solvent. The filtrate is 86% organic and 14% aqueous liquid. The organic portion is 2.34% sulfur, 97.66% naphtha. The aqueous solution is 2.7% ferrous sulfate, 14.2% ferric sulfate, 0.9% sulfuric acid and 82.2% water. See Figure 6.

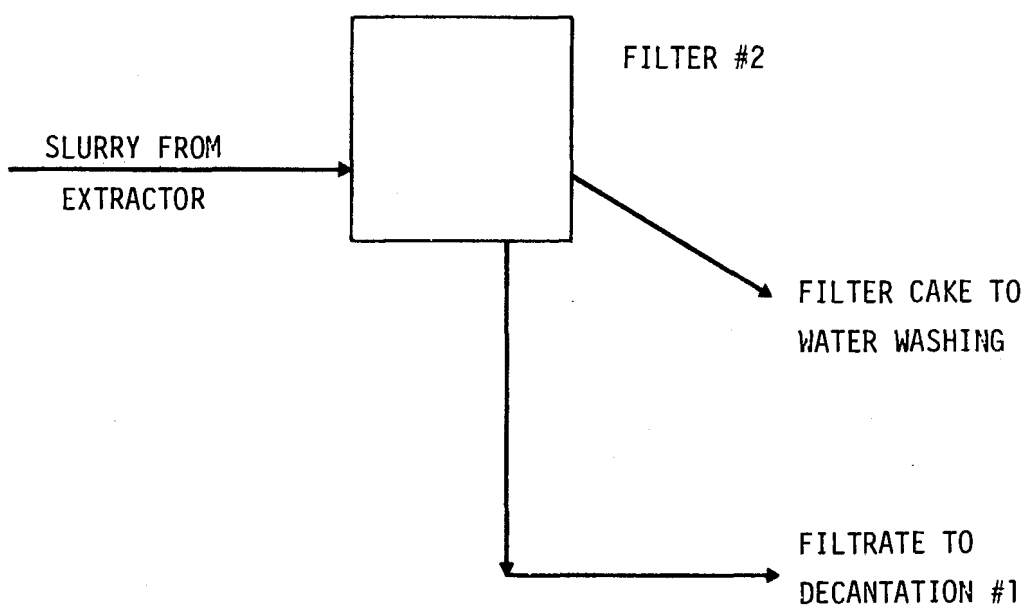

Figure 6. Filtration #2

4.1.3.6 Water Washing - Filter cake from filtration #2 is fed to an agitated water wash vessel having 50 minutes of residence time. Here the residual organics (naphtha and sulfur) are displaced with wash water from filtration #3 and decantation. The wash water composition is 0.04% dissolved sulfur, 1.60% naphtha, 0.25% ferrous sulfate, 1.31% ferric sulfate, 0.36% sulfuric acid and 96.44% water.

The slurry from water washing is composed of 41.04% coal, 0.14% FeS_2, 0.19% sulfur, 0.16% ferrous sulfate, 0.83% ferric sulfate, 0.19% sulfuric acid, 49.73% water and 7.72% naphtha. See Figure 7.

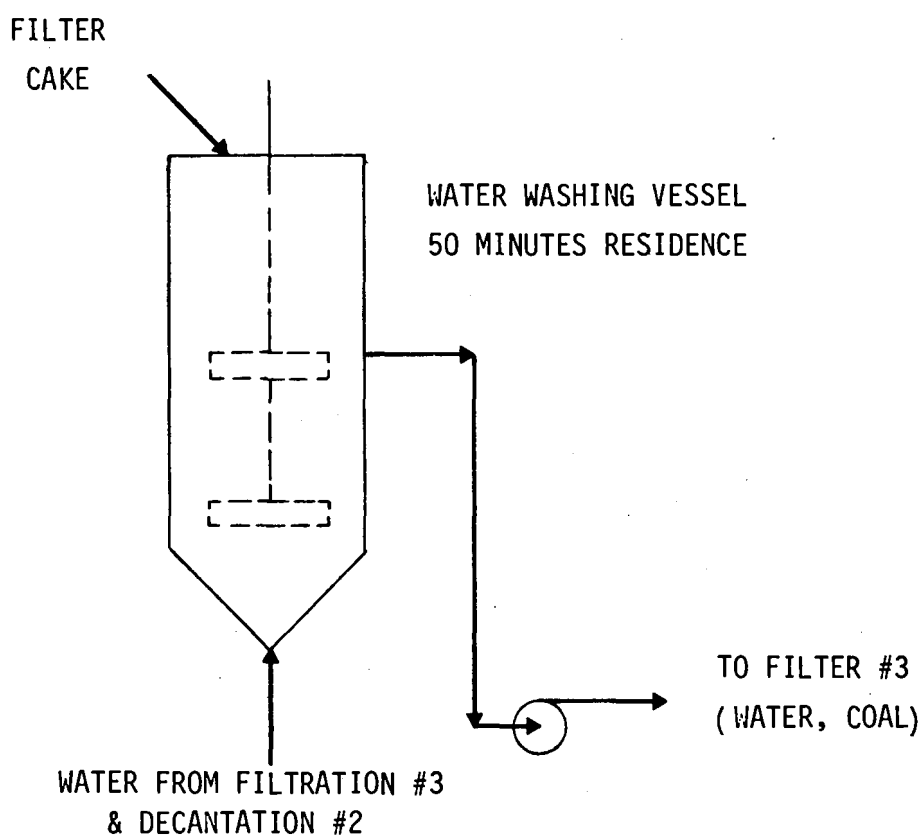

Figure 7. Water Washing

4.1.3.7 Filtration #3 - The slurry from water washing goes to rotary drum filters. The filter cake is washed, after dewatering, with hot water recovered from the sulfate waste process step. The filter cake, after washing, is composed of 82.13% coal, 0.29% FeS_2, 0.02% sulfur, 0.02% ferrous sulfate, 0.10% ferric sulfate, 0.02% sulfuric acid, 16.48% water and 0.94% naphtha. Filtrate is composed of 0.32% sulfur, 13.13% naphtha, 0.27% ferrous sulfate, 1.40% ferric sulfate, 0.33% sulfuric acid and 84.55% water. Wash water from the filters is composed of 0.13% sulfur, 0.11% ferrous sulfate, 0.57% ferric sulfate, 0.32% sulfuric acid, 93.52% water and 5.35% naphtha. This wash water is returned to the water wash vessel. See Figure 8.

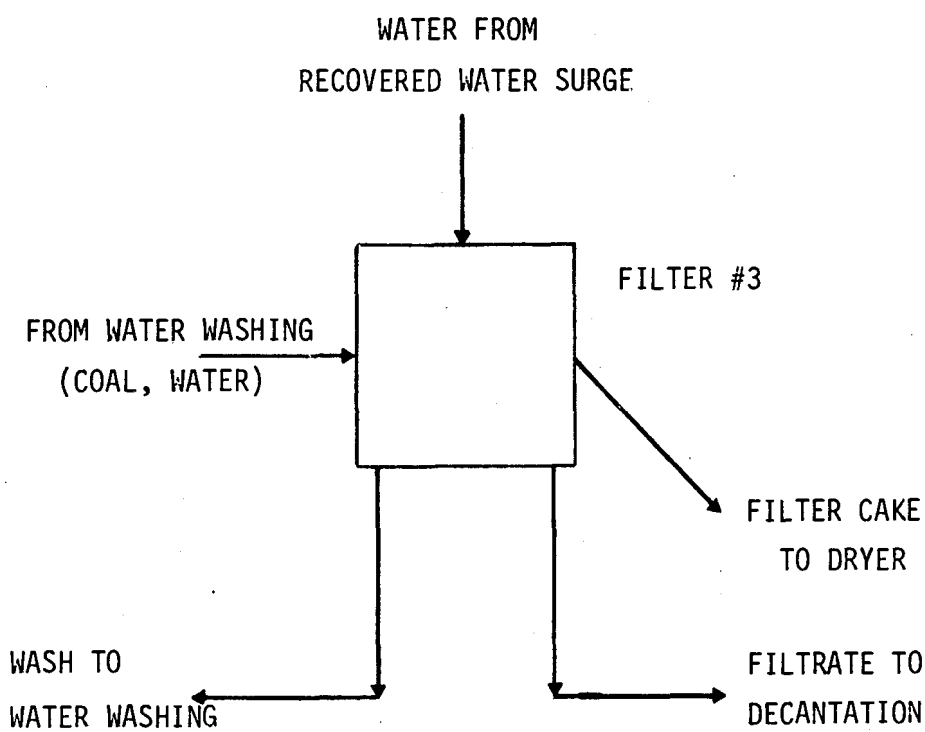

Figure 8. Filtration #3

4.1.3.8 Drying - The washed filter cake from filtration #3 is fed to shelf type dryers with solvent recovery facilities. Drying takes place in a nitrogen-rich atmosphere with oxygen sensors to ensure against fire or explosion. Condensed solvent and water go to decantation. The dried coal has a composition of 95.63% coal, 0.33% FeS_2, 0.03% sulfur, 0.02% ferrous sulfate, 0.12% ferric sulfate, 0.03% sulfuric acid and 3.84% water. See Figure 9.

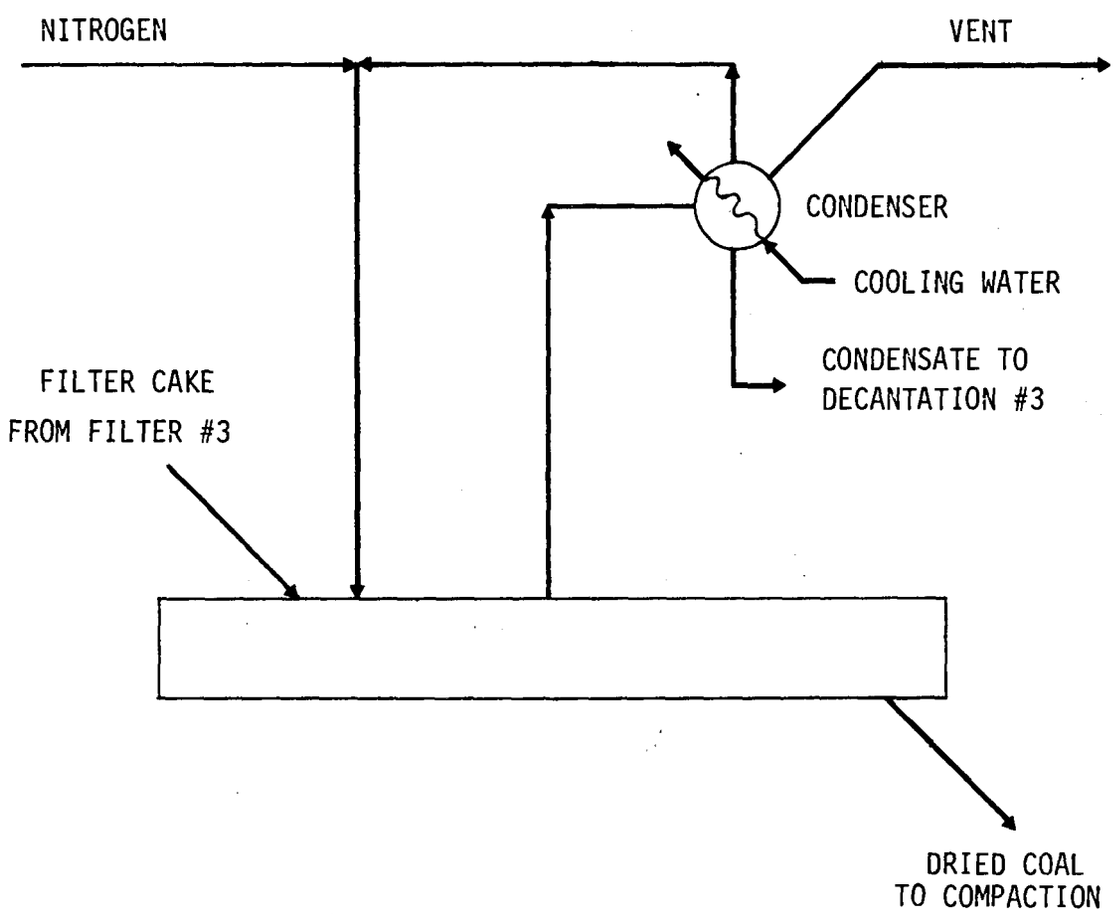

Figure 9. Drying

4.1.3.9 Compacting - Dried coal containing 0.33% FeS_2, less than 5% of the pyritic sulfur in the feed coal, is fed to disk-type pelletizers. Lignin sulfonate, 50% solution, has been tentatively selected as the binder for pelletizing. One and one half pounds of binder, dry basis, is required per hundred pounds of coal. Lignin sulfonate has a sulfur content of approximately five percent, which adds a negligible amount of sulfur to the finished coal.

Another binder recommended by the pelletizer manufacturer is coal tar pitch. Seven pounds of coal tar pitch are required per hundred pounds of coal. Dry coal tar pitch requires costly grinding and blending equipment. Coal tar pitch emulsion can be used, but a 25% by weight emulsion is required which would add moisture to the finished coal.

Coal tar pitch binder, added either dry or as an emulsion, would add an appreciable amount of sulfur to the finished coal.

The use of styrene-butadiene latex as a binder is discussed in Section 4.4.

4.1.3.10 Decantation - Filtrate from filter #2, filtrate from filter #3, and condensate from drying go to decanters #1, #2, and #3 respectively. The organic layers from all decanters go to the distillation step and are composed of 2.34% sulfur and 97.66% naphtha. All of the aqueous layer from decanter #1 is returned to mixing and has a composition of 2.7% ferrous sulfate, 14.2% ferric sulfate, 0.9% sulfuric acid and 82.2% water. A portion amounting to 16.5% of the aqueous layer of decanter #2 is returned to mixing and 83.5%

is forwarded to water washing. The composition of this aqueous layer is 0.31% ferrous sulfate, 1.62% ferric sulfate, 0.38% sulfuric acid and 97.69% water. The aqueous layer from decanter #3 is 100% water and goes to the recovered water surge tank. See Figure 10.

4.1.3.11 Iron Sulfates Removal - A stream comprising 31% of the slurry from mixing is fed to filter #4, a rotary drum vacuum filter. The filter cake is discharged into an agitated reslurry tank and returned to the reaction system. The filtrate is evaporated, cooled and forwarded to filter #5. The filter cake from filter #5 is rich in ferrous sulfate, and has a composition of 64.96% ferrous sulfate, 6.42% ferric sulfate, 4.48% sulfuric acid and 24.14% water. Ten percent of the filtrate from filter #5 is returned to the reslurry tank; 90% is evaporated to essential dryness and is rich in ferric sulfate. Its composition is 9.91% ferrous sulfate, 52.97% ferric sulfate, 15.75% sulfuric acid and 21.37% water. This process design permits varying the ferrous/ferric sulfate ratio and the quantity of iron sulfates removed to keep the whole system in the proper balance.

By-product steam from the evaporator is used to maintain proper temperature in the mixing vessel and in the reslurry tank. The surplus steam is condensed. Part of the condensate is used to replenish the liquid in the reslurry tank and the remainder goes to the recovered water surge tank for wash water for filter #3. See Figure 11.

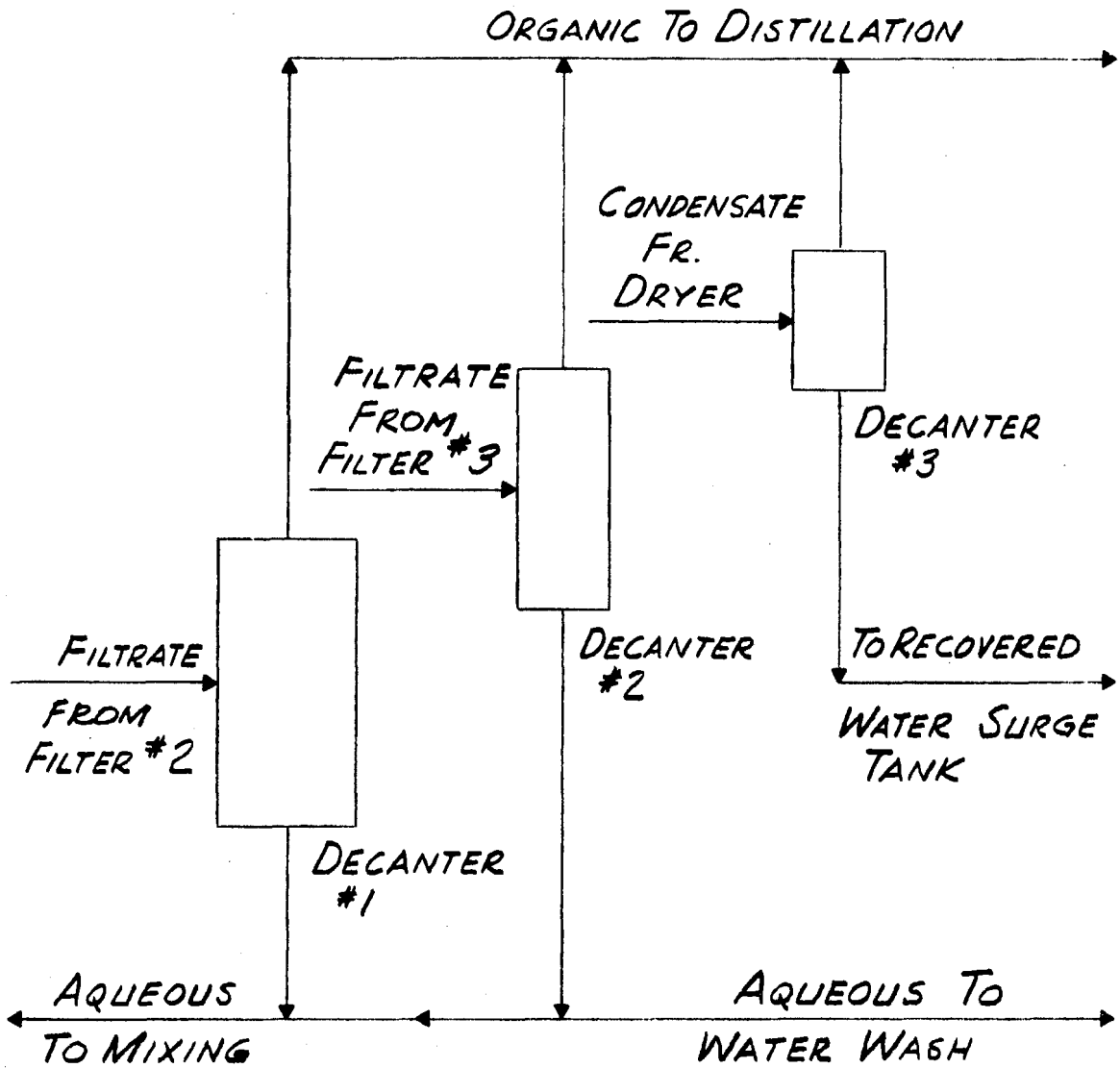

Figure 10. Decantation

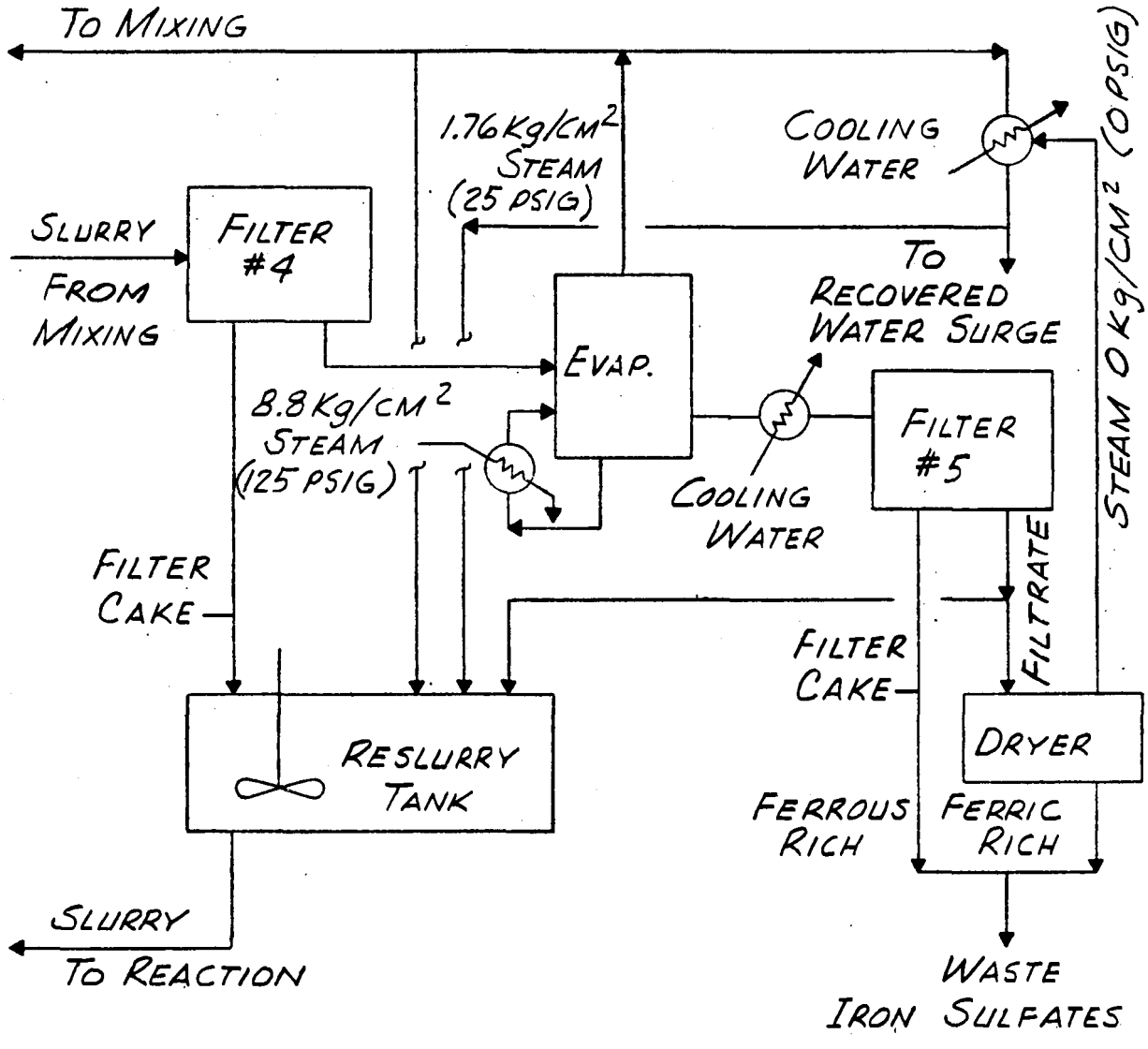

Figure 11. Iron Sulfates Removal

4.1.3.12 Distillation - The organic layers from decanters #1, #2, and #3 are forwarded to distillation. Approximately 50% is filtered in a polishing filter, filter #6, to remove coal fines which may have passed through filter #2. The composition of the still feed is 2.34% sulfur and 97.66% naphtha. The still feed is preheated to 119°C in the feed/overhead exchanger. Heat to the reboiler is supplied by 8.8 kg/cm^2 (125 psig) steam from the steam plant. The condensed naphtha is cooled to 71°C, the proper temperature for extraction, combined with the remaining 50% of the organics which bypass distillation and returned to extraction. Molten sulfur collects in the steam jacketed bottom portion of the distillation column to ensure naphtha-free sulfur product. See Figure 12.

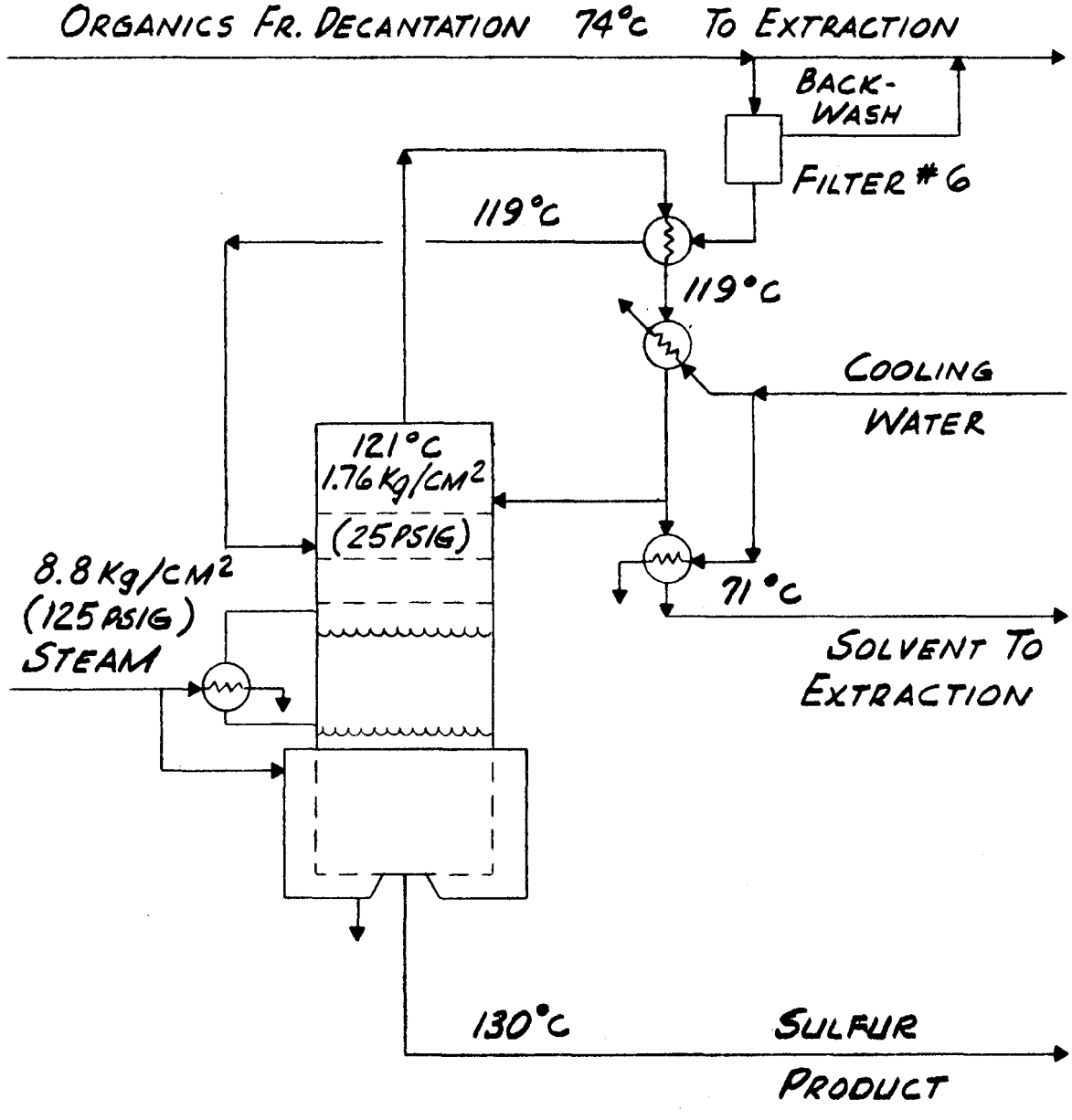

Figure 12. Distillation

4.2 REACTOR SYSTEM STUDIES

4.2.1 Reaction-Regeneration Kinetics

The reactions, equations and data used in evaluating the various reactor designs have been discussed in Section 3.2.1. These are summarized below and a conversion is made so that weight ratio can be used rather than weight percent in the leaching rate expression.

Net overall leaching reaction:

$$FeS_2 + 4.6\ Fe_2(SO_4)_3 + 4.8H_2O \longrightarrow 10.2FeSO_4 + 4.8H_2SO_4 + 0.8S \qquad (3)$$

ΔH = -55.56 kcal/gm mole (-100 M Btu/lb mole) FeS_2 reacted

Leaching rate:

$$dWp/dt = -K_L Wp^2 Y^2 \qquad (6)$$

Using the relationships

$$Wp = 100\ Wr/(1 + Wr) \quad \text{and} \quad dWp = 100\ dWr/(1 + Wr)^2$$

the leaching rate expression can be changed to

$$dWr/dt = -K_L Wr^2 Y^2 \qquad (9)$$

where Wr = weight ratio of iron pyrites to pyrite-free coal

K_L = 200,000 exp(-3524.67/T), hr^{-1} for -149 micron (-100 mesh) coal with absolute temperature, T, in °K.

Net overall regeneration reaction:

$$4FeSO_4 + 2H_2SO_4 + O_2 \longrightarrow 2Fe_2(SO_4)_3 + 2H_2O \quad (4)$$

$\Delta H = -74.45$ kcal/gm mole (-134 M Btu/lb mole) O_2 reacted

Regeneration rate:

$$-dF/dt = K_R P F^2 \quad (8)$$

where $K_R = 0.402 \times 10^8 \exp(-6646.5/T)$, liter/(gm mole)(atm)(hr)

F = concentration of ferrous ion, gm mole Fe^{+2}/liter

P = oxygen partial pressure, atmospheres

T = absolute temperature, °K

or $K_R = 6.439 \times 10^8 \exp(-6646.5/T)$, cu ft/(lb mole)(atm)(hr)

F = lb mole Fe^{+2}/cu ft; P = atmospheres; T = °K

The above relationships were utilized in developing a program which calculates the output concentrations from the mixing tank and from the reactor for various combinations of temperature, pressure, residence time, reactor volume, input concentrations and percentage pyrites conversion. The program is included in Section 10.4.1.

4.2.2 Effects of Other Variables

In addition to the variables that are involved in the listed computer program, several other conditions were imposed on the calculations and the evaluation and selection of reactors. These were as follows:

-- The selection of the materials of construction determined the range of operating conditions for the reactors. Stainless steel #304 will corrode

in ferric sulfate and sulfuric acid solutions above 70°C, and neoprene rubber linings are rated as satisfactory only to 102°C. Therefore, for contact with reaction materials above 102°C titanium metal or an acid brick lining with a neoprene membrane between the brick and the tank was chosen.

-- The total concentration of iron ions in the solution was limited to 5 wt%.

-- A liquid/solids ratio of 2 grams solution per gram of solids was established as the minimum required to adequately slurry and handle the coal in the reactor system.

4.2.3 Reactor Configurations Studied

Four types of reactor systems were evaluated by digital simulation using the stoichiometry and rate equations of expressions (3) through (9). These types were as follows: (A) batch reactor, (B) continuous reactors with an external unit for the regeneration of ferrous sulfate, (C) continuous reactors in series, (D) continuous reactors in parallel. A summary of the results of these simulations at selected conditions is given in Tables 5-8. Examples of the program output are included in Section 10.4.2 following the program listing. A discussion of each case is given below.

4.2.3.1 Batch Reactors - The batch reactor system is efficient from the viewpoint of reaction kinetics, but the time required to fill and empty the reactor for each batch reduces the overall efficiency. An extensive piping and

valving arrangement is required which adds to the cost and increases the complexity of operation. An example of the batch reactor system calculations is given in Table 5.

The feed materials are mixed in an agitated 95 cubic meter (25,000 gallon) vessel to provide a 15 minute residence time. Pressure and temperature in the mixing tank are atmospheric and 102°C respectively. Pyrite conversion in the mixer is 9.7%. The mixer effluent is heated to 125°C and charged to the 380 cubic meter (100,000 gallon) batch reactor. The oxygen pressure is 5.6 kg/cm^2 (80 psia). At the end of the one hour fill cycle the computed temperature is 141°C and an additional 38% of the original pyrites have been converted. Eight hours after the reactor has been filled the temperature is 150.4°C and the final pyrite conversion is 94.6%. An alternate way to operate the batch system would be to feed the mixer effluent directly to the reactors at 102°C. The resultant lower temperature would yield a lower pyrite conversion as shown in Section 10.4.2 in the printout for Batch Reactors, Alternative Run No. 1.

4.2.3.2 Continuous Reactors with External Regeneration - Initial calculations showed that two large thickeners used as reactors in series could react 95% of the iron pyrites if the clear overflow liquor was regenerated with oxygen in an external plug flow reactor. A portion of the regenerated solution would be mixed with the feed streams to raise the ferric to total iron mole ratio in the thickener-reactors. A solution containing 10% by weight of iron was desirable to minimize the amount of liquid handled in the

thickeners and thus keep them at a reasonable size. However, serious doubts were raised about the effectiveness of the thickeners to settle the coal particles using a concentrated iron solution. An example of the calculations for this system is given in Table 6.

The two thickeners are approximated by two 18,900 cubic meter (5 million gallon) perfectly mixed tanks in series. The underflow is assumed to be 35 wt% solids. The clear overflow streams are regenerated with oxygen at 14.1 kg/cm^2 (200 psia) and 130°C, as shown by the regeneration tank column in Table 6. Several calculation trials are required to close a material balance on the system. A more accurate model of the thickener-reactor would presumably show better pyrite conversions than those calculated. Additional data in the form of batch settling tests could be used to model vertical concentration gradients in the thickeners. These tests should cover a range of liquid to solid weight ratios from 12:1 to 4:1.

4.2.3.3 Continuous Reactors in Series - A series of continuous reactors was simulated using a height to diameter ratio of 3.5, a 150°C operating temperature and 5.6 kg/cm^2 (80 psia) head pressure. Each reactor was assumed to be four well mixed sections in series. This might be the case if there were no external recirculation and if baffles or slow moving agitator arms were used to prevent a maldistribution of flow through the reactor. A 190 cubic meter (50,000 gallon) mixing vessel, followed by eight 380 cubic

meter (100,000 gallon) reactors in series, yielded a 94.4% conversion of the pyritic sulfur. Oxygen was fed only to the first three reactors in the ratios 12:5:2 to maintain the ferric to total iron ratio at a maximum. Under these conditions gas flow would induce intense mixing in the first reactor, making it one or two well mixed sections rather than four. In addition, gas holdup would take up 10-15% of the reactor volume, so at least one additional reactor would be required to achieve 95% conversion. Sample calculation results for this system are given in Table 7.

4.2.3.4 Continuous Reactors in Parallel - A simpler system using a 190 cubic meter (50,000 gallon) mixing tank and ten 380 cubic meter (100,000 gallon) reactors in parallel was simulated using a height to diameter ratio of 7.0, a 130°C inlet temperature and a 5.6 kg/cm^2 (80 psia) head pressure. Results showed that 95% of the pyritic sulfur was removed. This system would be cheaper to construct and simpler to operate as each reactor could be operated independently of the others. Each reactor would be a 4.1 meter (13'-6") diameter by 29.3 meter (96 foot) high tower with both the coal slurry and the oxygen being fed at the bottom. Assuming each reactor to be ten well mixed sections 78% of the oxygen is consumed in the first 6.1 meters (20 feet) of the tower. The heat generated by reaction increases the temperature from 130°C to 149°C at this point. Heat released during further reaction is about equal to the average heat loss from the tower of 259,560 kcal/hr (1,030,000 Btu/hr) and the slurry leaves the tower at 147°C. In order to reduce backmixing in the bottom of the tower, some of the oxygen could be added to the tower at a point ten feet above the bottom. Baffles or perforated plates could be

used to maintain good flow distribution of the slurry. A possible improvement in iron pyrite leaching efficiency over that calculated should result from the heavier pyrite laden particles having a longer residence time in the reaction tower than coal particles containing low amounts of pyrite. On the other hand, several assumptions made in the parallel reactor calculations would have to be checked to verify the results. The most notable of these is the extrapolation of the regeneration rate equation from 130°C to 150°C. Oxygen mass transfer rates could limit the regeneration rate to less than that calculated. The formation of insoluble compounds at elevated temperatures, as touched upon in the TRW report[1], should also be checked. Results from a sample calculation for this system are given in Table 8.

It should be noted that the calculation for the 380 cubic meter (100,000 gallon) reactor is for only one of ten parallel reactors, so all flow rates must be multiplied by ten to get the total flows for the system.

4.2.4 Reactor Selection

The parallel reactor system described above is used as the basis of conceptual design for a plant to process 110.33 tons (121.65 short tons) per hour of dry coal containing 6.7 wt% iron pyrites. Four identical trains are used as a basis for the conceptual design which has a product output of 9070 metric tons (10,000 short tons) per day after fuel coal and losses are subtracted. Computer calculations for the selected design are shown in Table 8, section two. The results of these calculations were used as an input for the plant material balance. The mixing tank volume was set at

316 cubic meters (83,525 gallons) so that the ratio of ferric to ferrous iron ions in the tank effluent was exactly in the rejection ratio required to maintain the ferric to total iron ratio in the feed solution at 0.8. A portion of the solution is removed and is indicated as sulfate waste. Water and sulfuric acid are added to maintain the system balance. The resulting slurry is fed to the system of ten parallel reactors. The amounts of ferric sulfate, ferrous sulfate and sulfuric acid leaving the reactor system are exactly the amounts needed in the mixing tank feed. Pyrite conversion of 95% is achieved.

Conventional engineering units were used in the computer program and in the output tables. The initial studies were for an hourly rate of 100 tons of coal containing 6% pyrites, dry basis, Tables 5-8.

Table 5. BATCH REACTORS

	Mixer		Reactor Fill Cycle		Reactor Batch Cycle	
Initial temperature, °C	--		125		141.0	
Final temperature, °C	102		141.0		150.4	
Pressure, psia (kg/cm²)	14.7 (1.0)		80.0 (5.6)		80.0 (5.6)	
Reactor volume, M gal. (M³)	25 (95)		101 (380)		101 (380)	
Time Period, Hrs.	0 to 0.25		0.25 to 1.27		0.25 to 8.24	
% conversion of FeS_2 input	9.70		42.01		93.87	
CHARGE, Weight Units *	Input	Output	Input	Interim	Input	Output
Coal (pure)	94.00	94.00	95.87	95.87		95.87
FeS_2	6.00	5.41	5.51	3.19	Same	.33
S	0.00	0.12	0.12	.61	as	1.22
$Fe_2(SO_4)_3$	57.30	48.36	49.31	71.48		60.59
$FeSO_4$	10.90	18.42	18.79	4.89	Fill	16.78
H_2SO_4	3.50	5.78	5.89	.83	Cycle	3.97
H_2O Liquid	328.29	327.87	334.42	335.27		334.59
O_2	0	0	2.41	.10	3.80	.17
Inert Gas	0	0	0.01	0.01	0.02	0.17
H_2O Vapor	0	0	0.00	0.08	0.00	0.02
Total	499.99	499.99	512.39	512.38	513.78	513.76
CHARGE, Moles (S cmpds, only)	Input	Output	Input	Output	Input	Output
FeS_2	100.03	90.32	92.00	53.34	92.00	5.63
S	0	7.76	7.63	38.55	7.63	76.72
$Fe_2(SO_4)_3$	286.60	241.92	246.67	357.54	246.67	303.07
$FeSO_4$	143.51	242.57	247.51	64.40	247.51	221.05
H_2SO_4	71.37	117.98	120.22	17.07	120.22	81.07

*The Mixer Weights represent a flow, in & Out; The Reactor Weights represent the starting and ending inventory analysis for the cycle shown.

Table 6. CONTINUOUS REACTORS WITH EXTERNAL REGENERATION*

	Settler #1		Settler #2		Regeneration Tank	
Final temperature, °C	102		102		130	
Pressure, psia (kg/cm^2)	14.7 (1.0)		14.7 (1.0)		200.0 (14.1)	
Reactor volume, M gal. (M^3)	5000 (18,900)		5000 (18,900)		3.5 (13)	
Residence time, hrs.	18.40		18.36		(1.05 minutes)	
% conversion of FeS_2 input	72.86		59.62		0	
FLOW RATE, Weight Units	Input	Output	Input	Output	Input	Output
Coal (pure)	94.00	94.00	94.00	94.00	0	0
FeS_2	6.00	1.62	1.62	0.65	0	0
S	0	0.93	0.93	1.13	0	- 0
$Fe_2(SO_4)_3$	343.79	276.76	347.18	332.37	522.55	609.32
$FeSO_4$	29.02	85.48	34.38	46.85	113.59	47.65
H_2SO_4	9.32	26.47	8.36	12.15	34.39	13.10
H_2O Liquid	984.89	981.74	984.89	984.31	1,708.31	1,712.12
O_2	0	0	0	0	3.64	0.16
Inert gas	0	0	0	0	0.02	0.02
H_2O Vapor	0	0	0	0	0.00	0.02
Total	1,467.03	1,467.03	1,471.37	1,471.48	2,382.51	2,382.41

*Effluents split, clears and filtrate regenerated.

Table 7. CONTINUOUS REACTORS IN SERIES*

	Mixer		Reactor #1		Reactor #2		Reactor #3		Reactor #4	
Final temperature, °C	102		150		150		150		150	
Pressure, psia (kg/cm^2)	14.7 (1.0)		80 (5.6)		80 (5.6)		80 (5.6)		80 (5.6)	
Reactor volume, M gal. (M^3)	50 (190)		100 (380)		100 (380)		100 (380)		100 (380)	
Residence time, hrs.	0.5		1.01		1.01		1.01		1.01	
% conversion of FeS_2 input	14.31		60.44		42.83		31.87		22.62	
% of initial FeS_2 converted	14.31		51.79		14.51		6.17		2.98	
FLOW RATE, Weight Units	Input	Output	Input	Output	Input	Output	Input	Output	Input	Output
Coal (pure)	94.00	94.00	**	94.00		94.00		94.00		94.00
FeS_2	6.00	5.14		2.03		1.16		0.79		0.61
S	0	0.18		0.85		1.03		1.11		1.15
$Fe_2(SO_4)_3$	57.30	44.13		56.47		68.10		72.42		69.68
$FeSO_4$	10.90	21.99		16.56		8.82		6.00		8.32
H_2SO_4	3.50	6.87		4.35		1.64		.64		1.34
H_2O Liquid	328.30	327.68		328.10		328.58		328.76		328.63
O_2	0	0	2.40	0.00	1.00	0.	0.40	0	0	0
Inert Gas	0	0	.01	.01	0.01	0.01	.00	.00	0	0.00
H_2O Vapor	0	0	.00	.04	.0	0.02	.00	.01	0	.00
Total	500.00	500.00		502.41		503.36		503.74		503.73

*Each reactor is four CSTR'S in series, upflow.
**The solids and solution input for each reactor is the output from the preceding reactor. Totals match output totals.

Table 7 (continued). CONTINUOUS REACTORS IN SERIES*

	Reactor #5		Reactor #6		Reactor #7		Reactor #8	
Final temperature, °C	150		150		150		150	
Pressure, psia (kg/cm^2)	80 (5.6)		80 (5.6)		80 (5.6)		80 (5.6)	
Reactor volume, M gal. (M^3)	100 (380)		100 (380)		100 (380)		100 (380)	
Residence time, hrs.	1.01		1.01		1.01		1.01	
% conversion of FeS_2 input	17.63		14.52		12.36		10.78	
% of initial FeS_2 converted	1.80		1.22		0.88		0.67	
FLOW RATE, Weight Units	Input	Output	Input	Output	Input	Output	Input	Output
Coal (pure)	94.00	94.00	**	94.00		93.40		94.00
FeS_2	0.63	0.50		0.43		0.38		0.34
S	1.14	1.17		1.19		1.20		1.21
$Fe_2(SO_4)_3$	70.31	68.02		66.90		66.08		65.45
$FeSO_4$	7.79	9.71		10.66		11.35		11.87
H_2SO_4	1.18	1.77		2.06		2.27		2.43
H_2O Liquid	328.10	328.55		328.50		328.46		328.43
O_2	0	0		0		0		0
Inert Gas		0		0		0		0
H_2O Vapor		0		0		0		0
Total	503.73	503.73		503.73		503.73		503.73

*Each reactor is four CSTR'S in series, upflow.
**The solids and solution input for each reactor is the output from the preceding reactor.

Table 8. CONTINUOUS REACTORS IN PARALLEL, UPFLOW

	Mixer		Reactors		Mixer		Reactors		Sulfate Waste
Initial temperature, °C			130		100		102		102
Final temperature, °C	102		146.7		102		145.4		130
Pressure, psia (kg/cm^2)	14.7 (1.0)		80.0 (5.6)		14.7 (1.0)		80.0 (5.6)		14.7 (1.0)
Reactor volume, M gal. (M^3)	50 (190)		100 (380)		84 (320)		68 (260)		2.9 (11)
Residence time, hrs.	0.5		10.11		1.04		9.67		2
% conversion of FeS_2 input	14.35		93.46		13.86		94.36		--
FLOW RATE, Weight Units	Input	Output	Input	Output	Input	Output	Input	Output	Waste
Coal (pure)	94.00	94.00	9.400	9.40	113.50	113.50	11.350	11.350	
FeS_2	6.00	5.14	0.514	0.034	8.15	7.02	0.702	0.040	
S	0	0.18	0.018	0.121	0	0.24	0.024	0.166	
$Fe_2(SO_4)_3$	57.30	44.09	4.409	6.162	34.85	17.53	1.255	3.485	4.98
$FeSO_4$	10.90	22.03	2.203	1.479	6.63	21.22	1.519	0.663	6.03
H_2SO_4	3.50	6.88	0.688	0.337	2.13	6.56	0.652	0.213	1.87
H_2O Liquid	328.30	327.68	32.768	32.829	238.98	238.17	20.117	20.193	39.29
O_2	0	0	0.365	0	0	0	0.496	0	
Inert Gas	0	0	0.002	0.002	0	0	0.003	0.003	
H_2O Vapor	0	0	0	0.004	0	0	0	0.004	
Total	500.00	500.00	50.367	50.367	404.24	404.24	36.117	36.117	

4.3 MATERIALS OF CONSTRUCTION

The materials used for construction and linings are listed in general terms on the Index Flowsheet, Section 4.5, Figure 13, and in detail in the equipment specifications, Section 10.2.1. The rationale used in the selection of materials for good chemical resistance is given in this section.

4.3.1 Leaching and Sulfate Concentration

The dominant materials prescribed for the streams containing sulfates in the process are brick lined steel, neoprene lined steel and titanium. Within its temperature limitation and subject to the absence of naphtha, neoprene is ideally suited for handling the coal slurry because it combines good resistance to acidic ferric sulfate solutions with outstanding resistance to abrasion. The acid brick lining suggested for the reactors also possesses these virtues to a high degree. Although a properly installed brick lining is an effective corrosion barrier, in this instance it is only necessary that it provide thermal protection to the chemically resistant neoprene membrane. This protection in depth should assure long life with minimal maintenance for these critical vessels. Also, since the vessel must have a rather heavy metal wall because of its size and the pressure, brick lined steel has a favorable cost: i.e., less than one-half the cost of any physically acceptable stainless steel vessel, either solid or clad. The larger of the rubber lined vessels should also be somewhat cheaper than their counterparts in #304 stainless steel.

Both the austenitic stainless steels and titanium should show low corrosion rates in the strongly oxidizing, acidic sulfate phases and streams. Wrought austenitic stainless steels have been avoided for these streams because the aqueous phase will undoubtedly contain enough chloride to assure their premature failure by stress corrosion cracking. This same judgment does not apply to the cast #316 stainless steel components of pumps and valves, since the castings rarely fail due to chloride cracking, presumably because of their ferrite content.

The estimated maximum chloride levels at which there is a reasonable chance for an economic life with wrought austenitic stainless steels in the oxidizing sulfate streams are:

1. 10 ppm at 150°C
2. 20 ppm at 100°C
3. 50 ppm at 70°C

Factual support for these estimates can be found in the excellent review on chloride cracking of stainless steels by Latanision and Staehle, pp. 214-307, "Fundamental Aspects of Stress Corrosion Cracking", National Association of Corrosion Engineers, Houston, 1969[5], and the paper on chloride cracking in sulfate solutions by English and Griess, Corrosion 20, 138t-144t (1964)[6].

Some savings in capital could be made by qualifying a mixed ferritic-austenitic or an ultra-low nitrogen ferritic stainless steel for the heat exchanger tubes that are recommended to be titanium. Complete substitution would appear to save a maximum of about $50,000 on the project. This seems

hardly worth the test effort and the added risk associated with the change when viewed against the scope of the overall project.

4.3.2 Sulfur Extraction and Coal Washing

Some preliminary analyses[7] indicate that the leach step results in dissolved chloride levels in ferric sulfate solution of 50 ppm on a once through basis, which by itself neither increases nor allays the concern about cracking. These analyses do appear to be contrary to the statements in "Chemistry of Coal Utilization", Vol. 1, pp. 586 to 588[8], that 23 to 75% of the chloride content of English coals containing 3550 ppm chloride or less is removed by simple water washing. Extraction of only 10% of the chloride in Lower Kittanning coal would result in about 250 ppm chloride in the aqueous sulfate phase. Such a level of chloride would be clearly excessive for the #304 stainless steel recommended for the naphtha extractor. This point will need to be adequately documented with laboratory and pilot plant data.

If the wash water is reasonably low in chloride, the water wash tank should be safe from chloride cracking. However, if use is made of an alternative plan to water wash prior to the naphtha extractor, the water wash tank can be made of rubber lined steel and the naphtha extractor can then be made of #304 stainless steel with good confidence that both of these vessels will have a long life.

Ceilcote 64 polyester is suggested as a lining for various vessels handling the naphtha and sulfate solutions. This lining is generically a polyester, but it is known that

other polyester linings, which may be superior to Ceilcote 64 for other services, are inferior to Ceilcote 64 in naphtha service. Any alternative to Ceilcote 64 for these vessels should be qualified by testing. Although a Ceilcote 64 lining will be substantially cheaper than a rubber lining, it is not recommended for any of the vessels handling coal slurry because of its relatively poor resistance to abrasion.

The portion of the system for removing sulfur from the naphtha could benefit from testing or from examination relative to closely related processes. Steel has good resistance to dry sulfur but is generally susceptible to severe corrosion by sulfur in the presence of water and by hydrogen sulfide in the presence of water. Accordingly much of this system has been upgraded to #304 stainless steel. It is distinctly possible that carbon steel would be adequate for some of this equipment.

It is difficult to visualize an alternative sound materials plan that will substantially reduce the capital requirements of the process as now defined.

4.4 LABORATORY STUDIES

The principal objectives of this contract did not initially include the obtaining of laboratory data; however, the listing of research and development needs was encouraged, and limited literature analysis and bench work were authorized. Accordingly, a number of subjects that needed further delineation in the preparation of the process design or in the consideration of alternatives were listed in the Contractor's reports to the EPA during the course of the project. Some bench work and analysis of the chemistry involved were undertaken to undergird process design decisions.

4.4.1 Additional Data Needs by Sectors

Listed below are regions in which additional data need to be obtained as this project progresses. The sectors into which the process is divided are defined in the Block Flowsheet, Figure 1, in Section 4.1.2. Specific recommendations have been listed in Chapter 2.0.

Coal Handling, Sector 000 -- Coal Receiving, Storage, Handling, Sampling and Analysis

Sectors 900-1000 -- Coal Drying, Compacting and Shipping

Little new data need to be generated. Latest rapid analytical techniques should be identified for use in continuous chemical process control, and minimum drying and compaction requirements should be determined from utility and coal industry sources.

Leaching and Regeneration, Sectors 100-400 -- Mixing, Leaching, Regeneration and Filtration.

The chemical reaction portions of this region have received much attention at TRW, Inc.[2,3], since the publication of EPA-R2-73-173a and 173b[1]. Additional suggestions are made in Section 4.2 and Chapter 7.0. Techniques from the minerals processing industries should be incorporated where economies of bulk solids processing can be shown.

Extraction and Washing, Sectors 500-800 and 1400 -- Sulfur Extraction, Distillation, Coal Filter Cake and Slurry Washing, and Decantation of Inorganic Solutions and Solvents.

Additional data and new methods have been developed by TRW, Inc., researchers[2,3].

Iron Sulfates Removal, Sector 1100 -- Iron Sulfates Removal and Disposition.

Section 4.4.2.3 presents data and ideas of interest.

4.4.2 Data from Laboratory Work or the Literature

4.4.2.1 Preliminary Data - In preparation for possible later laboratory work and to clarify a few points in the conceptual design, a limited number of short literature studies or laboratory experiments were performed. These are reported below.

Grinding and Screen Analysis of Coal--Samples of ground coal were obtained from the Company's powerhouses in Midland and reground to -14 mesh in a laboratory blender. The samples were then screened and the -595 micron (-28 mesh) portions were used for a number of experiments. This coal originated in the southeastern Ohio mines of the Youghiogheny and Ohio Coal Company (Y & O) and the North American Coal Company (NA). Screen analyses are given in Table 9.

Table 9.

SIZE RANGE OF PULVERIZED COAL SAMPLES

(Data are weight percent)

Topsize, microns	Size Range, Tyler mesh	E. Powerhouse Ground	E. Powerhouse Reground	W. Powerhouse Ground	W. Powerhouse Reground
4000	+14	51.0		38.3	
1190	- 14 +28		1.1		20.0
1190	- 14 +35	16.2		14.2	
595	- 28 +100		76.3		63.7
420	- 35 +100	20.3		35.4	
149	-100 +200	5.9	17.2	7.8	11.8
74	-200	6.6	5.4	4.3	4.5
	TOTAL	100.0	100.0	100.0	100.0

Chemical Analysis - Three one gallon coal samples were obtained from the supplier companies. These were processed and analyzed by Commercial Testing and Engineering Co. (CTE), Cleveland, Ohio, and used as standards in subsequent work. The analyses are reported in Table 10. The different proximate analyses included represent several standard commercial reporting procedures used as receiving analyses along with data for the fusion temperature of the ash, which is not reproduced here because it is not pertinent to this investigation.

Table 10.

PROXIMATE ANALYSIS AND SULFUR FORMS ANALYSIS OF COAL SAMPLES FROM COMPANY POWER HOUSE

Coal Company	NA Powhatan No. 5	Y&O Allison	Y&O Nelms No. 2
CTE Sample No.	CL 85413	CZ 6350	CZ 6352
Proximate Analysis: As received:			
Fixed Carbon, %	--	--	45.19
Volatile, %	ca 36.0	ca 36.0	33.70
Ash, %	10.87	14.54	15.50
Moisture, %	6.24	7.92	5.61
TOTAL			100.00
Heating value, Btu/lb	12206	11384	11654
Total sulfur, %	3.91	4.51	4.31
Sulfur Forms Analysis: Dry basis:			
Pyritic S., %	2.16	2.59	3.97
Sulfate S., %	0.03	0.04	0.03
Organic S., %	1.98	2.27	0.57
TOTAL	4.17	4.90	4.57

Methods of chemical analysis of coal were briefly investigated so that laboratory experiments could be done quickly and economically if the need developed. The following statement by Dr. G. C. Sinke of the Chemical Engineering Laboratory outlines the method which was chosen:

> "A paper by S. S. Pollack, Fuel 50, 453-4 (1971)[9] demonstrated that pyrite when mixed with charcoal could be detected down to about 0.2% by weight by

x-ray diffraction technique. We have determined the pyrite in two samples of coal as 3.3% and 6.1%, respectively, by standard wet analysis methods. Analytical Laboratories personnel examined these two samples by x-ray diffraction and found that, by plotting peak height versus % FeS_2, one could draw a straight line through the origin that fitted these two points within 0.2%. An x-ray diffraction peak can be obtained in about 15 minutes. This rapid method can replace the tedious ASTM wet analysis procedure with little or no loss in accuracy, and it should be exceedingly useful in monitoring pyrite removal processes."

Coal Wetting and Settling - One ml of -1190 micron (-14 mesh) reground, W. Powerhouse pulverized coal was added to the surface of 50 ml of liquid in a 2 oz. bottle. After allowing five minutes for the coal to be wetted, the bottle was shaken vigorously for one minute and then set on the bench for settling and observation. This was repeated for several liquids with the following results:

Liquid			Condition after 10 minutes
Water, ml	Other, ml	name	
50	--	--	Coal was dispersed throughout the liquid.
30	20	toluene	Coal was all in the solvent layer above the clear water layer.
30	20	hexane	Coal was all in the solvent layer above the clear water layer.
30	20	methylene chloride	Coal was all in the solvent layer underneath the fairly clear water layer.

The bottles were shaken one to three times per day and observed for two days. The coal dispersal remained as described. After one month, with shaking one to three times per week, the appearance was as follows:

water	unchanged
water, toluene	coal dispersed in each layer
water, hexane	solvent had evaporated
water, methylene chloride	unchanged

The coal was preferentially wetted by the solvent initially, and then it gradually became distributed in the water and solvent, in the case of the lighter toluene and hexane. These observations suggested that solvent-water separation by decantation should be performed after removal of the coal by filtration.

Liquid:coal Ratio - In a small test in a 2 oz. bottle it was found that the following mixtures were stirrable but that the coal did not stay in suspension when stirring was stopped.

	#1	#2
10 to 14 mesh coal	20 gm	20 gm
Tapwater	5 gm, (5 ml)	30 gm (30 ml)
Toluene	21 gm, (25 ml)	--
Liquid:solids wt. ratio	1.30	1.50

The solvent clung tenaciously to the coal, and solvent-wet coal stuck to the stirring rod more than did water-wet coal.

This test indicated that a very low liquid to solids ratio should be acceptable in the stirred tanks, that solids

accumulation might be experienced in some of the mechanical operations involving solvent-wet coal, and that complete removal of solvent from coal filter cake will be very difficult. These factors should be investigated and data obtained to assure an operable design.

Preparation of an Iron Sulfates Standard Solution - Reagent grade ferrous sulfate and ferric sulfate crystals were dissolved in water, cooled and filtered to make a stock solution, Solution A, for use in various experiments (discussed later) as shown below:

Initial material:

	Iron Sulfate, %	Water, %
$FeSO_4 \cdot 7H_2O$	54.7	45.3
$Fe_2(SO_4)_3 \cdot 9H_2O$	75.2	24.8

Solution A:

	Wt %
$FeSO_4$	2
$Fe_2(SO_4)_3$	26
Water	72
TOTAL	100

Solution pH = 0.4

Specific Gravity:

	Water	Solution A
25°C	1.003	1.317
80°C	1.029	1.276

Viscosity in centisokes:

25°C	0.8963	3.718
50°C	0.5560	1.818
100°C	0.2960	0.7604

Solvent Extraction of Elemental Sulfur - The solubility of sulfur in hot chlorinated solvents is so great that these and possibly other solvents ought to be looked at in the laboratory in addition to toluene and naphtha. Proprietary data show that for elemental sulfur such as contained in volcanic origin surface ores, the solubility of sulfur exceeds 40% by weight for a number of chlorinated solvents near the boiling point of the solvent and approaches infinity if the boiling point of the solvent is above the melting point of sulfur (113° to 120°C). Research personnel of the Western Division, Dow Chemical, U.S.A. have artificially deposited elemental sulfur on 300 mesh top size coal and stripped if off successfully with hot trichloropropane[10].

Good sulfur solubilities are also reported for ammonia, aniline, benzene, carbon disulfide, ethylene dibromide, sodium sulfide solution, phenol, and pyridine. The extent to which these solvents remain on or attack coal and their ability to remove sulfur should be explored.

4.4.2.2 Use of Chemical Agents with Coal - Samples of the coal and the iron sulfates standard solution described in Section 4.4.2.1 were sent to the Company's Designed Products Department in the following amounts:

E. Powerhouse Coal, -14 +100 mesh
(1320 gm of -14 mesh, plus 400 gm of reground -14 mesh)

Iron Sulfates Standard Solution A

Available pertinent literature was reviewed and a series of laboratory tests was performed at room temperature. A summary of the results is given below followed by discussion[37].

Summary

a. Coal/Water System. Hydroclones should be evaluated for their utility in thickening the solids in the coal/water system, both with and without flocculants. Anionic polymer flocculants are most effective and may increase settling and filtration rates by a factor of up to four for polymer dosages in the range of 5 to 25 gm per metric ton (0.01 - 0.05 lb/short ton) of solids.

DOWFAX®* 2A1 surfactant will significantly speed up the wetting of coal with water. The chemical cost should be balanced against the capital and power costs for a high speed mixer.

b. Coal/Water/Toluene. The introduction of solvents into a solid/aqueous system sometimes causes unusual results related to wetting. The addition of DOWFAX 2A1 may help in getting more of the coal fines out of the toluene layer and into the water layer in a mixed system.

c. Coal/Iron Sulfates Solution System. Nonionic or slightly ionic flocculation polymers plus dilution water of about 25% may increase settling and filtration rates by as much as 30 times at polymer dosages in the range of 62 to 125 gm per metric ton (1/8 -1/4 lb/short ton) of solids.

Discussion

a. Coal/Water System. In systems where anionic flocculants are effective, often one polymer will give faster filter rates and another faster settling rates. For the coal samples used in this series SEPARAN®* AP 273 flocculant gave

*Trademark of The Dow Chemical Company.

the best settling rate with the addition of 25 gm per metric ton (0.05 lb/short ton) of solids, i.e. 25 ppm. The flocs that formed were quite stable. SEPARAN AP 30 gave the best filter rates, and these are shown below. If, after settling, it is found that pumping breaks up the flocs then another addition of about 1/5th as much polymer may be made to reflocculate the settled solids before filtering.

The following filter data were obtained for a slurry containing 1 weight of coal to 2 weights of water:

	No flocculant added	SEPARAN AP 30, 5 gm/metric ton
Cake:		
Thickness, cm	1.27	1.27
Moisture, %	30 - 35	24
Load time, sec.	$\geq$60	16
Filtration Rate:		
Dry coal basis,		
gm/(hr)(cm^2)	49	146 - 195
lb/(hr)(ft^2)	100	300 - 400
Filtrate basis,		
M^3/(hr)(M^2)	0.8	2.6 - 3.5
gal/(hr)(ft^2)	20	65 - 85

The Canadian Department of Energy, Mines and Resources has reported good results in improving hydroclone efficiency using coal/water slurries which were flocculated with polymers such as the SEPARAN polymers used in this work. This was in a paper by J. Visman, and H. A. Hamza, Application of Flocculants in Hydroclone Separation, The Canadian Mining and Metallurgical (CIM) Bulletin, Feb 1973, pp 78-85[11].

b. Coal/Water/Toluene System. A very small amount of DOWFAX 2A1 surfactant added to the water speeded up wetting of the coal and appeared to cause more of the coal to transfer to the water layer. However, the surfactant also made the water and toluene layers more difficult to separate. This is a complex system and needs to be evaluated in further laboratory tests.

c. Coal/Iron Sulfate Solution System. This system gave results similar to other acid leach systems encountered by Dow personnel, e.g. uranium acid leach processing. The work should be repeated for the actual coal being considered and at the expected process temperatures; however, the results reported here may be sufficient for early laboratory stage planning.

In settling tests, for a starting 25% slurry, i.e. 1 weight of as-received coal to 4 weights of Solution A, there was no noticeable settling of the coal in 20 minutes. Addition of up to 25% additional volume of water did not improve settling. The addition of rather large amounts of undiluted polymer, 250 gm/metric ton (0.5 lb/short ton), caused slow settling to occur, 0.05 cm/min. However, when the polymer was added as a dilute water solution, such that 25% additional volume of water contained 60 to 125 gm polymer/metric ton of solids in the slurry to be settled, the settling rate increased significantly to 1.3 - 1.5 cm/min. SEPARAN NP 10 was used as the polymer.

As in the case of settling, the use of polymer and dilution together gave filtration results much improved over those of the 25% coal starting slurry. In the polymer treated cases the slurry was diluted with about 60 ml of water per

100 ml of slurry, and the slurry was allowed to settle to a settled solids volume of 50% of the total volume. Then the filter tests were performed either without further dilution or after the addition of 1 volume of additional water per 4 volumes of settled slurry. The filter test results are given below.

	No polymer, no dilution	Polymer, but no dilution after settling	Polymer, with additional dilution after settling
Type of Polymer	None	SEPARAN MG 200	SEPARAN MG 200
Amount, gm/metric ton	--	100	100
Filtration Rate:			
Dry coal basis,			
gm/(hr)(cm^2)	7.3	19.5 - 22	158 - 195
lb/(hr)(ft^2)	15	40 - 45	325 - 400
Filtrate basis,			
M^3/(hr)(M^2)	0.12 - .16	0.40 - .44	3.7 - 4.0
gal/(hr)(ft^2)	3 - 4	10 - 11	90 - 100
Cake Appearance	very wet	damp	damp-dry

The above data are indicative of the results that can be attained with polymers. Modifications to the base conceptual design case could be made if an economic advantage were indicated for process changes based on more extensive bench or pilot plant results. Some typical Research and Development projections of such applications are discussed in Chapter 6.0.

4.4.2.3 Separation and Disposal of Excess Iron Sulfates - The stoichiometry of the reaction of ferric sulfate with pyrite is given in Section 3.2.1. To accomplish depyritization it is necessary that the dissolved components of FeS_2 be rejected from the system in the gm mole S:Fe ratio of 2/1. It is believed that for each gm mole of FeS_2 there is 0.8 gm mole of elemental sulfur formed, thus leaving 1.2 moles of S to be removed with each mole of Fe. In order to achieve a S:Fe ratio of 1.2/1.0, three moles of Fe(II), as $FeSO_4$, need to be discarded for each mole of Fe(III), as $Fe_2(SO_4)_3$, removed as shown below:

	moles S	moles Fe	S:Fe
3 $FeSO_4$	3	3	1/1
1 $Fe_2(SO_4)_3$	3	2	1.5/1
TOTAL	6	5	1.2/1

Iron hydroxides that precipitate and remain with the depyritized coal and sulfuric acid that is formed in the leach reaction and discarded with the iron sulfates waste will affect the ratio of Fe(II) and Fe(III) sulfates that need to be removed.

In addition, care must be taken that the disposal not rob the system of sulfuric acid needed in the regeneration reaction.

It was found by a short laboratory boiling experiment that the vapors emitted from the waste acid iron sulfate solution were quite acidic, and that there was no formation of large crystals through evaporation and cooling. The boiling was continued until a boiling point of 130°C was reached. The resulting wet mass of solids could not be filtered through

filter paper on a Buechner funnel using aspirator induced suction and did not solidify at room temperature.

A more careful series of experiments was devised and performed. Composite data are shown in Table 11. A new stock solution, Solution B, was made up to more nearly represent the solution leaving the mixer as this solution was characterized at that point in time in the development of the material balance calculations. Ultimately these experimental data were substituted in the material balance calculations to provide a more accurate characterization.

In order to approach the 3 to 1 mole ratio of Fe(II) to Fe(III) most readily, the inlet stream to the iron sulfates removal sector was taken as the acidic filtrate resulting from filtering a side stream of coal slurry leaving the mixer.

It was learned that at about 112°-118°C the liquor was concentrated to the point that about 50% of the material was solid crystals in suspension. These crystals were filtered off, washed with saturated ferrous sulfate solution and the resulting mixed iron sulfates cake was about 50% $FeSO_4$ with appreciable $Fe_2(SO_4)_3$ and H_2SO_4 as shown in Table 11. The remaining filtrate or mother liquor could be recycled to the process or evaporated further and removed from the system after passing over a drum dryer or flaker.

Similar data are plotted on a ternary diagram in Chapter 7.0. The data were used in the design of Sector 1100 and in the Reaction Program summarized in Table 8 with minor changes. The experiment should be repeated as the conceptual design undergoes further change and refinement.

Analysis of the sulfuric acid in these cakes was made difficult by interference of the iron salts in the colorimetric end point. Finally, it was discovered that acetone could be used to extract the acid and free water away from the solids and that the resulting extract could be readily titrated. This type of acetone extraction could be utilized to recover sulfuric acid as needed for the process and to provide a less corrosive waste sulfates refuse.

The conceptual design includes facilities and provision to haul the excess ferrous and ferric sulfate solids to some offsite disposal area. The ultimate disposal of the acid iron sulfates cannot be decided on independently of the economics and opportunities existing in the area of the actual plant sites. However the following ideas are listed for consideration:

a. Precipitate iron hydroxide and calcium sulfate materials with further disposal in the manner of some of the acid mine wastes in Pennsylvania and West Virginia. In this regard it has been found that PURIFLOC®* A23 or SEPARAN A273 flocculants are effective in promoting settling of iron hydroxide in dilute solutions up to 60°C. These methods could be useful if it was decided that residual traces of iron sulfate should be precipitated out of some of the wash streams.

b. Include an acetone extraction step in the process to recover the acid, or determine what other solvents would be suitable.

*Trademark of The Dow Chemical Company.

Table 11. SUCCESSIVE CONCENTRATION OF IRON SULFATES FILTRATE FROM LEACH STEP

	Feed to evaporator[a]	Residual Evaporator liquor	Mixed iron sulfates cake from liquor	Mother liquor for further concentration	Solids remaining after further evaporation[a]
Temperature	95°C	>110°C	50°C	85°C	180°C, 20 mm Hg Abs.
Weight, gms	513	220	118	102	76
Composition, %					
$FeSO_4$	12.0	28.2	50.5 ± 1	2.5 ± 1	3.4 ± 1
$Fe_2(SO_4)_3$	10.9	25.4	14.5 ± 1	38.0 ± 1	51.1 ± 1
H_2SO_4	3.5	7.7	6.0 ± 3	9.5 ± 3	12.6 ± 1
H_2O	73.6	38.7	29.0 ± 1	50.0 ± 2	32.9 ± 2
Mole ratio:					
$FeSO_4/Fe_2(SO_4)_3$	2.9	2.9	9.2	0.17	0.17

[a]The condensate had 0.2 - 0.3% H_2SO_4 from the first evaporator and 0.3 -0.4% H_2SO_4 from the last evaporator. The balance of the condensate was water.

c. Separate the ferrous sulfate, neutralize any acid and reduce ferric ions (for example, with scrap iron), make a concentrated water solution to be used by itself or in combination with magnetite or clay as a heavy media for gravity separation of feed coal preceding the process. Corrosion studies on completely neutralized ferrous sulfate separated from a pilot plant process would show the suitability of using such a heavy medium in commercial carbon steel equipment.

d. Utilize the acid ferric sulfate as a solution to pretreat and partially depyritize either the coal feed to the process or high gravity coal/ash mixtures that might be ultimately used as a process fuel source.

e. Utilize existing technology to react iron sulfates from chemical desulfurization to yield SO_2 and iron oxide. Use other technology to produce H_2S and iron oxides from pyrite concentrates derived from coal washing. Combine the SO_2 and H_2S in a Claus-type process to produce marketable sulfur. Sell the iron oxide as is or upgrade it for sale.

f. Table 22 in Chapter 6.0 lists the value and likely disposition for by-products if there were many chemical leaching plants in a given region. Three other possibilities may be mentioned here.

-- A small quantity of ferrous sulfate is used in an organic chemistry catalyst system wherein ferrous sulfate and hydrogen peroxide are combined to form Fenton reagent. This material is able to supply hydroxyl radicals which attack certain classes of

organic compounds to effect a transition or, in some cases, a destruction of the molecules.

-- A suggestion was made early in the program that electrolytic iron might be a good outlet for iron oxide or iron sulfates. This alternative is discussed in the following statement from Dr. Bruce C. Peters, formerly in the Electrochemical & Metallurgical Corporate Research Laboratory, "The possibility of using an electrolytic scheme to aid in the disposal of the iron sulfate is considered to be small and would require research in the area to ascertain the practicability of it. There are no commercial production routes to iron using electrolysis. Several have been tried using both iron sulfate and iron chloride, but the problems appeared to be too great. Approximately 2% of the iron powder produced is prepared electrolytically, however, this is an electrorefining rather than an electrowinning operation. Both chloride and sulfates electrolytes are used [31,32]".

-- Dr. Stacy L. Daniels, Environmental Control Systems Group, Functional Products and Systems Department, contributed the following statement concerning environmental and process aspects of ferric compounds: "The iron sulfate waste stream can be expected to be contaminated with coal fines, colloidal sulfur, calcium sulfate, and trace amounts of other compounds and elements. A stewardship program would need to be developed for such excess leachate very much along the lines of the Company's recent program for a new grade of ferric chloride resulting from leaching titanium bearing ores.

"The use of ferric chloride as a leaching agent instead of ferric sulfate merits continued consideration so that the best choice can be made regarding overall capital cost, side reactions and residuals, and disposal problems or opportunities related to the nature of the discharged anion.

"Excess leachate would have to compete in quality and price with existing ferric chloride and waste pickle liquor supplies. On an equivalent iron basis the price for $Fe_2(SO_4)_3$ would have to be 80% of the current price for $FeCl_3$."

The September 1974 price for sewage grade $FeCl_3$ was \$80.00/T, anhydrous basis, or about \$232/T of Fe. For partly hydrated $Fe_2(SO_4)_3$ the price was \$39/T (71% $Fe_2(SO_4)_3$) or about \$197/T of Fe[20], i.e., 85% of the equivalent iron price for $FeCl_3$. The large markets for sewage grade ferric ion are in the metropolitan areas and supply contracts are heavily dependent on transportation costs.

4.4.2.4. Compacting of Fine Coal - Lignin sulfonate is used in the base case as the binder for compaction. Pitch is another alternative. Both of these have sulfur contents themselves and both could be in short supply if a number of coal plants began using them.

Development personnel of the Dowell Division, Dow Chemical U.S.A., have been working for over three years on methods to make the handling and shipment of coal fines practicable. They have worked with a number of companies on commercial applications of their developments, and additional work and new developments are in progress.

Dowell has found that film forming latexes can be utilized with other additives in an ecologically suitable binder to agglomerate -841 micron (-20 mesh) coal fines to minimize losses from wind and handling. The following was compiled from internal Company reports by K.H. Nimerick and a letter by C. F. Parks of Dowell[12,13,14].

In a typical pelletizing operation the binder is first mixed with the coal fines and then this mixture is fed continuously onto a revolving pelletizing disk. Additional liquid may be dripped onto the revolving coal charge. The pellets are formed and compacted by centrifugal force. As the number of pellets increases, they gradually overflow the volume of the disc and fall into a collection bin. These pellets are then cured by drying to form pellets with sufficient dry strength for handling.

A wide range of binder agents was tested. The preferred system is based on a water slurry containing 4% by weight of Wyoming bentonite clay. To this is added DOWELL®* M166 latex binder, a styrene-butadiene latex emulsion in water. For 0.9 metric tons (1 short ton) of coal fines the slurry would contain 10.9 kg (24 pounds) of bentonite, 2.6 to 4.0 liters (0.7 to 1.05 gallons) of DOWELL M166 and 272.5 liters (72 gallons) of water. The cost of chemicals would be on the order of $3.03 per metric ton ($2.75 per short ton) of coal.

Another approach to the problem of wind erosion is the spraying of a binder mixture onto the surface of coal in open rail cars or in stockpiles. An efficient binder has been developed and is coded DOWELL M167. It is a blend of

*Trademark of The Dow Chemical Company.

styrene-butadiene latex, a surfactant, and ethylene glycol. The surfactant allows rapid wetting and penetration of the particulate materials. The ethylene glycol provides freeze-thaw stability to the M167, and the latex forms a water resistant crust which prevents wind erosion. The M167 is free of sulfur, halogens and heavy metals that may be of ecological concern.

The DOWELL M167 is applied to the coal surface as a 4 to 10% aqueous dilution such that 15-22.7 liters (4 to 6 gallons) of aqueous slurry are used per 9.3 M^2 (100 square feet). Finer sized particles require larger volumes and higher concentrations of binder. This amount of slurry applied to the surface produces a 0.6 to 5.1 cm (0.25 to 2.0 inch) thick crust that will cure at ambient conditions. At 90% humidity, 11.3 liters (3 gallons) of 10% M167 per 9.3 M^2 (100 square feet) will cure in two hours; 30.3 liters (8 gallons) per 9.3 M^2 (100 square feet) will cure in 10.5 hours.

The amount of chemical agents or M167 used for a 91 metric ton (100 short ton) open rail car would be in the order of 4.7 to 9.5 kg (10 to 20 pounds), or about 0.017%. For an assumed $0.072 per kg ($0.32 per pound) average binder cost this would amount to $0.055 per metric ton ($0.05 per short ton) for the chemical cost. The added moisture would be negligible compared to that occurring in coals exposed to the weather, e.g. from less than 0.3% for a 10% dilution to 0.75% for a 4% dilution. Where the right conditions could be set up, as in the spraying of open cars or piles and supplementary water spraying of intermediate transfer points, this could be an attractive alternative to complete pelletizing. Additional stockpile stabilization at the user's plant would cost less than in-transit stabilization.

4.5 PROCESS DESIGN

The process design description that follows is divided into sectors. Reference is given to the appropriate process flowsheet, the plot plan and/or process train layout drawings, the stream numbers in the mass-energy balance, and the equipment specifications. Figure 13 is an index flowsheet showing the complete chemical processing. Figure 14 is a legend sheet showing symbols and abbreviations. No attempt has been made to distinguish between U.S. horsepower and metric horsepower because the 1.4% difference is less than the limits of error in the specification.

4.5.1 Coal Preparation-Sector 000:

(Figure 15, Process Flowsheet #1)

Mine run coal, in 200 mm (8") maximum lump size, is received by rail in 90 metric ton (100 short ton) cars. At capacity, 130 cars per day are required. Provision is made for bottom dump cars or conventional cars, which utilize a rotary car dumper #002*. It is assumed that the cars will be moved through the car dumper house #001 by the railroad company.

From hopper #003 under the dumper four feeders #004A-D discharge onto collection conveyor #005, which discharges to conveyor #006. All conveyors operate at 2270 metric tons (2500 short tons) per hour to permit daytime unloading.

Coal is weighed on belt scale #007 and tramp iron is removed by magnetic separator #008, each of which is contained

*Numbers refer to equipment numbers on the flowsheet and in the equipment list and equipment specifications in the Appendix (Chapter 10).

in transfer tower #009. Distributing conveyor #010 moves the coal onto an open storage pile approximately 25 x 145 meters (82 x 475 feet). This pile provides 2.6 days of "live" storage at capacity. Additional "dead" storage may be provided by transport to and from an adjacent area.

From the "live" storage pile two rotary plow feeders #011-A&B deliver the coal at 485 metric tons (535 short tons) per hour to reclaim conveyor #012, which delivers the coal to #013 conveyor. This conveyor feeds #014 belt scale, #015 magnetic separator, and surge bin #022 in the crusher-pulverizer house #021. From surge bin #022 two feeders #023-A&B feed crushers #024-A&B which feed pulverizers #025-A&B.

Conveyor #031 conveys the -149 micron, U.S. Sieve Series, (-100 mesh, Tyler Standard Screen Scale Sieve Series) pulverized coal to conveyor #032, which delivers the pulverized coal to four hoppers #033-A-D located at process trains #1 to #4, respectively.

Provision is made in the capital estimate, and will be made in the detail design, for dust control and fire protection.

The particle size distribution after pulverizing is assumed to be as shown in Table 12.

Table 12.

SIZE RANGE OF PULVERIZED COAL

Microns	(Mesh)	Weight Fraction
-149 +125	-100 +115	0.045 ± .003
-125 +105	-115 +150	0.065 ± .003
-105 +74	-150 +200	0.220 ± .004
- 74	-200	0.670 ± .004
TOTAL		1.000

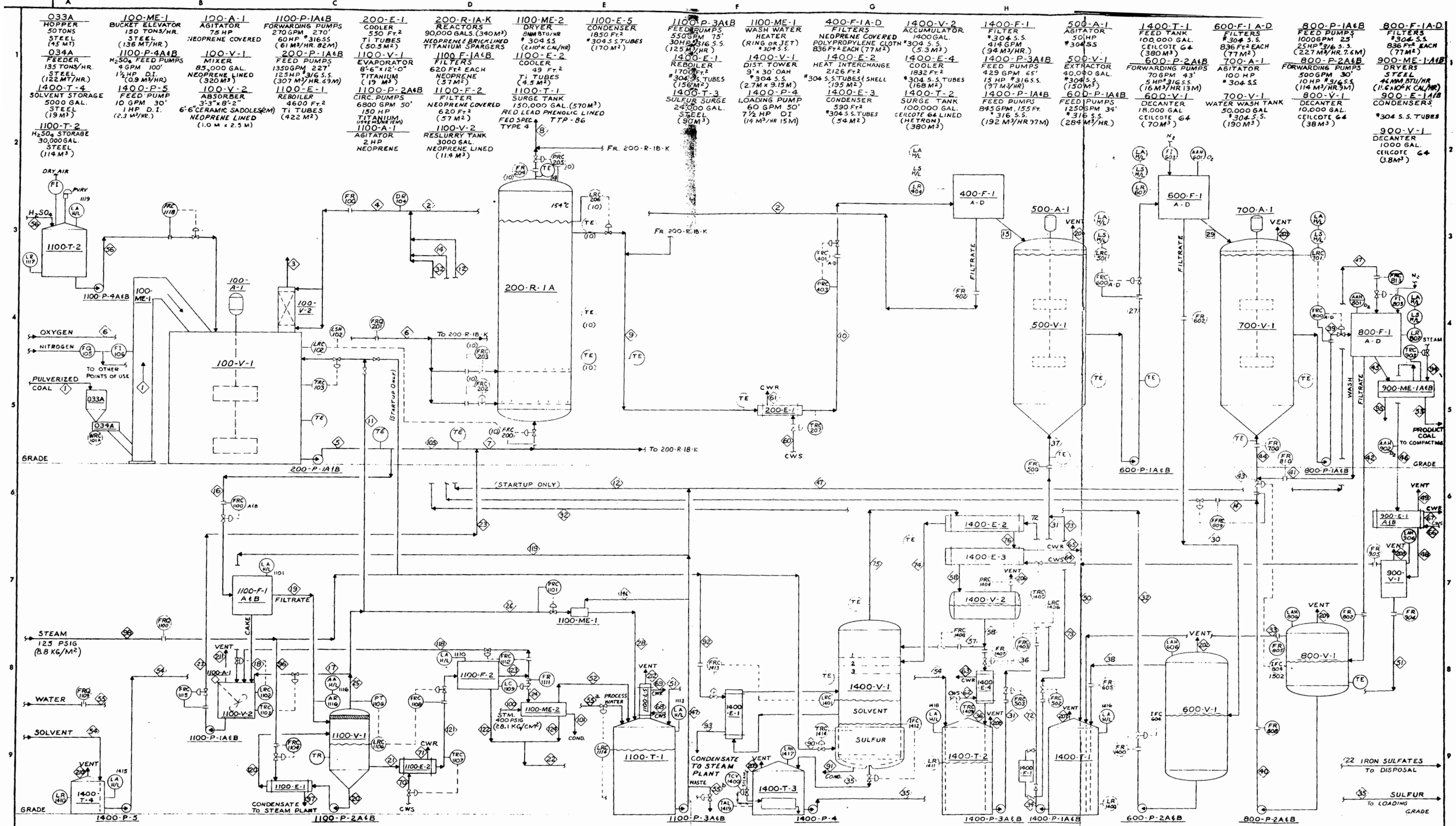

NOTES
ALL VENTS GO TO VENT SCRUBBER SEE B1-011-730623
ONE TRAIN SHOWN, FOUR TRAINS REQUIRED

Figure 13.

DESIGNED	E.F. HENSLEY	8-29-73	ORIGINAL B/M NO.
DRAWN	H.D. BOYCE	9-18-73	ORIGINAL DWG. ISSUED WITH
CHECKED			
APPROVED	E.F. Hensley	10/26/73	
NOTED			FOR BID PURPOSES ONLY ☐
MFG. REP.		10-31-73	FOR CONSTRUCTION ☐
			FOR REFERENCE ONLY ☐

DOW — DOW CHEMICAL U.S.A.

COAL-PYRITIC SULFUR REMOVAL

INDEX FLOWSHEET — SHT. 1 OF 1

JOB NUMBER	SCALE	
730623		B1-013-730623

REV. 5-21-75 HDB

REV. MARK	DWG. COORD.	REVISION	BY	DATE	APP.
A					

LEGEND - FLOWSHEET SYMBOLS

PIPE LINES

PROCESS & MAIN OPERATING LINES

AUXILIARY PROCESS & SERVICE LINES

EXISTING LINES, EQUIP. & INSTRS.

A — E

INDICATES CHANGE IN PIPING SPECIFICATION

PW-102-10"-A

- PIPING STD. OR SPEC.
- LINE SIZE
- LINE NUMBER
- LINE SERVICE DESIGNATION

VALVE SYMBOLS

	GATE VALVE		DIAPHRAGM VALVE
	GLOBE VALVE		BUTTERFLY VALVE
	BALL VALVE		CHECK VALVE
	NEEDLE VALVE		FUSIBLE-LINK SHUT-OFF
	PLUG COCK		
	3-WAY VALVE		
	TRANSFLOW VALVE		
	ANGLE VALVE		
	Y-VALVE		
T	FLUSH-MOUNTED VALVE		

USE PROPER VALVE SYMBOL

BD

BD	= BLOWDOWN	CW	= COOLING WATER
D	= DRAIN	PO	= PUMP OUT
SC	= SAMPLE CONN.	WO	= WASH OUT
SO	= STEAM OUT	V	= VENT

LINE ITEMS

FG *	FLOW GAGE (* = NUMBER)	LG *	LEVEL GAGE (* = NUMBER)
	HOSE CONNECTION		
	OPEN FUNNEL DRAIN		
	BLIND FLANGE OR SPACER WHEN REQUIRED		
	SPECTACLE BLIND		
	HAMER BLIND		
	Y-STRAINER (ABBREVIATION = STR. FOR FLOWSHEETS)		
TRP *	TRAP (* = NUMBER) (3/8" SQUARE)		
SP *	SPECIALTY ITEM (* = NUMBER) COVERED IN SPECIFICATIONS OR JOB INSTRUCTIONS (3/8" SQUARE)		

RUPTURE & SAFETY DEVICES

- PSV * — SAFETY RELIEF VALVE
- PRD * — PRESSURE RUPTURE DISC
- PVRD * — PRESSURE RUPTURE DISC VACUUM SUPPORTED

(* = NUMBER)

- PVRV * — PRESSURE-VACUUM RELIEF VALVE
- FA * / PVRV * — W/FLAME ARRESTOR
- ERV * — EMERGENCY RELIEF VENT

INSTRUMENT SYMBOLS

	LOCALLY MOUNTED INSTRUMENT 7/16" DIA. CIRCLE TYPICAL	F.C.	AIR OPERATED MOTOR VALVE FAIL CLOSED (WITH OR WITHOUT POSITIONER)
	PANEL MOUNTED INSTRUMENT	F.O.	AIR OPERATED MOTOR VALVE FAIL OPEN (WITH OR WITHOUT POSITIONER)
	INSTRUMENT OR DEVICE MOUNTED BACK OF PANEL	F.O.	AIR OPERATED MOTOR VALVE WITH POSITIONER, FAIL OPEN (OPTIONAL SYMBOL)
	PANEL MOUNTED INSTRUMENT FOR TWO SERVICES OR SINGLE INSTRUMENT WITH TWO FUNCTIONS	F	3-WAY VALVE FAIL OPEN IN DIRECTION OF ARROW
TR	MULTI-POINT TEMPERATURE RECORDER (OMIT SMALL CIRCLE FOR ELEMENT WITHOUT WELL)	F	3-WAY VALVE FAIL OPEN IN DIRECTION OF ARROW
TI	MULTI-POINT TEMPERATURE INDICATOR (OMIT SMALL CIRCLE FOR ELEMENT WITHOUT WELL)	F.I.	CYLINDER, DOUBLE-ACTING FAIL INTERMEDIATE
FT FE - FX -	ORIFICE PLATE WITH FLOW TRANSMITTER AND METER RUN	F.C.	CYLINDER, SINGLE-ACTING FAIL CLOSE
ZS	POSITION OR LIMIT SWITCH	S	SOLENOID-OPERATED VALVE
HS	HAND SWITCH PNEUMATIC OR ELECTRIC		PRESSURE REGULATOR WITH PILOT LINE (REVERSE PRESS. TAP FOR BACK PRESS. REGULATOR)
	ELECTRICAL OR THERMOCOUPLE LEADS		SELF-CONTAINED PRESSURE REGULATOR (REVERSE PRESS. TAP FOR BACK PRESS. REGULATOR)
	CAPILLARY TUBING		
	CONNECTING PROCESS OR AUXILIARY LINE		PILOT LIGHT
	INSTRUMENT AIR LINE		

INSULATION

C — EQUIPMENT NUMBER; WHEN INSULATED

LINE IDENT. — C - * — WHEN INSULATED

C * = INSULATED = CLASS

T*&C = TRACE & COVER; * = TRACING MEDIUM

C&W = COAT & WRAP; J - X = JACKET; X = OIA. JACKET

INSTRUMENT IDENTIFICATION

AE	ANALYSIS (pH V.P.C., O_2 ETC.) ELEMENT	LA*	LEVEL ALARM	TDR	TEMP. DIFFERENCE RECORDER
AR	ANALYSIS (pH V.P.C., O_2 ETC.) RECORDER	LC	LEVEL CONTROLLER (BLIND)	TDRC	TEMP. DIFFERENCE RECORDING CONTROLLER
ARC	ANALYSIS (pH V.P.C., O_2 ETC.) RECORDING CONTROLLER	LI	LEVEL INDICATOR	TDT	TEMP. DIFFERENCE TRANSMITTER
AT	ANALYSIS (pH V.P.C. O_2 ETC.) TRANSMITTER	LIC	LEVEL INDICATING CONTROLLER	TE	TEMPERATURE ELEMENT
BS	BURNER SWITCH (COMBUSTION SAFEGUARD)	LIT	LEVEL INDICATING TRANSMITTER	TI	TEMPERATURE INDICATOR
CE	CONDUCTIVITY ELEMENT (CELL)	LR	LEVEL RECORDER	TIC	TEMPERATURE INDICATING CONTROLLER
CR	CONDUCTIVITY RECORDER	LS*	LEVEL SWITCH	TIT	TEMPERATURE INDICATING TRANSMITTER
DR	DENSITY RECORDER	LT	LEVEL TRANSMITTER	TR	TEMPERATURE RECORDER
DT	DENSITY TRANSMITTER	ME	MOISTURE (HUMIDITY) ELEMENT	TRC	TEMPERATURE RECORDER CONTROLLER
EI	VOLTAGE INDICATOR (VOLTMETER)	MR	MOISTURE (HUMIDITY) RECORDER	TS*	TEMPERATURE SWITCH
EV	ELECTRIC VALVE (SOLENOID)	PA*	PRESSURE ALARM	TT	TEMPERATURE TRANSMITTER (BLIND)
E/P	EMF TO PNEUMATIC CONVERTER	PCV	PRESSURE CONTROL VALVE (SELF CONTAINED)	TW	TEMPERATURE TEST WELL (NO ELEMENT)
FA*	FLOW ALARM	PDR	PRESSURE DIFFERENTIAL RECORDER	UA	ANNUNCIATOR (MULTI-UNIT ALARM)
FE	FLOW ELEMENT (ORIFICE, VENTURI, ETC.)	PDRC	PRESSURE DIFFERENTIAL RECORDING CONTROLLER	WE	WEIGHT ELEMENT
FI	FLOW INDICATOR OR ROTAMETER	PDT	PRESSURE DIFFERENTIAL TRANSMITTER	WR	WEIGHT RECORDER
FIC	FLOW INDICATING CONTROLLER	PI	PRESSURE INDICATOR (GAUGE)	ZS	POSITION OR LIMIT SWITCH
FQ	FLOW INTEGRATOR (TOTALIZER)	P/I	PNEUMATIC TO CURRENT CONVERTER	AA *	ANALYSIS ALARM
FR	FLOW RECORDER	PIC	PRESSURE INDICATING CONTROLLER	IFC	INTERFACE CONTROLLER
FRC	FLOW RECORDING CONTROLLER	PIT	PRESSURE INDICATING TRANSMITTER		
FS*	FLOW SWITCH	PR	PRESSURE RECORDER		
FT	FLOW TRANSMITTER	PRC	PRESSURE RECORDING CONTROLLER		
FX	ORIFICE FLANGE OR METER RUN	PS*	PRESSURE SWITCH		
HC	HAND CONTROL, MANUAL LOADING STATION	PT	PRESSURE TRANSMITTER	"F"	RATIO-MODIFYING LETTER e.g., "FFIC" FLOW RATIO INDICATING CONTROLLER
HS	HAND SWITCH, AIR OR ELECTRICAL	QS	EVENT (OPERATION) SWITCH	"V"	"V" FOLLOWING FIRST LETTER OF INSTRUMENT IDENTIFICATION INDICATES FINAL CONTROL ELEMENT, e.g., CONTROL VALVE TV-101 IS OPERATED BY TRC-101.
I I	CURRENT INDICATOR (AMMETER)	QR	EVENT (OPERATION) RECORDER		
I/P	CURRENT TO PNEUMATIC CONVERTER	R/I	RESISTANCE THERMOMETER TO CURRENT CONVERTER		
JI	POWER INDICATOR (WATTMETER)	SI	SPEED INDICATOR (TACHOMETER)	"Y"	AUXILIARY DEVICE SUCH AS RELAY, SELECTOR, LIMIT OR COMPUTE
KC	TIME OR TIME SCHEDULE CONTROLLER	ST	SPEED TRANSMITTER (GENERATOR)	*	INSERT "H," "L," or "H/L" TO INDICATE "HIGH," "LOW," OR "HIGH-LOW" RESPECTIVELY
		TA*	TEMPERATURE ALARM		
		TCV	TEMP. CONTROL VALVE (SELF CONTAINED)		

PIPE LINE IDENTIFICATION

LINE SERVICE DESIGNATIONS

CODE	DESCRIPTION

LINE SPECIFICATIONS

CODE	SPEC. NO.	DESCRIPTION

GENERAL NOTES

REV. MARK	DWG. COORD.	REVISION	BY	DATE	APP.
A					

REV. MARK	DWG. COORD.	REVISION	BY	DATE	APP.

REV. MARK	DWG. COORD.	REVISION	BY	DATE	APP.

ORIGINAL B/M NO.

-92-

Figure 14.

DESIGNED	E. F. HENSLEY	6-26-74
DRAWN	R. A. MUDD	6-27-74
CHECKED		
APPROVED	E. F. Hensley	10/31/74
NOTED		
MFG. REP.	W. Mckenna	10/31/74

ORIGINAL DWG. ISSUED WITH

FOR BID PURPOSES ONLY
FOR CONSTRUCTION
FOR REFERENCE ONLY

DOW — THE DOW CHEMICAL COMPANY

COAL - PYRITIC SULFUR REMOVAL
LEGEND SHEET

PROCESS FLOWSHEET — SHT. 1 OF 1

JOB NUMBER	SCALE	
730623		BI-014-730623

PRINTED 5-21-75

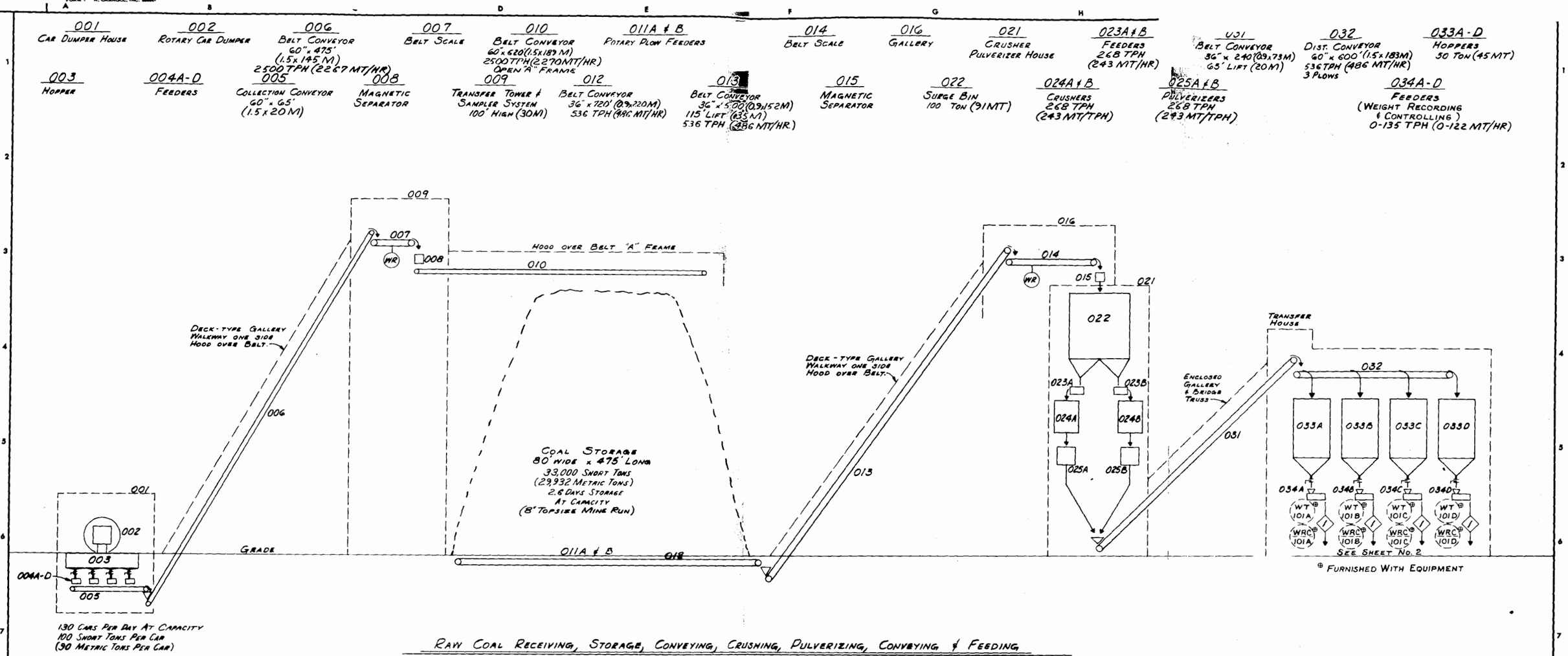

Raw Coal Receiving, Storage, Conveying, Crushing, Pulverizing, Conveying & Feeding

System As Shown Feeds Four Process Trains

Note
Additional Coal Storage May Be Provided By Transport To "Dead" Storage Adjacent To Developed Site See B2-001-730623

Figure 15.

Designed	E. F. Hensley	
Drawn	W. L. Comer	12-27-78
Checked		
Approved	E. F. Hensley	10/31/74
Noted		
Mfg. Rep.	W. McKinney	10/31/74

Original B/M No.

Original Dwg. Issued With

For Bid Purposes Only
For Construction
For Reference Only

DOW CHEMICAL U.S.A.

Coal - Pyritic Sulfur Removal
Feed Coal Preparation - Sector 000

Process Flowsheet — Sht. 1 of 12

Job Number 730623 | Scale | B1-001-730623

Rev. 5-21-75

Revision | Revision | Revision

4.5.2 Mixing - Sector 100:

(Figure 16, Process Flowsheet #2)

Stream #1, -100 mesh pulverized coal, from hopper #033-A and weight recording-controlling feeder #034-A feeds elevator #100-ME-1, which feeds #100-V-1 mixing tank of 320 cubic meters (85,000 gallons) capacity.

Wetting of the pulverized coal with leach solution is accomplished by proper geometry of the vessel and proper agitator design. Baffles in the lower portion of the vessel only allow the upper turbine of the agitator to create a vortex which induces the fine coal into the leach solution. The lower turbine and the baffles in the lower portion of the vessel ensure good mixing.

Approximately 14% of the FeS_2 is leached during the one hour residence time in the mixing tank at 102°C (215.6°F).

Stream #4, a composite of Streams #32, #14, #12, and #2 subsequently described, provides the leach solution.

Vent scrubber #100-V-2 prevents coal fines from being vented from the mix tank.

Stream #11, steam from Stream #25 subsequently described in Sector 1100, provides the necessary heat to maintain proper leaching temperature in #100-V-1. Stream #3, the vent from scrubber #100-V-2, goes to a vent scrubbing system subsequently described in Sector 1500.

Sulfuric acid, required to compensate for the sulfuric acid lost with the waste iron sulfates, is fed from #1100-T-2,

114 M^3 (30,000 gallons) steel via 1-1/2 horsepower ductile iron pumps #1100-P-4 A&B (one spare) to #100-V-1, via stream #56.

4.5.3 Reaction - Sector 200:

(Figure 16, Process Flowsheet #2)

Stream #5, coal and sulfates slurry, from mixing tank #100-V-1 previously described, is pumped by #316 stainless steel, 125 HP centrifugal pumps #200-P-1 A&B (one spare) to ten reactors #200-R-1 A thru K (I is omitted). Streams #16 and #23 to and from the iron sulfate removal step are subsequently described in Sector 1100.

Each reactor has a 4 meter (13' - 1-1/2") diameter, measured inside of the brick lining, and a 27 meter (88'-6") straight side, with hemispherical top head and elliptical bottom head. The reactor shell is steel, lined with 6.35 mm (1/4") neoprene and 114.3 mm (4-1/2") of acid brick. The acid brick provides thermal insulation to protect the neoprene lining.

Stream #6, 99.5 volume percent pure oxygen, is fed to two titanium spargers for distribution into the slurry.

The volume inside of the brick lining is 340 cubic meters (90,000 gallons) including 75 cubic meters (20,000 gallons) for foam disengagement should this be necessary.

The exothermic reaction results in a temperature rise from 102°C (215.6°F) to 151.6°C (304.9°F).

Inerts are vented via stream #8 to the vent scrubbing system subsequently described.

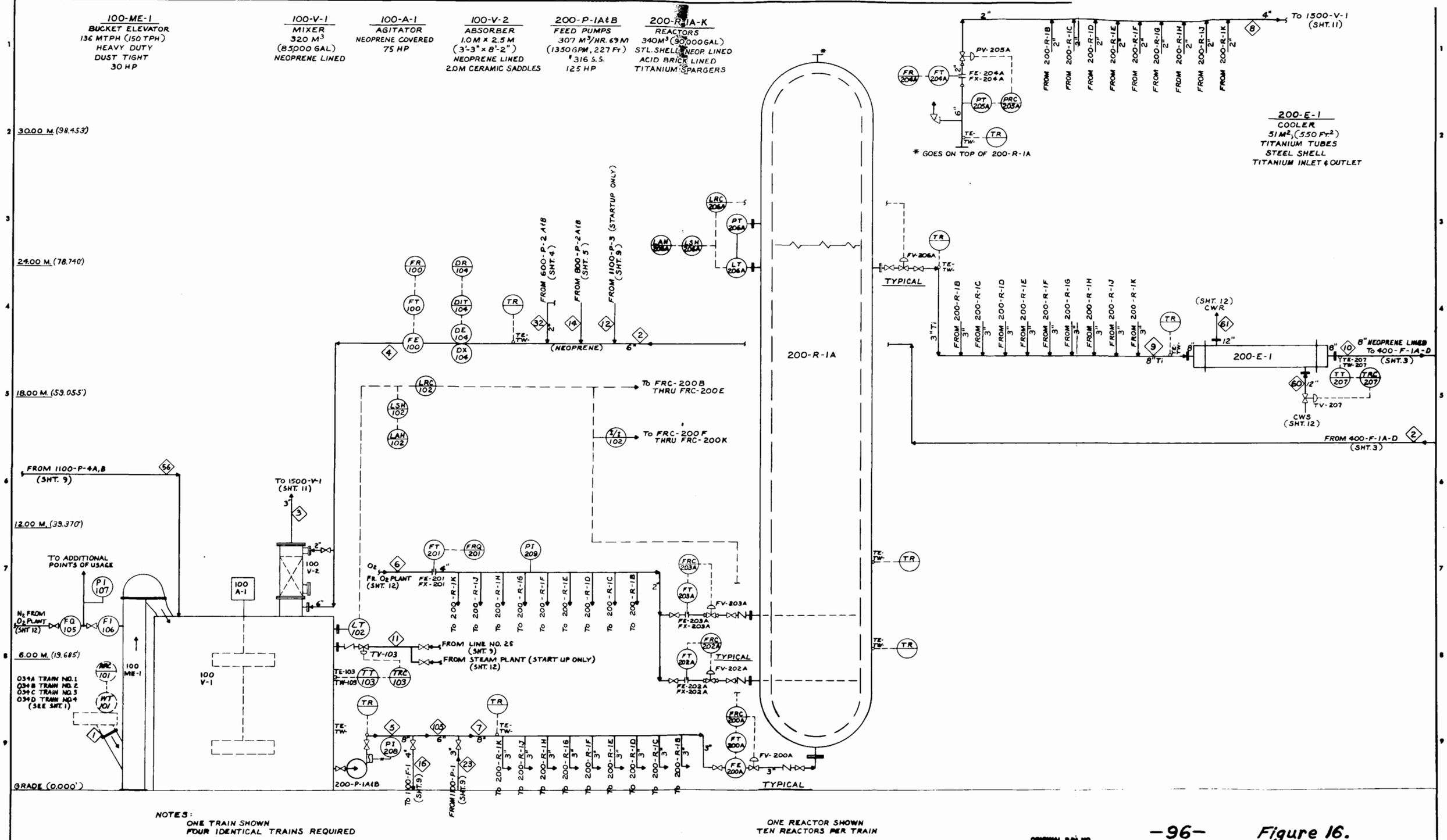

Figure 16.

DOW CHEMICAL U.S.A.

COAL-PYRITIC SULFUR REMOVAL
MIXING & REACTION - SECTORS 100 & 200

PROCESS FLOWSHEET — SHT. 2 OF 12

DESIGNED	E.F. HENSLEY	
DRAWN	H.D. BOYCE	2-18-74
CHECKED		
APPROVED	E.F. Hensley	1/8/74
NOTED		
MFG.	Wm Schuno	10/31/74

FOR BID PURPOSES ONLY
FOR CONSTRUCTION
FOR REFERENCE ONLY

JOB NUMBER 730623 | SCALE | BI-002-730623

REV. 8-21-75

REVISION

The reactor product, Stream #9, with >95% of the FeS_2 converted, goes to cooler #200-E-1, composed of 50 square meters (550 square feet) of titanium tube surface, where it is cooled to 102°C (215.6°F).

4.5.4 Filtration - Sector 400:

(Figure 17, Process Flowsheet #3)

The reactor product, at 102°C (215.6°F) from #200-E-1 cooler, Stream #10, is fed to four rotary vacuum drum filters #400-F-1 A-D where the coal is removed from the mixed acid sulfate solution. Each filter has 77 square meters (836 square feet) of filter area. The filters are of neoprene lined construction with polypropylene filter cloth. When all four filters are in service a filter rate of 1.0 cubic meters of feed per hour per square meter of filter area (0.4 gallons per minute per square foot) is adequate. When only three filters are in service, as would be the case when one filter is shut down for maintenance, a 33% increase in throughput for each filter would be needed. Each filter is furnished with a vacuum pump, filtrate receiver, 2 filtrate pumps (1 spare), level control, and high and low pan level switches.

Filtrate containing ferrous and ferric sulfates and sulfuric acid from the four filters, Stream #2, is returned to the mixing tank #100-V-1 via Stream #4.

The coal filter cakes from the four filters discharge into conveyor #400-ME-1, Stream #15, where they are carried into the extractor #500-V-1 described in the following sector.

4.5.5 Extraction - Sector 500:

(Figure 18, Process Flowsheet #4)

Stream #15, coal filter cake from conveyor #400-ME-1, is discharged into #500-V-1, a 150 cubic meter (40,000 gallon) extractor of #304 stainless steel with a 50 horsepower agitator also of #304 stainless steel.

Naphtha containing approximately 1.2% sulfur, Stream #37, is fed to the extractor. Stream #37 is composed of Streams #31 and #73 described later in Sector 1400.

Stream #201 is the vent from the extractor to the vent scrubbing system described later in Sector 1500.

Stream #27, the coal-naphtha slurry, containing the sulfates carried over in the filter cake, Stream #15, is fed via pump #600-P-1 to process filtration described in the following sector.

4.5.6 Filtration and Decantation - Sector 600:

(Figure 18, Process Flowsheet #4)

Stream #27, pumped by 25 HP, #316 stainless steel centrifugal pumps #600-P-1 A&B (one spare), is fed to four rotary vacuum filters #600-F-1 A-D where the coal is removed from the naphtha and residual sulfates. Each filter has 77 square meters (836 square feet) of filter area. The filters are of #304 stainless steel construction with #304 wire mesh filter media. When all four filters are in service the filter rate is 0.92 cubic meters of feed per hour per square meter of filter area (0.37 gallons of feed per minute per square foot). With three filters in service

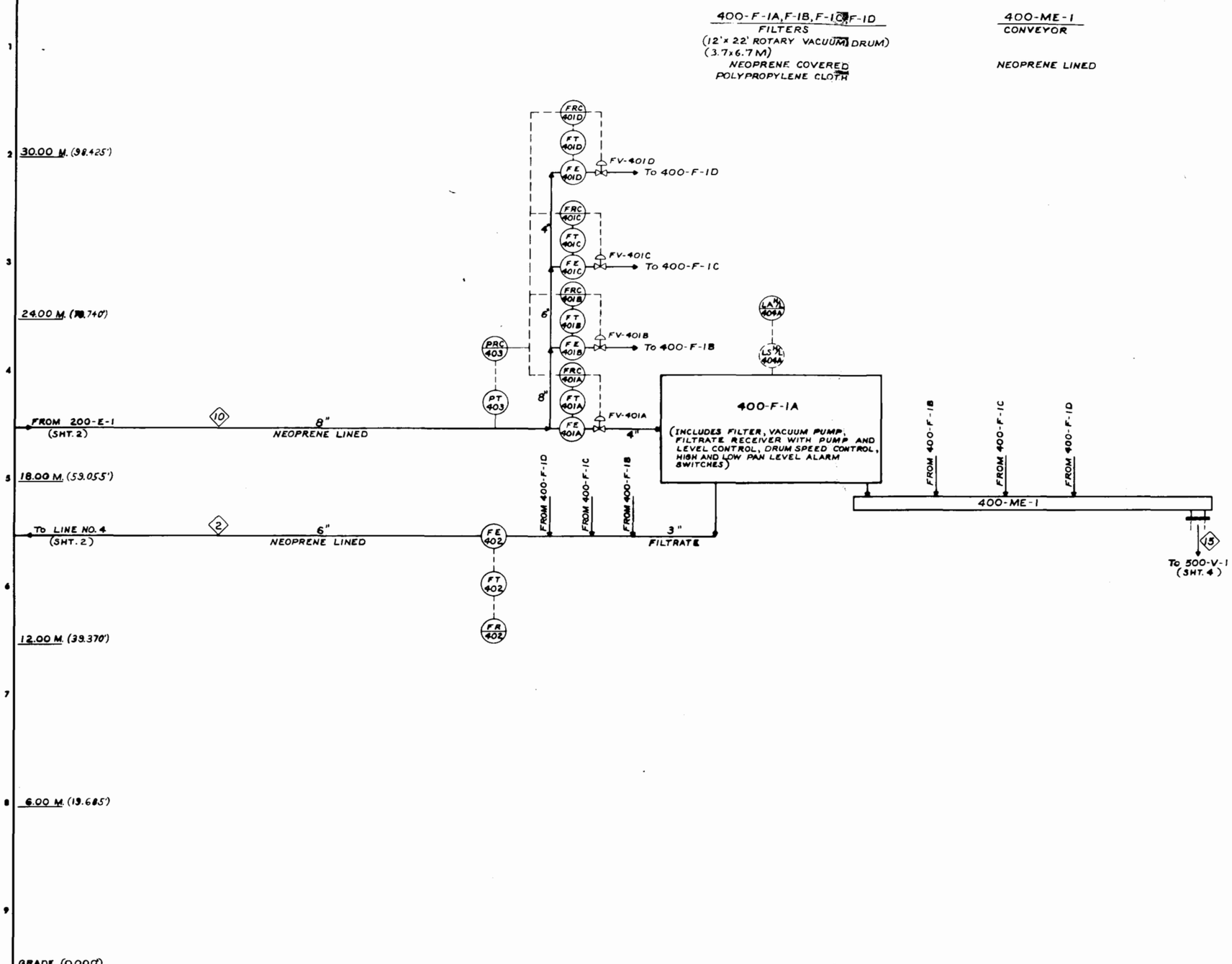

NOTE:
ONE TRAIN SHOWN
FOUR IDENTICAL TRAINS REQUIRED

-99-

Figure 17.

DESIGNED	E.F. HENSLEY	
DRAWN	H.D. BOYCE	2-28-74
CHECKED		
APPROVED	E.F. Hensley	10/31/74
NOTED		
MFG. REF.	D. McKinney	10/31/74

ORIGINAL DWG. ISSUED WITH

FOR BID PURPOSES ONLY
FOR CONSTRUCTION
FOR REFERENCE ONLY

DOW CHEMICAL U.S.A.

COAL- PYRITIC SULFUR REMOVAL
FILTRATION No. 1 - SECTOR 400

PROCESS FLOWSHEET — SHT. 3 OF 12

JOB NUMBER 730623 — SCALE — B1-003-730623

PRINTED 5-21-75

REVISION — REVISION — REVISION

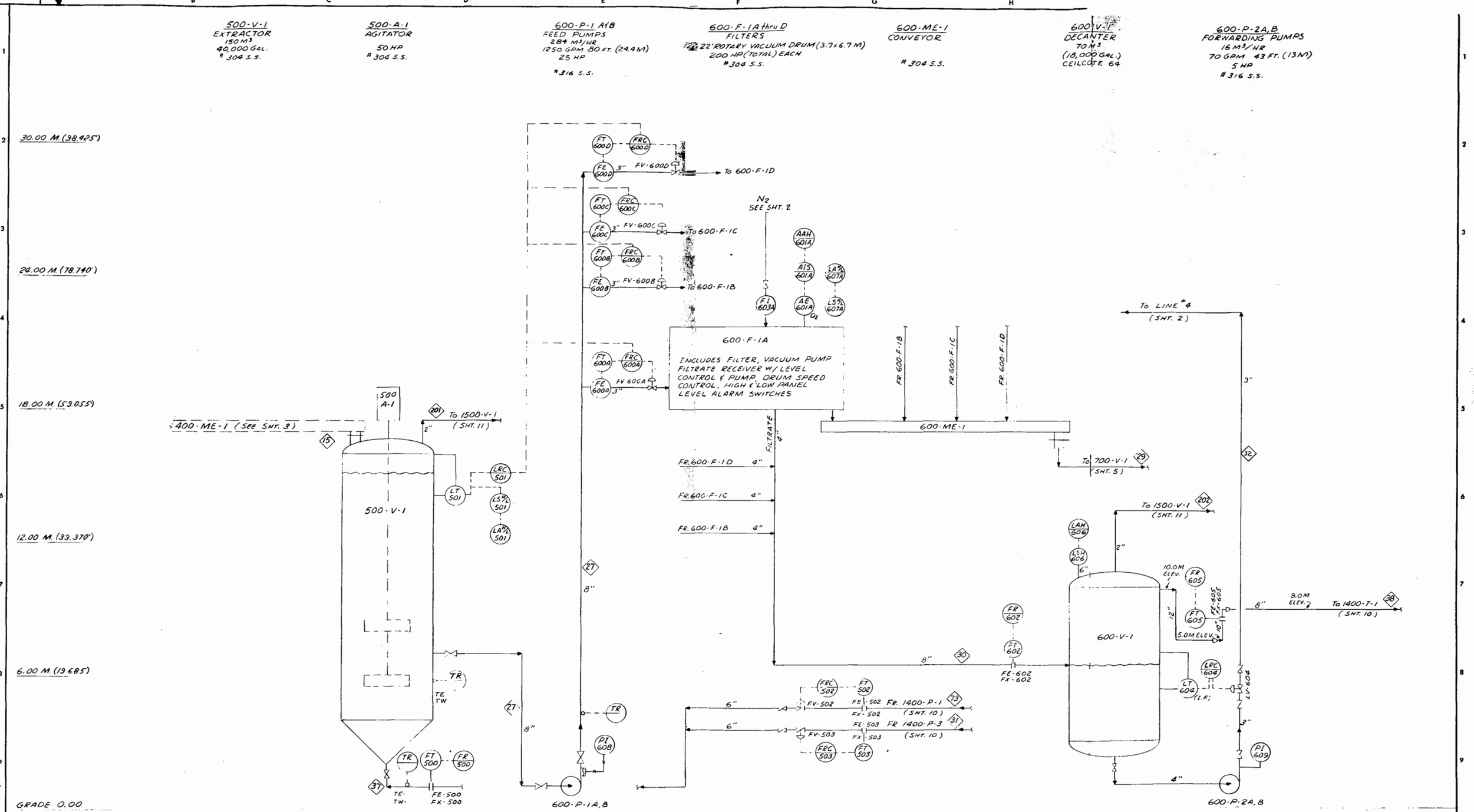

-100-

Figure 18.

ORIGINAL B/M NO.

DESIGNED	E.F. HENSLEY	
DRAWN	D.G. HIERHOLZER	3/74
CHECKED		
APPROVED		9/31/74
NOTED		
MFG. REP.		10/5/74

ORIGINAL DWG. ISSUED WITH

FOR BID PURPOSES ONLY
FOR CONSTRUCTION
FOR REFERENCE ONLY

DOW CHEMICAL U.S.A.

COAL PYRITIC SULFUR REMOVAL

EXTRACTION, FILTRATION, DECANTATION - SECTORS 500 & 600

PROCESS FLOWSHEET

SHT. 4 OF 12

JOB NUMBER 730623 | SCALE | B1-004-730623

PRINTED REV. 5-21-75 HDB

REV. DWG. MARK COORD. | REVISION | BY DATE APP.

the filter rate is increased one third. Each filter is furnished with vacuum pump, filtrate receiver, two filtrate pumps (one spare), level control, and high and low pan level switches.

Filtrate, naphtha and residual sulfates, Stream #30, are fed to #600-V-1 decanter, 68 cubic meter (18,000 gallons) steel vessel with Ceilcote #64 polyester lining.

The aqueous sulfate layer, Stream #32, is pumped by 5 HP, #316 stainless steel centrifugal pumps #600-P-2 A&B (one spare) to the mixing tank #100-V-1 via Stream #4 described in Sector 100.

The organic layer of naphtha containing 2.3 weight percent sulfur, Stream #38, flows by gravity to #1400-T-1 still feed tank described later in Sector 1400.

The coal filter cake from the four filters is discharged onto conveyor #600-ME-1 as Stream #29, which is discharged into #700-V-1 water wash tank described in the following sector.

4.5.7 Water Washing - Sector 700:

(Figure 19, Process Flowsheet #5)

Stream #29, coal filter cake from conveyor #600-ME-1, is discharged into #700-V-1 water wash tank containing 190 cubic meters (50,000 gallons) by volume and made of #304 stainless steel with a 100 horsepower agitator, also of #304 stainless steel.

Wash water, Stream #44, composed of 1.9% sulfates, 1.6% naphtha, and 96.5% water, is fed to the mixing tank. Stream #44 is produced from Streams #43 and #41 described in the following sector.

Stream #39, water-coal slurry, is pumped by pumps #800-P-1 A&B (one spare) described in the following sector.

4.5.8 Filtration and Decantation - Sector 800:

(Figure 19, Process Flowsheet #5)

Stream #39, water-coal slurry, is pumped by 25 horsepower, #316 stainless steel centrifugal pumps #800-P-1 A&B (one spare) to four rotary vacuum drum filters #800-F-1 A-D where the coal is removed from the water in the feed and washed with hot water, Stream #47, from pumps #1100-P-3 A&B described in Sector 1100. Each filter has 77 square meters (836 square feet) of filter area. Filters are of #304 stainless steel with #304 wire mesh filter media.

When all four filters are operating the filter rate is 0.74 cubic meters of feed per hour per square meter of filter area (0.3 gallons of feed per minute per square foot). When only three filters are in service the filter rate is increased one third. Each filter is furnished with vacuum pump, filtrate and wash receivers, 2 filtrate pumps, 2 wash pumps (one spare each), level controls on receivers, and high and low pan level switches.

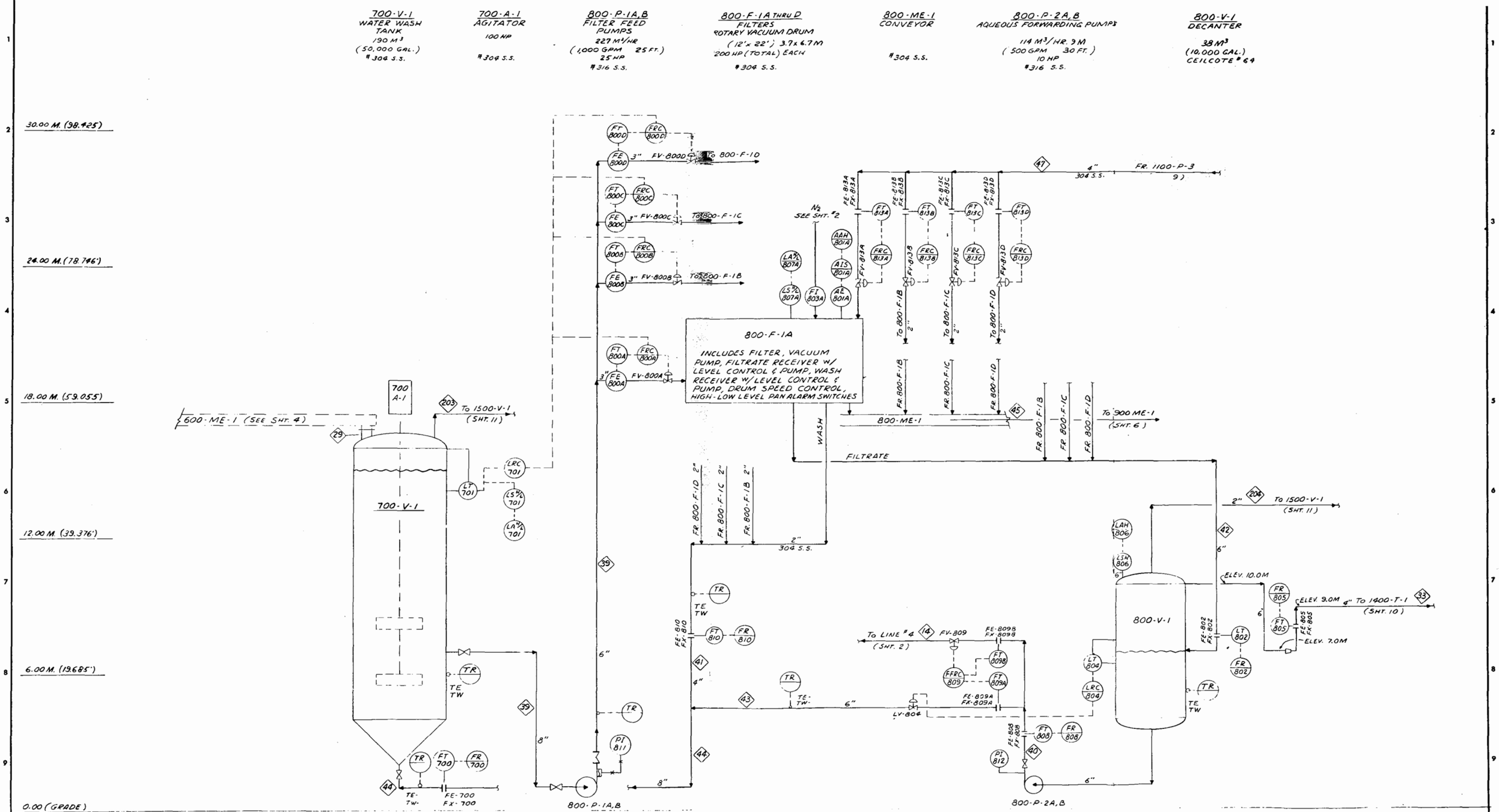

-103-

Figure 19.

DESIGNED	E. F. HENSLEY
DRAWN	D.G. HIERHOLZER 3/1/74
CHECKED	
APPROVED	10/31/74
NOTED	
MFG. REP.	10/31/74

ORIGINAL B/M NO.

ORIGINAL DWG. ISSUED WITH

FOR BID PURPOSES ONLY ☐
FOR CONSTRUCTION ☐
FOR REFERENCE ONLY ☐

DOW CHEMICAL U.S.A.

COAL - PYRITIC SULFUR REMOVAL

SECTORS 700/800 WATER WASHING, FILTRATION, DECANTATION

PROCESS FLOWSHEET SHT. 5 of 12

JOB NUMBER	SCALE	
730623		BI-005-730623

PRINTED REV. 8-21-75 HDB

REV.	DWG. MARK	COORD.	REVISION	BY	DATE	APP.

Filtrate composed of 2% sulfates, 13% naphtha, and 85% water, Stream #42, is fed to #800-V-1 decanter, 38 cubic meters (10,000 gallons) steel lined with Ceilcote #64.

The aqueous layer composed of 2.3% sulfates and 97.7% water, Stream #40, is split into Stream #14, which goes to #100-V-1 mixing tank via Stream #4 described in Sector 100, and Stream #43. Stream #41, wash water from the filters, is 93.5% water, 5.3% naphtha, and 1.2% sulfates.

Streams #43 and #41 are combined into Stream #44, the wash water to the extractor #700-V-1, as described in the previous sector.

The organic layer, Stream #33, composed of 2.34% sulfur and 97.66% naphtha, travels by gravity to still feed tank #1400-T-1 described in Sector 1400.

The washed coal filter cake from the four filters is discharged onto conveyor #800-ME-1, Stream #45, which feeds the coal driers #900-ME-1 A&B, described in the following sector.

4.5.9 Drying and Decantation - Sector 900:

(Figure 20, Process Flowsheet #6)

Stream #45, washed coal filter cake from conveyor #800-ME-1 described in the preceding sector, is split and feeds two drying and solvent recovery systems #900-ME-1 A&B. The coal is dried in a nitrogen atmosphere under positive pressure to avoid air in-leakage and resultant fire hazard.

Condensed water and naphtha from the dryer condensate receivers, Stream #48, flows to #900-V-1 decanter of 3.8 cubic meters (1000 gallons) volume. The water layer, Stream #51, flows by gravity to #1100-T-1 surge tank described in Sector 1100. The naphtha layer, Stream #50, flows by gravity to #1400-T-1 still feed tank described in Sector 1400.

The dried coal, Stream #53, from the dryers is fed to conveyors #900-ME-2A (from dryer #900-ME-1A) and #900-ME-2B (from dryer #900-ME-1B) discharging to conveyor #900-ME-3, which feeds the compactor described in the following paragraph.

4.5.10 Compacting - Sector 900:

(Figure 21, Process Flowsheet #7)

Dried coal from conveyor #900-ME-3 is fed to a 7.6 M (25 foot) diameter rotating disk compactor #900 ME-4. Lignin sulfonate binder is unloaded via 5 HP ductile iron pumps #900-P-2 A&B (one spare) into a 1136 M^3 (300,000 gallons) steel tank #900-T-1 and pumped by 1 HP ductile iron pumps #900-P-1 A&B (one spare) to #900-ME-4 compactor. Pellets of 13 to 38 mm (1/2" to 1-1/2") are formed and dropped into elevator #900-ME-5, which discharges onto conveyor #1001 described in the following sector.

4.5.11 Product Coal Handling - Sector 1000:

(Figure 22, Process Flowsheet #8)

Dried and compacted coal, 95% pyrite-free with 4% moisture, from elevator #900-ME-5 in each of the four process trains is discharged onto conveyor #1001, and then is loaded into

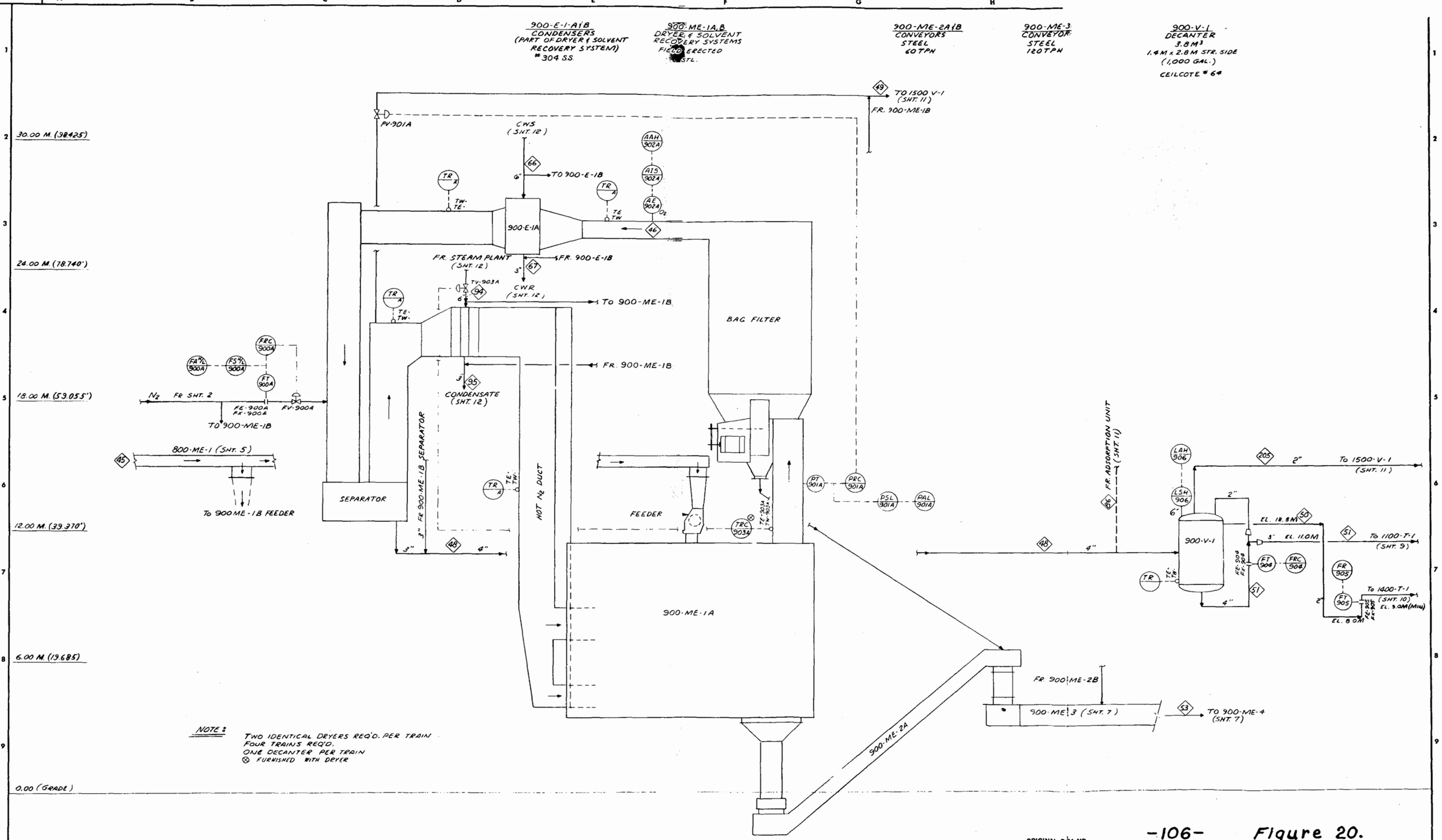

-106-

Figure 20.

ORIGINAL B/M NO.

DESIGNED	E.F. HENSLEY	
DRAWN	D.G. HIERNOLZER	3 4 74
CHECKED		
APPROVED		10/3/74
NOTED		
MFG. REP.		10/31/74

ORIGINAL DWG. ISSUED WITH

FOR BID PURPOSES ONLY ☐
FOR CONSTRUCTION ☐
FOR REFERENCE ONLY ☐

DOW CHEMICAL U.S.A.

COAL PYRITIC SULFUR REMOVAL
DRYING & DECANTATION SECTOR 900

PROCESS FLOWSHEET — SHT. 6 OF 12

JOB NUMBER	SCALE	
730623		B1-006-730623

PRINTED REV. 5-21-75 HDB

REV.	DWG. MARK COORD.	REVISION	BY	DATE	APP.
A					

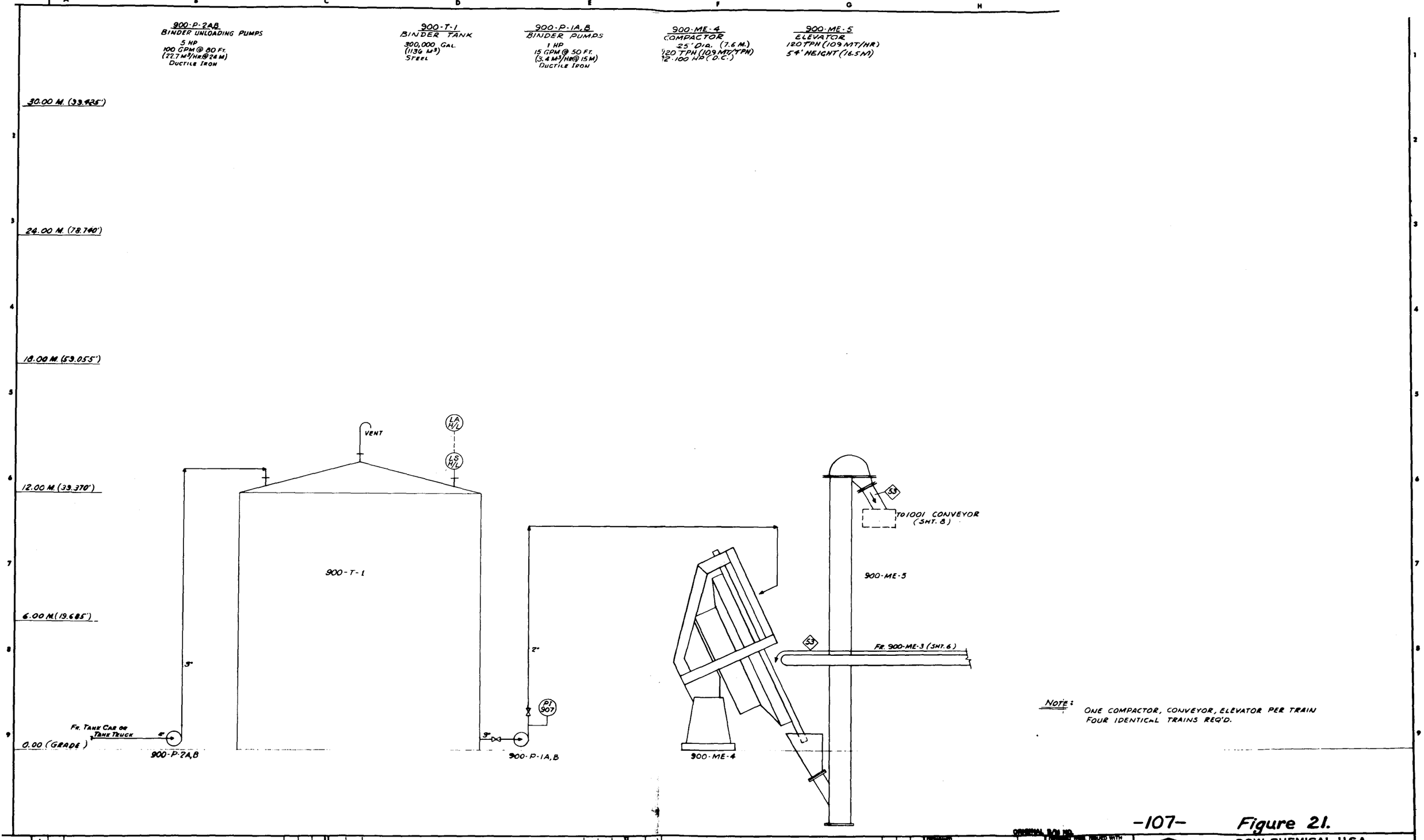

NOTE: ONE COMPACTOR, CONVEYOR, ELEVATOR PER TRAIN
FOUR IDENTICAL TRAINS REQ'D.

-107-

Figure 21.

DESIGNED	E.F. HENSLEY
DRAWN	D.G. HIERHOLZER 3 5 74
CHECKED	
APPROVED	E.F. Hensley 10/31/74
NOTED	
MFG. REP.	[signature] 10/31/74

ORIGINAL B/M NO.

ORIGINAL DWG. ISSUED WITH

FOR BID PURPOSES ONLY
FOR CONSTRUCTION
FOR REFERENCE ONLY

DOW CHEMICAL U.S.A.

COAL - PYRITIC SULFUR REMOVAL
COMPACTING - SECTOR 900

PROCESS FLOWSHEET SHT. 7 OF 12

JOB NUMBER 730623 | SCALE | B1-007-730623

PRINTED 5-21-75

REVISION | REVISION | REVISION

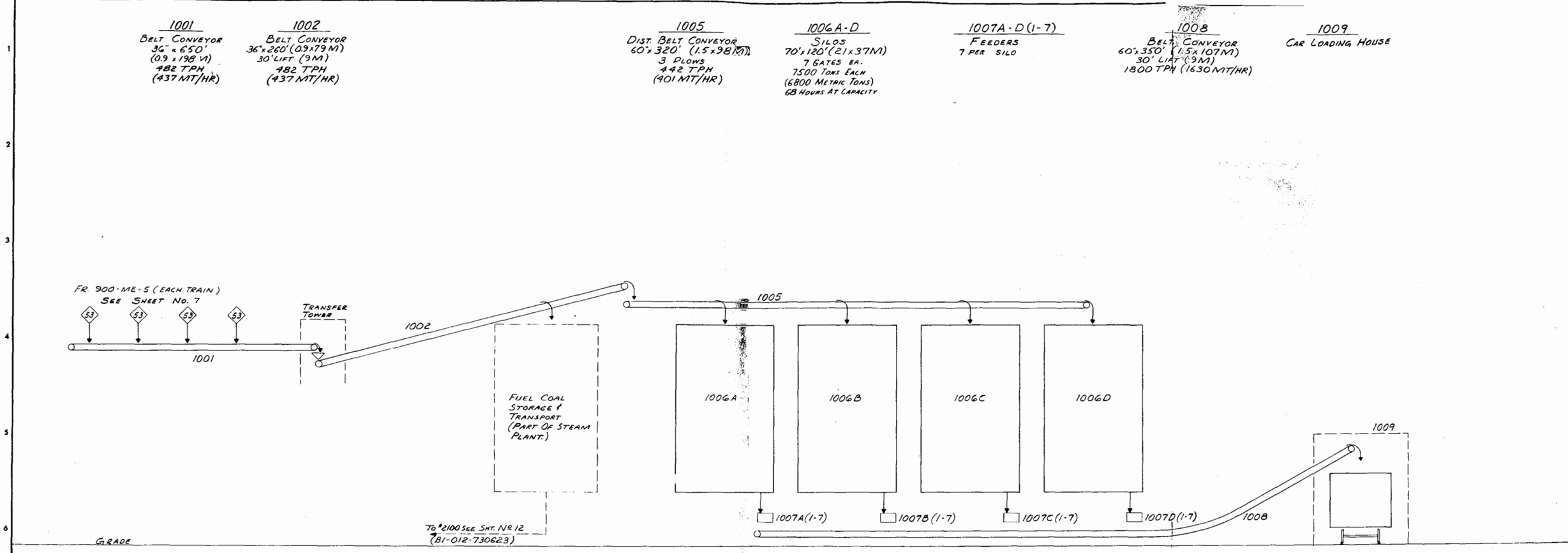

Product Coal Collecting, Conveying, Storage & Loading

System As Shown Receives From Four Process Trains

-108-

Figure 22.

ORIGINAL B/M NO.

DESIGNED	E. F. Hensley	
DRAWN	W. L. Comer	12 28 73
CHECKED		
APPROVED	E. F. Hensley	10/31/74
NOTED		
MFG. REP.	W. McKeever	10/31/74

ORIGINAL DWG. ISSUED WITH

FOR BID PURPOSES ONLY
FOR CONSTRUCTION
FOR REFERENCE ONLY

DOW CHEMICAL U.S.A.

Coal - Pyritic Sulfur Removal

Product Coal Handling - Sector 1000

Process Flowsheet

Sht. 8 of 12

JOB NUMBER 730623

SCALE

B1-008-730623

REV. 5-21-75 HDE

REVISION

REV. DWG. MARK COORD. BY DATE APP.

silos #1006 A-D via conveyors #1002 and #1005. The reinforced concrete silos are 21.3 meters diameter by 36.5 meters high (70 feet by 120 feet). Each hopper provides 6800 metric tons (7500 short tons) storage or 64 hours for each process train at capacity.

Seven feeders #1007 A-D(1-7) under each hopper feed the product coal to conveyor #1008 at 1630 metric tons per hour (1800 short tons per hour) to the car loading house #1009. This rate allows car loading of 9070 metric tons (10,000 short tons) during the day shift.

4.5.12 Iron Sulfates Removal - Sector 1100:
(Figure 23, Process Flowsheet #9)

Stream #16 described in Sector 200 is fed to two rotary vacuum drum filters #1100-F-1 A&B where the coal is removed from the sulfate solution. Each filter has 57 square meters (620 square feet) of filter area. The filters are neoprene lined construction with polypropylene filter cloth. The filter rate is 1.06 cubic meters per hour per square meter (0.43 gallons per minute per square foot) of filter area. Each filter is furnished with a vacuum pump filtrate receiver, 2 filtrate pumps (one spare), level control, and high and low pan level switches.

Stream #18, coal filter cake, is discharged into #1100-V-2 reslurry tank, 11.4 cubic meters (3000 gallons) volume, neoprene lined, with a 2 horsepower, neoprene covered agitator, #1100-A-1.

Filtrate from the above filters is fed to #1100-V-1 concentrator, 19 cubic meters (5000 gallons) volume, titanium or titanium clad. Reboiler #1100-E-1 has 422 square meters (4600 square feet) of titanium tube surface heated with 8.8 kg/cm^2 (125 psig) steam.

Stream #25, vapor from the above concentrator, splits into Stream #26, which feeds #1100-ME-1 water heater described later, and Stream #11, which goes to #100-V-1 mixer described in Sector 100 and Stream #17, which goes to reslurry tank #1100-V-2 described above.

Stream #21, concentrated sulfates, travels to #1100-E-2 cooler, 4.5 square meters (49 square feet) of titanium tube surface, and is cooled from 143.3°C (290°F) to 102°C (215°F) and becomes Stream #121.

Stream #121 feeds #1100-F-2 filter, identical to filter #1100-F-1 A or B. The cake from the filter, Stream #122, is rich in ferrous sulfate and is part of the iron sulfates waste.

The filtrate from the above filter, Stream #123, is split into streams #24 and #118.

Stream #24 is fed to #1100-ME-2 evaporator-dryer and evaporated to dryness. This stream is rich in ferric sulfate and is the balance of the iron sulfates waste.

FORM 1 KANE 10 1288 3-74 69742

1100-P-1 A&B	1100-F-1 A&B	1100-V-2	1100-A-1	1100-E-1	1100-P-2 A&B	1100-V-1	1100-E-2	1100-T-2	1100-P-4 A&B	1100-ME-1	1100-T-1	1100-ME-2	1100-E-5	1100-P-3 A&B	1100-F-2
Slurry Pumps	Filters	Reslurry Tk.	Agitator	Reboiler	Circulating Pumps	Evaporator	Cooler	98% H_2SO_4 Storage Tk.	H_2SO_4 Feed Pumps	Water Heater	Water Surge Tk.	Evaporator-Dryer	Condenser	Pumps	Filter
61 m^3/Hr.	57 m^2 (Each)	11.4 m^3	2 H.P.	422 m^2	1545 m^3/Hr.	19 m^3	4.5 m^2	114 m^3	0.9 m^3/Hr. 31M	Ring or Jet	570 m^3	#304 S.S.	170 m^2	125 m^3/Hr. 23M	57 m^2
(270 GPM 270 FT.)	(10'x20' Rotary Vac Drum)	(3000 Gal.)	Neoprene Covered	(4600 Sq. Ft.)	(6800 GPM 50 FT.)	(5000 Gal.)	(49 Sq. Ft.)	(30,000 Gal.)	(4 GPM 100 FT.)	# 304 S.S.	(150,000 Gals.)	8MM BTU/HR	(1850 Sq. Ft.)	(550 GPM 75 FT.)	(10'x20' Rotary Vac Drum)
#316 S.S.	Neoprene Covered	Neoprene Lined		Titanium Tubes	Titanium	Titanium	Titanium Tubes	Steel	1½ H.P.		Redlead Phenolic Lined	(2×10^6 K Cal/HR)	#304 S.S. Tubes	#316 S.S.	Neoprene Covered
60 H.P.	150 H.P. (Total) Each				150 H.P.				Ductile Iron		Fed Spec TTP-86 Type 4			30 H.P.	150 H.P.

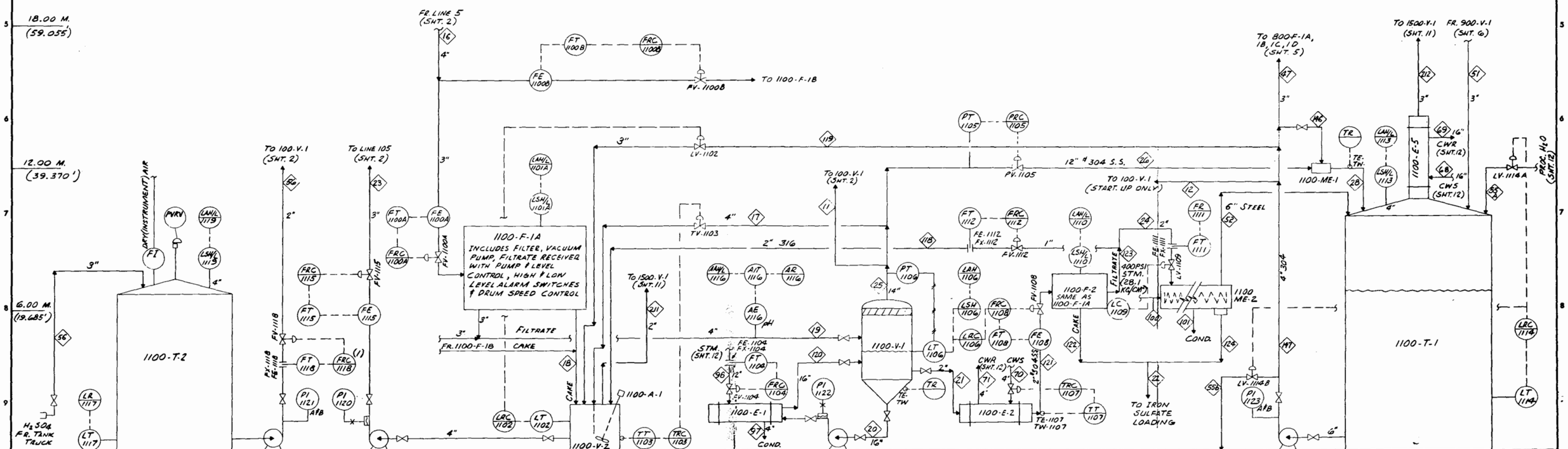

(1) FRC-1118 Is Manually Set To Maintain Proper PH On AR-1116

NOTE: THIS PROCESS STEP IS BASED ON PRELIMINARY DATA & ASSUMPTIONS. PROCESS RESEARCH & DEVELOPMENT IS NEEDED BEFORE THIS PROCESS STEP CAN BE FINALIZED

-111-

Figure 23.

REV. MARK	DWG. COORD.	REVISION	BY	DATE	APP.

ORIGINAL B/M NO.

DESIGNED	E.F. HENSLEY	
DRAWN	D.M. MILLER	6-25-74
CHECKED		
APPROVED		10/8/74
NOTED		
MFG. REP.		11/1/74

ORIGINAL DWG. ISSUED WITH

FOR BID PURPOSES ONLY
FOR CONSTRUCTION
FOR REFERENCE ONLY

DOW CHEMICAL U.S.A.

COAL - PYRITIC SULFUR REMOVAL
IRON SULFATES REMOVAL - SECTOR 1100
PROCESS FLOWSHEET SHT. 9 of 12

JOB NUMBER	SCALE	
730623		BI-009-730623

PRINTED REV. 5-21-75 HD.

It is of the utmost importance to remove the exact amount of iron and sulfur, which enters the system as FeS_2, iron pyrite in the coal. It is also of the utmost importance to remove ferrous and ferric sulfates in the same ratio as they are formed.

The above iron sulfates removal system permits varying the two waste streams to ensure removal of the proper amount of ferrous sulfate and ferric sulfate.

Stream #118 is returned to #1100-V-2 reslurry tank described above.

Stream #119, water from pumps #1100-P-3 A&B,is fed to #1100-V-2 reslurry tank, volume 11.4 cubic meters (3000 gallons), neoprene lined, to provide vehicle for returning the coal filter cake from #1100-F-1 to the reaction system.

Sulfuric acid makeup is required to compensate for the sulfuric acid lost with the waste iron sulfates.

Sulfuric acid is unloaded into tank #1100-T-2, 114 cubic meter (30,000 gallons) steel tank, pumped by pumps #1100-P-4 A&B (one spare), 1-1/2 horsepower, ductile iron pumps via stream #56 to the mixer #100-V-1 described in Sector 100.

Stream #23, the coal-sulfates slurry from reslurry tank #1100-V-2, is pumped by pumps #1100-P-1 A&B (one spare), 60 horsepower, #316 stainless steel, to stream #7 which feeds reactors #200-R-1 A-K described in Sector 200.

Stream #52, water vapor from dryer #1100-ME-2 mentioned above, goes to recovered water surge #1100-T-1, 570 cubic meters (150,000 gallons), red lead phenolic lined (Federal Specification TTP-86, Type 4) steel tank. Heat exchanger #1100-E-5 mounted on top of #1100-T-1 condenses water vapor.

Stream #55a or #55b provides fresh process water makeup or excess water waste removal, respectively, depending on the moisture content of the raw coal. With the assumed 10% moisture in the coal and no losses there will be a small amount of waste water discharged, e.g., 3.85 TPH per train discharged (see Figure 1).

Stream #124, dried ferric sulfate-rich waste from dryer #1100-ME-2, is combined with Stream #122, the ferrous sulfate-rich waste, to form Stream #22, the iron sulfates waste, for disposal.

4.5.13 Distillation - Sector 1400:
(Figure 24, Process Flowsheet #10)

Naphtha-sulfur Streams #38, #33, and #50, described in Sectors 600, 800, and 900, respectively, are collected in still feed tank #1400-T-1, 380 cubic meters (100,000 gallons), Ceilcote #64 lined steel.

Pumps #1400-P-1 A&B (one spare), 50 horsepower, #316 stainless steel, pump from #1400-T-1 Stream #34, which splits into Stream #73, described in Sector 500, and Stream #72.

Stream #72 is filtered through Filter #1400-F-1 to remove coal fines which have passed through the other coal filters. Stream #72, which has 2.4% sulfur and is free of

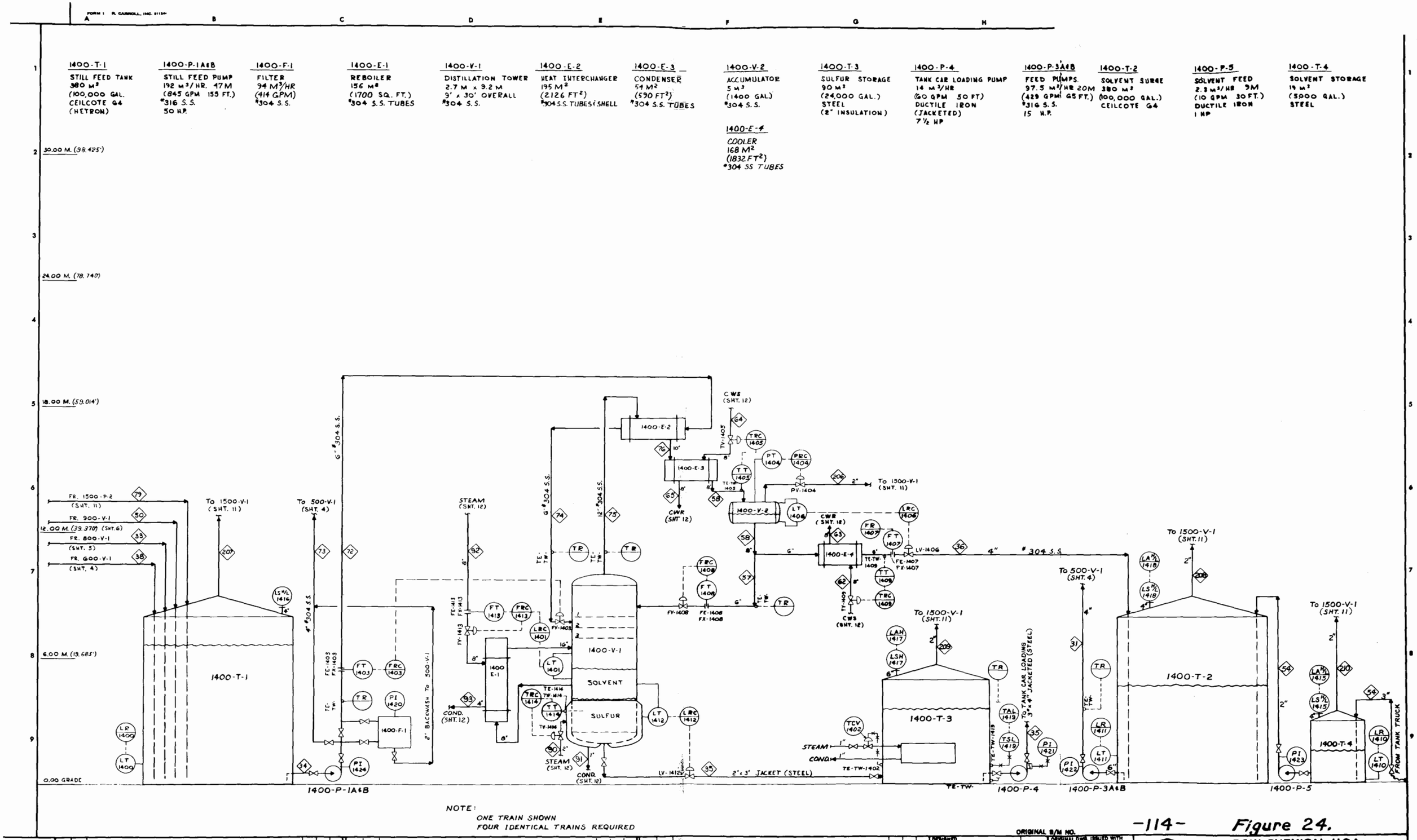

NOTE:
ONE TRAIN SHOWN
FOUR IDENTICAL TRAINS REQUIRED

-114-

Figure 24.

ORIGINAL B/M NO.

DESIGNED	E.F. HENSLEY	
DRAWN	H.D. BOYCE	3-6-74
CHECKED		
APPROVED	E. F. Hensley	10/31/74
NOTED		
MFG. REP.	W. McKenna	10/31/74

ORIGINAL DWG. ISSUED WITH

FOR BID PURPOSES ONLY
FOR CONSTRUCTION
FOR REFERENCE ONLY

DOW CHEMICAL U.S.A.

COAL – PYRITIC SULFUR REMOVAL
DISTILLATION – SECTOR 1400

PROCESS FLOWSHEET — SHT. 10 OF 12

JOB NUMBER 730623 — SCALE — B1-010-730623

PRINTED 5-21-75

REV. DWG. MARK COORD. — REVISION — BY DATE APP.

coal fines, is fed to heat interchanger #1400-E-2, 195 square meter (2,126 square feet), #304 stainless steel (both tubes and shell).

The preheated still feed from #1400-E-2, Stream #74, is fed to the middle tray of distillation column #1400-V-1, 2.7 meters diameter by 9 meters overall height (9 feet by 30 feet). The column has three ballast trays. The column is #304 stainless steel, but 20% - #304 stainless steel clad is also acceptable. The bottom 1.5 meters (5 feet) is jacketed. This jacketed section provides heated surge for complete removal of naphtha from the recovered sulfur.

Recovered naphtha-free sulfur Stream #35, goes to sulfur surge tank #1400-T-3, 90 cubic meters (24,000 gallons) and is pumped by sulfur loading pump #1400-P-4 to tank truck or tank car loading. Pump #1400-P-4 is steam jacketed and all sulfur pipelines are steam jacketed to keep sulfur at a few degrees centigrade above its melting point.

Heat for distillation is supplied by a steam heated thermo-siphon reboiler #1400-E-1, 156 square meters (1700 square feet), #304 stainless steel tubes.

Stream #75, overhead vapors from #1400-V-1, goes to the above mentioned heat interchanger. Stream #76, the partially condensed vapors, goes to the condenser #1400-E-3, 54 square meters (590 square feet), #304 stainless steel tubes. Condensed naphtha goes to accumulator #1400-V-2, 5.3 cubic meters (1400 gallons), #304 stainless steel.

The accumulator #1400-V-2 is pressure controlled by venting the non-condensibles to the vent scrubbing system described in Sector 1500.

Stream #58 from the above accumulator is split into Stream #57 for reflux to the top tray of #1400-V-1, and Stream #36 to cooler #1400-E-4, 168 square meters (1832 square feet), #304 stainless steel tubes and to recovered naphtha surge tank #1400-T-2, same size and material as #1400-T-1.

Stream #31 from #1400-T-2 is pumped by pumps #1400-P-3 A&B (one spare) to Stream #37 described in Sector 500.

Makeup naphtha is received by tank truck and loaded into #1400-T-4, a 19 cubic meter (5000 gallon) storage tank, and pumped by 1400-P-5 pump, 1 horsepower, ductile iron, to recovered naphtha surge tank #1400-T-2 described above.

4.5.14 Vent Scrubbing - Sector 1500:

(Figure 25, Process Flowsheet #11)

All vessels and tanks containing naphtha are vented to an "organic vent header" and all vessels and tanks containing aqueous solutions are vented to an "aqueous vent header." These vent headers are connected to separate nozzles at the bottom of scrubber tower #1500-V-1, 0.91 meters diameter, 7.2 meters overall height (3 feet by 23 feet - 6 inches) having 6.1 meters (20 feet) of 25 mm (1") steel ring packing.

A scrubber solution of 5 to 10% caustic soda is circulated by pumps #1500-P-1 A&B, (one spare), 5 horsepower, ductile iron, from scrubber surge-decanter vessel #1500-V-2, 38

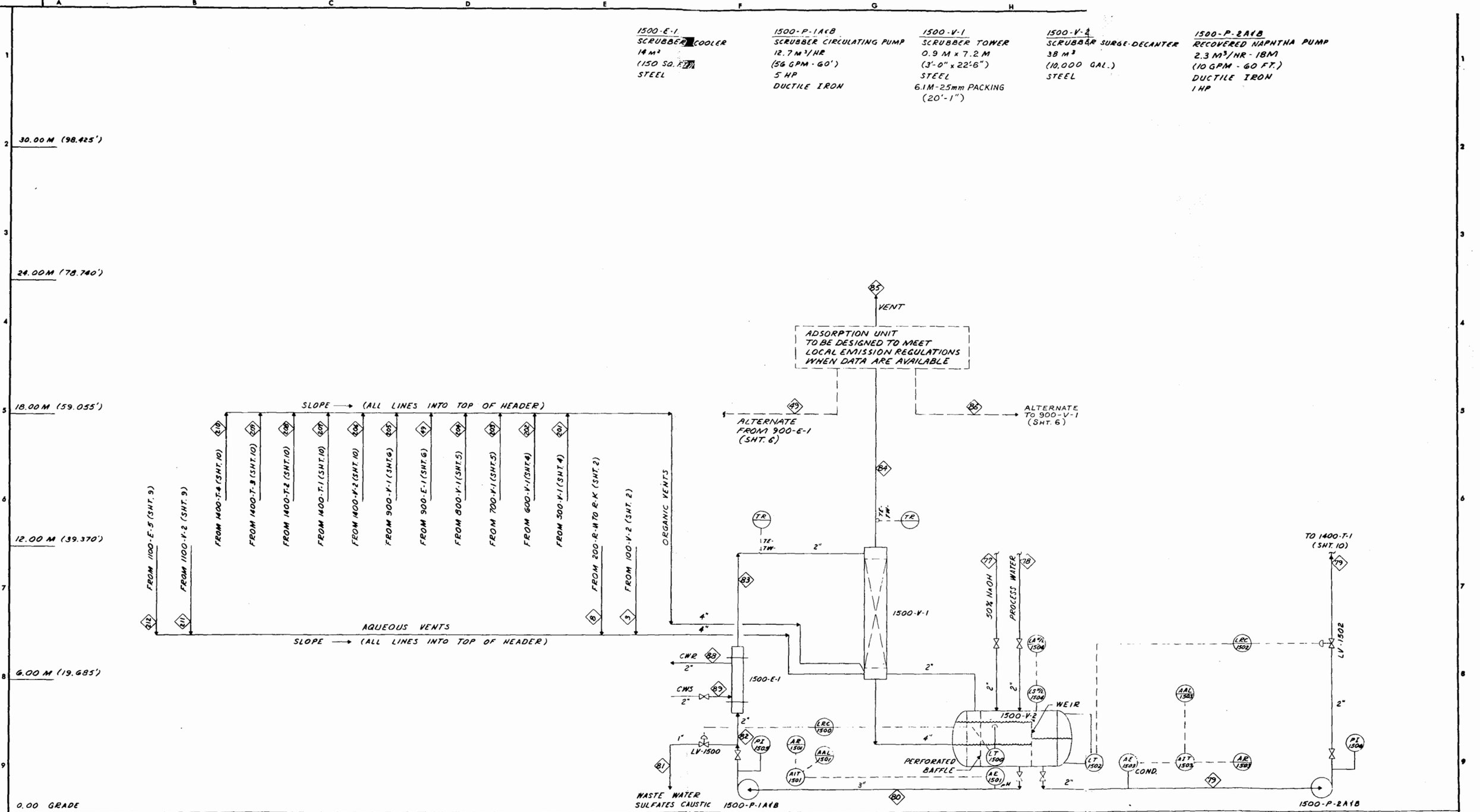

-117-

Figure 25.

ORIGINAL B/M NO.

DESIGNED	E. F. HENSLEY	1-21-74
DRAWN	R. A. MUDD	6-27-74
CHECKED		
APPROVED	E. F. Hensley	10/31/74
NOTED		
MFG. REP.	[signature]	10/31/74

ORIGINAL DWG. ISSUED WITH

FOR BID PURPOSES ONLY
FOR CONSTRUCTION
FOR REFERENCE ONLY

DOW CHEMICAL U.S.A.

COAL - PYRITIC SULFUR REMOVAL
VENT COLLECTION & SCRUBBING - SECTOR 1500
PROCESS FLOWSHEET

SHT 11 OF 12

JOB NUMBER 730623 | SCALE | B1-011-730623

PRINTED REV. 5-21-75 HDB

REV. MARK DWG. COORD. | REVISION | BY DATE APP.

cubic meters (10,000 gallons), steel, with perforated baffle and weir, through #1500-E-1, 13.9 square meters (150 square feet) steel heat exchanger to #1500-V-1 scrubber tower described above. The pH of the scrubber solution is recorded and manually controlled by the addition of 50% caustic soda. This neutralizes any sulfuric acid and hydrogen sulfide, which may be formed from sulfur in contact with organic solvents.

Condensed naphtha is decanted and pumped by pumps #1500-P-2 A&B (one spare) to the still feed tank described in Sector 1400.

The vent from #1500-V-1 is estimated at 91 kg (200 pounds) per hour of nitrogen and inerts, 54 kg (120 pounds) per hour of naphtha, and 3 kg (7 pounds) per hour of water vapor, all figures per train. Inasmuch as emission regulations prohibit this quantity of hydrocarbons, it will be necessary to provide an adsorption unit to decrease the emission of hydrocarbons to less than the allowable limits. The estimated quantities are too inaccurate to warrant specifying the adsorption unit until pilot plant operations yield meaningful data on quantity and composition of the feed stream to the adsorption unit.

Stream #81, waste water, is estimated to be approximately 227 kg (500 pounds) per hour, per train, 97% (by weight) water, 2% caustic soda, and 1% sodium sulfide and sulfates. It appears feasible to forward this waste to either #1100-V-1 evaporator or #1100-ME-2 evaporator/dryer. Disposition of this should await pilot plant data for finalization.

4.6 MATERIAL BALANCE

Material balance computations were made by a computer program which is proprietary information of The Dow Chemical Company. The results of this program are listed in Section 10.5.2 in the Appendix.

4.7 ENERGY BALANCE

Energy balance computations were made by a computer program which is proprietary information of The Dow Chemical Company. The results of this program are listed in Section 10.5.2 in the Appendix.

4.8 PLANT LAYOUT

The layout of the complex is tentative and can be finalized after selection of the site. The arrangement of equipment is also tentative and can be finalized after completion of final process and equipment design based on pilot plant operations. The tentative layout and arrangements are described in the following paragraphs.

4.8.1 Plot Plan

Figure 26 is a tentative layout of the entire complex. It shows the locations of the coal preparation facilities described in Section 4.5.1, the four identical process trains described in Sections 4.5.2 to 4.5.10 and 4.5.12 to 4.5.14, the product coal handling described in Section 4.5.11, the utility facilities described in Section 4.8.3, and the general facilities described in Section 4.8.4.

4.8.2 Equipment Location

The plan location of the equipment in each of the four identical process trains is shown in Figure 27 for the ground, second, and third floors, and Figure 28 for the fourth, fifth, and sixth floors.

4.8.3 Utilities

Figure 29 is a diagrammatic representation of the utility facilities. These are listed as follows and described in Section 10.2.1 of the Appendix.

Sector 2100 - Steam Generation
2200 - Water Supply
2201 - Process Water
2202 - Potable Water
2203 - Fire Protection
2204 - Cooling Water
2300 - Oxygen-Nitrogen
2400 - Instrument Air

The steam plant, fire protection and cooling water facilities, and the oxygen-nitrogen plant are located in Figure 26. The instrument air facility is assumed to be located within the steam plant area. The supply of process and potable water is primarily from underground pipelines and accordingly these have not been shown.

4.8.4 Site Development and General

The site development and general facilities are described in the following paragraphs.

4.8.4.1 Site - The assumed site location and conditions are as follows:

1. Major river valley
2. Major branch of coal handling railroad
3. Turnkey installation
4. No piling required
5. No stone in underground
6. Relatively level and clear

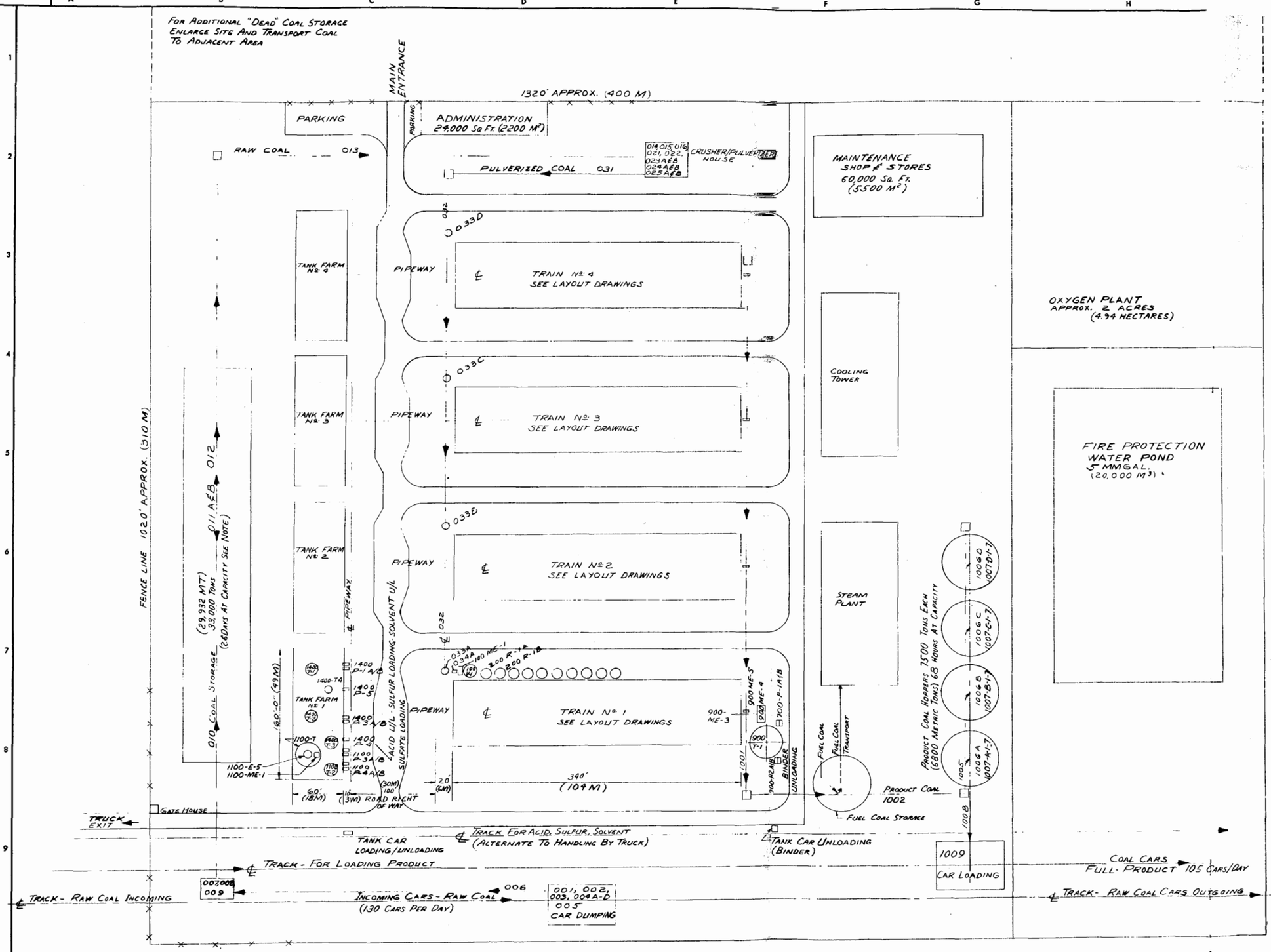

-122-

Figure 26.

ORIGINAL B/M NO.

DESIGNED	E. F. HENSLEY	
DRAWN	R G M	3-6-74
CHECKED		
APPROVED	E. F. Hensley	10/31/74
NOTED		
MFG. REP.	W. McKenna	10/31/74

ORIGINAL DWG. ISSUED WITH

FOR BID PURPOSES ONLY
FOR CONSTRUCTION
FOR REFERENCE ONLY

DOW CHEMICAL U.S.A.

COAL-PYRITIC SULFUR REMOVAL PLOT PLAN

JOB NUMBER 730623 | SCALE 1" = 60' | B2-001-730623

PRINTED REV. 5-21-75 HDB

REVISION | REVISION | REVISION

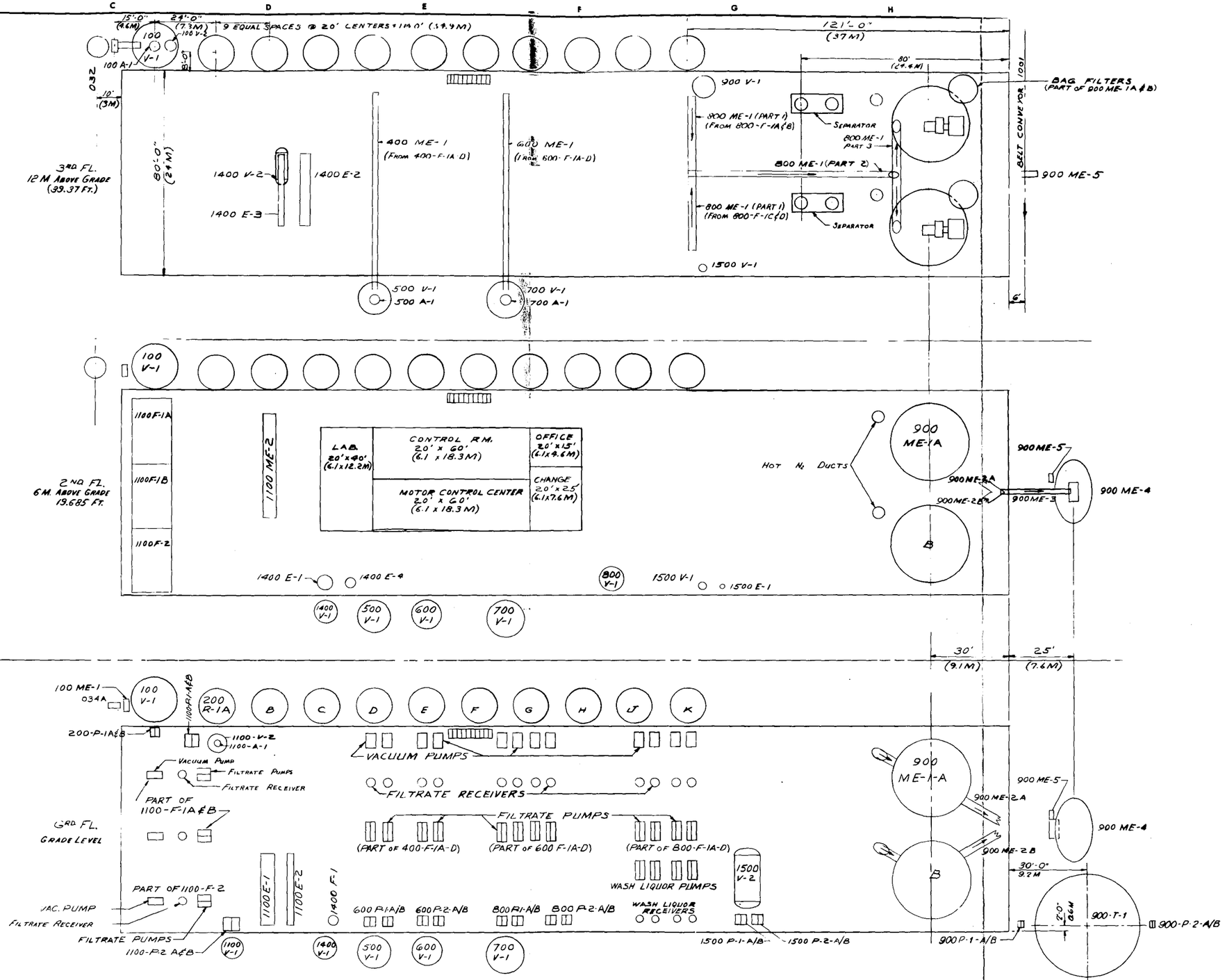

Figure 27.

ORIGINAL B/M NO.

DESIGNED	E.F. HENSLEY	
DRAWN	R G M	3-8-74
CHECKED		
APPROVED	E. F. Hensley	10/3/74
NOTED		
MFG. REP.		10/31/74

ORIGINAL DWG. ISSUED WITH

FOR BID PURPOSES ONLY
FOR CONSTRUCTION
FOR REFERENCE ONLY

DOW CHEMICAL U.S.A.

COAL-PYRITIC SULFUR REMOVAL
DETAIL FLOOR PLANS
GROUND, SECOND, THIRD FLOORS

JOB NUMBER	SCALE	
730623	1" = 20'	B5-001 -730623

PRINTED 5-21-75

REV. DWG. MARK COORD.	REVISION	BY	DATE	APP.

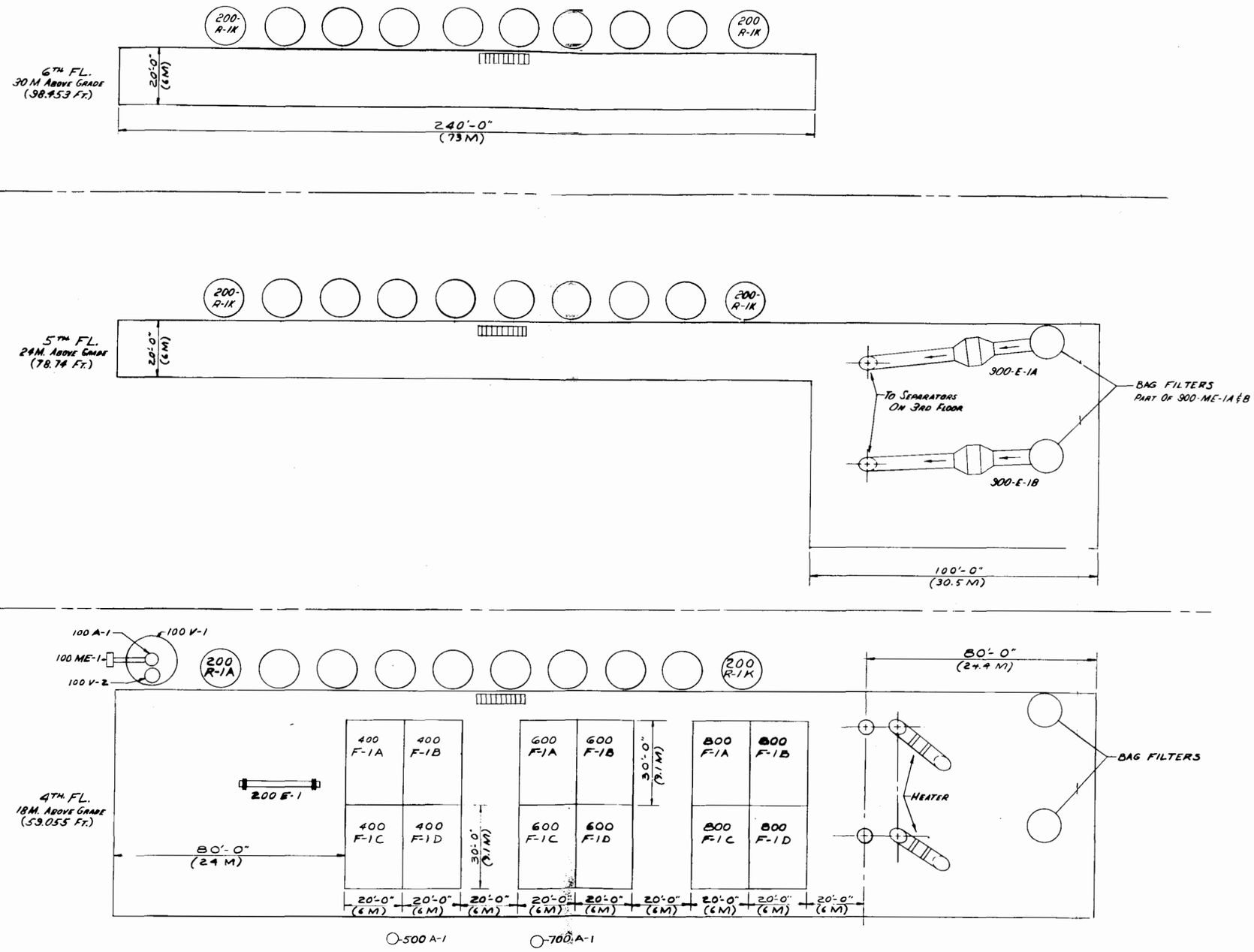

-124-

Figure 28.

DOW CHEMICAL U.S.A.

COAL-PYRITIC SULFUR REMOVAL
DETAIL FLOOR PLANS
FOURTH, FIFTH, SIXTH FLOORS

ORIGINAL B/M NO.

DESIGNED E.F. HENSLEY
DRAWN R G M 3-8-74
CHECKED
APPROVED E. F. Hensley 10/31/74
NOTED
MFG. REP. 10/31/74

ORIGINAL DWG. ISSUED WITH

FOR BID PURPOSES ONLY
FOR CONSTRUCTION
FOR REFERENCE ONLY

JOB NUMBER 730623 | 1" = SCALE 20' | B5-002 -730623

PRINTED 5-21-75

REV. MARK | DWG. COORD. | REVISION | BY | DATE | APP.

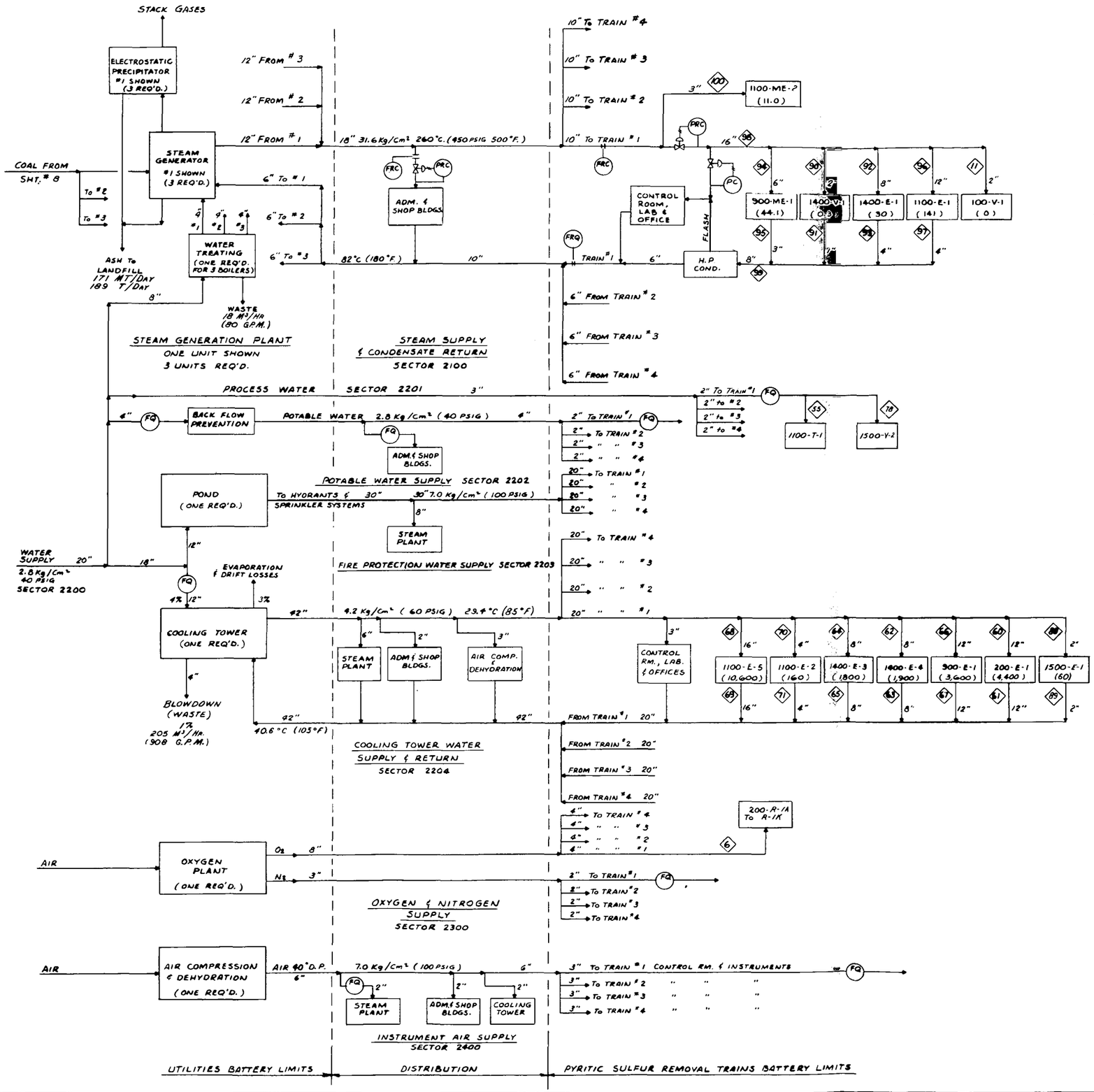

FACILITY	UTILITY											
	ELECTRIC	WATER					STEAM	COND.	AIR	OXYGEN	NITROGEN	FUEL
	KW	SUPPLY GPM	PROCESS GPM	POTABLE GPM	COOLING GPM	FIRE GPM	M³/HR	M³/HR	CFM	TONS/HR	CFH	MM BTU/HR
FEED COAL PREP'N.	1800	–	50	–	–	1,000	–	–	200	–	1,500	–
TRAIN # 1	3000	–	20	–	22,520	10,000	227	227	300	5	1,000	–
" #2	3000	–	20	–	22,520	10,000	227	227	300	5	1,000	–
" #3	3000	–	20	–	22,520	10,000	227	227	300	5	1,000	–
" #4	3000	–	20	–	22,520	10,000	227	227	300	5	1,000	–
CONTROL, LAB, OFFICE #1	100	–	–	5	20	–	NEG.	–	–	–		–
" #2	100	–	–	5	20	–	"	–	–	–		–
" #3	100	–	–	5	20	–	"	–	–	–		–
" #4	100	–	–	5	20	–	"	–	–	–		–
PRODUCT COAL HANDLING	900	–	25	–	–	500	–	–	100	–	750	–
SUB TOTAL · PROCESS	15,100	–	155	20	90,000	41,500	908	908	1,500	20	6,250	–
UTILITIES												
STEAM PLANT	2,250	–	800	2	500	1,000	–	–	200	–	–	1,000
AIR COMP. DEH.	470	–	–	–	235	–	–	–	–	–	–	–
OXYGEN PLANT	8,750	–	–	–	–	–	–	–	100	–	–	–
ADM. BLDG.	200	–	–	10	50	–	NEG.	–	20	–	–	–
SHOP	300	–	–	5	10	–	"	–	100	–	–	–
FIRE PROTECTION	2,000	(1) 3,500	–	–	–	–	–	–	–	–	–	–
COOLING TOWER	5,400	–	4,000	–	–	–	–	–	20	–	–	–
PROCESS WATER	–	5,400	–	–	–	–	–	–	–	–	–	–
POTABLE WATER	–	50	–	–	–	–	–	–	–	–	–	–
SUB-TOTAL UTILITIES	19,370	8,950	4,800	17	795	1,000	–	908	460	–	–	1,000
PROCESS/UTILITIES	34,470	8,950	4,955	37	90,795	42,500	908	908	1,960	20	6,250	1,000
ALLOWANCE	5,530	INCL.	445	13	9,205	20,500	92	98	390	6	1,750	INCL.
TOTAL	40,000	8,950	5,400	50	100,000	22,000	1,000	800	2,350	26	8,000	1,000
METRIC UNITS	KVA	M³/HR	M³/HR	M³/HR	M³/HR	M³/HR	MT/HR	MT/HR	M³/HR	MT/HR	M³/HR	K Cal/HR
DESIGN BASIS	50,000	2,030	1,230	11	22,600	5,000	454	363	4,000	24	230	252 x10⁴

(1) MAKE-UP TO 20,000 M³ (5MMGAL.) POND (4 HR. SUPPLY) 82 M SQUARE x 3 M DEEP

SYSTEMS AS SHOWN PROVIDE FOR FOUR (4) PROCESS TRAINS

Figure 29.

DESIGNED	E.F. HENSLEY	1/21/74
DRAWN	D.G. HIERHOLZER	2/28/74
CHK'D.		
APPROVED	E.F. Hensley	12/31/74
NOTED		
MFG. REP.	W. McKown	12/31/74

DOW CHEMICAL U.S.A.

COAL - PYRITIC SULFUR REMOVAL

SECTOR 2000 - UTILITIES

SHT. 12 OF 12

JOB NUMBER 730623

BI-012-730623

5-21-75

REVISIONS	CHANGED BY	APPROVED BY	DATE	MARK	LOC'TN	DATE	REVISIONS	CHANGED BY	APPROVED BY	DATE	B. M. NO.	DATE	B. M. NO.	DATE

A 20 hectare (50 acre) site has been assumed with 13 hectares (31 acres) cleared, fenced, and developed with roads, parking area, surfacing, landscaping and railroad tracks. One track is provided for incoming coal and empty outgoing cars, one track for empty incoming product coal cars and full product coal cars, and the third for unloading raw materials and loading product sulfur and waste sulfates, all as shown in Figure 26.

4.8.4.2 General Facilities - The major general facilities are the administration building and the maintenance shop and stockrooms and stores building. The location of these is shown in Figure 26.

The administration building has been assumed to have 2200 square meters (24,000 square feet) of floor area for office space for the administrative personnel.

The maintenance shop and stores building has been assumed to have 5500 square meters (60,000 square feet) of floor area for maintenance and stores personnel, shop equipment and tools, and spare parts and maintenance materials.

5.0 PROCESS ECONOMICS

A capital and operating cost study for the base case is given in this chapter with examples of the effect on the return on total capital (ROTC) shown for variations in capital cost and in product coal price.

5.1 PROCEDURE AND BASES

The bases listed in Section 3.4 are repeated below and further detail is given.

Location and site

- Pennsylvania-West Virginia area
- Major river valley
- Major branch of a coal hauling railroad
- Site relatively level and suited to construction

Overall plant description

- Turnkey installation
- Self-sufficient; purchased power and water
- Receive raw Lower Kittanning coal in rail cars
- Specify coal storage, reclaim, and grinding facilities
- Pass all coal through chemical desulfurization process
- Remove 95% of the pyritic sulfur
- Supply 9070 metric tons per day of 95% pyrite-free coal ready for transport
- Supply 95% pyrite-free coal for steam generation
- Provide for removal of by-products and wastes

Economics

1975 costs and wages (1973 dollars)

Capital costs built up on an installed equipment basis

The operating costs include depreciation

Profit calculated as return on total investment

Minimum daily production of 9070 metric tons (10,000 short tons) of product coal, dry basis, without binder plus fuel coal

Run of mine coal purchased at $9.70 per metric ton ($8.80 per short ton), dry basis, delivered to plant site.

Conventional engineering units were used in the computer program

A land purchase cost of $100,000 is included in Site Development

5.1.1 Capital Cost Estimate and Related Costs

5.1.1.1 Capital Cost Estimate - The capital costs are given in Table 13 for complete engineering, purchasing, and installation of battery limits equipment and off-site utilities and facilities for the plant whose conceptual design is developed in Chapter 4.0. Details for the sectors are presented in Sections 10.2, Equipment; 10.3, Instrumentation; and 10.6, Capital Costs. The estimates are based on major equipment costs from vendors' quotations or Company purchase records. These data are built up on a unit operations basis for the components of each sector using judgment, plus conventional and proprietary factors.

Table 13. CAPITAL COST ESTIMATE SUMMARY

SECTOR		M$ (1975)
000	Coal Handling & Preparation	8,800.0
100	Mixing	1,044.5
200	Reaction	23,960.1
400	Filtration	6,906.1
500	Extraction	1,010.1
600	Filtration/Decantation	7,338.2
700	Water Washing	1,126.3
800	Filtration/Decantation	8,630.6
900	Drying, Decantation, Compacting	6,984.9
1000	Product Coal Handling	3,770.0
1100	Iron Sulfates Removal	13,891.3
1400	Distillation	4,931.7
1500	Vent Scrubbing	642.0
1900	Building & Miscellaneous	10,864.3
	SUB-TOTAL PROCESSING	99,900.1
2000	Utilities	28,251.8
3000	Site Development & General	4,503.9
	SUB-TOTAL	132,655.8
	Allowances (10%)	13,344.2
	TOTAL	146,000.0

PROBABILITY - 80%

Maximum (+22%) $180,000.0M

Minimum (-18%) $120,000.0M

5.1.1.2 Capital Related Costs - A large proportion of the operating costs is related to capital. The detail is given below for depreciation, maintenance, insurance and taxes.

Depreciation - The data of Table 13 are regrouped in Table 14 according to depreciation category. Depreciation is calculated on a straight line basis, i.e., for 20 year depreciation 1/20th or 5% of the original capital is taken as an annual cost.

Maintenance - Annual expenditures for maintenance materials and labor, spare parts, replacement, and revisions are variable and need careful control. For purposes of a cost estimate an overall maintenance cost of 4.0% of the capital was chosen.

Insurance and Taxes - The annual premiums for fire and loss insurance are directly related to capital values, as are local property taxes and some state taxes. A total of 2.0% for these is realistic.

General and Administrative - A number of cost and capital items that are important but relatively small in some cases are grouped in Table 14 as "G&A and working capital." An example of the items included in working capital is given below. Inventories were valued at cost less any depreciation component included in the cost. The dollar amounts will vary slightly from one alternative calculation to another. These are representative. In addition to the capital items listed below there will be other costs associated with functions that might be performed at another location and added to the manufacturing cost just prior to sale. These would include corporate administration,

Table 14. CAPITAL-RELATED COSTS GROUPED ACCORDING TO DEPRECIATION PERIOD

Section or Category	Depreciation Years	Capital $MM	Product, dry basis $ Capital / Ann. ton	Product, dry basis $ Cost[a] / ton
Coal handling	20	13.8	4.6	0.51
Site development and general	25	5.0	1.7	0.17
Utilities and services	20	22.1	7.4	0.81
Oxygen plant	20	9.0	3.0	0.33
Chemical processing	10	96.1	32.0	5.12
SUBTOTAL	(13.6 wtd avg)	146.0	48.7	6.94
G&A and working capital	N.A.	9.0	3.0	0.09[b]
TOTAL, metric tons		155.0	51.7	7.03
TOTAL, short tons		155.0	47.0	6.39

[a] $$\frac{\$\ \text{Cost}}{\text{ton}} = \frac{\$\text{MM Cap. (0.04 Mntce+0.02 Taxes\&Ins+1.0/yrs Depr)/yr}}{\text{3.0MM metric tons/yr}}$$

[b] G&A cost/ton = $270M ÷ 3000M = $0.09. There is no cost component to working capital or G&A capital.

selling, research and other general expenses. An allocation of about 1/2% of sales income less raw material cost, or $270,000, has been used for the cost component of general and administrative functions and $90,000 has been allocated for capital associated with these functions. These data have been expressed as rounded totals in Table 14.

Working Capital:	
Materials and supplies	$ 250 M
Raw material inventory	1600
In-process inventory	140
Product inventory	500
Cash and accounts receivable	6470
SUBTOTAL working capital	$8960 M
General and Administrative	90
TOTAL G&A and working capital	$9050 M

The grouping in Table 14 shows the relative contribution of the various components of the overall installation to the capital as total capital in column two and as capital cost per annual ton in column three for unit comparison with other processes. Column four shows the relative contribution to operating cost per ton of product. The Allowances from Table 13 were spread proportionally among the groups.

5.1.2 Manpower

The process was examined in detail and the duties of the operators were listed in order that a good estimate could be made of the number of people needed to operate four process trains on an around-the-clock basis. Table 28, Section 10.7.1, presents a listing of example duties for the process

operators. A schedule of three eight-hour shifts per day was chosen with a crew manning a shift for seven days, being off for two days and then coming back on the next shift. With this 7 and 2 arrangement four crews provide continuous full time coverage. There is one 3 day time-off period for each crew every month. Others on the 7 and 2 schedule would be the plant guards, the quality control technicians, the operators of the steam plant, and other utilities and a few individuals from the service station, or motor pool, and from the Maintenance Department.

On the basis of the plot plan, utility requirements, estimated plant capital and the process manning the additional manpower to adequately staff the entire complex was estimated based on general Company experience and on the current personnel list of a similarly sized independent operating unit of the Company at a particular location. A job listing for this complex is given in Table 27, Section 10.7.1.

Table 15A below shows a summary of manpower by department and section or function. The data are further subdivided into broad classifications of skills or wages to facilitate analysis and development of alternative manning plans. The total personnel for this complex will be well over 500 people. For purposes of economic evaluation the maintenance personnel have been subtracted. Their costs are included in the charges for maintenance, described in Section 5.1.1.2. An alternative to including maintenance men in the total personnel list would be to have the maintenance done by outside contractors.

Table 15A. MANPOWER SUMMARY
Number of Employees in Broad Skill/Wage Ranges

Labor Classification[a]	A Management	B Technical	C Labor	D Secretarial	Totals
Department, Section or Function					
Administration					
Plant Manager's Office	1	1	--	1	3
Accounting, Purchasing, Office Svcs.	2	4	--	3	9
Traffic, Communications, Secretarial	1	2	--	2	5
Ind. Relations, Plant Safety & Security	2	13	--	1	16
SUBTOTAL	6	20		7	33
Production					
Supervision and Administration	10	23	4	1	38
Coal Receiving and Shipping	--	--	18	--	18
Shift Operators, 10/train-shift	--	--	160	--	160
Spare Operators, Janitors	--	--	12	--	12
SUBTOTAL	10	23	194	1	228
Services					
Engineering and Process Development	4	11	--	1	16
Quality Control	3	2	16	1	22
Utilities and Oxygen	2	11	18	1	32
Service Station, Warehouse, Laborers	2	1	25	--	28
SUBTOTAL	11	25	59	3	98
Maintenance					
Shops and Field Services	5	5	157	3	170
TOTAL Personnel	32	73	410	14	529
TOTAL, Excluding Maintenance	27	68	253	11	359

[a]See extended listing in Table 16 and additional detail in Tables 27 and 28.

It could be expected that a plant such as this might start out with one process train plus appropriate utilities and services. Personnel would be scaled accordingly. During the start-up, additional services manpower could be arranged for with the prime contractor, and a smaller Administration Department could handle the plant needs. After all units were on stream and personnel became more experienced the spectrum of jobs could also change. An example might be a reduced requirement for supervisory personnel in the Utilities Department.

Several functions are shown in Table 27, as more or less secondary to the main personnel assignments. Local conditions for a particular plant would determine if these or other jobs could be given peripheral importance. Examples are:

- Public relations and ecology planning,
- Office manager, receptionists, person responsible for answering the general plant telephone,
- Fire protection, first aid and industrial hygiene sections. Local municipal and private participation is assumed.

In addition, a large degree of flexibility should be built into the jobs in the Services Department to provide efficient response to changing requirements.

In the economics program in Section 10.7.2 the total personnel, excluding maintenance, for each labor classification from Table 15A was used as input. In Table 15B, the wage range for each group is listed and the annual costs of labor by skill and department are estimated and totaled. These totals are rounded and were increased by $24M above the labor shown

Table 15B. MANPOWER COST SUMMARY

Labor Classification[a]	A Management	B Technical	C Labor	D Secretarial	Totals
Annual 1973 Wage plus 20% escalation and 25-33% fringes, $M/man-year	27-33	18-28	14-20	9-15	
Annual Cost of labor to the plant, $M					
Administration	190	400	--	80	670
Production	295	500	3450	15	4260
Services	325	600	990	40	1955
Maintenance	150	100	2800	30	3080
TOTAL	960	1600	7240	165	9965
TOTAL, excluding maintenance	810	1500	4440	135	6885
Average cost to plant, $M/man-year					
Administration	31.7	20.0	--	11.4	20.3
Production	29.5	21.7	17.8	15.0	18.7
Services	29.5	24.0	16.8	13.3	19.9
Maintenance	30.0	20.0	17.8	10.0	18.1
All Departments	30.0	21.9	17.7	11.5	18.8
All Depts., excluding maintenance	30.0	22.1	17.5	12.3	19.2

[a]Extended labor classification listing:

A. Management, Top Supervision, Experienced Technical
B. Other Technical, Foremen
C. Operating Labor, Craftsmen, Other Plant Labor, Clerks, Janitors, Crew Leaders
D. Secretarial, Office Assistants, Labor Trainees, Part Time Labor

Additional detail is given in Tables 27 and 28.

in the program to allow for a wide variety of miscellaneous services. The $24M was taken from the water and refuse disposal estimate so that the total cost for sale is not affected. Examples of some of the miscellaneous services that would be performed by the listed personnel or others are:

- -- Miscellaneous receiving, warehousing, and package delivery,
- -- Laundry and safety supplies service,
- -- Recovery of salvageable materials,
- -- Temporary employment programs (summer painting, contract yard cleanup and repair service, training programs).

5.1.3 Unit Ratio Based Costs

The single largest cost item is the purchased coal used as feed to the chemical leach process. Detail pertinent to the coal balance is given in Table 16. The other raw materials, utilities and waste streams can be related to the coal throughput, and for convenience these have been expressed as a fraction of the product coal, less moisture.

Most of these inputs are identified and listed in Figure 1, Block Flowsheet, Section 4.1.2 and in Figure 29, Utilities, Section 4.8.3. These have been tabulated in Tables 17A & 17B, wherein are shown the units, the number of units used hourly in one process train, the value of a unit and the number of days of inventory for each item. Table 17A utilizes metric units and 17B conventional engineering units. The basis for the unit ratios is the product coal from the last column in Figure 1, Block Flowsheet, less moisture and binder. The unit ratios were rounded by about 2% in the direction of increased cost for some of the items other than coal received and ash loss.

The following were taken directly from Figure 1: coal received, oxygen, sulfuric acid, naphtha, binder, sulfur credit, fuel coal, and iron sulfates disposal. The ash loss is taken as the initial pyrite content less the pyrite and iron and sulfur-containing residual salts left from the reacted pyrite without correcting for the oxygen component of the sulfates. The nitrogen produced was taken as a weight ratio of about 3:1 to the oxygen. Approximately one tenth market value was assigned to nitrogen for by-product credit.

A term was entered to allow for miscellaneous chemical agents as defined in the table. This was set to be somewhat of the order of cost magnitude of the smallest raw material, the solvent.

Table 16. DETAIL OF ANNUAL COAL RATES

The amount of coal used or produced on an annual basis is given below. The letters mpf are used to signify a moisture and pyrite free basis without binder.

	metric tons per hr, one train	metric tons M per yr, four trains	short tons per hr, one train	short tons M per yr, four trains
Feed				
Coal, mpf	102.94	3260	113.50	3596
Pyrite	7.39	234.1	8.15	258.2
SUBTOTAL	110.33	3494	121.65	3854
Fuel				
Coal, mpf	8.435	267	9.30	295
Iron & sulfur Compounds	0.036	1.1	0.04	1.3
SUBTOTAL	8.47	268	9.34	296
Product				
Coal, mpf	94.510	2994	104.20	3301
Iron & sulfur Compounds	0.535	16.9	0.59	18.7
SUBTOTAL	95.04	3011	104.79	3320
Ash loss, by difference				
Iron & sulfur Compounds	6.82	216.1	7.52	238.2
Product				
Coal,dry basis	95.04	3011	104.79	3320
Binder	1.42	45	1.57	50
Moisture	3.80	120	4.19	133
TOTAL	100.26	3176	110.55	3503

Table 17A. DATA FOR UNIT RATIO BASED COST ITEMS, METRIC

Cost Item	Units	Hourly Units per Train[c]	Unit Ratio Used[c]	1973 Value, $/Unit	Days of Inventory
Product coal, dry basis	MT	95.0	1.0	27.56	3
Coal received, dry basis	MT	110.3	1.17	9.70	14
Ash loss, net iron and sulfur compounds only	MT	6.82	0.072	N.A.	--
Oxygen, 99.5%	MT	4.52	0.048	N.A.	1
Nitrogen credit	MT	-13.6	-0.14	nil	nil
Sulfuric acid, 98%	MT	1.53	0.016	39.68	5
Naphtha	MT	0.11	0.0012	49.60	5
Chemical agents[a]	kg	Variable	0.0010	55.11	30
Binder, lignin sulfonate	kg	1,550	16.0	0.11	30
Sulfur credit	MT	-1.48	-0.015	13.23	7
Power	KW	5,682	60.0	0.012	--
Fuel coal, dry basis	MT	8.5	0.09	N.A.	3
Water[b]	M^3	284.0	3.0	0.0026	--
Cooling tower blow-down disposal	M^3	52.0	0.55	0.0013	--
Water treating plant waste	M^3	4.5	0.05	0.0026	--
Iron sulfates disposal	MT	14.3	0.15	2.75	--
Steam plant ash disposal	MT	1.31	0.014	1.65	--

[a]Wetting, defoaming, flocculating agents and alkali

[b]Process, utility, and potable water -20%; Cooling tower make-up water -80%

[c]Negative numbers indicate by-products credited to the raw material cost section

Table 17B. DATA FOR UNIT RATIO BASED COST ITEMS, CONVENTIONAL

Cost Item	Units	Hourly Units per Train[c]	Unit Ratio Used[c]	1973 Value, $/Unit	Days of Inventory
Product coal, dry basis	tons	104.8	1.0	25.00	3
Coal received, dry basis	tons	121.65	1.17	8.80	14
Ash loss, net iron and sulfur compounds only	tons	7.52	0.072	N.A.	--
Oxygen, 99.5%	tons	4.98	0.048	N.A.	1
Nitrogen credit	tons	-15.0	-0.14	0.70	nil
Sulfuric acid, 98%	tons	1.69	0.016	36.00	5
Naphtha	tons	0.12	0.0012	45.00	5
Chemical agents[a]	cwt	Variable	0.0010	50.00	30
Binder, lignin sulfonate	cwt	34.2	0.34	5.00	30
Sulfur credit	tons	-1.63	-0.015	12.00	7
Power	KW	5,682	54.0	0.012	--
Fuel coal, dry basis	tons	9.34	0.09	N.A.	3
Water[b]	M gal.	75.0	0.75	0.01	--
Cooling tower blow-down disposal	M gal.	13.6	0.29	0.005	--
Water treating plant waste	M gal.	1.2	0.012	0.01	--
Iron sulfates disposal	tons	15.75	0.15	2.50	--
Steam plant ash disposal	tons	1.44	0.014	1.50	--

[a]Wetting, defoaming, flocculating agents and alkali

[b]Process, utility, and potable water -20%: Cooling Tower make-up water -80%

[c]Negative numbers indicate by-products credited to the raw materials cost section

The only purchased utilities are electricity and water. These were estimated as follows:

Electric power:

32,470 KW total connected load x 70% load factor = 22,729 KW for the complex or 5,682 KW for one train, excluding power for fire protection.

Water:

Process	35 M^3/hr	155 gpm
Steam plant	182	800
Potable	8	37
Cooling tower make-up	908	4000
	1133 M^3/ hr	4992 gpm, or 300 M gal per hr.

The amount of water treatment plant effluent and the cooling tower blow-down disposal or waste side-stream are given in Figure 29, Sector 2204. Disposal costs were taken arbitrarily as equal to one half the average water cost. Ash from the fuel coal is also listed in Figure 29, Sector 2100. The costs of disposal of ash and sulfates refuse listed in tables 17A and 17B are nominal values used for landfill. The sulfates refuse cost allows for a thin membrane lining for the landfill area[15,16].

The unit costs in Table 17 were chosen from published and private sources for 1973 and 1974. The inventories were generally taken as less than the design specification capacities.

5.2 OPERATING COST ESTIMATE

5.2.1 Basic Conceptual Design Costs

A proprietary universal economic evaluation program (UEEP) was used to develop an estimate of typical operating costs at capacity for the plant utilizing the values presented in the preceding sections. An example of the detailed computer printout is given in Section 10.7.2 in conventional engineering units. Tables 18A and 18B summarize the data.

Table 18A summarizes the cost items and gives the annual cost per ton of product coal on a dry basis, and as sold including binder and about 4% moisture. The coal forwarded to the plant boiler house as fuel and the ash loss are treated as costs because they constitute a consumption of the purchased coal. An upward rounding of 0.9% in the unit ratio of coal-received to coal-product required an increase of 11% in the ash and coal losses in the cost estimate to balance the coal accounting. The remainder of the coal appears in the product. When this remainder is subtracted from the total cost, a treating cost is obtained.

Table 18B shows the sales income and several profitability measures using the cost data of Table 18A. The data for return on total capital before taxes (ROTCBT), or return on investment (ROI), are further plotted in Figure 30 to show the impact of variations in direct fixed capital, selling price, or production rate. The base case shows a 12.2% ROI at a sales price of $28.00 per ton, dry basis, for the capital level presented in Section 5.1.1, i.e. $146 million DFC. From Figure 30 it can be determined that to obtain a 20% ROI it would be necessary to increase the price by 14% to $32 per ton or reduce the DFC by 25%. A 20% decrease in production rate for the base case DFC and price would result in an ROI of 6%.

Table 18A. OPERATING COST ESTIMATE SUMMARY

Annual production:
Dry basis $3,000 \times 10^3$ MT ($3,300 \times 10^3$ short T)
As sold, 1.5% binder and 4% moisture $3,170 \times 10^3$ MT ($3,500 \times 10^3$ short T)

Working Capital: $\$9,050 \times 10^3$

Total Capital: $\$155,050 \times 10^3$

Cost Item	$M/yr	Dry basis $/short T	As sold $/short T
Raw Materials and By-products			
Coal			
Ash & coal loss 264×10^3 T	2,323	0.704	0.664
To fuel 297×10^3 T	2,614	0.792	0.747
To product $3,300 \times 10^3$ T	29,040	8.800	8.297
Sulfuric acid	1,901	0.576	0.543
Naphtha	178	0.054	0.051
Chemical agents	165	0.050	0.047
Binder	5,610	1.700	1.603
Sulfur credit	- 594	-0.180	-0.170
Nitrogen credit	- 323	-0.098	-0.092
Subtotal	40,914	12.398	11.690
Capital Related Costs			
Depreciation	12,043	3.649	3.441
Maintenance	5,840	1.770	1.669
Insurance and taxes	2,920	0.885	0.834
Subtotal	20,803	6.304	5.944
Other Costs			
Power	2,138	0.648	0.611
Water and waste disposal	2,478	0.751	0.708
Labor and miscellaneous	6,885	2.086	1.967
General and administrative	270	0.082	0.077
Subtotal	11,771	3.567	3.363
Total and unit cost	73,488	22.269	20.997
Treating cost	44,448	13.469	12.700
		$/MT	$/MT
Total unit cost, metric	73,488	24.496	23.182
Treating cost, metric	44,448	14.816	14.022

Table 18B. PROFIT SUMMARY AT CAPACITY

Annual sales of product coal:	
Dry basis	$3,000 \times 10^3$ MT ($3,300 \times 10^3$ short T)
As sold, 1.5% binder and 4% moisture	$3,170 \times 10^3$ MT ($3,500 \times 10^3$ short T)

Cost Item	$M/yr	Dry basis $/short T	As sold $/short T
Net product sales	92,400	28.00	26.40
Cost for sale	73,488	22.27	21.00
Profit, before tax	18,911	5.73	5.40
Profit, after tax	9,834	2.98	2.81
	$M	$/TPY	$/TPY
Working capital	9,050	2.74	2.59
Total capital (TC)	155,050	46.98	44.30

Profit ratios, BT	
ROTC, %	12.2
Return on Sales, %	20.5
Turnover, Sales/TC	0.6
Sensitivity, BT	
ROTC @ 50% capacity, %	- 3.8
ROTC @ 120% DFC, %	8.1
ROTC @ 80% DFC, %	18.5
Treating cost/heating value,	
@ 25.8MM Btu/short T	52¢/MM Btu
or 7.2 MM kcal/MT	$1.87 /MM kcal

Figure 30. Effect of Variations in Price, Direct Fixed Capital (DFC), and Production Rate on the Return on Investment (ROI) of Base Case.

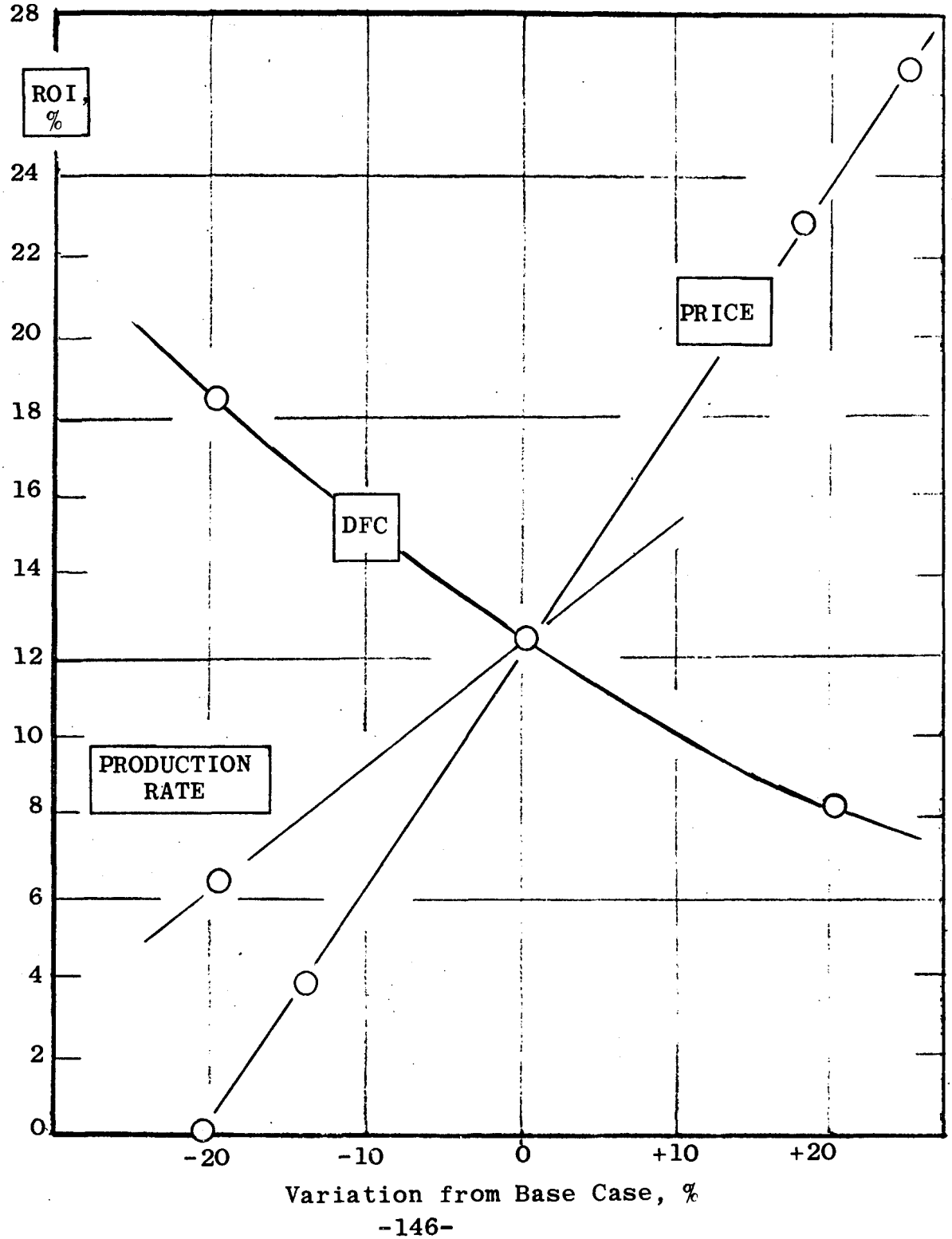

5.3 COMPARISON WITH OTHER RELATED PROCESSES

5.3.1 Criteria of Performance

There are a large number of processes being investigated that will bring about better utilization of coal or reduce the sulfur oxide pollution from coal combustion. Several of the yardsticks used to compare these processes are given below with comments and data from the chemical desulfurization process.

Engineering feasibility -- This conceptual process design has been shown to be completely feasible and can be used as a basis for development of detailed engineering plans and ultimate construction.

Sulfur removal efficiency -- This process does not remove organic sulfur, and it may leave a residual of up to 0.1% sulfur as free sulfur and sulfates. This places it between coal conversion and mechanical cleaning in sulfur removal ability. For a wide range of coals this would be ample beneficiation[2,15].

Commercial practicability -- Coal beneficiation has the advantage that it can be performed in large volume production facilities, the product can be sold for use in existing large and small facilities without need for costly remodeling, the cleaned coal can be stored outside for use, and its cost for consumption varies directly according to the output of the using facility.

Thermal efficiency -- The following approximate calculation shows close to 90% thermal efficiency for the overall process from run of mine coal to cleaned and crushed product coal.

Basis: One ton of coal feed, dry basis

	M Btu
Energy out:	
Coal out, $\frac{104.8 \text{ T product}}{121.65 \text{ T feed}} \times (12{,}900 \times 2{,}000)$ Btu/T=	22,227
Energy in:	
Coal in, 1.0 T x (12,300 x 2,000) Btu/T=	24,600
Process power, including O_2 plant, $\frac{54 \text{ KWH}}{\text{T product}} \times \frac{0.86 \text{ T product}}{\text{T feed}} \times 10{,}500 \frac{\text{Btu}}{\text{KWH}}$ =	488
TOTAL Energy in:	25,088

Thermal efficiency,

$$\frac{\text{Energy out}}{\text{Energy in}} = \frac{22{,}227}{25{,}088} \times 100 = 88.6\%$$

The actual thermal efficiency will depend on the manner of calculating the heating value and the amount of water dried off.

Capital investment to power production ratio, $/KW. For those areas of the country where coal with a fairly high ratio of pyrite to organic sulfur content is available and coal combustion facilities exist, the chemical desulfurization process offers the following capital investment to power ratio:

Basis: One year

Total capital investment for the complex excluding start-up costs and interest on construction capital	$155,050M
Potential power production	
3,300M tons coal $\times \frac{25{,}800\text{M Btu/T}}{10{,}500 \text{ Btu/KWH}} \times \frac{1 \text{ yr.}}{8{,}760 \text{ hrs.}}$	926M KW

$$\frac{\text{Total capital investment}}{\text{Annual power production}} = \frac{\$155{,}050\text{M}}{926\text{M KW}} = \$167/\text{KW}$$

5.3.2 Closely Related Process Studies

It is very important that similar bases be developed when interpreting different studies, and that major differences be recognized when close comparisons are being made. The following studies are related to the process design presented in this report but the bases and methods are enough different that a meaningful quantitative comparison cannot be made using the reported data.

University of Michigan -- A study made by a faculty team of the College of Engineering at the University of Michigan for the Electric Power Research Institute (EPRI) presents a detailed comparison of a large number of clean coal utilization processes[17].

The University of Michigan study presents a flowsheet, capital estimate and operating cost calculation for the reported TRW, Inc., process[1], and it includes economics using a different capital estimating method and costs estimated on the basis of the Federal Power Commission Supply Task Force Utility Financing Method. For a 10,000 short ton/day plant the U of M EPRI study reports total capital of $146 million including working capital, interest during construction and start-up costs. The annual cost for 330 production days including return on rate base, Federal income tax, depreciation and net operating costs amounts to $78.7 million the first year, decreasing to $61.7 million the eighteenth year.

Dow Texas Division -- A cost analysis of the TRW process was developed by personnel of the Texas Division of The Dow Chemical Company[18] for a 2400 short ton/day plant having approximately the same flowsheet as the U of M EPRI report, i.e. only that part of the process from the initial conveyor to the mixer to the final product storage but excluding compaction of product fines and detailed waste sulfate processing. This report showed a capital investment of $29.5

million for the smaller plant and a conversion cost of about $10/short ton for 355 operating days annually. The M. W. Kellogg Company cost models were used.

Kennecott Copper Corporation -- A closely related Oxygen Leaching Process is under development at the Ledgemont Laboratory of Kennecott Copper Corporation[19]. The reported process uses more oxygen and does not make elemental sulfur. A generalized block diagram of the process is given and preliminary scoping economics show somewhat lower capital and operating costs than the U of M EPRI study[17] for the TRW, Inc., process.

Research Triangle Institute -- A survey of stack gas scrubbing alternatives by the Research Triangle Institute[15] for a wide range of coal fired steam and power generation plants showed that, for more than 75% of existing industrial, commercial and institutional boilers, de-pyritized coal at 40 to 60¢/MM Btu additional cost would be competitive with stack gas cleaning.

The Institute also estimated[15] that 23.2% of the coal currently being mined could be satisfactorily processed by mechanical and chemical means to meet present source performance standards. The data are summarized in Table 19. These data are based upon the total domestic coal base. Application of a coal desulfurization process which removes only inorganic sulfur, such as the TRW process, would be restricted by local and/or regional coal characteristics and sulfur removal requirements.

Table 19. SUMMARY OF COAL SUITABILITY TO MEET STANDARDS*

Coal Characteristics	Percent of Recoverable Reserves: Source Performance Stds New	Percent of Recoverable Reserves: Source Performance Stds Present	Percent of 1971 Coal Production: Source Performance Stds New	Percent of 1971 Coal Production: Source Performance Stds Present
Low sulfur coal, no processing re-required	1.6	2.2	9.4	9.8
Cannot be cleaned to meet standards	91.9	82.8	78.6	67.0
Can be cleaned by mechanical and chemical means	6.5	15.0	12	23.2

*Present standard, 688 g SO_2/ GJ (1.6 lb SO_2/MM Btu)
New standard, 516 g SO_2/GJ (1.2 lb SO_2/MM Btu)

For the product coal of the design in this report the present standard would permit 1.03% S and the new standard, 0.77% S, calculated as follows:

$$1.6 \frac{\text{lb } SO_2}{\text{MM Btu}} \times \frac{0.5 \text{ lb S/lb } SO_2}{1 \text{ T Coal/25.8MM Btu}} \times \frac{100}{2000 \text{ lb/T}} = 1.03\% \text{ S}$$

6.0 PROCESS ALTERNATIVES AND THEIR ECONOMICS

The Base Case capital estimate was built up from a comprehensive base of experience within The Dow Chemical Company and by the vendors whose quotations were used. At the levels of development and design represented the precision is reliably estimated such that the capital cost figure has an 80% probability of lying between $120MM and $180MM. This was on the basis of 1973 dollars and economic conditions projected two years using historical norms. It does not include the effects of the increased inflation of 1974 and beyond.

The alternatives in this chapter were not "engineered," and this must be taken into consideration. However, the various cases do show the relative effects of the various hypothetical alternatives.

The development of the economics for alternatives in this chapter utilizes the regions indicated in the Block Flowsheet, Figure 1, to more readily identify and emphasize the effects. Four regional groupings were used with the essentially non-chemical processing regions combined in one group. These are shown below with the included regions or sectors and showing the proportion of treating cost represented as a result of the calculations.

Coal Handling ---------- 27%

I	000	Coal Receiving and Preparation
IV	900	Drying, Compacting, Decantation
V	1000	Product Storage and Shipping

Leaching and Regeneration ---------- 35%

II	100	Mixing
	200	Leaching and Regeneration
	400	Filtration No. 1

Extraction and Washing ---------- 20%

III	500	Extraction
	600	Filtration No. 2 and Decantation
	700	Water Washing
	800	Filtration No. 3 and Decantation
	1400	Distillation
	1500	Vent Scrubbing

Iron Sulfates Removal ---------- 18%

VI	1100	Filtration No. 4, Concentration, Filtration No. 5, Evaporation and Sulfates Drying

After an explanation in Section 6.1 as to how the base case data were distributed, the alternatives are explored according to the above four regional groups.

6.1 BASE CASE, CASE 1

6.1.1 Case 1

The base case economics data are displayed in Table 20 in regional groups. Care was used in proportioning the data among the groups, and the salient features of this proportioning are given below.

Process Capital -- The sector totals were all taken from Table 13. The fraction of each group to the total is given.

Other Capital -- Proportioning of the other capital items was according to overall usage of the process region. These were developed generally as follows:

Buildings and Miscellaneous -- mostly buildings and construction related to chemical processing sectors.

Site and General -- Coal Handling region largest in area. Administration buildings, railroad facilities, road and yard development were heavily assessed against Coal Handling. Maintenance shops more evenly proportioned.

Oxygen Plant -- all to Leaching.

Utilities -- predominantly steam plant plus water supply treatment and cooling. Proportioned according to utility usage.

Allowances -- proportioned according to Process Capital plus the above Other Capital.

Working Capital -- Inventories were proportioned according to appropriate region. Cash and Accounts Receivable were essentially all assigned to Coal Handling.

Capital Related Operating Costs -- Depreciation was re-estimated from Table 14 modified by the capital proportioning discussed above. Maintenance, Insurance and Taxes followed the percentage assignments used previously, viz 4% and 2%. Labor was proportioned from Tables 15, 16 and 27. It is designated as capital related because, for large incremental changes in constructed plant capacity, the labor will be proportional to the fixed capital. General and Administrative costs followed the labor pattern with a slight increase in the main chemical processing regions.

Unit Ratio Based Operating Costs -- These costs were assigned according to consumption or usage. Fuel coal was proportioned according to steam usage. Ash loss represents the weight loss due to FeS_2 removed, and was all assigned to Leaching. Water supply, disposal of treatment plant effluent and cooling tower "blow-down," steam plant ash disposal and waste sulfates disposal, and miscellaneous services costs were spread according to usage.

Coal to Product -- The entire cost of that proportion of the feed coal that ultimately ends up in the product was assigned to Coal Handling so that the chemical processing costs could be clearly identified. When the feed coal to product is subtracted from the total operating cost, the process cost contribution of each region is shown.

Table 20. BASE CASE, CAPITAL AND OPERATING COSTS BY REGION

Region Sectors	All Regions All Sectors	Coal Handling 000,900,1000		Leaching 100-400		Extraction 500-800 1400, 1500		Waste Sulfates 1100	
Fixed Capital	$M	$M	f*	$M	f*	$M	f*	$M	f*
Process Capital	89,037	19,555	0.22	31,911	0.36	23,680	0.27	13,891	0.15
Other Capital,									
Bldgs. & Misc.	10,864	1,630	0.15	5,432	0.50	2,716	0.25	1,086	0.10
Site & General	4,504	2,252	0.50	1,126	0.25	676	0.15	450	0.10
Oxygen Plant	8,130	--	--	8,130	1.00	--	--	--	--
Utilities	20,121	2,730	0.13	1,160	0.06	7,250	0.36	8,981	0.45
Allowances	13,344	2,535	0.19	4,804	0.36	3,470	0.26	2,535	0.19
TOTAL	146,000	28,702	0.20	52,563	0.36	37,792	0.26	26,943	0.18
Working Capital:	9,050	8,640		210		140		60	
Operating Costs:	$M/yr	$M/yr	f	$M/yr	f	$M/yr	f	$M/yr	f
Capital Related,									
Depreciation	12,043	1,722	(0.06)	4,494	(0.085)	3,402	(0.09)	2,425	(0.09)
Maintenance	5,840	1,148	--	2,102	--	1,512	--	1,078	--
Ins. & Taxes	2,920	574	--	1,051	--	756	--	539	--
Labor, Misc. Svc.	6,885	1,655	0.24	2,520	0.37	1,870	0.27	840	0.12
Gen'l & Adm.	270	54	0.20	108	0.40	81	0.30	27	0.10
SUBTOTAL	27,958	5,153	0.20	10,275	0.41	7,621	0.26	4,909	0.13
Unit Ratio Based,									
Coal--to fuel	2,614	340	0.13	--	--	1,046	0.40	1,228	0.47
--to product	29,040	29,040	1.0	--	--	--	--	--	--
--ash loss	2,323	--	--	2,323	1.0	--	--	--	--
H_2SO_4, Chem. Agents	2,066	--	--	2,066	1.0	--	--	--	--
Naphtha	178	--	--	--	--	178	1.0	--	--
Binder	5,610	5,610	1.0	--	--	--	--	--	--
Sulfur, N_2	-917	--	--	-330	0.36	-587	0.64	--	--
Power	2,138	427	0.20	962	0.45	385	0.18	364	0.17
Water, Waste Disp.	2,478	300	0.12	390	0.15	300	0.12	1,488	0.61
SUBTOTAL	45,530	35,717	0.78	5,411	0.12	1,322	0.03	3,080	0.07
TOTAL	73,488	40,870	0.56	15,686	0.21	8,943	0.12	7,989	0.11
Less coal to product	-29,040	-29,040	--	--	--	--	--	--	--
Treating Cost,									
--annual, $M	44,448	11,830	0.27	15,686	0.35	8,943	0.20	7,989	0.18
--$/T product	13.47	3.59		4.75		2.71		2.42	

*f = fraction of all regions where no parentheses are used.

(f) = fraction annual depreciation where figures are in parentheses.

6.1.2 Summary -- The totals from Table 20 are summarized:

	Coal Handling	Leaching	Extraction	Waste Sulfates	Total
Capital, $MM					
Process Capital	19.6	31.9	23.7	13.9	89.1
Other Capital	9.1	20.7	14.1	13.0	56.9
Working Capital	8.6	0.2	0.1	0.1	9.0
Total Capital, including other capital	37.3	52.8	37.9	27.0	155.0
Operating Costs, $MM/yr					
Capital Related	5.1	10.3	7.6	4.9	27.9
Unit Ratio Based, excluding coal to product	6.7	5.4	1.3	3.1	16.5
Total Treating Cost	11.8	15.7	8.9	8.0	44.4
Treating Cost per ton of product	$3.59	$4.75	$2.71	$2.42	$13.47

The relative size of the above numbers provides an index as to where appreciable capital or operating cost reductions might be made.

6.1.3 Effect of Production Rate

Estimates for the capital and operating costs for plants of different sizes may be made using the subtotals from Table 20. The development and use of such an estimating procedure is shown in Table 21. The assignment of scaling exponents is shown with the capital cost data for the Base Case. The Coal Handling and Waste Sulfates regions were combined as were the Leaching and Extraction regions. The capacity of the Coal Handling and Waste Sulfates regions could be increased by utilizing larger equipment and so these were assigned a scaling exponent of 0.7 for scaling up and 0.65 for scaling down. The Leaching and Extraction regions are so dominated by the reactors that it is likely that they would be scaled in 100-130 T/hr increments with some sharing of equipment, so a scaling exponent of 0.85 was assigned. The Other Capital is made up of components that could be expanded efficiently, so 0.65 and 0.7 exponents were used.

For the alternative cases in the lower section of the table production rates of one half and two times the Base Case were chosen. Thus, the Coal Handling and Waste Sulfates regions were estimated as follows:

Production Rate M T/yr	Calculation	Process Capital $MM
3300		33.4
1650	$33.4 \times (0.5)^{0.65} = 33.4 \times 0.636 =$	21.2
6600	$33.4 \times (2.0)^{0.70} = 33.4 \times 1.63 =$	54.4

The Capital Costs were estimated for each group and totalled down and across. Then the production costs were estimated.

The Capital Related Costs (CRC) from Table 20 are shown for the Base Case and compared to total capital (TC). Ratios of CRC/TC of 0.18 and 0.20 were obtained and used. The Unit Ratioed Costs (URC) are not much affected by production rate, so were used as constant $/T values for all cases. These costs were estimated and totalled.

A plot of the effect of production rate for plants operating at design capacity is shown in Figure 31. The open points represent production multiples of 1,2,1/2 and 1/4 times the Base Case. The short steeper curves represent the effect of production rate changes on the operating cost for the base plant and a half-size plant without changes in respective design rate capital, i.e., the Capital Related Costs remain constant on an annual basis while the Unit Ratioed Costs remain constant on a unit basis. The net result of these calculations is to show that the costs are not greatly affected by volume of production in the vicinity of the Base Case, e.g., for a 100% increase in rate, costs decreased only 9%; for a 50% decrease in rate, costs increased 13%. For smaller plants, debottlenecking can appreciably reduce costs.

Table 21. EFFECT OF PRODUCTION RATE ON TREATING COST FOR VARIOUS SIZE PLANTS

	Coal Handling plus Waste Sulfates	Leaching plus Extraction	Total of All Regions
Base Case			
Production Rate (P), M T/yr	3300	3300	3300
Process Capital (PC), $MM	33.4	55.6	89.0
scaling exponent (e)	0.7[a]	0.85[a]	--
Other Capital (OC), $MM	22.2	34.8	57.0
scaling exponent (e)	0.7[a]	0.7[a]	--
Total Capital (TC), $MM	55.6	90.4	146.0
Capital Related Costs (CRC)			
CRC, $MM/yr	10.1	17.9	28.0
CRC/TC	0.18	0.20	0.19
CRC, $/T	3.05	5.42	8.47
Unit Ratioed Costs (URC), $/T	2.96	2.04	5.00
Total Operating Cost (TOC), $/T	6.01	7.46	13.47
Alternatives			
P, M T/yr	1650	1650	1650
PC, $MM	21.2	30.7	51.9
OC, $MM	14.1	22.1	36.2
TC, $MM	35.3	52.8	88.1
CRC, $MM/yr	6.4	10.5	16.9
$/T	3.85	6.40	10.25
URC, $/T	2.96	2.04	5.00
TOC, $/T	6.81	8.44	15.25
P, M T/yr	6600	6600	6600
PC, $MM	54.4	100.6	155.0
OC, $MM	36.2	56.7	92.9
TC, $MM	90.6	157.3	247.9
CRC, $MM/yr	16.3	31.5	47.8
$/T	2.47	4.77	7.24
URC, $/T	2.96	2.04	5.00
TOC, $/T	5.43	6.81	12.24

[a]For the scaling factors the following were used:

$(2.0)^{0.7} = 1.63, \quad (2.0)^{0.86} = 1.81$

$(0.5)^{0.65} = 0.636, \quad (0.5)^{0.86} = 0.553$

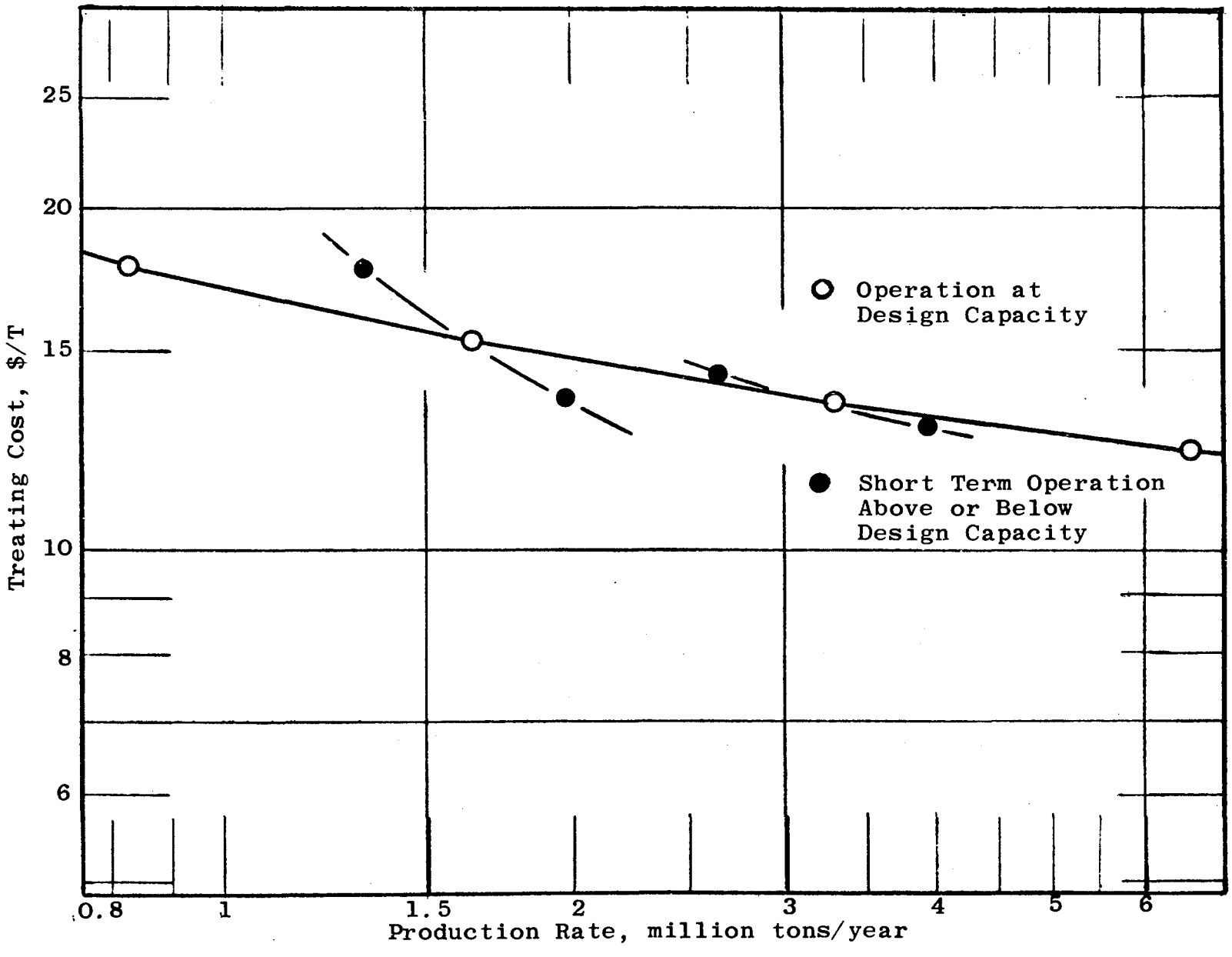

Figure 31. Production Rate vs Treating Cost

6.2 COMPREHENSIVE ALTERNATIVE CASES, CASES 2, 3 and 4

Cases are developed below showing how interrelated process changes and accounting procedures could greatly reduce the apparent cost of installing chemical desulfurization. Example calculations for the first three cases are given in Section 10.7.4.

Assumptions:

The following letters are used in the summaries of capital and cost reductions to designate the manner in which the base case capital and operating cost items were adjusted:

(a) eliminate, facilities or personnel in similar jobs already exist

(b) greatly reduce, share personnel or facilities after modification

(c) accept an allocation of a larger facility

(d) adapt and use a different processing step or system

6.2.1 Coal Handling

Case 2 CH

Assume that the chemical desulfurization process is installed on the site of an existing complex that has coal handling facilities. The new facilities must bear their share of the new capital and operating costs. An example of such an installation is given in the Appendix, Section 10.7.3. Arbitrary, but realistic, assumptions have been chosen, and a case is built up for a plant with over twice the coal receiving capacity of the base conceptual design with coal washing and some drying facilities, plus storage and pulverizing facilities at an on-site powerhouse that will consume up to 20,000 tons of coal per day.

No new receiving and storage areas or labor will be needed. Some conveying required to new site. Pulverizers modified

to grind wet fines. Grind only through 14 mesh[3]. Share dryers but only dry down to about 13.4% moisture rather than 4%, thus reducing drying capacity by as much as 50%, e.g., with 22.8% moisture from the final coal filtration,

$$\frac{22.8 - 13.4}{22.8 - 4.0} = \frac{9.4}{18.8} = 0.50$$

Eliminate compaction and use binder fluid described in Section 4.4.2.4 to minimize dust loss in transfers. Share product storage and build storage equivalent to 50% of base case. Utilities and services supplied at 70% of the cost used in the Base Case.

Capital Reduction, $M	
Process Capital,	
Receiving(a) and Preparation(b)	3,000
Drying(b)	2,600
Compaction, eliminate compactor(a), keep tank and pumps(d)	1,200
Product Coal Handling(b)	1,700
Other Capital,	
Site, Building, General(c)	2,800
Utilities(b), less steam, lower unit capital	1,700
Allowances, 4% of reductions	500
Total Fixed Capital Reduction	13,500

Ratio to Base Case Coal Handling($28,702M) 0.47

Working Capital Reduction, $M	
Cash and Accounts Receivable(a,d)	6,000
Coal Inventories(d)	600
Other Materials and Supplies(b)	100
Total Working Capital Reduction	6,700

Operating Costs Reduction, $M/yr		
Capital Related,		
Labor and G&A(a,b,c)	1,200	
Other Capital Related	1,620	
Unit Ratio Based,		
Binder(d)	4,170	
Other Unit Ratioed; Services and fuel coal equivalent(c)	320	
Total, Operating Costs Reduction	7,310	
Effect on Coal Handling Region (7310 ÷ 3300)		-$2.22/T
Alternative Unit Cost		
Base Case Coal Handling		3.59
Less Reductions		-2.22
Case 2 CH, Coal Handling		$ 1.37/T

Case 3 CH

If it is assumed that chemical desulfurization is being added to the coal preparation complex of a large coal user, e.g., a utility or coking plant, for the purpose of decreasing the total sulfur content of the coal while improving the yield (usable coal/coal received), then it is conceivable that the entire operating cost of the Coal Handling region could be absorbed into other accounting functions.

This is not too extreme an assumption. In such a large complex essentially all of the coal handling facilities, working capital, personnel, and services would already exist or be able to be assembled with little more than normal project maintenance, service costs and disruptions.

Case 3 CH, Coal Handling nil $/T

See also Cases 3 CP and 3 U which approach this concept differently.

Case 4 CH--Merchant Coal

In the above context chemical desulfurization could be added to a large merchant coal preparation plant with relatively minor cost increases for Coal Handling. In this case coal fines stabilization could be employed as described in Section 4.4.2.4. Further elaboration would be needed but it is possible to adequately protect against fine coal losses in storage, transferring and transit for less than $0.50 per short ton[13].

Case 4 CH, Coal Handling	$0.60/T

6.2.2 Chemical Processing

Case 2 CP

Continue developing the Chemical Processing steps to match the Coal Handling of Case 2 with the same assumptions where applicable; 14 mesh topsize coal, utilities and services at 30% lower cost. Analysis of the job functions of Table 27 shows that more than half of the Administrative and Services personnel would not be required for this case, as either these services would not be needed for selling and shipping coal or they could be obtained from personnel already employed by the utility. The net reduction in labor is estimated as 25%.

Other alternatives under development or contemplated are included in the discussion by region below.

Assumptions:

Leaching -- Very fast reacting coals[3] and complete foaming control in the mixer greatly reduce the required number of reactors and cut process capital in half (See 6.3 Case 5).

Extraction -- Elemental sulfur remaining after the leach step is cut in half by control of acidity and oxidation conditions in the leach process[19]. A solvent with a very high sulfur solubility is used above 120°C in counter current flow[3,10]. Capital of Sector 1400 is cut in half.

Waste Sulfates -- Part of the waste is reprocessed to recover salable products. See Table 22[16]. The remainder is disposed of in an abandoned section of a nearby deep mine[16]. One half of the capital is removed by elimination or by charging its cost to the reprocessing.

Capital Reduction, $M		
Process Capital,		
Leaching(d)	15,000	
Extraction(d)	2,500	
Waste Sulfates(d)	6,500	
Subtotal, Process	24,000	
Other Capital,		
Site, Buildings, General	3,400	
Utilities		
Waste Sulfates(b,d)	4,490	
Remainder(b)	2,520	
Allowances		
Process and Other Capital Reductions	2,750	
Subtotal, Other	13,160	
Total Fixed Capital Reductions	37,160	
Ratio to Base Case Chemical Processing ($117,298M)		0.32
Operating Costs Reduction, $M/yr		
Capital Related,		
Labor and G&A(b)	1,360	
Other Capital Related	5,550	
Unit Ratio Based(b),		
Utilities, Waste Disposal, Coal Equivalent to Fuel & Ash Loss, Less Reduced Sulfur Credit	1,550	
TOTAL, Operating Cost Reduction	8,460	
Effect on Chemical Processing Regions (8460 ÷ 3300)		-$2.56/T
Alternative Unit Cost		
Base Case Chemical Processing		$9.88/T
Less Reductions		2.56
Case 2 CP, Chemical Processing		$7.32/T

There would be an increase in product tonnage corresponding to the fuel coal equivalent of the lower steam requirements. Assume that this amounted to 30% of the fuel coal, 90M tons per year, or an increase of 2.7%. From Figure 30 this would represent about a 1% improvement in ROI. The profit before tax is $18,911 M/yr at 12.3% ROI (Table 19), so for an increase of 1% to 13.3% ROI, for 3300 M T/yr the improvement could be:

$$18{,}911 \left(\frac{0.133}{0.123} - 1.0\right) \div 3300 = \$0.47/T$$

This improvement could also be expressed as a decrease in cost.

Achievable Treating Cost, full production,	
Case 2 CP, Chemical Processing($7.32-0.47)	$6.85/T
Case 2 CH, Coal Handling	1.37
	$8.22/T, or 33¢/MM Btu

Table 22. VALUE AND DISPOSITION OF BY-PRODUCTS FROM COAL LEACHING[a]

By-product	By-product production for plants treating 100 and 420 T of coal/hr.[b]			U.S. Market		Most likely disposition for by-product from numerous plants
	100	420				
	T/hr	T/hr	1,000 Tons/yr	1,000 T/yr	$/T	
Ferric Sulfate	3.7	15.5	122	100	37	Haul to an abandoned mine or quarry for disposal at $2.50/T or build a processing unit to upgrade to iron oxide if the process economics and markets warrant it.
Ferrous Sulfate	4.3	18.1	142	112	24	
Iron Oxide: Pigment Grade	6.0	25.2	198	140	300	Small amount could go into pigment market.
Iron Ore Grade				45,000	10	Entire output could be shipped to steel mills within 100 mile radius if the quality was acceptable.
Sulfur, Elemental	1.2	5.0	39	10,500	12 to 32	Sulfur should be marketable if there are customers within a 100 mile radius. Could also be collected at a central river-front location and shipped by barge.

[a]Adapted from data by Liang[16]

[b]1 T = 1 short ton = 907.2 kg
1 metric ton = 1,000 kg

Case 3 CP

Using the assumptions for Case 3 CH Coal Handling, i.e. decreasing the total sulfur content while improving the coal yield, the original large plant might be facing a situation where an appreciable fraction of the coal from the existing mechanical separation facilities could not be used. In this event some value for the unusable coal at that point plus the cost of disposal could be credited to the chemical processing facility. Example calculations for such a hypothetical situation are given in Case 3CP, Section 10.7.4 with a suggestion that a credit of $2.00/T be used in lieu of a larger calculated, but indeterminate, credit.

Case 3 CP, Chemical Processing ($6.85-2.00) $4.85/T

Case 3 U

The ideas presented in Cases 2 and 3 are approached from the standpoint of overall coal costs to the utility plant in Case 3 U. The details are given in Section 10.7.4 and the cases may be summarized as follows:

Cases Compared	2 CH, 2 CP	3 CH, 3 CP	3 U CH, 3 U CP
Product Coal, MM TPY	3300	3300	4510
Fixed Capital, $M			
Coal Handling	15.2	nil	25.3
Chemical Processing	80.1	80.1	80.1
Total Unit Costs, $/T			
Coal	8.80	8.80	8.80
CH Operating & Coal Loss	1.37	nil	2.91
CP Operating	6.85	4.85	5.36
TOTAL Operating Cost	17.02	13.65	17.07
Treating Cost	8.22	4.85	8.27

Recall that Case 2 allows some charges to be picked up by the existing plant and provides for some improvements in technology. Case 3 uses the same technology but charges all of the coal

handling to the plant plus another $2.00/T for processing the middlings. From the example calculation of Case 3 U it is apparant that the economics and accounting practices for the rest of the plant play an important part in the determination of the treating cost for upgraded coal.

Case 4 CP -- Merchant Coal

A complete coal preparation plant could take advantage of the same type of cost reductions described in 2 CP and 3 CP; however, for this example a less optimistic view was chosen -- no appreciable reduction in Utilities Capital and Cost and only 25% reduction in sulfur credit and all other capital and cost items. See 10.7.4 Case 4 CP.

Case 4 CP Chemical Processing ($7.73-$2.00) $5.73/T

6.2.3 Combinations and Extensions

The total treating costs for various combinations of these comprehensive cases would be as follows, in $/T:

		Coal Handling	Chemical Processing	Total
Base Case,	Case	1	1	
	Cost	3.59	9.88	13.47

Utility Cases - costs added to existing plant for chemically desulfurized coal:

All facilities bear their share of the cost and share utilities, fast reacting coal, new developments in extraction and sulfates reprocessing.

Case	2 CH	2 CP	
Cost	1.37	6.85	8.22

As above, but chemical desulfurization plant is not charged for coal handling as plant wishes to decrease sulfur, improve yield, so allows credit for less fuel coal consumed and for refuse saved.

Case	3 CH	3 CP	
Cost	0	6.85 - 2.00	4.85

Utility Case - Costs spread across all coal used:
Above case stated on the basis of the entire coal handling and cleaning operation for the utility plant.

Case	3 U CH	3 U CP	
Cost	2.91	5.36	8.27

Merchant Case - costs added to existing plant for chemically desulfurized coal:

Add to existing facilities, fast reacting coal as in 2 CP but less optimistic cost reduction. Use 3 CP type credit.

Case	4 CH	4 CP	
Cost	0.60	7.73 - 2.00	6.33

The Merchant Coal example is an illustration of how the foregoing discussion and calculation summaries can be readily used to build a case to a certain requirement.

The above combination cases and others are plotted in Figure 32 and further described following the plot.

If a chemical desulfurization plant were installed at a utility plant distant from the coal fields the freight cost of the material later disappearing as ash loss could raise the cost of this item 50% or more. Proximity to a source of waste sulfuric acid could provide a compensating cost reduction.

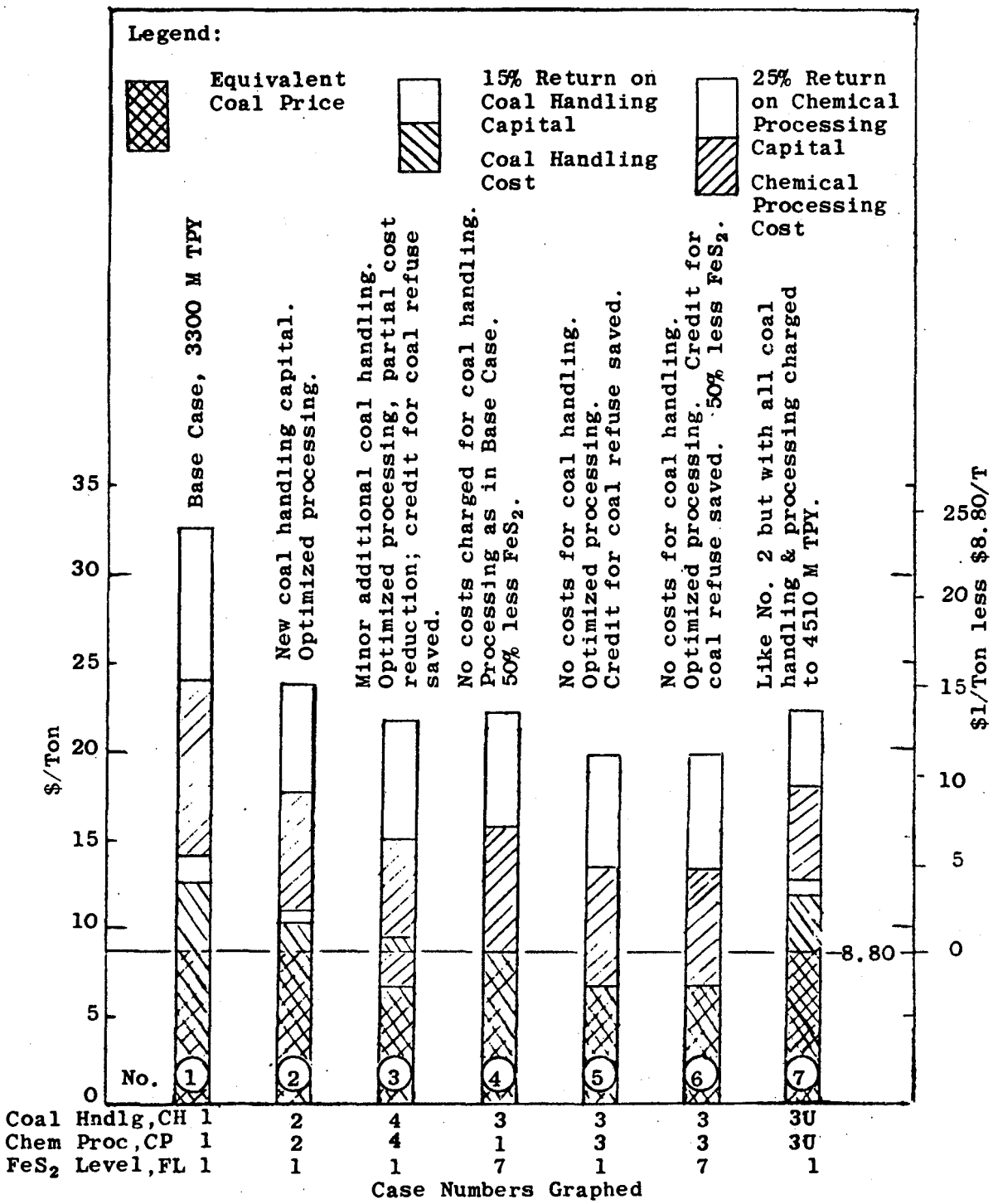

Figure 32. Effect of Basic Coal Price, Coal Handling, Chemical Processing and Return on Total Capital (ROTC) on Product Costs

Figure 32 (contd.) Summary of Calculations

Example No. (see Bars on Graph	1	2	3	4	5	6	7
Product Coal, M TPY	----------	----------	3300	----------	----------	----------	4510
Coal Receiving and Handling (CH)							
CH Case No.	1	2	4	3	3	3	3 U
Capital, $MM							
Fixed	28.7	15.2	nil	nil	nil	nil	25.3
Working	8.6	1.9	nil	nil	nil	nil	1.9
TOTAL	37.3	17.1	nil	nil	nil	nil	27.2
ROTC(15%), $/T	1.70	0.78	nil	nil	nil	nil	0.90
Costs, $/T							
Coal	8.80	8.80	8.80	8.80	8.80	8.80	8.80
Operating	3.59	1.37	0.60	nil	nil	nil	2.91
ROTC	1.70	0.78	nil	nil	nil	nil	0.90
TOTAL CH	14.09	10.95	9.40	8.80	8.80	8.80	12.61
Chemical Processing(CP) and FeS_2 Level(FL)							
CP Case No.	1	2	4	1	3	3	3 U
FL Case No.	1	1	1	7	1	7	1
Capital, $MM							
Fixed	117.3	80.1	89.4	86.3	80.1	80.1	80.1
Working	0.4	0.4	0.4	0.4	0.4	0.4	0.4
TOTAL	117.7	80.5	89.8	86.7	80.5	80.5	80.5
ROTC(25%), $/T	8.91	6.10	6.80	6.57	6.10	6.10	4.46
Costs, $/T							
Coal, CH	14.09	10.95	9.40	8.80	8.80	8.80	12.61
Operating	9.88	6.85	5.73	6.82	4.85	4.82	5.36
ROTC	8.91	6.10	6.80	6.57	6.10	6.10	4.46
TOTAL	32.88	23.90	21.93	22.19	19.75	19.72	22.43

Using flocculants, moving the water wash ahead of extraction and feeding drained extraction filter cake to the dryers[3] could result in some savings in the filtration and decantation sectors and reduce steam costs for driving off naphtha instead of water. These savings would be balanced against flocculant cost and increased naphtha usage (less naphtha fuel value).

Figure 32 shows a bar graph of several combination cases. An equivalent coal price of $8.80/T was used for all cases except that where there is a $2.00/T credit for a Case 3 CP situation, this is portrayed as decreasing the coal cost to the process. A table summarizing the calculations is given as the second page of Figure 32. Following are examples of what is shown in $/T:

	Base Case	Cases 3 & 7*
Coal Price	8.80	8.80
Coal Handling,		
Cost	3.59	nil
15% ROTC	1.37	nil
Chemical Processing,		
Cost	9.88	4.82
25% ROTC	8.91	6.10
	32.88	19.72

A number of such cases can easily be approximated from the various unit costs given in this report. Such approximations can indicate the value of obtaining further data. Cases involving various iron pyrite levels are given in the next section.

*Case 2 CP capital and Case 7 cost chosen (less $2.00 credit of Case 3 CP), could be $1.00/T less.

6.3 LEVEL OF IRON PYRITE, CASES 5 TO 10

The costs in this section reflect a more detailed analysis of process variables and equipment sizes than those presented in the previous sections of this chapter.

Based on the computer printout represented in Table 8, Section 4.2.4, the data were plotted in Figure 33 as the log of the weight fraction of residual FeS_2 versus the log of the number of reactor sections. For the system of continuous reactors in parallel used in the base case the data for the mixer and the ten well mixed sections in the reactors were taken from stepwise output internal to Program B, described in 10.4.1.

About 14% of the FeS_2 is reacted in one-half to one hour in the mixing tank at 102°C (215.6°F). Then in the first section of the parallel reactors the reaction is brought to about 43% of completion in another hour. The reactors have final conditions of 5.6 kg/cm^2 (80 psia) and 150°C (302°F).

Described below are several cases for differing FeS_2 content in the feed or differing degrees of removal. The same coal rates were assumed so there would be no change in the Coal Handling region. Also, for 6.7% FeS_2 or less, the liquid to coal ratio was assumed to be unchanged, so there would be little or no change in the filtration, extraction and washing equipment. The 20% foam disengaging volume in the reactors was maintained for volumes less than the Base Case.

The adjustments that could be expected in capital investment are developed in Table 23. The factors by which the major chemical equipment in affected sectors differs and

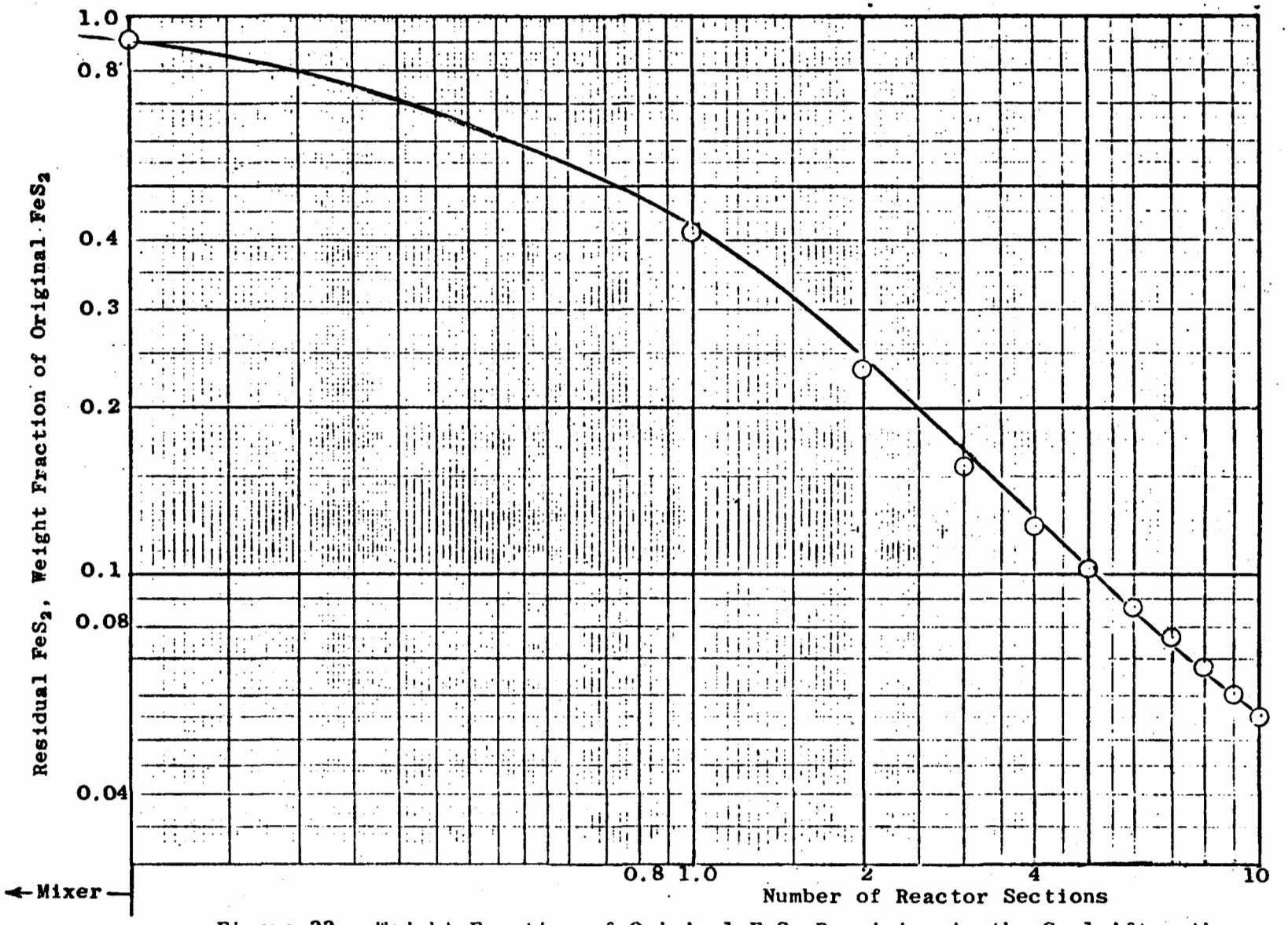

Figure 33. Weight Fraction of Original FeS_2 Remaining in the Coal After the Mixer and After Each Section of the Parallel Reactors

the factors to be used for scaling the cost of these sectors are given. Subtotals for each region are shown and the total fixed capital is given.

The operating cost changes are developed in Table 24. The changes shown in Table 23 are expressed in Table 24 as percent change in FeS_2 removal and fraction change in Chemical Processing capital. The use of these is detailed in the description at the left in the table. The capital related cost changes predominate. The cost changes related to coal consumed for fuel and for purchased power are tied to equipment changes and so were adjusted according to capital changes. All other costs were calculated on the basis of FeS_2 removal changes.

The rationale for each of the various cases of different starting FeS_2 levels or different degrees of removal is given below. The operating cost reduction estimates follow the pattern of Table 21. The effect is shown in Figure 34.

<u>Case 5</u> ..... 6.7% FeS_2, 90% removal
0.67% FeS_2 residual

From Figure 33, 50% of Base Case reactor volume is required. The reactors were reduced to one-half Base Case capacity. Distillation and waste sulfates equipment were little affected by the 5% reduction in FeS_2 removal. In practice, the filter would probably be Base Case size and more filtrate would be recycled so that a more concentrated solution could be fed to the evaporator.

Capital Reduction -as percent of Chemical Processing, 10%	$12 MM
Operating Cost Reduction	$0.91/T

Case 6 ..... 6.7% FeS_2, 14.5% removal
5.7% FeS_2 residual

From Figure 33, no reactors used other than the mixer. An allowance of $2MM was made for the solution regeneration facilities for a hypothetical case where all of the reaction occurred in the mixer. The distillation and waste sulfates sectors were reduced to 20% of the Base Case as were utilities.

This case and Cases 8 and 10 are used to define the lower limits of sulfur removal in Figure 34, the plot of the cases in Table 23.

Capital Reduction -as percent of Chemical Processing, 48%	$56 MM
Operating Cost Reduction	$5.38/T

Case 7 ..... 3.35% FeS_2, 90% removal
0.34% FeS_2 residual

Assumed one half the initial FeS_2 content and the same percent removal as in Case 5. Should require 50% of Base Case reactor volume, but 40% was assumed because it should be possible to recycle iron sulfate back through the mixer to build up its concentration. Distillation and waste sulfates capital and cost would be about half of Case 1 because of smaller absolute levels of FeS_2 dissolved.

Capital Reduction -as percent of Chemical Processing, 26%	$31 MM
Operating Cost Reduction	$3.06/T

Case 8 ..... 3.35% FeS_2, 14.5% removal
2.86% FeS_2 residual

This case bears the same relationship to Case 7 that Case 6 does to Case 5, i.e., a definition of the lower limits of sulfur removal for Figure 34.

Capital Reduction -as percent of Chemical Processing, 53%	$62 MM
Operating Cost Reduction	$ 5.90/T

Case 9 ..... 13.4% FeS_2, 95% removal
0.67% FeS_2 residual (to <0.4%)

Twice as much iron sulfate solution required to maintain the same stoichiometry, doubled equipment size for all Chemical Processing except washing, filtration and vent scrubbing as well as for utilities in Chemical Processing.

Capital Increase -as percent of Chemical Processing, 52%	$61 MM
Operating Cost Increase	$ 5.98/T

Case 10 ..... 13.4% FeS_2, 14.5% removal
--by proportion, 11.5% FeS_2 residual
--used, 6.7% FeS_2 residual

Case chosen to augment Case 9. No data have been presented for this particular case but it is believed that such a high level would provide much exposed FeS_2 to be dissolved in the mixer. This could be as much as 50% in three times the residence time in the mixer. Data for some coals show over 80% FeS_2 reacting in the first hour of the reacting time[3].

Capital Reduction -as percent of Chemical Processing, 36%	$42 MM
Operating Cost Reduction	$2.81 to 4.14/T

Table 23. SIZE AND CAPITAL COST FACTORS FOR VARIOUS IRON PYRITE LEVELS

Case No.		1	5	6	7	8	9	10
Initial FeS_2, %		6.7	6.7	6.7	3.35	3.35	13.4	13.4
Percent Removal		95	90	14.5	90	14.5	95	14.5
Final FeS_2, %		0.34	0.67	5.7	0.34	2.86	0.67	11.5
Region & Sector	*e	$MM	**Size and Cost Factors Other than 1.0, also Capital Subtotals					
Coal Handling, $MM		19.6	19.6	19.6	19.6	19.6	19.6	19.6
Leaching								
100 Mixing	0.55	1.0					2.0,1.5	3.0, 1.8
200 Reaction	0.9	24.0	0.5,0.58	0.1,0.13	0.4,0.44	0.1,0.13	2.0,1.87	0.15,0.18
400 Filtration #1	0.9	6.9					2.0,1.87	
SUBTOTAL, $MM		31.9	21.7	9.9	21.3	9.8	59.3	12.9
Extraction								
500 Extraction	0.55	1.0					2.0,1.5	
600 Filtration #2	0.85	7.3					2.0,1.8	
700,800,1500 Wash,Filt.#3		10.4						
1400 Distillation	0.5	4.9	0.95,0.97	0.2,0.45	0.5,0.71	0.1,0.32	2.0,1.4	0.4,0.63
SUBTOTAL, $MM		23.6	23.4	20.7	22.1	20.2	31.8	21.4
Waste Sulfates								
1100 Waste Sulfates	0.7	13.9	0.95,0.96	0.2,0.32	0.5,0.62	0.1,0.20	2.0,1.6	0.4,0.52
SUBTOTAL, $MM		13.9	13.3	4.5	8.6	2.8	22.2	7.2
Other Capital								
1900,3000 Bldgs.,Site,Gen'l		15.4						
2000 Utilities	0.5	28.3	0.95,0.97	0.2,0.45	0.4,0.63	0.1,0.32	2.0,1.4	0.4,0.63
Allowances		13.3						
SUBTOTAL, $MM		57.0	56.2	35.7	43.7	32.1	73.7	42.5
TOTAL, $MM		146.0	134.2	90.3	115.1	84.4	206.5	103.5

*e = exponent used in cost factor

**(0.5,0.58) means that the size of the equipment is 0.5 x Case 1 and the capital cost is estimated to be 0.58 x Case 1.

Table 24. OPERATING COST CHANGES FOR VARIOUS IRON PYRITE LEVELS

Case No.	1	5	6	7	8	9	10[a]
Initial FeS_2, %	6.7	6.7	6.7	3.35	3.35	13.4	13.4
Percent Removal	95	90	14.5	90	14.5	95	14.5(50.)
Final FeS_2, %	0.34	0.67	5.7	0.34	2.86	0.67	11.5(6.7)
Percent Change in FeS_2 Removal, $-(1-(\frac{\text{Initial } FeS_2\text{-Final } FeS_2}{\text{Base, Initial-final=6.36}}))\times 100$	--	- 5.2	-86.0	-52.7	-92.3	+100.2	-70.1(+5.4)
	Base Case	------ Changes from Base Case Shown below ------					
Capital, $MM							
Working Cap. & Coal Handling	37.7						
Chemical Processing(CP)	117.3	-12	-56	-31	-62	+61	-42
Change as Fraction of CP Capital		- 0.10	- 0.48	- 0.26	- 0.53	+ 0.52	- 0.36
Operating Cost (TOC), $/T							
Coal Handling, (CH),		------ No change for these cases ------					
From Table 20	3.59						
Chemical Processing (CP)		------ Changes from Base Case ------					
Capital Related (CRC), Section 6.1.2; (27.9-5.1) ÷ 3.3	6.91						
0.194 x CP Capital Change ÷ 3.3		- 0.70	- 3.29	- 1.82	- 3.64	+ 3.59	- 2.47
Unit Ratioed (URC) (Excluding coal to product)							
Fuel & Power x Fr. Cap. change	1.21	- 0.12	- 0.58	- 0.31	- 0.64	+ 0.63	- 0.44
All Other x % FeS_2 change/100	1.76	- 0.09	- 1.51	- 0.93	- 1.62	+ 1.76	- 1.23(+0.10)
TOTAL TOC(CP) or change	9.88	- 0.91	- 5.38	- 3.06	- 5.90	+ 5.98	- 4.14(-2.81)
Total Operating Cost, $/T		------ New cost levels shown below ------					
Chemical Processing	9.88	8.97	4.50	6.82	3.98	15.86	5.74(7.07)
Coal Handling	3.59	3.59	3.59	3.59	3.59	3.59	3.59 3.59
TOTAL	13.47	12.56	8.09	10.41	7.57	19.45	9.3 (10.66)

[a]See description of Case 10. Final FeS_2 is expected to be below 11.5%.

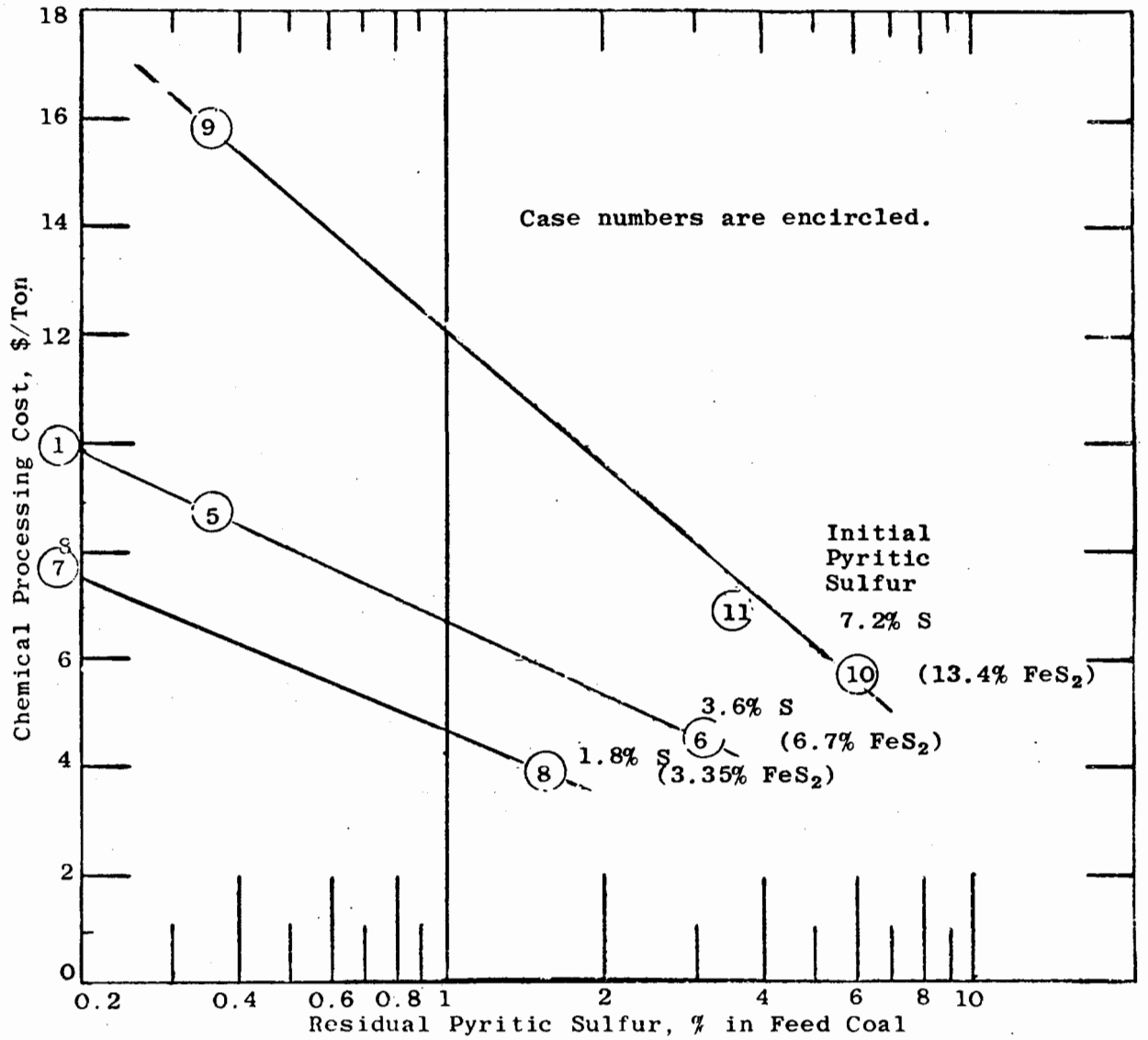

Figure 34. Chemical Processing Costs for Various Levels of Initial and Residual Pyritic Sulfur Content

6.4 MISCELLANEOUS COST EFFECTS

Aggressive process development will undoubtedly decrease the overall capital and operating costs for this process, excluding the effects of inflation. As fuel prices continue to increase it should be possible to show increasing improvements in the relative economics of desulfurization.

Capital Reductions -- From Table 20 it can be seen that annual Capital Related Costs amount to about 15% of Fixed Capital. A savings of $1 million in capital will be reflected in $150,000 per year, or 45¢/T, in operating costs. Thus the potential annual benefit of eliminating the 20% foam disengagement volume in the reactors and decreasing the liquid to solids ratio slightly in Sector 200 would be (see Section 10.6.2, sheets 4 & 5):

$$\$21.4MM(1-(0.8)^{0.7}) = \$21.4MM(1.0-0.856) = \$3.08MM$$

At 45¢/T per $1MM reduction this would be $1.39/T.

The cost savings for capital reductions can thus be compared with corresponding required operating cost increases. As an example, assume the filter sizes in Sector 800 can be reduced by 40% by the use of flocculants and that redesigns of Sector 700 would allow inclusion of a settler with no increase in capital cost.

Projected capital related cost savings on reductions in purchase cost of filters and accessories (Section 10.6.2, sheets 11 & 12):

$$(\$0.515MM \times 4)(1-(0.6)^{0.7}) \times \$0.45/(T)(\$1.0MM)$$
$$= 2.6MM \times 0.30 \times 0.45/1.0MM = \$0.35/T, \text{ saving}$$

First approximation for flocculant cost (Section 4.4.2.2(a) and Table 17b):

0.05 lb of flocculant/T x $0.50/lb = $0.025/T

The cost of using an effective flocculant appears to be very favorable with respect to the potential cost savings related to capital. Data to allow a more vigorous evaluation of attractive potential trade-offs should be obtained from vendors' tests and pilot plant operations.

Raw Material Prices -- The impact of price variation, and of raw material usage changes, can be estimated using the data in Table 17B and the desired price or unit ratio.
data in Table 17B and the desired price or unit ratio.
Prices are shown below for the major raw materials, all in short tons. More recent prices are given in the right hand column and explained in parentheses.

Cost Item	Tons raw material / Ton coal	1973 $/T	1974 $/T
Coal received (Typical f.o.b., mine)	1.17	8.80	9.50
Nitrogen credit (10% of package plant price)	-0.14	0.70	1.00
Sulfuric acid (100%,tanks,works,E Coast[20])	0.016	36.00	47.70
Naphtha (Petroleum,tanks,NJ,0.67sp gr[20])	0.0012	45.00	100.00
Sodium lignin sulfonate (bags, c.l., works[20])	0.017	100.00	95.00
Sulfur credit (f.o.b. vessels, Gulf ports[20])	-0.015	12.00	47.00

Example effects:	cents/ton
Coal 1.17 x (9.50 - 8.80)	82
Nitrogen credit -0.14 x (1.00 - 0.70)	-4.2
Sulfuric acid 0.016 x (47.70 - 36.00)	18.7
Naphtha, doubled consumption 2 x 0.0012 x (100 - 55)	13.2
Sulfur credit -0.015 (47-12)	-52.5

As can be seen, the impact of moderate price changes in the non-coal raw materials is minor and the increases could be balanced by an increase in by-product sulfur price.

Oxygen could have been included as a purchased raw material, but at the low return shown in Table 18B it is unlikely that a "make vs buy" study would show purchasing to be favorable. This would need to be reevaluated if a higher return case were anticipated.

Another case that should be examined but which is beyond the scope of this report is the utilization of high sulfur coal refuse for the steam generation plants. In the base case 79.2¢/T, dry basis, represents product coal used for fuel at raw material coal price, or $2.6MM per year. This will increase as coal prices increase; thus a cost of $2.6MM per year could be expended in a merchant coal plant for the operating cost of a suitable means to utilize high sulfur coal, e.g. stack gas scrubbing or high-sulfur fuel combustor techniques. This would permit the large coal preparation plant to take advantage of economies for a scrubber system on a large steam generation plant running at a steady rate[15] and to pass these economics along to the smaller coal user for whom scrubbing might be impractical.

Cost Escalation -- In addition to considering process alternatives it may be desired to project costs several years into the future in order to compare the Base Case with other options. Two cost indexes that are frequently used by process engineers are plotted in Figure 35. These are the ENR Building Cost Index[33], based on construction wage rates and material costs in 20 cities in the U.S., and the CE Plant Cost Index[34], based on a variety of industry data. The year end index is published the first week in January for the ENR Index and in April for the CE Index. These are different from the annual averages[35]. Figure 36 is a plot of the average value of bituminous coal, F.O.B. mines[36]. The data are given below. The projections reflect the thinking of cognizant departments of The Dow Chemical Company.

CONSTRUCTION COST ESCALATION

Year End	ENR Bldg. Cost[33]	ENR Factor	CE Plant Cost[34]	CE Factor
1969	802	1.00	121.3	1.00
1970	866	1.08	129.0	1.06
1971	1005	1.25	134.0	1.10
1972	1090	1.36	139.1	1.15
1973	1158	1.44	148.2	1.22
1974	1240	1.55	177.8	1.47
1975 (Est.)		1.69		1.69

BITUMINOUS COAL PRICE INCREASES[36]

Year End	Ave., U.S., $/T	U.S. Factor	OH, PA, WV, Ave., $/T	OH, PA, WV Factor
1968	4.67	0.94	4.88	0.93
1969	4.99	1.00	5.23	1.00
1970	6.26	1.25	6.65	1.27
1971	7.07	1.42	7.77	1.49
1972	7.66	1.54	8.35	1.60
1973	8.42	1.69	9.83	1.88
1974 (Est.)		1.85		2.04
1975 (Est.)		2.03		2.20

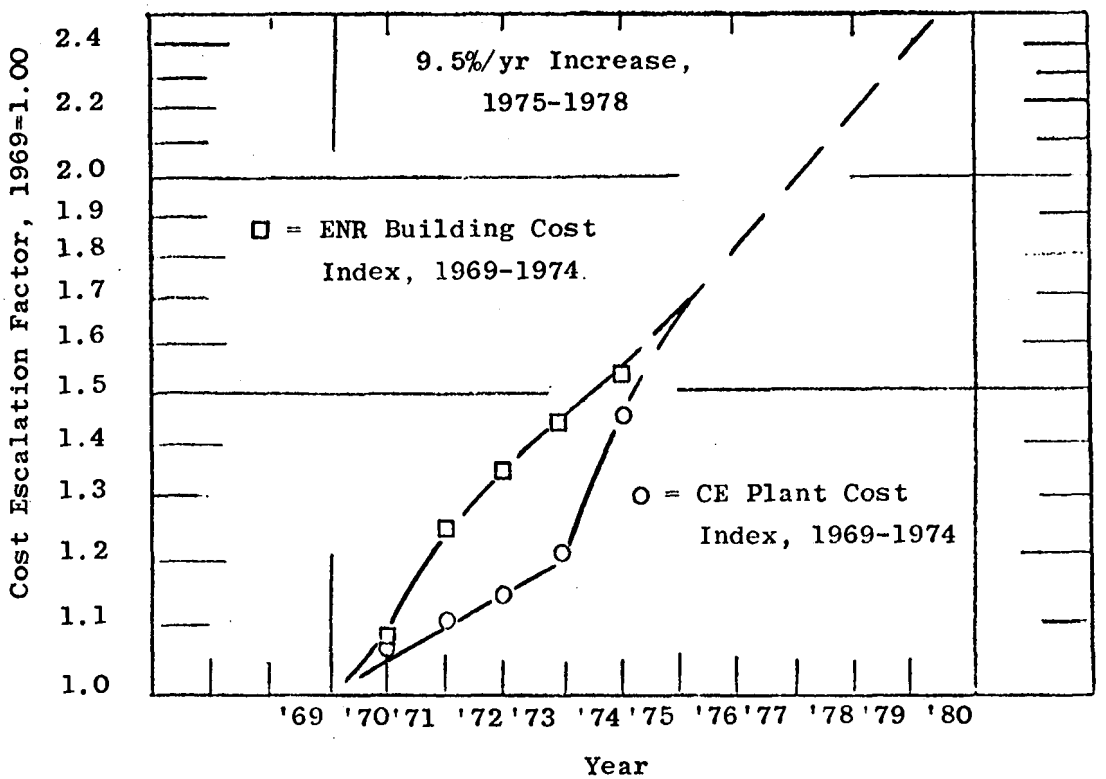

Figure 35. Cost Escalation Factors for Construction

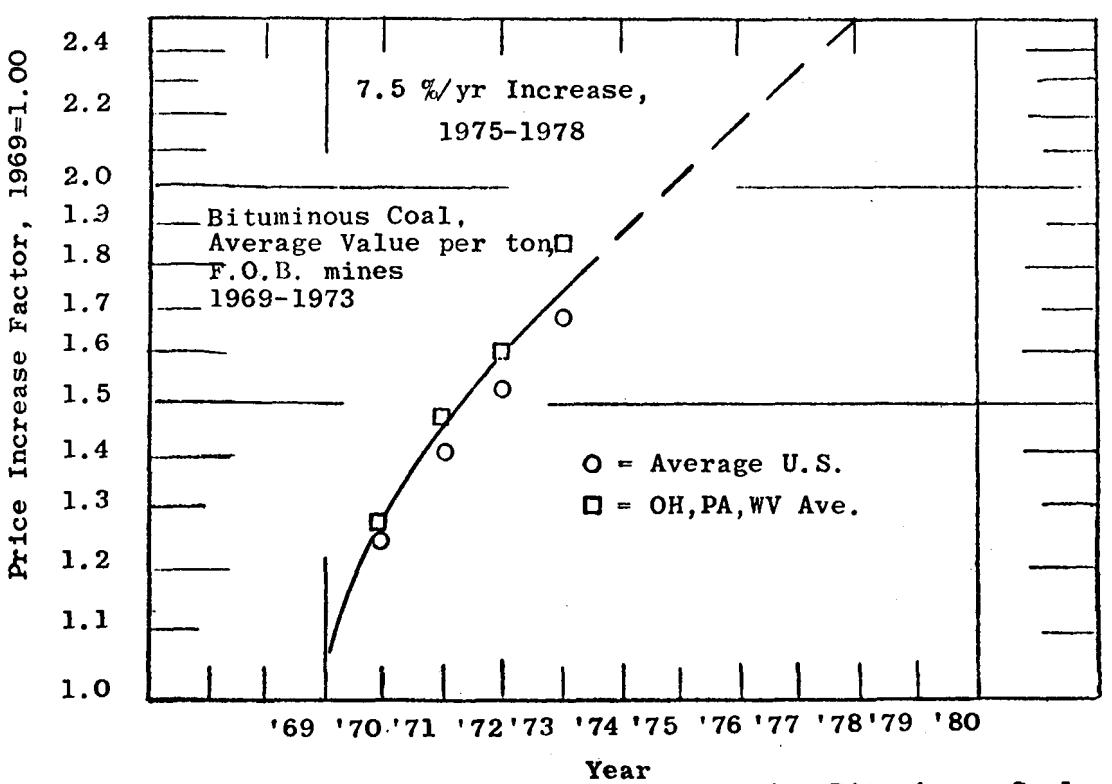

Figure 36. Price Increase Factors for Bituminous Coal

7.0 CONTINUOUS SIMULATION MODELING PROGRAM

7.1 INTRODUCTION

The purpose of this investigation was to examine the chemistry of coal desulfurization in relation to the proposed process with emphasis placed on the leach, regeneration, and iron sulfates removal steps. There were two ways to approach this problem: (1) Each process area would be examined separately and conclusions would be drawn. These individual conclusions would then be brought together and modified if necessary to account for their interactive effect on the entire process. (2) Each area of interest would be investigated separately but in such a way that the impact of any changes on the rest of the process would be reflected. This latter approach was selected as the better way to study the process.

The link used to tie the process areas together was a mass balance simulation model. Further, in an effort to make the simulation more realistic, it was developd as a transient state mass balance instead of a steady state mass balance. The transient state model adds additional insight in several ways: (1) It shows how accurate steady state assumptions are and it shows the time required to reach steady state from start-up. (2) The effect of condition changes during operation can be examined and the time required to reach new steady state conditions determined. (3) The transient state simulation will better illustrate the effects of critical chemical parameters and stream components on the entire process. (4) The model can be modified to include and optimize capital and operating costs under any constraints that are imposed on the process.

The material balance model was developed using the Continuous Simulation Modeling Program (CSMP). CSMP is a high level IBM programming language that minimizes the amount of programming required by the user. For example, efficient subroutines are available for the performance of numerical integrations, determination of roots in implicit equations, generation of impulses, random numbers, debugging, etc.

This program was written to output all stream components, molar flow rates and the molar amounts. These molar quantities were then used as a base for calculations related to the coal desulfurization chemistry. A copy of the program is listed in the Appendix, Section 10.8.1. Because of storage limitations this program listing is not complete for handling all variations that were simulated.

7.2 BASIC PROCESS EXAMINATION

7.2.1 Simulation Model Assumptions

The building and use of a model to simulate the chemistry of a process provides one immediate advantage in that it shows areas where additional data are needed. This study was no exception. In the building of the model, assumptions had to be made as to where data were lacking. The use of the model indicates how sensitive the process is to variations in these assumptions. Generally, the areas where assumptions had to be made in the absence of data can be classified into one of two types: (1) Those assumptions that had to be made about the process in order to develop the material balance. (2) Assumptions made about the chemistry so that inferences could be extended to the process. Those that fit the first category will be discussed in this section while those relating to process chemistry will be discussed in sections wherein they pertain.

Solution density and specific heats have to be assumed in order to calculate volumetric flow rates, volumes, and the rate of iron sulfates removal from the evaporator-filter system. Also a better knowledge of the solution density variation as a function of component concentration should be obtained because it may have a significant effect on the residence times and, therefore, on the product coal quality.

7.2.2 CSMP Output

One of the features of CSMP is its ability to print any calculated quantities in table and/or plot form with a

minimal amount of user programming (no format required). Figures 37a, 37b, and 38 show some typical output for the iron sulfate stream flow rates and amounts as a function of process operating time. The quantities shown in these figures are simulated results based upon the proposed coal desulfurization plant design. The initial conditions and flow rates are based upon the steady state quantities used in the process design.

The cyclic shapes of the curves in Figures 37a, 37b, and 38 are caused by residence times in the different vessels. The small irregularities are caused by vessels having small residence times, while the large cyclic variations are caused by the ten hour residence time for the reactors. Note that these cyclic effects have begun to dampen as the time of process operation increases, indicating that the process is approaching steady state. Outputs for all streams were examined to see if there were any excessive buildups or depletions. No obvious problems of this nature were observed.

7.2.3 Location of Iron Sulfates Removal Operation

The location selected for the removal of excess iron sulfates is quite important, as it will have a significant effect on the efficiency of the oxygen usage and the efficiency of the energy used in evaporation. Oxygen is added to regenerate ferric ions so that the leach process can proceed at a favorable rate. When ferric ions are removed from the process, the oxygen use efficiency decreases because the removal of one mole of ferric ions from the process means 0.25 mole of oxygen is wasted. Consequently the optimal iron sulfate removal location would

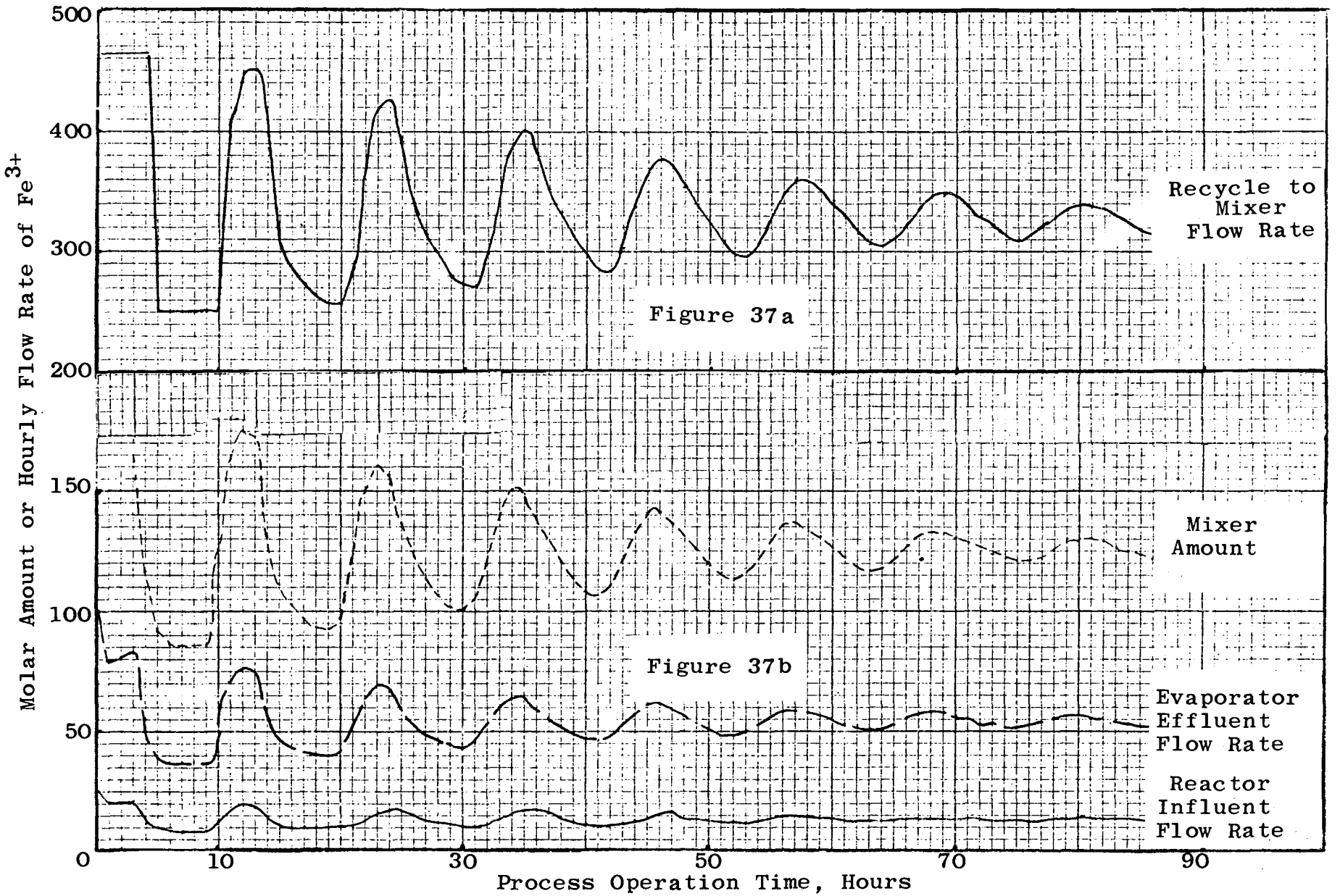

Figure 37. Representative Output from CSMP

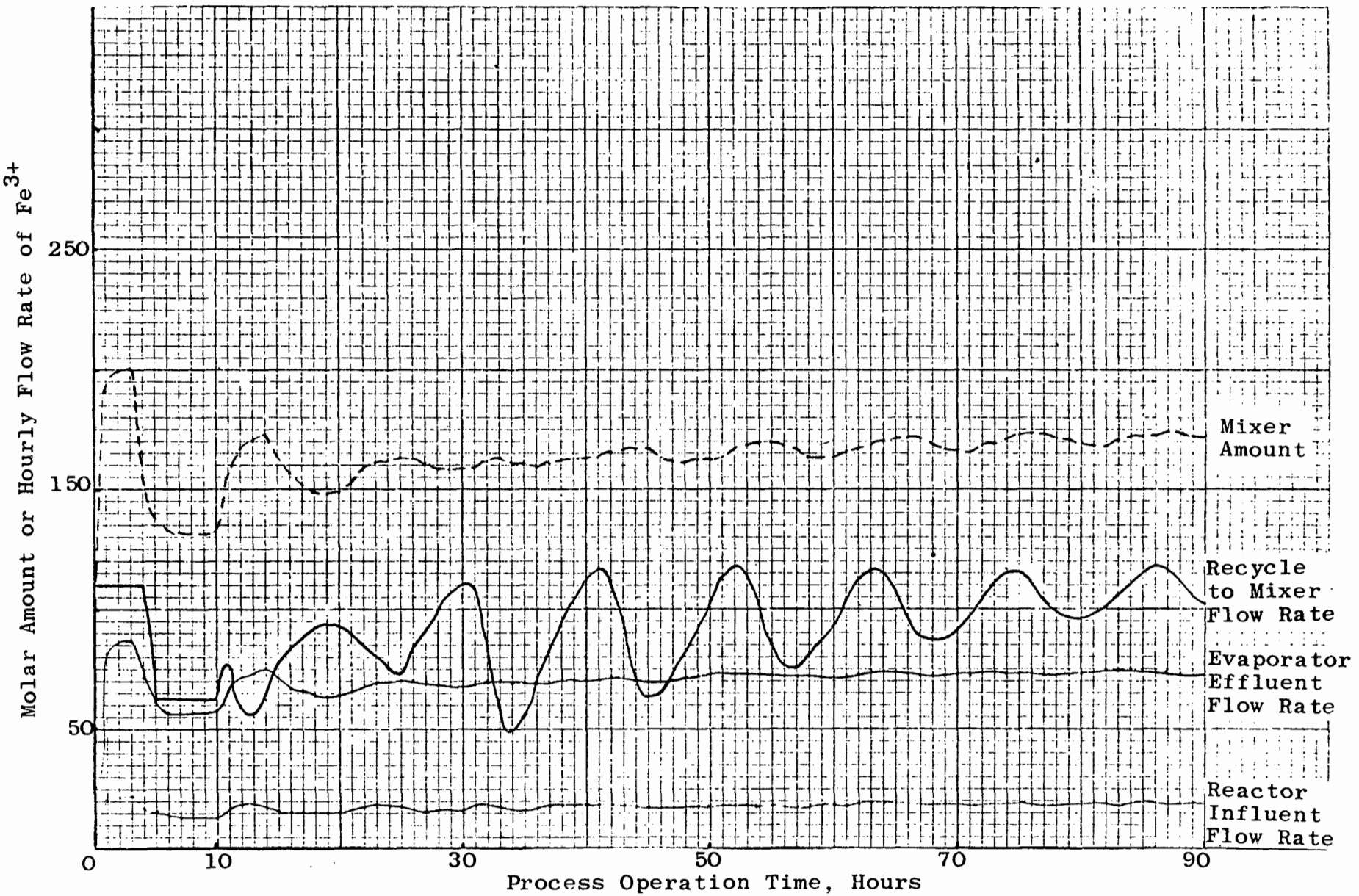

Figure 38. Other Representative Output from CSMP

be one where conditions were most favorable for ferrous sulfate precipitation (to minimize evaporation costs) and least favorable for ferric hydroxide and ferric sulfate precipitation. There are two general areas in the process where the excess iron sulfates can be removed: (1) somewhere in the recycle stream from the reactors to the mixer (2) in the mixer effluent. On the proposed flowsheet the chemical compositions at these locations are best described as that of stream #9 and #19 respectively. The process design calls for removal of coal by filtration of stream #16 followed by evaporation of the filtrate, stream #19, with subsequent cooling and removal of iron sulfate crystals by filtration. There is good reason for choosing this location. Figure 39 shows the product $Kw^3\ [Fe^{3+}][H^+]^{-3}$ as a function of process operation time (See Appendix Section 10.8.2 for a discussion of iron precipitates and the conditions of their formation as well as the definition of Kw). This product gives a relative indication of the degree of stream, or vessel, liquid saturation as a function of process operation time. Stream #9 has a much higher solubility product than stream #19. Figure 40 is a Posnjak and Merwin[21] ternary diagram that has the 90 hour region of process operation marked as an overlay. Note that the conditions in stream #9 place it in a region where precipitate is formed, whereas stream #19 is in a region where no ferric sulfate forms. It is clear from these figures that considerably more Fe^{3+} would be removed if the evaporation-filtration operation were located after the reactors. By waiting until this ferric ion rich solution is recycled through the mixer, several things are accomplished. Ferric ions are depleted in the mixer during preliminary leaching. The mixer effluent is now more rich in ferrous ion and somewhat depleted in ferric ion, which means a minimal loss of ferric ions with a maximum amount of ferrous ion removed per unit of energy (Figure 41) for evaporation.

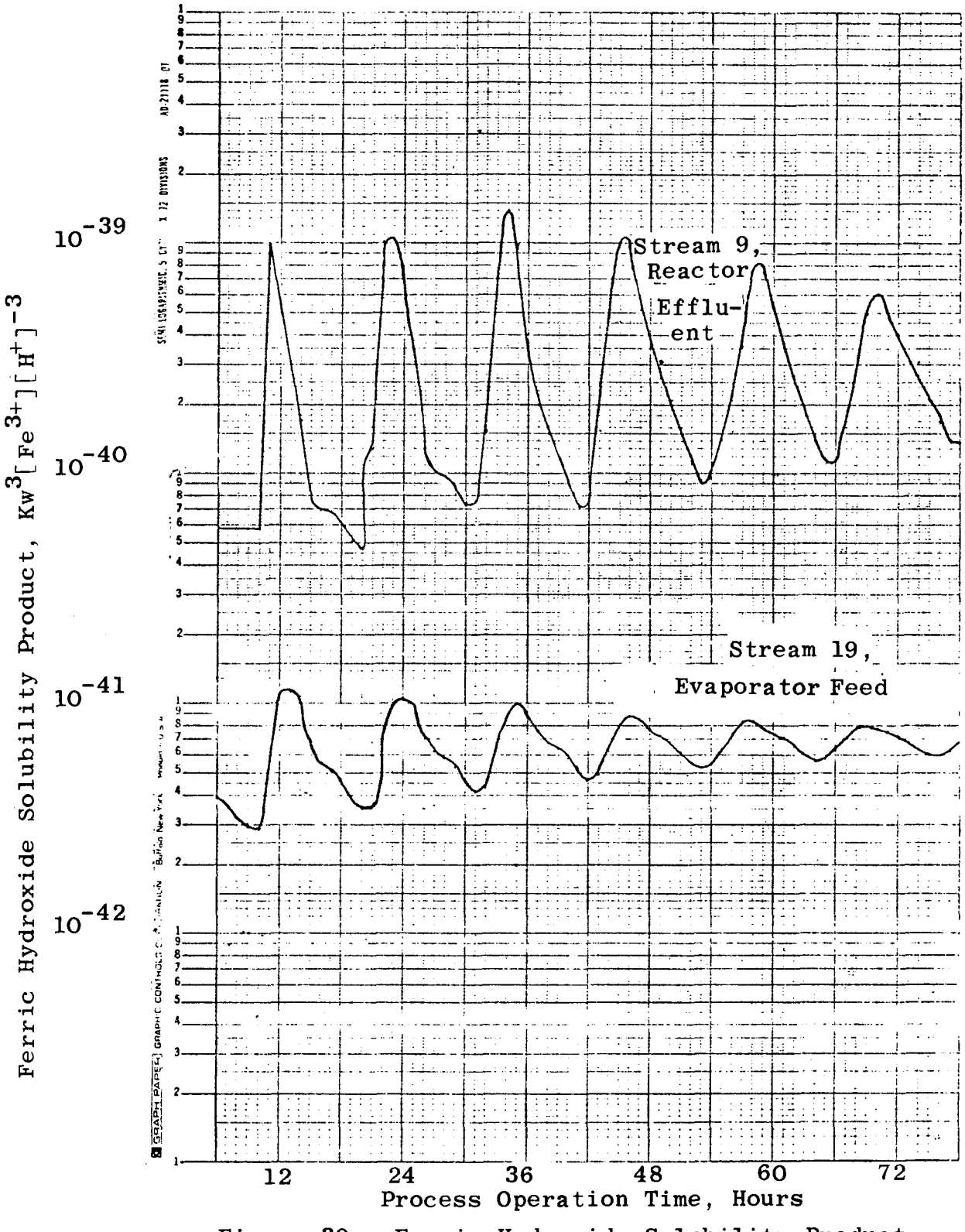

Figure 39. Ferric Hydroxide Solubility Product Variation with Process Operation Time

Figure 40. Regions of Process Operation Superimposed on Posnjak and Merwin Ternary Diagram for Fe_2O_3-SO_3-H_2O System

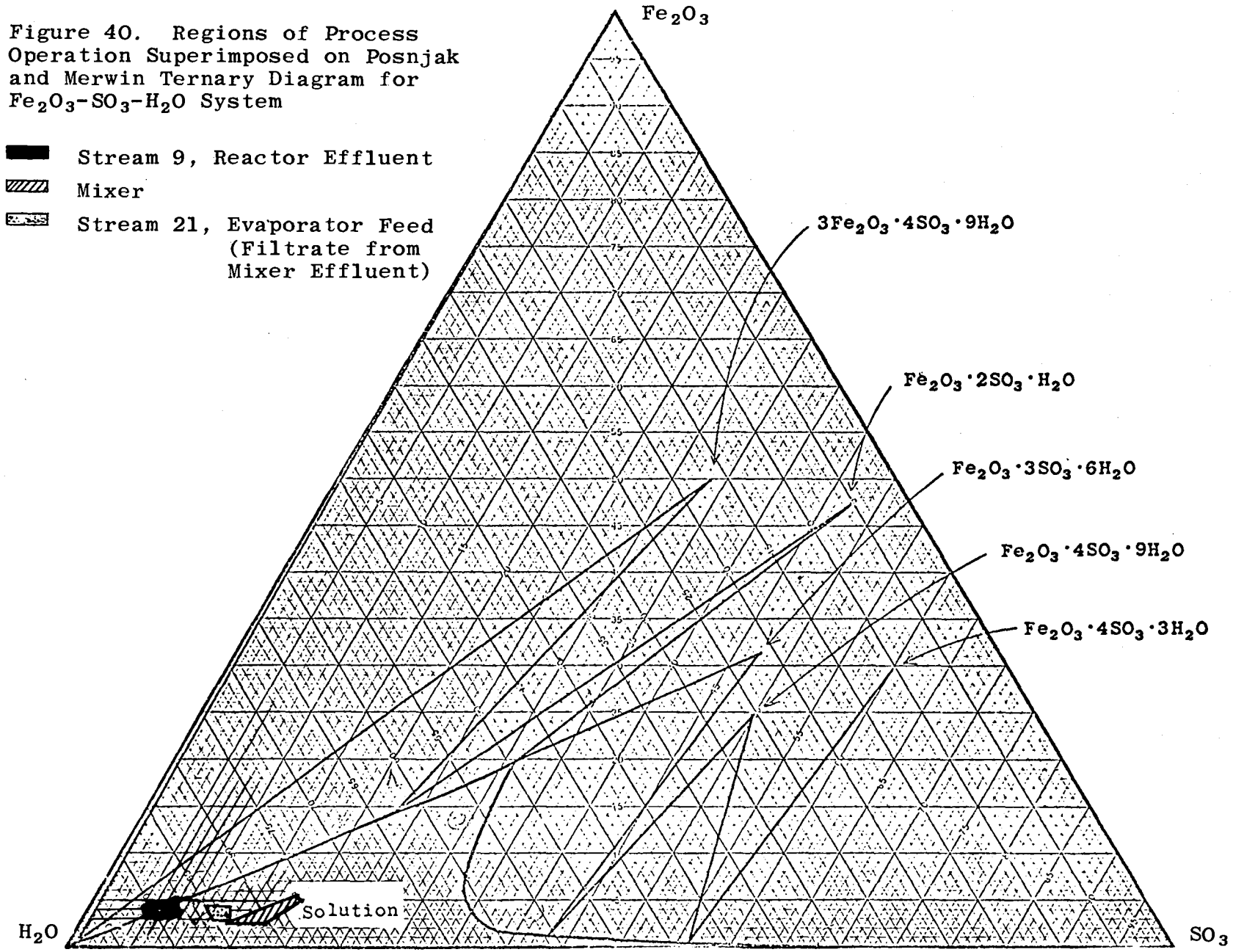

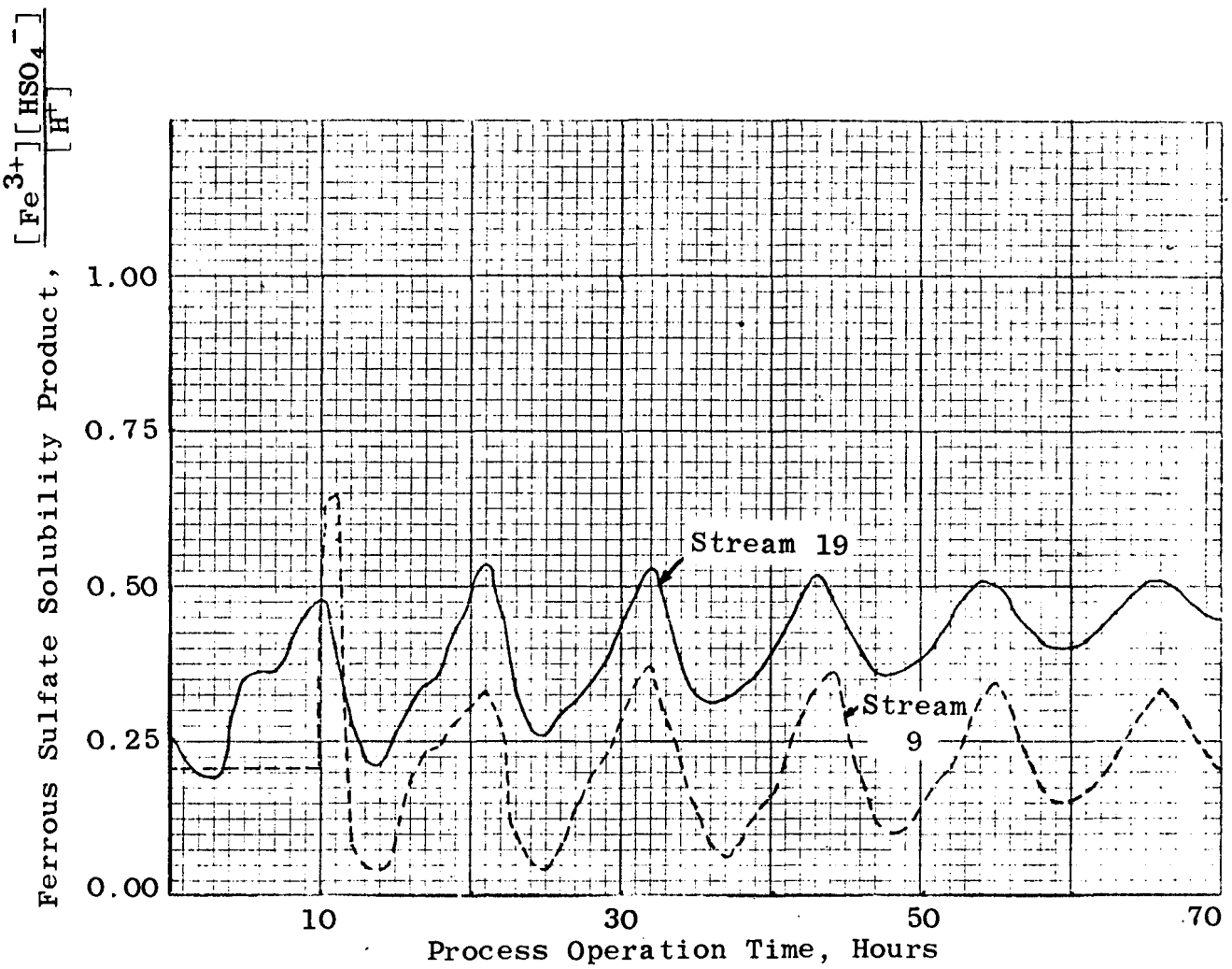

Figure 41. Ferrous Sulfate Solubility Product Variation with Process Operation Time

This situation may even be further improved by placing a surge tank between the mixer and the point where stream #16 is taken from stream #5. The capital cost of such a tank would have to be balanced against the savings of increased oxygen usage efficiency.

7.2.4 Leach Solution Loss in Clean Coal

Figures 39 and 40 that were alluded to in the previous discussion bring a potential operating problem to surface. The ternary diagram shows a ferric sulfate precipitate to be forming in stream #9. Also, the chance of ferric hydroxide forming in stream #9 is very high. The 25°C K_{sp} of ferric hydroxide ranges from 10^{-37} to 10^{-38}[22]. Bringing into account the high temperature and the high ionic strength of the process, the K_{sp} is probably 10^{-39} to 10^{-40} (see Section 10.8.2). This situation may be unfavorable for several reasons: (1) The ferric precipitate may be removed with the coal at the F-400, F-600, and F-800 filters. A water wash of the filter cake may solubilize the iron sulfate precipitate, but it will probably mean that it is converted to ferric hydroxide. Possibly this hydroxide conversion may be prevented if the initial wash is a cold water wash, but data are not available to predict this accurately. (Section 10.8.2 discusses areas where solubility data are still required.) (2) The pyrite leaching rate may be affected. Ferric ions present as ferric hydroxide will not leach pyrite as rapidly as ferric ions in solution. Possible remedies to this problem are: (a) Run the entire system in a more acidic environment from start-up. (b) Provide pH controlled make-up acid to the reactor effluent.

7.2.5 Stoichiometric Variations

The leaching of pyrite by acidic iron sulfate solutions is not a new area of study. This chemistry has been studied extensively, as it is the principal cause of acid mine drainage in coal and copper mining areas. However, in mine drainage studies the goal was to determine the rate mechanism in order to inhibit the leaching rather than to enhance it. Garrels and Thompson[23] studied both the leach and regeneration reaction chemistry and rates. Their findings are not in complete agreement with those of TRW. The TRW stoichiometry for the leach and regeneration steps are:

LEACH:

$$9.2Fe^{3+}+FeS_2+4.8H_2O \rightleftharpoons 10.2Fe^{2+}+9.6H^{+}+0.8S+1.2SO_4^{2-} \quad (3)$$

REGENERATION:

$$Fe^{2+}+H^{+}+1/4O_2 \rightleftharpoons Fe^{3+}+1/2H_2O \quad (4)$$

The reported findings of Garrels and Thompson are in agreement on the regeneration step stoichiometry but not in agreement with regard to the leaching step. Their proposed stoichiometry is:

$$14Fe^{3+}+FeS_2+8H_2O \rightleftharpoons 15Fe^{2+}+2SO_4^{2-}+16H^{+} \quad (10)$$

The questions of interest are: If the Garrels and Thompson stoichiometry is correct, what process alterations could be considered, and what type of products would be obtained if the proposed process remains as designed?

Obviously, the absence of any intermediate sulfur product would mean reduced capital and operating costs in the design. If it can be demonstrated that a sulfur reaction product does

not form or that operating conditions exist such that sulfur will not form, then the sulfur solvent extraction operation can be eliminated from the process. Some initial calculations were done to see if the Garrels and Thompson findings are feasible. Section 10.8.3 shows how E_h-pH relations can be derived to study the findings of Garrels and Thompson using thermodynamics. Figure 42 is an E_h-pH plot that shows regions of stability for sulfur species. In order to use this plot in conjunction with the CSMP simulation of the process, the factors that determine the stream or vessel E_h must be determined. The H_2O-O_2 system could be used to calculate the E_h at the bottom of the reactors because the high oxygen partial pressure would make that system the one that controls the E_h[30].

$$E_h = 1.23 + 0.0148 \log P_{O_2} - 0.059pH \qquad (11)$$

However, as the oxygen supply is depleted during the regeneration of ferric ions, the ferric-ferrous system will become the E_h controlling system(30).

$$E_h = 0.771 + 0.059 \log \frac{[Fe^{3+}]}{[Fe^{2+}]} \qquad (12)$$

Consequently, equation (12) was used to calculate the Eh since it provides the lower E_h limit.

The ferrous and ferric quantities are known from the molar flow rates and molar amounts in the CSMP calculations, so the solution E_h for different vessels and streams in the desulfurization process can be calculated and printed as part of the CSMP output. The overlay segments outlined on Figure 42 show the operating regions for several parts of the process. The E_h of the mixer is the lowest of the

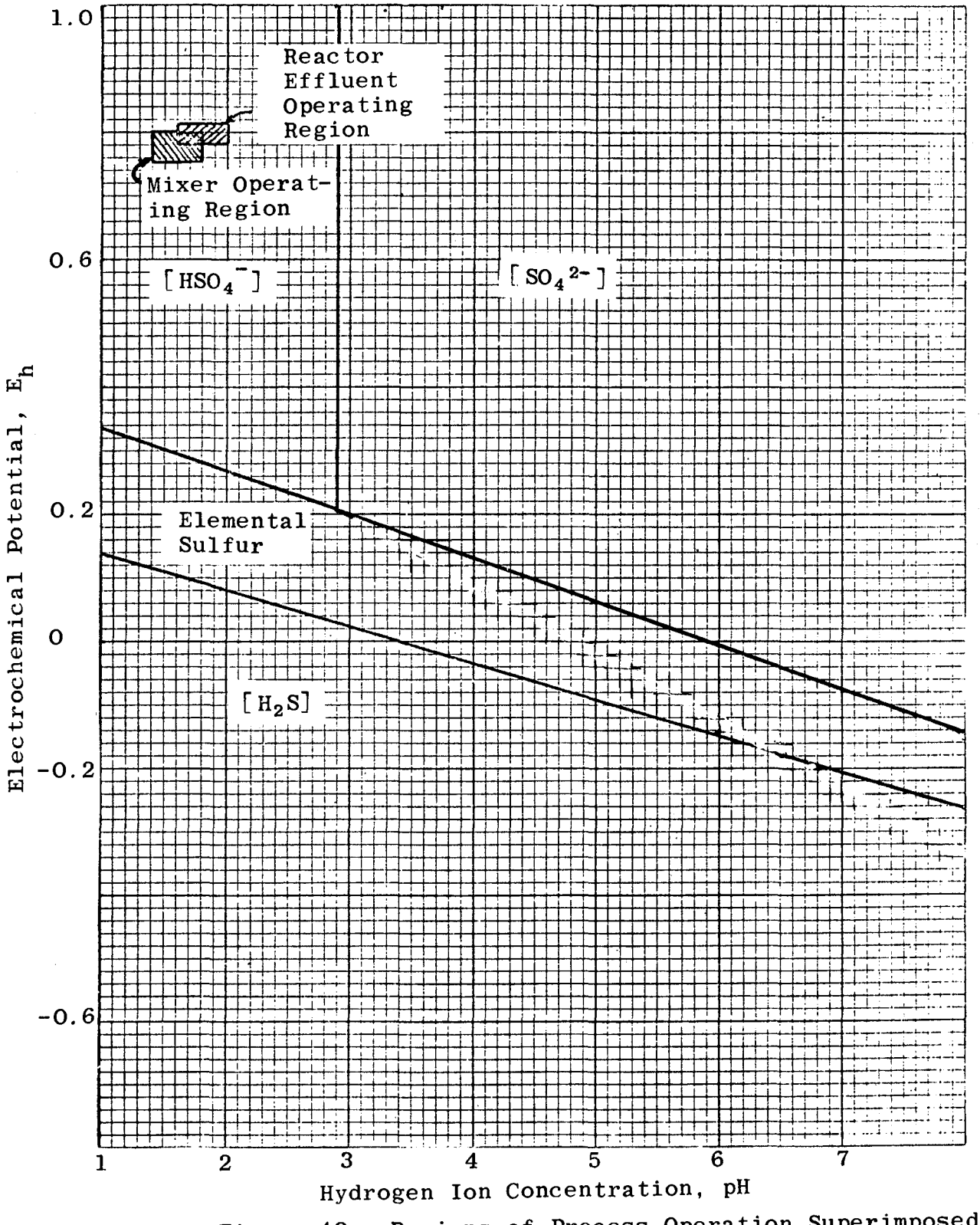

Figure 42. Regions of Process Operation Superimposed on an E_h-pH Diagram for the Sulfur-Water System

process, since this is the part of the process where the ferric ion quantity in solution has been depleted the most. Even under these conditions the sulfate or bisulfate forms of sulfur are most stable. This information does not completely rule out the possibility of sulfur formation. There are other ways that two studies could arrive at different results:

(1) While thermodynamic relationships show sulfur to be unstable, the kinetics may be slow enough such that sulfur is formed as an intermediate. There definitely is a need for a more detailed rate study to determine the steps in the mechanism.

(2) The studies of TRW showed sulfur as a product in the batch tests. Garrels and Thompson also observed sulfur when the ferric ion concentration was depleted. In all cases of continuous operating experiments TRW reported a calculated sulfur amount based on the results of the batch tests. Perhaps the reaction does not go far enough to completion when the batch leach is near equilibrium and the ferric ion concentration is essentially depleted.

(3) It was suggested that coal may be acting as a reducing agent at these elevated temperatures with the coal being oxidized and sulfate reduced.

$$2C + SO_4^{2-} \rightleftharpoons S^o + 2CO_2 + 2e^- \qquad (13)$$

The change in free energy for this reaction is -7.28 kilocalories. If this reaction occurs, it may be possible to remove the sulfur by adding a unit operation much like the cone precipitators used in copper cementation. Here the coal could

conceivably be sprayed with a solution having a high E_h. The sulfur would either be spalled from the coal surface and oxidized or it would be oxidized and then leached from the coal.

The other difference in stoichiometrics is in the amount of ferric iron required to leach the pyrite. A CSMP simulation was run using the proposed process and operating conditions with Garrels' and Thompson's stoichiometry. It was anticipated that the results would not be favorable, as 3.5 moles of O_2 are required to leach one mole of pyrite while 2.3 moles are required by TRW stoichiometry. Figure 43 shows the molar flow of pyrite from the reactors for both cases. As expected, the proposed process only removed 65-75% of the pyrite. To compensate for this loss due to stoichiometry, the amount of oxygen would have to be increased by 50%. As long as the regeneration rate is sufficiently faster than the leach rate the reactor size would not have to be increased. A CSMP simulation with 48 lb moles of oxygen per hour flowing to the reactors confirmed this assumption.

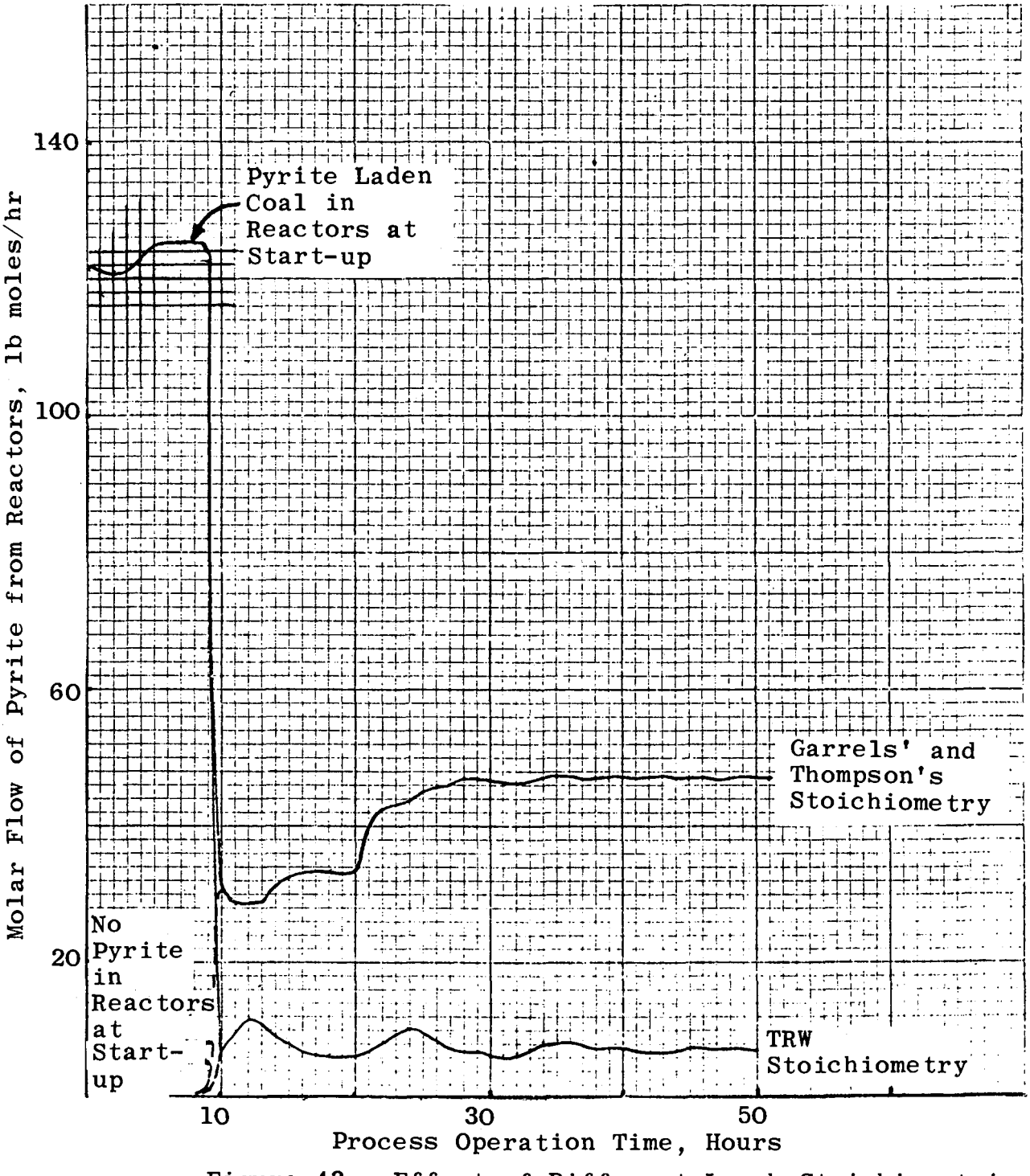

Figure 43. Effect of Different Leach Stoichiometrics on the Flow of Pyrite in Coal

7.3 PROCESS AND OPERATING CONDITION VARIATIONS

7.3.1 Ferric Ion Regeneration in the Mixer

One alternative suggested as a potential process improvement is regeneration of ferric ions in the mixer. Oxygen would be added to the mixer with no change in pressure over the mixer. A CSMP trial was made to see if an increase of the ferric to total iron ratio would increase the amount of pyrite leached in the mixers and subsequently reduce the amount fed to the reactors so that fewer or smaller reactors could be specified.

The simulation results indicate that this alternative is not favorable for this level of pyrite in the coal. The additional oxygen does increase the ferric to total iron ratio, but it does not increase it sufficiently so that the amount of pyrite remaining in the coal product is reduced. Figures 44a and 44b show the molar flow of pyrite from the mixer and reactors as the time from start-up increases. These simulated results indicate that ferric ion regeneration brings the mixer rapidly to steady state, but the overall improvement in the clean coal product with respect to pyritic sulfur is marginal. One reason that this modification appears to be disappointing is because the additional oxidation is depleting the system of acid. Figures 45a and 45b show the molar flow rate of acid in the stream that recycles to the mixer and the molar amount of acid in the mixer, respectively. What is actually happening here is that the acidity in the system is now in the form of ferric ion instead of free acid. Without any further process modification, undesirable iron precipitates will be formed, remain with the solids during filtration and

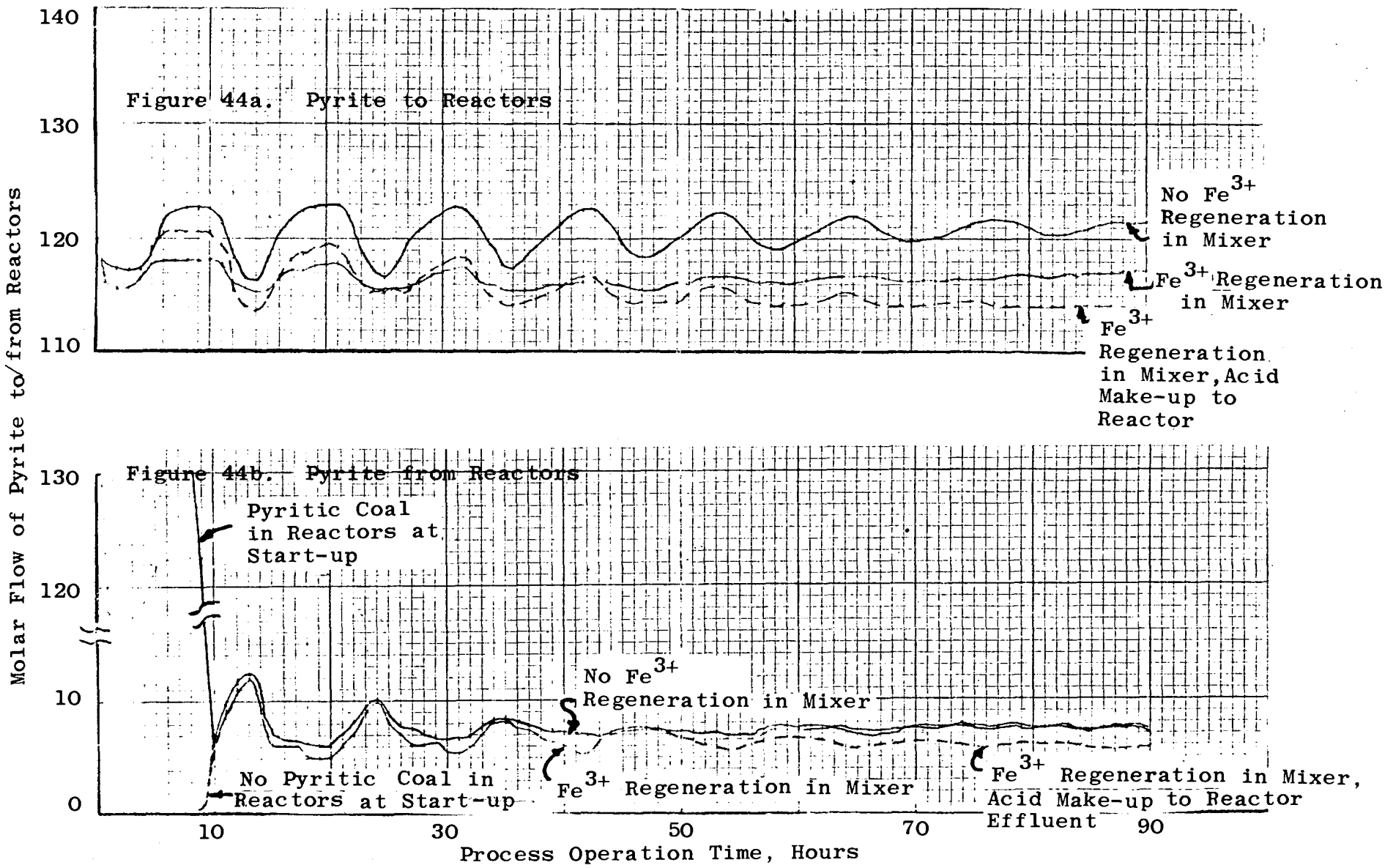

Figure 44. Effect of Ferric Ion Regeneration in the Mixer on the Rate of Pyrite Flow

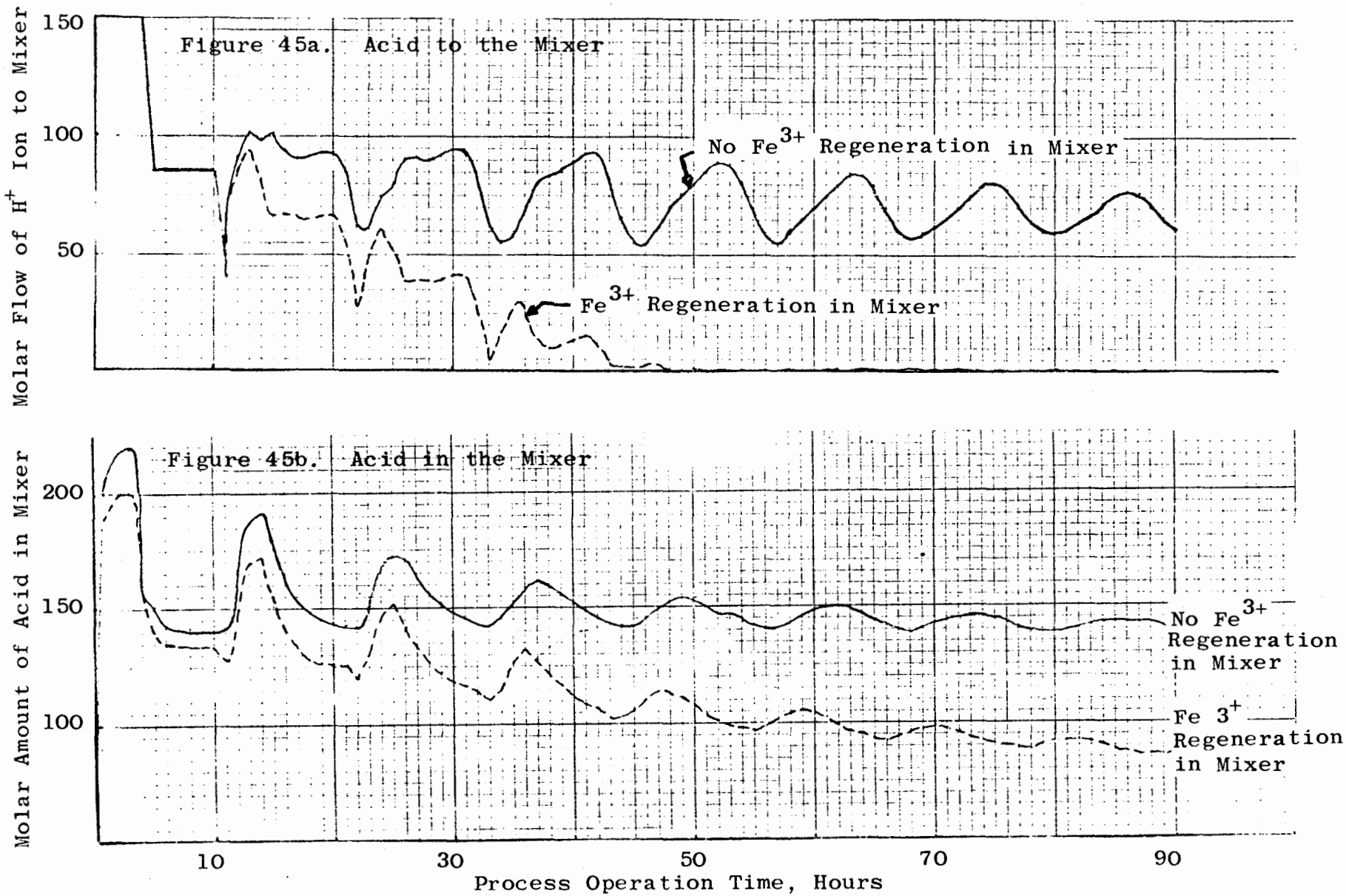

Figure 45. Effect of Ferric Ion Regeneration in the Mixer on Acid Requirements and Amount

Figure 46. Reactor Effluent Operating Region when Ferric Material Is Regenerated in the Mixer and Superimposed on Posnjak and Merwin Ternary Diagram

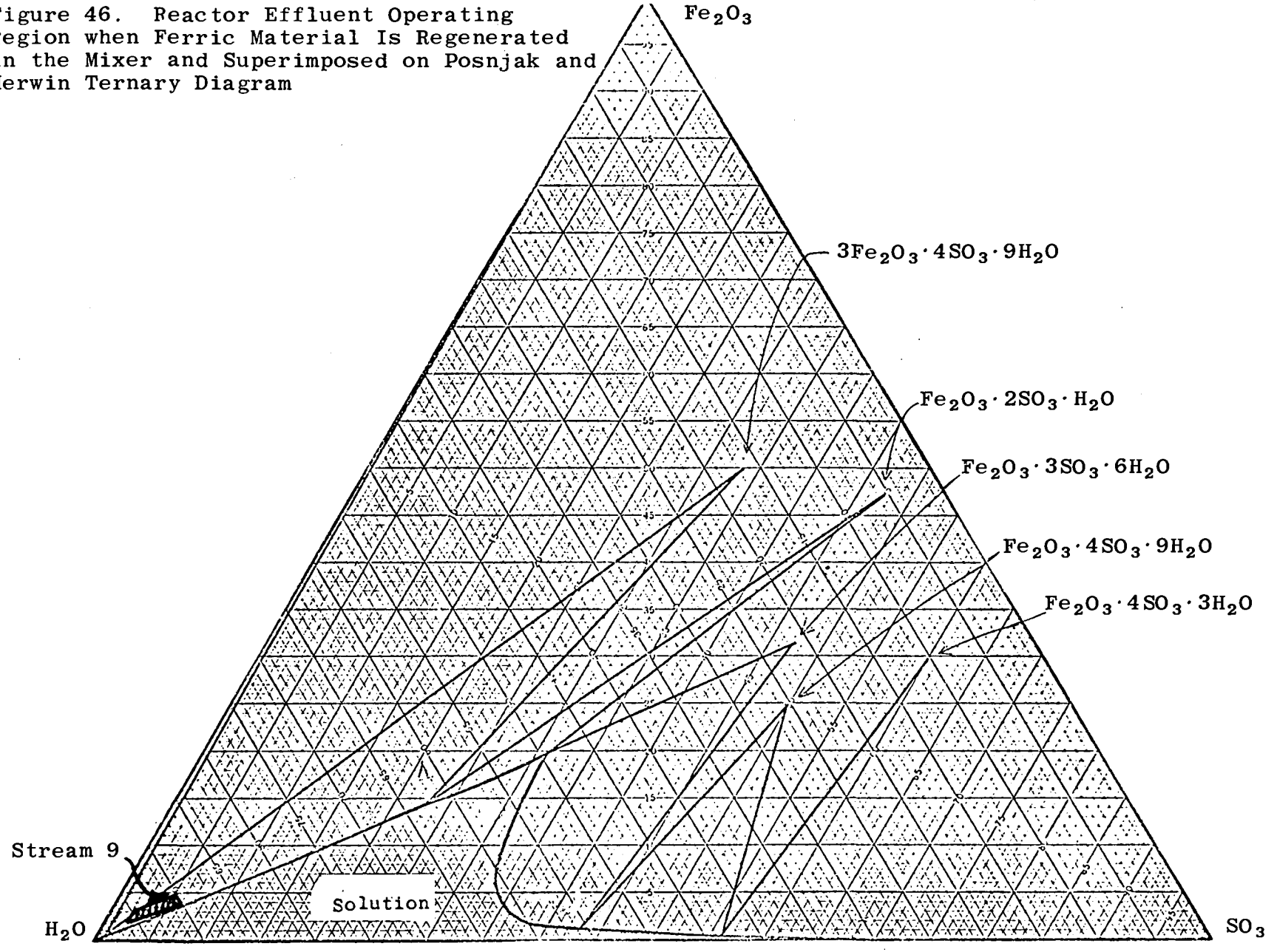

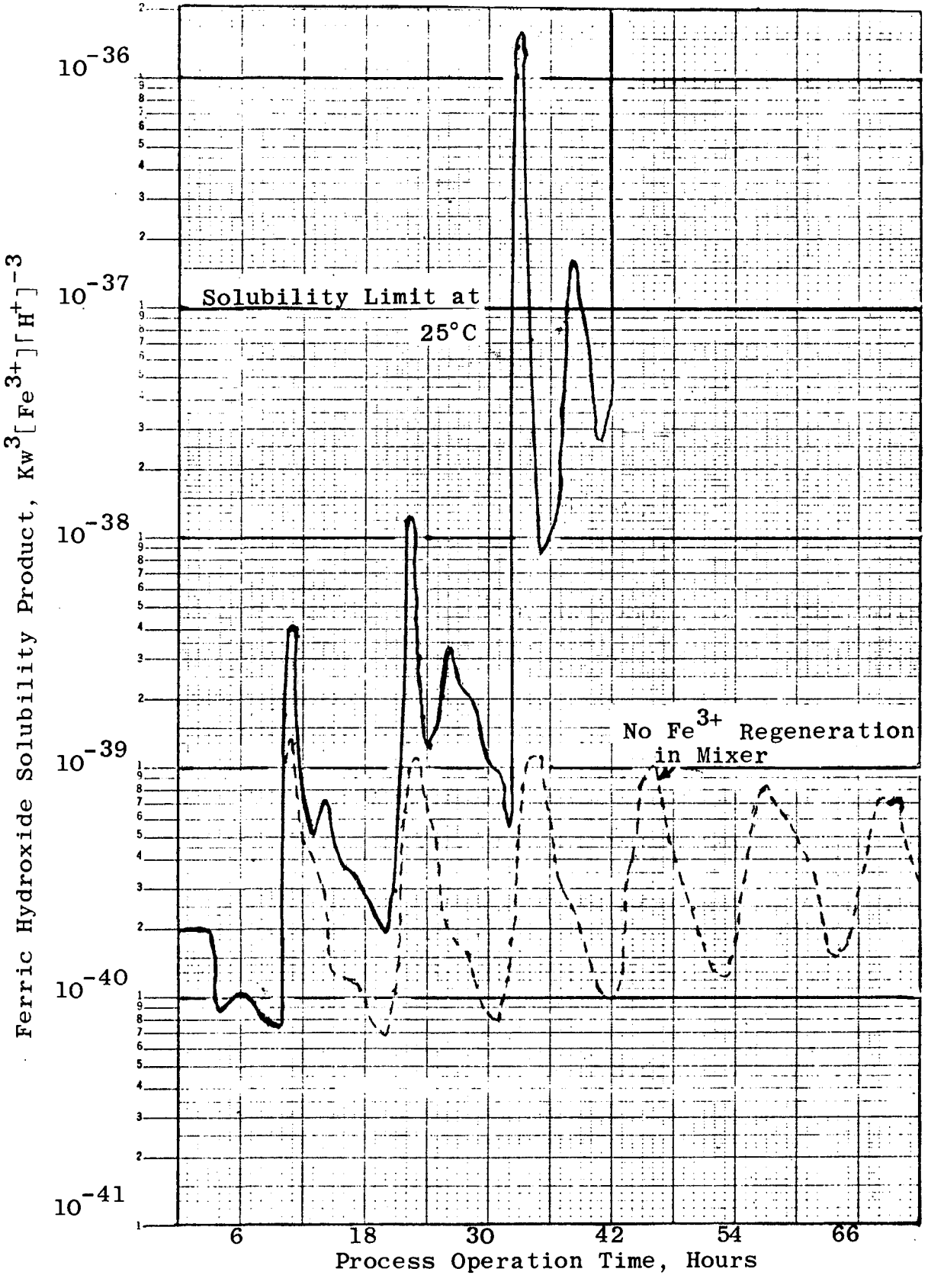

Figure 47. Ferric Hydroxide Solubility Product Variation with Process Operation Time when Ferric Material Is Regenerated in the Mixer

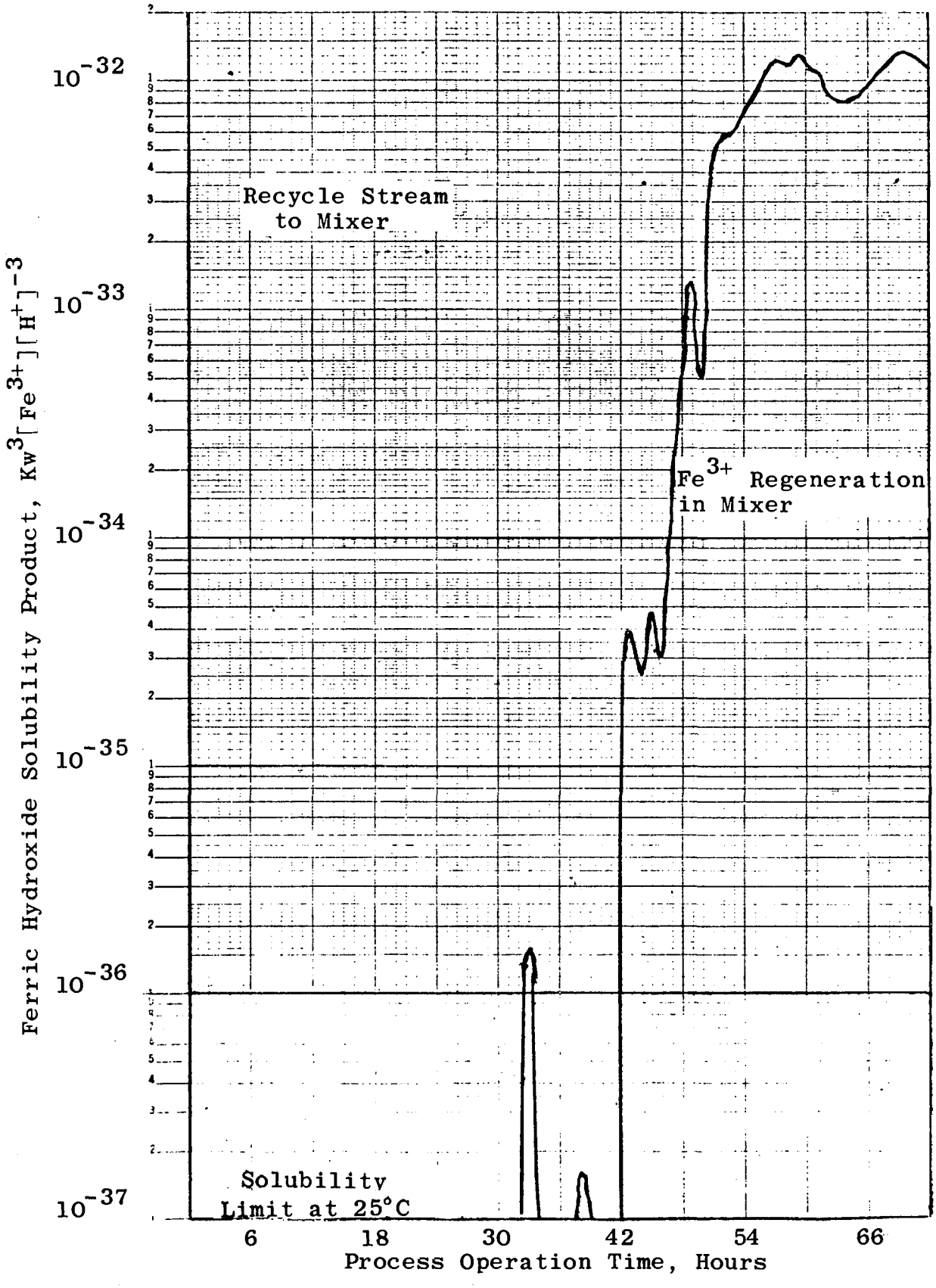

Figure 47 (Continued). Ferric Hydroxide Solubility Product Variation with Process Operation Time when Ferric Material Is Regenerated in the Mixer

be lost in the leached coal. This fact is illustrated by Figures 46 and 47, which show that a mixed ferric sulfate and ferric hydroxide product will form in the reactor effluent. In this process the relationship between ferric hydroxide formation and the oxidation reaction is quite sensitive because acid that prevents precipitation is being removed as fast as ferric ions that promote precipitation are being formed. The sensitivity of this relation is reduced by the effect of leaching, but the point is clear that excess use of oxygen means lower efficiency of oxygen/mole FeS_2 leached because of oxygen excess, system depletion of acid, and lower efficiency of oxygen/mole leached due to ferric ion losses. Also the excess ferric material that will be present in the reactor effluent will mean possible contamination of the product coal with ferric ion solids. This last problem could be reduced by installing the previously mentioned acid make-up line to the reactor effluent. The simulated effect of this addition is shown in Figures 44a and 44b. Without the improvements, 94-95% of the pyrite is removed. With the suggested improvements where make-up acid and 9-10 moles/hour of additional oxygen are required, the amount of pyrite removed averages 95.6%.

This disappointingly small improvement in the product is misleading because the percent pyrite removed is expressed as a mole percentage (100 x moles of pyrite in process effluent/moles of pyrite in process influent). If this reduction in the amount of pyrite were expressed as a percent reduction in residence time in a reactor, it would be more meaningful, as residence time can be tied to equipment size and capital cost. By taking a closer look at the leach rate equation, an approximate expression can be developed to make the point clear.

$$dW_r/dt = -K_L W_r^{\,2} Y^2 \qquad (9)$$

where K_L = reaction rate constant
W_r = pyrite/coal weight ratio
Y = ferric to total iron ratio

If Y is held constant (not true, but for the purpose of this illustration this assumption can be made) and the expression is integrated from f_o to f_t, then

$$t = \frac{1}{K_L Y^2}\left[\frac{1}{f_t} - \frac{1}{f_o}\right] \qquad (14)$$

where f_o = reactor influent weight ratio, pyrite/coal
f_t = reactor effluent weight ratio, pyrite/coal
t = time in reactor

If t is the time to reduce the pyrite content from 100% to 5% of the influent amount and t' is the time required to reduce the pyrite content from 100% to 4.4%, then the percent increase in residence time required is approximately 100((t'-t)/t).

This percent increase in residence time can be interpreted in another way: If the residence time in the reactor is held constant and the product is improved by increasing the pyrite removal from 95.0 to 95.6%, then 100((t'/t)-1) is the percentage of residence time saved by regenerating ferric iron in the mixer. Examples are given on the next page and in Section 10.8.4.

These estimates are conservative since Y was held constant. The value of Y will be higher when there is regeneration in the mixer. On a weight ratio basis the percentage of product improvement was 14-27% which is in good agreement with this approximate analysis.

	Ferric Iron Regeneration in the Mixer	No Regeneration in the Mixer	Percent Improvement Due to Regeneration in the Mixer
Case 1.[a]			
Percent pyrite removal	95.6	95.0	0.6
Reaction time improvement			14.73
Case 2.[a]			
Percent pyrite removal	95.6	94.5	1.1
Reaction time improvement			26.84

[a]Cases 1 and 2 show the improvement in reaction time when there is ferric ion regeneration in the Mixer with 95.6% pyrite removal for the whole process compared to no regeneration in the Mixer and overall pyrite removal of 95.0% for Case 1 and 94.5% for Case 2 (Calculations are given in Section 10.8.4).

7.3.2 Leaching Rate Constant Variation

One of the process parameters that the quality of the product coal is particularly sensitive to is the leaching rate constant. This parameter is generally thought of as constant at a particular temperature, but there are several ways in which it will vary.

In other independent studies of pyrite leaching from coal,[24] it has been shown that the leaching rate varies for different coals and that the rate is even different for stoichiometrically similar but structurally different pyrites in the same coal.

Another source of variations in K_L will occur because of feed coal mesh size variations. For instance, it may be found that a larger feed size must be used because the hydrophobicity of -100 mesh coal prevents it from forming a slurry in the mixer.

In heterogeneous rate studies the specific rate constant usually has a dimension $(\text{Area})^{-1}$. However, because of the obvious difficulties that would arise in estimating the surface area of pyrite, TRW expressed the leaching rate constant for -100 mesh coal. Therefore, the actual rate is constant.

$$K_L' = K_L/A \tag{15}$$

Where A = surface area of pyrite in the coal.

In order to obtain a rough estimate of the sensitivity of the process to a change of feed size from -100 mesh to -48 mesh a simulation was run. A particle size increase of about two would mean an area reduction of about four. A rate constant reduction of four is probably conservative as there will be fewer fines and therefore more pyrite occluded within the coal. Figure 48 shows the molar flow rate of pyrite from the reactors under different operating conditions. Curve #1 shows the results for the -48 mesh coal and, for the purpose of comparison, curve #2 shows the results for the -100 mesh coal. One can see that when processing -48 mesh coal additional process modifications will have to be made in order to obtain a product with a pyritic sulfur level similar to that obtained with -100 mesh coal.

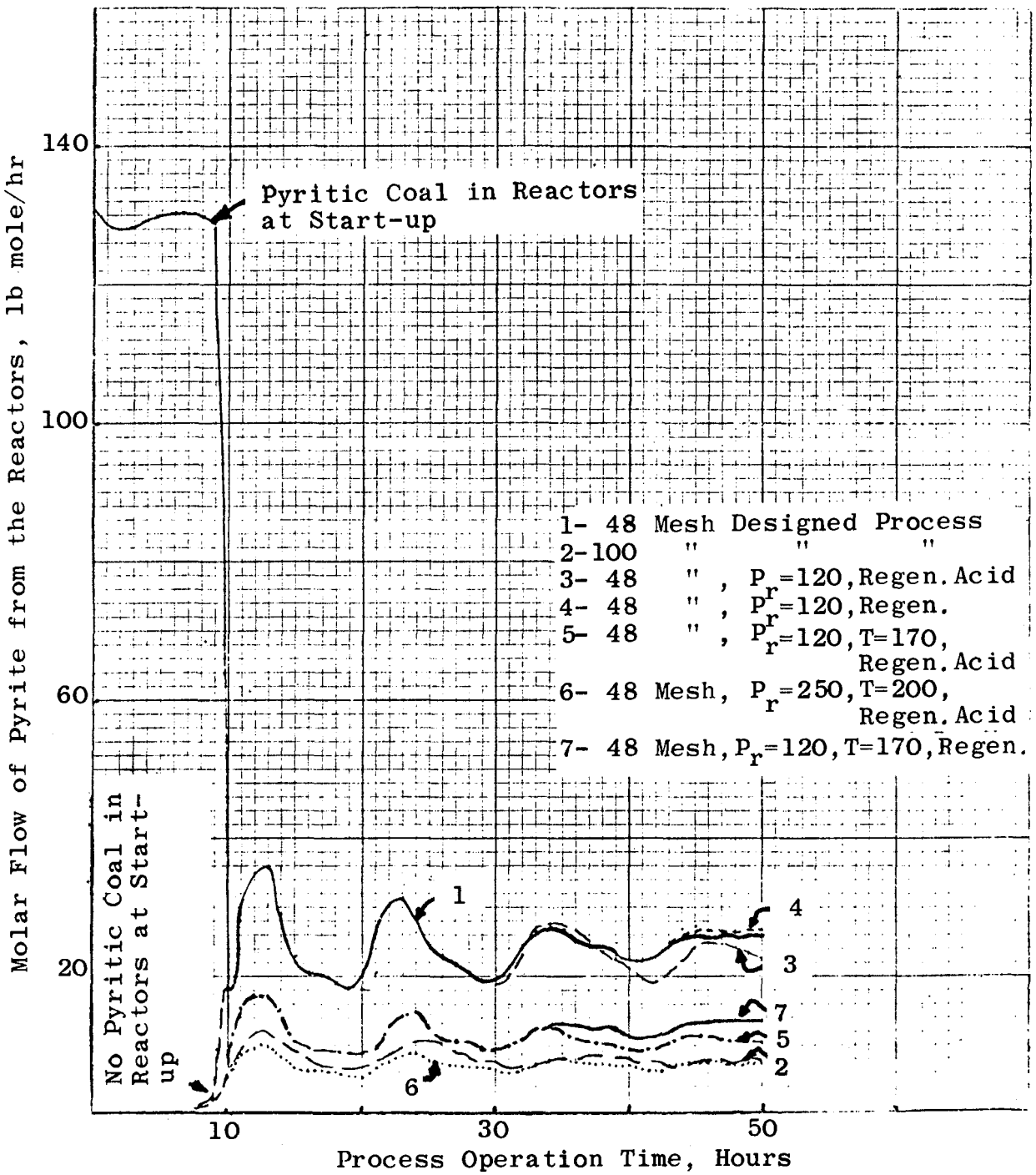

Figure 48. Pyrite Effluent Flow Rate Variation for Different Process Operating Conditions

Assuming that the rate limiting step in the reaction does not change with increased temperatures and pressures and that equipment modifications could be made, several simulations were made to see what type of conditions would be needed to obtain an acceptable product. Actions that were taken were intended to enhance the leaching rate. In the first run ferric ions were regenerated in the mixer and the pressure over the reactors was increased to 120 psia. This result is shown as curve #4. This action does not improve the results because the increased regeneration depletes the system of acid. An acid make-up stream flowing to the reactor effluent was included. This improved the product coal but not sufficiently (curve #3). Curves #5 and #7 show the same effects as seen in #4 and #3 with the average temperature in the reactors increased to 170°C. This action increases the value of the leach and regeneration rate constant, but the buoyancy pressure increases rapidly with temperature, reducing the partial pressure of oxygen. One final run (#6) was made where the temperature and pressure were increased to 200°C and 250 psia. Under these conditions, the product coal was acceptable. Yet, it must be remembered that the process was designed for 80 psia and 128-160°C operation. Further, because of the limited range of the temperature data, one does not know what step is rate determining and extrapolation is no more than hypothetical. Yet, even with these assumptions it is clear that sizable changes in design conditions and equipment may be necessary in order to compensate for any reductions in the leach rate caused by larger feed size, different pyrite level, etc.

7.3.3 General Discussion

Discussion in the previous sections was centered around

three general areas of chemistry and their effect on the process. In Section 7.2.3 the impact of solution concentration control on the operating efficiency and the quality of the product coal was discussed. In Section 7.3.1 the effect of increasing the amount of regeneration was touched upon, and in Section 7.3.2 the leaching rate and regeneration rate were covered. The knowledge obtained by looking at these areas will now be used as input for making minor changes, for selecting startup conditions, and for making operating changes when process variations occur. This discussion will by no means exhaust all the possible changes or conceivable condition variations, but it will show that the use of simulation can provide sufficient insight into the process so that reasonable action can be taken.

7.3.3.1 Variation of Pyrite Feed to the Process - The assay of pyrite in coal has been assumed to be fixed at 135-136 lb-moles per hour. It was of interest here to see how the process would handle variations in the feed and what changes might be made to accommodate these variations in the best manner possible. The pyrite assay was made to vary in two ways. In one simulation the amounts of pyrite in the feed were drawn randomly from a normal distribution having a mean value of 135.87 and a standard deviation of 25. This large standard deviation was selected in order to see how the process would be affected by large perturbations. Figures 49a and 49b show the influent and effluent pyrite flow rates. While the variations shown in Figure 49a occur every hour, in the actual simulation the variations occurred every ten minutes. The difference is simply

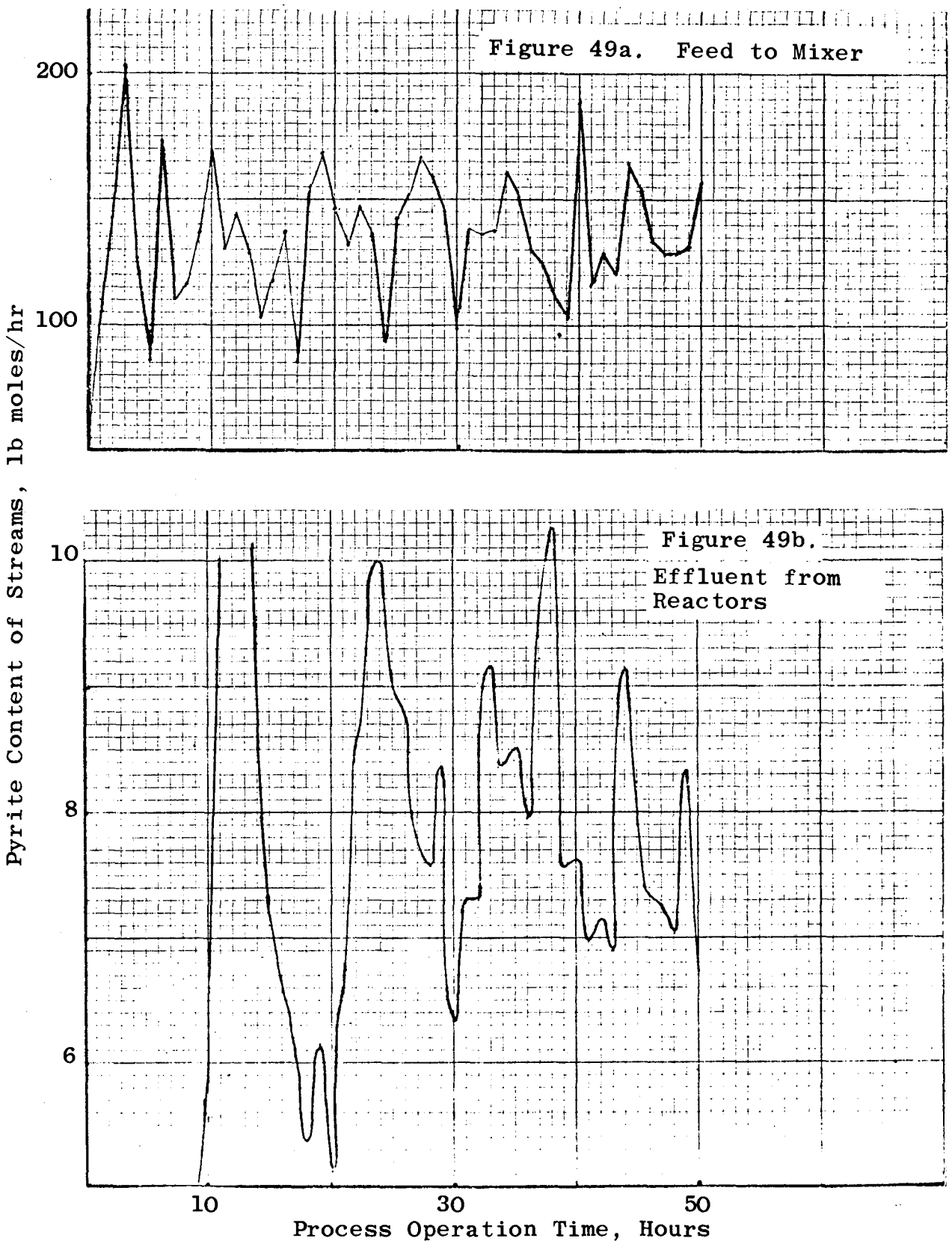

Figure 49. Variation in Flow of Pyrite as the Pyrite Feed to the Process Is Varied Randomly Using a Normal Distribution

because step size for integration was made on a ten minute basis and output printed only on an hourly basis. Figure 49b shows that even with the large fluctuations the process removes at least 92 percent of the pyrite. Recall from Figure 44a that ferric ion regeneration in the mixer worked to dampen the pyrite flow fluctuation. If large fluctuations are encountered, mixer ferric regeneration might be considered as a way for maintaining steady pyrite to the reactors.

Another approach to pyrite assay variation is to make step variatons that persist for a period of time. This method is very satisfactory for determining what accommodations are needed to meet with the change.

One such situation that is of interest is the determination of the plant modifications that could be made when the pyrite assay in the feed is lower. In the situation simulated the assay was reduced by 50 percent. Figure 50 shows the amount of improvement gained in the product for this reduction in the pyrite feed. This figure further exemplifies what is stated in Equation (9), Section 7.3.1. The amount of pyrite in the clean coal is quite insensitive to the influent amount when residence time, t, as well as K_L and Y are held constant. However, there is some improvement in the product beyond specification. Some changes will be considered that may reduce either operating or capital costs at the expense of bringing the pyrite effluent level up. No changes in process layout were considered, as they would preclude any easy economic extrapolations from the existing design.

Two simulations were made where there were five and seven reactors. The effluent reactor streams from these simulations are also shown in Figure 50. Another simulation was made where the mesh size was reduced to -48 mesh, and this is also shown in Figure 50. As should be expected, none of these simplifications produced an acceptable product because feed concentration is not as important in the kinetic model as is the residence time or the leaching rate constant. With further modifications such as increased reactor height, higher reactor temperature, higher reactor pressure, ferric ion regeneration, etc, these new configurations may be feasible, but they will not be considered here. The main point to be gained from this discussion is that no significant cost savings will be realized (other than reduced oxygen costs) by using a feed coal that has considerably lower amounts of pyrite. Then it follows that increases in the amount of pyrite present will mean only minor adjustments in order to meet product quality specifications. Simulation results confirm this premise. In a simulation the process was run for 20 hours at 135.87 moles of pyrite/hour. At 20 hours the pyrite feed rate was increased to 140 moles/ hour and then increased again to 145 moles/hour at 30 hours. The pyrite effluent flow rate is shown in Figure 51. Clearly some adjustment will have to be made to improve the product by a small amount. (This is not as much as Figure 51 indicates because the initial Fe^{3+} amount was only 100 moles. If the initial condition amount were higher, this pyrite level would be even lower. See next Section). Past discussion would suggest regeneration in the mixer as a logical adjustment choice.

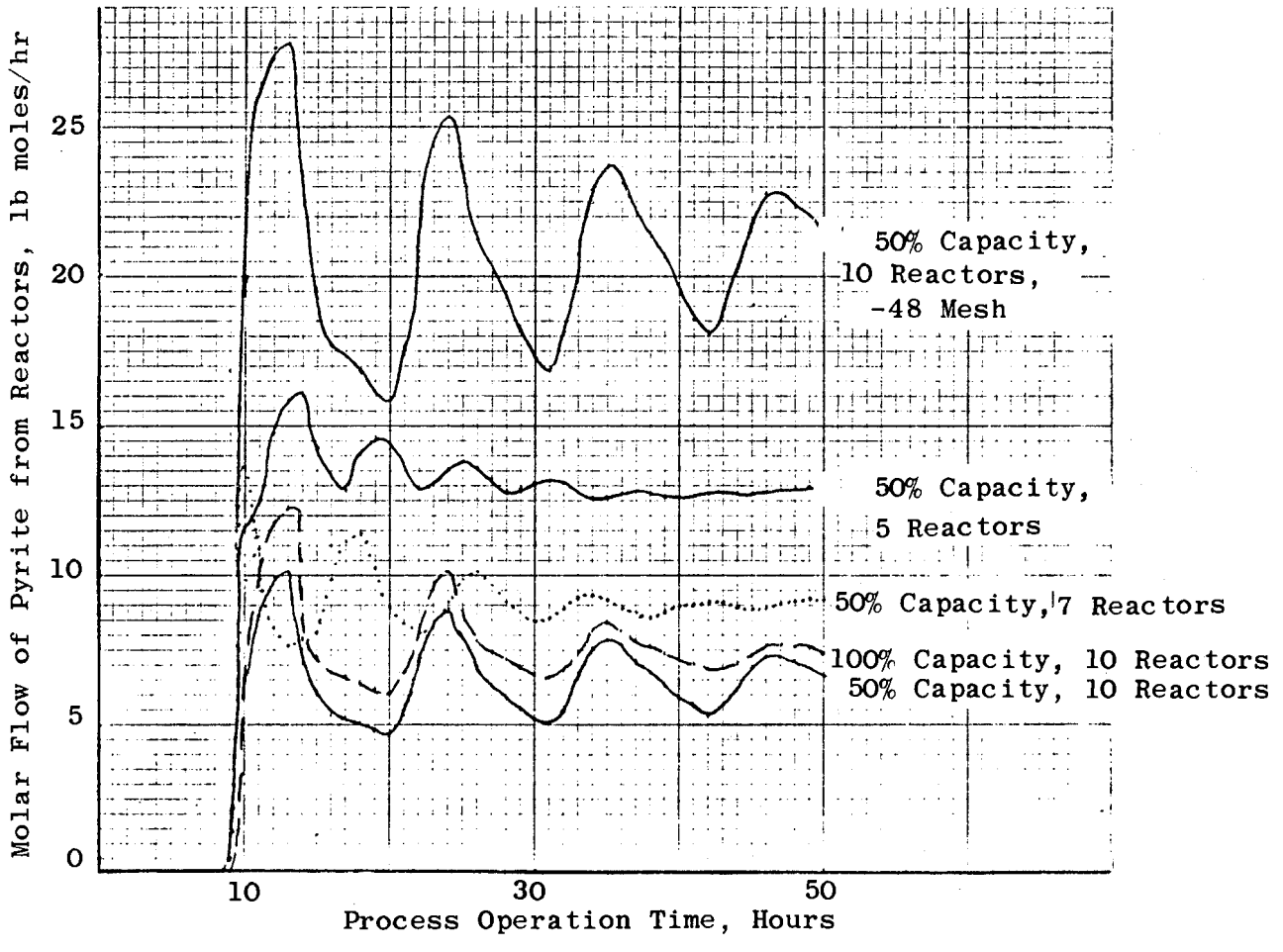

Figure 50. Effect of Changes in Operating Conditions on Flow of Pyrite from the Reactors

7.3.3.2 Modification of Start-up Conditions - In all simulations discussed the fractional amount of each component at startup was proportional to the amounts used in the design of the plant. It is of importance to know which components must be present at startup so that steady state with an acceptable pyrite level is rapidly attained. It is obvious that some components must be present in significant quantities. Acid must be present to keep ferric ions in solution and to perpetuate the regeneration of ferric ions. The total amount of iron in solution must be kept at a reasonable level so that there is enough available to do the leaching. Several variations were simulated to see how long it took for the system to converge. In one set of simulations the amount of ferric ion present in the mixer at startup was varied. The curves are shown in Figure 52. Another simulation was done where the liquid to solids ratio was increased considerably. These results are also shown in Figure 52. From these simulations it is clear that the amount of iron in the 3+ state present at startup should be at the plant design level or higher. Otherwise the product will not be acceptable until after the process has been running for a considerable length of time. A period of increased O_2 to the reactors would improve the initial product if the iron (III) were low. Note that a high liquid to solids ratio means a very poor product coal will be produced. Perhaps initial solids recirculation would be the best way to bring the mixer up to volume.

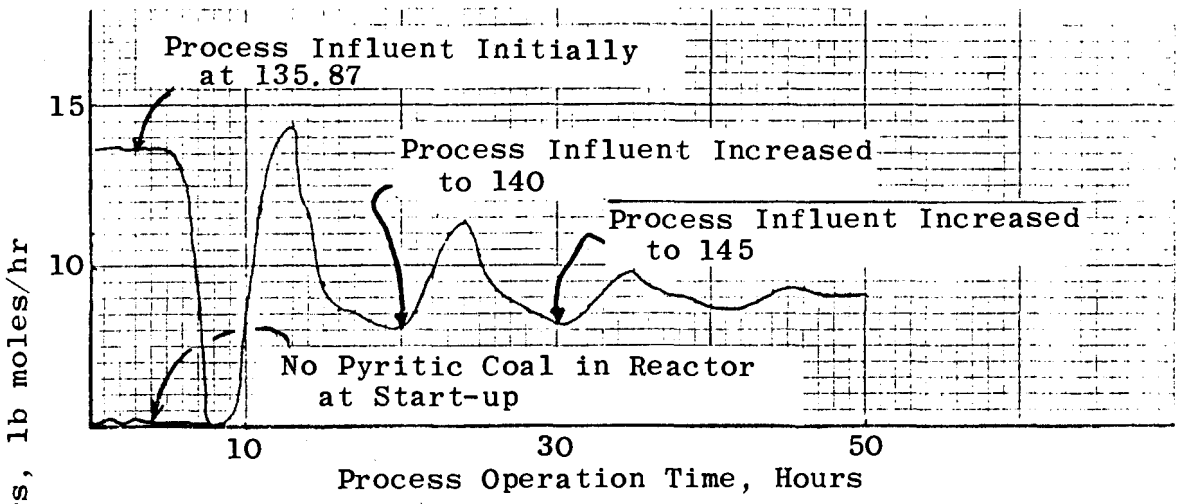

Figure 51. Effect of Step Changes in Pyrite Feed on the Flow of Pyrite from the Reactors

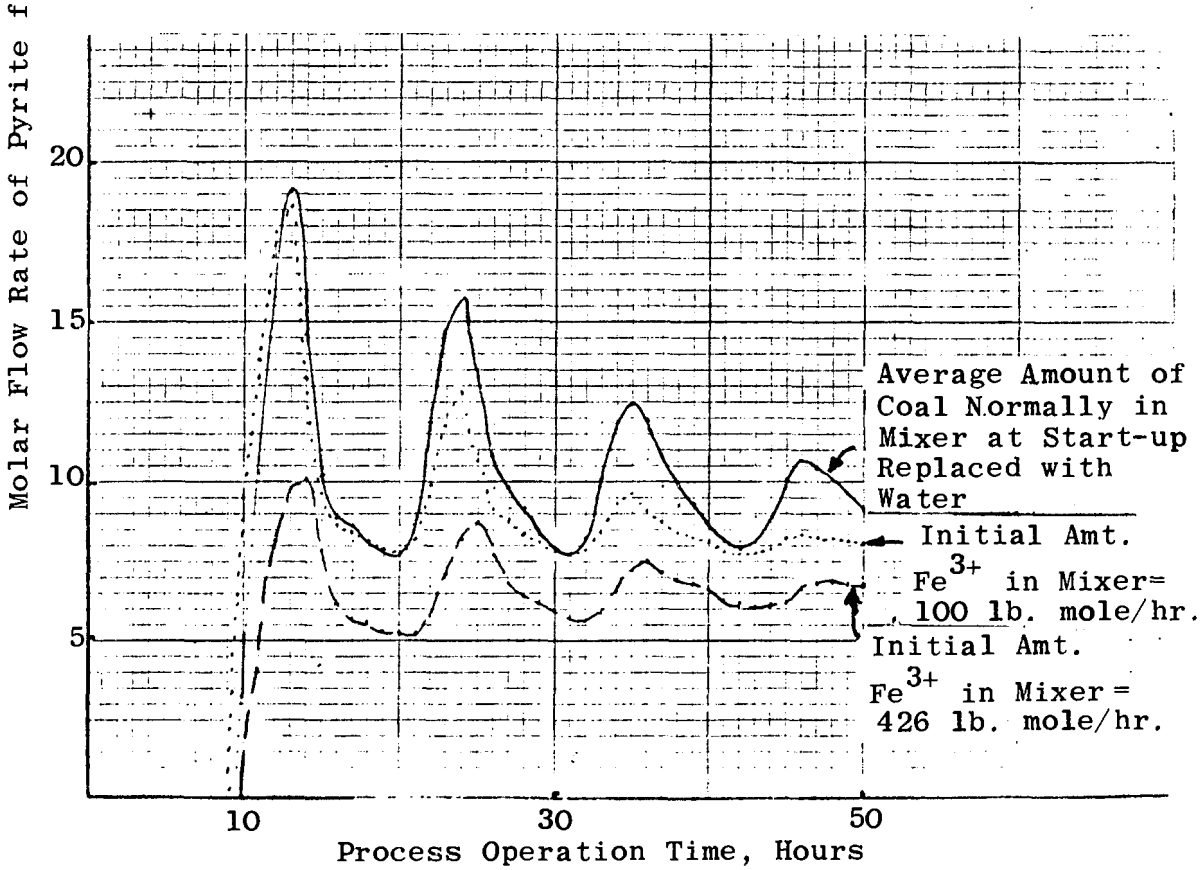

Figure 52. Effect of Changes in Start-up Conditions on the Flow of Pyrite from the Reactors

7.4 SUMMARY

This study satisfies two objectives: The coal desulfurization chemistry as it relates to the process has been studied and recommendations made concerning additional data needs and process modifications. Also the simulation model provides a means for studying the process sensitivity to condition and equipment variations. Its use will provide quick answers at a minimal expense to the user. Also, it can be expanded in more detail once the needed data are obtained. At that point it can be coordinated with an economic evaluation program so that any questions can be answered with reasonable accuracy from both a physical-chemical and economic point of view.

7.5 CONCLUSIONS

A. The proposed process under the assumptions and conditions of design shows no excessive buildup or depletion of necessary components.

B. More laboratory data are needed in the following areas:

(1) Density and heat capacity data are needed to allow better estimates for residence times, vessel volumes, evaporation rates, and heat exchange calculations.

(2) The conditions of precipitate formation need to be defined. The acidic-basic ferric sulfate system is well defined in the temperature range of interest, but the ferric hydroxide and ferrous sulfate systems are not defined in the temperature and ionic strength ranges of interest. Precipitation of ferric hydroxide can mean contamination of clean coal and reduced efficiency of oxygen usage. Iron sulfate removal energy costs are directly related to ferrous sulfate solubility, so the importance of this solubility data is obvious.

(3) Experimentation should be done to determine whether sulfur is a product of a continuous pyrite leaching operation.

(4) The leaching reaction should be studied at higher temperatures to determine whether increased temperature causes any change in the rate controlling step.

(5) Experimentation should be done to determine the correct stoichiometric coefficient for the ferric ion

involvement in the leach reaction. There is some indication that the oxygen requirement may be 50% higher than the design indicates.

C. The iron sulfates removal operation is favorably located. Ferrous sulfates can be removed at this point with a minimum amount of water evaporation. Also, the potential for ferric hydroxide or sulfate precipitation is lowest at this location.

D. The oxygen usage efficiency would be increased by installing a surge tank for additional leaching between the mixer effluent and the point where stream #16 is taken from stream #5. The capital costs should be balanced against lower oxygen cost.

E. A pH controlled acid make-up stream into the reactor effluent is needed to keep ferric precipitates from forming, adhering to the coal during filtration and leaving the process with the clean coal.

F. Regeneration of ferric ions in the mixer does improve the leach operation. The improvement studied used 9-10 moles/hour of additional oxygen. This regeneration in the mixer rapidly depleted the system of acid, so an acid make-up stream would be required. Regeneration in the mixer would also mean low oxygen efficiency as more ferric material would be removed in the iron sulfate removal stage. Part of the efficiency could be regained if the surge or holdup vessel mentioned in (D) above was used.

G. Reduction in the leach rate because of differences in pyrite structure, mesh size of the coal, etc. will lead to serious operating problems. Simulations for a hypothetical

-48 mesh coal indicate that either much higher temperatures and pressures or longer residence times will be required in the reactors. Preliminary reduction of the amount of pyrite in the coal will not solve the problem. A simulation of -48 mesh coal with half the pyrite present does not meet the specifications. The variable that could improve this situation considerably is the level of pyritic sulfur in the product. Small increases in this acceptable level can mean decreased reaction time.

H. The process responds well to large random variations in the feed. The pyrite removal remains within an acceptable range with only small and infrequent time periods in which oxygen is wasted.

I. Reductions in the pyrite feed assay which are constant for considerable periods of time will reduce the efficiency of the oxygen usage unless its flow rate is controlled by some type of on-stream pyrite feed analyzer.

J. A large reduction in the amount of pyrite in the coal fed to the system has only a small effect on the quality of the product coal. Consequently, it does not follow that a sizable reduction of the pyrite feed assay will mean a considerable plant cost reduction. There will be an operating cost savings through reduced oxygen costs, however.

K. As the product coal quality is insensitive to reductions in pyrite feed assay, it is also insensitive to increases in assay. This means that this process can handle larger amounts of pyrite by merely increasing the oxygen feed

proportionately. If additional O_2 is required, its addition in the mixer will provide a longer leach residence time.

L. At startup, care must be taken to ensure that at least minimum acid, Fe^{3+} and liquid/solid levels are maintained. Otherwise a large amount of the initial product will not be acceptable.

8.0 REFERENCES

1. U.S. Environmental Protection Agency, Office of Research and Monitoring, Washington, DC, "Chemical Desulfurization of Coal: Report of Bench-Scale Developments," Volumes 1 and 2, by J. W. Hamersma et al., Systems Group of TRW, Inc., Redondo Beach, CA, Report No. EPA-R2-73-173a and b, February 1973, Contract No. EHSD 71-7.

2. U.S. Environmental Protection Agency, Office of Research and Development, Washington, DC, "Applicability of the Meyers Process for Chemical Desulfurization of Coal: Initial Survey of Fifteen Coals," by J. W. Hamersma et al., Systems Group of TRW, Inc., Redondo Beach, CA, Report No. EPA-650/2-74-025, April 1974, Contract No. 68-02-0647.

3. U.S. Environmental Protection Agency, Research Triangle Park, NC, "Bench-Scale Development of a Process for the Chemical Extraction of Sulfur from Coal," Systems Group of TRW, Inc., Redondo Beach, CA, Contract 68-02-1336. (Report in preparation)

4. U.S. Environmental Protection Agency, Research Triangle Park, NC, "Pilot Plant Design of Meyers Process for Chemical Removal of Pyritic Sulfur from Coal," Systems Group of TRW, Inc., Redondo Beach, CA, Contract 68-02-1335. (Report in preparation)

5. Staehle, R. W., and Latanision, R. M., "Stress Corrosion Cracking of Iron-Nickel-Chromium Alloys," pp. 214-307 in Proceedings of Conference, Fundamental Aspects of Stress Corrosion Cracking, The Ohio State University, Dept. of Mechanical Engineering, Columbus, Sept. 11-15, 1967, published by National Association of Corrosion Engineers, Houston, TX, 1969.

6. English, J. L., and Griess, J. C., Corrosion 20, 138t-144t (1964).

7. Shell Development Company, Houston TX, Letter from R. J. Grabowski to Lloyd Lorenzi, Environmental Protection Agency, Contract EHSD 71-45, Task 28, "Trace Element Determination in Process Streams," 1-11-73.

8. National Research Council, Division of Chemistry and Chemical Technology, Committee on Chemical Utilization of Coal, "Chemistry of Coal Utilization," prepared by the Committee: H. H. Lowry, Chairman, Wiley, New York, 1945, volumes 1 and 2; pp. 586-588 in volume 1.

9. Pollack, S. S., Fuel 50, 453-454 (1971).

10. Western Division of Dow Chemical U.S.A., Pittsburg, CA, Letter from T. Lingafelter, to H. Farber, Midland, MI, 8-8-73.

11. Visman, J., and Hamza, H. A., "Application of Flocculants in Hydroclone Separation," The Canadian Mining and Metallurgical (CIM) Bulletin, Feb. 1973, pp. 78-85.

12. Dowell Division of Dow Chemical U.S.A., Tulsa, OK, Letter from C. F. Parks, to L. D. Boughton, Tulsa OK, "Pelletizing Tests at Bethlehem Steel Company Laboratory," 9-10-71.

13. Dowell Division of Dow Chemical U.S.A., Tulsa, OK, "Pelletizing Coal," by K. H. Nimerick, Report No. DL 8086-4, 9-21-71

14. Dowell Division of Dow Chemical U.S.A., Tulsa, OK, "Mineral Binder," by K. H. Nimerick, Report No. DL 50004 and 50005, 4-14-72.

15. U.S. Environmental Protection Agency, Research Triangle Park, NC, "An Evaluation of Coal Beneficiation by the Meyers Process," Final Report by George E. Weant, Forest O. Mixon and Faust L. Bellegia, Research Triangle Institute, RTI No. 43U-893-30, July 1974, Contract No. 68-02-1325-3.

16. Shell Development Company, Houston, TX, Letter from S. A. Shain to Lloyd Lorenzi, Environmental Protection Agency, "OAP Contract EHSD 71-45, Task No. 27," "Study of the Product Value and Pollution Aspects of By-product Iron Compounds," by S. F. Liang, 11-7-72.

17. Electric Power Research Institute, Palo Alto, CA, "Evaluation of Coal Conversion Processes to Provide Clean Fuels," Final Report, by Donald L. Katz et al., Prepared Under Research Project EPRI 206-0-0 by University of Michigan, College of Engineering, Ann Arbor, Feb. 1974, Report No. EPRI 206-0-0, Parts I, II, III.

18. U.S. Environmental Protection Agency, Office of Research and Development, Washington, DC, "Cost Analysis of Meyers Coal Desulfurization Process," by B. P. Shepherd, H. K. Michael, J. S. Wilson, The Dow Chemical Company, Freeport, TX, May 1974, Contract No. 68-02-1329.

19. Ledgemont Laboratory, Kennecott Copper Corporation, Lexington, MA, "Chemical Desulfurization of Coal," by J. C. Agarwal et al., paper presented at American Mining Congress, Coal Convention, Pittsburgh, PA, May 1974.

20. Chemical Marketing Reporter, 9-23-74.

21. Posnjak, E. and Merwin, H. E., J. Amer. Chem. Soc., 44, Pt. 2, 1965-1994 (1922).

22. Langmuir, D., "Geochemistry of Iron in a Coastal-Plain Ground Water of Camden, New Jersey Area," U.S. Geological Survey, Professional Paper 650-C, 1969, pp. C224-C235.

23. Garrels, R. M. and Thompson, M. E., Amer. J. Sci., 258-A, 57-67 (1960).

24. Carrucio, F. T., "The Quantification of Reactive Pyrite by Grain Size," Third Symposium on Coal Mine Drainage Research, Mellon Institute, Pittsburgh, PA, May 1970.

25. "Handbook of Chemistry and Physics," 53rd Edition, 1972-1973, Robert C. Weast, Editor in Chief, The Chemical Rubber Co., Cleveland, OH. pp. B62-156, C75-535, F251-276.

26. Popper, H., Ed., "Modern Cost-Engineering Techniques," McGraw-Hill, New York, 1970.

27. Miller, N. W., Dow Chemical U.S.A., Michigan Division, Midland, MI, Chlor-Alkali Plant, Private Communication, February 1974.

28. Nekervis, W. F., Dow Chemical U.S.A., Michigan Division, Midland, MI, Contract Projects, to Lloyd Lorenzi, Jr., EPA, "Coal Preparation as an Adjunct to the Conceptual Design," June 1974.

29. Seidell, A. and Linke, W. F., "Solubilities of Inorganic and Metal-Organic Compounds," 4th ed.,(2 vols.), American Chemical Company, Washington, DC, vol. 1, 1958; vol. 2, 1965.

30. Garrels, R. M. and Christ, C. L., "Solutions, Minerals and Equilibria," text ed., Harper and Row, New York, 1965.

31. Arthur D. Little, Inc., Cambridge, MA, "Service to Management Program," Report on "Powder Metallurgy," June 1969.

32. Hirschhorn, Joel S., "Introduction to Powder Metallurgy," American Powder Metallurgy Institute, New York, NY, 1969, p. 33.

33. Engineering News-Record, McGraw-Hill, New York, NY, January 2, 1975.

34. Chemical Engineering, McGraw-Hill, New York, NY, April 28, 1975, P. 180.

35. Ricci, L. J., "CE Cost Indexes Accelerate 10-Year Climb," Chemical Engineering, McGraw-Hill, New York, NY, April 28, 1975, PP 117-118.

36. National Coal Association, Washington, DC, "Coal Facts 1974-75," 1975., P. 68.

37. Ledford, W. E., Dow Chemical U.S.A., Designed Products Technical Service and Development, Private Communication, Midland, MI, September 1973.

9.0 GLOSSARY

The technical terms and abbreviations used in the text, tables and figures (other than abbreviations for chemical elements and terms previously defined for use in mathematical derivations) are listed below with the corresponding definitions. Conversions for metric and conventional engineering units are also included.

Acre	Acre (0.40 Hectares)
ASA	American Standards Association
AT or A/T	After Taxes
Ave or Avg	Average
Baf	Baffle
BHP	Brake Horsepower (U.S.) (1.01387 Metric BHP)
BT or B/T	Before Taxes
Btu, btu	British Thermal Unit (252 calories), (0.252 kcal), (1055 joules)
C	Centigrade
ca	Approximately
cal	Calorie (gm) (0.003968 Btu)
CCW	Counter-Clockwise
Ch	Channel
Cm, cm	Centimeter (0.3937 in.)
Cm^2, cm^2	Square Centimeter (0.1550 $in.^2$)
Cp	Centipoise
Cs	Centistoke
CS	Carbon Steel
CSMP	Continuous Simulation Modeling Program
Cu	Cubic
Cu ft	Cubic Feet (0.028317 M^3)

CW	Clockwise
cwt	Hundredweight (45.36 kg)
Deg	Degree
DFC	Direct Fixed Capital
DI	Ductile Iron
E_h	Electrochemical Potential
F	Fahrenheit
Fig.	Figure
ft	Feet (0.3048 M), also the symbol '
ft^2	Square Feet (0.0929 M^2)
ft^3	Cubic Feet (0.028317 M^3)
Fltg	Floating
gal	U.S. Gallons (0.0037854 M^3)
gpm	U.S. Gallons per Minute (0.22712 M^3/hr)
g or gm	Gram
GJ	Gigajoules, 1 x 10^9 joules
H	Heat of Reaction
Hd	Head
hp, HP	U.S. Horsepower (1.0139 metric hp)
hr, HR	Hour
ID	Inside Diameter
in.	Inches, (2.54 cm), also the symbol "
$in.^2$	Square Inches (6.45 cm^2)
IPS	Iron Pipe Size
K	Kelvin Temperature
kcal	Kilocalories (3.968 Btu)

kg	Kilogram (2.205 lb)
kg/cm^2	Kilograms per Square Centimeter (14.223 psi)
KW	Kilowatt
KWH, kwh	Kilowatt Hours
lb	Pound (0.4536 kg), also the symbol #
lb/hr	Pounds per Hour
LMTD	Log Mean Temperature Difference
l, L	Liter (0.2642 U.S. gal)
M	Thousand
MM	Million
M	Meter (3.2808 ft)
M^3	Cubic Meters (35.315 ft^3)(264.17 gal)
M^3/HR	Cubic Meters per Hour (4.4029 gpm)
MH	Manhole
mk	Mark
min	Minute, also the symbol '
ml	Milliliter
mm	Millimeters (0.03937 in)
mole, mol	Mole, One formula weight of an element or compound
mpf	Moisture and Pyrite Free, Without Binder
MT	Metric Ton (1.1023 short tons)(1000 kg)
MTPH	Metric Tons per Hour (1.1023 TPH)
MW	Molecular Weight, also Megawatts (1000 KW)
N.A.	Not Applicable
No.	Number, also the symbol #
OD	Outside Diameter
OAH	Overall Height
oz	Fluidounce (29.6 ml)

pH	Hydrogen Ion Concentration
PO	Purchase Order
psi	Pounds per Square Inch (0.070307 kg/cm^2)
psia	Pounds per Square Inch Absolute
psig	Pounds per Square Inch Gauge
Req'd	Required
RL	Rubber Lined
ROI	Return on Investment
ROM	Run of Mine
ROS	Return on Sales
ROTC	Return on Total Capital
rpm	Revolutions per Minute
Sec	Second, also the symbol "
Sq Ft	Square Feet (0.0929 M^2)
Stat	Stationary
SS	Stainless Steel
T, t	Short Ton (0.90718 MT)
T	Absolute Temperature
Tan	Tangent
TC	Total Capital
Ti	Titanium
TPH	Short Tons per Hour (0.90718 MTPH)
TPY	Short Tons per Year
V	Volts
Vol	Volume
Yr, yr	Year
wt	Weight

°C	Degrees Centigrade((°F-32)/1.8)
°F	Degrees Fahrenheit ((°Cx1.8) + 32)
°K	Degrees Kelvin (°C + 273.2)
%	Percent
304	Type 304 Stainless Steel
316	Type 316 Stainless Steel
'	Feet (0.3048 M)
'	Minutes
"	Inches (2.54 cm)
"	Seconds
Δ	Delta, Change or Difference
ΔT	Temperature Difference
#	Number
#	Pounds

10.0 APPENDIX

10.1 DRAWINGS

10.1.1 List of Drawings

		Page
Block Flowsheet	JN-730623	34
Process Flowsheets		
Feed Coal Preparation	B1-001-730623	93
Mixing & Reaction	B1-002-730623	96
Filtration #1	B1-003-730623	99
Extraction, Filtration, Decantation	B1-004-730623	100
Water Washing, Filtration, Decantation	B1-005-730623	103
Drying & Decantation	B1-006-730623	106
Compacting	B1-007-730623	107
Product Coal Handling	B1-008-730623	108
Iron Sulfates Removal	B1-009-730623	111
Distillation	B1-010-730623	114
Vent Collection & Scrubbing	B1-011-730623	117
Utilities	B1-012-730623	125
Index Flowsheet	B1-013-730623	91
Legend Sheet	B1-014-730623	92
Plot Plan	B2-001-730623	122
Floor Plans--1st, 2nd, 3rd Floors	B5-001-730623	123
Floor Plans--4th, 5th, 6th Floors	B5-002-730623	124

10.2 EQUIPMENT

10.2.1 List of Equipment

The equipment numbers refer to the respective equipment positions in the process flowsheets of Section 4.5.

Sector 000 - Feed Coal Preparation

001	Car Dumper House
002	Rotary Car Dumper
003	Hopper
004 A-D	Feeders
005	Collection Conveyor
006	Belt Conveyor
007	Belt Scale
008	Magnetic Separator
009	Transfer Tower
010	Distribution Conveyor
011 A&B	Rotary Plow Feeders
012	Reclaim Conveyor
013	Belt Conveyor
014	Belt Scale
015	Magnetic Separator
016	Gallery
021	Crusher-Pulverizer House
022	Surge Bin
023 A&B	Crusher Feeders
024 A&B	Crushers
025 A&B	Pulverizers
031	Belt Conveyor
032	Distributing Conveyor
033 A-D	Hoppers
034 A-D	Feeders

Sector 100 - Mixing

100 A-1	Mixer Agitator
100 ME-1	Coal Elevator
100 V-1	Mixer
100 V-2	Mixer Vent Absorber

Sector 200 - Reaction

200 E-1	Reactor Product Cooler
200 P-1A&B	Reactor Feed Pumps
200 R-1A-K	Reactors

Sector 400 - Filtration #1

400 F-1A-D	Rotary Drum Filters
400 ME-1	Conveyor

Sector 500 - Extraction

500 A-1	Extractor Agitator
500 V-1	Extractor

Sector 600 - Filtration #2 & Decantation

600 F-1A-D	Rotary Drum Filters
600 ME-1	Conveyor
600 P-1A&B	Filter Feed Pumps
600 P-2A&B	Aqueous Forwarding Pumps
600 V-1	Decanter

Sector 700 - Water Washing

700 A-1	Water Wash Tank Agitator
700 V-1	Water Wash Tank

Sector 800 - Filtration #3 & Decantation

800 F-1A-D	Rotary Drum Filters
800 ME-1	Conveyor
800 P-1A&B	Filter Feed Pumps
800 P-2A&B	Aqueous Forwarding Pumps
800 V-1	Decanter

Sector 900 - Drying, Compacting, Decantation

900 ME-1A&B	Dryers & Solvent Recovery Systems
900 ME-2A&B	Conveyors
900 ME-3	Conveyor
900 ME-4	Compactor
900 ME-5	Elevator
900 P-1A&B	Binder Solution Pumps
900 P-2A&B	Binder Unloading Pumps
900 T-1	Binder Solution Tank
900 V-1	Dryer Condensate Decanter

Sector 1000 - Product Coal Handling

1001	Belt Conveyor
1002	Transfer Conveyor
1005	Distributing Conveyor
1006 A-D	Silos
1007 A-D(1-7)	Feeders

1008	Reclaim Conveyor
1009	Car Loading House

Sector 1100 - Iron Sulfates Removal

1100 A-1	Reslurry Tank Agitator
1100 E-1	Sulfate Evaporator Heater
1100 E-2	Sulfate Cooler
1100 E-5	Flash Steam Condenser
1100 F-1A&B	Sulfate Filters
1100 F-2	Sulfate Filter
1100 ME-1	Wash Water Heater
1100 ME-2	Sulfate Waste Dryer
1100 P-1A&B	Sulfate Forwarding Pumps
1100 P-2A&B	Sulfate Evaporator Circulating Pumps
1100 P-3A&B	Recovered Water Feed Pumps
1100 P-4A&B	Sulfuric Acid Feed Pumps
1100 T-1	Wash Water Surge Tank
1100 T-2	Sulfuric Acid Storage Tank
1100 V-1	Sulfate Evaporator
1100 V-2	Reslurry Tank

Sector 1400 Distillation

1400 E-1	Solvent Evaporator Reboiler
1400 E-2	Solvent Evaporator Feed/Overhead Exchanger
1400 E-3	Solvent Evaporator Condenser
1400 E-4	Solvent Cooler
1400 F-1	Solvent Evaporator Feed Filter
1400 P-1A&B	Solvent Evaporator Feed Pumps
1400 P-3A&B	Recovered Solvent Feed Pumps
1400 P-4	Sulfur Loading Pump

1400 P-5	Solvent Makeup Feed Pump
1400 T-1	Solvent Evaporator Feed Tank
1400 T-2	Recovered Solvent Surge Tank
1400 T-3	Sulfur Surge Tank
1400 T-4	Makeup Solvent Storage Tank
1400 V-1	Solvent/Sulfur Distillation Column
1400 V-2	Accumulator

Sector 1500 - Vent Scrubbing

1500 E-1	Scrubber Cooler
1500 P-1A&B	Scrubber Circulating Pumps
1500 P-2A&B	Recovered Naphtha Pumps
1500 V-1	Scrubber Tower
1500 V-2	Scrubber Surge-Decanter

Sector 2000 - Utilities

2100	Steam Generation Plant
2200	Water Supply
2201	Process Water System
2202	Potable Water System
2203	Fire Protection System
2204	Cooling Water System
2300	Oxygen-Nitrogen Plant
2400	Instrument Air System

10.2.2 Equipment Specifications

The following equipment specification sheets are arranged according to sector and equipment number.

PLANT COAL PYRITIC SULFUR REMOVAL			FILE JOB NO. 730613
LOCATION	BLDG. NO.		CHARGE NO.
MANUFACTURER	NO. UNITS ONE		B/M NO.
			P. O. NO.

1	TYPE	COAL Receiving, Conveying, Storage, Handling
2		System
3		
4		
5		
6		
7	DESIGN CONDITIONS	
8		
9		
10		
11		
12		
13		
14		
15	SPECIFICATIONS	001 Car Dumper House
16		002 Rotary Car Dumper
17		003 Hopper
18		004A-D Feeders - 4 Req'd
19		005 Collection Conveyor 60" x 65'
20		006 Belt Conveyor 60" x 475' 2500 TPH
21		475' Long Lift Deck Type
22		Gallery with walkway one side
23		Hood over Belt
24		007 Belt Scale
25		008 Magnetic Separator
26		009 Transfer Tower 100' high. Enclosed
27		With Sampling System
28		010 Distributing Conveyor 60" x 620' 2500 TPH
29		With motor propelled tripper
30		Covered gallery & open "A" Frame
31		Structure over live storage
32		pile 80' x 475'
33		011 A&B Rotary plow feeders complete
34		with rails, supports, feed slots
35		012 Reclaim Conveyor 36" x 720' 536 TPH
36		013 Conveyor 36" x 500' x 115' Lift 536 TPH
37		250ft of hood, deck type gallery
38		with walkway one side
39		014 Belt Scale
40		015 Magnetic Separator
41		016 Gallery
42		
43		
44		
45		
46		
47		
48		
49		
50		

SPEC. BY EFH	THE DOW CHEMICAL COMPANY					002	EQUIP. NO. 001-016
CHECKED:	SERVICE COAL RECEIVING & STORAGE					MISCELLANEOUS EQUIPMENT SPECIFICATIONS	
APP'D:							
DATE: 1/1/74	REVISION DATE	A	3/6/74	B		C	SPEC. NO.
VENDOR TO COMPLETE ALL INFORMATION MARKED					SHEET OF		

25260 3-68

PLANT COAL- PYRITIC SULFUR REMOVAL			FILE/JOB NO. 756623
LOCATION	BLDG. NO.		CHARGE NO.
MANUFACTURER	NO. UNITS ONE		B/M NO.
			P. O. NO.

1	TYPE	COAL CRUSHING & PULVERIZING
2		
3		
4		
5		
6		
7	DESIGN CONDITIONS	
8		
9		
10		
11		
12		
13		
14		
15	SPECIFICATIONS	021 Crusher-Pulverizer House
16		022 SURGE BIN 100 TON with 2 Discharge Gates
17		023A+B Crusher Feeders (2 Req'd) 268 TPH EACH
18		024 A&B Crushers (2 Req'd) " " "
19		025 A&B Pulverizers (2 Req'd) " " "
20		
21		
22		
23		
24		
25		
26		
27		
28		
29		
30		
31		
32		
33		
34		
35		
36		
37		
38		
39		
40		
41		
42		
43		
44		
45		
46		
47		
48		
49		
50		

SPEC. BY EFH	DOW THE DOW CHEMICAL COMPANY	000	EQUIP. NO. 021-025
CHECKED:	SERVICE COAL CRUSHING & PULVERIZING	MISCELLANEOUS EQUIPMENT SPECIFICATIONS	
APP'D:			
DATE: 1/15/74	REVISION DATE A B C	SPEC. NO.	
VENDOR TO COMPLETE ALL INFORMATION MARKED	SHEET OF		

25260 3-68

PLANT	COAL- PYRITIC SULFUR REMOVAL		FILE/JOB NO. 730623
LOCATION	BLDG. NO.		CHARGE NO.
MANUFACTURER	NO. UNITS	ONE	B/M NO.
			P. O. NO.

TYPE

PULVERIZED COAL HANDLING

DESIGN CONDITIONS

SPECIFICATIONS

031 Belt Conveyor 36" x 240' x 65' Lift 536 TPH
with totally enclosed gallery
with bridge truss & Transfer Tower
032 Distributing Belt Conveyor 60" x 600' 536 TPH
with 3 plows
with totally enclosed gallery
033A-D Hoppers - 50 Ton - 4 Req'd
With Discharge gates
034A-D Feeders 0-135 TPH EACH 4 Req'd
(Weight Recording Control)

SPEC. BY EFH	DOW THE DOW CHEMICAL COMPANY	000	EQUIP. NO. 031-034
CHECKED:	SERVICE PULVERIZED COAL HANDLING	MISCELLANEOUS EQUIPMENT SPECIFICATIONS	
APP'D:			
DATE: 1/15/74	REVISION DATE A 3/6/74 B C	SPEC. NO.	
VENDOR TO COMPLETE ALL INFORMATION MARKED	SHEET OF		

25260 3-68

PLANT Coal- Pyritic Sulfur Removal			FILE/JOB NO. 730623
LOCATION	BLDG. NO.		CHARGE NO.
MANUFACTURER Lightnin 89QS75	NO. UNITS 1 per Train		B/M NO.
			P. O. NO.

OPERATING CONDITIONS

1. Mounting: Portable - Permanent for Open Tank - Side Entering - (Top Entering) - Bottom Entering
2. Type of Operation: Batch - (Continuous) Operating Pressure 14.7 psia Operating Temperature °F 215

Materials to Be Mixed	State	Lb per hr	Viscosity - cp	Spec. Grav.	°F
Coal	Solid	267695		1.36	70
$FeSO_4$	Liquid	13227	0.29 CS	1.18	215
$Fe_2(SO_4)_3$		65519			
H_2SO_4		4269			
H_2O		453035			
Final Mixture	Slurry	808353		1.2	212

11. Solids Present Are: (Soluble) (Insoluble) (Abrasive) Crystalline - Sticky or Gummy - Light or Fluffy
12. Particle Size or Sieve Analysis: 100 Mesh (top size)
13. Settling Rate of Solids: Very slow (days)
14. Foaming Tendency of Mixture: Low - Medium - High No
15. Class of Agitation: Blend - Dissolve - Disperse Gas - (Suspend Solids) - Heat Transfer - Emulsify
16. Other: Leach
17. Degree of Agitation: Mild - (Medium) - Violent
18. Too Much Agitation Will Take excessive power
19. Too Little Agitation Will Not wet and Leach
20. Largest Batch or Greatest Liquid Depth:
21. Smallest Batch or Lowest Liquid Depth:
22. Mixer Shall Be Designed to In Minutes
23. Mixer Will - (Will Not) Be operated While Filling or Drawing Off
24. Past Experience: None
25.

TANK & INSTALLATION DATA

26. Vessel Type: Open Top - (Closed Top) Horizontal (Vertical) (API Tank) - Other:
27. Size: 24'-0" ~~in~~ ID by 25'-0" ~~in~~ Straight Side or In. Length
28. Bottom Type: (Flat) Flanged & Dished - 2:1 Semi Elliptical -
29. Top Type: Flat - Flanged & Dished - 2:1 Semi Elliptical (Cone)
30. Vessel Can Be Altered: (Yes) No; Describe
31. Design Pressure 0 psig; Design Temperature 215 °F
32. Dow Drawing No. None ; Copies Attached: Yes - (No)
33. Size of Opening for Impeller Installation 20" ; Size of Nozzle for Mounting Agitator As req'd
34. Selected Mounting Flange for Agitator: Size ; Rating ; Facing
35. Location of Mounting Flange: Top
36. Baffles: No. 4 ; Width 24 in.; Length in.; Horizontal - (Vertical) Other: As recommended
37. Stabilizing Ring Is - Is Not Required; Size
38. Shaft Seal: Mechanical - (Packing) Other: ; Type Lubrication Water
39. Special Requirements:
40. Step Bearing Is - (Is Not) ~~Permissible~~ Preferable Head Room Available for Installing Mixer: Yes
41. Materials of Construction for Wetted Parts: Neoprene Covered & 316 Stainless Steel

MIXER & DRIVER DATA

42. Mixer Model No. Driver Supplied by Vendor ; Gear Supplied by Vendor
43. Motor Drive: Mfgr. ; Speed 1750 rpm; Horsepower 75 hp; Enclosure TEFC
44. NEMA Frame ; Volts 440 ; Phase 3 ; Cycles 60
45. Turbine Drive: Mfgr. ; Speed rpm; Horsepower hp; Water Rate lb/hr
46. Inlet Steam: Pressure psig at °F
47. Exhaust Steam: Pressure psia - psig at °F
48. Other:
49. Gear: Mfgr. ; Ratio ; AGMA Rating ; Output Speed rpm
50. Shaft Coupling: Describe
51. Mechanical Seal: Describe
52. Stuffing Box: Describe
53. Shaft: Size 5½ in. OD by 288" Length from Mounting Flange
54. Impeller: Type 2-Axial ; Size 93" in. OD: No. Blades ; Removable from Shaft: (Yes) No
55. Additional Data:

SPEC. BY EFH	DOW THE DOW CHEMICAL COMPANY	100	EQUIP. NO. A-1
CHECKED:	SERVICE MIXER AGITATOR	AGITATOR OR MIXER SPECIFICATIONS	
APP'D:			
DATE: 2/8/74	REVISION DATE A 3/1/74 B 7/17/74 C	SPEC. NO.	
VENDOR TO COMPLETE ALL INFORMATION MARKED _____	SHEET OF		

26040 3-68

PLANT Coal - Pyritic Sulfur Removal			FILE/JOB NO. 730623
LOCATION	BLDG. NO.		CHARGE NO.
MANUFACTURER	NO. UNITS 1 per Train		B/M NO.
			P. O. NO.

1	TYPE	Bucket Elevator
2		
3		
4		
5		
6		
7	DESIGN CONDITIONS	150 Tons/hr
8		Coal 100 Mesh (Topsize)
9		40' Height Base to Discharge (Approximate)
10		Dust Tight Enclosure
11		Fed from Feeder #034
12		Discharge to 100-V-1 Mixing Vessel 25' Above Grade
13		
14		
15	SPECIFICATIONS	
16		
17		
18		
19		
20		
21		
22		
23		
24		
25		
26		
27		
28		
29		
30		
31		
32		
33		
34		
35		
36		
37		
38		
39		
40		
41		
42		
43		
44		
45		
46		
47		
48		
49		
50		

SPEC. BY EFH	DOW THE DOW CHEMICAL COMPANY	100	EQUIP. NO. ME-1
CHECKED:	SERVICE COAL ELEVATOR	MISCELLANEOUS EQUIPMENT SPECIFICATIONS	
APP'D:			
DATE: 2/8/74	REVISION DATE A B C	SPEC. NO.	
VENDOR TO COMPLETE ALL INFORMATION MARKED	SHEET OF		

25260 3-68

PLANT	Coal- Pyritic Sulfur Removal		FILE/JOB NO. 730623
LOCATION		BLDG. NO.	CHARGE NO.
MANUFACTURER		NO. UNITS 1 per Train	B/M NO.
			P. O. NO.

FIELD ERECTED (YES) NO | NO. UNITS 1 per Train | TOTAL VOLUME 85,000 GAL

1	DESIGN DATA	Operating Pressure psig	0
2		Operating Temperature °F	215
3		Liquid Specific Gravity	1.2
4		Contents Lethal	Yes (No)
5		Design Pressure psig	10
6		Design Temperature °F	250
7			
8			
9		Hydrostatic Test psig	Full of Water
10		Shell / Heads Corr. Allow. in.	
11		Shell / Heads Joint Eff. %	
12		Code:	Stamp Yes (No)
13		Radiograph: No	Stress Relieve: NO
14		National Board No.	
15		Type Supports: Skirt	
16		Insulation: 1"	
17		Fireproofing: No	
18		Sandblast: NO	Paint: NO
19		Manhole 2 Hinged (Davited)	Other:
20		Platform Clips: NO	Ladder Clips: NO / Insul. Rings: YES
21		Pipe Supports: NO	
22		Wind Load: Per Code	Seismic: Per Code
23		Wt. Empty lb	Wt Full of Water lb

		Item	Thickness	Mat'l Class	Mat'l - Minimum Quality
24	MATERIALS				
25		Shell	in.		Steel
26		Heads	in.		Steel
27		Lining	3/16 in.		Neoprene
28			in.		
29			in.		
30		Nozzle Necks			Steel Neo Line
31		Flanges			" " Face
32		Coupling			
33		M.H. Cover			Steel " Face
34		Supports			Steel
35		Bolts/Studs			
36		Nuts			
37		Gaskets			

		Service	Mark	No.	Size	Rating	Face	Type
38	NOZZLE SCHEDULE							
39		Coal Feed	A	1	⊗	⊗	⊗	
40		Agitator	B	1	⊗⊗	⊗⊗	⊗⊗	
41		100-V-2	C	1	39"	25#	FF	
42		Feed	D	1	12"	150#	FF	
43		LC	E	2	2"	"	"	
44		TE	F	1	2"	"	"	
45		Steam	G	1	2"	"	"	
46		Outlet	H	1	12"	"	"	
47		Manhole	J	2	20"	25#	"	
48			K					
49			L					
50			M					
51			N					
52			P					
53			Q					
54			R					
55		*Nozzle to be Plugged or Blinded						

⊗ To Match 100-ME-1
⊗⊗ To Match 100-A-1
To match 100-V-2

VESSEL SKETCH

24' Dia
25' Straight Side
Flat Top
Flat Bottom slope to outlet Nozzle 1/4"/ft
Spark test after lining

See BI-002-730623 For Arrangement & Nozzles

For Further Details, See Sheet No.

SPEC. BY EFH	DOW THE DOW CHEMICAL COMPANY	100	EQUIP. NO. V-1
CHECKED:	SERVICE MIXER	VERTICAL VESSEL SPECIFICATIONS	
APP'D:			
DATE: 2/8/74	REVISION DATE A 3/1/74 B C	SPEC. NO.	
VENDOR TO COMPLETE ALL INFORMATION MARKED _____	SHEET OF		

25840 3-68

PLANT Coal. Pyritic Sulfur Removal			FILE/JOB NO. 730623
LOCATION	BLDG. NO.		CHARGE NO.
MANUFACTURER	NO. UNITS 1 per Train		B/M NO.
			P. O. NO.
TYPE	FIELD ERECTED YES (NO)	NO. UNITS 1	

DESIGN DATA

1	Op. Press. 0 psig	Op. Temp. 212 °F	Liquid Sp. Gr. 1.18	
2	Des. Press. 10 psig	Des. Temp. 212 °F	Contents Lethal Yes (No)	
3	Max. Allow. Press. (New & Cold) psig; Limited By			
4	Hydro. Test 15 psig	Code:	Stamp Yes (No)	
5	Corr. Allow. in.: Shell ; Heads		Radiograph No	
6	Joint Efficiency %: Shell ; Heads		Stress. Rel. NO	
7	Insulation: 1"	Self Supporting (Yes) No	Sandblast: NO	
8	Fireproofing: NO		Paint: NO	
9	Manhole: Hinged (Davited) Other:			
10	Platform Clips: NO		Ladder Clips: NO	
11	Pipe Supports:		Insul. Rings: Yes	
12	Wind Load:		Seismic:	
13	Shipping Wt. lb		Wt. Full lb	

TRAYS & INTERNALS

	Tray No.	Diam.	Spacing	Type	Material	Tray Installation
14						
15	Thru					Removable Yes No
16	Thru					Cartridge Support Ring
17	Thru					Tray Manway Yes No
18	Thru					Manway Size in.
19	Contact Device: Bubble Caps-Valves-Perforations					Weir Set. (Above Floor) in.
20	Describe:					Adjustable to in.
21						(Adj. Slots Sealed at All Settings)
22	Packing: Ceramic Saddles 6'-6" Depth					
23	Demister: NO					

MATERIAL SPECIFICATIONS

	Item	Thickness	Mat'l Class	Material - Minimum Quality
24				
25	Shell-Top	in.		Steel-
26	Intermed	in.		"
27	Bottom	in.		"
28	Heads-Top	in.		Steel
29	Intermed	in.		
30	Bottom	in.		None
31	Cone Section	in.		
32	Lining	3/16 in.		Neoprene
33		in.		
34	Nozzle Necks			Steel Neoprene Lined
35	Flanges			" " Faced
36	Coupling			None
37	M.H. Cover			Steel Neoprene Faced
38	Skirt			—
39	Bolts/Studs			Steel
40	Nuts			"
41	Noz. Gaskets			Neoprene
42	Tray Gaskets			

NOZZLE SCHEDULE

	Service	Mk	No.	Size	Rtg	Face	Type	Service	Mk	No.	Size	Rtg	Face	Type
43														
44	Feed	A	1	2"	150	FF		Pr. Relief	N	—				
45	Reflux	B	—					Level Cont	P	—				
46	OH Vapor	C	1	3"	"	"		Samples	Q	—				
47	Btms. Out	D	—						R					
48	Reboil Vap.	E	—						S					
49	Reboil Liq.	F	—						T					
50	Drain	G	—						U					
51	Manholes	H	1	18"	25#	FF			V					
52	Handholes	J	—						W					
53	Th. Wells	K	—						X					
54	Pr. Gages	L	—						Y					
55	Gage Gl.	M	—						Z					

TOWER SKETCH

3'-3" O.D.
8'-2" O.A Height
Mounts on nozzle of 100-V-1

SPEC. BY EFH	DOW THE DOW CHEMICAL COMPANY	EQUIP. NO. 100	EQUIP. NO. V-2
CHECKED:	SERVICE MIXER VENT ABSORBER	TOWER SPECIFICATIONS	
APP'D:			
DATE: 2/8/74	REVISION DATE A B C	SPEC. NO.	
VENDOR TO COMPLETE ALL INFORMATION MARKED _____	SHEET OF		

14630 3-68

PLANT	Coal-Pyritic Sulfur Removal		FILE/JOB NO. 730623
LOCATION		BLDG. NO.	CHARGE NO.
MANUFACTURER		NO. UNITS / per Train	B/M NO.
			P. O. NO.
DUTY/UNIT 43,700,000 BTU/HR	NO. UNITS / per Train	SHELLS/UNIT /	TEMA SIZE/TYPE

1	TYPE	(Horiz.) Vert. Sloped ° to horiz.	(FTS) with Exp. Joint	U-Tube	Kettle	Coil	Hairpin	Box
2		Floating Hd.-Pull Thru-Clamp Ring-Packed	Thermosyphon	Fintube	Other:			

3	PERFORMANCE OF ONE UNIT	Additional Proc. Data on Sheet No.		Inlet - SHELL SIDE - Outlet		Inlet - TUBE SIDE - Outlet		
4		Fluid		(60) Water (61)		(9) Slurry (10)		
5		Total Flow	lb/hr					
6		Liquid	lb/hr	2186000		722000		
7		Density	lb/cu ft	1.0 sp gr		1.25 sp gr		
8		Viscosity	(CS)-CP	0.29		0.76		
9		Specific Heat	Btu/lb-°F	1.0		0.759		
10		Thermal Conductivity	Btu/hr-sq ft-°F/ft					
11		Vapor	lb/hr					
12		Mol Wt Density	lb/cu ft					
13		Viscosity	CS-CP					
14		Specific Heat	Btu/lb-°F					
15		Thermal Conductivity	Btu/hr-sq ft-°F/ft					
16		Latent Heat	Btu/lb					
17		Non-Condensables	lb/hr		M.W. =		M.W. =	
18		Velocity Max./Min.	ft/sec			10		
19		Norm. Max. Operating Temp.	°F	85	105	305 310	216	216
20		Operating Press. (Inlet)	psig	45	40	140	125	
21		Pressure Drop	psi	Allow. 5	Calc.	Allow 10	Calc. 5.13	
22		Film Coeff.	BTU/Hr. Sq. Ft.					
23		Fouling Resistance,	hr-sq ft-°F/Btu:					
24		Over-all Coefficient "U"o	Btu/hr-sq ft. °F; Clean		Service 500	LMTD (Corrected) 163	°F	
25		Installed Area/Unit 550	sq ft (Outside) Including-Excluding Area in tube sheets.					

26	DESIGN DATA PER SHELL		SHELL SIDE	TUBE SIDE	Shell ID (Approximate)	in.
27		Design Temperature °F	350	350	No. Tubes (Approximate) 80	
28		Design Pressure psig	150	150	Tube OD 1 in.	Tube Gage 12 BWG
29		Hydrostatic Test psig	225	225	Tube Length 26'3" (8M)	ft
30		Corrosion Allow./Lining in.			Tube Pitch △ □ ◇ △	in.
31		Number of Passes			Joint	
32		Insulation	1"	1"	Make/Type Fintubes	
33		Cross Baffles: Type ; Segment Cut %			No. Fins per tube;	per in.
34		Number ; Spacing Approx. Equal - See Sheet No.			Fin Height in.	Fin Thick. in.
35		Provide in. Horizontal Cut on Bottom for Condensate Drain			Vessel Supports/(Saddles) Lugs Other;	
36		Long Baffles: Type ; Number			Weir Height in.; Shell After Weir	in.
37		Impingement Baffle Yes-(No)	Condensate Lift Yes-(No)	Removable Bundle Yes-(No)	Cathodic Protection Yes-(No)	
38		TEMA Class	Lethal Yes-(No)	Code (ASME) National Board Other:		Stamp (Yes)-No
39		Spot Radiograph: Shell Shell Cover Channel		Stress Relieve: Shell Shell Cover Channel		Floating Head
40		Weight Complete Empty/Full of Water /			lb	Weight Bundle Only lb
41		Sandblast: NO	Paint: NO	Maintain	Shell ID Tube Count	Installed Area+ %- %

42	NOZZLES PER SHELL		SHELL SIDE				TUBE SIDE					MATERIAL SPECIFICATIONS	
43		Service	Mk	Size	Rtg	Face	Type	Mk	Size	Rtg	Face	Type	Tubes Titanium	Chan. Noz. Necks Ti Lined
44		Inlet	60	12"	150#	RF		9	8"	150#	RF		Stat Tube Sheet " Faced	Chan. Noz. Flanges "
45		Outlet	61	12"	"	"		10	8"	"	"		Flg. Tube Sheet —	Channel Flanges "
46		Drain	-	2"	"	"							Cross Baf./Tube Sup. Steel	Flg. Head
47		Vent	-										Long Baffles —	Flg. Hd. Flange
48													Impinge. Baffle Steel	Clamp Ring
49													Weir/Lift —	Bolts/Studs
50													Tie Rods & Spacers Steel	Nuts
51													Shell Steel	Vessel Supports
52													Shell Cover	GASKETS & PACKING
53		See Nozzle Sketch on Sheet No.											Channel Ti Lined	Shell Cover
54	CONN.	Shell Side:			Parallel Banks of				Shells in Series				Ch. Cover/Bonnet "	Shell-Chan. Side
55		Tube Side::			Parallel Banks of				Shells in Series				Shell Noz. Necks Steel	Channel
56		Stacked:			Wide				High				Shell Flanges "	Channel Cover
														Flg. Hd.

SPEC. BY EFH	THE DOW CHEMICAL COMPANY	200	EQUIP. NO. E-1
CHECKED:	SERVICE REACTOR PRODUCT COOLER	HEAT EXCHANGER SPECIFICATIONS	
APP'D:			
DATE: 1/23/74	REVISION DATE A B C	SPEC. NO.	
VENDOR TO COMPLETE ALL INFORMATION MARKED _____	SHEET OF		

17180 2-68

PLANT	Coal- Pyritic Sulfur Removal		FILE/JOB NO. 730623
LOCATION		BLDG. NO.	CHARGE NO.
MANUFACTURER		NO. UNITS 2 per Train	B/M NO.
			P.O. NO.

MODEL 6x8-15 NO. UNITS 2 ASA PUMP [X] YES [ ] NO ASA DESIGNATION

SERVICE CONDITIONS

1	Liquid Pumped: Sulfate & Coal Slurry	Max. Capacity at P.T. 808,000 #/hr	1350 gpm
2	Pumping Temperature (P.T.) 215 °F	Discharge Pressure 157 psia	ft.
3	Specific Gravity at P.T. 1.2	Suction Pressure 39 psia	50 ft.
4	Viscosity at P.T. 0.29 (cs) cp	Differential Pressure 116 psi	
5	Vapor Pressure at P.T.	Differential Head 227	ft.
6	Corrosion or Erosion Factors: < 100 mesh coal	NPSH Available	ft.
7		NPSH Required (Water)	ft.

CONSTRUCTION DETAILS

8	Arrangement: (Horiz.) Vert.-In Line	Suction (Single) Double
9	Direction of Rotation Facing Pump Coupling: CW - CCW	Speed: 1750 rpm
10	Case: Design Pressure psig	Number of Stages 1 ; Shut-Off Pressure ft.
11	Max. Allow. Working Press. psig	Volumetric Efficiency at Rating %
12	Split: Horiz-Vert-Barrel	Impeller Type Open
13	Impeller Diameter: Supplied 15 inches;	Maximum 15 inches; Minimum 11 inches
14	Vent and Drain Tapped: Yes - No	Bearings: Thrust Type
15	Nozzles / Size / Rating / Facing / Location	Radial Type
16	Suction 8"	Lubrication on Bearings; Oil (Grease)
17	Discharge 6"	Oiler: Yes - No; Type
18	Vents	Coupling (Yes) - No; Mfr.
19	Drains	Coupling Guard (Yes) - No
20	Cooling H_2O	Baseplate: (Yes) - No; Type
21	Water Cooling: Casing-Stuff. Box-Bearings-Pedestal-Gland-(None)	Total Water Required: gpm
22	Smothering Gland: Yes - No	Lubrication on Stuffing Box: Oil-Grease-None Water
23	Packing: (Yes) - No; Type	Sealing Oil Connection: (Yes) - No Water
24	Mechanical Seal: Yes (No) Furnished by;	; Mfr. Type
25	Single - Double-Inside-Outside-Balanced-Unbalanced	
26	Rotary Unit ; Seal Ring	; Face Material ; Shaft Packing
27	Insert ; Reversible: Yes - No	; Face Material
28	Insert Mounting: Clamped In - "O" Ring - Press Fit	
29	Gland ; Plain: Yes - No	Throttle Bushing Carbon: Yes - No ; Other
30	Gland/Stuffing Box Machined & Tapped for: Dead - End Lub. - Circulating Lub. - Quenching - Vent & Drain	
31	Flushing Seal Faces with Discharge Bypass - Flushing Seal Faces with External Fluid	
32	Auxiliary Stuffing Box Req'd: Yes - No	
33	Weight of Pump	lb; Weight of Base lb
34	Weight of Driver	lb; Shipping Weight lb

MATERIALS

35	Casing & Covers: 316	Shaft: Steel
36	Casing Wear Rings: 316	Shaft Sleeves: 316
37	Impeller: 316	Lantern Rings:
38	Impeller Wear Rings: 316	Glands:
39	Stuffing Box Bushings: 316	Gaskets:

DRIVER

40	Furnished by: Vendor ; Type (Elec. Motor) - Steam Turbine - Other	(Direct) Gear - Belt
41	Electric Motor: Make Mounted by Vendor	Steam Turbine: Make Mounted by
42	Enclosure TEFC SF Temp Rise °C	Model:
43	Insulation Frame	Horsepower hp ; Speed rpm
44	Estimated BHP Req'd. 108 hp	Inlet Steam Press., psig: Normal ; Max
45	Nominal Motor Size (Non-overloading) 125 hp	Inlet Steam Temp., °F: Normal ; Max.
46	Speed rpm	Water Rate: lb/hr
47	Volts ; Phase ; Cycle	Vacuum (If any) mm - in. Hg - psia
48	Speed Reducer: Integral - Separate	Back Pressure psig
49	Mfr. Ratio	Nozzles / Size / Rating / Facing / Location
50	Model Class	Inlet
51	See Driver Specification No.	Exhaust

TESTS

52	Performance Curve: (Yes) - No; Curve No.	Serial Number
53	Certified: Yes (No)	Outline Drawing
54	Hydrostatic Test: (Yes) - No; Pressure psig	Cross Section Drawing
55	Shop Inspection: Yes (No)	Bulletin No. Page No.

MISC.

SPEC. BY EFH	DOW THE DOW CHEMICAL COMPANY	200 EQUIP. NO. P-1A&B
CHECKED:	SERVICE REACTOR FEED PUMP	CENTRIFUGAL PUMP SPECIFICATIONS
APP'D:		
DATE: 2/8/74	REVISION DATE A B C	SPEC. NO.
VENDOR TO COMPLETE ALL INFORMATION MARKED _____	SHEET OF	

18370D 4/73

PLANT	Coal- Pyritic Sulfur Removal		FILE/JOB NO. 736623
LOCATION		BLDG. NO.	CHARGE NO.
MANUFACTURER		NO. UNITS 10 per Train	B/M NO.
			P. O. NO.

FIELD ERECTED (YES) NO | NO. UNITS 10 per Train | TOTAL VOLUME 90,000 (Each) GAL

1	DESIGN DATA	Operating Pressure psig	65 (at top)	
2		Operating Temperature °F	310	
3		Liquid Specific Gravity	1.2 (Slurry)	
4		Contents Lethal	Yes (No)	
5		Design Pressure psig	125	
6		Design Temperature °F	350	
7				
8				
9		Hydrostatic Test psig	115	
10		Shell / Heads Corr. Allow. in.	0	0
11		Shell / Heads Joint Eff. %	(1)	(1)
12		Code: ASME	Stamp (Yes) No	
13		Radiograph: No	Stress Relieve: No	
14		National Board No.		
15		Type Supports: Skirt - 4'-0" to Bottom Nozzle		
16		Insulation: No		
17		Fireproofing: No		
18		Sandblast: No	Paint: Prime	
19		Manhole 2 Hinged (Davited) Other:		
20		Platform Clips: NO	Ladder Clips: NO	Insul. Rings: NO
21		Pipe Supports:		
22		Wind Load: Per Code	Seismic: Per Code	
23		Wt. Empty (1) lb	Wt Full of Water (1) lb	

		Item	Thickness	Mat'l Class	Mat'l - Minimum Quality
24	MATERIALS				
25		Shell	(1) in.		Steel
26		Heads	(1) in.		Steel
27		Lining	1/4 in.		Neoprene
28		"	4 1/2 in.		Acid Brick
29			in.		
30		Nozzle Necks			Porcelain Sleeves
31		Flanges			Titanium Faced
32		Coupling			None
33		M.H. Cover			Titanium Faced
34		Supports			Steel Skirt
35		Bolts/Studs			
36		Nuts			
37		Gaskets			

		Service	Mark	No.	Size ⊗	Rating	Face	Type
38	NOZZLE SCHEDULE							
39		Vent	A	1	6"	150#		
40		LT	B	2	2"	"		
41		TE	C	2	2"	"		
42		Spargers	D	2	8"	"	⊗⊗	
43		Outlet	E	1	3"	"		
44		Inlet	F	1	3"	"		
45		Manhole	G	2	24"	"		
46			H					
47			J	–				
48			K					
49			L					
50			M		⊗	ID of Sleeve		
51			N		See Nozzle Detail			
52			P		⊗⊗	See Sparger		
53			Q			Details		
54			R					
55		*Nozzle to be Plugged or Blinded						

VESSEL SKETCH

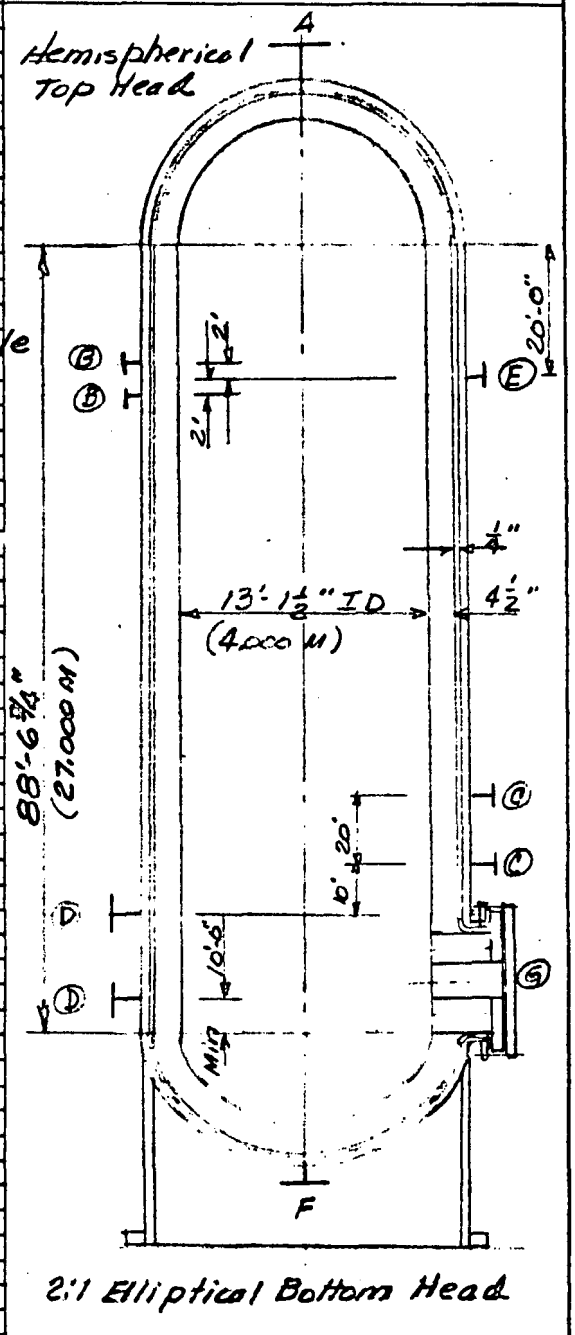

For Further Details, See Sheet No.

SPEC. BY EFH	THE DOW CHEMICAL COMPANY	200	EQUIP. NO. R-1A-K
CHECKED:	SERVICE REACTORS	VERTICAL VESSEL SPECIFICATIONS	
APP'D:			
DATE: 2/8/74	REVISION DATE A 11/1/73 B C	SPEC. NO. Sheet #1	
VENDOR TO COMPLETE ALL INFORMATION MARKED (1)	SHEET OF		

25840 3-68

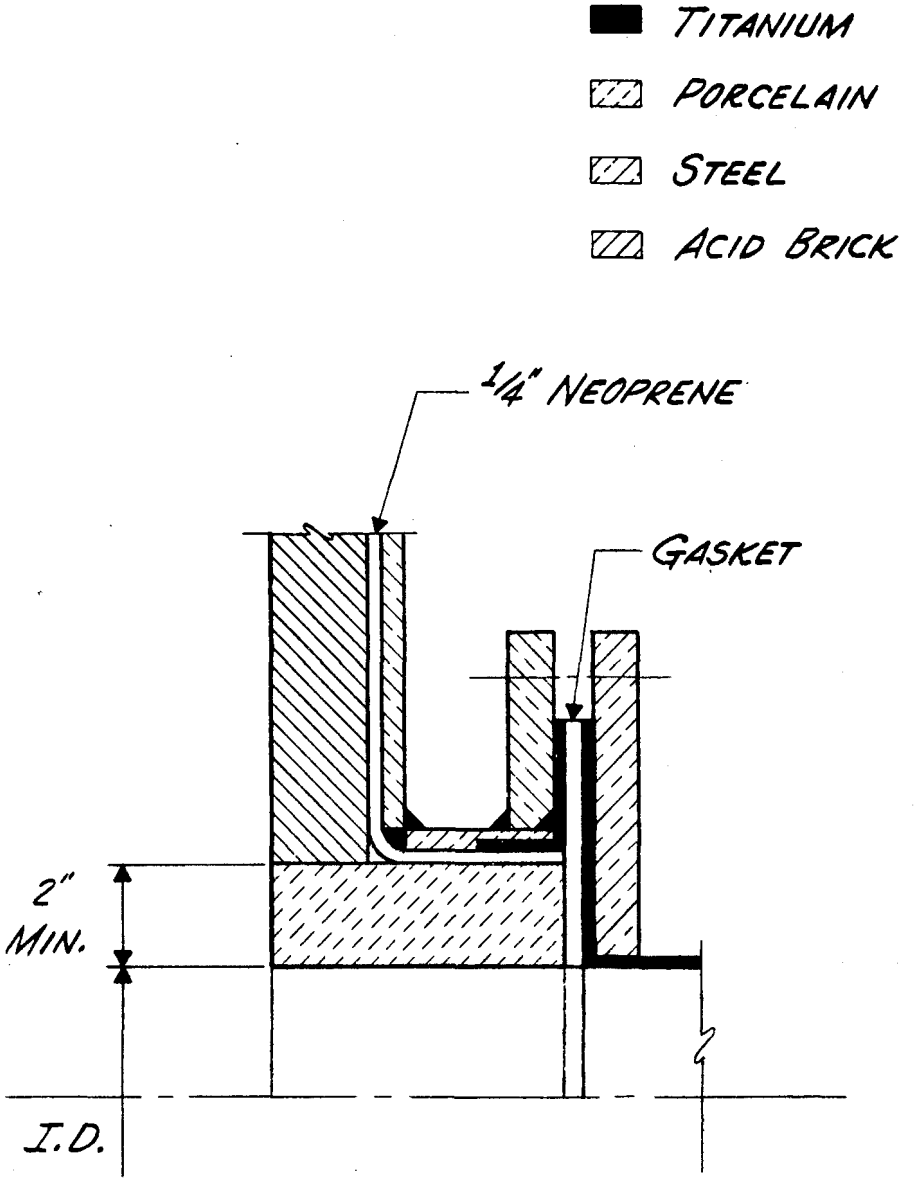

REACTOR
NOZZLE DETAIL

JOB Nº 730623
SPEC. NO. 200-R-1-A-K
SHEET 2

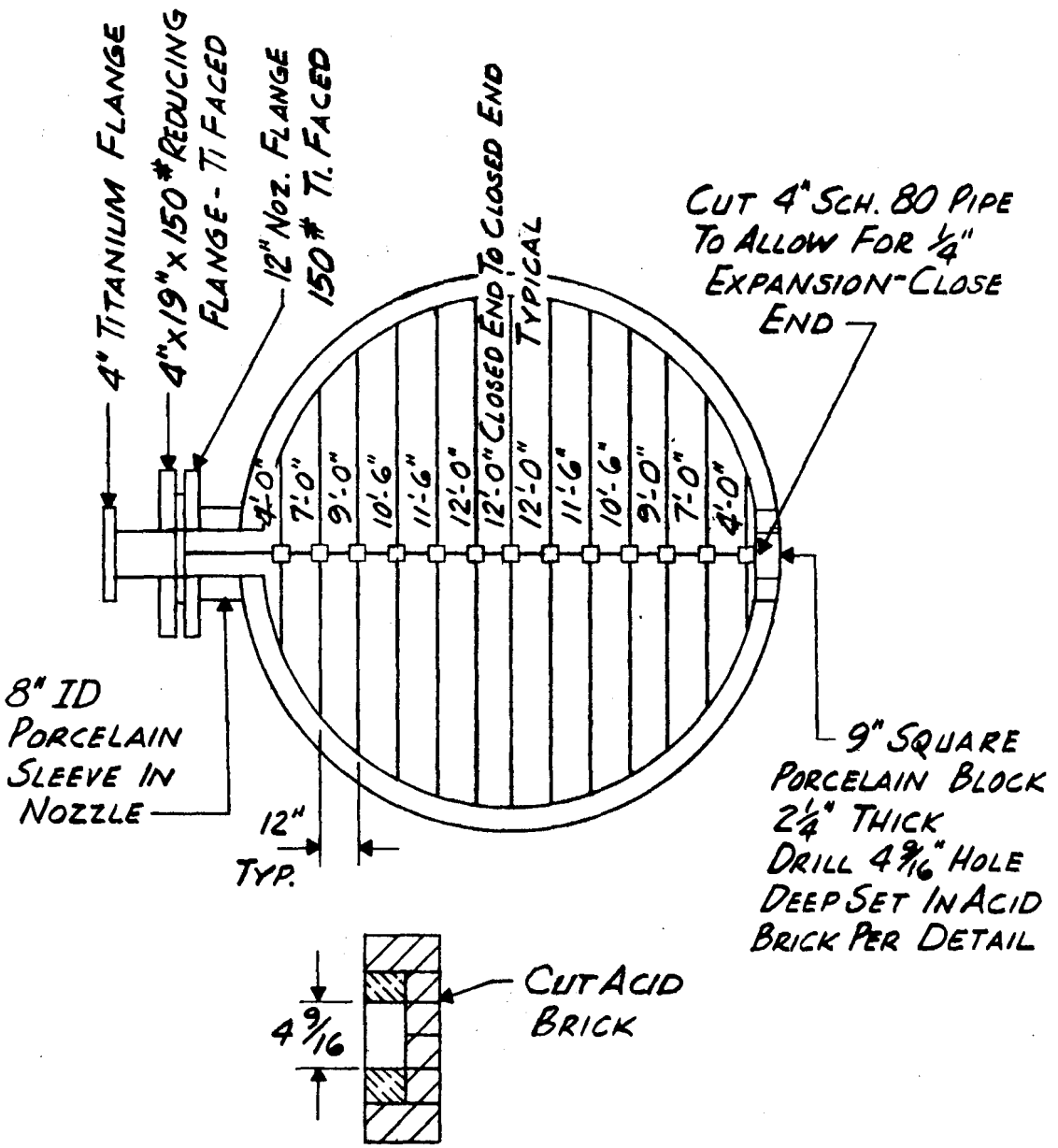

PORCELAIN BLOCK DETAIL

SPARGER PLAN

2 REQ'D. PER REACTOR

JOB Nº 730623

SPEC. Nº 200-R-1AK

SHT. Nº 3

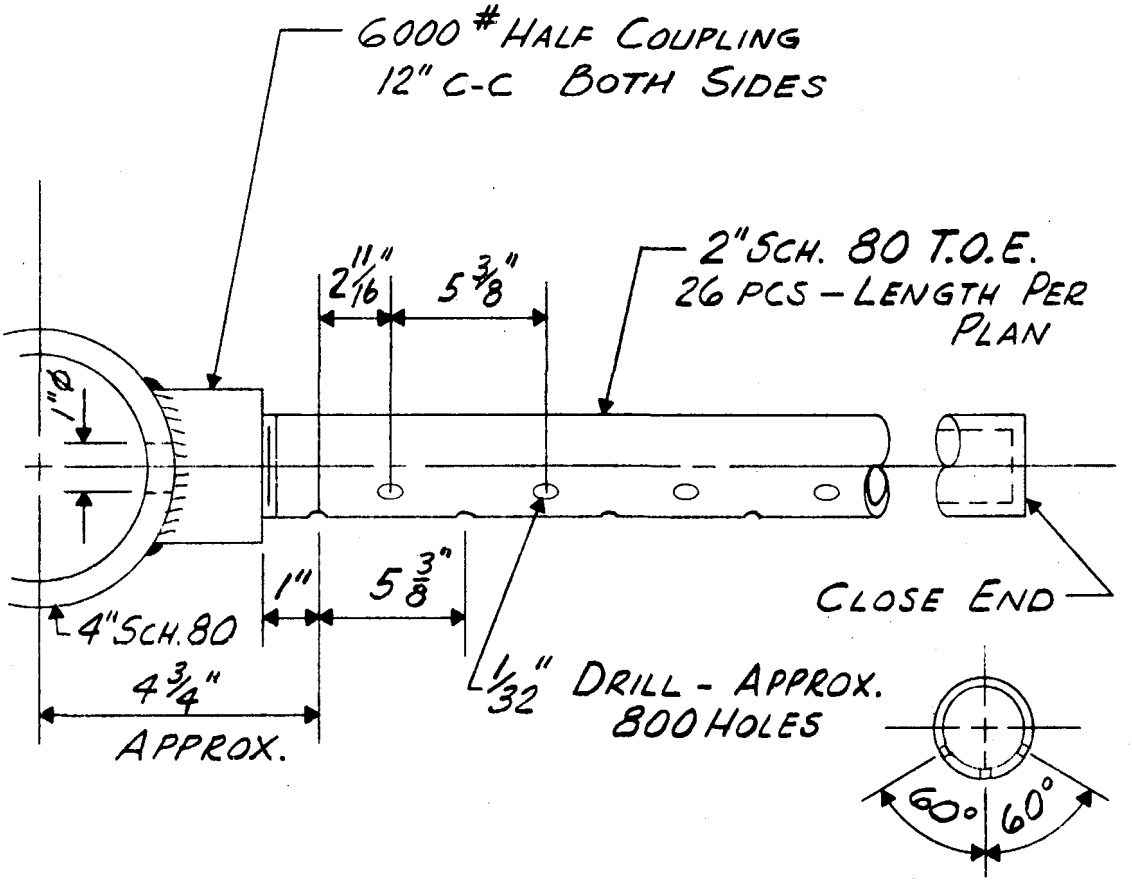

MATERIAL: TITANIUM

SPARGER DETAIL

JOB Nº 730623
SPEC. Nº R-200-R-1A-K
SHT. Nº 4

PLANT	Coal- Pyritic Sulfur Removal		FILE/JOB NO. 730623
LOCATION		BLDG. NO.	CHARGE NO.
MANUFACTURER	Dorr-Oliver	NO. UNITS 4 per Train	B/M NO.
			P. O. NO.
MODEL/TYPE	Rotary Drum (12'x22')	NO. UNITS OPERATING 4 per Train	SPARES None

OPERATIONAL PERFORMANCE

	DATA (Lime)		FEED (10)	FILTRATE (2)	BACKWASH	CAKE (15)
Fluid	(For 4 units)					
Flow-Process Basis		lb/hr	717000	440000	—	277000
Flow-Filter Basis		lb/hr				
Density		lb/cu ft	1.25 sp.gr.	1.18 sp.gr.		1.35 sp.gr.
Viscosity		centipoise				
pH						
Solids in Stream		vol.% wt.%	32			
Particle Size (Avg.)		microns	<100 Mesh			
Normal	Max. Oper. Press.	psig				
Normal	Max. Oper. Temp.	°F	215 / 215			
Allowable Pressure Drop		psi				

Maximum Cake Volume: Type Discharge: Wet Cake-Dry Cake

Cycle: Precoat Preparation Time None ; Precoating Time None

Filter Aid Preparation Time " ; Filter Aid Application Time "

Filtering Time Continuous ; Blowdown Time "

Cleaning/Backwash Time

Total Time Between Successive Filter Cycles Continuous

Instrumentation: Manual-Semi Automatic-Automatic

DESIGN

		Filter Shell	Feeder Tank	Filtrate Tank	Code:
Design Pressure	psig				Stamp Required: Yes - No
Design Temperature	°F				Radiograph:
Hydrostatic Test	psig				Stress Relieve:
Corr. Allow./Lin.-Shell	Heads in.				Special Design: Neoprene Covered
Joint Efficiency-Shell	Heads %				Polypropylene Cloth
Insulation					National Board No.

Electrical Construction: Standard Open ; Weatherproof ; Explosion Proof

Other:

Piping, Valves, Fittings Supplied with Filter to be in Accordance with:

CONSTRUCTION DETAILS

Filter Tank: Horizontal - Vertical: Size in. IDx in. Tan to Tan; Type Heads

Elements: Area/Element sq ft; No. Req'd ; in. IDx in. ODx in. Length

Leaves: Area/Leaf sq ft; No. Req'd ; Leaf Height in.; Leaf Spacing in.

Element or Leaf Pore Size (Avg.) microns; Minimum Particle Size Retained microns

Maximum Cake Thickness in; Gross Filter Volume gal-cu ft; Heel Volume gal - cu ft

Precoat Req'd: Yes - No Material

Filteroid Req'd: Yes - No Material Filter Fabric: Material Polypropylene Mesh

Feed Pump Furnished by Owner ; Make ; Model ; Max. Flow gpm at psig

Mat'l (Wetted Parts) ; Type Seal ; See Pump Spec No. 6 Drum Speed Control

Other Accessories: Vac Pump, Filtrate Rec. Pump w/Level Control, High & Low Pan Level Switches

Package Unit Yes - No; Shop Assembled on Skids Yes - No; Floor Space Req'd ft x ft; Height ft

Weight Empty/Full of Water / lb; Shipping Weight lb.

NOZZLE SCHEDULE

Service	Mark	No.	Size	Rtg.	Face	Type
Inlet	A					
Outlet	B					
Vent	C					
Drain	D					
Relief Valve	E					
Pressure Gage	F					
Quick Open Cover	G					
	H					
	J					
	K					

See Nozzle Sketch on Sheet No.

MATERIALS

Item	Thickness	Mat'l Class	Mat'l-Minimum Quality
Filter Heads	in.		
Filter Shell	in.		
Lining	in.		Neoprene
	in.		
Elements			
Leaves			
M.H. Cover			
Bolts/Studs			
Nuts			
Gaskets			

SPEC. BY EFH	THE DOW CHEMICAL COMPANY	400	EQUIP. NO. F-1A-D
CHECKED:	SERVICE FILTER	FILTER SPECIFICATIONS	
APP'D:			
DATE: 2/8/74	REVISION DATE A B C	SPEC. NO.	
VENDOR TO COMPLETE ALL INFORMATION MARKED	SHEET OF		

28660 3-68

PLANT Coal-Pyritic Sulfur Removal			FILE/JOB NO. 730623
LOCATION	BLDG. NO.		CHARGE NO.
MANUFACTURER	NO. UNITS 1 per Train		B/M NO.
			P. O. NO.

TYPE

Screw Conveyor

DESIGN CONDITIONS

To Receive Filter cake from 400F-1A-D (4 Filters) 35 Tons/hr each and discharge by gravity to 500-V-1

SPECIFICATIONS

All parts in contact with cake to be Neoprene lined or covered

Furnish with drive & motor for 440V 60Cy 3Ph. TEFC

Approximate Length 60 feet.

SPEC. BY EFH	THE DOW CHEMICAL COMPANY	400	EQUIP. NO. ME-1
CHECKED:	SERVICE CONVEYOR	MISCELLANEOUS EQUIPMENT SPECIFICATIONS	
APP'D:			
DATE: 2/8/74	REVISION DATE A B C	SPEC. NO.	
VENDOR TO COMPLETE ALL INFORMATION MARKED	SHEET OF		

25260 3-68

PLANT Coal-Pyritic Sulfur Removal			FILE/JOB NO. 730623
LOCATION	BLDG. NO.		CHARGE NO.
MANUFACTURER	NO. UNITS 1 per Train		B/M NO.
			P. O. NO.

OPERATING CONDITIONS

1. Mounting: Portable - Permanent for Open Tank - Side Entering - (Top Entering) Bottom Entering
2. Type of Operation: Batch - (Continuous) Operating Pressure 14.7 psia Operating Temperature °F 160

3 Materials to Be Mixed	State	Lb per - hr	Viscosity - cp	Spec. Grav.	°F
4 Coal & FeS_2	Solid	227780		1.37	160
5 Aqueous Sulfates	Liquid	46219		1.385	160
6 Solvent & Sulfur	Liquid	282880		0.686	160
7					
8					
9					
10 Final Mixture	Slurry	556879		1.07	160

11. Solids Present Are: (Soluble) (Insoluble) (Abrasive) Crystalline - Sticky or Gummy - Light or Fluffy
12. Particle Size or Sieve Analysis: 100 Mesh (topsize)
13. Settling Rate of Solids: Very Slow
14. Foaming Tendency of Mixture: Low - Medium - High No
15. Class of Agitation: (Blend) (Dissolve) Disperse Gas - (Suspend Solids) Heat Transfer - Emulsify
16. Other: Extract elemental Sulfur
17. Degree of Agitation: Mild (Medium) Violent
18. Too Much Agitation Will Take excessive power
19. Too Little Agitation Will Not extract sulfur
20. Largest Batch or Greatest Liquid Depth:
21. Smallest Batch or Lowest Liquid Depth:
22. Mixer Shall Be Designed to in Minutes
23. Mixer Will - Will (Not) Be operated While Filling or Drawing Off
24. Past Experience: None
25.

TANK & INSTALLATION DATA

26. Vessel Type: Open Top - (Closed Top) - Horizontal (Vertical) API Tank - Other:
27. Size: 13' ID by 39' Straight Side or in. Length
28. Bottom Type: Flat - Flanged & Dished - 2:1 Semi Elliptical (Cone) 45°
29. Top Type: Flat - (Flanged & Dished) - 2:1 Semi Elliptical - Cone
30. Vessel Can Be Altered: (Yes) No; Describe
31. Design Pressure 0 psig; Design Temperature 200 °F
32. Dow Drawing No. None ; Copies Attached: Yes (No)
33. Size of Opening for Impeller Installation ; Size of Nozzle for Mounting Agitator As Req'd
34. Selected Mounting Flange for Agitator: Size ; Rating ; Facing
35. Location of Mounting Flange:
36. Baffles: No. ; Width in.; Length in.; Horizontal - Vertical; Other: As Recommended
37. Stabilizing Ring Is - Is Not Required; Size
38. Shaft Seal: Mechanical - (Packing) - Other: ; Type Lubrication Water
39. Special Requirements:
40. Step Bearing Is - (Is Not) ~~Permissible~~ Preferable Head Room Available for Installing Mixer: Yes
41. Materials of Construction for Wetted Parts: 304

MIXER & DRIVER DATA

42. Mixer Model No. Driver Supplied by ; Gear Supplied by
43. Motor Drive: Mfgr. ; Speed rpm; Horsepower 50 hp; Enclosure TEFC
44. NEMA Frame ; Volts ; Phase ; Cycles
45. Turbine Drive: Mfgr. ; Speed rpm; Horsepower hp; Water Rate lb/hr
46. Inlet Steam: Pressure psig at °F
47. Exhaust Steam: Pressure psia - psig at °F
48. Other:
49. Gear: Mfgr. ; Ratio ; AGMA Rating ; Output Speed rpm
50. Shaft Coupling: Describe
51. Mechanical Seal: Describe
52. Stuffing Box: Describe
53. Shaft: Size in. OD by Length from Mounting Flange
54. Impeller: Type ; Size in. OD: No. Blades ; Removable from Shaft: Yes - No
55. Additional Data:

SPEC. BY EFH	DOW THE DOW CHEMICAL COMPANY	500	EQUIP. NO. A-1
CHECKED:	SERVICE EXTRACTOR AGITATOR	AGITATOR OR MIXER SPECIFICATIONS	
APP'D:			
DATE: 2/8/74	REVISION DATE A B C	SPEC. NO.	
VENDOR TO COMPLETE ALL INFORMATION MARKED _____	SHEET OF		

26040 3-681

PLANT Coal- Pyritic Sulfur Removal			FILE/JOB NO. 730625
LOCATION	BLDG. NO.		CHARGE NO.
MANUFACTURER	NO. UNITS 1 per Train		B/M NO.
			P. O. NO.
FIELD ERECTED (YES) NO	NO. UNITS 1	TOTAL VOLUME 40,000 GAL	

1	DESIGN DATA	Operating Pressure psig	0
2		Operating Temperature °F	160
3		Liquid Specific Gravity	1.07 (Slurry)
4		Contents Lethal	Yes (No)
5		Design Pressure psig	Atm
6		Design Temperature °F	200
7			
8			
9		Hydrostatic Test psig	10
10		Shell / Heads Corr. Allow. in.	
11		Shell / Heads Joint Eff. %	
12		Code: ASME	Stamp Yes (No)
13		Radiograph: NO	Stress Relieve: NO
14		National Board No.	
15		Type Supports:	Skirt
16		Insulation:	1"
17		Fireproofing:	Yes
18		Sandblast: NO	Paint: NO
19		Manhole 2 Hinged (Davited) Other:	
20		Platform Clips: NO / Ladder Clips: NO	Insul. Rings: Yes
21		Pipe Supports:	
22		Wind Load:	Seismic:
23		Wt. Empty lb	Wt Full of Water lb

		Item	Thickness	Mat'l Class	Mat'l - Minimum Quality
24	MATERIALS				
25		Shell	in.		304
26		Heads	in.		304
27		Lining	in.		
28			in.		
29			in.		
30		Nozzle Necks			304
31		Flanges			304 Faced
32		Coupling			
33		M.H. Cover			304 Faced
34		Supports			Steel
35		Bolts/Studs			
36		Nuts			
37		Gaskets			

		Service	Mark	No.	Size	Rating	Face	Type
38	NOZZLE SCHEDULE							
39		Coke Inlet	A	1	6	To match		400-ME-1
40		Agitator	B	1	8	"	"	100-A-1
41		Vent	C	1	2"	150#	RF	
42		LT	D	2	2"	"	"	
43		Outlet	E	1	8"	"	"	
44		Inlet	F	1	8"	"	"	
45			G					
46			H					
47			J					
48			K					
49			L					
50			M					
51			N					
52			P					
53			Q					
54			R					
55		*Nozzle to be Plugged or Blinded						

VESSEL SKETCH

13'-0" OD
39'-0" Straight Side
Dished Top
Cone Bottom 45°
Skirt 13' to top of cone

For Further Details, See Sheet No.

SPEC. BY EFH	THE DOW CHEMICAL COMPANY	500	EQUIP. NO. V-1
CHECKED:	SERVICE EXTRACTOR	VERTICAL VESSEL SPECIFICATIONS	
APP'D:			
DATE: 2/8/74	REVISION DATE A B C	SPEC. NO.	
VENDOR TO COMPLETE ALL INFORMATION MARKED	SHEET OF		

25840 3-68

PLANT	Coal- Pyritic Sulfur Removal		FILE/JOB NO. 730623
LOCATION		BLDG. NO.	CHARGE NO.
MANUFACTURER	Dorr-oliver	NO. UNITS 4 per Train	B/M NO.
			P. O. NO.
MODEL/TYPE	Rotary Drum (12'x22')	NO. UNITS OPERATING 4	SPARES None

OPERATIONAL PERFORMANCE

	DATA (Line)	FEED (27)	FILTRATE (30)	BACKWASH —	CAKE (29)
Fluid	(For 4 Units)				
Flow-Process Basis	lb/hr	557000	284000	—	273000
Flow-Filter Basis	lb/hr				
Density	lb/cu ft	1.075 sp gr	0.7 sp gr		
Viscosity	centipoise				
pH					
Solids in Stream	vol.% (wt.%)	41			
Particle Size (Avg.)	microns				
Normal Max. Oper. Press.	psig				
Normal Max. Oper. Temp.	°F	160 / 160	160 / 160		
Allowable Pressure Drop	psi				

Maximum Cake Volume: Type Discharge: Wet Cake-Dry Cake

Cycle: Precoat Preparation Time None ; Precoating Time None

Filter Aid Preparation Time ; Filter Aid Application Time

Filtering Time ; Blowdown Time

Cleaning/Backwash Time

Total Time Between Successive Filter Cycles continuous

Instrumentation: Manual-Semi Automatic-(Automatic)

DESIGN

	Filter Shell	Feeder Tank	Filtrate Tank	
Design Pressure psig				Code:
Design Temperature °F				Stamp Required: Yes - No
Hydrostatic Test psig				Radiograph:
Corr. Allow./Lin.-Shell / Heads in.				Stress Relieve:
Joint Efficiency-Shell / Heads %				Special Design:
Insulation				National Board No.

Electrical Construction: Standard Open Weatherproof (Explosion Proof)

Other:

Piping, Valves, Fittings Supplied with Filter to be in Accordance with:

CONSTRUCTION DETAILS

Filter Tank: Horizontal - Vertical: Size in. IDx in. Tan to Tan; Type Heads

Elements: Area/Element sq ft; No. Req'd ; in. IDx in. ODx in. Length

Leaves: Area/Leaf sq ft; No. Req'd ; Leaf Height in.; Leaf Spacing in.

Element or Leaf Pore Size (Avg.) microns; Minimum Particle Size Retained microns

Maximum Cake Thickness in; Gross Filter Volume gal-cu ft; Heel Volume gal - cu ft

Precoat Req'd: Yes - (No) Material

Filteraid Req'd: Yes - (No) Material Filter Fabric: Material 304 ; Mesh

Feed Pump Furnished by Owner ; Make ; Model ; Max. Flow gpm at psig

Mat'l (Wetted Parts) ; Type Seal ; See Pump Spec No. Drum: Speed Control

Other Accessories: Vac Pump, Receiver, Dump, Level Control, H&L Pan Level Switches,

Package Unit. Yes - No; Shop Assembled on Skids Yes - No; Floor Space Req'd ft x ft; Height ft

Weight Empty/Full of Water / lb; Shipping Weight lb.

NOZZLE SCHEDULE

Service	Mark	No.	Size	Rtg.	Face	Type
Inlet	A					
Outlet	B					
Vent	C					
Drain	D					
Relief Valve	E					
Pressure Gage	F					
Quick Open Cover	G					
	H					
	J					
	K					

See Nozzle Sketch on Sheet No.

MATERIALS

Item	Thickness	Mat'l Class	Mat'l-Minimum Quality
Filter Heads	in.		304
Filter Shell	in.		304
Lining	in.		304
	in.		
Elements			
Leaves			
M.H. Cover			
Bolts/Studs			
Nuts			
Gaskets			

SPEC. BY EFH	THE DOW CHEMICAL COMPANY	600 — EQUIP. NO. F-1A-D
CHECKED:	SERVICE FILTER	FILTER SPECIFICATIONS
APP'D:		
DATE: 2/8/74	REVISION DATE A B C	SPEC. NO.
VENDOR TO COMPLETE ALL INFORMATION MARKED _____	SHEET OF	

25660 3-68

PLANT Coal. Pyritic Sulfur Removal			FILE/JOB NO. 730623
LOCATION	BLDG. NO.		CHARGE NO.
MANUFACTURER	NO. UNITS 1 per Train		B/M NO.
			P. O. NO.

1	TYPE	Screw Conveyor
2		
3		
4		
5		
6		
7	DESIGN CONDITIONS	To receive Filter Cake from 600-F-1A-D (4 Filters)
8		35 Tons/hr each and discharge by gravity
9		to 700-V-1
10		
11		
12		
13		
14		
15	SPECIFICATIONS	All parts in contact with cake to be
16		304 Stainless Steel
17		
18		Furnish with drive & Motor for 440V 60cy 3 Ph
19		Explosion proof.
20		
21		Approximate length 60 feet
22		
23		
24		
25		
26		
27		
28		
29		
30		
31		
32		
33		
34		
35		
36		
37		
38		
39		
40		
41		
42		
43		
44		
45		
46		
47		
48		
49		
50		

SPEC. BY EFH	DOW THE DOW CHEMICAL COMPANY	600	EQUIP. NO. ME-1
CHECKED:	SERVICE CONVEYOR	MISCELLANEOUS EQUIPMENT SPECIFICATIONS	
APP'D:			
DATE: 2/8/74	REVISION DATE A B C	SPEC. NO.	
VENDOR TO COMPLETE ALL INFORMATION MARKED.	SHEET OF		

25260 3-68

PLANT Coal- Pyritic Sulfur Removal			FILE/JOB NO. 730623
LOCATION	BLDG. NO.		CHARGE NO.
MANUFACTURER	NO. UNITS 2 per Train		B/M NO.
			P.O. NO.

MODEL 4+6-10 NO. UNITS 1 ASA PUMP ☒ YES ☐ NO ASA DESIGNATION

1	SERVICE CONDITIONS	Liquid Pumped Slurry	Max. Capacity at P.T. 1250 gpm		
2		Pumping Temperature (P.T.) 160 °F	Discharge Pressure psia 80 ft.		
3		Specific Gravity at P.T. 1.11	Suction Pressure psia 46 ft.		
4		Viscosity at P.T. cs-cp	Differential Pressure psi		
5		Vapor Pressure at P.T.	Differential Head 94 ft.		
6		Corrosion or Erosion Factors: Sulfates & Coal	NPSH Available ft.		
7			NPSH Required (Water) ft.		
8	CONSTRUCTION DETAILS	Arrangement: (Horiz.) Vert.-In Line	Suction: Single - Double		
9		Direction of Rotation Facing Pump Coupling: CW - CCW	Speed: 1750 rpm		
10		Case: Design Pressure psig	Number of Stages ;Shut-Off Pressure ft.		
11		Max. Allow. Working Press. psig	Volumetric Efficiency at Rating %		
12		Split: Horiz-Vert-Barrel	Impeller Type Open		
13		Impeller Diameter: Supplied 9" inches;	Maximum 10 inches; Minimum 8 inches		
14		Vent and Drain Tapped: Yes - No	Bearings: Thrust Type		
15		Nozzles / Size / Rating / Facing / Location	Radial Type		
16		Suction 4"	Lubrication on Bearings; Oil - Grease		
17		Discharge 6"	Oiler: Yes - No; Type		
18		Vents	Coupling: Yes - No; Mfr.		
19		Drains	Coupling Guard: Yes - No		
20		Cooling H_2O	Baseplate: Yes - No; Type		
21		Water Cooling: Casing-Stuff. Box-Bearings-Pedestal-Gland-(None)	Total Water Required: gpm		
22		Smothering Gland: Yes - No	Lubrication on Stuffing Box: Oil-Grease-None Water		
23		Packing: (Yes) No; Type	Sealing Oil Connection: (Yes) - No Water		
24		Mechanical Seal: Yes (No) Furnished by;	; Mfr. Type		
25		Single - Double-Inside-Outside-Balanced-Unbalanced			
26		Rotary Unit ; Seal Ring	; Face Material ; Shaft Packing		
27		Insert ; Reversible: Yes - No	; Face Material		
28		Insert Mounting: Clamped In - "O" Ring - Press Fit			
29		Gland ; Plain: Yes - No	Throttle Bushing Carbon: Yes - No ; Other		
30		Gland/Stuffing Box Machined & Tapped for: Dead - End Lub. - Circulating Lub. - Quenching - Vent & Drain			
31		Flushing Seal Faces with Discharge Bypass - Flushing Seal Faces with External Fluid			
32		Auxiliary Stuffing Box Req'd: Yes (No)			
33		Weight of Pump	lb; Weight of Base lb		
34		Weight of Driver	lb; Shipping Weight lb		
35	MATERIALS	Casing & Covers: 316	Shaft: Steel		
36		Casing Wear Rings: 316	Shaft Sleeves: 316		
37		Impeller: 316	Lantern Rings:		
38		Impeller Wear Rings: 316	Glands:		
39		Stuffing Box Bushings: 316	Gaskets:		
40	DRIVER	Furnished by: ; Type (Elec. Motor) - Steam Turbine - Other	(Direct) Gear - Belt		
41		Electric Motor: Make Mounted by Vendor	Steam Turbine: Make Mounted by		
42		Enclosure SF Temp Rise °C	Model:		
43		Insulation Frame	Horsepower hp ; Speed rpm		
44		Estimated BHP Req'd. 17 hp	Inlet Steam Press., psig: Normal ; Max		
45		Nominal Motor Size (Non-overloading) 25 hp	Inlet Steam Temp., °F: Normal ; Max.		
46		Speed rpm	Water Rate: lb/hr		
47		Volts 440 ; Phase 3 ; Cycle 60	Vacuum (If any) mm - in. Hg - psia		
48		Speed Reducer: Integral - Separate	Back Pressure psig		
49		Mfr. Ratio	Nozzles / Size / Rating / Facing / Location		
50		Model Class	Inlet		
51		See Driver Specification No.	Exhaust		
52	TESTS	Performance Curve: Yes - No; Curve No.	MISC. Serial Number		
53		Certified: Yes - No	Outline Drawing		
54		Hydrostatic Test: Yes - No; Pressure psig	Cross Section Drawing		
55		Shop Inspection: Yes - No	Bulletin No. Page No.		

SPEC. BY EFH	THE DOW CHEMICAL COMPANY	600	EQUIP. NO. P-1A/B
CHECKED:	SERVICE FILTER FEED PUMP	CENTRIFUGAL PUMP SPECIFICATIONS	
APP'D:			
DATE: 2/8/74	REVISION DATE A B C	SPEC. NO.	
VENDOR TO COMPLETE ALL INFORMATION MARKED _____	SHEET OF		

18370D 4/73

PLANT	Coal- Pyritic Sulfur Removal		FILE/JOB NO. 730623
LOCATION		BLDG. NO.	CHARGE NO.
MANUFACTURER		NO. UNITS 2 per Train	B/M NO.
			P.O. NO.

MODEL 1½x3-10 NO. UNITS 1 ASA PUMP [X] YES [ ] NO ASA DESIGNATION

1	SERVICE CONDITIONS	Liquid Pumped: Sulfates	Max. Capacity at P.T. 70 gpm	
2		Pumping Temperature (P.T.) 160 °F	Discharge Pressure 45 psia ft.	
3		Specific Gravity at P.T. 1.2	Suction Pressure 23 psia ft.	
4		Viscosity at P.T. cs-cp	Differential Pressure 22 psi	
5		Vapor Pressure at P.T.	Differential Head 43 ft.	
6		Corrosion or Erosion Factors:	NPSH Available ft.	
7			NPSH Required (Water) ft.	
8	CONSTRUCTION DETAILS	Arrangement: (Horiz.)-Vert.-In Line	Suction: Single - Double	
9		Direction of Rotation Facing Pump Coupling: CW - CCW	Speed: 1750 rpm	
10		Case: Design Pressure psig	Number of Stages ; Shut-Off Pressure ft.	
11		Max. Allow. Working Press. psig	Volumetric Efficiency at Rating %	
12		Split: Horiz-Vert-Barrel	Impeller Type	
13		Impeller Diameter: Supplied 6½ inches;	Maximum 10 inches; Minimum 6 inches	
14		Vent and Drain Tapped: Yes - No	Bearings: Thrust Type	
15		Nozzles / Size / Rating / Facing / Location	Radial Type	
16		Suction 3"	Lubrication on Bearings; Oil - Grease	
17		Discharge 1½"	Oiler: Yes - No; Type	
18		Vents	Coupling: Yes - No; Mfr.	
19		Drains	Coupling Guard: Yes - No	
20		Cooling H_2O	Baseplate: Yes - No; Type	
21		Water Cooling: Casing-Stuff. Box-Bearings-Pedestal-Gland-(None)	Total Water Required: gpm	
22		Smothering Gland: Yes - No	Lubrication on Stuffing Box: Oil-Grease-None Water	
23		Packing: (Yes) - No; Type	Sealing Oil Connection: Yes - No	
24		Mechanical Seal: Yes (No) Furnished by;	; Mfr. Type	
25		Single - Double-Inside-Outside-Balanced-Unbalanced		
26		Rotary Unit ; Seal Ring	; Face Material ; Shaft Packing	
27		Insert ; Reversible: Yes - No	; Face Material	
28		Insert Mounting: Clamped In - "O" Ring - Press Fit		
29		Gland ; Plain: Yes - No	Throttle Bushing Carbon: Yes - No ; Other	
30		Gland/Stuffing Box Machined & Tapped for: Dead - End Lub. - Circulating Lub. - Quenching - Vent & Drain		
31		Flushing Seal Faces with Discharge Bypass - Flushing Seal Faces with External Fluid		
32		Auxiliary Stuffing Box Req'd: Yes - No		
33		Weight of Pump lb; Weight of Base lb		
34		Weight of Driver lb; Shipping Weight lb		
35	MATERIALS	Casing & Covers: 316	Shaft: Steel	
36		Casing Wear Rings: "	Shaft Sleeves: 316	
37		Impeller: "	Lantern Rings:	
38		Impeller Wear Rings: "	Glands:	
39		Stuffing Box Bushings: "	Gaskets:	
40	DRIVER	Furnished by: Vendor ; Type (Elec. Motor) Steam Turbine - Other	; Direct - Gear - Belt	
41		Electric Motor: Make Mounted by Vendor	Steam Turbine: Make Mounted by	
42		Enclosure: TEFC SF Temp Rise °C	Model:	
43		Insulation Frame	Horsepower hp ; Speed rpm	
44		Estimated BHP Req'd. 3.6 hp	Inlet Steam Press., psig: Normal ; Max	
45		Nominal Motor Size (Non-overloading) 5 hp	Inlet Steam Temp., °F: Normal ; Max.	
46		Speed rpm	Water Rate: lb/hr	
47		Volts 440 ; Phase 3 ; Cycle 60	Vacuum (If any) mm - in. Hg - psia	
48		Speed Reducer: Integral - Separate	Back Pressure psig	
49		Mfr. Ratio	Nozzles / Size / Rating / Facing / Location	
50		Model Class	Inlet	
51		See Driver Specification No.	Exhaust	
52	TESTS	Performance Curve: (Yes) - No; Curve No.	MISC. Serial Number	
53		Certified: Yes (No)	Outline Drawing	
54		Hydrostatic Test: (Yes) - No; Pressure psig	Cross Section Drawing	
55		Shop Inspection: Yes (No)	Bulletin No. Page No.	

SPEC. BY EFH	DOW THE DOW CHEMICAL COMPANY	600	EQUIP. NO. P-2A-B
CHECKED:	SERVICE	CENTRIFUGAL PUMP SPECIFICATIONS	
APP'D:	AQUEOUS FORWARDING PUMP		
DATE: 2/5/74	REVISION DATE A B C	SPEC. NO.	
VENDOR TO COMPLETE ALL INFORMATION MARKED _____	SHEET OF		

18370D 4/73

PLANT	Coal - Pyritic Sulfur Removal		FILE/JOB NO. 730623
LOCATION		BLDG. NO.	CHARGE NO.
MANUFACTURER		NO. UNITS 1 per Train	B/M NO.
			P. O. NO.

FIELD ERECTED YES (NO) | NO. UNITS 1 | TOTAL VOLUME 18000 GAL

DESIGN DATA

1	Operating Pressure psig	0
2	Operating Temperature °F	200
3	Liquid Specific Gravity	1.2 & 0.67
4	Contents Lethal	Yes (No)
5	Design Pressure psig	25
6	Design Temperature °F	250
7		
8		
9	Hydrostatic Test psig	40
10	Shell / Heads Corr. Allow. in.	
11	Shell / Heads Joint Eff. %	
12	Code: ASME	Stamp Yes (No)
13	Radiograph: No	Stress Relieve: NO
14	National Board No.	
15	Type Supports: Lugs	
16	Insulation: 1"	
17	Fireproofing: Yes	
18	Sandblast: No	Paint: NO
19	Manhole 1 Hinged (Davited)	Other:
20	Platform Clips: No / Ladder Clips: NO	Insul. Rings: Yes
21	Pipe Supports:	
22	Wind Load:	Seismic:
23	Wt. Empty lb	Wt Full of Water lb

MATERIALS

	Item	Thickness	Mat'l Class	Mat'l - Minimum Quality
24				
25	Shell	in.		Steel
26	Heads	in.		"
27	Lining	in.		Ceilcote #64
28		in.		
29		in.		
30	Nozzle Necks			Ceilcote Lined
31	Flanges			" Faced
32	Coupling			None
33	M.H. Cover			Ceilcote Faced
34	Supports			Steel
35	Bolts/Studs			
36	Nuts			
37	Gaskets			

NOZZLE SCHEDULE

38	Service	Mark	No.	Size	Rating	Face	Type
39	In (30)	A	1	8"	150#	FF	
40	LS	B	1	6"	"	"	
41	Vent (202)	C	1	2"	"	"	
42	Org out (38)	D	1	12"	"	"	
43	LT	E	2	2"	"	"	
44	Aq out (32)	F	1	4"	"	"	
45		G					
46		H					
47		J					
48		K					
49		L					
50		M					
51		N					
52		P					
53		Q					
54		R					

55 *Nozzle to be Plugged or Blinded

VESSEL SKETCH

11'6" Dia x 23' BL-BL
F&D Heads
Vertical

For Further Details, See Sheet No.

SPEC. BY EFH	THE DOW CHEMICAL COMPANY	600	EQUIP. NO. D-1
CHECKED:	SERVICE DECANTER	VERTICAL VESSEL SPECIFICATIONS	
APP'D:			
DATE: 2/8/74	REVISION DATE A B C	SPEC. NO.	
VENDOR TO COMPLETE ALL INFORMATION MARKED _____	SHEET OF		

25840 3-68

PLANT Coal - Pyritic Sulfur Removal			FILE/JOB NO. 730623
LOCATION	BLDG. NO.		CHARGE NO.
MANUFACTURER	NO. UNITS 1 per Train		B/M NO.
			P. O. NO.

OPERATING CONDITIONS

1. Mounting: Portable - Permanent for Open Tank - Side Entering - (Top Entering) Bottom Entering
2. Type of Operation: Batch (Continuous) Operating Pressure 14.7 psia Operating Temperature °F 200

3 Materials to Be Mixed	State	Lb per - hr	Viscosity - cp	Spec. Grav.	°F
4 Pyrite FeS2	Solid	227780		1.37	200
5 Ferric & Ferrous Sulfates	Liquid	294812		1.02	200
6 Solvent & Sulfur	"	49892		0.68	200
7					
8					
9					
10 Final Mixture				1.14	200

11. Solids Present Are: (Soluble) (Insoluble) (Abrasive) - Crystalline - Sticky or Gummy - Light or Fluffy
12. Particle Size or Sieve Analysis: 100 mesh (Top size)
13. Settling Rate of Solids: Slow
14. Foaming Tendency of Mixture: Low - Medium - High NO
15. Class of Agitation: (Blend) - Dissolve - Disperse Gas - (Suspend Solids) - Heat Transfer - Emulsify
16. Other: Wash Solids
17. Degree of Agitation: Mild (Medium) Violent
18. Too Much Agitation Will Take excessive power
19. Too Little Agitation Will not wash properly
20. Largest Batch or Greatest Liquid Depth:
21. Smallest Batch or Lowest Liquid Depth:
22. Mixer Shall Be Designed to in Minutes
23. Mixer Will - Will (Not) Be operated While Filling or Drawing Off
24. Past Experience: None
25.

TANK & INSTALLATION DATA

26. Vessel Type: Open Top - (Closed Top) Horizontal - (Vertical) API Tank - Other:
27. Size: 14'-9" in. ID by 39'-4" in. Straight Side or in. Length
28. Bottom Type: Flat - Flanged & Dished - 2:1 Semi Elliptical - (Cone) 45°
29. Top Type: Flat - (Flanged & Dished) - 2:1 Semi Elliptical - Cone
30. Vessel Can Be Altered: (Yes) No; Describe
31. Design Pressure 0 psig; Design Temperature 250 °F
32. Dow Drawing No. None ; Copies Attached: Yes - (No)
33. Size of Opening for Impeller Installation 20" MH; Size of Nozzle for Mounting Agitator As Req'd
34. Selected Mounting Flange for Agitator: Size ; Rating ; Facing
35. Location of Mounting Flange:
36. Baffles: No. ; Width in.; Length in.; Horizontal - Vertical; Other: as recommended
37. Stabilizing Ring Is - Is Not Required; Size
38. Shaft Seal: Mechanical (Packing) - Other: ; Type Lubrication Water
39. Special Requirements:
40. Step Bearing Is - (Is Not) ~~Permissible~~ preferable Head Room Available for Installing Mixer: Yes
41. Materials of Construction for Wetted Parts: 304

MIXER & DRIVER DATA

42. Mixer Model No. Driver Supplied by Vendor; Gear Supplied by Vendor
43. Motor Drive: Mfgr. ; Speed rpm; Horsepower 100 hp; Enclosure TEFC
44. NEMA Frame ; Volts 440 ; Phase 3 ; Cycles 60
45. Turbine Drive: Mfgr. ; Speed rpm; Horsepower hp; Water Rate lb/hr
46. Inlet Steam: Pressure psig at °F
47. Exhaust Steam: Pressure psia - psig at °F
48. Other:
49. Gear: Mfgr. ; Ratio ; AGMA Rating ; Output Speed rpm
50. Shaft Coupling: Describe
51. Mechanical Seal: Describe
52. Stuffing Box: Describe
53. Shaft: Size in. OD by Length from Mounting Flange
54. Impeller: Type ; Size in. OD: No. Blades ; Removable from Shaft: Yes - No
55. Additional Data:

SPEC. BY EFH	THE DOW CHEMICAL COMPANY	700	EQUIP. NO. A-1
CHECKED:	SERVICE WATER WASH TANK AGITATOR	AGITATOR OR MIXER SPECIFICATIONS	
APP'D:			
DATE: 2/8/74	REVISION DATE A B C	SPEC. NO.	
VENDOR TO COMPLETE ALL INFORMATION MARKED _____	SHEET OF		

26040 3-681

PLANT Coal-Pyritic Sulfur Removal			FILE/JOB NO. 730623
LOCATION	BLDG. NO.		CHARGE NO.
MANUFACTURER	NO. UNITS 1 per Train		B/M NO.
			P. O. NO.

FIELD ERECTED (YES) NO | NO. UNITS 1 | TOTAL VOLUME 50,000 GAL

1	DESIGN DATA	Operating Pressure psig	0
2		Operating Temperature °F	200
3		Liquid Specific Gravity	(Slurry) 1.14
4		Contents Lethal	Yes (No)
5		Design Pressure psig	Atm
6		Design Temperature °F	250
7			
8			
9		Hydrostatic Test psig	10
10		Shell / Heads Corr. Allow. in.	
11		Shell / Heads Joint Eff. %	
12		Code: ASME	Stamp Yes (No)
13		Radiograph: No	Stress Relieve: No
14		National Board No.	
15		Type Supports: Skirt	
16		Insulation: 1"	
17		Fireproofing: Yes	
18		Sandblast: No	Paint: No
19		Manhole 2 Hinged (Davited)	Other:
20		Platform Clips: No	Ladder Clips: No / Insul. Rings: Yes
21		Pipe Supports:	
22		Wind Load:	Seismic:
23		Wt. Empty lb	Wt Full of Water lb

		Item	Thickness	Mat'l Class	Mat'l - Minimum Quality
24	MATERIALS				
25		Shell	in.		304
26		Heads	in.		304
27		Lining	in.		
28			in.		
29			in.		
30		Nozzle Necks			304
31		Flanges			304 Faced
32		Coupling			
33		M.H. Cover			304 Faced
34		Supports			Steel
35		Bolts/Studs			
36		Nuts			
37		Gaskets			

		Service	Mark	No.	Size	Rating	Face	Type
38	NOZZLE SCHEDULE							
39		Cake In (29)	A	1	8	To match		600-ME-1
40		Agitator	B	1	8	"	"	100-A-1
41		Vent (203)	C	1	2"	150#	RF	
42		LT	D	2	2"	"	"	
43		Outlet (39)	E	1	8"	"	"	
44		Inlet (44)	F	1	8"	"	"	
45			G					
46			H					
47			J					
48			K					
49			L					
50			M					
51			N					
52			P					
53			Q					
54			R					
55		*Nozzle to be Plugged or Blinded						

VESSEL SKETCH

14'-9" Diameter
39'-4" Straight Side
Dished Top
Cone Bottom (45°)
Skirt Support
13' to top of Cone

For Further Details, See Sheet No.

SPEC. BY EFH	DOW THE DOW CHEMICAL COMPANY	700	EQUIP. NO. V-1
CHECKED:	SERVICE WATER WASH TANK	VERTICAL VESSEL SPECIFICATIONS	
APP'D:			
DATE: 2/8/74	REVISION DATE A B C	SPEC. NO.	
VENDOR TO COMPLETE ALL INFORMATION MARKED _____	SHEET OF		

2BA40 3-68

PLANT	Coal- Pyritic Sulfur Removal		FILE/JOB NO. 73C623
LOCATION		BLDG. NO.	CHARGE NO.
MANUFACTURER	Dorr-Oliver	NO. UNITS 4 per Train	B/M NO.
			P. O. NO.
MODEL/TYPE	Rotary Drum (12'x22')	NO. UNITS OPERATING 4	SPARES None

OPERATIONAL PERFORMANCE

	DATA (Line)	FEED (37)	FILTRAT (42)	BACKWASH (47)	CAKE (45)
2	Fluid	Slurry	Sulfates	Water	Coal
3	Flow-Process Basis lb/hr	566000	285000	80400	276174
4	Flow-Filter Basis lb/hr				
5	Density lb/cu ft	1.155 sp gr	1.0 + sp gr	1.0 sp gr	
6	Viscosity centipoise				
7	pH				
8	Solids in Stream vol.% (wt.%)	40			
9	Particle Size (Avg.) microns	<100 Mesh			
10	Normal / Max. Oper. Press. psig				
11	Normal / Max. Oper. Temp. °F	200 / 200			
12	Allowable Pressure Drop psi				
13					

14 Maximum Cake Volume: Type Discharge: Wet Cake (Dry Cake)

15 Cycle: Precoat Preparation Time None ; Precoating Time None

16 Filter Aid Preparation Time ; Filter Aid Application Time

17 Filtering Time ; Blowdown Time

18 Cleaning/Backwash Time

19 Total Time Between Successive Filter Cycles Continuous

20 Instrumentation: Manual-Semi Automatic-Automatic

DESIGN

		Filter Shell	Feeder Tank	Filtrate Tank	Code:
22	Design Pressure psig				Stamp Required: Yes - No
23	Design Temperature °F				Radiograph:
24	Hydrostatic Test psig				Stress Relieve:
25	Corr. Allow./Lin.-Shell / Heads in.				Special Design:
26	Joint Efficiency-Shell / Heads %				
27	Insulation				National Board No.

28 Electrical Construction: Standard Open Weatherproof (Explosion Proof)

29 Other:

30 Piping, Valves, Fittings Supplied with Filter to be in Accordance with:

31

CONSTRUCTION DETAILS

32 Filter Tank: Horizontal - Vertical: Size in. IDx in. Tan to Tan; Type Heads

33 Elements: Area/Element sq ft; No. Req'd ; in. IDx in. ODx in. Length

34 Leaves: Area/Leaf sq ft; No. Req'd ; Leaf Height in.; Leaf Spacing in.

35 Element or Leaf Pore Size (Avg.) microns; Minimum Particle Size Retained microns

36 Maximum Cake Thickness in; Gross Filter Volume gal-cu ft; Heel Volume gal - cu ft

37 Precoat Req'd: Yes - (No) Material

38 Filteraid Req'd: Yes - (No) Material Filter Fabric: Material 304 ; Mesh

39 Feed Pump Furnished by Owner ; Make ; Model ; Max. Flow gpm at psig

40 Mat'l (Wetted Parts) ; Type Seal ; See Pump Spec No.

41 Other Accessories Vac Pump, Filtrate & Wash Receivers, Pumps, Level Controllers, Drum Speed Control

42 Package Unit Yes - No; Shop Assembled on Skids Yes - No; Floor Space Req'd ft x ft; Height

43 Weight Empty/Full of Water / lb; Shipping Weight

NOZZLE SCHEDULE

	Service	Mark	No.	Size	Rtg.	Face	Type
44							
45	Inlet	A					
46	Outlet	B					
47	Vent	C					
48	Drain	D					
49	Relief Valve	E					
50	Pressure Gage	F					
51	Quick Open Cover	G					
52		H					
53		J					
54		K					
55	See Nozzle Sketch on Sheet No.						

MATERIALS

Item	Thickness	Mat'l Class	Mat'l-Minimum Quality
Filter Heads	in.		304
Filter Shell	in.		304
Lining	in.		304
	in.		
Elements			
Leaves			
M.H. Cover			
Bolts/Studs			
Nuts			
Gaskets			

SPEC. BY EFH	DOW THE DOW CHEMICAL COMPANY	800	EQUIP. NO. F-1A-D
CHECKED:	SERVICE FILTER	FILTER SPECIFICATIONS	
APP'D:			
DATE: 2/8/74	REVISION DATE A B C	SPEC. NO.	
VENDOR TO COMPLETE ALL INFORMATION MARKED	SHEET OF		

25660 3-68

PLANT Coal- Pyritic Sulfur Removal	FILE/JOB NO. 730623
LOCATION BLDG. NO.	CHARGE NO.
MANUFACTURER NO. UNITS 1 per Train	B/M NO.
	P. O. NO.

TYPE

Screw Conveyor

DESIGN CONDITIONS

To receive Filter Cake from 800-F-1A-D (4 Filters)
35 Tons/hr each and discharge by gravity to
two dryer air-lock feeders on 900-ME-1A&B

Three conveyors probably Required
1- 48' long from F1-A-D Center discharge
1- 40' long from 48' to center inlet
1- 40' long to ME-1A&B Discharge each end.

SPECIFICATIONS

All parts in contact with cake to be
304 Stainless Steel

Furnish with drives & motors 440V 60cy 3Ph
TEFC

SPEC. BY EFH	THE DOW CHEMICAL COMPANY	800	EQUIP. NO. ME-1
CHECKED:	SERVICE CONVEYOR	MISCELLANEOUS EQUIPMENT SPECIFICATIONS	
APP'D:			
DATE: 2/8/74	REVISION DATE A B C	SPEC. NO.	
VENDOR TO COMPLETE ALL INFORMATION MARKED	SHEET OF		

25260 3-68

PLANT	Coal - Pyritic Sulfur Removal		FILE/JOB NO. 730623
LOCATION		BLDG. NO.	CHARGE NO.
MANUFACTURER		NO. UNITS 2 per train	B/M NO.
			P.O. NO.

MODEL 4x6-13 NO. UNITS ASA PUMP [X] YES [ ] NO ASA DESIGNATION

1	SERVICE CONDITIONS	Liquid Pumped: Slurry	Max. Capacity at P.T.	1000	gpm
2		Pumping Temperature (P.T.) 200 °F	Discharge Pressure psia	73	ft.
3		Specific Gravity at P.T. 1.15	Suction Pressure psia	48	ft.
4		Viscosity at P.T. cs-cp	Differential Pressure psi		
5		Vapor Pressure at P.T.	Differential Head	25	ft.
6		Corrosion or Erosion Factors: Coal slurry	NPSH Available		ft.
7			NPSH Required (Water)		ft.
8	CONSTRUCTION DETAILS	Arrangement: (Horiz.) Vert.-In Line	Suction (Single) Double		
9		Direction of Rotation Facing Pump Coupling: CW - CCW	Speed: 1150		rpm
10		Case: Design Pressure psig	Number of Stages 1 ; Shut-Off Pressure		ft.
11		Max. Allow. Working Press. psig	Volumetric Efficiency at Rating		%
12		Split: Horiz-Vert-Barrel	Impeller Type		
13		Impeller Diameter: Supplied 11 1/2 inches;	Maximum 13 inches; Minimum 9		inches
14		Vent and Drain Tapped: Yes - No	Bearings: Thrust Type		
15		Nozzles / Size / Rating / Facing / Location	Radial Type		
16		Suction 6"	Lubrication on Bearings; Oil - Grease		
17		Discharge 4"	Oiler: Yes - No; Type		
18		Vents	Coupling: Yes - No; Mfr.		
19		Drains	Coupling Guard: Yes - No		
20		Cooling H_2O	Baseplate: Yes - No; Type		
21		Water Cooling: Casing-Stuff. Box-Bearings-Pedestal-Gland (None)	Total Water Required:		gpm
22		Smothering Gland: Yes - (No)	Lubrication on Stuffing Box: Oil-Grease-None Water		
23		Packing: (Yes) No; Type	Sealing Oil Connection: (Yes) No		
24		Mechanical Seal: Yes - No; Furnished by;	; Mfr. Type		
25		Single - Double-Inside-Outside-Balanced-Unbalanced			
26		Rotary Unit ; Seal Ring	; Face Material ; Shaft Packing		
27		Insert ; Reversible: Yes - No	; Face Material		
28		Insert Mounting: Clamped In - "O" Ring - Press Fit			
29		Gland ; Plain: Yes - No	Throttle Bushing Carbon: Yes - No ; Other		
30		Gland/Stuffing Box Machined & Tapped for: Dead - End Lub. - Circulating Lub. - Quenching - Vent & Drain			
31		Flushing Seal Faces with Discharge Bypass - Flushing Seal Faces with External Fluid			
32		Auxiliary Stuffing Box Req'd: Yes - No			
33		Weight of Pump	lb; Weight of Base		lb
34		Weight of Driver	lb; Shipping Weight		lb
35	MATERIALS	Casing & Covers: 316	Shaft: Steel		
36		Casing Wear Rings: 316	Shaft Sleeves: 316		
37		Impeller: 316	Lantern Rings:		
38		Impeller Wear Rings: 316	Glands:		
39		Stuffing Box Bushings: 316	Gaskets:		
40	DRIVER	Furnished by: Vendor ; Type (Elec. Motor) - Steam Turbine - Other	(Direct) Gear - Belt		
41		Electric Motor: Make Mounted by Vendor	Steam Turbine: Make Mounted by		
42		Enclosure TEFC SF Temp Rise °C	Model:		
43		Insulation Frame	Horsepower hp ; Speed		rpm
44		Estimated BHP Req'd. 20 hp	Inlet Steam Press., psig: Normal ; Max		
45.		Nominal Motor Size (Non-overloading) 25 hp	Inlet Steam Temp., °F: Normal ; Max.		
46		Speed 1150 rpm	Water Rate:		lb/hr
47		Volts 440 ; Phase 3 ; Cycle 60	Vacuum (If any)		mm - in. Hg - psia
48		Speed Reducer: Integral - Separate	Back Pressure		psig
49		Mfr. Ratio	Nozzles / Size / Rating / Facing / Location		
50		Model Class	Inlet		
51		See Driver Specification No.	Exhaust		
52	TESTS	Performance Curve: (Yes) No; Curve No.	MISC. Serial Number		
53		Certified: Yes (No)	Outline Drawing		
54		Hydrostatic Test: (Yes) - No; Pressure psig	Cross Section Drawing		
55		Shop Inspection: Yes (No)	Bulletin No. Page No.		

SPEC. BY EFH	DOW THE DOW CHEMICAL COMPANY	800	EQUIP. NO. P-1A&B
CHECKED:	SERVICE FILTER FEED PUMP	CENTRIFUGAL PUMP SPECIFICATIONS	
APP'D:			
DATE: 2/8/74	REVISION DATE A B C	SPEC. NO.	
VENDOR TO COMPLETE ALL INFORMATION MARKED _____	SHEET OF		

18370D 4/73

PLANT	Coal- Pyritic Sulfur Removal		FILE/JOB NO. 730623
LOCATION		BLDG. NO.	CHARGE NO.
MANUFACTURER		NO. UNITS 2 per Train	B/M NO.
			P.O. NO.

MODEL 3x4-8 NO. UNITS ASA PUMP [X] YES [ ] NO ASA DESIGNATION

1	SERVICE CONDITIONS	Liquid Pumped 1% Ferric/Ferrous Sulfate	Max. Capacity at P.T. 500 gpm	
2		Pumping Temperature (P.T.) 200 °F	Discharge Pressure psia	ft.
3		Specific Gravity at P.T. 1.0+	Suction Pressure psia 40	ft.
4		Viscosity at P.T. cs-cp	Differential Pressure psi 70	
5		Vapor Pressure at P.T.	Differential Head 30	ft.
6		Corrosion or Erosion Factors:	NPSH Available	ft.
7			NPSH Required (Water)	ft.
8	CONSTRUCTION DETAILS	Arrangement: (Horiz.) Vert.-In Line	Suction: (Single) Double	
9		Direction of Rotation Facing Pump Coupling: CW - CCW	Speed: 1750 rpm	
10		Case: Design Pressure psig	Number of Stages 1 ; Shut-Off Pressure	ft.
11		Max. Allow. Working Press. psig	Volumetric Efficiency at Rating	%
12		Split: Horiz-Vert-Barrel	Impeller Type	
13		Impeller Diameter: Supplied 7 inches;	Maximum 8 3/8 inches; Minimum 6	inches
14		Vent and Drain Tapped: Yes - No	Bearings: Thrust Type	
15		Nozzles / Size / Rating / Facing / Location	Radial Type	
16		Suction 4"	Lubrication on Bearings; Oil - Grease	
17		Discharge 3"	Oiler: Yes - No; Type	
18		Vents	Coupling: Yes - No; Mfr.	
19		Drains	Coupling Guard: Yes - No	
20		Cooling H_2O	Baseplate: Yes - No; Type	
21		Water Cooling: Casing-Stuff. Box-Bearings-Pedestal-Gland (None)	Total Water Required:	gpm
22		Smothering Gland: Yes - No	Lubrication on Stuffing Box: Oil-Grease-None Water	
23		Packing: Yes (No) Type	Sealing Oil Connection: (Yes) - No	
24		Mechanical Seal: (Yes) - No; Furnished by: Vendor	; Mfr. Type	
25		Single - Double-Inside-Outside-Balanced-Unbalanced		
26		Rotary Unit ; Seal Ring	; Face Material ; Shaft Packing	
27		Insert ; Reversible: Yes - No	; Face Material	
28		Insert Mounting: Clamped In - "O" Ring - Press Fit		
29		Gland ; Plain: Yes - No	Throttle Bushing Carbon: Yes - No ; Other	
30		Gland/Stuffing Box Machined & Tapped for: Dead - End Lub. - Circulating Lub. - Quenching - Vent &/Drain		
31		Flushing Seal Faces with Discharge Bypass - Flushing Seal Faces with External Fluid		
32		Auxiliary Stuffing Box Req'd: Yes - No		
33		Weight of Pump lb;	Weight of Base	lb
34		Weight of Driver lb;	Shipping Weight	lb
35	MATERIALS	Casing & Covers: 316	Shaft: Steel	
36		Casing Wear Rings: "	Shaft Sleeves: 316	
37		Impeller: "	Lantern Rings:	
38		Impeller Wear Rings: "	Glands:	
39		Stuffing Box Bushings: "	Gaskets:	
40	DRIVER	Furnished by: Vendor ; Type (Elec. Motor) - Steam Turbine - Other	(Direct) Gear - Belt	
41		Electric Motor: Make Mounted by Vendor	Steam Turbine: Make Mounted by	
42		Enclosure TEFC SF Temp Rise °C	Model:	
43		Insulation Frame	Horsepower hp ; Speed	rpm
44		Estimated BHP Req'd. <10 hp	Inlet Steam Press., psig: Normal	; Max
45		Nominal Motor Size (Non-overloading) 10 hp	Inlet Steam Temp., °F: Normal	; Max.
46		Speed 1750 rpm	Water Rate:	lb/hr
47		Volts 440 ; Phase 3 ; Cycle 60	Vacuum (If any)	mm - in. Hg - psia
48		Speed Reducer: Integral - Separate	Back Pressure	psig
49		Mfr. Ratio	Nozzles / Size / Rating / Facing / Location	
50		Model Class	Inlet	
51		See Driver Specification No.	Exhaust	
52	TESTS	Performance Curve: (Yes) - No; Curve No.	MISC. Serial Number	
53		Certified: Yes (No)	Outline Drawing	
54		Hydrostatic Test: (Yes) - No; Pressure psig	Cross Section Drawing	
55		Shop Inspection: Yes (No)	Bulletin No. Page No.	

SPEC. BY EFH	DOW THE DOW CHEMICAL COMPANY	800	EQUIP. NO. P-2AAB
CHECKED:	SERVICE	CENTRIFUGAL PUMP SPECIFICATIONS	
APP'D:	AQUEOUS FORWARDING PUMP		
DATE: 2/8/74	REVISION DATE A B C	SPEC. NO.	
VENDOR TO COMPLETE ALL INFORMATION MARKED _____	SHEET OF		

18370D 4/73

PLANT	Coal- Pyritic Sulfur Removal		FILE/JOB NO. 736623
LOCATION		BLDG. NO.	CHARGE NO.
MANUFACTURER		NO. UNITS 1 per Train	B/M NO.
			P. O. NO.

FIELD ERECTED YES (NO) | NO. UNITS 1/Train | TOTAL VOLUME 10,000 GAL

1	DESIGN DATA	Operating Pressure psig	0	
2		Operating Temperature °F	200	
3		Liquid Specific Gravity	1.0 & 0.67	
4		Contents Lethal	Yes (No)	
5		Design Pressure psig	25	
6		Design Temperature °F	250	
7				
8				
9		Hydrostatic Test psig	40	
10		Shell Heads Corr. Allow. in.		
11		Shell Heads Joint Eff. %		
12		Code: ASME	Stamp Yes (No)	
13		Radiograph: NO	Stress Relieve: NO	
14		National Board No.		
15		Type Supports: Lugs		
16		Insulation: 1"		
17		Fireproofing: Yes		
18		Sandblast: NO	Paint: NO	
19		Manhole 1 Hinged (Davitor)	Other:	
20		Platform Clips: NO	Ladder Clips: NO	Insul. Rings: Yes
21		Pipe Supports:		
22		Wind Load:	Seismic:	
23		Wt. Empty lb	Wt Full of Water lb	

		Item	Thickness	Mat'l Class	Mat'l - Minimum Quality
24	MATERIALS				
25		Shell	in.		Steel
26		Heads	in.		"
27		Lining	in.		Ceilcote 64
28			in.		
29			in.		
30		Nozzle Necks			Ceilcote 64 Lined
31		Flanges			" " Faced
32		Coupling			None
33		M.H. Cover			Ceilcote Faced
34		Supports			Steel
35		Bolts/Studs			
36		Nuts			
37		Gaskets			

		Service	Mark	No.	Size	Rating	Face	Type
38	NOZZLE SCHEDULE							
39		Inlet (42)	A	1	6"	150	FF	
40		Org Out (33)	B	1	6"	"	"	
41		Vent	C	1	2"	"	"	
42		LS	D	1	6"	"	"	
43		LT	E	2	2"	"	"	
44		Aq Out (40)	F	1	6"	"	"	
45		Manhole	G	1	20"	25#	"	
46			H					
47			J					
48			K					
49			L					
50			M					
51			N					
52			P					
53			Q					
54			R					

55 *Nozzle to be Plugged or Blinded

VESSEL SKETCH

9'-6" O.D. x 18'-4" Str Side
F&D Heads
Vertical

For Further Details, See Sheet No.

SPEC. BY EFH | THE DOW CHEMICAL COMPANY | 800 | EQUIP. NO. V-1

CHECKED:

APP'D:

SERVICE: DECANTER

VERTICAL VESSEL SPECIFICATIONS

DATE: 2/8/74 | REVISION DATE A B C

SPEC. NO.

VENDOR TO COMPLETE ALL INFORMATION MARKED _____ | SHEET OF

25840 3-68

PLANT Coal-Pyritic Sulfur Removal			FILE/JOB NO. 730623
LOCATION	BLDG. NO.		CHARGE NO.
MANUFACTURER Wyssmont	NO. UNITS 2 per train		B/M NO.
			P. O. NO.

TYPE

Turbo-Dryer with Solvent Recovery

DESIGN CONDITIONS

SPECIFICATIONS

	Feed (45)	Product (53)	Condensate (48)	Vent (49)
Coal	113.50	113.50		
FeS_2	0.39	0.39		
Sulfur	0.03	0.03		
$FeSO_4$	0.02	0.02		
$Fe_2(SO_4)_3$	0.09	0.09		
H_2SO_4	0.01	0.01		
H_2O	22.78	4.56	18.10	0.12
Naphtha	1.05	Neg	0.93	0.12 ⊗
Nitrogen	-	-	-	

Provide complete coal drying and solvent recovery system

Coal is minus 100 Mesh

Steam at 125 psig
Cooling water at 85°F

Provide cooling section to cool the dried coal to 160°F to avoid possible fire hazard as the dried coal leaves the drying system.

SPEC. BY EFA	THE DOW CHEMICAL COMPANY	900	EQUIP. NO. ME-1A&B
CHECKED:	SERVICE	MISCELLANEOUS EQUIPMENT SPECIFICATIONS	
APP'D:	COAL DRYER		
DATE: 2/9/74	REVISION DATE A 7/16/74 B C	SPEC. NO.	
VENDOR TO COMPLETE ALL INFORMATION MARKED ⊗	SHEET OF		

25260 3-66

PLANT Coal - Pyritic Sulfur Removal	FILE/JOB NO. 730623
LOCATION BLDG. NO.	CHARGE NO.
MANUFACTURER NO. UNITS 2 per train	B/M NO.
	P. O. NO.

TYPE

Redler or similar

DESIGN CONDITIONS

To convey 60 Tons/hr of minus 100 mesh dry coal from 900 ME-1A & B and discharge to conveyor 900-ME-3
Horizontal distance 35 ft
Vertical distance 25 ft

SPECIFICATIONS

Enclosed dust tight construction
Materials - Steel
Temperature 200° F

Furnish motor drive for 440V 60cy 3Ph TEFC

SPEC. BY EFH	DOW THE DOW CHEMICAL COMPANY	900	EQUIP. NO. ME-2A-B
CHECKED:	SERVICE CONVEYORS	MISCELLANEOUS EQUIPMENT SPECIFICATIONS	
APP'D:			
DATE: 2/8/74	REVISION DATE A B C	SPEC. NO.	
VENDOR TO COMPLETE ALL INFORMATION MARKED	SHEET OF		

25260 3-68

PLANT Coal-Pyritic Sulfur Removal			FILE/JOB NO. 730623
LOCATION	BLDG. NO.		CHARGE NO.
MANUFACTURER	NO. UNITS		B/M NO.
			P. O. NO.

1	TYPE	Enclosed Belt
2		
3		
4		
5		
6		
7	DESIGN CONDITIONS	To convey 120 Tons/hr of minus 100 mesh dry
8		Coal from 900-ME-2A&B to 900-ME-4 compactor
9		Horizontal Run 20 ft
10		Include chute from 900-ME-2A&B
11		Include total enclosure
12		
13		
14		
15	SPECIFICATIONS	Temperature 200°F
16		
17		Furnish motor drive for 440V 60Cy 3Ph TEFC
18		
19		
20		
21		
22		
23		
24		
25		
26		
27		
28		
29		
30		
31		
32		
33		
34		
35		
36		
37		
38		
39		
40		
41		
42		
43		
44		
45		
46		
47		
48		
49		
50		

SPEC. BY EFH	THE DOW CHEMICAL COMPANY	900	EQUIP. NO. ME-3
CHECKED:	SERVICE CONVEYOR	MISCELLANEOUS EQUIPMENT SPECIFICATIONS	
APP'D:			
DATE: 2/5/74	REVISION DATE A D C	SPEC. NO.	
VENDOR TO COMPLETE ALL INFORMATION MARKED		SHEET OF	

25260 3-68

PLANT Coal-Pyritic Sulfur Removal			FILE/JOB NO. 730623
LOCATION	BLDG. NO.		CHARGE NO.
MANUFACTURER Draco Corp	NO. UNITS 1 per Train		B/M NO.
			P. O. NO.

1	TYPE	Disc
2		
3		
4		
5		
6		
7	DESIGN CONDITIONS	To compact 120 Tons/hr minus 100 mesh
8		dry coal to 1/2" to 2" size lumps
9		
10		
11		
12		
13		
14		
15	SPECIFICATIONS	25' Dia Pelletizing Disc
16		Driven by 2-100 HP D.C. Motors
17		
18		
19		
20		
21		
22		
23		
24		
25		
26		
27		
28		
29		
30		
31		
32		
33		
34		
35		
36		
37		
38		
39		
40		
41		
42		
43		
44		
45		
46		
47		
48		
49		
50		

SPEC. BY EFH	DOW THE DOW CHEMICAL COMPANY	900	EQUIP. NO. A1E4
CHECKED:	SERVICE COMPACTOR	MISCELLANEOUS EQUIPMENT SPECIFICATIONS	
APP'D:			
DATE: 2/8/74	REVISION DATE A B C	SPEC. NO.	
VENDOR TO COMPLETE ALL INFORMATION MARKED	SHEET OF		

25200 3-68

PLANT Coal- Pyritic Sulfur Removal			FILE/JOB NO. 730623
LOCATION	BLDG. NO.		CHARGE NO.
MANUFACTURER	NO. UNITS 1 per Train		B/M NO.
			P. O. NO.

TYPE

Bucket Elevator
Heavy Duty
Enclosed Dust Tight

DESIGN CONDITIONS

To elevate 120 Tons/hr 1/2" to 2" Lumps of dry compacted coal from 900-ME-4 Compactor to 1001 Belt Conveyor.
Include inlet Transition chute 4'x6'x6' depth
Vertical distance 40 ft from top of inlet chute to top sprocket, 14 ft from base plate to top of chute, total 54 feet.

SPECIFICATIONS

Furnish motor drive 440V60cy3Ph TEFC

SPEC. BY EFH	THE DOW CHEMICAL COMPANY	900	EQUIP. NO. ME-5
CHECKED:	SERVICE ELEVATOR	MISCELLANEOUS EQUIPMENT SPECIFICATIONS	
APP'D:			
DATE: 2/8/74	REVISION DATE A B C	SPEC. NO.	
VENDOR TO COMPLETE ALL INFORMATION MARKED	SHEET OF		

25260 3-68

PLANT	Coal-Pyritic Sulfur Removal		FILE JOB NO 730632
LOCATION		BLDG. NO.	CHARGE NO.
MANUFACTURER		NO. UNITS 2 per Train	B MNO.
			P.O. NO.

MODEL 1 x 1½ -6 NO. UNITS ASA PUMP ☒ YES ☐ NO ASA DESIGNATION

1	SERVICE CONDITIONS	Liquid Pumped: Binder Solution	Max. Capacity at P.T. 15 gpm	
2		Pumping Temperature (P.T.) Ambient °F	Discharge Pressure psia 50 ft.	
3		Specific Gravity at P.T. 1.0	Suction Pressure psia 5 ft.	
4		Viscosity at P.T. cs-cp	Differential Pressure psi	
5		Vapor Pressure at P.T.	Differential Head 25 ft.	
6		Corrosion or Erosion Factors:	NPSH Available ft.	
7			NPSH Required (Water) ft.	
8	CONSTRUCTION DETAILS	Arrangement (Horiz.)-Vert.-In Line	Suction (Single)- Double	
9		Direction of Rotation Facing Pump Coupling: CW - CCW	Speed: 1750 rpm	
10		Case: Design Pressure psig	Number of Stages 1 ; Shut-Off Pressure ft.	
11		Max. Allow. Working Press. psig	Volumetric Efficiency at Rating %	
12		Split: Horiz-Vert-Barrel	Impeller Type	
13		Impeller Diameter: Supplied 5 inches;	Maximum 6 1/16 inches; Minimum 3 1/2 inches	
14		Vent and Drain Tapped: Yes - No	Bearings: Thrust Type	
15		Nozzles / Size / Rating / Facing / Location	Radial Type	
16		Suction 1½"	Lubrication on Bearings; Oil - Grease	
17		Discharge 1"	Oiler: Yes - No; Type	
18		Vents	Coupling: Yes - No; Mfr.	
19		Drains	Coupling Guard: Yes - No	
20		Cooling H2O	Baseplate: Yes - No; Type	
21		Water Cooling: Casing-Stuff. Box-Bearings-Pedestal-Gland-None	Total Water Required: gpm	
22		Smothering Gland: Yes - No	Lubrication on Stuffing Box: Oil-Grease-None	
23		Packing: Yes - No; Type	Sealing Oil Connection: Yes - No	
24		Mechanical Seal: (Yes)- No; Furnished by: vendor	; Mfr. Type	
25		Single - Double-Inside-Outside-Balanced-Unbalanced		
26		Rotary Unit ; Seal Ring	; Face Material ; Shaft Packing	
27		Insert ; Reversible: Yes - No	; Face Material	
28		Insert Mounting: Clamped In - "O" Ring - Press Fit		
29		Gland ; Plain: Yes - No	Throttle Bushing Carbon: Yes - No ; Other	
30		Gland/Stuffing Box Machined & Tapped for: Dead - End Lub. - Circulating Lub. - Quenching - Vent & Drain		
31		Flushing Seal Faces with Discharge Bypass - Flushing Seal Faces with External Fluid		
32		Auxiliary Stuffing Box Req'd: Yes - No		
33		Weight of Pump lb;	Weight of Base lb	
34		Weight of Driver lb;	Shipping Weight lb	
35	MATERIALS	Casing & Covers: Ductile Iron	Shaft: Steel	
36		Casing Wear Rings: "	Shaft Sleeves: None	
37		Impeller: "	Lantern Rings:	
38		Impeller Wear Rings: "	Glands:	
39		Stuffing Box Bushings: "	Gaskets:	
40	DRIVER	Furnished by: Vendor ; Type (Elec. Motor) Steam Turbine - Other	; Direct - Gear - Belt	
41		Electric Motor: Make Mounted by Vendor	Steam Turbine: Make Mounted by	
42		Enclosure TENV SF Temp Rise °C	Model:	
43		Insulation Frame	Horsepower hp ; Speed rpm	
44		Estimated BHP Req'd. <1 hp	Inlet Steam Press., psig: Normal ; Max	
45		Nominal Motor Size (Non-overloading) 1 hp	Inlet Steam Temp., °F: Normal ; Max.	
46		Speed rpm	Water Rate: lb/hr	
47		Volts 440 ; Phase 3 ; Hz 60	Vacuum (If any) mm - in. Hg - psia	
48		Speed Reducer: Integral - Separate	Back Pressure psig	
49		Mfr. Ratio	Nozzles / Size / Rating / Facing / Location	
50		Model Class	Inlet	
51		See Driver Specification No.	Exhaust	
52	TESTS	Performance Curve: (Yes)- No; Curve No.	MISC. Serial Number	
53		Certified: Yes - (No)	Outline Drawing	
54		Hydrostatic Test: Yes - No; Pressure psig	Cross Section Drawing	
55		Shop Inspection: Yes - (No)	Bulletin No. Page No.	

SPEC. BY EFH	DOW THE DOW CHEMICAL COMPANY	900	EQUIP. NO. P-1A-B
CHECKED:	SERVICE BINDER SOLUTION PUMP	CENTRIFUGAL PUMP SPECIFICATIONS	
APP'D:			
DATE: 2/9/74	REVISION DATE A B C	SPEC. NO.	
VENDOR TO COMPLETE ALL INFORMATION MARKED _____	SHEET OF		

18370D 4/73

PLANT COAL - PYRITIC SULFUR REMOVAL			FILE/JOB NO. 730623
LOCATION	BLDG. NO.		CHARGE NO.
MANUFACTURER	NO. UNITS 2 per Train		B/M NO.
			P.O. NO.

MODEL 3 x 1½ - 10 NO. UNITS ASA PUMP ☒ YES ☐ NO ASA DESIGNATION

1	SERVICE CONDITIONS	Liquid Pumped 50% Lignin Sulfonate	Max. Capacity at P.T. 100	gpm
2		Pumping Temperature (P.T.) Ambient °F	Discharge Pressure psia 80	ft.
3		Specific Gravity at P.T. 1.0	Suction Pressure psia 2	ft.
4		Viscosity at P.T. cs-cp	Differential Pressure psi	
5		Vapor Pressure at P.T.	Differential Head 78	ft.
6		Corrosion or Erosion Factors:	NPSH Available	ft.
7			NPSH Required (Water)	ft.
8	CONSTRUCTION DETAILS	Arrangement (Horiz.) Vert.-In Line	Suction: (Single) Double	
9		Direction of Rotation Facing Pump Coupling: CW - CCW	Speed: 1750	rpm
10		Case: Design Pressure psig	Number of Stages ; Shut-Off Pressure	ft.
11		Max. Allow. Working Press. psig	Volumetric Efficiency at Rating	%
12		Split: Horiz-Vert-Barrel	Impeller Type	
13		Impeller Diameter: Supplied 9½ inches;	Maximum 10 inches; Minimum 6	inches
14		Vent and Drain Tapped: Yes - No	Bearings: Thrust Type	
15		Nozzles / Size / Rating / Facing / Location	Radial Type	
16		Suction 3	Lubrication on Bearings; Oil - (Grease)	
17		Discharge 1½	Oiler: Yes - (No) Type	
18		Vents	Coupling: (Yes) - No; Mfr.	
19		Drains	Coupling Guard: (Yes) - No	
20		Cooling H_2O	Baseplate: (Yes) - No; Type	
21		Water Cooling: Casing-Stuff. Box-Bearings-Pedestal-Gland-(None)	Total Water Required:	gpm
22		Smothering Gland: Yes (No)	Lubrication on Stuffing Box: Oil-Grease-(None)	
23		Packing: Yes - No; Type	Sealing Oil Connection: Yes - No	
24		Mechanical Seal: (Yes) No; Furnished by; Vendor	; Mfr. Type	
25		Single - Double-Inside-Outside-Balanced-Unbalanced		
26		Rotary Unit ; Seal Ring	; Face Material ; Shaft Packing	
27		Insert ; Reversible: Yes - No	; Face Material	
28		Insert Mounting: Clamped In - "O" Ring - Press Fit		
29		Gland ; Plain: Yes - No	Throttle Bushing Carbon: Yes - No ; Other	
30		Gland/Stuffing Box Machined & Tapped for: Dead - End Lub. - Circulating Lub. - Quenching - Vent & Drain		
31		Flushing Seal Faces with Discharge Bypass - Flushing Seal Faces with External Fluid		
32		Auxiliary Stuffing Box Req'd: Yes - No		
33		Weight of Pump	lb; Weight of Base	lb
34		Weight of Driver	lb; Shipping Weight	lb
35	MATERIALS	Casing & Covers: Ductile Iron	Shaft: Steel	
36		Casing Wear Rings: " "	Shaft Sleeves:	
37		Impeller: " "	Lantern Rings:	
38		Impeller Wear Rings: " "	Glands:	
39		Stuffing Box Bushings: " "	Gaskets:	
40	DRIVER	Furnished by: Vendor ; Type (Elec. Motor) Steam Turbine - Other	; Direct - Gear - Belt	
41		Electric Motor: Make Mounted by Vendor	Steam Turbine: Make Mounted by	
42		Enclosure SF Temp Rise °C	Model:	
43		Insulation Frame	Horsepower hp ; Speed	rpm
44		Estimated BHP Req'd. 4 hp	Inlet Steam Press., psig: Normal ; Max	
45		Nominal Motor Size (Non-overloading) 5 hp	Inlet Steam Temp., °F: Normal ; Max.	
46		Speed 1750 rpm	Water Rate:	lb/hr
47		Volts 440 ; Phase 3 ; Cycle 60	Vacuum (If any)	mm - in. Hg - psia
48		Speed Reducer: Integral - Separate	Back Pressure	psig
49		Mfr. Ratio	Nozzles / Size / Rating / Facing / Location	
50		Model Class	Inlet	
51		See Driver Specification No.	Exhaust	
52	TESTS	Performance Curve: (Yes) - No; Curve No.	MISC. Serial Number	
53		Certified: Yes (No)	Outline Drawing	
54		Hydrostatic Test: Yes - No; Pressure psig	Cross Section Drawing	
55		Shop Inspection: Yes - (No)	Bulletin No. Page No.	

SPEC. BY EFH	DOW THE DOW CHEMICAL COMPANY	900	EQUIP. NO. P2A&B
CHECKED:	SERVICE BINDER UNLOADING PUMP	CENTRIFUGAL PUMP SPECIFICATIONS	
APP'D:			
DATE: 8/16/74	REVISION DATE A B C	SPEC. NO.	
VENDOR TO COMPLETE ALL INFORMATION MARKED _____	SHEET OF		

18370D 4/73

PLANT Coal-Pyritic Sulfur Removal			FILE/JOB NO. 730623
LOCATION	BLDG. NO.		CHARGE NO.
MANUFACTURER	NO. UNITS		B/M NO.
			P. O. NO.
FIELD ERECTED YES (NO)	NO. UNITS 1 per Train		NOMINAL VOLUME 300,000 Gal

DESIGN DATA

1	Oper. Press.-Positive	Vacuum	0 in. H_2O	0 oz
2	Operating Temperature °F		Ambient	
3	Liquid Specific Gravity		1.0	
4	Contents Lethal		Yes (No)	
5	Des. Press.-Positive	Vacuum	0 in. H_2O	0 oz
6	Design Temperature °F		Ambient	
7				
8				
9	Hydrostatic Test in. H_2O		Full Water	
10	Shell / Heads Corr. Allow. in.			
11	Shell / Heads Joint Eff. %			
12	Code:		Stamp Yes (No)	
13	Radiograph: No		Stress Relieve: NO	
14				
15	Type Supports: Ring Foundation			
16	Insulation: 1"			
17	Fireproofing: NO			
18	Sandblast: NO		Paint: NO	
19	Manhole Hinged (Davited) Other:			
20	Platform Clips: Yes	Ladder Clips: Yes	Insul. Rings: NO	
21	Pipe Supports: NO			
22				
23	Wind Load:		Seismic:	
24	Wt. Empty lb		Wt Full	

MATERIALS

25	Item	Thickness	Mat'l Class	Mat'l - Minimum Quality
26	Shell	in.		Steel
27	Cone Roof	in.		"
28	Bottom	in.		"
29	Lining	in.		NO
30		in.		
31		in.		
32	Nozzle Necks			Steel
33	Flanges			"
34	Coupling			"
35	M.H. Cover			
36	Supports			
37	Bolts/Studs			
38	Nuts			
39	Gaskets			

NOZZLE SCHEDULE

40	Service	Mark	No.	Size	Rating	Face	Type
41	Manhole	A	1	18"	25#	RF	
42	Inlet	B	1	3	150	RF	
43	Outlet	C	1	2"	"	"	
44	Vent	D	1	4"	"	"	
45		E					
46		F					
47		G					
48		H					
49		J					
50		K					
51		L					
52		M					
53		N					
54		P					

55 * Nozzle to be Plugged or Blinded.

VESSEL SKETCH

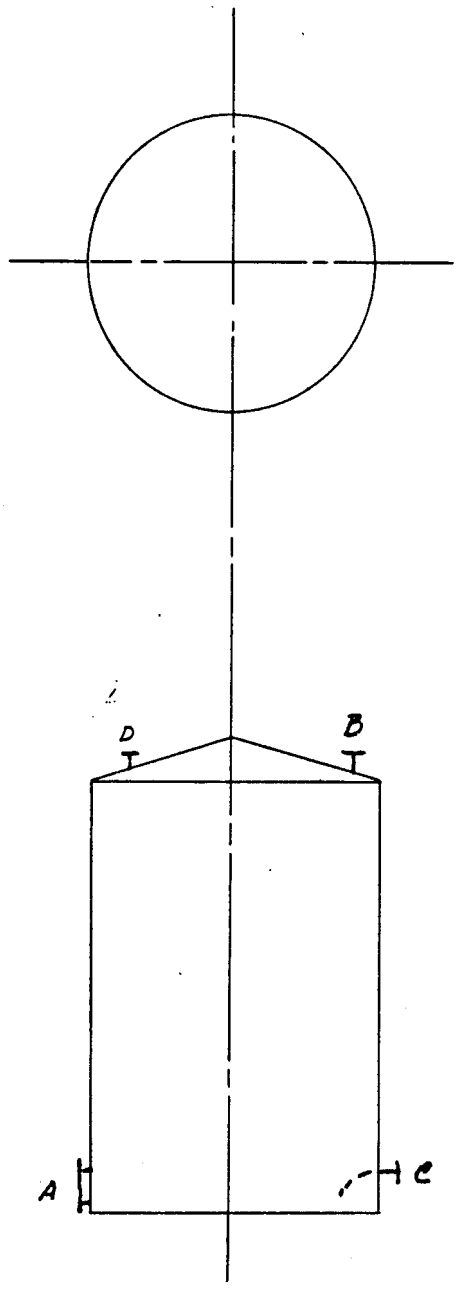

For Further Details, See Sheet No.

SPEC. BY EFH	DOW THE DOW CHEMICAL COMPANY	900	EQUIP. NO. T-1
CHECKED:	SERVICE BINDER SOLUTION TANK	VERTICAL TANK SPECIFICATIONS	
APP'D:			
DATE: 2/7/74	REVISION DATE A 8/16/74 B C	SPEC. NO.	
VENDOR TO COMPLETE ALL INFORMATION MARKED _____	SHEET OF		

25860 2-68

PLANT	Coal - Pyritic Sulfur Removal		FILE/JOB NO. 730623
LOCATION		BLDG. NO.	CHARGE NO.
MANUFACTURER		NO. UNITS 1 per Train	B/M NO.
			P. O. NO.

FIELD ERECTED YES (NO) | NO. UNITS 1 per Train | TOTAL VOLUME 1000 GAL

DESIGN DATA

1	Operating Pressure psig	0	
2	Operating Temperature °F	200	
3	Liquid Specific Gravity	1.0 & 0.67	
4	Contents Lethal	Yes (No)	
5	Design Pressure psig	25	
6	Design Temperature °F	250	
7			
8			
9	Hydrostatic Test psig	40	
10	Shell / Heads Corr. Allow. in.		
11	Shell / Heads Joint Eff. %		
12	Code: ASME	Stamp Yes (No)	
13	Radiograph: NO	Stress Relieve: NO	
14	National Board No.		
15	Type Supports: Lugs		
16	Insulation: 1"		
17	Fireproofing: Yes		
18	Sandblast: NO	Paint: NO	
19	Manhole NO Hinged Davited Other:		
20	Platform Clips: NO	Ladder Clips: NO	Insul. Rings: Yes
21	Pipe Supports:		
22	Wind Load:	Seismic:	
23	Wt. Empty lb	Wt Full of Water lb	

MATERIALS

	Item	Thickness	Mat'l Class	Mat'l - Minimum Quality
24				
25	Shell	in.		Steel
26	Heads	in.		"
27	Lining	in.		Ceilcote 64
28		in.		
29		in.		
30	Nozzle Necks			Ceilcote 64 Lined
31	Flanges			" " Faced
32	Coupling			None
33	M.H. Cover			Ceilcote 64 Faced
34	Supports			Steel
35	Bolts/Studs			
36	Nuts			
37	Gaskets			

NOZZLE SCHEDULE

	Service	Mark	No.	Size	Rating	Face	Type
38							
39	Inlet (48)	A	1	4"	150	FF	
40	LS	B	1	6"	"	"	
41	Vent (205)	C	1	2"	"	"	
42	Eq	D	1	2"	"	"	
43	Org Out (50)	E	1	2"	"	"	
44	Aq Out (51)	F	1	4"	"	"	
45		G					
46		H					
47		J					
48		K					
49		L					
50		M					
51		N					
52		P					
53		Q					
54		R					
55	*Nozzle to be Plugged or Blinded						

VESSEL SKETCH

4'-6" Dia 9'-2" BL-BL
Vertical
F&D Heads

For Further Details, See Sheet No.

SPEC. BY EFH	THE DOW CHEMICAL COMPANY	900	EQUIP. NO. V-1
CHECKED:	SERVICE DRYER CONDENSATE DECANTER	VERTICAL VESSEL SPECIFICATIONS	
APP'D:			
DATE: 2/8/74	REVISION DATE A B C	SPEC. NO.	
VENDOR TO COMPLETE ALL INFORMATION MARKED _____	SHEET OF		

25R40 3-68

PLANT	COAL- PYRITIC SULFUR REMOVAL		FILE/JOB NO. 730632
LOCATION		BLDG. NO.	CHARGE NO.
MANUFACTURER		NO. UNITS ONE	B/M NO.
			P. O. NO.

1	TYPE	PRODUCT COAL HANDLING
2		
3		
4		
5		
6		
7	DESIGN CONDITIONS	
8		
9		
10		
11		
12		
13		
14		
15	SPECIFICATIONS	1001 Belt Conveyor 36" x 650' 482 TPH
16		With totally enclosed gallery
17		With Transfer Tower
18		1002 Transfer Belt Conveyor 36" x 260' x 30' Lift 482 TPH
19		With totally enclosed gallery
20		With transfer Tower
21		
22		
23		
24		
25		
26		1005 Distributing Belt Conveyor 60" x 320' 442 TPH
27		With 3 plows
28		With totally enclosed gallery
29		1006 A-D Silos 70' Dia x 120' High (7500 Tons Ea)
30		With 7 gates per hopper
31		
32		1007 A-D (1-7) Feeders 28 Reqd (7 per hopper)
33		
34		1008 Reclaim Conveyor 60" x 350' x 30' Lift
35		1800 TPH
36		With 150' Totally enclosed gallery
37		
38		1009 Car Loading House
39		
40		
41		
42		
43		
44		
45		
46		
47		
48		
49		
50		

SPEC. BY EFH	DOW THE DOW CHEMICAL COMPANY					1000	EQUIP. NO. 1001-1009
CHECKED:	SERVICE PRODUCT COAL HANDLING					MISCELLANEOUS EQUIPMENT SPECIFICATIONS	
APP'D:							
DATE: 1/15/74	REVISION DATE	A	3/6/74	B		C	SPEC. NO.
VENDOR TO COMPLETE ALL INFORMATION MARKED					SHEET OF		

25260 3-68

PLANT Coal-Pyritic Sulfur Removal	FILE/JOB NO. 730623
LOCATION BLDG. NO.	CHARGE NO.
MANUFACTURER NO. UNITS 1 per Train	B/M NO.
	P. O. NO.

OPERATING CONDITIONS

1. Mounting: Portable - Permanent for Open Tank - Side Entering - Top Entering - Bottom Entering
2. Type of Operation: Batch - Continuous Operating Pressure psia Operating Temperature °F

Materials to Be Mixed	State	Lb per - hr	Viscosity - cp	Spec. Grav.	°F
Coal	Solid	75791		1.36	215
Iron Sulfates	Liquid	84680		1.18	215
Final Mixture	Slurry	160471		1.25	215

11. Solids Present Are: Soluble - (Insoluble) - (Abrasive) - Crystalline - Sticky or Gummy - Light or Fluffy
12. Particle Size or Sieve Analysis: Minus 100 Mesh
13. Settling Rate of Solids: Slow
14. Foaming Tendency of Mixture: Low - Medium - High No
15. Class of Agitation: Blend - Dissolve - Disperse Gas - (Suspend Solids) - Heat Transfer - Emulsify
16. Other:
17. Degree of Agitation: Mild - (Medium) - Violent
18. Too Much Agitation Will
19. Too Little Agitation Will
20. Largest Batch or Greatest Liquid Depth:
21. Smallest Batch or Lowest Liquid Depth:
22. Mixer Shall Be Designed to in Minutes
23. Mixer Will - (Will Not) Be operated While Filling or Drawing Off
24. Past Experience:
25.

TANK & INSTALLATION DATA

26. Vessel Type: Open Top - (Closed Top) - Horizontal - (Vertical) - API Tank - Other: ASME
27. Size: 96 in. ID by 96 in. Straight Side or in. Length
28. Bottom Type: Flat - (Flanged & Dished) - 2:1 Semi Elliptical - Cone
29. Top Type: Flat - (Flanged & Dished) - 2:1 Semi Elliptical - Cone
30. Vessel Can Be Altered: (Yes) - No; Describe
31. Design Pressure 25 psig; Design Temperature 250 °F
32. Dow Drawing No. ; Copies Attached: Yes - (No)
33. Size of Opening for Impeller Installation 20" ; Size of Nozzle for Mounting Agitator 12"
34. Selected Mounting Flange for Agitator: Size 12" ; Rating 150# ; Facing Flat
35. Location of Mounting Flange: As recommended
36. Baffles: No. ; Width in.; Length in.; Horizontal - Vertical; Other: As recommended
37. Stabilizing Ring Is - Is Not Required; Size
38. Shaft Seal: (Mechanical) - Packing - Other: ; Type Lubrication
39. Special Requirements;
40. Step Bearing Is - (Is Not) Permissible Head Room Available for Installing Mixer: Adequate
41. Materials of Construction for Wetted Parts: Neoprene

MIXER & DRIVER DATA

42. Mixer Model No. Driver Supplied by Vendor ; Gear Supplied by Vendor
43. Motor Drive: Mfgr. ; Speed rpm; Horsepower 2 hp; Enclosure TEFC
44. NEMA Frame ; Volts 440 ; Phase 3 ; Cycles 60
45. Turbine Drive: Mfgr. ; Speed rpm; Horsepower hp; Water Rate lb/hr
46. Inlet Steam: Pressure psig at °F
47. Exhaust Steam: Pressure psia - psig at °F
48. Other:
49. Gear: Mfgr. ; Ratio ; AGMA Rating ; Output Speed rpm
50. Shaft Coupling: Describe
51. Mechanical Seal: Describe
52. Stuffing Box: Describe
53. Shaft: Size in. OD by Length from Mounting Flange
54. Impeller: Type ; Size in. OD: No. Blades ; Removable from Shaft: Yes - No
55. Additional Data:

SPEC. BY EFH	THE DOW CHEMICAL COMPANY	1100	EQUIP. NO. A-1
CHECKED:	SERVICE RESLURRY TANK AGITATOR	AGITATOR OR MIXER SPECIFICATIONS	
APP'D:			
DATE: 2/15/74	REVISION DATE A B C	SPEC. NO.	
VENDOR TO COMPLETE ALL INFORMATION MARKED _____	SHEET OF		

20040 3-881

PLANT	Coal- Pyritic Sulfur Removal		FILE/JOB NO. 730623
LOCATION		BLDG. NO.	CHARGE NO.
MANUFACTURER		NO. UNITS 1 per Train	B/M NO.
			P. O. NO.
DUTY/UNIT 122,108,900 BTU/HR	NO. UNITS/ 1	SHELLS/UNIT 1	TEMA SIZE/TYPE

1	TYPE	(Horiz.) Vert. Sloped ° to horiz. (FTS with Exp. Joint) U-Tube Kettle Coil Hairpin Box				
2		Floating Hd.-Pull Thru-Clamp Ring-Packed Thermosyphon Fintube Other:				
3	PERFORMANCE OF ONE UNIT	Additional Proc. Data on Sheet No.	Inlet · SHELL SIDE · Outlet		Inlet · TUBE SIDE · Outlet	
4		Fluid	(96) Steam	(97)	(20) Iron Sulfate	(120)
5		Total Flow lb/hr	140,611		4,097,404	
6		Liquid lb/hr		140611	4,097,404	
7		Density lb/cu ft		1.0		1.25 sp gr
8		Viscosity CS-CP				
9		Specific Heat Btu/lb-°F				
10		Thermal Conductivity Btu/hr-sq ft-°F/ft				
11		Vapor lb/hr	140,611			301,363
12		Mol Wt Density lb/cu ft				
13		Viscosity CS-CP				
14		Specific Heat Btu/lb-°F				
15		Thermal Conductivity Btu/hr-sq ft-°F/ft				
16		Latent Heat Btu/lb				
17		Non-Condensables lb/hr		M.W. =		M.W. =
18		Velocity Max./Min. ft/sec			10	
19		Norm. Max. Operating Temp. °F	353	353	290	327.8
20		Operating Press. (Inlet) psig	125		35	
21		Pressure Drop psi	Allow. 5	Calc. 0	Allow 25	Calc. 15
22		Film Coeff. BTU/Hr. Sq. Ft.				
23		Fouling Resistance, hr-sq ft-°F/Btu:				
24		Over-all Coefficient- "U" Btu/hr-sq ft. °F; Clean	Service 500		LMTD (Corrected) 53.6 °F	
25		Installed Area/Unit 4600 sq ft (Outside) Including-Excluding Area in tube sheets.				

26	DESIGN DATA PER SHELL		SHELL SIDE	TUBE SIDE	Shell ID (Approximate) in.
27		Design Temperature °F	360	360	No. Tubes (Approximate) 680
28		Design Pressure psig	150	50	Tube OD 1 in. Tube Gage 12 BWG
29		Hydrostatic Test psig	225	75	Tube Length 26' (8M) ft
30		Corrosion Allow./Lining in.			Tube Pitch △ □ ◇ △ in.
31		Number of Passes	1	2	Joint
32		Insulation	1"	1"	Make/Type Fintubes
33		Cross Baffles: Type ; Segment Cut %			No. Fins per tube; per in.
34		Number ; Spacing Approx. Equal - See Sheet No.			Fin Height in. Fin Thick. in.
35		Provide in. Horizontal Cut on Bottom for Condensate Drain			Vessel Supports (Saddles) Lugs Other;
36		Long Baffles: Type ; Number			Weir Height in.; Shell After Weir in.
37		Impingement Baffle (Yes) No; Condensate Lift Yes (No); Removable Bundle Yes (No); Cathodic Protection Yes (No)			
38		TEMA Class; Lethal Yes (No); Code (ASME); National Board; Other: TEMA; Stamp (Yes) No			
39		Spot Radiograph: Shell Shell Cover Channel; Stress Relieve: Shell Shell Cover Channel Floating Head			
40		Weight Complete Empty/Full of Water / lb; Weight Bundle Only lb			
41		Sandblast: No; Paint: No; Maintain Shell ID Tube Count Installed Area+ %- %			

NOZZLES PER SHELL

	Service	SHELL SIDE Mk	Size	Rtg	Face	Type	TUBE SIDE Mk	Size	Rtg	Face	Type
42											
43											
44	Inlet	96	12"	150	RF		20	16"	150	RF	
45	Outlet	97	4"	"	"		120	16"	"	"	
46	Drain										
47	Vent										
48											
49											
50											
51											
52											

53 See Nozzle Sketch on Sheet No.

CONN.

54 Shell Side: Parallel Banks of Shells in Series

55 Tube Side: Parallel Banks of Shells in Series

56 Stacked: Wide High

MATERIAL SPECIFICATIONS

Tubes Titanium	Chan. Noz. Necks Ti
Stat Tube Sheet " Ti	Chan. Noz. Flanges Ti Face
Flig. Tube Sheet	Channel Flanges Ti Face
Cross Baf./Tube Sup. Steel	Flig. Head
Long Baffles	Flig. Hd. Flange
Impinge. Baffle "	Clamp Ring
Weir/Lift	Bolts/Studs
Tie Rods & Spacers "	Nuts
Shell "	Vessel Supports
Shell Cover	GASKETS & PACKING
Channel Ti Lined	Shell Cover
Ch. Cover/Bonnet "	Shell-Chan. Side
Shell Noz. Necks Steel	Channel
Shell Noz. Flanges "	Channel Cover
Shell Flanges "	Flig. Hd.

SPEC. BY EFH	DOW THE DOW CHEMICAL COMPANY	1100	EQUIP. NO. E-1
CHECKED:	SERVICE SULFATE EVAPORATOR HEATER	HEAT EXCHANGER SPECIFICATIONS	
APP'D:			
DATE: 2/14/74	REVISION DATE A B C	SPEC. NO.	
VENDOR TO COMPLETE ALL INFORMATION MARKED _____	SHEET OF		

17150 2-68

PLANT COAL - PYRITIC SULFUR REMOVAL			FILE/JOB NO. 730613
LOCATION	BLDG. NO.		CHARGE NO.
MANUFACTURER	NO. UNITS 1 per train (4 Trains)		B/M NO.
			P. O. NO.
DUTY/UNIT 1,529,900 BTU/HR	NO. UNITS 1	SHELLS/UNIT 1	TEMA SIZE/TYPE

1	TYPE	(Horiz.) Vert. Sloped ° to horiz.	(FTS) with Exp. Joint	U-Tube	Kettle	Coil Hairpin Box
2		Floating Hd.-Pull Thru-Clamp Ring-Packed	Thermosyphon	Fintube	Other:	

3	PERFORMANCE OF ONE UNIT	Additional Proc. Data on Sheet No.		Inlet - SHELL SIDE - Outlet		Inlet - TUBE SIDE - Outlet		
4		Fluid		(70) Water	(71)	(21) Iron Sulfates	(121)	
5		Total Flow	lb/hr	76,475		40,974		
6		Liquid	lb/hr	"	"	"	"	
7		Density	lb/cu ft	1.05 sp gr		1.25 sp gr		
8		Viscosity	CS-CP					
9		Specific Heat	Btu/lb-°F					
10		Thermal Conductivity	Btu/hr-sq ft-°F/ft					
11		Vapor	lb/hr					
12		Mol Wt Density	lb/cu ft					
13		Viscosity	CS-CP					
14		Specific Heat	Btu/lb-°F					
15		Thermal Conductivity	Btu/hr-sq ft-°F/ft					
16		Latent Heat	Btu/lb					
17		Non-Condensables	lb/hr		M.W. =		M.W. =	
18		Velocity Max./Min.	ft/sec			11	9	
19		Norm. Max. Operating Temp.	°F	85	105	290	215	
20		Operating Press. (Inlet)	psig	40		35		
21		Pressure Drop	psi	Allow. 10	Calc.	Allow 5	Calc.	
22		Film Coeff.	BTU/Hr. Sq. Ft.					
23		Fouling Resistance,	hr-sq ft-°F/Btu:					
24		Over-all Coefficient- "U"	Btu/hr-sq ft. °F; Clean	Service 200		LMTD (Corrected) 156 °F		
25		Installed Area/Unit 49	sq ft (Outside) Including-Excluding Area in tube sheets.					

26	DESIGN DATA PER SHELL		SHELL SIDE	TUBE SIDE	Shell ID (Approximate)	in.
27		Design Temperature °F	150	300	No. Tubes (Approximate) 8	
28		Design Pressure psig	150	150	Tube OD 1 in.	Tube Gage 12 BWG
29		Hydrostatic Test psig	225	225	Tube Length (BM) 26	ft
30		Corrosion Allow./Lining in.			Tube Pitch △ □ ◇ △	in.
31		Number of Passes	1	1	Joint	
32		Insulation	NO	1"	Make/Type Fintubes	
33		Cross Baffles: Type ; Segment Cut %			No. Fins per tube;	per in.
34		Number ; Spacing Approx. Equal - See Sheet No.			Fin Height in.	Fin Thick. in.
35		Provide in. Horizontal Cut on Bottom for Condensate Drain			Vessel Supports (Saddles) - Lugs Other;	
36		Long Baffles: Type ; Number			Weir Height in.; Shell After Weir -	in.
37		Impingement Baffle Yes-No	Condensate Lift Yes - No	Removable Bundle Yes - No	Cathodic Protection Yes - No	
38		(TEMA) Class	Lethal Yes - (No)	Code ASME National Board Other:		Stamp Yes - (No)
39		Spot Radiograph: No Shell Shell Cover Channel		Stress Relieve: No Shell Shell Cover Channel Floating Head		
40		Weight Complete Empty/Full of Water / lb			Weight Bundle Only	lb
41		Sandblast: ✓	Paint: Prime	Maintain	Shell ID Tube Count Installed Area+	%- %

42	NOZZLES PER SHELL		SHELL SIDE				TUBE SIDE					MATERIAL SPECIFICATIONS	
43		Service	Mk	Size	Rtg	Face	Type	Mk	Size	Rtg	Face	Type	Tubes Titanium	Chan. Noz. Necks Ti
44		Inlet	70	4"	150	RF		21	2"	150	RF		Stat Tube Sheet Ti Face	Chan. Noz. Flanges Ti Face
45		Outlet	71	4"	"	"		121	2"	"	"		Fltg. Tube Sheet	Channel Flanges Ti Face
46		Drain											Cross Baf./Tube Sup. Steel	Fltg. Head
47		Vent											Long Baffles Steel	Fltg. Hd. Flange
48													Impinge. Baffle NO	Clamp Ring
49													Weir/Lift NO	Bolts/Studs
50													Tie Rods & Spacers Steel	Nuts
51													Shell Steel	Vessel Supports Steel
52													Shell Cover "	GASKETS & PACKING
53		See Nozzle Sketch on Sheet No.											Channel Ti Lined	Shell Cover
54	CONN.	Shell Side:			Parallel Banks of				Shells in Series				Ch. Cover/Bonnet "	Shell-Chan. Side
55		Tube Side:			Parallel Banks of				Shells in Series				Shell Noz. Necks Steel	Channel
56		Stacked:			Wide				High				Shell Flanges Steel	Channel Cover
														Fltg. Hd.

SPEC. BY: EFH	DOW THE DOW CHEMICAL COMPANY	1100	EQUIP. NO. E-2
CHECKED:	SERVICE SULFATE COOLER	HEAT EXCHANGER SPECIFICATIONS	
APP'D:			
DATE: 2/14/74	REVISION DATE A B C	SPEC. NO.	
VENDOR TO COMPLETE ALL INFORMATION MARKED _____	SHEET OF		

17150D 1/73

PLANT	Coal- Pyritic Sulfur Removal		FILE/JOB NO. 730623
LOCATION	BLDG. NO.		CHARGE NO.
MANUFACTURER	NO. UNITS 1 per train		B/M NO.
			P. O. NO.
DUTY/UNIT 107,366,700 BTU/HR	NO. UNITS 1	SHELLS/UNIT 1	TEMA SIZE/TYPE

TYPE

1 Horiz. (Vert.) Sloped ° to horiz. (FTS) with Exp. Joint U-Tube Kettle Coil Hairpin Box

2 Floating Hd.-Pull Thru-Clamp Ring-Packed Thermosyphon Fintube Other:

PERFORMANCE OF ONE UNIT

3	Additional Proc. Data on Sheet No.		Inlet · SHELL SIDE · Outlet			Inlet · TUBE SIDE · Outlet			
4	Fluid		Steam			(66) Cooling Water (67)			
5	Total Flow	lb/hr	107,558			5,296,595			
6	Liquid	lb/hr		109,558		"		"	
7	Density	lb/cu ft							
8	Viscosity	CS-CP							
9	Specific Heat	Btu/lb-°F							
10	Thermal Conductivity	Btu/hr-sq ft-°F/ft							
11	Vapor	lb/hr	109,558						
12	Mol Wt Density	lb/cu ft							
13	Viscosity	CS-CP							
14	Specific Heat	Btu/lb-°F							
15	Thermal Conductivity	Btu/hr-sq ft-°F/ft							
16	Latent Heat	Btu/lb							
17	Non-Condensables	lb/hr		M.W. =			M.W. =		
18	Velocity Max./Min.	ft/sec							
19	Norm. / Max. Operating Temp.	°F	215	215	212	212	85	85	105	105
20	Operating Press. (Inlet)	psig	1 MAX			40			
21	Pressure Drop	psi	Allow. 1		Calc. Neg	Allow 5		Calc.	
22	Film Coeff.	BTU/Hr. Sq. Ft.							
23	Fouling Resistance,	hr-sq ft-°F/Btu:							
24	Over-all Coefficient "Uo"	Btu/hr-sq ft. °F; Clean		Service 500		LMTD (Corrected) 117 °F			
25	Installed Area/Unit	1550 sq ft (Outside) Including-Excluding Area in tube sheets							

DESIGN DATA PER SHELL

		SHELL SIDE	TUBE SIDE		
26				Shell ID (Approximate)	in.
27	Design Temperature °F	150	250	No. Tubes (Approximate) 1170	
28	Design Pressure psig	150	50	Tube OD 1" in.	Tube Gage 12 BWG
29	Hydrostatic Test psig	225	75	Tube Length 6	ft
30	Corrosion Allow./Lining in.		1	Tube Pitch △ □ ◇ △	in.
31	Number of Passes	10		Joint Rolled	
32	Insulation			Make/Type Fintubes	
33	Cross Baffles: Type ; Segment Cut %			No. Fins per tube;	per in.
34	Number 9 ; Spacing Approx. Equal - See Sheet No.			Fin Height in.	Fin Thick. in.
35	Provide in. Horizontal Cut on Bottom for Condensate Drain			Vessel Supports Saddles - Lugs Other; None	
36	Long Baffles: Type ; Number 0			Weir Height in.; Shell After Weir	in.
37	Impingement Baffle Yes - (No)	Condensate Lift Yes - (No)	Removable Bundle Yes - (No)	Cathodic Protection Yes - (No)	
38	TEMA Class	Lethal Yes - (No)	Code (ASME)	National Board Other:	Stamp Yes - (No)
39	Spot Radiograph: (NO) Shell Shell Cover Channel		Stress Relieve: NO Shell Shell Cover Channel		Floating Head
40	Weight Complete Empty/Full of Water / lb			Weight Bundle Only	lb
41	Sandblast: Yes	Paint: Prime	Maintain	Shell ID Tube Count	Installed Area+ %- %

NOZZLES PER SHELL

	Service	Mk	Size	Rtg	Face	Type	Mk	Size	Rtg	Face	Type
42		SHELL SIDE					TUBE SIDE				
43	Service	Mk	Size	Rtg	Face	Type	Mk	Size	Rtg	Face	Type
44	Inlet	68	16"	150	RF		(8)	—	—	—	
45	Outlet	69	16"	"	"		212	3"	150#	RF	
46	Drain										
47	Vent										
48											
49											
50	(8) Bolts to N033 Ice on 1100-T-1										
51											
52											
53	See Nozzle Sketch on Sheet No.										

CONN.

54 Shell Side: Parallel Banks of Shells In Series

55 Tube Side: Parallel Banks of Shells in Series

56 Stacked: Wide High

MATERIAL SPECIFICATIONS

Tubes	304	Chan. Noz. Necks	304
Stat Tube Sheet	304	Chan. Noz. Flanges	304 Face
Fltg. Tube Sheet		Channel Flanges	304 Face
Cross Baf./Tube Sup.		Fltg. Head	
Long Baffles		Fltg. Hd. Flange	
Impinge. Baffle		Clamp Ring	
Weir/Lift		Bolts/Studs	
Tie Rods & Spacers		Nuts	
Shell	Steel	Vessel Supports	
Shell Cover	"	GASKETS & PACKING	
Channel	304	Shell Cover	
Ch. Cover/Bonnet	304	Shell-Chan. Side	
Shell Noz. Necks	Steel	Channel	
Shell Noz. Flanges	"	Channel Cover	
Shell Flanges	"	Fltg. Hd.	

SPEC. BY EFH	DOW THE DOW CHEMICAL COMPANY	1100	EQUIP. NO. E-5
CHECKED:	SERVICE FLASH STEAM CONDENSER	HEAT EXCHANGER SPECIFICATIONS	
APP'D:			
DATE: 2/14/74	REVISION DATE A B C	SPEC. NO.	
VENDOR TO COMPLETE ALL INFORMATION MARKED _____	SHEET OF		

17180 2-68

PLANT	Coal- Pyritic Sulfur Removal		FILE/JOB NO. 730623
LOCATION		BLDG. NO.	CHARGE NO.
MANUFACTURER	Dorr-Oliver	NO. UNITS 2 per Train	B/M NO.
			P. O. NO.
MODEL/TYPE	Rotary Drum (10'x20')	NO. UNITS OPERATING 2	SPARES 0

		DATA		FEED (16)	FILTRATE (19)	BACKWASH	CAKE (18)
1	OPERATIONAL PERFORMANCE						
2		Fluid Coal & Sulfates		Slurry	-		
3		Flow-Process Basis	lb/hr	253,661	162713	—	90,948
4		Flow-Filter Basis	lb/hr				
5		Density	lb/cu ft	1.2 sp gr	1.15		
6		Viscosity	centipoise				
7		pH					
8		Solids in Stream	vol.% (wt.%)	30	0		83
9		Particle Size (Avg.)	microns	<100 Mesh			
10		Normal Max. Oper. Press.	psig				
11		Normal Max. Oper. Temp.	°F	215			
12		Allowable Pressure Drop	psi				
13							

14. Maximum Cake Volume: Type Discharge: Wet Cake (Dry Cake)
15. Cycle: Precoat Preparation Time ; Precoating Time
16. Filter Aid Preparation Time ; Filter Aid Application Time
17. Filtering Time ; Blowdown Time
18. Cleaning/Backwash Time
19. Total Time Between Successive Filter Cycles
20. Instrumentation: Manual-Semi Automatic (Automatic)

	DESIGN		Filter Shell	Feeder Tank	Filtrate Tank	
21						Code:
22		Design Pressure psig				Stamp Required: Yes - No
23		Design Temperature °F				Radiograph:
24		Hydrostatic Test psig				Stress Relieve:
25		Corr. Allow./Lin.-Shell Heads in.				Special Design:
26		Joint Efficiency-Shell Heads %				
27		Insulation				National Board No.

28. Electrical Construction: Standard Open Weatherproof Explosion Proof TEFC
29. Other:
30. Piping, Valves, Fittings Supplied with Filter to be in Accordance with:
31.

CONSTRUCTION DETAILS

32. Filter Tank: Horizontal - Vertical; Size in. IDx in. Tan to Tan; Type Heads
33. Elements: Area/Element sq ft; No. Req'd ; in. IDx in. ODx in. Length
34. Leaves: Area/Leaf sq ft; No. Req'd ; Leaf Height in.; Leaf Spacing in.
35. Element or Leaf Pore Size (Avg.) microns; Minimum Particle Size Retained microns
36. Maximum Cake Thickness in; Gross Filter Volume gal-cu ft; Heel Volume gal - cu ft
37. Precoat Req'd: Yes - (No) Material
38. Filteraid Req'd: Yes - (No) Material Filter Fabric: Material Polypropylene Mesh
39. Feed Pump Furnished by Owner ; Make ; Model ; Max. Flow gpm at psig
40. Mat'l (Wetted Parts) Neoprene ; Type Seal ; See Pump Spec No. #Drum Speed Control
41. Other Accessories: Vac Pump, Rec. Pump Level Control High & Low Pan Level Switches,
42. Package Unit Yes - No; Shop Assembled on Skids Yes - No; Floor Space Req'd ft x ft; Height ft
43. Weight Empty/Full of Water / lb; Shipping Weight lb.

NOZZLE SCHEDULE

	Service	Mark	No.	Size	Rtg.	Face	Type
44							
45	Inlet	A					
46	Outlet	B					
47	Vent	C					
48	Drain	D					
49	Relief Valve	E					
50	Pressure Gage	F					
51	Quick Open Cover	G					
52		H					
53		J					
54		K					
55	See Nozzle Sketch on Sheet No.						

MATERIALS

Item	Thickness	Mat'l Class	Mat'l-Minimum Quality
Filter Heads	in.		
Filter Shell	in.		
Lining	in.		Neoprene
	in.		
Elements			
Leaves			
M.H. Cover			
Bolts/Studs			
Nuts			
Gaskets			

SPEC. BY EFH	THE DOW CHEMICAL COMPANY	1100	EQUIP. NO. F-1A&B
CHECKED:	SERVICE SULFATE FILTER	FILTER SPECIFICATIONS	
APP'D:			
DATE: 2/12/74	REVISION DATE A B C	SPEC. NO.	
VENDOR TO COMPLETE ALL INFORMATION MARKED _____	SHEET OF		

25660 3-68

PLANT Coal-Pyritic Sulfur Removal			FILE/JOB NO. 730623
LOCATION	BLDG. NO.		CHARGE NO.
MANUFACTURER Dorr-Oliver	NO. UNITS 1 per Train		B/M NO.
			P. O. NO.
MODEL/TYPE Rotary Drum (10'x20')	NO. UNITS OPERATING 1		SPARES 0

OPERATIONAL PERFORMANCE

	DATA		FEED (121)	FILTRATE (123)	BACKWASH	(122) CAKE
1						
2	Fluid		Sulfates	Sulfates	—	Sulfates
3	Flow-Process Basis	lb/hr	40,974	24,819		16,154
4	Flow-Filter Basis	lb/hr				
5	Density	lb/cu ft				
6	Viscosity	centipoise				
7	pH					
8	Solids in Stream	vol.% (wt.%)	54	0		71
9	Particle Size (Avg.)	microns				
10	Normal Max. Oper. Press.	psig				
11	Normal Max. Oper. Temp.	°F	215			
12	Allowable Pressure Drop	psi				
13						

14 Maximum Cake Volume: Type Discharge: Wet Cake-Dry Cake
15 Cycle: Precoat Preparation Time ; Precoating Time
16 Filter Aid Preparation Time ; Filter Aid Application Time
17 Filtering Time ; Blowdown Time
18 Cleaning/Backwash Time
19 Total Time Between Successive Filter Cycles
20 Instrumentation: Manual-Semi Automatic-(Automatic)

DESIGN

		Filter Shell	Feeder Tank	Filtrate Tank	
21					Code:
22	Design Pressure psig				Stamp Required: Yes - No
23	Design Temperature °F				Radiograph:
24	Hydrostatic Test psig				Stress Relieve:
25	Corr. Allow./Lin.-Shell / Heads in.				Special Design:
26	Joint Efficiency-Shell / Heads %				
27	Insulation				Notional Board No.

28 Electrical Construction: Standard Open Weatherproof Explosion Proof TEFC
29 Other:
30 Piping, Valves, Fittings Supplied with Filter to be in Accordance with:
31

CONSTRUCTION DETAILS

32 Filter Tank: Horizontal - Vertical: Size in. IDx in. Tan to Tan; Type Heads
33 Elements: Area/Element sq ft; No. Req'd ; in. IDx in. ODx in. Length
34 Leaves: Area/Leaf sq ft; No. Req'd ; Leaf Height in.; Leaf Spacing in.
35 Element or Leaf Pore Size (Avg.) microns; Minimum Particle Size Retained microns
36 Maximum Cake Thickness in; Gross Filter Volume gal-cu ft; Heel Volume gal - cu ft
37 Precoat Req'd: Yes - (No) Material
38 Filteraid Req'd: Yes (No) Material Filter Fabric: Material Polypropylene; Mesh
39 Feed Pump Furnished by Owner ; Make ; Model ; Max. Flow gpm at psig
40 Mat'l (Wetted Parts) ; Type Seal ; See Pump Spec No.
41 Other Accessories: Vac Pump, Rec. Pump, Level Control, H&L pan switches Drum Speed Control
42 Package Unit Yes - No; Shop Assembled on Skids Yes - No; Floor Space Req'd ft x ft; Height ft
43 Weight Empty/Full of Water / lb; Shipping Weight lb.

NOZZLE SCHEDULE

	Service	Mark	No.	Size	Rtg.	Face	Type
44							
45	Inlet	A					
46	Outlet	B					
47	Vent	C					
48	Drain	D					
49	Relief Valve	E					
50	Pressure Gage	F					
51	Quick Open Cover	G					
52		H					
53		J					
54		K					

55 See Nozzle Sketch on Sheet No.

MATERIALS

Item	Thickness	Mat'l Class	Mat'l-Minimum Quality
Filter Heads	in.		
Filter Shell	in.		
Lining	in.		Neoprene
	in.		
Elements			
Leaves			
M.H. Cover			
Bolts/Studs			
Nuts			
Gaskets			

SPEC. BY EFH	DOW THE DOW CHEMICAL COMPANY	1100	EQUIP. NO. F-2
CHECKED:	SERVICE SULFATE FILTER	FILTER SPECIFICATIONS	
APP'D:			
DATE: 2/14/74	REVISION DATE A B C	SPEC. NO.	
VENDOR TO COMPLETE ALL INFORMATION MARKED _____	SHEET OF		

28660 8-68

PLANT Coal-Pyritic Sulfur Removal			FILE/JOB NO. 730623
LOCATION	BLDG. NO.		CHARGE NO.
MANUFACTURER	NO. UNITS 1 per Train		B/M NO.
			P. O. NO.

1	TYPE	Ring or Jet
2		
3		
4		
5		
6		
7	DESIGN CONDITIONS	99,909 #/hr 20 psig Steam (.05% H_2SO_4)
8		135 384 water at 211.6°F (.02% H_2SO_4) 30 psig
9		235 293 Total Inlet
10		133 411 #/hr water at 212.0°F
11		101 881 #/hr Steam at 212.0°F
12		235,293 Total Outlet 212.0°F (.03% H_2SO_4) 0 psig
13		
14		
15	SPECIFICATIONS	Material 304 Stainless Steel
16		
17		
18		
19		
20		
21		
22		
23		
24		
25		
26		
27		
28		
29		
30		
31		
32		
33		
34		
35		
36		
37		
38		
39		
40		
41		
42		
43		
44		
45		
46		
47		
48		
49		
50		

SPEC. BY EFH	THE DOW CHEMICAL COMPANY	1100	EQUIP. NO. ME-1
CHECKED:	SERVICE WASH WATER HEATER	MISCELLANEOUS EQUIPMENT SPECIFICATIONS	
APP'D:			
DATE: 2/16/74	REVISION DATE A B C	SPEC. NO.	
VENDOR TO COMPLETE ALL INFORMATION MARKED	SHEET OF		

25260 3-68

PLANT Coal- Pyritic Sulfur Removal			FILE/JOB NO. 730623
LOCATION	BLDG. NO.		CHARGE NO.
MANUFACTURER	NO. UNITS / per Train		B/M NO.
			P. O. NO.

TYPE

Steam Heated Evaporator/Dryer

DESIGN CONDITIONS

	Feed	Vapor	Product
$FeSO_4$	1520 #/hr	–	1520
$Fe_2(SO_4)_3$	8124	–	8124
H_2SO_4	2442	26.6	2415
H_2O	10252	6974.4	3278
Total	22336 #/hr	7001.0 #/hr	15337 #/hr
Pressure, psig	0	0	0
Temp °F	215	353	353

SPECIFICATIONS

Heating medium 400 psig Steam saturated

All materials in contact with process to be 304 stainless

Rotor drive 440V 3Ph 60cy TEFC

SPEC. BY EFH	DOW THE DOW CHEMICAL COMPANY	1100	EQUIP. NO. ME-2
CHECKED:	SERVICE SULFATE WASTE DRYER	MISCELLANEOUS EQUIPMENT SPECIFICATIONS	
APP'D:			
DATE: 2/14/74	REVISION DATE A B C	SPEC. NO.	
VENDOR TO COMPLETE ALL INFORMATION MARKED	SHEET OF		

25260 3-68

PLANT	Coal- Pyritic Sulfur Removal		FILE/JOB NO. 730623
LOCATION		BLDG. NO.	CHARGE NO.
MANUFACTURER		NO. UNITS 2/Train	B/M NO.
			P.O. NO.

MODEL 2x3-10 NO. UNITS ASA PUMP [X] YES [ ] NO ASA DESIGNATION

1	SERVICE CONDITIONS	Liquid Pumped Sulfate-Coal Slurry		Max. Capacity at P.T.	270 gpm
2		Pumping Temperature (P.T.) 216 °F		Discharge Pressure 157 psia	ft.
3		Specific Gravity at P.T. 1.2		Suction Pressure 17 psia	ft.
4		Viscosity at P.T. 0.76 (cs) cp		Differential Pressure 140 psi	
5		Vapor Pressure at P.T.		Differential Head 270	ft.
6		Corrosion or Erosion Factors:		NPSH Available	ft.
7				NPSH Required (Water)	ft.
8	CONSTRUCTION DETAILS	Arrangement (Horiz)-Vert.-In Line		Suction (Single)- Double	
9		Direction of Rotation Facing Pump Coupling: CW - CCW		Speed: 3500	rpm
10		Case: Design Pressure psig		Number of Stages ;Shut-Off Pressure	ft.
11		Max. Allow. Working Press. psig		Volumetric Efficiency at Rating	%
12		Split: Horiz-Vert-Barrel		Impeller Type	
13		Impeller Diameter: Supplied 8 1/2 inches;		Maximum 10 inches; Minimum 6 inches	
14		Vent and Drain Tapped: Yes - No		Bearings: Thrust Type	
15		Nozzles / Size / Rating / Facing / Location		Radial Type	
16		Suction / 3"		Lubrication on Bearings; Oil - Grease	
17		Discharge / 2"		Oiler: Yes - No; Type	
18		Vents		Coupling: Yes - No; Mfr.	
19		Drains		Coupling Guard: Yes - No	
20		Cooling H_2O		Baseplate: Yes - No; Type	
21		Water Cooling: Casing-Stuff. Box-Bearings-Pedestal-Gland-(None)		Total Water Required:	gpm
22		Smothering Gland: Yes -(No)		Lubrication on Stuffing Box: Oil-Grease-(None)	
23		Packing: Yes -(No) Type		Sealing Oil Connection: Yes - No	
24		Mechanical Seal: (Yes) - No; Furnished by: Vendor		; Mfr. Type	
25		Single - Double-Inside-Outside-Balanced-Unbalanced			
26		Rotary Unit ; Seal Ring		; Face Material ; Shaft Packing	
27		Insert ; Reversible: Yes - No		; Face Material	
28		Insert Mounting: Clamped In - "O" Ring - Press Fit			
29		Gland ; Plain: Yes -No		Throttle Bushing Carbon: Yes -No ; Other	
30		Gland/Stuffing Box Machined & Topped for: Dead - End Lub. - Circulating Lub. - Quenching - Vent & Drain			
31		Flushing Seal Faces with Discharge Bypass - Flushing Seal Faces with External Fluid			
32		Auxiliary Stuffing Box Req'd: Yes - No			
33		Weight of Pump		lb; Weight of Base	lb
34		Weight of Driver		lb; Shipping Weight	lb
35	MATERIALS	Casing & Covers: 316		Shaft: Steel	
36		Casing Wear Rings: 316		Shaft Sleeves: 316	
37		Impeller: 316		Lantern Rings:	
38		Impeller Wear Rings: 316		Glands:	
39		Stuffing Box Bushings: 316		Gaskets:	
40	DRIVER	Furnished by: Vendor ; Type (Elec. Motor)- Steam Turbine - Other		(Direct) Gear - Belt	
41		Electric Motor: Make Mounted by Vendor		Steam Turbine: Make Mounted by	
42		Enclosure TEFC SF Temp Rise °C		Model:	
43		Insulation Frame		Horsepower hp ; Speed	rpm
44		Estimated BHP Req'd. 48 hp		Inlet Steam Press., psig: Normal ; Max	
45		Nominal Motor Size (Non-overloading) 60 hp		Inlet Steam Temp., °F: Normal ; Max.	
46		Speed rpm		Water Rate:	lb/hr
47		Volts 440 ; Phase 3 ; Cycle 60		Vacuum (If any)	mm - in. Hg - psia
48		Speed Reducer: Integral - Separate		Back Pressure	psig
49		Mfr. Ratio		Nozzles / Size / Rating / Facing / Location	
50		Model Class		Inlet	
51		See Driver Specification No.		Exhaust	
52	TESTS	Performance Curve: (Yes) No; Curve No.	MISC.	Serial Number	
53		Certified: Yes -(No)		Outline Drawing	
54		Hydrostatic Test: (Yes) No; Pressure psig		Cross Section Drawing	
55		Shop Inspection: Yes - (No)		Bulletin No. Page No.	

SPEC. BY EFH	THE DOW CHEMICAL COMPANY	1100	EQUIP. NO. P-1A&B
CHECKED:	SERVICE SULFATE FORWARDING PUMP	CENTRIFUGAL PUMP SPECIFICATIONS	
APP'D:			
DATE: 2/14/74	REVISION DATE A B C	SPEC. NO.	
VENDOR TO COMPLETE ALL INFORMATION MARKED _____	SHEET OF		

18370D 4/73

PLANT	Coal- Pyritic Sulfur Removal		FILE/JOB NO. 730623
LOCATION		BLDG. NO.	CHARGE NO.
MANUFACTURER		NO. UNITS 2 per Train	B/M NO.
			P.O. NO.

MODEL 14X14-22 NO. UNITS ASA PUMP [X] YES [ ] NO ASA DESIGNATION

1	SERVICE CONDITIONS	Liquid Pumped Ferrous- Ferric Sulfate	Max. Capacity at P.T. 6800	gpm
2		Pumping Temperature (P.T.) 290 °F	Discharge Pressure 60 psia	ft.
3		Specific Gravity at P.T. 1.2	Suction Pressure 35 psia	ft.
4		Viscosity at P.T. 0.7 (cs) cp	Differential Pressure 25 psi	
5		Vapor Pressure at P.T.	Differential Head 50	ft.
6		Corrosion or Erosion Factors:	NPSH Available	ft.
7			NPSH Required (Water)	ft.
8	CONSTRUCTION DETAILS	Arrangement: (Horiz.) Vert.-In Line	Suction (Single)- Double	
9		Direction of Rotation Facing Pump Coupling: CW - CCW	Speed: 880	rpm
10		Case: Design Pressure 150 psig	Number of Stages 1 ; Shut-Off Pressure	ft.
11		Max. Allow. Working Press. 150 psig	Volumetric Efficiency at Rating	%
12		Split: Horiz-Vert-Barrel	Impeller Type	
13		Impeller Diameter: Supplied 19 1/2 inches;	Maximum 22 1/2 inches; Minimum 17 1/2	inches
14		Vent and Drain Tapped: Yes - No	Bearings: Thrust Type	
15		Nozzles / Size / Rating / Facing / Location	Radial Type	
16		Suction 14" 150# RF	Lubrication on Bearings; Oil - Grease	
17		Discharge 14" " "	Oiler: Yes - No; Type	
18		Vents	Coupling: Yes - No; Mfr.	
19		Drains	Coupling Guard: Yes - No	
20		Cooling H_2O	Baseplate: Yes - No; Type	
21		Water Cooling: Casing-Stuff. Box-Bearings-Pedestal-Gland-(None)	Total Water Required:	gpm
22		Smothering Gland: Yes - No	Lubrication on Stuffing Box: Oil-Grease-None Water	
23		Packing: Yes (No) Type	Sealing Oil Connection: (Yes) - No	
24		Mechanical Seal: (Yes) - No; Furnished by: Vendor	; Mfr. Type	
25		Single - Double-Inside-Outside-Balanced-Unbalanced		
26		Rotary Unit ; Seal Ring	; Face Material ; Shaft Packing	
27		Insert ; Reversible: Yes - No	; Face Material	
28		Insert Mounting: Clamped In - "O" Ring - Press Fit		
29		Gland ; Plain: Yes - No	Throttle Bushing Carbon: Yes - No ; Other	
30		Gland/Stuffing Box Machined & Tapped for: Dead - End Lub. - Circulating Lub. - Quenching - Vent & Drain		
31		Flushing Seal Faces with Discharge Bypass - Flushing Seal Faces with External Fluid		
32		Auxiliary Stuffing Box Req'd: Yes - No		
33		Weight of Pump	lb; Weight of Base	lb
34		Weight of Driver	lb; Shipping Weight	lb
35	MATERIALS	Casing & Covers: Titanium	Shaft:	
36		Casing Wear Rings: "	Shaft Sleeves: Titanium	
37		Impeller: "	Lantern Rings:	
38		Impeller Wear Rings: "	Glands:	
39		Stuffing Box Bushings: "	Gaskets:	
40	DRIVER	Furnished by: Vendor ; Type (Elec. Motor) - Steam Turbine - Other	(Direct) Gear - Belt	
41		Electric Motor: Make Mounted by Vendor	Steam Turbine: Make Mounted by	
42		Enclosure TEFC SF Temp Rise °C	Model:	
43		Insulation Frame	Horsepower hp ; Speed	rpm
44		Estimated BHP Req'd. 138 hp	Inlet Steam Press., psig: Normal ; Max	
45		Nominal Motor Size (Non-overloading) 150 hp	Inlet Steam Temp., °F: Normal ; Max.	
46		Speed 880 rpm	Water Rate:	lb/hr
47		Volts 440 ; Phase 3 ; Cycle 60	Vacuum (If any)	mm - in. Hg - psia
48		Speed Reducer: Integral - Separate	Back Pressure	psig
49		Mfr. Ratio	Nozzles / Size / Rating / Facing / Location	
50		Model Class	Inlet	
51		See Driver Specification No.	Exhaust	
52	TESTS	Performance Curve: (Yes) - No; Curve No.	MISC. Serial Number	
53		Certified: Yes (No)	Outline Drawing	
54		Hydrostatic Test: (Yes) - No; Pressure psig	Cross Section Drawing	
55		Shop Inspection: Yes (No)	Bulletin No. Page No.	

SPEC. BY EFH

DOW THE DOW CHEMICAL COMPANY

CHECKED:

APP'D:

SERVICE: SULFATE EVAP CIRC PUMP

DATE: 2/14/74

REVISION DATE A B C

VENDOR TO COMPLETE ALL INFORMATION MARKED _____ SHEET OF

1100 EQUIP. NO. P-2A&B

CENTRIFUGAL PUMP SPECIFICATIONS

SPEC. NO.

18370D 4/73

PLANT	Coal - Pyritic Sulfur Removal		FILE/JOB NO. 730623
LOCATION		BLDG. NO.	CHARGE NO.
MANUFACTURER		NO. UNITS 2 per Train	B/M NO.
			P.O. NO.

MODEL 3x4-13 NO. UNITS ASA PUMP ☒ YES ☐ NO ASA DESIGNATION

1	SERVICE CONDITIONS	Liquid Pumped Water (Traces Sulfates)	Max. Capacity at P.T. 550 gpm
2		Pumping Temperature (P.T.) 211.6 °F	Discharge Pressure psia 85 ft.
3		Specific Gravity at P.T. 1.0	Suction Pressure psia 10 ft.
4		Viscosity at P.T. cs-cp	Differential Pressure psi
5		Vapor Pressure at P.T.	Differential Head 75 ft.
6		Corrosion or Erosion Factors:	NPSH Available ft.
7			NPSH Required (Water) ft.
8	CONSTRUCTION DETAILS	Arrangement: (Horiz.) - Vert.-In Line	Suction (Single) - Double
9		Direction of Rotation Facing Pump Coupling: CW - CCW	Speed: 1750 rpm
10		Case: Design Pressure psig	Number of Stages 1 ; Shut-Off Pressure ft.
11		Max. Allow. Working Press. psig	Volumetric Efficiency at Rating %
12		Split: Horiz-Vert-Barrel	Impeller Type
13		Impeller Diameter: Supplied 10 inches;	Maximum 13 inches; Minimum 9 inches
14		Vent and Drain Tapped: Yes - No	Bearings: Thrust Type
15		Nozzles / Size / Rating / Facing / Location	Radial Type
16		Suction 4"	Lubrication on Bearings; Oil - Grease
17		Discharge 3"	Oiler: Yes - No; Type
18		Vents	Coupling: Yes - No; Mfr.
19		Drains	Coupling Guard: Yes - No
20		Cooling H_2O	Baseplate: Yes - No; Type
21		Water Cooling: Casing-Stuff. Box-Bearings-Pedestal-Gland-(None)	Total Water Required: gpm
22		Smothering Gland: Yes - No	Lubrication on Stuffing Box: Oil-Grease-None
23		Packing: Yes - No; Type	Sealing Oil Connection: Yes - No
24		Mechanical Seal: (Yes) - No; Furnished by: Vendor	; Mfr. Type
25		Single - Double-Inside-Outside-Balanced-Unbalanced	
26		Rotary Unit ; Seal Ring	; Face Material ; Shaft Packing
27		Insert ; Reversible: Yes - No	; Face Material
28		Insert Mounting: Clamped In - "O" Ring - Press Fit	
29		Gland ; Plain: Yes - No	Throttle Bushing Carbon: Yes - No ; Other
30		Gland/Stuffing Box Machined & Tapped for: Dead - End Lub. - Circulating Lub. - Quenching - Vent & Drain	
31		Flushing Seal Faces with Discharge Bypass - Flushing Seal Faces with External Fluid	
32		Auxiliary Stuffing Box Req'd: Yes - No	
33		Weight of Pump lb;	Weight of Base lb
34		Weight of Driver lb;	Shipping Weight lb
35	MATERIALS	Casing & Covers: 316	Shaft: Steel
36		Casing Wear Rings: 316	Shaft Sleeves: 316
37		Impeller: 316	Lantern Rings:
38		Impeller Wear Rings: 316	Glands:
39		Stuffing Box Bushings: 316	Gaskets:
40	DRIVER	Furnished by: Vendor ; Type (Elec. Motor) Steam Turbine - Other	(Direct) Gear - Belt
41		Electric Motor: Make Mounted by Vendor	Steam Turbine: Make Mounted by
42		Enclosure SF Temp Rise °C	Model:
43		Insulation Frame	Horsepower hp ; Speed rpm
44		Estimated BHP Req'd. 25 hp	Inlet Steam Press., psig: Normal ; Max
45		Nominal Motor Size (Non-overloading) 30 hp	Inlet Steam Temp., °F: Normal ; Max.
46		Speed rpm	Water Rate: lb/hr
47		Volts 440 ; Phase 3 ; Cycle 60	Vacuum (If any) mm - in. Hg - psia
48		Speed Reducer: Integral - Separate	Back Pressure psig
49		Mfr. Ratio	Nozzles / Size / Rating / Facing / Location
50		Model Class	Inlet
51		See Driver Specification No.	Exhaust
52	TESTS	Performance Curve: (Yes) - No; Curve No.	MISC. Serial Number
53		Certified: Yes (No)	Outline Drawing
54		Hydrostatic Test: (Yes) - No; Pressure psig	Cross Section Drawing
55		Shop Inspection: Yes (No)	Bulletin No. Page No.

SPEC. BY EFH	DOW THE DOW CHEMICAL COMPANY	1100	EQUIP. NO. P-3A08
CHECKED:	SERVICE	CENTRIFUGAL PUMP SPECIFICATIONS	
APP'D:	RECOVERED WATER FEED PUMP		
DATE: 2/14/74	REVISION DATE A B C	SPEC. NO.	
VENDOR TO COMPLETE ALL INFORMATION MARKED _____	SHEET OF		

18370D 4/73

PLANT Coal-Pyritic Sulfur Removal			FILE JOB NO 730623
LOCATION	BLDG. NO.		CHARGE NO.
MANUFACTURER	NO. UNITS 2 per Train		B/M NO.
			P.O. NO.

MODEL 1x1½-6 NO. UNITS ASA PUMP [X] YES [ ] NO ASA DESIGNATION

1	SERVICE CONDITIONS	Liquid Pumped 98% H_2SO_4	Max. Capacity at P.T. 4 gpm	
2		Pumping Temperature (P.T.) Ambient °F	Discharge Pressure psia ft.	
3		Specific Gravity at P.T. 1.83	Suction Pressure psia ft.	
4		Viscosity at P.T. cs-cp	Differential Pressure psi	
5		Vapor Pressure at P.T.	Differential Head 100 ft.	
6		Corrosion or Erosion Factors:	NPSH Available ft.	
7			NPSH Required (Water) ft.	
8	CONSTRUCTION DETAILS	Arrangement (Horiz.) Vert.-In Line	Suction (Single)- Double	
9		Direction of Rotation Facing Pump Coupling: CW - CCW	Speed: 3500 rpm	
10		Case: Design Pressure psig	Number of Stages 1 ; Shut-Off Pressure ft.	
11		Max. Allow. Working Press. psig	Volumetric Efficiency at Rating %	
12		Split: Horiz-Vert-Barrel	Impeller Type	
13		Impeller Diameter: Supplied 4 3/4 inches;	Maximum 6 inches; Minimum 3 1/2 inches	
14		Vent and Drain Tapped: Yes - No	Bearings: Thrust Type	
15		Nozzles / Size / Rating / Facing / Location	Radial Type	
16		Suction 1½"	Lubrication on Bearings; Oil - Grease	
17		Discharge 1"	Oiler: Yes - No; Type	
18		Vents	Coupling: Yes - No; Mfr.	
19		Drains	Coupling Guard: Yes - No	
20		Cooling H_2O	Baseplate: Yes - No; Type	
21		Water Cooling: Casing-Stuff. Box-Bearings-Pedestal-Gland-None	Total Water Required: gpm	
22		Smothering Gland: Yes - No	Lubrication on Stuffing Box: Oil-Grease-None	
23		Packing: Yes - No; Type	Sealing Oil Connection: Yes - No	
24		Mechanical Seal: (Yes) - No; Furnished by: Vendor	; Mfr. Type	
25		Single - Double-Inside-Outside-Balanced-Unbalanced		
26		Rotary Unit ; Seal Ring	; Face Material ; Shaft Packing	
27		Insert ; Reversible: Yes - No	; Face Material	
28		Insert Mounting: Clamped In - "O" Ring - Press Fit		
29		Gland ; Plain: Yes - No	Throttle Bushing Carbon: Yes - No ; Other	
30		Gland/Stuffing Box Machined & Tapped for: Dead - End Lub. - Circulating Lub. - Quenching - Vent & Drain		
31		Flushing Seal Faces with Discharge Bypass - Flushing Seal Faces with External Fluid		
32		Auxiliary Stuffing Box Req'd: Yes - No		
33		Weight of Pump lb;	Weight of Base lb	
34		Weight of Driver lb;	Shipping Weight lb	
35	MATERIALS	Casing & Covers: Ductile Iron	Shaft: Steel	
36		Casing Wear Rings: " "	Shaft Sleeves: "	
37		Impeller: " "	Lantern Rings:	
38		Impeller Wear Rings: " "	Glands:	
39		Stuffing Box Bushings: " "	Gaskets:	
40	DRIVER	Furnished by: Vendor ; Type (Elec. Motor) Steam Turbine - Other	; Direct - Gear - Belt	
41		Electric Motor: Make Mounted by Vendor	Steam Turbine: Make Mounted by	
42		Enclosure SF Temp Rise °C	Model:	
43		Insulation Frame	Horsepower hp ; Speed rpm	
44		Estimated BHP Req'd. 1.1 hp	Inlet Steam Press., psig: Normal ; Max	
45		Nominal Motor Size (Non-overloading) 1½ hp	Inlet Steam Temp., °F: Normal ; Max.	
46		Speed 3500 rpm	Water Rate: lb/hr	
47		Volts 440 ; Phase 3 ; Hz 60	Vacuum (If any) mm - in. Hg - psia	
48		Speed Reducer: Integral - Separate	Back Pressure psig	
49		Mfr. Ratio	Nozzles / Size / Rating / Facing / Location	
50		Model Class	Inlet	
51		See Driver Specification No.	Exhaust	
52	TESTS	Performance Curve: Yes - No; Curve No.	MISC. Serial Number	
53		Certified: Yes - No	Outline Drawing	
54		Hydrostatic Test: Yes - No; Pressure psig	Cross Section Drawing	
55		Shop Inspection: Yes - No	Bulletin No. Page No.	

SPEC. BY EFH	THE DOW CHEMICAL COMPANY	1100	EQUIP. NO. P-4A&B
CHECKED:	SERVICE SULFURIC ACID FEED PUMP	CENTRIFUGAL PUMP SPECIFICATIONS	
APP'D:			
DATE: 2/14/74	REVISION DATE A B C	SPEC. NO.	
VENDOR TO COMPLETE ALL INFORMATION MARKED _____	SHEET OF		

18370D 4/73

PLANT	Coal- Pyritic Sulfur Removal		FILE/JOB NO. 736623
LOCATION		BLDG. NO.	CHARGE NO.
MANUFACTURER		NO. UNITS 1 per Train	B/M NO.
			P. O. NO.
FIELD ERECTED	(YES) NO	NO. UNITS 1	NOMINAL VOLUME 150,000 gal

1	DESIGN DATA	Oper. Press.-Positive / Vacuum	0 in. H_2O	0 oz
2		Operating Temperature °F	200	
3		Liquid Specific Gravity	1.0	
4		Contents Lethal	Yes (No)	
5		Des. Press.-Positive / Vacuum	0 in. H_2O	0 oz
6		Design Temperature °F	200	
7				
8				
9		Hydrostatic Test in. H_2O	Full of water	
10		Shell / Heads Corr. Allow. in.		
11		Shell / Heads Joint Eff. %		
12		Code: API	Stamp Yes (No)	
13		Radiograph: NO	Stress Relieve: NO	
14				
15		Type Supports: Ring Foundation		
16		Insulation: 1"		
17		Fireproofing: NO		
18		Sandblast: NO	Paint: NO	
19		Manhole / Hinged / Davited / Other:		
20		Platform Clips: Yes / Ladder Clips: Yes	Insul. Rings: Yes	
21		Pipe Supports:		
22				
23		Wind Load:	Seismic:	
24		Wt. Empty lb	Wt Full	

		Item	Thickness	Mat'l Class	Mat'l - Minimum Quality
25	MATERIALS				
26		Shell	in.		Steel
27		Cone Roof	in.		Steel
28		Bottom	in.		Steel
29		Lining	in.		Fed Spec TTP-86 Type A
30			in.		(Red Lead Phenolic)
31			in.		
32		Nozzle Necks			
33		Flanges			
34		Coupling			
35		M.H. Cover			
36		Supports			
37		Bolts/Studs			
38		Nuts			
39		Gaskets			

		Service	Mark	No.	Size	Rating	Face	Type
40	NOZZLE SCHEDULE							
41		Inlet (28)	A	1	4"	150#	RF	
42		1100-E-5	B	1	30"	⊗	RF	
43		Inlet (51)	C	1	2"	150#	RF	
44		Inlet (55)	D	1				
45		Outlet	E	1				
46			F					
47			G					
48			H					
49			J					
50			K					
51			L					
52			M					
53			N					
54			P					
55		* Nozzle to be Plugged or Blinded.						

VESSEL SKETCH

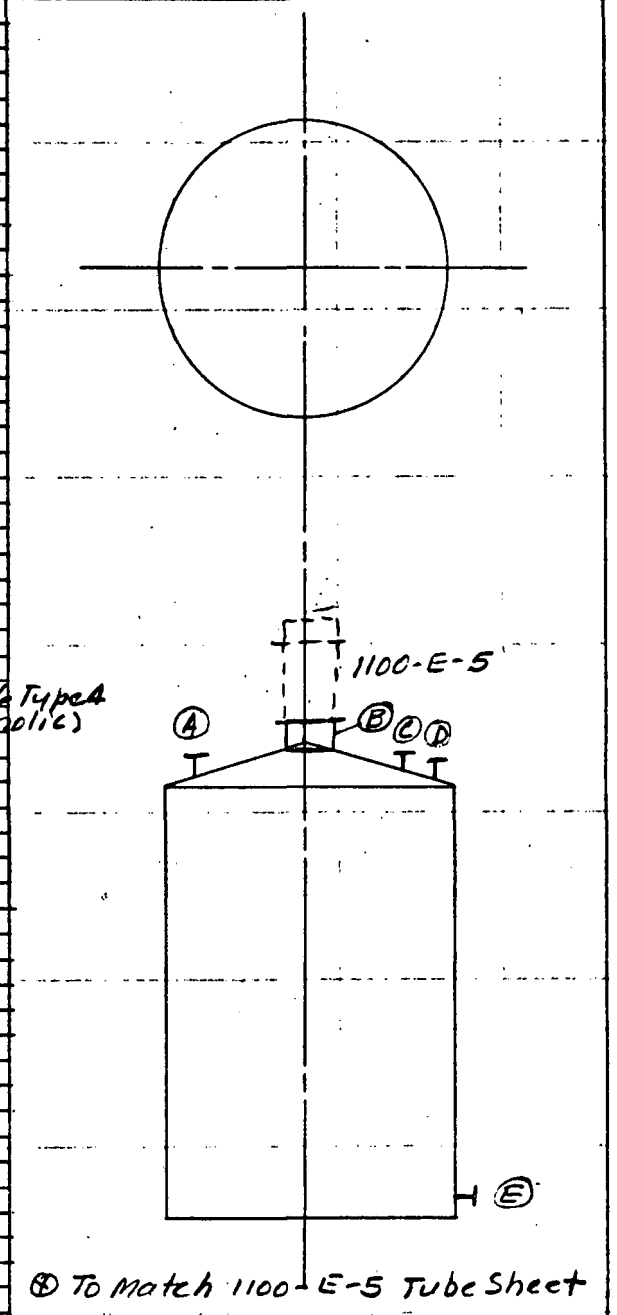

For Further Details, See Sheet No.

SPEC. BY EFH	THE DOW CHEMICAL COMPANY	1100	EQUIP. NO. T-1
CHECKED:	SERVICE WASH WATER SURGE	VERTICAL TANK SPECIFICATIONS	
APP'D:			
DATE: 2/14/74	REVISION DATE A B C	SPEC. NO.	
VENDOR TO COMPLETE ALL INFORMATION MARKED _____	SHEET OF		

25660 2-68

PLANT Coal - Pyritic Sulfur Removal			FILE/JOB NO. 730623
LOCATION	BLDG. NO.		CHARGE NO.
MANUFACTURER	NO. UNITS 1 per Train		B/M NO.
			P. O. NO.
FIELD ERECTED (YES) NO	NO. UNITS		NOMINAL VOLUME 30,000 gal

DESIGN DATA

1	Oper. Press.-Positive / Vacuum	0 in. H_2O / 0 oz
2	Operating Temperature °F	Ambient
3	Liquid Specific Gravity	1.53
4	Contents Lethal	Yes (No)
5	Des. Press.-Positive / Vacuum	0 in. H_2O / 0 oz
6	Design Temperature °F	150
7		
8		
9	Hydrostatic Test in. H_2O	Full of Water
10	Shell / Heads Corr. Allow. in.	1/8" / 1/8"
11	Shell / Heads Joint Eff. %	
12	Code: API	Stamp (Yes) No
13	Radiograph: NO	Stress Relieve: NO
14		
15	Type Supports: Ring Foundation	
16	Insulation: NO	
17	Fireproofing: NO	
18	Sandblast: yes	Paint: Prime
19	Manhole Hinged (Davited) Other:	
20	Platform Clips: NO / Ladder Clips: yes	Insul. Rings: NO
21	Pipe Supports: NO	
22		
23	Wind Load:	Seismic:
24	Wt. Empty lb	Wt Full

MATERIALS

	Item	Thickness	Mat'l Class	Mat'l - Minimum Quality
25				
26	Shell	in.		Steel
27	Cone Roof	in.		"
28	Bottom	in.		"
29	Lining	in.		
30		in.		
31		in.		
32	Nozzle Necks			Steel
33	Flanges			"
34	Coupling			"
35	M.H. Cover			"
36	Supports			
37	Bolts/Studs			
38	Nuts			
39	Gaskets			

NOZZLE SCHEDULE

	Service	Mark	No.	Size	Rating	Face	Type
40							
41	Inlet	A	1	4"	150#	RF	
42	LT	B	1	2"	"	"	
43	LS	C	1	4"	"	"	
44	Vent	D	1	4"	"	"	
45	Outlet	E	1	3"	"	"	
46	Manhole	F	1	20"	25#	"	
47		G					
48		H					
49		J					
50		K					
51		L					
52		M					
53		N					
54		P					

55 * Nozzle to be Plugged or Blinded.

VESSEL SKETCH

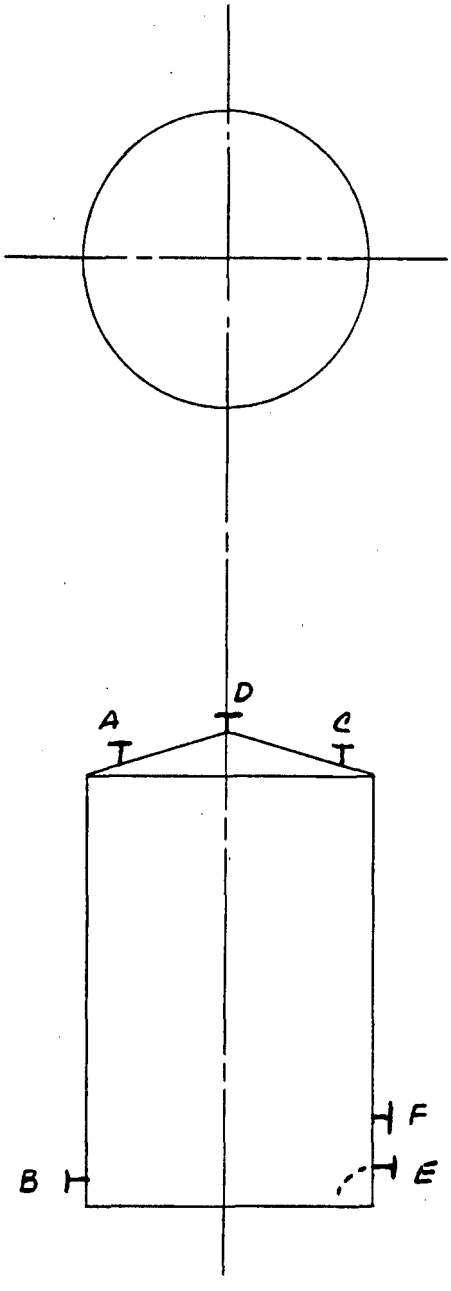

For Further Details, See Sheet No.

SPEC. BY EFH	DOW THE DOW CHEMICAL COMPANY	1100	EQUIP. NO. T-2
CHECKED:	SERVICE SULFURIC ACID STORAGE	VERTICAL TANK SPECIFICATIONS	
APP'D:			
DATE: 2/14/74	REVISION DATE A B C	SPEC. NO.	
VENDOR TO COMPLETE ALL INFORMATION MARKED _____	SHEET OF		

25860 2-66

PLANT	Coal- Pyritic Sulfur Removal		FILE/JOB NO. 73623
LOCATION		BLDG. NO.	CHARGE NO.
MANUFACTURER		NO. UNITS 1 per Train	B/M NO.
			P. O. NO.

FIELD ERECTED YES (NO) | NO. UNITS 1 | TOTAL VOLUME 5000 GAL

1	DESIGN DATA	Operating Pressure psig	35	
2		Operating Temperature °F	290	
3		Liquid Specific Gravity	1.2	
4		Contents Lethal	Yes (No)	
5		Design Pressure psig	50	
6		Design Temperature °F	300	
7				
8				
9		Hydrostatic Test psig	75	
10		Shell / Heads Corr. Allow. in.		
11		Shell / Heads Joint Eff. %		
12		Code: ASME	Stamp (Yes) No	
13		Radiograph: NO	Stress Relieve: NO	
14		National Board No.		
15		Type Supports: Skirt		
16		Insulation: 1"		
17		Fireproofing: NO		
18		Sandblast: Skirt	Paint: Prime Skirt	
19		Manhole / Hinged (Davited) Other:		
20		Platform Clips: NO	Ladder Clips: NO	Insul. Rings: Yes
21		Pipe Supports:		
22		Wind Load:	Seismic:	
23		Wt. Empty lb	Wt Full of Water lb	

		Item	Thickness	Mat'l Class	Mat'l - Minimum Quality
24	MATERIALS				
25		Shell	in.		Titaniumclad
26		Heads	in.		" "
27		Lining	in.		
28			in.		
29			in.		
30		Nozzle Necks			Titaniumclad
31		Flanges			" Faced
32		Coupling			"
33		M.H. Cover			" Faced
34		Supports			Steel
35		Bolts/Studs			
36		Nuts			
37		Gaskets			

	NOZZLE SCHEDULE	Service	Mark	No.	Size	Rating	Face	Type
38								
39		Feed	A	1	4"	150#	RF	
40		Reboiler	B	1	16"	"	"	
41		Outlet	C	1	16"	"	"	
42		Outlet	D	1	2"	"	"	
43		Vapor	E	1	14"	"	"	
44		LT	F	1	2"			
45		TR	G	1	2"			
46			H					
47			J					
48			K					
49			L					
50			M					
51			N					
52			P					
53			Q					
54			R					
55		*Nozzle to be Plugged or Blinded						

VESSEL SKETCH

8'-6" Dia
12'-0" BL-BL
F&D Top Head
Cone Bottom (45°)
Skirt 10' to Top of Cone

For Further Details, See Sheet No.

SPEC. BY EFH	DOW THE DOW CHEMICAL COMPANY	1100	EQUIP. NO. V-1
CHECKED:	SERVICE SULFATE EVAPORATOR	VERTICAL VESSEL SPECIFICATIONS	
APP'D:			
DATE: 2/14/74	REVISION DATE A B C	SPEC. NO.	
VENDOR TO COMPLETE ALL INFORMATION MARKED _____	SHEET OF		

25840 3-68

PLANT	Coal - Pyritic Sulfur Removal		FILE/JOB NO. 7[illegible]-23
LOCATION		BLDG. NO.	CHARGE NO.
MANUFACTURER		NO. UNITS 1 per Train	B/M NO.
			P. O. NO.

FIELD ERECTED YES (NO) | NO. UNITS | TOTAL VOLUME 3000 GAL

1	DESIGN DATA	Operating Pressure psig	0
2		Operating Temperature °F	212
3		Liquid Specific Gravity	1.2
4		Contents Lethal	Yes (No)
5		Design Pressure psig	25
6		Design Temperature °F	250
7			
8			
9		Hydrostatic Test psig	40
10		Shell / Heads Corr. Allow. in.	
11		Shell / Heads Joint Eff. %	
12		Code:	Stamp (Yes) No
13		Radiograph: NO	Stress Relieve: NO
14		National Board No.	
15		Type Supports: Legs	
16		Insulation: 1"	
17		Fireproofing: NO	
18		Sandblast: NO	Paint: NO
19		Manhole 1 Hinged (Davit)	Other:
20		Platform Clips: NO	Ladder Clips: NO / Insul. Rings: Yes
21		Pipe Supports:	
22		Wind Load:	Seismic:
23		Wt. Empty lb	Wt Full of Water lb

		Item	Thickness	Mat'l Class	Mat'l - Minimum Quality
24	MATERIALS				
25		Shell	in.		Steel
26		Heads	in.		" "
27		Lining	3/16 in.		Neoprene
28			in.		
29			in.		
30		Nozzle Necks			Steel Neo Lining
31		Flanges			" " Face
32		Coupling			None
33		M.H. Cover			Steel Neo Face
34		Supports			Steel
35		Bolts/Studs			
36		Nuts			
37		Gaskets			

		Service	Mark	No.	Size	Rating	Face	Type
38	NOZZLE SCHEDULE							
39		Agitator	A	1	12"	150#	FF	
40		Steam	B	1	4"	"	"	
41		Vent	C	1	2"	"	"	
42		Water	D	1	3"	"	"	
43		Cake	E	1	10"	"	"	
44		TE	F	1	2"	"	"	
45		Outlet	G	1	4"	"	"	
46		LT	H	1	2"	"	"	
47		Filtrate	J	1	2"	"	"	
48		Manhole	K	1	20"	25#	"	
49			L					
50			M					
51			N					
52			P					
53			Q					
54			R					
55		*Nozzle to be Plugged or Blinded						

VESSEL SKETCH

8'-0" Dia 8'-0" BL-BL
FAD Heads

For Further Details, See Sheet No.

SPEC. BY EFH	THE DOW CHEMICAL COMPANY	1100	EQUIP. NO. V-2
CHECKED:	SERVICE RESLURRY TANK	VERTICAL VESSEL SPECIFICATIONS	
APP'D:			
DATE: 8/14/74	REVISION DATE A B C	SPEC. NO.	
VENDOR TO COMPLETE ALL INFORMATION MARKED _____	SHEET OF		

25840 3-68

PLANT	Coal- Pyritic Sulfur Removal		FILE/JOB NO. 730623
LOCATION		BLDG. NO.	CHARGE NO.
MANUFACTURER		NO. UNITS 1 per Train	B/M NO.
			P. O. NO.
DUTY/UNIT 26,188,700 BTU/HR	NO. UNITS 1	SHELLS/UNIT 1	TEMA SIZE/TYPE

1	TYPE	Horiz. (Vert.) Sloped ° to horiz.	(FTSwith Exp. Joint)	U-Tube	Kettle	Coil	Hairpin	Box
2		Floating Hd.-Pull Thru-Clamp Ring-Packed	(Thermosyphon)	Fintube	Other:			

3	PERFORMANCE OF ONE UNIT	Additional Proc. Data on Sheet No.		Inlet - SHELL SIDE - Outlet		Inlet - TUBE SIDE - Outlet		
4		Fluid		(2) Steam (93)		Naphtha & Sulfur		
5		Total Flow	lb/hr	30190		1,387,628		
6		Liquid	lb/hr		30190		1250665	
7		Density	lb/cu ft					
8		Viscosity	CS-CP					
9		Specific Heat	Btu/lb-°F					
10		Thermal Conductivity	Btu/hr-sq ft-°F/ft					
11		Vapor	lb/hr	30190			138963	
12		Mol Wt Density	lb/cu ft					
13		Viscosity	CS-CP					
14		Specific Heat	Btu/lb-°F					
15		Thermal Conductivity	Btu/hr-sq ft-°F/ft					
16		Latent Heat	Btu/lb					
17		Non-Condensables	lb/hr		M.W. =		M.W. =	
18		Velocity Max./Min.	ft/sec					
19		Norm. Max. Operating Temp.	°F	353 360	353 360	250	250	
20		Operating Press. (Inlet)	psig	125				
21		Pressure Drop	psi	Allow. 5	Calc.	Allow	Calc.	
22		Film Coeff.	BTU/Hr. Sq. Ft.					
23		Fouling Resistance,	hr-sq ft-°F/Btu:					
24		Over-all Coefficient- "U"	Btu/hr-sq ft. °F; Clean	Service 150		LMTD (Corrected) 103	°F	
25		Installed Area/Unit 1700	sq ft (Outside) Including-Excluding Area in tube sheets.					

26	DESIGN DATA PER SHELL		SHELL SIDE	TUBE SIDE	Shell ID (Approximate)	in.
27		Design Temperature °F	350	250	No. Tubes (Approximate) 540	
28		Design Pressure psig	50	50	Tube OD 1 in.	Tube Gage 12 BWG
29		Hydrostatic Test psig	75	75	Tube Length 12	ft
30		Corrosion Allow./Lining in.			Tube Pitch △ □ ◇ X	in.
31		Number of Passes	1	1	Joint	
32		Insulation	1"	1"	Make/Type Fintubes	
33		Cross Baffles: Type ; Segment Cut %			No. Fins per tube;	per in.
34		Number ; Spacing Approx. Equal - See Sheet No.			Fin Height in.	Fin Thick. in.
35		Provide in. Horizontal Cut on Bottom for Condensate Drain			Vessel Supports (Saddles) Lugs Other;	
36		Long Baffles: Type ; Number			Weir Height in.; Shell After Weir	in.
37		Impingement Baffle (Yes) No	Condensate Lift Yes - (No)	Removable Bundle Yes - (No)	Cathodic Protection Yes - (No)	
38		TEMA Class	Lethal Yes - (No)	Code (ASME) National Board Other:		Stamp (Yes) No
39		Spot Radiograph: (No) Shell Shell Cover Channel		Stress Relieve: (No) Shell Shell Cover Channel Floating Head		
40		Weight Complete Empty/Full of Water / lb			Weight Bundle Only lb	
41		Sandblast: NO	Paint: NO	Maintain	Shell ID Tube Count	Installed Area+ %- %

42	NOZZLES PER SHELL		SHELL SIDE				TUBE SIDE					MATERIAL SPECIFICATIONS	
43		Service	Mk	Size	Rtg	Face	Type	Mk	Size	Rtg	Face	Type	Tubes 304	Chan. Noz. Necks 304
44		Inlet	92	8	150	RF			8"	150	RF		Stat Tube Sheet 304	Chan. Noz. Flanges 304 Faced
45		Outlet	93	4	"	"			16	"	"		Fltg. Tube Sheet	Channel Flanges 304 Faced
46		Drain											Cross Baf./Tube Sup. Steel	Fltg. Head
47		Vent											Long Baffles	Fltg. Hd. Flange
48													Impinge. Baffle Steel	Clamp Ring
49													Weir/Lift Yes	Bolts/Studs
50													Tie Rods & Spacers Steel	Nuts
51													Shell Steel	Vessel Supports
52													Shell Cover "	GASKETS & PACKING
53		See Nozzle Sketch on Sheet No.											Channel 304	Shell Cover
54	CONN.	Shell Side:			Parallel Banks of				Shells In Series				Ch. Cover/Bonnet 304	Shell-Chan. Side
55		Tube Side:			Parallel Banks of				Shells In Series				Shell Noz. Necks Steel	Channel
56		Stacked:			Wide				High				Shell Noz. Flanges Steel	Channel Cover
													Shell Flanges Steel	Fltg. Hd.

SPEC. BY EFH	THE DOW CHEMICAL COMPANY	1400	EQUIP. NO. E-1
CHECKED:	SERVICE SOLVENT EVAPORATOR REBOILER	HEAT EXCHANGER SPECIFICATIONS	
APP'D:			
DATE: 2/8/74	REVISION DATE A B C	SPEC. NO.	
VENDOR TO COMPLETE ALL INFORMATION MARKED _____	SHEET OF		

17180 2-68

PLANT	Coal - Pyritic Sulfur Removal		FILE/JOB NO. 72CE23
LOCATION	BLDG. NO.		CHARGE NO.
MANUFACTURER	NO. UNITS 1 per Train		B/M NO.
			P. O. NO.
DUTY/UNIT 8,198,300 BTU/HR	NO. UNITS 1	SHELLS/UNIT 1	TEMA SIZE/TYPE

TYPE

1. Horiz. (Vert.) Sloped ° to horiz. (FTS) with Exp. Joint U-Tube Kettle Coil Hairpin Box
2. Floating Hd.-Pull Thru-Clamp Ring-Packed Thermosyphon Fintube Other:

PERFORMANCE OF ONE UNIT

			SHELL SIDE Inlet	SHELL SIDE Outlet	TUBE SIDE Inlet	TUBE SIDE Outlet
3	Additional Proc. Data on Sheet No.					
4	Fluid		(75) Naphtha & Sulfur (76)		(72) Naphtha & Sulfur (74)	
5	Total Flow	lb/hr	203,559		139,411	
6	Liquid	lb/hr		61,292	139411	139411
7	Density	lb/cu ft			139411	139411
8	Viscosity	CS-CP				
9	Specific Heat	Btu/lb-°F				
10	Thermal Conductivity	Btu/hr-sq ft-°F/ft				
11	Vapor	lb/hr	203559	142667		
12	Mol Wt Density	lb/cu ft				
13	Viscosity	CS-CP				
14	Specific Heat	Btu/lb-°F				
15	Thermal Conductivity	Btu/hr-sq ft-°F/ft				
16	Latent Heat	Btu/lb				
17	Non-Condensables	lb/hr		M.W. =		M.W. =
18	Velocity Max./Min.	ft/sec				
19	Norm. / Max. Operating Temp.	°F	250	247	165	246
20	Operating Press. (Inlet)	psig	25		30	
21	Pressure Drop	psi	Allow. 2	Calc.	Allow 5	Calc.
22	Film Coeff.	BTU/Hr. Sq. Ft.				
23	Fouling Resistance,	hr-sq ft-°F/Btu;				
24	Over-all Coefficient- "U"	Btu/hr-sq ft. °F; Clean	Service 150		LMTD (Corrected) 25.7 °F	
25	Installed Area/Unit 2,126	sq ft (Outside) Including-Excluding Area in tube sheets.				

DESIGN DATA PER SHELL

		SHELL SIDE	TUBE SIDE		
26				Shell ID (Approximate)	in.
27	Design Temperature °F	250	250	No. Tubes (Approximate) 309	
28	Design Pressure psig	50	50	Tube OD 1 in.	Tube Gage 11 BWG
29	Hydrostatic Test psig	75	75	Tube Length 8M	26 ft
30	Corrosion Allow./Lining in.			Tube Pitch △ □ ◇ △	in.
31	Number of Passes	1	As req'd	Joint	
32	Insulation	1"	1"	Make/Type Fintubes	
33	Cross Baffles: Type	; Segment Cut %		No. Fins per tube;	per in.
34	Number ; Spacing Approx. Equal - See Sheet No.			Fin Height in.	Fin Thick. in.
35	Provide in. Horizontal Cut on Bottom for Condensate Drain			Vessel Supports Saddles - Lugs Other;	
36	Long Baffles: Type ; Number			Weir Height in.; Shell After Weir	in.
37	Impingement Baffle (Yes) No	Condensate Lift Yes (No)	Removable Bundle Yes (No)	Cathodic Protection Yes (No)	
38	TEMA Class	Lethal Yes (No)	Code (ASME) National Board Other:	Stamp (Yes) - No	
39	Spot Radiograph: No Shell Shell Cover Channel		Stress Relieve: No Shell Shell Cover Channel	Floating Head	
40	Weight Complete Empty/Full of Water	/	lb	Weight Bundle Only	lb
41	Sandblast: No	Paint: No	Maintain	Shell ID Tube Count	Installed Area+ %- %

NOZZLES PER SHELL

	SHELL SIDE Service	Mk	Size	Rtg	Face	Type	TUBE SIDE Mk	Size	Rtg	Face	Type
42											
43											
44	Inlet	75	12"	150	RF		64	8"	150	RF	
45	Outlet	76	10"	150	"		65	8"	"	"	
46	Drain	–					–				
47	Vent	–					–				
48											
49											
50											
51											
52											
53	See Nozzle Sketch on Sheet No.										

CONN.

54. Shell Side: Parallel Banks of Shells In Series
55. Tube Side: Parallel Banks of Shells In Series
56. Stacked: Wide High

MATERIAL SPECIFICATIONS

Tubes	304	Chan. Noz. Necks	304
Stat Tube Sheet	"	Chan. Noz. Flanges	304 Face
Flig. Tube Sheet		Channel Flanges	"
Cross Baf./Tube Sup.	"	Flig. Head	
Long Baffles		Flig. Hd. Flange	
Impinge. Baffle	"	Clamp Ring	
Weir/Lift		Bolts/Studs	
Tie Rods & Spacers	"	Nuts	
Shell	"	Vessel Supports	
Shell Cover	"	GASKETS & PACKING	
Channel	"	Shell Cover	
Ch. Cover/Bonnet	"	Shell-Chan. Side	
Shell Noz. Necks	"	Channel	
Shell Noz. Flanges	304 Face	Channel Cover	
Shell Flanges	" "	Flig. Hd.	

SPEC. BY EFH	THE DOW CHEMICAL COMPANY	1400	EQUIP. NO. E-2
CHECKED:	SERVICE SOLVENT EVAP FEED/OHEAD EXCH	HEAT EXCHANGER SPECIFICATIONS	
APP'D:			
DATE: 2/8/74	REVISION DATE A B C	SPEC. NO.	
VENDOR TO COMPLETE ALL INFORMATION MARKED _____	SHEET OF		

17180 2-68

PLANT	Coal- Pyritic Sulfur Removal		FILE/JOB NO. 731623
LOCATION		BLDG. NO.	CHARGE NO.
MANUFACTURER		NO. UNITS 1 per train	B/M NO.
			P. O. NO.
DUTY/UNIT 17,930,700 BTU/HR	NO. UNITS 1	SHELLS/UNIT 1	TEMA SIZE/TYPE

TYPE

1 (Horiz) Vert. Sloped ° to horiz. (FT) Swith Exp. Joint U-Tube Kettle Coil Hairpin Box

2 Floating Hd.-Pull Thru-Clamp Ring-Packed Thermosyphon Fintube Other:

PERFORMANCE OF ONE UNIT

			Inlet - SHELL SIDE - Outlet		Inlet - TUBE SIDE - Outlet	
3	Additional Proc. Data on Sheet No.					
4	Fluid		(64) Water	(65)	(76) Naphtha	(58)
5	Total Flow	lb/hr				
6	Liquid	lb/hr				
7	Density	lb/cu ft	1.0			
8	Viscosity	CS-CP				
9	Specific Heat	Btu/lb-°F	1.0			
10	Thermal Conductivity	Btu/hr-sq ft-°F/ft				
11	Vapor	lb/hr				
12	Mol Wt Density	lb/cu ft				
13	Viscosity	CS-CP				
14	Specific Heat	Btu/lb-°F				
15	Thermal Conductivity	Btu/hr-sq ft-°F/ft				
16	Latent Heat	Btu/lb				
17	Non-Condensables	lb/hr		M.W. =		M.W. =
18	Velocity Max./Min.	ft/sec				
19	Norm. / Max. Operating Temp.	°F	85	105	247	247
20	Operating Press. (Inlet)	psig				
21	Pressure Drop	psi	Allow. 5.	Calc.	Allow 2	Calc.
22	Film Coeff.	BTU/Hr. Sq. Ft.				
23	Fouling Resistance,	hr-sq ft-°F/Btu;				
24	Over-all Coefficient "Uo"	Btu/hr-sq ft. °F; Clean	Service 200		LMTD (Corrected) 152	°F
25	Installed Area/Unit	590 sq ft (Outside) Including-Excluding Area in tube sheets				

DESIGN DATA PER SHELL

		SHELL SIDE	TUBE SIDE		
26				Shell ID (Approximate)	in.
27	Design Temperature °F	150	150	No. Tubes (Approximate) 87	
28	Design Pressure psig	50	50	Tube OD 1 in.	Tube Gage 11 BWG
29	Hydrostatic Test psig	75	75	Tube Length 8M 26.24	ft
30	Corrosion Allow./Lining in.			Tube Pitch △□◇ △	in.
31	Number of Passes			Joint	
32	Insulation	NO	NO	Make/Type Fintubes	

33 Cross Baffles: Type ; Segment Cut %; No. Fins per tube; per in.

34 Number ; Spacing Approx. Equal - See Sheet No.; Fin Height in.; Fin Thick. in.

35 Provide in. Horizontal Cut on Bottom for Condensate Drain; Vessel Supports Saddles - Lugs Other;

36 Long Baffles: Type ; Number; Weir Height in.; Shell After Weir in.

37 Impingement Baffle Yes-(No); Condensate Lift Yes-(No); Removable Bundle Yes-(No); Cathodic Protection Yes-(No)

38 TEMA Class; Lethal Yes-(No); Code (ASME) National Board Other; Stamp (Yes)-No

39 Spot Radiograph: N/ Shell Shell Cover Channel; Stress Relieve: NO Shell Shell Cover Channel Floating Head

40 Weight Complete Empty/Full of Water / lb; Weight Bundle Only lb

41 Sandblast: Yes; Paint: Prime; Maintain Shell ID Tube Count Installed Area+ %- %

NOZZLES PER SHELL

		SHELL SIDE					TUBE SIDE				
42	Service	Mk	Size	Rtg	Face	Type	Mk	Size	Rtg	Face	Type
43	Inlet	64	8"	150	RF		76	10"	150	RF	
44	Outlet	65	8"	"	"		58	8"	"	"	
45	Drain	–					–				
46	Vent	–					–				
47											
48											
49											
50											
51											
52											

53 See Nozzle Sketch on Sheet No.

CONN.

54 Shell Side: Parallel Banks of Shells in Series

55 Tube Side: Parallel Banks of Shells in Series

56 Stacked: Wide High

MATERIAL SPECIFICATIONS

Tubes	304	Chan. Noz. Necks	304
Stat Tube Sheet	"	Chan. Noz. Flanges	304 Face
Flg. Tube Sheet		Channel Flanges	" Face
Cross Baf./Tube Sup.	Steel	Flg. Head	
Long Baffles		Flg. Hd. Flange	
Impinge. Baffle		Clamp Ring	
Weir/Lift		Bolts/Studs	
Tie Rods & Spacers	Steel	Nuts	
Shell	Steel	Vessel Supports	
Shell Cover	"	GASKETS & PACKING	
Channel	304	Shell Cover	
Ch. Cover/Bonnet	"	Shell-Chan. Side	
Shell Noz. Necks	Steel	Channel	
Shell Noz. Flanges	Steel	Channel Cover	
Shell Flanges	Steel	Flg. Hd.	

SPEC. BY EFH	THE DOW CHEMICAL COMPANY	1400	EQUIP. NO. E-3
CHECKED:	SERVICE SOLVENT EVAP CONDENSER	HEAT EXCHANGER SPECIFICATIONS	
APP'D:			
DATE: 2/8/74	REVISION DATE A B C	SPEC. NO.	
VENDOR TO COMPLETE ALL INFORMATION MARKED _____	SHEET OF		

17150 2-66

PLANT: Coal - Pyritic Sulfur Removal	FILE/JOB NO. 730623
LOCATION / BLDG. NO.	CHARGE NO.
MANUFACTURER / NO. UNITS: 1 per Train	B/M NO.
	P. O. NO.
DUTY/UNIT: 14,429,700 BTU/HR; NO. UNITS: 1; SHELLS/UNIT: 1	TEMA SIZE/TYPE

TYPE

1. Horiz. (Vert.) Sloped ° to horiz. FTS-with Exp. Joint U-Tube Kettle Coil Hairpin Box
2. Floating Hd.-Pull Thru-Clamp Ring-Packed Thermosyphon Fintube Other:

PERFORMANCE OF ONE UNIT

		Inlet - SHELL SIDE - Outlet		Inlet - TUBE SIDE - Outlet	
3	Additional Proc. Data on Sheet No.				
4	Fluid	(62) Water	(63)	Naphtha	(36)
5	Total Flow lb/hr			136,147	
6	Liquid lb/hr			136,147	136,147
7	Density lb/cu ft				
8	Viscosity CS-CP				
9	Specific Heat Btu/lb-°F				
10	Thermal Conductivity Btu/hr-sq ft-°F/ft				
11	Vapor lb/hr				
12	Mol Wt Density lb/cu ft				
13	Viscosity CS-CP				
14	Specific Heat Btu/lb-°F				
15	Thermal Conductivity Btu/hr-sq ft-°F/ft				
16	Latent Heat Btu/lb				
17	Non-Condensables lb/hr	M.W. =		M.W. =	
18	Velocity Max./Min. ft/sec				
19	Norm. Max. Operating Temp. °F	85	105	248	160
20	Operating Press. (Inlet) psig	50		5	
21	Pressure Drop psi	Allow. 5	Calc.	Allow 2	Calc.
22	Film Coeff. BTU/Hr. Sq. Ft.				
23	Fouling Resistance, hr-sq ft-°F/Btu:				
24	Over-all Coefficient- "U" Btu/hr-sq ft. °F; Clean	Service 75		LMTD (Corrected) 105 °F	
25	Installed Area/Unit 1832 sq ft (Outside) Including-Excluding Area in tube sheets.				

DESIGN DATA PER SHELL

		SHELL SIDE	TUBE SIDE		
26				Shell ID (Approximate)	in.
27	Design Temperature °F	150	250	No. Tubes (Approximate) 267	
28	Design Pressure psig	50	50	Tube OD 1 in.	Tube Gage 12 BWG
29	Hydrostatic Test psig	75	75	Tube Length 8M 26.24	ft
30	Corrosion Allow./Lining in.			Tube Pitch △□◇ △	in.
31	Number of Passes			Joint	
32	Insulation	NO	NO	Make/Type Fintubes	
33	Cross Baffles: Type ; Segment Cut %			No. Fins per tube;	per in.
34	Number ; Spacing Approx. Equal - See Sheet No.			Fin Height in.	Fin Thick. in.
35	Provide in. Horizontal Cut on Bottom for Condensate Drain			Vessel Supports Saddles - Lugs Other;	
36	Long Baffles: Type ; Number			Weir Height in.; Shell After Weir	in.

37. Impingement Baffle Yes-No | Condensate Lift Yes - No | Removable Bundle Yes - No | Cathodic Protection Yes - No
38. TEMA Class | Lethal Yes - (No) | Code (ASME) National Board Other: | Stamp Yes - (No)
39. Spot Radiograph: No Shell Shell Cover Channel | Stress Relieve: No Shell Shell Cover Channel Floating Head
40. Weight Complete Empty/Full of Water / lb | Weight Bundle Only lb
41. Sandblast: Yes | Paint: Prime | Maintain Shell ID Tube Count Installed Area+ %- %

NOZZLES PER SHELL

	SHELL SIDE						TUBE SIDE					
42												
43	Service	Mk	Size	Rtg	Face	Type	Mk	Size	Rtg	Face	Type	
44	Inlet	62	8"	150	RF		–	6"	150	RF		
45	Outlet	63	8"	"	"		36	6	"	"		
46	Drain											
47	Vent											
48												
49												
50												
51												
52												
53	See Nozzle Sketch on Sheet No.											

CONN.

54. Shell Side: Parallel Banks of Shells In Series
55. Tube Side: Parallel Banks of Shells In Series
56. Stacked: Wide High

MATERIAL SPECIFICATIONS

Tubes	304	Chan. Noz. Necks	304
Stat Tube Sheet	304	Chan. Noz. Flanges	304 Faced
Fltg. Tube Sheet		Channel Flanges	304 "
Cross Baf./Tube Sup.	Steel	Fltg. Head	
Long Baffles		Fltg. Hd. Flange	
Impinge. Baffle		Clamp Ring	
Weir/Lift		Bolts/Studs	
Tie Rods & Spacers		Nuts	
Shell	Steel	Vessel Supports	
Shell Cover		GASKETS & PACKING	
Channel	Steel	Shell Cover	
Ch. Cover/Bonnet	304	Shell-Chan. Side	
Shell Noz. Necks	[illegible]	Channel	
Shell Noz. Flanges	"	Channel Cover	
Shell Flanges	"	Fltg. Hd.	

SPEC. BY: EFH	THE DOW CHEMICAL COMPANY	1400	EQUIP. NO. E-4
CHECKED:	SERVICE: SOLVENT COOLER	HEAT EXCHANGER SPECIFICATIONS	
APP'D:			
DATE: 2/8/74	REVISION DATE A B C	SPEC. NO.	
VENDOR TO COMPLETE ALL INFORMATION MARKED _____	SHEET OF		

17180 2-66

PLANT	Coal - Pyritic Sulfur Removal		FILE/JOB NO. 73C623
LOCATION		BLDG. NO.	CHARGE NO.
MANUFACTURER		NO. UNITS 1 per train	B/M NO.
			P. O. NO.
MODEL/TYPE		NO. UNITS OPERATING 1 per train	SPARES None

OPERATIONAL PERFORMANCE

		(73) FEED	(73) FILTRATE	BACKWASH	CAKE
Fluid		Naphtha	Naphtha	Naphtha	Coal
Flow-Process Basis	lb/hr	158,806	158,806	14,000	Neg
Flow-Filter Basis	lb/hr				
Density	lb/cu ft	0.67 sp gr.			
Viscosity	centipoise				
pH					
Solids in Stream	vol.% (wt.%)	1			
Particle Size (Avg.)	microns	37			
Normal / Max. Oper. Press.	psig	65 / 65			
Normal / Max. Oper. Temp.	°F	160 / 160			
Allowable Pressure Drop	psi	10			

Maximum Cake Volume: Type Discharge: Wet Cake-Dry Cake

Cycle: Precoat Preparation Time — ; Precoating Time

Filter Aid Preparation Time — ; Filter Aid Application Time

Filtering Time continuous ; Blowdown Time

Cleaning/Backwash Time

Total Time Between Successive Filter Cycles

Instrumentation: (Manual)-Semi Automatic-Automatic

DESIGN

		Filter Shell	Feeder Tank	Filtrate Tank	Code:
Design Pressure	psig	125			Stamp Required: Yes (No)
Design Temperature	°F	200			Radiograph:
Hydrostatic Test	psig	200			Stress Relieve:
Corr. Allow./Lin.-Shell / Heads	in.	0 / 0			Special Design:
Joint Efficiency-Shell / Heads	%				
Insulation		1"			National Board No.

Electrical Construction: Standard Open Weatherproof Explosion Proof

Other:

Piping, Valves, Fittings Supplied with Filter to be in Accordance with: Not Req'd

CONSTRUCTION DETAILS

Filter Tank: Horizontal - Vertical: Size None in. IDx in. Tan to Tan; Type Heads

Elements: Area/Element sq ft; No. Req'd ; in. IDx in. ODx in. Length

Leaves: Area/Leaf sq ft; No. Req'd ; Leaf Height in.; Leaf Spacing in.

Element or Leaf Pore Size (Avg.) microns; Minimum Particle Size Retained microns

Maximum Cake Thickness in; Gross Filter Volume gal-cu ft; Heel Volume gal - cu ft

Precoat Req'd: Yes - (No) Material

Filteraid Req'd: Yes - (No) Material Filter Fabric: Material 304 ; Mesh 400

Feed Pump Furnished by Owner ; Make ; Model ; Max. Flow gpm at psig

Mat'l (Wetted Parts) ; Type Seal ; See Pump Spec No.

Other Accessories:

Package Unit (Yes) - No; Shop Assembled on Skids (Yes) - No; Floor Space Req'd ft x ft; Height ft

Weight Empty/Full of Water / lb; Shipping Weight lb.

NOZZLE SCHEDULE

Service	Mark	No.	Size	Rtg.	Face	Type
Inlet	A					
Outlet	B					
Vent	C					
Drain	D					
Relief Valve	E					
Pressure Gage	F					
Quick Open Cover	G					
	H					
	J					
	K					

See Nozzle Sketch on Sheet No.

MATERIALS

Item	Thickness	Mat'l Class	Mat'l-Minimum Quality
Filter Heads	in.		304
Filter Shell	in.		304
Lining	in.		304
	in.		
Elements			
Leaves			
M.H. Cover			
Bolts/Studs			
Nuts			
Gaskets			

SPEC. BY EFH	THE DOW CHEMICAL COMPANY	1400	EQUIP. NO. F-1
CHECKED:	SERVICE SOLVENT EVAP FEED FILTER	FILTER SPECIFICATIONS	
APP'D:			
DATE: 2/7/74	REVISION DATE A B C	SPEC. NO.	
VENDOR TO COMPLETE ALL INFORMATION MARKED	SHEET OF		

25660 3-68

PLANT	Coal- Pyritic Sulfur Removal		FILE/JOB NO. 730623
LOCATION		BLDG. NO.	CHARGE NO.
MANUFACTURER		NO. UNITS 1 per Train	B/M NO.
			P.O. NO.

MODEL 4x6-13 NO. UNITS ASA PUMP ☐ YES ☐ NO ASA DESIGNATION

1	SERVICE CONDITIONS	Liquid Pumped Naphtha (Traces Sulfur)		Max. Capacity at P.T. 845	gpm
2		Pumping Temperature (P.T.) 160 °F		Discharge Pressure 65 psia	ft.
3		Specific Gravity at P.T. .67		Suction Pressure 20 psia	ft.
4		Viscosity at P.T. cs-cp		Differential Pressure 45 psi	
5		Vapor Pressure at P.T.		Differential Head 155	ft.
6		Corrosion or Erosion Factors:		NPSH Available	ft.
7				NPSH Required (Water)	ft.
8	CONSTRUCTION DETAILS	Arrangement: (Horiz)-Vert.-In Line		Suction (Single)- Double	
9		Direction of Rotation Facing Pump Coupling: CW - CCW		Speed: 1750	rpm
10		Case: Design Pressure psig		Number of Stages 1 ;Shut-Off Pressure	ft.
11		Max. Allow. Working Press. psig		Volumetric Efficiency at Rating	%
12		Split: Horiz-Vert-Barrel		Impeller Type	
13		Impeller Diameter: Supplied 12½ inches;		Maximum 13 inches; Minimum 9	inches
14		Vent and Drain Tapped: Yes - No		Bearings: Thrust Type	
15		Nozzles / Size / Rating / Facing / Location		Radial Type	
16		Suction 6"		Lubrication on Bearings; Oil - Grease	
17		Discharge 4"		Oiler: Yes - No; Type	
18		Vents		Coupling: Yes - No; Mfr.	
19		Drains		Coupling Guard: Yes - No	
20		Cooling H_2O		Baseplate: Yes - No; Type	
21		Water Cooling: Casing-Stuff. Box-Bearings-Pedestal-Gland-(None)		Total Water Required:	gpm
22		Smothering Gland: Yes - (No)		Lubrication on Stuffing Box: Oil-Grease-None	
23		Packing: Yes - (No) Type		Sealing Oil Connection: Yes - No	
24		Mechanical Seal: (Yes) - No; Furnished by; Vendor		; Mfr. Type	
25		Single - Double-Inside-Outside-Balanced-Unbalanced			
26		Rotary Unit ; Seal Ring		; Face Material ; Shaft Packing	
27		Insert ; Reversible: Yes - No		; Face Material	
28		Insert Mounting: Clamped In - "O" Ring - Press Fit			
29		Gland ; Plain: Yes - No		Throttle Bushing Carbon: Yes - No ; Other	
30		Gland/Stuffing Box Machined & Tapped for: Dead - End Lub. - Circulating Lub. - Quenching - Vent & Drain			
31		Flushing Seal Faces with Discharge Bypass - Flushing Seal Faces with External Fluid			
32		Auxiliary Stuffing Box Req'd: Yes - (No)			
33		Weight of Pump		lb; Weight of Base	lb
34		Weight of Driver		lb; Shipping Weight	lb
35	MATERIALS	Casing & Covers: 316		Shaft: 316	
36		Casing Wear Rings: "		Shaft Sleeves:	
37		Impeller: "		Lantern Rings:	
38		Impeller Wear Rings: "		Glands:	
39		Stuffing Box Bushings: "		Gaskets:	
40	DRIVER	Furnished by: Vendor ; Type (Elec. Motor) - Steam Turbine - Other		(Direct) - Gear - Belt	
41		Electric Motor: Make Mounted by Vendor		Steam Turbine: Make Mounted by	
42		Enclosure SF Temp Rise °C		Model:	
43		Insulation Frame		Horsepower hp ; Speed	rpm
44		Estimated BHP Req'd. 50 hp		Inlet Steam Press., psig: Normal ; Max	
45		Nominal Motor Size (Non-overloading) 50 hp		Inlet Steam Temp., °F: Normal ; Max.	
46		Speed 1750 rpm		Water Rate:	lb/hr
47		Volts 440 ; Phase 3 ; Cycle 60		Vacuum (If any)	mm - in. Hg - psia
48		Speed Reducer: Integral - Separate		Back Pressure	psig
49		Mfr. Ratio		Nozzles / Size / Rating / Facing / Location	
50		Model Class		Inlet	
51		See Driver Specification No.		Exhaust	
52	TESTS	Performance Curve: (Yes) - No; Curve No.	MISC.	Serial Number	
53		Certified: Yes - (No)		Outline Drawing	
54		Hydrostatic Test: (Yes) - No; Pressure psig		Cross Section Drawing	
55		Shop Inspection: Yes - (No)		Bulletin No. Page No.	

SPEC. BY EFH	DOW THE DOW CHEMICAL COMPANY	1400	EQUIP. NO. P-1A-B
CHECKED:	SERVICE	CENTRIFUGAL PUMP SPECIFICATIONS	
APP'D:	SOLVENT EVAP FEED PUMP		
DATE: 2/7/74	REVISION DATE A B C	SPEC. NO.	
VENDOR TO COMPLETE ALL INFORMATION MARKED _____	SHEET OF		

18370D 4/73

PLANT	Coal- Pyritic Sulfur Removal		FILE/JOB NO. 73C623
LOCATION		BLDG. NO.	CHARGE NO.
MANUFACTURER		NO. UNITS 2 per Train	B/M NO.
			P.O. NO.

MODEL 3x4-13 NO. UNITS ASA PUMP ☒ YES ☐ NO ASA DESIGNATION

1	SERVICE CONDITIONS	Liquid Pumped Naphtha	Max. Capacity at P.T. 429 gpm	
2		Pumping Temperature (P.T.) 160 °F	Discharge Pressure 98 psia	ft.
3		Specific Gravity at P.T. 0.67	Suction Pressure 19 psia	ft.
4		Viscosity at P.T. cs-cp	Differential Pressure 19 psi	
5		Vapor Pressure at P.T.	Differential Head 65	ft.
6		Corrosion or Erosion Factors:	NPSH Available	ft.
7			NPSH Required (Water)	ft.
8	CONSTRUCTION DETAILS	Arrangement: (Horiz.) Vert.-In Line	Suction (Single) Double	
9		Direction of Rotation Facing Pump Coupling: CW - CCW	Speed: 1750	rpm
10		Case: Design Pressure psig	Number of Stages 1 ; Shut-Off Pressure	ft.
11		Max. Allow. Working Press. psig	Volumetric Efficiency at Rating	%
12		Split: Horiz-Vert-Barrel	Impeller Type	
13		Impeller Diameter: Supplied 9" inches;	Maximum 13 inches; Minimum 9	inches
14		Vent and Drain Tapped: Yes - No	Bearings: Thrust Type	
15		Nozzles / Size / Rating / Facing / Location	Radial Type	
16		Suction 4"	Lubrication on Bearings; Oil - Grease	
17		Discharge 3"	Oiler: Yes - No; Type	
18		Vents	Coupling: Yes - No; Mfr.	
19		Drains	Coupling Guard: Yes - No	
20		Cooling H_2O	Baseplate: Yes - No; Type	
21		Water Cooling: Casing-Stuff. Box-Bearings-Pedestal-Gland-(None)	Total Water Required:	gpm
22		Smothering Gland: Yes (No)	Lubrication on Stuffing Box: Oil-Grease-None	
23		Packing: Yes -(No) Type	Sealing Oil Connection: Yes - No	
24		Mechanical Seal: Yes (No) Furnished by: Vendor	; Mfr. Type	
25		Single - Double-Inside-Outside-Balanced-Unbalanced		
26		Rotary Unit ; Seal Ring	; Face Material ; Shaft Packing	
27		Insert ; Reversible: Yes - No	; Face Material	
28		Insert Mounting: Clamped In - "O" Ring - Press Fit		
29		Gland ; Plain: Yes - No	Throttle Bushing Carbon: Yes - No ; Other	
30		Gland/Stuffing Box Machined & Tapped for: Dead - End Lub. - Circulating Lub. - Quenching - Vent & Drain		
31		Flushing Seal Faces with Discharge Bypass - Flushing Seal Faces with External Fluid		
32		Auxiliary Stuffing Box Req'd: Yes - No		
33		Weight of Pump	lb; Weight of Base	lb
34		Weight of Driver	lb; Shipping Weight	lb
35	MATERIALS	Casing & Covers: 316	Shaft: 316	
36		Casing Wear Rings: #	Shaft Sleeves:	
37		Impeller: #	Lantern Rings:	
38		Impeller Wear Rings: #	Glands:	
39		Stuffing Box Bushings: #	Gaskets:	
40	DRIVER	Furnished by: Vendor ; Type (Elec. Motor) - Steam Turbine - Other	(Direct) Gear - Belt	
41		Electric Motor: Make Mounted by Vendor	Steam Turbine: Make Mounted by	
42		Enclosure- TEFC SF Temp Rise °C	Model:	
43		Insulation Frame	Horsepower hp ; Speed	rpm
44		Estimated BHP Req'd. 10 hp	Inlet Steam Press., psig: Normal ; Max	
45		Nominal Motor Size (Non-overloading) 15 hp	Inlet Steam Temp., °F: Normal ; Max.	
46		Speed 1750 rpm	Water Rate:	lb/hr
47		Volts 440 ; Phase 3 ; Cycle 60	Vacuum (If any)	mm - in. Hg - psia
48		Speed Reducer: Integral - Separate	Back Pressure	psig
49		Mfr. Ratio	Nozzles / Size / Rating / Facing / Location	
50		Model Class	Inlet	
51		See Driver Specification No.	Exhaust	
52	TESTS	Performance Curve: (Yes) - No; Curve No.	MISC. Serial Number	
53		Certified: Yes - (No)	Outline Drawing	
54		Hydrostatic Test: (Yes) - No; Pressure psig	Cross Section Drawing	
55		Shop Inspection: Yes (No)	Bulletin No. Page No.	

SPEC. BY EFH	DOW THE DOW CHEMICAL COMPANY	1400	EQUIP. NO. P-3A/B
CHECKED:	SERVICE	CENTRIFUGAL PUMP SPECIFICATIONS	
APP'D:	RECOVERED SOLVENT FEED PUMP		
DATE: 2/7/74	REVISION DATE A B C	SPEC. NO.	
VENDOR TO COMPLETE ALL INFORMATION MARKED _____	SHEET OF		

18370D 4/73

PLANT	Coal-Pyritic Sulfur Removal		FILE/JOB NO. 730623
LOCATION		BLDG. NO.	CHARGE NO.
MANUFACTURER		NO. UNITS 1 Per Train	B/M NO.
			P.O. NO.

MODEL 1x1½-8 NO. UNITS 1 ASA PUMP [X] YES [ ] NO ASA DESIGNATION

1	SERVICE CONDITIONS	Liquid Pumped: Sulfur	Max. Capacity at P.T.	60	gpm
2		Pumping Temperature (P.T.) 266 °F	Discharge Pressure psia	60	ft.
3		Specific Gravity at P.T. 2.0	Suction Pressure psia	10	ft.
4		Viscosity at P.T. 9.5 poise	Differential Pressure psi	50	
5		Vapor Pressure at P.T. 200 mm	Differential Head	50	ft.
6		Corrosion or Erosion Factors:	NPSH Available		ft.
7		Steam Jacketed - 125 psig	NPSH Required (Water)		ft.
8	CONSTRUCTION DETAILS	Arrangement: (Horiz.)-Vert.-In Line	Suction: (Single)-Double		
9		Direction of Rotation Facing Pump Coupling: CW - CCW	Speed: 1750		rpm
10		Case: Design Pressure 125 psig	Number of Stages 1 ; Shut-Off Pressure		ft.
11		Max. Allow. Working Press. 100 psig	Volumetric Efficiency at Rating		%
12		Split: Horiz-Vert-Barrel	Impeller Type		
13		Impeller Diameter: Supplied 7¼ inches;	Maximum 8 inches; Minimum 5½		inches
14		Vent and Drain Tapped: Yes - No	Bearings: Thrust Type		
15		Nozzles / Size / Rating / Facing / Location	Radial Type		
16		Suction 1½"	Lubrication on Bearings; Oil - Grease		
17		Discharge 1"	Oiler: Yes - No; Type		
18		Vents	Coupling: Yes - No; Mfr.		
19		Drains	Coupling Guard: Yes - No		
20		Cooling H_2O	Baseplate: Yes - No; Type		
21		Water Cooling: Casing-Stuff. Box-Bearings-Pedestal-Gland-None	Total Water Required:		gpm
22		Smothering Gland: Yes - No	Lubrication on Stuffing Box: Oil-Grease-None		
23		Packing: (Yes)-No; Type	Sealing Oil Connection: Yes (No)		
24		Mechanical Seal: Yes (No) Furnished by;	; Mfr. Type		
25		Single - Double-Inside-Outside-Balanced-Unbalanced			
26		Rotary Unit ; Seal Ring	; Face Material ; Shaft Packing		
27		Insert ; Reversible: Yes - No	; Face Material		
28		Insert Mounting: Clamped In - "O" Ring - Press Fit			
29		Gland ; Plain: Yes - No	Throttle Bushing Carbon: Yes - No ; Other		
30		Gland/Stuffing Box Machined & Tapped for: Dead - End Lub. - Circulating Lub. - Quenching - Vent & Drain		Jacketed	
31		Flushing Seal Faces with Discharge Bypass - Flushing Seal Faces with External Fluid			
32		Auxiliary Stuffing Box Req'd: Yes - No			
33		Weight of Pump	lb; Weight of Base		lb
34		Weight of Driver	lb; Shipping Weight		lb
35	MATERIALS	Casing & Covers: Jacket - Ductile Iron	Shaft: Steel		
36		Casing Wear Rings: " "	Shaft Sleeves:		
37		Impeller: " "	Lantern Rings:		
38		Impeller Wear Rings: " "	Glands:		
39		Stuffing Box Bushings: " "	Gaskets:		
40	DRIVER	Furnished by: ; Type (Elec. Motor) - Steam Turbine - Other		(Direct) Gear - Belt	
41		Electric Motor: Make Mounted by Vendor	Steam Turbine: Make	Mounted by	
42		Enclosure TEFC SF Temp Rise °C	Model:		
43		Insulation Frame	Horsepower hp ; Speed		rpm
44		Estimated BHP Req'd. 5 hp	Inlet Steam Press., psig: Normal	; Max	
45		Nominal Motor Size (Non-overloading) 7½ hp	Inlet Steam Temp., °F: Normal	; Max.	
46		Speed 1750 rpm	Water Rate:		lb/hr
47		Volts 440 ; Phase 3 ; Cycle 60	Vacuum (If any)		mm - in. Hg - psia
48		Speed Reducer: Integral - Separate	Back Pressure		psig
49		Mfr. Ratio	Nozzles / Size / Rating / Facing / Location		
50		Model Class	Inlet		
51		See Driver Specification No.	Exhaust		
52	TESTS	Performance Curve: (Yes)-No; Curve No.	MISC. Serial Number		
53		Certified: Yes (No)	Outline Drawing		
54		Hydrostatic Test: (Yes)-No; Pressure psig	Cross Section Drawing		
55		Shop Inspection: Yes (No)	Bulletin No.	Page No.	

SPEC. BY EFH	DOW THE DOW CHEMICAL COMPANY	1400	EQUIP. NO. P-4
CHECKED:	SERVICE	CENTRIFUGAL PUMP SPECIFICATIONS	
APP'D:	SULFUR LOADING PUMP		
DATE: 2-7-74	REVISION DATE A B C	SPEC. NO.	
VENDOR TO COMPLETE ALL INFORMATION MARKED _____	SHEET OF		

18370D 4/73

PLANT	Coal- Pyritic Sulfur Removal		FILE/JOB NO. 730623
LOCATION		BLDG. NO.	CHARGE NO.
MANUFACTURER		NO. UNITS 1 per Train	B/M NO.
			P.O. NO.

MODEL 1x1½-6 NO. UNITS ASA PUMP ☒ YES ☐ NO ASA DESIGNATION

1	SERVICE CONDITIONS	Liquid Pumped: Naphtha	Max. Capacity at P.T.: 10 gpm	
2		Pumping Temperature (P.T.): Ambient °F	Discharge Pressure psia: 40 ft.	
3		Specific Gravity at P.T.: 0.67	Suction Pressure psia: 10 ft.	
4		Viscosity at P.T. cs-cp	Differential Pressure psi	
5		Vapor Pressure at P.T.	Differential Head: 30 ft.	
6		Corrosion or Erosion Factors:	NPSH Available ft.	
7			NPSH Required (Water) ft.	
8	CONSTRUCTION DETAILS	Arrangement: (Horiz.)-Vert.-In Line	Suction: (Single)- Double	
9		Direction of Rotation Facing Pump Coupling: CW - CCW	Speed: 1750 rpm	
10		Case: Design Pressure psig	Number of Stages 1 ; Shut-Off Pressure ft.	
11		Max. Allow. Working Press. psig	Volumetric Efficiency at Rating %	
12		Split: Horiz-Vert-Barrel	Impeller Type	
13		Impeller Diameter: Supplied 5¾ inches;	Maximum 6⅞ inches; Minimum 3½ inches	
14		Vent and Drain Tapped: Yes - No	Bearings: Thrust Type	
15		Nozzles / Size / Rating / Facing / Location	Radial Type	
16		Suction 1½"	Lubrication on Bearings; Oil - Grease	
17		Discharge 1"	Oiler: Yes - No; Type	
18		Vents	Coupling: Yes - No; Mfr.	
19		Drains	Coupling Guard: Yes - No	
20		Cooling H_2O	Baseplate: Yes - No; Type	
21		Water Cooling: Casing-Stuff. Box-Bearings-Pedestal-Gland-(None)	Total Water Required: gpm	
22		Smothering Gland: Yes (No)	Lubrication on Stuffing Box: Oil-Grease-None	
23		Packing: Yes (No) Type	Sealing Oil Connection: Yes - No	
24		Mechanical Seal: (Yes) - No; Furnished by: Vendor	; Mfr. Type	
25		Single - Double-Inside-Outside-Balanced-Unbalanced		
26		Rotary Unit ; Seal Ring	; Face Material ; Shaft Packing	
27		Insert ; Reversible: Yes - No	; Face Material	
28		Insert Mounting: Clamped In - "O" Ring - Press Fit		
29		Gland ; Plain: Yes - No	Throttle Bushing Carbon: Yes - No ; Other	
30		Gland/Stuffing Box Machined & Tapped for: Dead - End Lub. - Circulating Lub. - Quenching - Vent & Drain		
31		Flushing Seal Faces with Discharge Bypass - Flushing Seal Faces with External Fluid		
32		Auxiliary Stuffing Box Req'd: Yes (No)		
33		Weight of Pump lb;	Weight of Base lb	
34		Weight of Driver lb,	Shipping Weight lb	
35	MATERIALS	Casing & Covers: Ductile Iron	Shaft: Steel	
36		Casing Wear Rings: " "	Shaft Sleeves:	
37		Impeller: " "	Lantern Rings:	
38		Impeller Wear Rings: " "	Glands:	
39		Stuffing Box Bushings: " "	Gaskets:	
40	DRIVER	Furnished by: Vendor ; Type (Elec. Motor) - Steam Turbine - Other	(Direct) Gear - Belt	
41		Electric Motor: Make Mounted by Vendor	Steam Turbine: Make Mounted by	
42		Enclosure TENV SF Temp Rise °C	Model:	
43		Insulation Frame	Horsepower hp ; Speed rpm	
44		Estimated BHP Req'd. 0.3 hp	Inlet Steam Press., psig: Normal ; Max	
45		Nominal Motor Size (Non-overloading) 1 hp	Inlet Steam Temp., °F: Normal ; Max.	
46		Speed 1750 rpm	Water Rate: lb/hr	
47		Volts 440 ; Phase 3 ; Cycle 60	Vacuum (If any) mm - in. Hg - psia	
48		Speed Reducer: Integral - Separate	Back Pressure psig	
49		Mfr. Ratio	Nozzles / Size / Rating / Facing / Location	
50		Model Class	Inlet	
51		See Driver Specification No.	Exhaust	
52	TESTS	Performance Curve: (Yes) - No; Curve No.	MISC. Serial Number	
53		Certified: Yes (No)	Outline Drawing	
54		Hydrostatic Test: (Yes) - No; Pressure psig	Cross Section Drawing	
55		Shop Inspection: Yes (No)	Bulletin No. Page No.	

SPEC. BY EFH	THE DOW CHEMICAL COMPANY	1400	EQUIP. NO. P-5
CHECKED:	SERVICE	CENTRIFUGAL PUMP SPECIFICATIONS	
APP'D:	SOLVENT MAKEUP PUMP		
DATE: 2-7-74	REVISION DATE A B C	SPEC. NO.	
VENDOR TO COMPLETE ALL INFORMATION MARKED _____	SHEET OF		

18370D 4/73

PLANT	Coal-Pyritic Sulfur Removal		FILE/JOB NO. 730623
LOCATION		BLDG. NO.	CHARGE NO.
MANUFACTURER		NO. UNITS 1 Per Train	B/M NO.
			P. O. NO.
FIELD ERECTED	(YES) NO	NO. UNITS	NOMINAL VOLUME 100,000 Gal

DESIGN DATA

1	Oper. Press.-Positive	Vacuum	10 in. H_2O	2 oz
2	Operating Temperature °F		160	
3	Liquid Specific Gravity		0.67	
4	Contents Lethal		Yes (No)	
5	Des. Press.-Positive	Vacuum	15 in. H_2O	3 oz
6	Design Temperature °F		200	
7				
8				
9	Hydrostatic Test in. H_2O		Full of Water	
10	Shell / Heads Corr. Allow. in.			
11	Shell / Heads Joint Eff. %			
12	Code: API		Stamp Yes (No)	
13	Radiograph: No		Stress Relieve: NO	
14				
15	Type Supports: Ring Foundation			
16	Insulation: 1"			
17	Fireproofing: Yes			
18	Sandblast: No		Paint: NO	
19	Manhole 1 Hinged (Davited) Other:			
20	Platform Clips: Yes	Ladder Clips: Yes	Insul. Rings: Yes	
21	Pipe Supports:			
22				
23	Wind Load:		Seismic:	
24	Wt. Empty lb		Wt Full	

MATERIALS

	Item	Thickness	Mat'l Class	Mat'l - Minimum Quality
25				
26	Shell	in.		Steel
27	Cone Roof	in.		"
28	Bottom	in.		"
29	Lining	in.		Ceilcote 64
30		in.		
31		in.		
32	Nozzle Necks			" Lined
33	Flanges			" Faced
34	Coupling			None
35	M.H. Cover			Ceilcote Faced
36	Supports			
37	Bolts/Studs			
38	Nuts			
39	Gaskets			

NOZZLE SCHEDULE

	Service	Mark	No.	Size	Rating	Face	Type
40							
41	Inlet (35)	A	1	3"	150#	RF	
42	" (33)	B	1	4"	"	"	
43	" (50)	C	1	6"	"	"	
44	"	D	1	2"	"	"	
45	Vent (207)	E	1	2"	"	"	
46	LS	F	1	4"	"	"	
47	LT	G	1	2"	"	"	
48	Outlet	H	1	6"	"	"	
49	Manhole	J	1	20"	25#	"	
50		K					
51		L					
52		M					
53		N					
54		P					

55 * Nozzle to be Plugged or Blinded.

VESSEL SKETCH

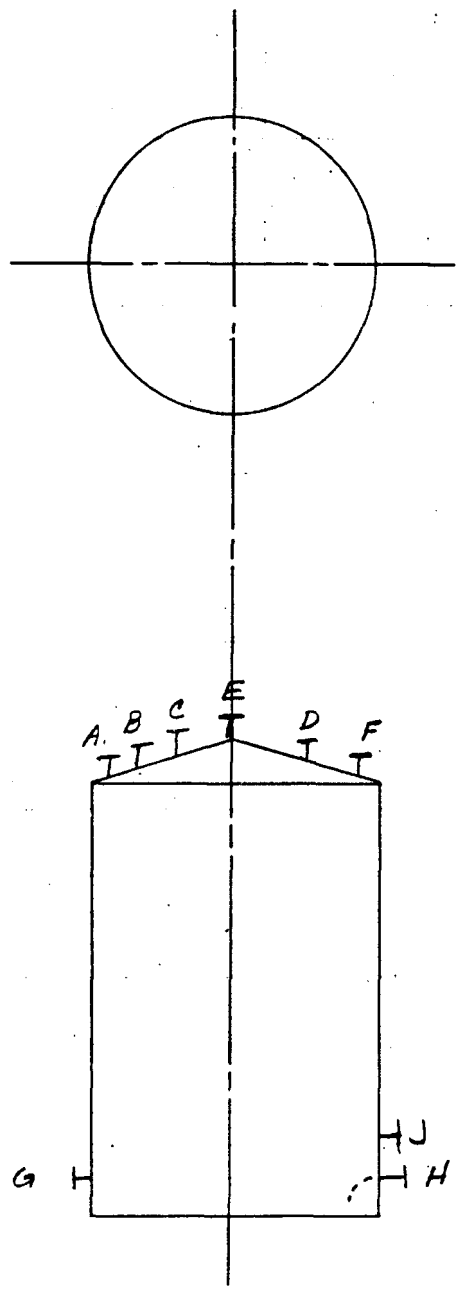

For Further Details, See Sheet No.

SPEC. BY EFH	DOW THE DOW CHEMICAL COMPANY	1400	EQUIP. NO. T-1
CHECKED:	SERVICE SOLVENT EVAP FEED TANK	VERTICAL TANK SPECIFICATIONS	
APP'D:			
DATE: 2/7/74	REVISION DATE A B C	SPEC. NO.	
VENDOR TO COMPLETE ALL INFORMATION MARKED _____	SHEET OF		

28860 2-68

PLANT	Coal-Pyritic Sulfur Removal		FILE/JOB NO. 730623
LOCATION		BLDG. NO.	CHARGE NO.
MANUFACTURER		NO. UNITS 1 per Train	B/M NO.
			P. O. NO.
FIELD ERECTED	(YES) NO	NO. UNITS	NOMINAL VOLUME 100,000 gal

DESIGN DATA

1	Oper. Press.-Positive	Vacuum	10 in. H_2O 2 oz
2	Operating Temperature °F		160
3	Liquid Specific Gravity		0.67
4	Contents Lethal		Yes (No)
5	Des. Press.-Positive	Vacuum	15 in. H_2O 3 oz
6	Design Temperature °F		200
7			
8			
9	Hydrostatic Test in. H_2O		Full of Water
10	Shell / Heads Corr. Allow. in.		
11	Shell / Heads Joint Eff. %		
12	Code: API	Stamp Yes (No)	
13	Radiograph: No	Stress Relieve: No	
14			
15	Type Supports: Ring Foundation		
16	Insulation: 1"		
17	Fireproofing: Yes		
18	Sandblast: No	Paint: No	
19	Manhole / Hinged (Davited) Other:		
20	Platform Clips: Yes	Ladder Clips: Yes	Insul. Rings: Yes
21	Pipe Supports:		
22			
23	Wind Load:	Seismic:	
24	Wt. Empty lb	Wt Full	

MATERIALS

	Item	Thickness	Mat'l Class	Mat'l - Minimum Quality
25				
26	Shell	in.		Steel
27	Cone Roof	in.		"
28	Bottom	in.		"
29	Lining	in.		Ceilcote 64
30		in.		
31		in.		
32	Nozzle Necks			Ceilcote Lined
33	Flanges			" Faced
34	Coupling			None
35	M.H. Cover			Ceilcote Faced
36	Supports			
37	Bolts/Studs			
38	Nuts			
39	Gaskets			

NOZZLE SCHEDULE

	Service	Mark	No.	Size	Rating	Face	Type
40							
41	Inlet	A	1	4"	150#	RF	
42	Vent	B	1	2"	"	"	
43	Makeup	C	1	2"	"	"	
44	Outlet	D	1	6"	"	"	
45	LT	E	1	2"	"	"	
46	LS	F	1	4"	"	"	
47	Manhole	G	1	20"	25#	"	
48		H					
49		J					
50		K					
51		L					
52		M					
53		N					
54		P					

55 * Nozzle to be Plugged or Blinded.

VESSEL SKETCH

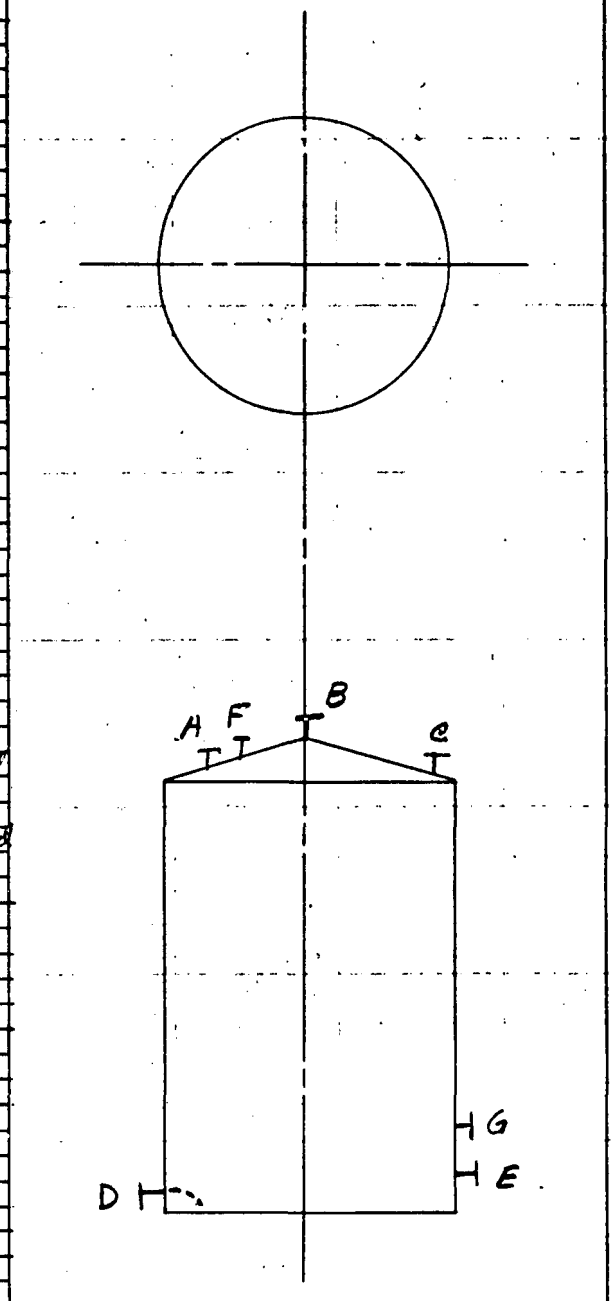

For Further Details, See Sheet No.

SPEC. BY EFH	THE DOW CHEMICAL COMPANY	1400	EQUIP. NO. T-2
CHECKED:	SERVICE RECOVERED SOLVENT SURGE	VERTICAL TANK SPECIFICATIONS	
APP'D:			
DATE: 2/7/74	REVISION DATE A B C	SPEC. NO.	
VENDOR TO COMPLETE ALL INFORMATION MARKED	SHEET OF		

25860 2-66

PLANT	Coal- Pyritic Sulfur Removal		FILE/JOB NO. 730623
LOCATION		BLDG. NO.	CHARGE NO.
MANUFACTURER		NO. UNITS 1 per Train	B/M NO.
			P. O. NO.
FIELD ERECTED	(YES) NO	NO. UNITS	NOMINAL VOLUME 24000 gal

DESIGN DATA

1	Oper. Press.-Positive	Vacuum	10 in. H2O	2 oz
2	Operating Temperature °F		266	
3	Liquid Specific Gravity		2.0	
4	Contents Lethal		Yes (No)	
5	Des. Press.-Positive	Vacuum	15 in. H2O	3 oz
6	Design Temperature °F		300	
7				
8				
9	Hydrostatic Test in. H2O		Full of Water	
10	Shell Heads Corr. Allow. in.			
11	Shell Heads Joint Eff. %			
12	Code: API		Stamp Yes (No)	
13	Radiograph: No		Stress Relieve: No	
14				
15	Type Supports: Ring Foundation			
16	Insulation: 1"			
17	Fireproofing: NO			
18	Sandblast: NO		Paint: NO	
19	Manhole / Hinged (Davited) Other:			
20	Platform Clips: YES	Ladder Clips: YES	Insul. Rings: YES	
21	Pipe Supports:			
22				
23	Wind Load:		Seismic:	
24	Wt. Empty lb		Wt Full	

MATERIALS

	Item	Thickness	Mat'l Class	Mat'l - Minimum Quality
25				
26	Shell	in.		Steel
27	Cone Roof	in.		"
28	Bottom	in.		"
29	Lining	in.		None
30		in.		
31		in.		
32	Nozzle Necks			Steel
33	Flanges			"
34	Coupling			"
35	M.H. Cover			"
36	Supports			
37	Bolts/Studs			
38	Nuts			
39	Gaskets			

NOZZLE SCHEDULE

	Service	Mark	No.	Size	Rating	Face	Type
40							
41	Inlet	A	1	2"	150	RF	
42	LS	B	1	4"	"	"	
43	TS	C	1	2"	"	"	
44	Outlet	D	1	4"	"	"	
45	Vent	E	1	2"	"	"	
46	Steam	F	1	1"	Screwed		
47	Cond	G	1	1"	"		
48	Manhole	H	1	20"	25#	RF	
49		J					
50		K					
51		L					
52		M					
53		N					
54		P					

55 * Nozzle to be Plugged or Blinded.

VESSEL SKETCH

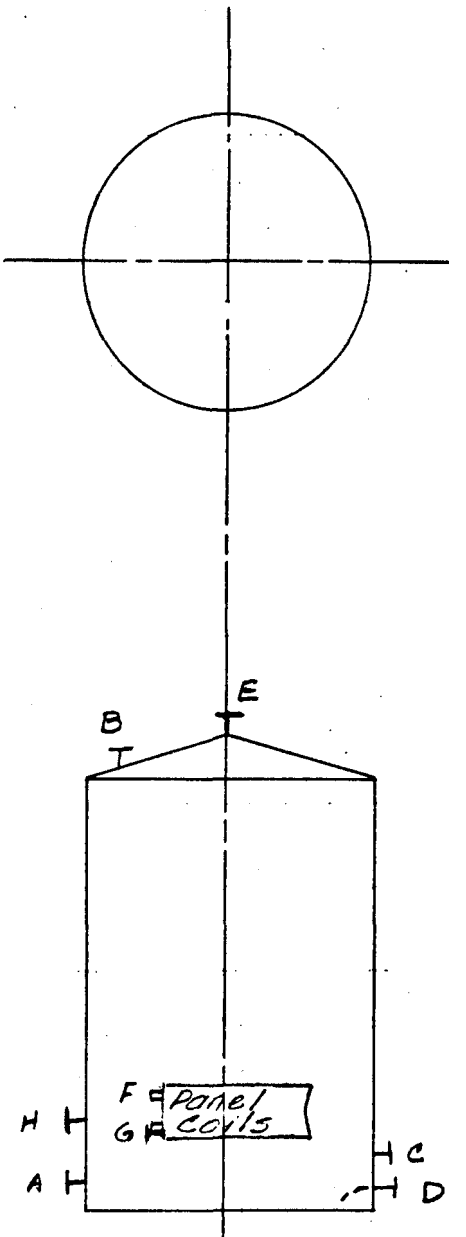

Panel coils to maintain 300°F with 100 psig Steam

For Further Details, See Sheet No.

SPEC. BY EFM	DOW THE DOW CHEMICAL COMPANY	1400	EQUIP. NO. T-3
CHECKED:	SERVICE SULFUR SURGE	VERTICAL TANK SPECIFICATIONS	
APP'D:			
DATE: 2/7/74	REVISION DATE A B C	SPEC. NO.	
VENDOR TO COMPLETE ALL INFORMATION MARKED _____	SHEET OF		

25860 2-68

PLANT	Coal: Pyritic Sulfur Removal		FILE/JOB NO. 730623
LOCATION		BLDG. NO.	CHARGE NO.
MANUFACTURER		NO. UNITS 1 per Train	B/M NO.
			P. O. NO.
FIELD ERECTED	YES (NO)	NO. UNITS	NOMINAL VOLUME 5000 Gal

DESIGN DATA

1	Oper. Press.-Positive	Vacuum	10 in. H_2O	2 oz
2	Operating Temperature °F		Ambient	
3	Liquid Specific Gravity		0.67	
4	Contents Lethal		Yes (No)	
5	Des. Press.-Positive	Vacuum	15 in. H_2O	3 oz
6	Design Temperature °F		100	
7				
8				
9	Hydrostatic Test in. H_2O		Full of Water	
10	Shell / Heads Corr. Allow. in.			
11	Shell / Heads Joint Eff. %			
12	Code: API		Stamp Yes (No)	
13	Radiograph: No		Stress Relieve: NO	
14				
15	Type Supports: Ring Foundation			
16	Insulation: NO			
17	Fireproofing: yes			
18	Sandblast: yes		Paint: Prime	
19	Manhole 1 Hinged (Davited) Other:			
20	Platform Clips: yes	Ladder Clips: yes	Insul. Rings: NO	
21	Pipe Supports:			
22				
23	Wind Load:		Seismic:	
24	Wt. Empty lb		Wt Full	

MATERIALS

	Item	Thickness	Mat'l Class	Mat'l - Minimum Quality
25				
26	Shell	in.		Steel
27	Cone Roof	in.		"
28	Bottom	in.		"
29	Lining	in.		None
30		in.		
31		in.		
32	Nozzle Necks			Steel
33	Flanges			"
34	Coupling			"
35	M.H. Cover			"
36	Supports			
37	Bolts/Studs			
38	Nuts			
39	Gaskets			

NOZZLE SCHEDULE

	Service	Mark	No.	Size	Rating	Face	Type
40							
41	Inlet	A	1	3"	150	RF	
42	LS	B	1	4"	"	"	
43	LT	C	1	2"	"	"	
44	Vent	D	1	2"	"	"	
45	Outlet	E	1	2"	"	"	
46	Manhole	F	1	20"	25#	"	
47		G					
48		H					
49		J					
50		K					
51		L					
52		M					
53		N					
54		P					

55 * Nozzle to be Plugged or Blinded.

VESSEL SKETCH

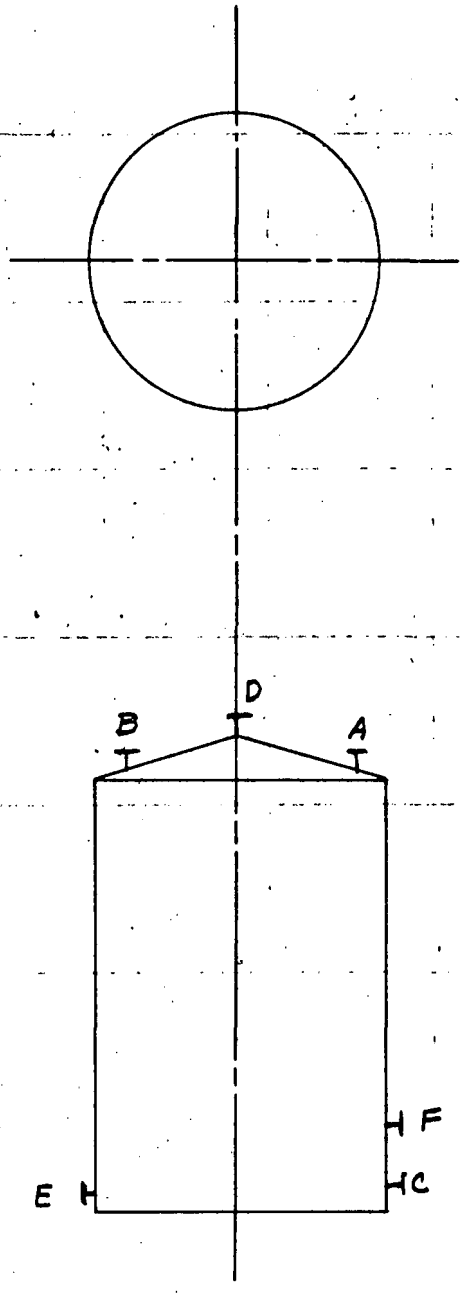

For Further Details, See Sheet No.

SPEC. BY EFH	THE DOW CHEMICAL COMPANY	1400	EQUIP. NO. T-4
CHECKED:	SERVICE MAKEUP SOLVENT STORAGE	VERTICAL TANK SPECIFICATIONS	
APP'D:			
DATE: 2/7/74	REVISION DATE A B C	SPEC. NO.	
VENDOR TO COMPLETE ALL INFORMATION MARKED _____	SHEET OF		

25860 2-66

PLANT	Coal- Pyritic Sulfur Removal		FILE/JOB NO. 730623
LOCATION		BLDG. NO.	CHARGE NO.
MANUFACTURER		NO. UNITS 1 per Train	B/M NO.
			P. O. NO.
TYPE Distillation		FIELD ERECTED YES (NO)	NO. UNITS 1

DESIGN DATA

1	Op. Press. 25 psig	Op. Temp. 250 °F	Liquid Sp. Gr. 0.67 ≈ 2.0
2	Des. Press. 50 psig	Des. Temp. 350 °F	Contents Lethal Yes (No)
3	Max. Allow. Press. (New & Cold) psig; Limited By		
4	Hydro. Test 75 psig	Code: ASME	Stamp (Yes) No
5	Corr. Allow. in.: Shell ; Heads		Radiograph
6	Joint Efficiency %: Shell ; Heads		Stress. Rel.
7	Insulation: 1"	Self Supporting (Yes) No	Sandblast: NO
8	Fireproofing: YES		Paint: NO
9	Manhole: / Hinged (Davited) Other:		
10	Platform Clips: NO	Ladder Clips: NO	
11	Pipe Supports:	Insul. Rings: Yes	
12	Wind Load:	Seismic:	
13	Shipping Wt. lb	Wt. Full lb	

TOWER SKETCH

9'-0" Diameter
30'-0" Overall Height
F&D Top & Bottom

TRAYS & INTERNALS

	Tray No.	Diam.	Spacing	Type	Material	Tray Installation
14						
15	1 Thru 3	9'	18"	Ballast	304	Removable (Yes)
16	Thru					Cartridge Support Ring
17	Thru					Tray Manway (Yes) No
18	Thru					Manway Size in.
19	Contact Device: Bubble Caps-Valves-Perforations					Weir Set. (Above Floor) in.
20	Describe:					Adjustable to in.
21						(Adj. Slots Sealed at All Settings)
22	Packing:					
23	Demister:					

MATERIAL SPECIFICATIONS

	Item	Thickness	Mat'l Class	Material - Minimum Quality
24				
25	Shell-Top	in.		304 or Clad
26	Intermed	in.		304 " "
27	Bottom	in.		304 " "
28	Heads-Top	in.		304 " "
29	Intermed	in.		
30	Bottom	in.		304 " "
31	Cone Section	in.		
32	Lining	in.		
33	Jacket	in.	Steel	Bottom 5'-0" Str Side
34	Nozzle Necks			304
35	Flanges			304 Faced
36	Coupling			None
37	M.H. Cover			304 Faced
38	Skirt		Steel	7'-0" to Bottom Head
39	Bolts/Studs			
40	Nuts			
41	Noz. Gaskets			
42	Tray Gaskets			

NOZZLE SCHEDULE

	Service	Mk	No.	Size	Rtg	Face	Type	Service	Mk	No.	Size	Rtg	Face	Type
43														
44	Feed	A	1	6"	150	RF		Pr. Relief	N					
45	Reflux	B	1	6"	"	"		Level Cont	P	4	2"	150	RF	
46	OH Vapor	C	1	12"	"	"		Samples	Q					
47	Btms. Out	D	1	3"	"	"		Jkt	R	1	2"	"	"	
48	Reboil Vap.	E	1	16"	"	"		JKT	S	1	2"	"	"	
49	Reboil Liq.	F	1	8"	"	"			T					
50	Drain	G							U					
51	Manholes	H	1	20"	"	"			V					
52	Handholes	J							W					
53	Th. Wells	K	1	2"	"	"			X					
54	Pr. Gages	L							Y					
55	Gage Gl.	M							Z					

SPEC. BY EFH	DOW THE DOW CHEMICAL COMPANY	1400	EQUIP. NO. V-1
CHECKED:	SERVICE SOLVENT/SULFUR DIST COL	TOWER SPECIFICATIONS	
APP'D:			
DATE: 2/7/74	REVISION DATE A B C	SPEC. NO.	
VENDOR TO COMPLETE ALL INFORMATION MARKED	SHEET OF		

14630 3-68

PLANT	COAL-PYRITIC SULFUR REMOVAL		FILE/JOB NO. 736623
LOCATION		BLDG. NO.	CHARGE NO.
MANUFACTURER		NO. UNITS 1 per Train	B/M NO.
			P. O. NO.

FIELD ERECTED YES (NO)	NO. UNITS	TOTAL VOLUME 1400 GAL	

VESSEL SKETCH

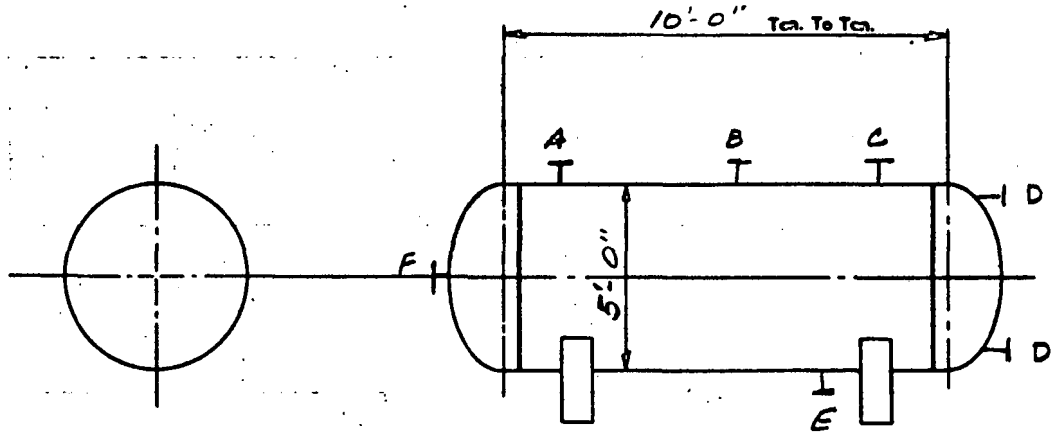

For Further Details See Sheet No.

DESIGN DATA

Operating Pressure psig	25	Type Supports: Saddles		
Operating Temperature °F	160	Insulation: "		
Liquid Specific Gravity	0.67	Fireproofing: Yes		
Contents Lethal	Yes (No)	Sandblast: No	Paint: NO	
Design Pressure psig	50	Manhole 1 Hinged (Davited)	Other:	
Design Temperature °F	250	Platform Clips: No	Ladder Clips: No	
Max. All. Press. (New & Cold) psig		Pipe Supports:	Insul. Rings: Yes	
Limited By				
Hydrostatic Test psig	75	Wt. Empty lb	Wt. Full of Water lb	
Shell / Heads Corr. Allow. in.				
Shell / Heads Joint Eff. %				
Code: ASME	Stamp Req'd (Yes) No			
Radiograph: NO	Stress Relieve: NO			
National Board No.				

MATERIALS

Item	Thickness	Mat'l Class	Mat'l-Minimum Quality
Shell	in.		304
Heads	in.		"
Lining	in.		
	in.		
	in.		
Noz. Necks			304
Flanges			304 Faced
Coupling			None
M.H. Cover			304 Faced
Supports			Steel
Bolts/Studs			
Nuts			
Gaskets			

NOZZLE SCHEDULE

Service	Mark	No.	Size	Rating	Face	Type
Inlet	A	1	8"	150	RF	
PT	B	1	2"	"	"	
Vent	C	1	2"	"	"	
LC	D	2	2"	"	"	
Outlet	E	1	8"	"	"	
Manhole	F	1	20"	25#	"	
	G					
	H					
	J					
	K					
	L					
	M					
	N					
	P					
	Q					
	R					
	S					
	T					

* Nozzle to be Plugged or Blinded

SPEC. BY EFH	THE DOW CHEMICAL COMPANY	1400	EQUIP. NO. V-2
CHECKED:	SERVICE ACCUMULATOR	HORIZONTAL DRUM SPECIFICATIONS	
APP'D:			
DATE: 2/7/74	REVISION DATE A B C	SPEC. NO.	
VENDOR TO COMPLETE ALL INFORMATION MARKED _____	SHEET OF		

17740 2-68

PLANT Coal-Pyritic Sulfur Removal			FILE JOB NO. 730623.
LOCATION	BLDG. NO.		CHARGE NO.
MANUFACTURER	NO. UNITS 1 per Train		B/M NO.
			P. O. NO.
DUTY/UNIT 300,000 BTU/HR	NO. UNITS	SHELLS/UNIT	TEMA SIZE/TYPE

TYPE

1. Horiz. (Vert.) Sloped ° to horiz. (FTS) with Exp. Joint U-Tube Kettle Coil Hairpin Box
2. Floating Hd.-Pull Thru-Clamp Ring-Packed Thermosyphon Fintube Other:

PERFORMANCE OF ONE UNIT

			Inlet - SHELL SIDE - Outlet		Inlet - TUBE SIDE - Outlet	
3	Additional Proc. Data on Sheet No.					
4	Fluid		Water		10% NaOH +	
5	Total Flow	lb/hr	30000		30,000	
6	Liquid	lb/hr	30,000	30000	30000	30000
7	Density	lb/cu ft	1.0sp gr		1.085sp gr	
8	Viscosity	CS-CP				
9	Specific Heat	Btu/lb-°F				
10	Thermal Conductivity	Btu/hr-sq ft-°F/ft				
11	Vapor	lb/hr				
12	Mol Wt Density	lb/cu ft				
13	Viscosity	CS-CP				
14	Specific Heat	Btu/lb-°F				
15	Thermal Conductivity	Btu/hr-sq ft-°F/ft				
16	Latent Heat	Btu/lb				
17	Non-Condensables	lb/hr		M.W. =		M.W. =
18	Velocity Max./Min.	ft/sec				
19	Norm. Max. Operating Temp.	°F	85	105	95	115
20	Operating Press. (Inlet)	psig				
21	Pressure Drop	psi	Allow.	Calc.	Allow	Calc.
22	Film Coeff.	BTU/Hr. Sq. Ft.				
23	Fouling Resistance,	hr-sq ft-°F/Btu:				
24	Over-all Coefficient- "Uo"	Btu/hr-sq ft. °F; Clean	Service 200		LMTD (Corrected) 10	°F
25	Installed Area/Unit	150	sq ft (Outside) Including-Excluding Area in tube sheets.			

DESIGN DATA PER SHELL

		SHELL SIDE	TUBE SIDE		
26				Shell ID (Approximate)	in.
27	Design Temperature °F	150	150	No. Tubes (Approximate) 48	
28	Design Pressure psig	150	150	Tube OD 1" in.	Tube Gage 11 BWG
29	Hydrostatic Test psig	225	225	Tube Length 12'	ft
30	Corrosion Allow./Lining in.	—	—	Tube Pitch △ □ ◇ △	in.
31	Number of Passes	1	1	Joint Rolled	
32	Insulation	—	—	Make/Type Fintubes	
33	Cross Baffles: Type ; Segment Cut %			No. Fins per tube;	per in.
34	Number ; Spacing Approx. Equal - See Sheet No.			Fin Height in.	Fin Thick. in.
35	Provide in. Horizontal Cut on Bottom for Condensate Drain			Vessel Supports Saddles - Lugs Other;	
36	Long Baffles: Type ; Number			Weir Height in.; Shell After Weir	in.
37	Impingement Baffle Yes (No)	Condensate Lift Yes - (No)	Removable Bundle Yes - (No)	Cathodic Protection Yes - (No)	
38	TEMA Class	Lethal Yes - No	Code ASME	National Board Other:	Stamp Yes - No
39	Spot Radiograph: Shell Shell Cover Channel		Stress Relieve: Shell Shell Cover Channel		Floating Head
40	Weight Complete Empty/Full of Water /			lb Weight Bundle Only	lb
41	Sandblast:	Paint:	Maintain	Shell ID Tube Count	Installed Area+ %- %

NOZZLES PER SHELL

	SHELL SIDE					TUBE SIDE				
Service	Mk	Size	Rtg	Face	Type	Mk	Size	Rtg	Face	Type
Inlet	A	2"	150	RF		S	2"	150	RF	
Outlet	B	2"	"	"		R	2"	"	"	
Drain										
Vent										

53. See Nozzle Sketch on Sheet No.

CONN.

54. Shell Side: Parallel Banks of Shells In Series
55. Tube Side: Parallel Banks of Shells in Series
56. Stacked: Wide High

MATERIAL SPECIFICATIONS

Tubes	Steel	Chan. Noz. Necks	Steel
Stat Tube Sheet	"	Chan. Noz. Flanges	"
Fltg. Tube Sheet		Channel Flanges	"
Cross Baf./Tube Sup.		Fltg. Head	
Long Baffles		Fltg. Hd. Flange	
Impinge. Baffle		Clamp Ring	
Weir/Lift		Bolts/Studs	
Tie Rods & Spacers		Nuts	
Shell	Steel	Vessel Supports	
Shell Cover	"	GASKETS & PACKING	
Channel	"	Shell Cover	
Ch. Cover/Bonnet	"	Shell-Chan. Side	
Shell Noz. Necks	"	Channel	
Shell Noz. Flanges	"	Channel Cover	
Shell Flanges	"	Fltg. Hd.	

SPEC. BY EFH	DOW THE DOW CHEMICAL COMPANY	1500	EQUIP. NO. E-1
CHECKED:	SERVICE SCRUBBER COOLER	HEAT EXCHANGER SPECIFICATIONS	
APP'D:			
DATE: 2/9/74	REVISION DATE A B C	SPEC. NO.	
VENDOR TO COMPLETE ALL INFORMATION MARKED _____	SHEET OF		

17150D 1/73

PLANT	Coal- Pyritic Sulfur Removal		FILE JOB NO. 730623
LOCATION		BLDG. NO.	CHARGE NO.
MANUFACTURER		NO. UNITS 2 per Train	B/M NO.
			P.O. NO.

MODEL 1x1½-8 NO. UNITS ASA PUMP [X] YES [ ] NO ASA DESIGNATION

1	SERVICE CONDITIONS	Liquid Pumped 10% NaOH		Max. Capacity at P.T. 56	gpm
2		Pumping Temperature (P.T.) 115 °F		Discharge Pressure psia 70	ft.
3		Specific Gravity at P.T. 1.08		Suction Pressure psia 10	ft.
4		Viscosity at P.T. cs-cp		Differential Pressure psi	
5		Vapor Pressure at P.T.		Differential Head 60	ft.
6		Corrosion or Erosion Factors:		NPSH Available	ft.
7				NPSH Required (Water)	ft.
8	CONSTRUCTION DETAILS	Arrangement (Horiz.) Vert.-In Line		Suction (Single) - Double	
9		Direction of Rotation Facing Pump Coupling: CW - CCW		Speed: 1750	rpm
10		Case: Design Pressure psig		Number of Stages 1 ; Shut-Off Pressure	ft.
11		Max. Allow. Working Press. psig		Volumetric Efficiency at Rating	%
12		Split: Horiz-Vert-Barrel		Impeller Type	
13		Impeller Diameter: Supplied 7½ inches;		Maximum 8 inches; Minimum 5½	inches
14		Vent and Drain Tapped: Yes - No		Bearings: Thrust Type	
15		Nozzles / Size / Rating / Facing / Location		Radial Type	
16		Suction 1½"		Lubrication on Bearings; Oil - Grease	
17		Discharge 1"		Oiler: Yes - No; Type	
18		Vents		Coupling: Yes - No; Mfr.	
19		Drains		Coupling Guard: Yes - No	
20		Cooling H_2O		Baseplate: Yes - No; Type	
21		Water Cooling: Casing-Stuff. Box-Bearings-Pedestal-Gland (None)		Total Water Required:	gpm
22		Smothering Gland: Yes - No		Lubrication on Stuffing Box: Oil-Grease-None	
23		Packing: Yes - No; Type		Sealing Oil Connection: Yes - No	
24		Mechanical Seal: (Yes) - No; Furnished by: Vendor		; Mfr. Type	
25		Single - Double-Inside-Outside-Balanced-Unbalanced			
26		Rotary Unit ; Seal Ring		; Face Material ; Shaft Packing	
27		Insert ; Reversible: Yes - No		; Face Material	
28		Insert Mounting: Clamped In - "O" Ring - Press Fit			
29		Gland ; Plain: Yes - No		Throttle Bushing Carbon: Yes - No ; Other	
30		Gland/Stuffing Box Machined & Tapped for: Dead - End Lub. - Circulating Lub. - Quenching - Vent & Drain			
31		Flushing Seal Faces with Discharge Bypass - Flushing Seal Faces with External Fluid			
32		Auxiliary Stuffing Box Req'd: Yes - No			
33		Weight of Pump		lb; Weight of Base	lb
34		Weight of Driver		lb; Shipping Weight	lb
35	MATERIALS	Casing & Covers: Ductile Iron		Shaft: Steel	
36		Casing Wear Rings: "		Shaft Sleeves:	
37		Impeller: "		Lantern Rings:	
38		Impeller Wear Rings: "		Glands:	
39		Stuffing Box Bushings: "		Gaskets:	
40	DRIVER	Furnished by: Vendor ; Type (Elec. Motor) - Steam Turbine - Other		; Direct - Gear - Belt	
41		Electric Motor: Make Mounted by Vendor		Steam Turbine: Make Mounted by	
42		Enclosure TEFC SF Temp Rise °C		Model:	
43		Insulation Frame		Horsepower hp ; Speed	rpm
44		Estimated BHP Req'd. 3.24 hp		Inlet Steam Press., psig: Normal ; Max	
45		Nominal Motor Size (Non-overloading) 5 hp		Inlet Steam Temp., °F: Normal ; Max.	
46		Speed 1750 rpm		Water Rate:	lb/hr
47		Volts 440 ; Phase 3 ; Hz 60		Vacuum (If any)	mm - in. Hg - psia
48		Speed Reducer: Integral - Separate		Back Pressure	psig
49		Mfr. Ratio		Nozzles / Size / Rating / Facing / Location	
50		Model Class		Inlet	
51		See Driver Specification No.		Exhaust	
52	TESTS	Performance Curve: (Yes) - No; Curve No.	MISC.	Serial Number	
53		Certified: Yes (No)		Outline Drawing	
54		Hydrostatic Test: Yes - No; Pressure psig		Cross Section Drawing	
55		Shop Inspection: Yes (No)		Bulletin No. Page No.	

SPEC. BY EFH	THE DOW CHEMICAL COMPANY	1500	EQUIP. NO. P-1A-B
CHECKED:	SERVICE SCRUBBER CIRCULATING PUMP	CENTRIFUGAL PUMP SPECIFICATIONS	
APP'D:			
DATE 2/9/74	REVISION DATE A B C	SPEC. NO.	
VENDOR TO COMPLETE ALL INFORMATION MARKED _____	SHEET OF		

10370D 4/73

PLANT Coal- Pyritic Sulfur Removal			FILE JOB NO. 750623
LOCATION	BLDG. NO.		CHARGE NO.
MANUFACTURER	NO. UNITS 2 per Train		B/M NO.
			P.O. NO.

MODEL 1x1½-8 NO. UNITS ASA PUMP ☒ YES ☐ NO ASA DESIGNATION

1	SERVICE CONDITIONS	Liquid Pumped: Naphtha	Max. Capacity at P.T.	10	gpm
2		Pumping Temperature (P.T.): 115 °F	Discharge Pressure psia	70	ft.
3		Specific Gravity at P.T.: 0.67	Suction Pressure psia	10	ft.
4		Viscosity at P.T. cs-cp	Differential Pressure psi		
5		Vapor Pressure at P.T.	Differential Head	60	ft.
6		Corrosion or Erosion Factors:	NPSH Available		ft.
7			NPSH Required (Water)		ft.
8	CONSTRUCTION DETAILS	Arrangement: (Horiz.) Vert.-In Line	Suction (Single) Double		
9		Direction of Rotation Facing Pump Coupling: CW - CCW	Speed: 1750		rpm
10		Case: Design Pressure psig	Number of Stages 1 ; Shut-Off Pressure		ft.
11		Max. Allow. Working Press. psig	Volumetric Efficiency at Rating		%
12		Split: Horiz-Vert-Barrel	Impeller Type		
13		Impeller Diameter: Supplied 7¼ inches;	Maximum 8 inches; Minimum 5½		inches
14		Vent and Drain Tapped: Yes - No	Bearings: Thrust - Type		
15		Nozzles / Size / Rating / Facing / Location	Radial Type		
16		Suction 1½"	Lubrication on Bearings; Oil - Grease		
17		Discharge 1"	Oiler: Yes - No; Type		
18		Vents	Coupling: Yes - No; Mfr.		
19		Drains	Coupling Guard: Yes - No		
20		Cooling H_2O	Baseplate: Yes - No; Type		
21		Water Cooling: Casing-Stuff. Box-Bearings-Pedestal-Gland-None	Total Water Required:		gpm
22		Smothering Gland: Yes - No	Lubrication on Stuffing Box: Oil-Grease-None		
23		Packing: Yes (No) Type	Seeling Oil Connection: Yes - No		
24		Mechanical Seal: (Yes) No; Furnished by: Vendor	; Mfr. Type		
25		Single - Double-Inside-Outside-Balanced-Unbalanced			
26		Rotary Unit ; Seal Ring	; Face Material ; Shaft Packing		
27		Insert ; Reversible: Yes - No	; Face Material		
28		Insert Mounting: Clamped In - "O" Ring - Press Fit			
29		Gland ; Plain: Yes - No	Throttle Bushing Carbon: Yes - No ; Other		
30		Gland/Stuffing Box Machined & Tapped for: Dead - End Lub. - Circulating Lub. - Quenching - Vent & Drain			
31		Flushing Seal Faces with Discharge Bypass - Flushing Seal Faces with External Fluid			
32		Auxiliary Stuffing Box Req'd: Yes - No			
33		Weight of Pump lb;	Weight of Base		lb
34		Weight of Driver lb;	Shipping Weight		lb
35	MATERIALS	Casing & Covers: Ductile Iron	Shaft: Steel		
36		Casing Wear Rings: "	Shaft Sleeves:		
37		Impeller: "	Lantern Rings:		
38		Impeller Wear Rings: "	Glands:		
39		Stuffing Box Bushings:	Gaskets:		
40	DRIVER	Furnished by: Vendor ; Type (Elec. Motor) Steam Turbine - Other	; Direct - Gear - Belt		
41		Electric Motor: Make Mounted by Vendor	Steam Turbine: Make Mounted by		
42		Enclosure TEFC SF Temp Rise °C	Model:		
43		Insulation Frame	Horsepower hp ; Speed		rpm
44		Estimated BHP Req'd: <1 hp	Inlet Steam Press., psig: Normal ; Max		
45		Nominal Motor Size (Non-overloading) 1 hp	Inlet Steam Temp., °F: Normal ; Max.		
46		Speed 1750 rpm	Water Rate:		lb/hr
47		Volts 440 ; Phase 3 ; Hz 60	Vacuum (If any)		mm - in. Hg - psia
48		Speed Reducer: Integral - Separate	Back Pressure		psig
49		Mfr. Ratio	Nozzles / Size / Rating / Facing / Location		
50		Model Class	Inlet		
51		See Driver Specification No.	Exhaust		
52	TESTS	Performance Curve: (Yes) - No; Curve No.	MISC. Serial Number		
53		Certified: Yes (No)	Outline Drawing		
54		Hydrostatic Test: Yes - No; Pressure psig	Cross Section Drawing		
55		Shop Inspection: Yes (No)	Bulletin No. Page No.		

SPEC. BY EFN	DOW THE DOW CHEMICAL COMPANY	1500	EQUIP. NO. P-2A/B
CHECKED:	SERVICE Recovered Naphtha Pump	CENTRIFUGAL PUMP SPECIFICATIONS	
APP'D:			
DATE: 2/7/74	REVISION DATE A B C	SPEC. NO.	
VENDOR TO COMPLETE ALL INFORMATION MARKED _____	SHEET OF		

18370D 4/73

PLANT Coal-Pyritic Sulfur Removal			FILE/JOB NO. 730623
LOCATION	BLDG. NO.		CHARGE NO.
MANUFACTURER	NO. UNITS 1 per Train		B/M NO.
			P. O. NO.
TYPE Packed	FIELD ERECTED YES (NO)	NO. UNITS	

DESIGN DATA

1	Op. Press. 0 psig	Op. Temp. 110 °F		Liquid Sp. Gr. 1.08	
2	Des. Press. 25 psig	Des. Temp. 150 °F		Contents Lethal Yes (No)	
3	Max. Allow. Press. (New & Cold) psig; Limited By				
4	Hydro. Test 40 psig	Code:		Stamp Yes (No)	
5	Corr. Allow. in.: Shell ; Heads			Radiograph NO	
6	Joint Efficiency %: Shell ; Heads			Stress. Rel. NO	
7	Insulation: NO	Self Supporting Yes (No)		Sandblast: YES	
8	Fireproofing: NO			Paint: Prime	
9	Manhole: Hinged (Davited) Other:				
10	Platform Clips: NO		Ladder Clips: NO		
11	Pipe Supports: NO		Insul. Rings: NO		
12	Wind Load:		Seismic:		
13	Shipping Wt. lb		Wt. Full lb		

TRAYS & INTERNALS

	Tray No.	Diam.	Spacing	Type	Material	Tray Installation
14						
15	Thru					Removable Yes No
16	Thru					Cartridge Support Ring
17	Thru					Tray Manway Yes No
18	Thru					Manway Size in.
19	Contact Device: Bubble Caps-Valves-Perforations					Weir Set. (Above Floor) in.
20	Describe:					Adjustable to in.
21						(Adj. Slots Sealed at All Settings)
22	Packing: 1" Steel Rings					
23	Demister:					

MATERIAL SPECIFICATIONS

	Item	Thickness	Mat'l Class	Material - Minimum Quality
24				
25	Shell-Top	in.		Steel
26	Intermed	in.		"
27	Bottom	in.		"
28	Heads-Top	in.		"
29	Intermed	in.		
30	Bottom	in.		"
31	Cone Section	in.		
32	Lining	in.		None
33		in.		
34	Nozzle Necks			Steel
35	Flanges			"
36	Coupling			"
37	M.H. Cover			"
38	Skirt			
39	Bolts/Studs			
40	Nuts			
41	Noz. Gaskets			
42	Tray Gaskets			

NOZZLE SCHEDULE

	Service	Mk	No.	Size	Rtg	Face	Type	Service	Mk	No.	Size	Rtg	Face	Type
43														
44	Feed	A	2	4"	150	RF		Pr. Relief	N	-				
45	Reflux	B	1	2"	"	"		Level Cont	P	-				
46	OH Vapor	C	1	3"	"	"		Samples	Q	-				
47	Btms. Out	D	1	4"	"	"		Eq.	R	1	2"	150	RF	
48	Reboil Vap.	E	—						S					
49	Reboil Liq.	F	-						T					
50	Drain	G	-						U					
51	Manholes	H	1	18"	25#	RF			V					
52	Handholes	J	-						W					
53	Th. Wells	K	-						X					
54	Pr. Gages	L	-						Y					
55	Gage Gl.	M	-						Z					

TOWER SKETCH

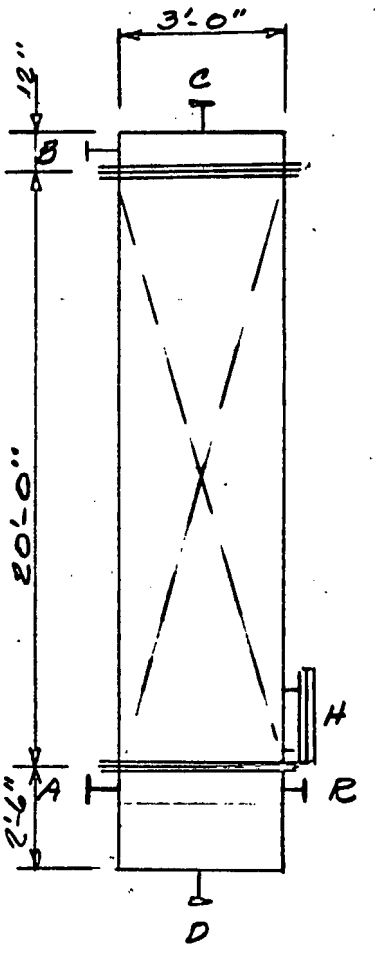

SPEC. BY EFH	THE DOW CHEMICAL COMPANY	O.V. NO. 1500	EQUIP. NO. V-1
CHECKED:	SERVICE SCRUBBER TOWER	TOWER SPECIFICATIONS	
APP'D:			
DATE: 2/9/74	REVISION DATE A B C	SPEC. NO.	
VENDOR TO COMPLETE ALL INFORMATION MARKED _____	SHEET OF		

14630 3-68

PLANT COAL- PYRITIC SULFUR REMOVAL			FILE/JOB NO. 730623
LOCATION	BLDG. NO.		CHARGE NO.
MANUFACTURER	NO. UNITS 1 per Train		B/M NO.
			P. O. NO.

FIELD ERECTED YES (NO) | NO. UNITS 1 per Train | TOTAL VOLUME 10,000 GAL

VESSEL SKETCH

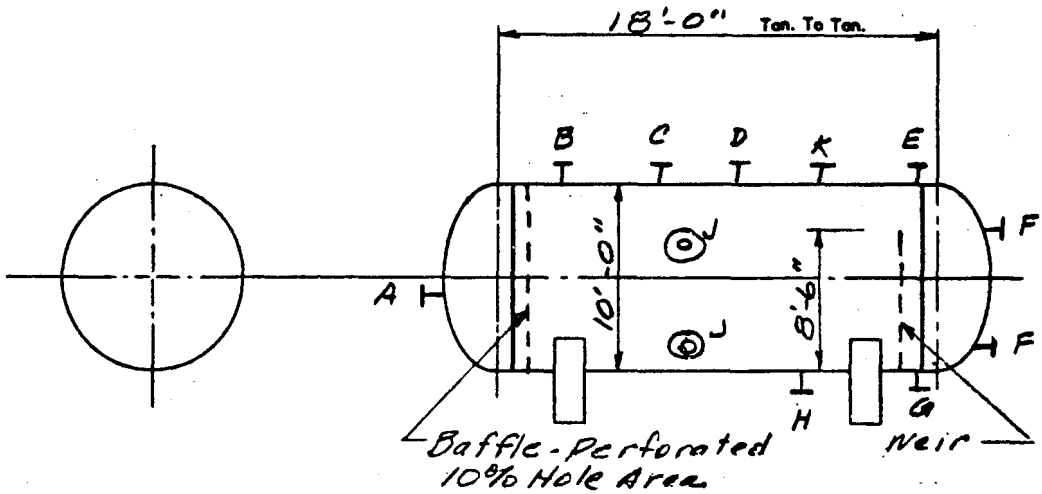

For Further Details See Sheet No.

DESIGN DATA

Operating Pressure	psig	0	Type Supports:	
Operating Temperature	°F	115	Insulation:	
Liquid Specific Gravity		1.08/0.67	Fireproofing:	
Contents Lethal		Yes (No)	Sandblast:	Paint:
Design Pressure	psig	25	Manhole Hinged Davited Other:	
Design Temperature	°F	150	Platform Clips:	Ladder Clips:
Max. All. Press. (New & Cold)	psig		Pipe Supports:	Insul. Rings:
Limited By				
Hydrostatic Test	psig	40	Wt. Empty lb	Wt. Full of Water lb

Shell	Heads Corr. Allow. in.		
Shell	Heads Joint Eff. %		
Code: ASME		Stamp Req'd Yes (No)	
Radiograph: No		Stress Relieve: NO	
National Board No.			

MATERIALS

Item	Thickness	Mat'l Class	Mat'l-Minimum Quality
Shell	in.		Steel
Heads	in.		"
Lining	in.		None
	in.		
	in.		
Noz. Necks			Steel
Flanges			"
Coupling			"
M.H. Cover			"
Supports			"
Bolts/Studs			
Nuts			
Gaskets			

NOZZLE SCHEDULE

Service	Mark	No.	Size	Rating	Face	Type
Inlet	A	1	4"	150	RF	
Eq	B	1	2"	"	"	
NaOH	C	1	2"	"	"	
H_2O	D	1	2"	"	"	
LS	E	1	6"	"	"	
LT	F	2	2"	"	"	
Naphtha	G	1	2"	"	"	
Outlet	H	1	3"	"	"	
LT	J	2	2"	"	"	
MH	K	1	20"	25#	"	
	L					
	M					
	N					
	P					
	Q					
	R					
	S					
	T					

* Nozzle to be Plugged or Blinded

SPEC. BY EFH	THE DOW CHEMICAL COMPANY	1500	EQUIP. NO. V-2
CHECKED:	SERVICE SCRUBBER SURGE-DECANTER	HORIZONTAL DRUM SPECIFICATIONS	
APP'D:			
DATE: 2/9/74	REVISION DATE A B C	SPEC. NO.	
VENDOR TO COMPLETE ALL INFORMATION MARKED _____	SHEET OF		

17740 2-68

PLANT COAL - PYRITIC SULFUR REMOVAL			FILE/JOB NO. 730623
LOCATION	BLDG. NO.		CHARGE NO.
MANUFACTURER	NO. UNITS ONE		B/M NO.
			P. O. NO.

TYPE

DESIGN CONDITIONS

Fuel - Minus 100 Mesh Coal
Steam - 450 psig 500°F 1,000,000 #/hr net to distribution system

SPECIFICATIONS

Complete Steam generation plant
3 Boilers each having 45% of total capacity
Water Treatment 500,000 #/hr makeup
Electrostatic Precipiters to meet EPA Standards
Coal Storage & transport from purchaser's process plant.
85% Minimum overall thermal efficiency

Provide Steam distribution piping and Condensate return piping to and from process units, administration & shop buildings per Process flow Sheet #12 and plot plans

SPEC. BY EFH	THE DOW CHEMICAL COMPANY		EQUIP. NO. 2100
CHECKED:	SERVICE STEAM GENERATION PLANT		MISCELLANEOUS EQUIPMENT SPECIFICATIONS
APP'D:			
DATE: 2/7/74	REVISION DATE A B C		SPEC. NO.
VENDOR TO COMPLETE ALL INFORMATION MARKED		SHEET OF	

26260 3-68

PLANT COAL- PYRITIC SULFUR REMOVAL			FILE/JOB NO. 730623
LOCATION	BLDG. NO.		CHARGE NO.
MANUFACTURER	NO. UNITS ONE		B/M NO.
			P. O. NO.

TYPE

DESIGN CONDITIONS

SPECIFICATIONS

Water Supply
8950 U.S. Gallons per minute at 40 psig

Purchaser to provide concrete pit for Supplyer's meter(s)

SPEC. BY EFH	THE DOW CHEMICAL COMPANY		EQUIP. NO. 2200
CHECKED:	SERVICE WATER SUPPLY		MISCELLANEOUS EQUIPMENT SPECIFICATIONS
APP'D:			
DATE: 2/9/74	REVISION DATE A	B	C
VENDOR TO COMPLETE ALL INFORMATION MARKED	SHEET OF		SPEC. NO.

25260 3-68

PLANT CCRL- PYRITIC SULFUR REMOVAL			FILE/JOB NO. 730623
LOCATION	BLDG. NO.		CHARGE NO.
MANUFACTURER	NO. UNITS ONE		B/M NO.
			P. O. NO.

TYPE

DESIGN CONDITIONS

SPECIFICATIONS

PROCESS WATER SYSTEM
Furnish underground distribution to
process units and utilities per
Process Flow Sheet #12 and plot plans
Flows are normal useage design for
20% excess

SPEC. BY EFH	THE DOW CHEMICAL COMPANY		EQUIP. NO. 2201
CHECKED:	SERVICE PROCESS WATER SYSTEM		MISCELLANEOUS EQUIPMENT SPECIFICATIONS
APP'D:			
DATE: 2/9/74	REVISION DATE A	B C	SPEC. NO.
VENDOR TO COMPLETE ALL INFORMATION MARKED		SHEET OF	

28260 3-66

PLANT COAL-PYRITIC SULFUR REMOVAL			FILE/JOB NO. 730623
LOCATION	BLDG. NO.		CHARGE NO.
MANUFACTURER	NO. UNITS ONE		B/M NO.
			P. O. NO.

TYPE

DESIGN CONDITIONS

SPECIFICATIONS

Potable water supply system
Furnish totalizing meter
" Backflow Prevention (code approved)
" Underground distribution to
Process units, utilities, Adm & Shop
Buildings per process flow
Sheet #12 and plot plans.
Flows are average, design for
normal demands.

SPEC. BY EFH	THE DOW CHEMICAL COMPANY		EQUIP. NO. 2202
CHECKED:	SERVICE POTABLE WATER SYSTEM		MISCELLANEOUS EQUIPMENT SPECIFICATIONS
APP'D:			
DATE: 2/7/74	REVISION DATE A B C		SPEC. NO.
VENDOR TO COMPLETE ALL INFORMATION MARKED	SHEET OF		

28260 3-68

PLANT COAL PYRITIC SULFUR REMOVAL			FILE/JOB NO. 730623
LOCATION	BLDG. NO.		CHARGE NO.
MANUFACTURER	NO. UNITS ONE		B/M NO.
			P. O. NO.

TYPE

DESIGN CONDITIONS

SPECIFICATIONS

FIRE PROTECTION SYSTEM
1-5 million gallon Pond
Pumping capacity 22000 gpm 100 psig
Electric Driven
Pumping Capacity 10,000 gpm 100 psig
Diesel driven
Jockey pump to maintain 125 psig
Automatic Start on all pumps
Underground distribution System
to process units and utilities
F.I.A. Approved per process
Flow Sheet #12 and plot plans

SPEC. BY EFH	THE DOW CHEMICAL COMPANY		EQUIP. NO. 2203
CHECKED:	SERVICE FIRE PROTECTION SYSTEM		MISCELLANEOUS EQUIPMENT SPECIFICATIONS
APP'D:			
DATE: 2/7/74	REVISION DATE A	B	C
VENDOR TO COMPLETE ALL INFORMATION MARKED		SHEET OF	SPEC. NO.

28260 3-68

PLANT COAL-PYRITIC SULFUR REMOVAL			FILE/JOB NO. 730623
LOCATION	BLDG. NO.		CHARGE NO.
MANUFACTURER	NO. UNITS ONE		B/M NO.
			P. O. NO.

TYPE

DESIGN CONDITIONS

SPECIFICATIONS

COOLING TOWER WATER SYSTEM 100,000 gpm 60 psig
COOLING TOWER(S)
CIRCULATING PUMPS Minimum spare capacity 25%
WATER TREATING with automatic control
Supply 85°F Return 105°
Makeup from water supply with controls.
Continuous controlled blowdown based on solids
Pumps & Fans for 2300 V 60 Cy 3 Ph

SPEC. BY EFH	THE DOW CHEMICAL COMPANY		EQUIP. NO. 2204
CHECKED:	SERVICE COOLING WATER SYSTEM		MISCELLANEOUS EQUIPMENT SPECIFICATIONS
APP'D:			
DATE: 2/9/74	REVISION DATE A	B	C
VENDOR TO COMPLETE ALL INFORMATION MARKED		SHEET OF	SPEC. NO.

25260 3-68

PLANT COAL PYRITIC SULFUR REMOVAL			FILE/JOB NO. 730623
LOCATION	BLDG. NO.		CHARGE NO.
MANUFACTURER	NO. UNITS ONE		B/M NO.
			P. O. NO.

TYPE

DESIGN CONDITIONS

SPECIFICATIONS

COMPLETE OXYGEN/NITROGEN PLANT
OXYGEN 26 Ton's per hour 160 psig 99.5%
NITROGEN 8000 SCFH 40 psig 99.9%

Electrical 2300V 60CY 3PH

SPEC. BY EFH	THE DOW CHEMICAL COMPANY		EQUIP. NO. 2300
CHECKED:	SERVICE OXYGEN-NITROGEN PLANT		MISCELLANEOUS EQUIPMENT SPECIFICATIONS
APP'D:			
DATE: 2/9/74	REVISION DATE A	B	C
VENDOR TO COMPLETE ALL INFORMATION MARKED	SHEET OF		SPEC. NO.

28260 3-66

PLANT COAL-PYRITIC SULFUR REMOVAL		FILE/JOB NO. 750623
LOCATION	BLDG. NO.	CHARGE NO.
MANUFACTURER	NO. UNITS	B/M NO.
		P. O. NO.

TYPE

DESIGN CONDITIONS

SPECIFICATIONS

AIR COMPRESSION & DEHYDRATION PLANT

2350 SCFM 100psig Minus 40° Dewpoint
ONE SPARE COMPRESSOR MIN 25% of capacity
Intake Filters, After coolers, Receiver(s)
Fully automatic Electric Reactivation

AIR DISTRIBUTION to steam plant, administration bldg, cooling tower, and process units per process flowsheet #12 and plot plans

SPEC. BY EFH	THE DOW CHEMICAL COMPANY	EQUIP. NO. 2400
CHECKED:	SERVICE INSTRUMENT AIR SYSTEM	MISCELLANEOUS EQUIPMENT SPECIFICATIONS
APP'D:		
DATE: 2/8/74	REVISION DATE A B C	SPEC. NO.
VENDOR TO COMPLETE ALL INFORMATION MARKED	SHEET OF	

25260 3-68

10.3 INSTRUMENTATION

10.3.1 List of Instruments

The instrument numbers refer to the instrumentation on the process flowsheets in Section 4.5.

Sector 100 - Mixing

FR 100	Flow Recorder
FT 100	Flow to Current Converter
FE 100	Magnetic Flow Meter
WRC 101	Weight Recording Controller
WT 101	Weight Transmitter
LRC 102	Level Recorder & Controller
LT 102	Level Transmitter
I/I 102	Current-Current Repeater
LSH 102	High Level Alarm Relay
LAH 102	Alarm Annunciator Point
TRC 103	Temperature Recorder & Controller
TT 103	Resistance-Current Converter
TE&TW 103	Resistance Element & Well
TV 103	Control Valve
DR 104	Density Recorder
DX,DE, DIT-104	Density Transmitter
FQ 105	Gas Meter
FI 106	Flow Indicator
PI 107	Pressure Gage
TE,TW	Thermocouple & Well

Sector 200 - Reaction

FRC 200A-K	Flow Recorder & Controller

FT 200A-K	Flow-Current Converter
FE 200A-K	Magnetic Flow Meter
FV 200A-K	Control Valve
FRQ 201	Flow Recorder & Integrator
FT 201	Flow Transmitter
FE,FX-201	Orifice Flanges & Plate
FRC 202A-K	Flow Recorder & Controller
FT 202A-K	Flow Transmitter
FE,FX 202A-K	Orifice Flanges & Plate
FV 202A-K	Control Valve
FRC 203A-K	Flow Recorder & Controller
FT 203A-K	Flow Transmitter
FE,FX 203A-K	Orifice Flanges & Plate
FV 203A-K	Control Valve
FR 204A-K	Flow Recorder
FT 204A-K	Flow Transmitter
FE,FX 204A-K	Orifice Flanges & Plate
PRC 205A-K	Pressure Recorder & Controller
PT 205A-K	Pressure Transmitter
PV-205A-K	Control Valve
LRC 206A-K	Level Recorder & Controller
LT 206A-K	Level Transmitter
PT 206A-K	Pressure Transmitter
LSH 206A-K	High Level Alarm Relay
LAH 206A-K	Alarm Annunciator Point
FV 206A-K	Control Valve
TRC 207	Temperature Recorder & Controller
TT 207	Resistance-Current Converter
TE,TW 207	Resistance Element & Well
TV 207	Control Valve
PI 208	Pressure Gage
PI 209	Pressure Gage
TE,TW	Thermocouples & Wells

Sector 400 - Filtration #1

FRC 401A-D	Flow Recorder & Controller
FT 401A-D	Flow to Current Converter
FE 401A-D	Magnetic Flow Meter
FV 401A-D	Control Valve
FR 402	Flow Recorder
FT 402	Flow to Current Converter
FE 402	Magnetic Flow Meter
PRC 403	Pressure Recorder & Controller
PT 403	Pressure Transmitter
LSH/L 404A-D	High/Low Level Switch
LAH/L 404A-D	Alarm Annunciator Point

Sector 500 - Extraction

FR 500	Flow Recorder
FT 500	Flow Transmitter
FE,FX 500	Orifice Flanges & Plate
LRC 501	Level Recorder & Controller
LT 501	Level Transmitter
LSH/L 501	High & Low Level Alarm Switches
LAH/L 501	Alarm Annunciator Points
TE,TW	Thermocouple, Well & Recorder Point
FRC 502	Flow Recorder & Controller
FT 502	Flow Transmitter
FE,FX 502	Orifice Flanges & Plate
FV 502	Control Valve
FRC 503	Flow Recorder & Controller
FT 503	Flow Transmitter
FE,FX 503	Orifice Flanges & Plate
FV 503	Control Valve

Sector 600 - Filtration & Decantation

FRC 600A-D	Flow Recorder & Controller
FT 600A-D	Flow to Current Converter
FE 600A-D	Magnetic Flow Meter
FV 600A-D	Control Valve
AIS 601A-D	Oxygen Indicator
AE 601A-D	Oxygen Sensor
AAH 601A-D	Alarm Annunciator Point
FR 602	Flow Recorder
FT 602	Flow Transmitter
FE,FX 602	Orifice Flanges & Plate
FI 603A-D	Flow Indicator
LRC 604	Level Recorder & Controller
LT 604	Level Transmitter
LV 604	Control Valve
FR 605	Flow Recorder
FT 605	Flow Transmitter
FE,FX 605	Orifice Flanges & Plate
LSH 606	High Level Switch
LAH 606	Alarm Annunciator Point
LSH/L 607A-D	High/Low Level Switch
LAH/L 607A-D	Alarm Annunciator Point
PI 608	Pressure Gage
PI 609	Pressure Gage
TE,TW	Thermocouple, Well, Recorder Point

Sector 700 - Water Wash

FR 700	Flow Recorder
FT 700	Flow Transmitter
FE,FX 700	Orifice Flanges & Plate
LRC 701	Level Recorder & Controller

LT 701	Level Transmitter
LSH/L 701	High/Low Level Switches
LAH/L 701	Alarm Annunciator Points
TE,TW	Thermocouple, Well, Recorder Point

Sector 800 - Filtration & Decantation

FRC 800A-D	Flow Recorder & Controller
FT 800A-D	Flow Transmitter
FE 800A-D	Magnetic Flow Meter
FV 800A-D	Control Valve
AIS 801A-D	Oxygen Indicator
AE 801A-D	Oxygen Sensor
AAH 801A-D	Alarm Annunciator Point
FR 802	Flow Recorder
FT 802	Flow Transmitter
FE,FX 802	Orifice Flanges & Plate
FI 803A-D	Flow Indicator
LRC 804	Level Recorder & Controller
LT 804	Level Transmitter
LV 804	Control Valve
FR 805	Flow Recorder
FT 805	Flow Transmitter
FE,FX 805	Orifice Flanges & Plate
LSH 806	High Level Switch
LAH 806	Alarm Annunciator Point
LSH/L 807A-D	High/Low Level Switch
LAH/L 807A-D	Alarm Annunciator Point
FR 808	Flow Recorder
FT 808	Flow Transmitter
FE,FX 808	Orifice Flanges & Plate
FFRC 809	Flow Recorder & Ratio Controller
FT 809A	Flow Transmitter

FT 809B	Flow Transmitter
FE,FX 809A	Orifice Flanges & Plate
FE,FX 809B	Orifice Flanges & Plate
FV 809	Control Valve
FR 810	Flow Recorder
FT 810	Flow Transmitter
FE,FX 810	Orifice Flanges & Plate
PI 811	Pressure Gage
PI 812	Pressure Gage
FRC 813A-D	Flow Recorder & Controller
FT 813A-D	Flow Transmitter
FE,FX 813A-D	Orifice Flanges & Plate
FV 813A-D	Control Valve
TE,TW	Thermocouple, Well, & Recorder Point

Sector 900 - Drying, Decantation

FRC 900A&B	Flow Recorder & Controller
FT 900A&B	Flow Transmitter
FE,FX 900A&B	Orifice Flanges & Plate
FSH/L 900A&B	High/Low Flow Switches
FAH/L 900A&B	Alarm Annunciator Point
FV 900 A&B	Control Valve
PRC 901A&B	Pressure Recorder & Controller
PT 901A&B	Pressure Transmitter
PSL 901A&B	Low Pressure Switch
PAL 901A&B	Alarm Annunciator Point
PV 901A&B	Control Valve
AIS 902A&B	Oxygen Indicator
AE 902A&B	Oxygen Sensor
AAH 902A&B	Alarm Annunciator Point
TRC 903A&B	Temperature Recorder & Controller

TE,TW 903A&B	Temperature Element & Well
TV 903A&B	Control Valve
FR 904	Flow Recorder
FT 904	Flow Transmitter
FE,FX 904	Orifice Flanges & Plate
FR 905	Flow Recorder
FT 905	Flow Transmitter
FE,FX 905	Orifice Flanges & Plate
LSH 906	High Level Switch
LAH 906	Alarm Annunciator Point
PI 907	Pressure Gage
TE,TW	Thermocouples, Wells, Recorder Points

Sector 1100 - Iron Sulfate Removal

FRC 1100A&B	Flow Recorder & Controller
FT 1100A&B	Flow to Current Converter
FE 1100A&B	Magnetic Flow Meter
FV 1100A&B	Control Valve
LSH/L 1101A&B	High/Low Level Switch
LAH/L 1101A&B	Alarm Annunciator Point
LRC 1102	Level Recorder & Controller
LT 1102	Level Transmitter
LV 1102	Control Valve
TRC 1103	Temperature Recorder & Controller
TT 1103	Resistance to Current Converter
TE,TW 1103	Resistance Element, Well
TV 1103	Control Valve
FRC 1104	Flow Recorder & Controller
FT 1104	Flow Transmitter
FE,FX 1104	Orifice Flanges & Plate
FV 1104	Control Valve

PRC 1105	Pressure Recorder & Controller
PT 1105	Pressure Transmitter
PV 1105	Control Valve
LRC 1106	Level Recorder & Controller
LT 1106	Level Transmitter
PT 1106	Pressure Transmitter
LSH 1106	High Level Alarm
LAH 1106	Alarm Annunciator Point
TRC 1107	Temperature Recorder & Controller
TT 1107	Temperature Transmitter
TE,TW 1107	Resistance Element, Well
TV 1107	Control Valve
FRC 1108	Flow Recorder & Controller
FT 1108	Flow Transmitter
FE 1108	Magnetic Flow Meter
FV 1108	Control Valve
LC 1109	Level Controller
LV 1109	Control Valve
LSH/L 1110	High/Low Level Switches
LAH/L 1110	Alarm Annunciator Points
FR 1111	Flow Recorder
FT 1111	Flow Transmitter
FE,FX 1111	Orifice Flanges & Plate
FRC 1112	Flow Recorder & Controller
FT 1112	Flow Transmitter
FE,FX 1112	Orifice Flanges & Plate
FV 1112	Control Valve
LSH/L 1113	High/Low Level Switch
LAH/L 1113	Alarm Annunciator Points
LRC 1114	Level Recorder & Controller
LT 1114	Level Transmitter
LV 1114	Control Valve

FRC 1115	Flow Recorder & Controller
FT 1115	Flow to Current Converter
FE 1115	Magnetic Flow Meter
FV 1115	Control Valve
AR 1116	Hydrogen Ion Recorder
AIT 1116	Hydrogen Ion Indicating Transmitter
AE 1116	Hydrogen Ion Sensor
AAH/L 1116	Alarm Annunciator Points
LR 1117	Level Recorder
LT 1117	Level Transmitter
FRC 1118	Flow Recorder & Controller
FT 1118	Flow Transmitter
FE,FX 1118	Orifice Flanges & Plate
FV 1118	Control Valve
LSH/L 1119	High/Low Level Switch
LAH/L 1119	Alarm Annunciator Points
PI 1120	Pressure Gage
PI 1121	Pressure Gage
PI 1122	Pressure Gage
PI 1123	Pressure Gage
TE,TW	Thermocouples, Well, Recorder Points

Sector 1400 - Distillation

LR 1400	Level Recorder
LT 1400	Level Transmitter
LRC 1401	Level Recorder & Controller
LT 1401	Level Transmitter
TCV 1402	Self-Operated Temperature Control Valve
TE,TW 1402	Temperature Bulb, Well, & Capillary
FRC 1403	Flow Recorder & Controller

FT 1403	Flow Transmitter
FE,FX 1403	Orifice Flanges & Plate
FV 1403	Control Valve
PRC 1404	Pressure Recorder & Controller
PT 1404	Pressure Transmitter
PV 1404	Control Valve
TRC 1405	Temperature Recorder & Controller
TT 1405	Resistance to Current Converter
TE,TW 1405	Resistance Element & Well
TV 1405	Control Valve
LRC 1406	Level Recorder & Controller
LT 1406	Level Transmitter
LV 1406	Control Valve
FR 1407	Flow Recorder
FT 1407	Flow Transmitter
FE,FX 1407	Orifice Flanges & Plate
FRC 1408	Flow Recorder & Controller
FT 1408	Flow Transmitter
FE,FX 1408	Orifice Flanges & Plate
FV 1408	Control Valve
TRC 1409	Temperature Recorder & Controller
TT 1409	Temperature Transmitter
TE,TW 1409	Resistance Element, Well
TV 1409	Control Valve
LR 1410	Level Recorder
LT 1410	Level Transmitter
LR 1411	Level Recorder
LT 1411	Level Transmitter
LRC 1412	Level Recorder & Controller
LT 1412	Level Transmitter
LV 1412	Control Valve
FRC 1413	Flow Recorder & Controller

FT 1413	Flow Transmitter
FE,FX 1413	Orifice Flanges & Plate
FV 1413	Control Valve
TRC 1414	Temperature Recorder & Controller
TT 1414	Resistance to Current Converter
TE,TW 1414	Resistance Element, Well
TV 1414	Control Valve
LSH/L 1415	High/Low Level Switch
LAH/L 1415	Alarm Annunciator Points
LSH/L 1416	High/Low Level Switch
LAH/L 1416	Alarm Annunciator Points
LSH 1417	High-Level Switch
LAH 1417	Alarm Annunciator Point
LSH/L 1418	High/Low Level Switches
LAH/L 1418	Alarm Annunciator Points
TSL 1419	Low Temperature Switch
TE,TW 1419	Temperature Bulb, Well, Capillary
TAL 1419	Alarm Annunciator Point
PI 1420	Pressure Gage
PI 1421	Pressure Gage
PI 1422	Pressure Gage
PI 1423	Pressure Gage
PI 1424	Pressure Gage

Sector 1500 - Vent Collection & Scrubbing

LRC 1500	Level Recorder & Controller
LT 1500	Level Transmitter
LV 1500	Control Valve
AR 1501	Hydrogen Ion Concentration Recorder
AIT 1501	Hydrogen Ion Indicating Transmitter

AE 1501	Hydrogen Ion Sensor
AAL 1501	Alarm Annunciator Point
LRC 1502	Level Recorder & Controller
LT 1502	Level Transmitter
LV 1502	Control Valve
AR 1503	Conductivity Recorder
AIT 1503	Conductivity Indicating Transmitter
AE 1503	Conductivity Sensor
AAL 1503	Alarm Annunciator Point
LSH/L 1504	High/Low Level Switch
LAH/L 1504	Alarm Annunciator Points
PI 1505	Pressure Gage
PI 1506	Pressure Gage
TE,TW	Thermocouple, Well, Recorder Point

Miscellaneous

TR	Temperature Recorders, 24 point (3)
TI	Temperature Indicator, 50 point (1)
TE,TW	Thermocouples & Wells (50)
	Panelboard (23-2 foot Sections)
	Annunciator; Lights, Pushbuttons

10.3.2 Instrument Descriptions and Costs

The sheets that follow provide further description and costs for the instruments listed in 10.3.1.

PRELIMINARY CAPITAL - DETAIL SHEET

THE DOW CHEMICAL COMPANY
MIDLAND, MICHIGAN

SHEET 1 OF 36

PROJECT: COAL - PYRITIC SULFUR REMOVAL - INSTRUMENTS
JOB NUMBER: 730623
PHASE: I
CASE: TASK 2
BY: R. W. CERMAK
DATE:
EF NUMBER: 657
SECTION NUMBER & NAME: 100 - MIXING
SECTOR NUMBER & NAME:

FACTORS: BASE X ESC. X CAPACITY X QUANT. X [MATERIAL + CONDITION + COMPLEXITY] = M$(19)

ITEM	NAME OF FACILITY	QUANT.	CONSTRUCTION MATERIAL	DESCRIPTION	
FR 100	FLOW RECORDER W/SHELF AND CABLES	1	—		466
FT 100	FLOW-TO-CURRENT CONVERTER W/ 100FT OF CABLE.	1	—		849
FE 100	6" MAGNETIC FLOW-METER	1	TEFLON W/ TANTALUM ELECTRODES		2085
WRC 101	WEIGHT RECORDING CONTROLLER	1	—	FURNISHED AS PART OF COAL STORAGE AND HANDLING EQUIPMENT.	—
WT 101	WEIGHT TRANSMITTER	1	STEEL	AS ABOVE	—
LRC 102	LEVEL RECORDER AND CONTROLLER W/SHELF AND CABLES	1	—		1175
LT 102	FLUSH DIAPHRAGM TYPE LEVEL TRANSMITTER.	1	TANTALUM		790
I/I 102	CURRENT-TO-CURRENT OUTPUT SIGNAL REPEATER	1	—		285
LSH 102	HIGH ALARM RELAY	1	—		85
LAH 102	ALARM ANNUNCIATOR POINT	1	—		70
TRC 103	TEMPERATURE RECORDER AND CONTROLLER W/SHELF AND CABLES	1	—		1175

FORM 39630 PRINTED IN U.S.A. R1-69

PRELIMINARY CAPITAL - DETAIL SHEET

THE DOW CHEMICAL COMPANY
MIDLAND, MICHIGAN

SHEET 2 OF 36

PROJECT: COAL - PYRITIC SULFUR REMOVAL - INSTRUMENTS
JOB NUMBER: 730623

PHASE: I
CASE: TASK 2
BY: R. W. CERMAK
DATE:
EF NUMBER: 657

SECTION NUMBER & NAME: 100 - MIXING
SECTOR NUMBER & NAME:

FACTORS: BASE X ESC. X CAPACITY X QUANT. X [MATERIAL + CONDITION + COMPLEXITY] = M$(19)

ITEM	NAME OF FACILITY	QUANT.	CONSTRUCTION MATERIAL	DESCRIPTION	
TT 103	RESISTANCE - TO - CURRENT CONVERTER	1	—		535
TE TW 103	RESISTANCE THERMOMETER ELEMENT W/ WELL AND HEAD.	1	ALLOY 20 WELL		267
TV 103	6"-150LB GLOBE TYPE CONTROL VALVE W/ I/P POSITIONER	1	STEEL W/ 316 TRIM		1677
DR 104	DENSITY RECORDER W/ SHELF AND CABLES	1	—		466
DX DE DIT 104	RADIATION TYPE DENSITY TRANSMITTER W/ SOURCE, DETECTOR & ELECTRONICS	1	—		3,500
FQ 105	2" HIGH PRESSURE POSITIVE DISPLACEMENT GAS METER.	1	ALUMINUM CASE		600
FI 106	1½" VARIABLE AREA FLOW INDICATOR	1	STEEL		300
PI 107	4½" PRESSURE GAUGE	1	STEEL ELEMENT		25
TE TW	THERMOCOUPLE ELEMENT W/THERMOWELL, HEAD AND RECORDER POINT.	1	TITANIUM		250
					14,600
	PRORATE MISC				2058
				TOTAL (PER TRAIN)	16,658

FORM 39650 PRINTED IN U.S.A. R1-69

PRELIMINARY CAPITAL - DETAIL SHEET

THE DOW CHEMICAL COMPANY
MIDLAND, MICHIGAN

PROJECT: COAL - PYRITIC SULFUR REMOVAL - INSTRUMENTS
JOB NUMBER: 730623
PHASE: I
CASE: TASK 2
BY: R.W. CERMAK
DATE:
EF NUMBER: 657
SECTION NUMBER & NAME: 200 - REACTION
SECTOR NUMBER & NAME:

FACTORS: BASE X ESC. X CAPACITY X QUANT. X [MATERIAL + CONDITION + COMPLEXITY] = M$(19)

ITEM	NAME OF FACILITY	QUANT.	CONSTRUCTION MATERIAL	DESCRIPTION	
FRC 200A - 200K	FLOW RECORDER AND CONTROLLER W/ SHELF AND CABLES.	10	—		11,750
FT 200A - 200K	FLOW-TO-CURRENT CONVERTER W/ 100 FT OF CABLE.	10	—		8,490
FE 200A - 200K	3" MAGNETIC FLOW-METER.	10	TEFLON W/ TANTALUM ELECTRODES		11,250
FV 200A - 200K	2"-125LB H.D. WAFER BUTTERFLY CONTROL VALVE W/ I/P TRANSDUCER	10	ALL TITANIUM	C_V REQ'D = 42	14,970
FRQ 201	FLOW RECORDER AND INTEGRATOR W/ SHELF AND CABLES.	1	—		1196
FT 201	DIFFERENTIAL PRESSURE TYPE FLOW TRANSMITTER W/ MANIFOLD	1	ALL 316	O_2 SERVICE CLEANING	890
FE FX 201	3" ORIFICE FLANGES AND PLATE	1	STEEL W/ 316 PLATE	O_2 SERVICE CLEANING	105
FRC 202A - 202K	FLOW RECORDER AND CONTROLLER W/ SHELF AND CABLES	10	—		11,750
FT 202A - 202K	DIFFERENTIAL PRESSURE TYPE FLOW TRANSMITTER W/ MANIFOLD.	10	ALL 316	O_2 SERVICE CLEANING	8,400
FE FX 202A - 202K	2" ORIFICE FLANGES AND PLATE	10	STEEL W/ 316 PLATE	O_2 SERVICE CLEANING	780
FV 202A - 202K	1"-150LB. GLOBE TYPE CONTROL VALVE W/ I/P TRANSDUCER	10	STEEL W/ 316 TRIM.	C_V REQ'D = 3.5 O_2 SERVICE CLEANING	5870

FORM 39650 PRINTED IN U.S.A. R1-68

PRELIMINARY CAPITAL - DETAIL SHEET

THE DOW CHEMICAL COMPANY
MIDLAND, MICHIGAN

SHEET 4 OF 36

PROJECT: COAL - PYRITIC SULFUR REMOVAL - INSTRUMENTS

JOB NUMBER: 730623

PHASE: I | CASE: TASK 2 | BY: R.W. CERMAK | DATE: | EF NUMBER: 657

SECTION NUMBER & NAME: 200 - REACTION

SECTOR NUMBER & NAME:

FACTORS: BASE X ESC. X CAPACITY X QUANT. X [MATERIAL + CONDITION + COMPLEXITY] = M$(19)

ITEM	NAME OF FACILITY	QUANT.	CONSTRUCTION MATERIAL	DESCRIPTION	
FRC 203A - 203K	FLOW RECORDER AND CONTROLLER W/ SHELF AND CABLES.	10	—		11,750
FT 203A - 203K	DIFFERENTIAL PRESSURE TYPE FLOW TRANSMITTER W/ MANIFOLD	10	ALL 316	O_2 SERVICE CLEANING	8,900
FE FX 203A - 203K	2" ORIFICE FLANGES AND PLATE	10	STEEL W/ 316 PLATE	O_2 SERVICE CLEANING	780
FV 203A - 203K	1"-150LB GLOBE TYPE CONTROL VALVE W/ I/P TRANSDUCER	10	STEEL W/ 316 TRIM	C_V REQ'D = 3.5 O_2 SERVICE CLEANING	5,870
FR 204A - 204K	FLOW RECORDER W/ SHELF AND CABLES	10	—		4,660
FT 204A - 204K	DIFFERENTIAL PRESSURE TYPE FLOW TRANSMITTER W/ MANIFOLD.	10	ALL 316		7,250
FE FX 204A - 204K	2" ORIFICE FLANGES AND PLATE	10	STEEL W/ 316 PLATE		700
PRC 205A - 205K	PRESSURE RECORDER AND CONTROLLER W/ SHELF AND CABLES	10	—		11,750
PT 205A - 205K	DIAPHRAGM TYPE PRESSURE TRANSMITTER	10	ALL 316		5,350
PV 205A - 205K	1"-150LB GLOBE TYPE CONTROL VALVE W/ I/P POSITIONER	10	STEEL W/ 316 TRIM	C_V REQD = 0.3	5,970
LRC 206A - 206K	LEVEL RECORDER AND CONTROLLER W/ SHELF AND CABLES.	10	—		11,750

FORM 39650 PRINTED IN U.S.A. R1-69

PRELIMINARY CAPITAL - DETAIL SHEET

THE DOW CHEMICAL COMPANY
MIDLAND, MICHIGAN

SHEET 5 OF 36

PROJECT: COAL - PYRITIC SULFUR REMOVAL - INSTRUMENTS
JOB NUMBER: 730623
PHASE: I
CASE: TASK 2
BY: R.W. CERMAK
DATE:
EF NUMBER: 657
SECTION NUMBER & NAME: 200 - REACTION
SECTOR NUMBER & NAME:

FACTORS: BASE X ESC. X CAPACITY X QUANT. X [MATERIAL + CONDITION + COMPLEXITY] = M$(19)

ITEM	NAME OF FACILITY	QUANT.	CONSTRUCTION MATERIAL	DESCRIPTION	
LT 206A - 206K	FLUSH DIAPHRAGM TYPE LEVEL TRANSMITTER.	10	TANTALUM		7,900
PT 206A - 206K	FLUSH DIAPHRAGM TYPE PNEUMATIC PRESSURE REPEATER	10	TANTALUM		7,070
LSH 206A - 206K	HIGH LEVEL ALARM RELAY	10	—		850
LAH 206A - 206K	ALARM ANNUNCIATOR POINT	10	—		70
FV 206A - 206K	2"-125LB H.D. WAFER BUTTERFLY CONTROL VALVE w/ I/P POSITIONER.	10	ALL TITANIUM	C_V REQ'D = 25	15,670
TRC 207	TEMPERATURE RECORDER AND CONTROLLER w/ SHELF AND CABLES.	1	—		1175
TT 207	RESISTANCE - TO - CURRENT CONVERTER.	1	—		535
TE TW 207	RESISTANCE THERMOMETER ELEMENT w/ WELL AND HEAD.	1	TYPE 316 WELL	8" LG WELL, 2"-150LB FLG.	134
TV 207	6"-125LB H.D. WAFER BUTTERFLY CONTROL VALVE w/ I/P POSITIONER	1	IRON AND STEEL w/316 TRIM	C_V REQ'D = 300	917
PI 208	4½" PRESSURE GAUGE w/ CAPILLARY TO REMOTE SEAL.	1	TANTALUM DIAPHRAGM IN TEFLON SEAL		170
PI 209	4½" PRESSURE GAUGE.	1	STEEL ELEMENT	O_2 SERVICE CLEANING	35

FORM 39650 PRINTED IN U.S.A. R1-69

PRELIMINARY CAPITAL - DETAIL SHEET

THE DOW CHEMICAL COMPANY
MIDLAND, MICHIGAN

SHEET 6 OF 36

PROJECT: COAL - PYRITIC SULFUR REMOVAL - INSTRUMENTS
JOB NUMBER: 730623

PHASE: I
CASE: TASK 2
BY: R.W. CERMAK
DATE:
EF NUMBER: 657

SECTION NUMBER & NAME: 200 - REACTION
SECTOR NUMBER & NAME:

FACTORS: BASE X ESC. X CAPACITY X QUANT. X [MATERIAL + CONDITION + COMPLEXITY] = M$(19)

ITEM	NAME OF FACILITY	QUANT.	CONSTRUCTION MATERIAL	DESCRIPTION	
TE TW	THERMOCOUPLE ELEMENT W/THERMOWELL, HEAD AND RECORDER POINT.	43	TITANIUM WELL		10,750
					195,957
	PRORATE MISC				27616
				TOTAL (PER TRAIN)	223,573

FORM 30650 PRINTED IN U.S.A. R1-69

PRELIMINARY CAPITAL - DETAIL SHEET THE DOW CHEMICAL COMPANY MIDLAND, MICHIGAN

PROJECT: COAL - PYRITIC SULFUR REMOVAL - INSTRUMENTS | JOB NUMBER: 730623

PHASE: I | CASE: TASK 2 | BY: R. W. CERMAK | DATE: | EF NUMBER: 657

SECTION NUMBER & NAME: 400 - FILTRATION No. 1 | SECTOR NUMBER & NAME:

FACTORS: BASE X ESC. X CAPACITY X QUANT. X [MATERIAL + CONDITION + COMPLEXITY] = M$(19)

ITEM	NAME OF FACILITY	QUANT.	CONSTRUCTION MATERIAL	DESCRIPTION	
FRC 401A - 401D	FLOW RECORDER AND CONTROLLER W/ SHELF AND CABLES.	4	—		4,700
FT 401A - 401D	FLOW-TO-CURRENT CONVERTER W/ 100 FT OF CABLE.	4	—		3396
FE 401A - 401D	3" MAGNETIC FLOW-METER	4	TEFLON W/ TANTALUM ELECTRODES		4500
FV 401A - 401D	3"-150LB BALL TYPE CONTROL VALVE W/ I/P TRANSDUCER.	4	ALL 316	C_V REQ'D = 75	3648
FR 402	FLOW RECORDER W/ SHELF AND CABLES	1	—		466
FT 402	FLOW-TO-CURRENT CONVERTER W/ 100 FT OF CABLE.	1	—		849
FE 402	6" MAGNETIC FLOW-METER.	1	TEFLON W/ TANTALUM ELECTRODES		2085
PRC 403	PRESSURE RECORDER & CONTROLLER W/ SHELF AND CABLES.	1	—		1175
PT 403	FLUSH DIAPHRAGM TYPE PRESSURE TRANSMITTER.	1	TANTALUM		840
LS H/L 404A - 404D	HIGH/LOW PAN LEVEL ALARM SWITCHES	8	—	FURNISHED AS PART OF 400-F-1 SERIES FILTER CONTROLS.	—
LA H/L 404A - 404D	ALARM ANNUNCIATOR POINTS	8	—		560
					22,219
	PRORATE MISC				3131
				TOTAL (PER TRAIN)	25,350

FORM 39650 PRINTED IN U.S.A. R1-69

PRELIMINARY CAPITAL - DETAIL SHEET

THE DOW CHEMICAL COMPANY
MIDLAND, MICHIGAN

SHEET 8 OF 36

PROJECT: COAL - PYRITIC SULFUR REMOVAL - INSTRUMENTS
JOB NUMBER: 730623

PHASE: I
CASE: TASK 2
BY: R.W. CERMAK
DATE:
EF NUMBER: 657

SECTION NUMBER & NAME: 500 - EXTRACTION
SECTOR NUMBER & NAME:

FACTORS: BASE X ESC. X CAPACITY X QUANT. X [MATERIAL + CONDITION + COMPLEXITY] = M$(19)

ITEM	NAME OF FACILITY	QUANT.	CONSTRUCTION MATERIAL	DESCRIPTION	
FR 500	FLOW RECORDER W/ SHELF AND CABLES	1	—		466
FT 500	DIFFERENTIAL PRESSURE TYPE FLOW TRANSMITTER W/ MANIFOLD.	1	ALL 316		725
FE FX 500	8" ORIFICE FLANGES AND. PLATE	1	STEEL W/ 316 PLATE		174
LRC 501	LEVEL RECORDER AND CONTROLLER W/ SHELF AND CABLES	1	—		1175
LT 501	FLUSH DIAPHRAGM TYPE LEVEL TRANSMITTER.	1	316 AND TANTALUM		855
LS H/L 501	HIGH AND LOW LEVEL ALARM SWITCHES	2	—		170
LA H/L 501	ALARM ANNUNCIATOR POINTS	2	—		140
TE TW	THERMOCOUPLE ELEMENT W/ THERMOWELL, HEAD AND RECORDER POINT.	1	316 WELL		130
FRC 502	FLOW RECORDER AND CONTROLLER W/ SHELF AND CABLES	1	—		1175
FT 502	DIFFERENTIAL PRESSURE TYPE FLOW TRANSMITTER W/ MANIFOLD.	1	ALL 316		725
FE FX 502	6" ORIFICE FLANGES AND PLATE	1	STEEL W/ 316 PLATE		137

FORM 39650 PRINTED IN U.S.A. R1-69

PRELIMINARY CAPITAL - DETAIL SHEET

THE DOW CHEMICAL COMPANY
MIDLAND, MICHIGAN

SHEET 9 OF 36

PROJECT: COAL - PYRITIC SULFUR REMOVAL - INSTRUMENTS
JOB NUMBER: 730623

PHASE: I
CASE: TASK 2
BY: R.W. CERMAK
DATE:
EF NUMBER: 657

SECTION NUMBER & NAME: 500 - EXTRACTION
SECTOR NUMBER & NAME:

FACTORS: BASE X ESC. X CAPACITY X QUANT. X [MATERIAL + CONDITION + COMPLEXITY] = M$(19)

ITEM	NAME OF FACILITY	QUANT.	CONSTRUCTION MATERIAL	DESCRIPTION	
FV 502	4"-150 LB GLOBE TYPE CONTROL VALVE w/ I/p TRANSDUCER	1	STEEL w/ 316 TRIM	C_V REQ'D = 130	1122
FRC 503	FLOW RECORDER AND CONTROLLER w/ SHELF AND CABLES	1	—		1175
FT 503	DIFFERENTIAL PRESSURE TYPE FLOW TRANSMITTER w/ MANIFOLD	1	ALL 316		725
FE FX 503	6" ORIFICE FLANGES AND PLATE	1	STEEL w/ 316 PLATE		137
FV 503	4"-150 LB GLOBE TYPE CONTROL VALVE w/ I/p TRANSDUCER.	1	STEEL w/ 316 TRIM	C_V REQ'D = 130	1122
					10,153
	PRORATE MISC				1,431
				TOTAL (PER TRAIN)	11,584

FORM 39650 PRINTED IN U.S.A. R1-69

PRELIMINARY CAPITAL - DETAIL SHEET

THE DOW CHEMICAL COMPANY
MIDLAND, MICHIGAN

PROJECT: COAL – PYRITIC SULFUR REMOVAL – INSTRUMENTS | JOB NUMBER: 730623

PHASE: I | CASE: TASK 2 | BY: R.W. CERMAK | DATE: | EF NUMBER: 657

SECTION NUMBER & NAME: 600- FILTER & DECANT | SECTOR NUMBER & NAME:

FACTORS: BASE X ESC. X CAPACITY X QUANT. X [MATERIAL + CONDITION + COMPLEXITY] = M$(19)

ITEM	NAME OF FACILITY	QUANT.	CONSTRUCTION MATERIAL	DESCRIPTION	
FRC 600A – 600D	FLOW RECORDER AND CONTROLLER W/ SHELF AND CABLES.	4			4,700
FT 600A – 600D	FLOW-TO-CURRENT CONVERTER W/ 100FT OF CABLE.	4			3,396
FE 600A – 600D	3" MAGNETIC FLOW-METER	4	TEFLON W/ TANTALUM ELECTRODES		4,500
FV 600A – 600D	3"-150 LB BALL TYPE CONTROL VALVE W/ I/P TRANSDUCER.	4	ALL 316	C_v REQ'D = 90	3648
AIS 601A – 601D	OXYGEN INDICATOR W/ HIGH ALARM SWITCH.	4	—		3200
AE 601A – 601D	POLAROGRAPHIC TYPE OXYGEN SENSOR	4	PVC AND TEFLON		400
AAH 601A – 601D	ALARM ANNUNCIATOR POINT	4	—		280
FR 602	FLOW RECORDER W/SHELF AND CABLES	1	—		466
FT 602	DIFFERENTIAL PRESSURE TYPE FLOW TRANSMITTER W/MANIFOLD.	1	ALL 316		725
FE FX 602	8" ORIFICE FLANGES AND PLATE	1	STEEL W/ 316 PLATE		174
FI 603A – 603D	3/4" VARIABLE AREA FLOW INDICATOR	4	STEEL		600

FORM 39650 PRINTED IN U.S.A. R1-69

PRELIMINARY CAPITAL - DETAIL SHEET

THE DOW CHEMICAL COMPANY
MIDLAND, MICHIGAN

PROJECT: COAL - PYRITIC SULFUR REMOVAL - INSTRUMENTS | JOB NUMBER: 730623

PHASE: I | CASE: TASK 2 | BY: R. W. CERMAK | DATE: | EF NUMBER: 657

SECTION NUMBER & NAME: 600-FILTER & DECANT | SECTOR NUMBER & NAME:

FACTORS: BASE X ESC. X CAPACITY X QUANT. X [MATERIAL + CONDITION + COMPLEXITY] = M$(19)

ITEM	NAME OF FACILITY	QUANT.	CONSTRUCTION MATERIAL	DESCRIPTION	
LRC 604	LEVEL RECORDER AND CONTROLLER W/ SHELF AND CABLES.	1	—	INTERFACE CONTROL	1175
LT 604	DIFFERENTIAL PRESSURE TYPE LEVEL TRANSMITTER W/ MANIFOLD.	1	ALL 316		725
LV 604	2"-150LB GLOBE TYPE CONTROL VALVE W/ I/P POSITIONER	1	STEEL W/ 316 TRIM	C_V REQ'D = 29	842
FR 605	FLOW RECORDER W/ SHELF AND CABLES	1			466
FT 605	DIFFERENTIAL PRESSURE TYPE FLOW TRANSMITTER W/ MANIFOLD.	1	ALL 316	ΔP = 20" WATER	725
FE FX 605	10" ORIFICE FLANGES AND PLATE	1	STEEL W/ 316 PLATE		255
LSH 606	HIGH LEVEL SWITCH	1	STEEL W/ 316 TRIM	5" DIA. FLOAT	250
LAH 606	ALARM ANNUNCIATOR POINT	1	—		70
LS H/L 607A - 607D	HIGH/LOW PAN LEVEL ALARM SWITCHES	8	—	FURNISHED AS PART OF 600-F-1 SERIES FILTER CONTROLS.	—
LA H/L 607A - 607D	ALARM ANNUNCIATOR POINT	8	—		560
PI 608	4½" PRESSURE GAUGE W/ CAPILLARY TO REMOTE SEAL.	1	TANTALUM DIAPHRAGM IN TEFLON SEAL		170

FORM 39650 PRINTED IN U.S.A. R1-69

PRELIMINARY CAPITAL - DETAIL SHEET

THE DOW CHEMICAL COMPANY
MIDLAND, MICHIGAN

SHEET 12 OF 36

PROJECT: COAL - PYRITIC SULFUR REMOVAL - INSTRUMENTS

JOB NUMBER: 730623

PHASE: I | CASE: TASK 2 | BY: R.W. CERMAK | DATE: | EF NUMBER: 657

SECTION NUMBER & NAME: 600 - FILTER & DECANT

SECTOR NUMBER & NAME:

FACTORS: BASE X ESC. X CAPACITY X QUANT. X [MATERIAL + CONDITION + COMPLEXITY] = M$(19)

ITEM	NAME OF FACILITY	QUANT.	CONSTRUCTION MATERIAL	DESCRIPTION	
PI 609	4½" PRESSURE GAUGE	1	STEEL ELEMENT		25
TE TW	THERMOCOUPLE ELEMENT w/ THERMOWELL, HEAD AND RECORDER POINT	1	316 WELL		130
					27,482
	PRORATE MISC				3873
				TOTAL (PER TRAIN)	31,355

FORM 39650 PRINTED IN U.S.A. R1-69

PRELIMINARY CAPITAL - DETAIL SHEET

THE DOW CHEMICAL COMPANY
MIDLAND, MICHIGAN

SHEET 13 OF 36

PROJECT: COAL - PYRITIC SULFUR REMOVAL - INSTRUMENTS

JOB NUMBER: 730623

PHASE: I

CASE: TASK 2

BY: R. W. CERMAK

DATE:

EF NUMBER: 657

SECTION NUMBER & NAME: 700 - WATER WASH

SECTOR NUMBER & NAME:

FACTORS: BASE X ESC. X CAPACITY X QUANT. X [MATERIAL + CONDITION + COMPLEXITY] = M$(19)

ITEM	NAME OF FACILITY	QUANT.	CONSTRUCTION MATERIAL	DESCRIPTION	
FR 700	FLOW RECORDER W/ SHELF AND CABLES.	1	—		466
FT 700	DIFFERENTIAL PRESSURE TYPE FLOW TRANSMITTER W/ MANIFOLD.	1	ALL 316		725
FE FX 700	8" ORIFICE FLANGES AND PLATE	1	STEEL W/ 316 PLATE		174
LRC 701	LEVEL RECORDER AND CONTROLLER W/ SHELF AND CABLES.	1	—		1175
LT 701	FLUSH DIAPHRAGM TYPE LEVEL TRANSMITTER.	1	316 AND TANTALUM		855
LS H/L 701	HIGH AND LOW LEVEL ALARM SWITCHES	2	—		170
LA H/L 701	ALARM ANNUNCIATOR POINTS	2	—		140
TE TW	THERMOCOUPLE ELEMENT W/THERMOWELL, HEAD AND RECORDER POINT.	1	316 WELL		130
					3,835
	PRORATE MISC				540
				TOTAL (PER TRAIN)	4,375

FORM 39650 PRINTED IN U.S.A. R1-69

PRELIMINARY CAPITAL - DETAIL SHEET THE DOW CHEMICAL COMPANY MIDLAND, MICHIGAN

PROJECT: COAL - PYRITIC SULFUR REMOVAL - INSTRUMENTS | JOB NUMBER: 730623

PHASE: I | CASE: TASK 2 | BY: R.W. CERMAK | DATE: | EF NUMBER: 657

SECTION NUMBER & NAME: 800-FILTER & DECANT. | SECTOR NUMBER & NAME:

FACTORS: BASE X ESC. X CAPACITY X QUANT. X [MATERIAL + CONDITION + COMPLEXITY] = M$(19)

ITEM	NAME OF FACILITY	QUANT.	CONSTRUCTION MATERIAL	DESCRIPTION	
FRC 800A - 800D	FLOW RECORDER AND CONTROLLER W/ SHELF AND CABLES	4			4700
FT 800A - 800D	FLOW-TO-CURRENT CONVERTER W/ 100FT OF CABLE	4			3396
FE 800A - 800D	3" MAGNETIC FLOW-METER.	4	TEFLON W/ TANTALUM ELECTRODES		4500
FV 800A - 800D	3"-150LB BALL TYPE CONTROL VALVE W/ I/P TRANSDUCER	4	ALL 316	C_V REQ'D = 90	3648
AIS 801A - 801D	OXYGEN INDICATOR W/ HIGH ALARM SWITCH.	4	—		3200
AE 801A - 801D	POLAROGRAPHIC TYPE OXYGEN SENSOR	4	PVC AND TEFLON		400
AAH 801A - 801D	ALARM ANNUNCIATOR POINT	4	—		280
FR 802	FLOW RECORDER W/SHELF AND CABLES	1	—		466
FT 802	DIFFERENTIAL PRESSURE TYPE FLOW TRANSMITTER W/MANIFOLD	1	ALL 316		725
FE FX 802	6" ORIFICE FLANGES AND PLATE	1	STEEL W/ 316 PLATE		137
FI 803A - 803D	3/4" VARIABLE AREA FLOW INDICATOR	4	STEEL		600

FORM 39650 PRINTED IN U.S.A. R1-69

PRELIMINARY CAPITAL - DETAIL SHEET

THE DOW CHEMICAL COMPANY
MIDLAND, MICHIGAN

PROJECT: COAL - PYRITIC SULFUR REMOVAL - INSTRUMENTS
JOB NUMBER: 730623

PHASE: I
CASE: TASK 2
BY: R.W. CERMAK
DATE:
EF NUMBER: 657

SECTION NUMBER & NAME: 800-FILTER & DECANT
SECTOR NUMBER & NAME:

FACTORS: BASE X ESC. X CAPACITY X QUANT. X [MATERIAL + CONDITION + COMPLEXITY] = M$(19)

ITEM	NAME OF FACILITY	QUANT.	CONSTRUCTION MATERIAL	DESCRIPTION	
LRC 804	LEVEL RECORDER AND CONTROLLER W/ SHELF AND CABLES.	1	—	INTERFACE CONTROL	1175
LT 804	DIFFERENTIAL PRESSURE TYPE LEVEL TRANSMITTER W/ MANIFOLD.	1	ALL 316		725
LV 804	4"-150LB GLOBE TYPE CONTROL VALVE W/ I/P POSITIONER.	1	STEEL W/ 316 TRIM	C_V REQD = 160	1192
FR 805	FLOW RECORDER W/ SHELF AND CABLES	1	—		466
FT 805	DIFFERENTIAL PRESSURE TYPE FLOW TRANSMITTER W/ MANIFOLD.	1	ALL 316	ΔP = 20" WATER.	725
FE FX 805	4" ORIFICE FLANGES AND PLATE.	1	STEEL W/ 316 PLATE		101
LSH 806	HIGH LEVEL SWITCH	1	STEEL W/ 316 TRIM	5" DIA. FLOAT	250
LAH 806	ALARM ANNUNCIATOR POINT.	1	—		70
LS H/L 807A - 807D	HIGH/LOW PAN LEVEL ALARM SWITCHES	8	—	FURNISHED AS PART OF 800-F-1 SERIES FILTER CONTROLS.	—
LA H/L 807A - 807D	ALARM ANNUNCIATOR POINT	8	—		560
FR 808	FLOW RECORDER W/ SHELF AND CABLES	1	—		466

FORM 39650 PRINTED IN U.S.A. R1-69

PRELIMINARY CAPITAL - DETAIL SHEET

THE DOW CHEMICAL COMPANY
MIDLAND, MICHIGAN

SHEET 16 OF 36

PROJECT: COAL - PYRITIC SULFUR REMOVAL - INSTRUMENTS

JOB NUMBER: 730623

PHASE: I | CASE: TASK 2 | BY: R. W. CERMAK | DATE: | EF NUMBER: 657

SECTION NUMBER & NAME: 800- FILTER & DECANT

SECTOR NUMBER & NAME:

FACTORS: BASE X ESC. X CAPACITY X QUANT. X [MATERIAL + CONDITION + COMPLEXITY] = M$(19)

ITEM	NAME OF FACILITY	QUANT.	CONSTRUCTION MATERIAL	DESCRIPTION	
FT 808	DIFFERENTIAL PRESSURE TYPE FLOW TRANSMITTER W/MANIFOLD	1	ALL 316		725
FE FX 808	6" ORIFICE FLANGES AND PLATE	1	STEEL W/ 316 PLATE.		137
FFRC 809	FLOW RECORDER AND RATIO CONTROLLER W/ SHELF AND CABLES	1	—		1575
FT 809A	DIFFERENTIAL PRESSURE TYPE FLOW TRANSMITTER W/MANIFOLD	1	ALL 316		725
FT 809B	DIFFERENTIAL PRESSURE TYPE FLOW TRANSMITTER W/MANIFOLD.	1	ALL 316		725
FE FX 809A	6" ORIFICE FLANGES AND PLATE	1	STEEL W/ 316 PLATE		137
FE FX 809B	3" ORIFICE FLANGES AND PLATE	1	STEEL W/ 316 PLATE		97
FV 809	2"-150LB GLOBE TYPE CONTROL VALVE W/ I/P TRANDUCER	1	STEEL W/ 316 TRIM	C_V REQ'D = 32	702
FR 810	FLOW RECORDER W/ SHELF AND CABLES	1	—		466
FT 810	DIFFERENTIAL PRESSURE TYPE FLOW TRANSMITTER W/MANIFOLD.	1	ALL 316		725
FE FX 810	4" ORIFICE FLANGES AND PLATE.	1	STEEL W/ 316 PLATE		101

FORM 39650 PRINTED IN U.S.A. R1-69

PRELIMINARY CAPITAL - DETAIL SHEET

THE DOW CHEMICAL COMPANY
MIDLAND, MICHIGAN

SHEET 17 OF 36

PROJECT: COAL - PYRITIC SULFUR REMOVAL - INSTRUMENTS | JOB NUMBER: 730623

PHASE: I | CASE: TASK 2 | BY: R.W. CERMAK | DATE: | EF NUMBER: 657

SECTION NUMBER & NAME: 800 - FILTER & DECANT | SECTOR NUMBER & NAME:

FACTORS: BASE X ESC. X CAPACITY X QUANT. X [MATERIAL + CONDITION + COMPLEXITY] = M$(19)

ITEM	NAME OF FACILITY	QUANT.	CONSTRUCTION MATERIAL	DESCRIPTION	= M$(19)
PI 811	4½" PRESSURE GAUGE W/ CAPILLARY TO REMOTE SEAL	1	TANTALUM DIAPHRAGM IN TEFLON SEAL		170
PI 812	4½" PRESSURE GAUGE	1	STEEL ELEMENT		25
TE TW	THERMOCOUPLE ELEMENT W/THERMOWELL, HEAD AND RECORDER POINT.	3	316 WELL		390
FE FX 813A - 813D	2" ORIFICE FLANGES AND PLATES	4	STEEL W/316 PLATE		280
FT 813A - 813D	DIFFERENTIAL PRESSURE TYPE FLOW TRANSMITTER W/MANIFOLD	4	ALL 316		2900
FRC 813A - 813D	FLOW RECORDER AND CONTROLLER W/SHELF AND CABLES	4	—		4700
FV 813A - 813D	1½"-150 LB GLOBE TYPE CONTROL VALVE W/I/P TRANSDUCER	4	STEEL W/ 316 TRIM		2624
					44,986
	PRORATE MISC				6,340
				TOTAL (PER TRAIN)	51,326

FORM 39650 PRINTED IN U.S.A. R1-69

PRELIMINARY CAPITAL - DETAIL SHEET

THE DOW CHEMICAL COMPANY
MIDLAND, MICHIGAN

SHEET 18 OF 36

PROJECT: COAL - PYRITIC SULFUR REMOVAL - INSTRUMENTS

JOB NUMBER: 730623

PHASE: I | CASE: TASK 2 | BY: R. W. CERMAK | DATE: | EF NUMBER: 657

SECTION NUMBER & NAME: 900 - DRYING & DECANT

SECTOR NUMBER & NAME:

FACTORS: BASE X ESC. X CAPACITY X QUANT. X [MATERIAL + CONDITION + COMPLEXITY] = M$(19)

ITEM	NAME OF FACILITY	QUANT.	CONSTRUCTION MATERIAL	DESCRIPTION	
FRC 900A 900B	FLOW RECORDER AND CONTROLLER W/ SHELF AND CABLES.	2	—		2350
FT 900A 900B	DIFFERENTIAL PRESSURE TYPE FLOW TRANSMITTER W/MANIFOLD.	2	ALL 316		1450
FE FX 900A 900B	2" ORIFICE FLANGES AND PLATE	2	STEEL W/ 316 PLATE		140
FS H/L 900A 900B	HIGH AND LOW FLOW ALARM SWITCHES	4	—		340
FA H/L 900A 900B	ALARM ANNUNCIATOR POINTS	4	—		280
FV 900A 900B	1"-150LB GLOBE TYPE CONTROL VALVE W/ I/P TRANSDUCER	2	STEEL W/ 316 TRIM	C_V REQ'D = ? (N_2 FLOW NOT SPECIFIED)	1054
PRC 901A 901B	PRESSURE RECORDER AND CONTROLLER W/ SHELF AND CABLES	2	—		2350
PT 901A 901B	LOW RANGE PRESSURE TRANSMITTER.	2	ALUMINUM AND RUBBER	RANGE - 0 TO 2" WATER, OR LESS.	1880
PSL 901A 901B	LOW PRESSURE ALARM SWITCH	2	—		170
PAL 901A 901B	ALARM ANNUNCIATOR POINT.	2	—		140
PV 901A 901B	3"-125LB WAFER TYPE BUTTERFLY CONTROL VALVE, W/ I/P POSITIONER	2	IRON W/ 316 TRIM	C_V REQ'D = ? (VENT FLOW NOT SPECIFIED)	1114

FORM 30650 PRINTED IN U.S.A. R1-69

PRELIMINARY CAPITAL - DETAIL SHEET

THE DOW CHEMICAL COMPANY
MIDLAND, MICHIGAN

SHEET 19 OF 36

PROJECT: COAL - PYRITIC SULFUR REMOVAL - INSTRUMENTS

JOB NUMBER: 730623

PHASE: I | CASE: TASK 2 | BY: R.W. CERMAK | DATE: | EF NUMBER: 657

SECTION NUMBER & NAME: 900 - DRYING & DECANT

SECTOR NUMBER & NAME:

FACTORS: BASE X ESC. X CAPACITY X QUANT. X [MATERIAL + CONDITION + COMPLEXITY] = M$(19)

ITEM	NAME OF FACILITY	QUANT.	CONSTRUCTION MATERIAL	DESCRIPTION	
AIS 902A 902B	OXYGEN INDICATOR W/ HIGH ALARM SWITCH.	2	—		1600
AE 902A 902B	POLAROGRAPHIC TYPE OXYGEN SENSOR	2	PVC AND TEFLON		200
AAH 902A 902B	ALARM ANNUNCIATOR POINT	2	—		140
TRC 903A 903B	TEMPERATURE RECORDER AND CONTROLLER	2	—	FURNISHED AS PART OF DRYER CONTROLS	—
TE TW 903A 903B	TEMPERATURE ELEMENT W/ WELL AND HEAD.	2	—	FURNISHED AS PART OF DRYER CONTROLS	—
TV 903A 903B	TEMPERATURE CONTROL VALVE	2	—	FURNISHED AS PART OF DRYER CONTROLS	—
FR 904	FLOW RECORDER W/ SHELF AND CABLES	1	—		466
FT 904	DIFFERENTIAL PRESSURE TYPE FLOW TRANSMITTER W/MANIFOLD.	1	ALL 316	$\Delta P = 20''$ WATER	725
FE FX 904	4" ORIFICE FLANGES AND PLATE.	1	STEEL W/ 316 PLATE		101
FR 905	FLOW RECORDER W/ SHELF AND CABLES	1	—		466
FT 905	DIFFERENTIAL PRESSURE TYPE FLOW TRANSMITTER W/ MANIFOLD	1	ALL 316	$\Delta P = 20''$ WATER	725

FORM 39650 PRINTED IN U.S.A. R1-69

PRELIMINARY CAPITAL - DETAIL SHEET

THE DOW CHEMICAL COMPANY
MIDLAND, MICHIGAN

SHEET 20 OF 36

PROJECT: COAL - PYRITIC SULFUR REMOVAL - INSTRUMENTS

JOB NUMBER: 730623

PHASE: I | CASE: TASK 2 | BY: R. W. CERMAK | DATE: | EF NUMBER: 657

SECTION NUMBER & NAME: 900 - DRYING & DECANT

SECTOR NUMBER & NAME:

FACTORS: BASE X ESC. X CAPACITY X QUANT. X [MATERIAL + CONDITION + COMPLEXITY] = M$(19)

ITEM	NAME OF FACILITY	QUANT.	CONSTRUCTION MATERIAL	DESCRIPTION	
FE FX 905	2" ORIFICE FLANGES AND PLATE	1	STEEL W/ 316 PLATE		70
LSH 906	HIGH LEVEL SWITCH	1	STEEL W/ 316 TRIM	5" DIA. FLOAT	250
LAH 906	ALARM ANNUNCIATOR POINT.	1	—		70
PI 907	4½" PRESSURE GAUGE	1	STEEL ELEMENT		25
TE TW	THERMOCOUPLE ELEMENT W/ THERMOWELL, HEAD AND RECORDER POINT	9	316 WELLS		1170
					17,276
	PRORATE MISC				2435
				TOTAL (PER TRAIN)	19,711

FORM 39650 PRINTED IN U.S.A. R1-69

PRELIMINARY CAPITAL - DETAIL SHEET

THE DOW CHEMICAL COMPANY
MIDLAND, MICHIGAN

SHEET 21 OF 36

PROJECT: COAL - PYRITIC SULFUR REMOVAL - INSTRUMENTS | JOB NUMBER: 730623

PHASE: I | CASE: TASK 2 | BY: R.W. CERMAK | DATE: | EF NUMBER: 657

SECTION NUMBER & NAME: 1100-IRON SULFATE REMOVAL | SECTOR NUMBER & NAME:

FACTORS: BASE X ESC. X CAPACITY X QUANT. X [MATERIAL + CONDITION + COMPLEXITY] = M$(19)

ITEM	NAME OF FACILITY	QUANT.	CONSTRUCTION MATERIAL	DESCRIPTION	
FRC 1100A 1100B	FLOW RECORDER AND CONTROLLER W/ SHELF AND CABLES.	2	—		2350
FT 1100A 1100B	FLOW-TO-CURRENT CONVERTER W/ 100FT OF CABLE.	2	—		1698
FE 1100A 1100B	3" MAGNETIC FLOW-METER	2	TEFLON W/ TANTALUM ELECTRODES		2720
FV 1100A 1100B	3"-150LB BALL TYPE CONTROL VALVE W/ I/P TRANSDUCER	2	ALL 316	C_V REQ'D = 90	1824
LS H/L 1101A 1101B	HIGH/LOW PAN LEVEL ALARM SWITCHES	4	—	FURNISHED AS PART OF 1100-F-1 SERIES FILTER CONTROLS	—
LA H/L 1101A 1101B	ALARM ANNUNCIATOR POINTS	4	—		280
LRC 1102	LEVEL RECORDER AND CONTROLLER W/ SHELF AND CABLES	1	—		1175
LT 1102	FLUSH DIAPHRAGM TYPE LEVEL TRANSMITTER	1	TANTALUM		785
LV 1102	2"-150LB GLOBE TYPE CONTROL VALVE W/ I/P POSITIONER	1	ALL 316	C_V REQD = 40	1057
TRC 1103	TEMPERATURE RECORDER AND CONTROLLER W/ SHELF AND CABLES.	1	—		1175
TT 1103	RESISTANCE-TO-CURRENT CONVERTER	1	—		535

FORM 39650 PRINTED IN U.S.A. R1-69

PRELIMINARY CAPITAL - DETAIL SHEET

THE DOW CHEMICAL COMPANY
MIDLAND, MICHIGAN

SHEET 22 OF 36

PROJECT: COAL - PYRITIC SULFUR REMOVAL - INSTRUMENTS | JOB NUMBER: 730623

PHASE: I | CASE: TASK 2 | BY: R.W. CERMAK | DATE: | EF NUMBER: 657

SECTION NUMBER & NAME: 1100-IRON SULFATE REMOVAL | SECTOR NUMBER & NAME:

FACTORS: BASE X ESC. X CAPACITY X QUANT. X [MATERIAL + CONDITION + COMPLEXITY] = M$(19)

ITEM	NAME OF FACILITY	QUANT.	CONSTRUCTION MATERIAL	DESCRIPTION	
TE TW 1103	RESISTANCE THERMOMETER ELEMENT W/ WELL AND HEAD	1	316 WELL	24" LG WELL, 2"-150LB FLG	144
TV 1103	3"-150LB H.D. WAFER BUTTERFLY CONTROL VALVE W/ I/P POSITIONER	1	ALL 316	C_V REQ'D = 110	957
FRC 1104	FLOW RECORDER AND CONTROLLER W/ SHELF AND CABLES	1	—		1175
FT 1104	DIFFERENTIAL PRESSURE TYPE FLOW TRANSMITTER W/ MANIFOLD	1	ALL 316		725
FE FX 1104	12" ORIFICE FLANGES AND PLATE.	1	STEEL W/ 316 PLATE	ΔP = 200" WATER	455
FV 1104	10"-150LB H.D. WAFER BUTTERFLY CONTROL VALVE W/ I/P TRANSDUCER	1	STEEL W/ 17-4PH SHAFT	C_V REQ'D = 750	1652
PRC 1105	PRESSURE RECORDER AND CONTROLLER W/ SHELF AND CABLES.	1	—		1175
PT 1105	FLUSH DIAPHRAGM TYPE PRESSURE TRANSMITTER.	1	TANTALUM	0 TO 822" WATER (0-30PSIG)	840
PV 1105	8"-150LB H.D. WAFER BUTTERFLY CONTROL VALVE W/ I/P TRANSDUCER	1	ALL 316	C_V REQD = 1600	1847
LRC 1106	LEVEL RECORDER AND CONTROLLER W/ SHELF AND CABLES.	1	—		1175
LT 1106	FLUSH DIAPHRAGM TYPE LEVEL TRANSMITTER	1	TANTALUM		790

FORM 39650 PRINTED IN U.S.A. R1-69

PRELIMINARY CAPITAL - DETAIL SHEET

THE DOW CHEMICAL COMPANY
MIDLAND, MICHIGAN

SHEET 23 OF 36

PROJECT: COAL - PYRITIC SULFUR REMOVAL - INSTRUMENTS

JOB NUMBER: 730623

PHASE: I | CASE: TASK 2 | BY: R. W. CERMAK | DATE: | EF NUMBER: 657

SECTION NUMBER & NAME: 1100-IRON SULFATE REMOVAL

SECTOR NUMBER & NAME:

FACTORS: BASE X ESC. X CAPACITY X QUANT. X [MATERIAL + CONDITION + COMPLEXITY] = M$(19)

ITEM	NAME OF FACILITY	QUANT.	CONSTRUCTION MATERIAL	DESCRIPTION	
PT 1106	FLUSH DIAPHRAGM TYPE PNEUMATIC PRESSURE REPEATER	1	TANTALUM		600
LSH 1106	HIGH LEVEL ALARM	1	—		85
LAH 1106	ALARM ANNUNCIATOR POINT	1	—		70
TRC 1107	TEMPERATURE RECORDER AND CONTROLLER W/ SHELF AND CABLES.	1	—		1175
TT 1107	RESISTANCE-TO-CURRENT CONVERTER	1	—		535
TE TW 1107	RESISTANCE THERMOMETER ELEMENT W/ WELL AND HEAD	1	316 WELL		134
TV 1107	3"-150LB GLOBE TYPE CONTROL VALVE W/ I/P POSITIONER.	1	STEEL W/ 316 TRIM	C_V REQ'D = 100	947
FRC 1108	FLOW RECORDER AND CONTROLLER W/ SHELF AND CABLES.	1	—		1175
FT 1108	FLOW-TO-CURRENT CONVERTER W/ 100FT OF CABLE.	1	—		849
FE 1108	2" MAGNETIC FLOWMETER	1	TEFLON W/ TANTALUM ELECTRODES		1080
FV 1108	1½"-150LB BALL TYPE CONTROL VALVE W/ I/P TRANSDUCER	1	ALL 316	C_V REQ'D = 20	622

FORM 39650 PRINTED IN U.S.A. R1-69

PRELIMINARY CAPITAL - DETAIL SHEET

THE DOW CHEMICAL COMPANY
MIDLAND, MICHIGAN

PROJECT: COAL - PYRITIC SULFUR REMOVAL - INSTRUMENTS | JOB NUMBER: 730623

PHASE: I | CASE: TASK 2 | BY: R.W. CERMAK | DATE: | EF NUMBER: 657

SECTION NUMBER & NAME: 1100-IRON SULFATE REMOVAL | SECTOR NUMBER & NAME:

FACTORS: BASE X ESC. X CAPACITY X QUANT. X [MATERIAL + CONDITION + COMPLEXITY] = M$(19)

ITEM	NAME OF FACILITY	QUANT.	CONSTRUCTION MATERIAL	DESCRIPTION	
LC 1109	LEVEL CONTROLLER	1	—	FURNISHED AS PART OF 1100-F-2 FILTER CONTROLS.	—
LV 1109	LEVEL CONTROL VALVE	1	—	FURNISHED AS PART OF 1100-F-2 FILTER CONTROLS.	—
LS H/L 1110	HIGH/LOW PAN LEVEL ALARM SWITCHES	2	—	FURNISHED AS PART OF 1100-F-2 FILTER CONTROLS	—
LA H/L 1110	ALARM ANNUNCIATOR POINTS	2	—		140
FR 1111	FLOW RECORDER W/ SHELF AND CABLES	1	—		466
FT 1111	DIFFERENTIAL PRESSURE TYPE FLOW TRANSMITTER W/ MANIFOLD.	1	ALL 316		725
FE FX 1111	2" ORIFICE FLANGES AND PLATE	1	304 FLANGES W/ 316 PLATE		237
FRC 1112	FLOW RECORDER AND CONTROLLER W/ SHELF AND CABLES.	1	—		1175
FT 1112	DIFFERENTIAL PRESSURE TYPE FLOW TRANSMITTER W/ MANIFOLD.	1	ALL 316		725
FE FX 1112	1" ORIFICE FLANGES AND PLATE	1	304 FLANGES W/ 316 PLATE		166
FV 1112	1"-150LB GLOBE TYPE CONTROL VALVE W/ I/P TRANSDUCER.		ALL 316	C_v REQ'D = 1.6	682

FORM 39650 PRINTED IN U.S.A. R1-69

PRELIMINARY CAPITAL - DETAIL SHEET

THE DOW CHEMICAL COMPANY
MIDLAND, MICHIGAN

SHEET 25 OF 36

PROJECT: COAL - PYRITIC SULFUR REMOVAL - INSTRUMENTS

JOB NUMBER: 730623

PHASE: I | CASE: TASK 2 | BY: R.W. CERMAK | DATE: | EF NUMBER: 657

SECTION NUMBER & NAME: 1100 - IRON SULFATE REMOVAL

SECTOR NUMBER & NAME:

FACTORS: BASE X ESC. X CAPACITY X QUANT. X [MATERIAL + CONDITION + COMPLEXITY] = M$(19)

ITEM	NAME OF FACILITY	QUANT.	CONSTRUCTION MATERIAL	DESCRIPTION	
LS H/L 1113	HIGH/LOW LEVEL SWITCH.	1	STEEL AND PORCELAIN W/ 316 TRIM	DISPLACEMENT TYPE	250
LA H/L 1113	ALARM ANNUNCIATOR POINTS	2	—		140
LRC 1114	LEVEL RECORDER AND CONTROLLER W/ SHELF AND CABLES.	1	—		1175
LT 1114	DIFFERENTIAL PRESSURE TYPE LEVEL TRANSMITTER W/ MANIFOLD.	1	ALL 316		725
LV 1114	1"-150LB GLOBE TYPE CONTROL VALVE W/ I/P POSITIONER.	1	STEEL W/ 316 TRIM	C_V REQ'D = 5.5	597
FRC 1115	FLOW RECORDER AND CONTROLLER W/ SHELF AND CABLES.	1	—		1175
FT 1115	FLOW - TO - CURRENT CONVERTER W/ 100FT OF CABLE	1	—		849
FE 1115	3" MAGNETIC FLOW-METER	1	TEFLON W/ TANTALUM ELECTRODES		1125
FV 1115	3"-150LB BALL TYPE CONTROL VALVE W/ I/P TRANSDUCER.	1	ALL 316	C_V REQ'D = 110	912
AR 1116	HYDROGEN-ION CONCENTRATION RECORDER W/ SHELF AND CABLES	1	—		466
AIT 1116	HYDROGEN-ION INDICATING TRANSMITTER W/ HIGH/LOW ALARM SWITCH	1	—		700

FORM 39630 PRINTED IN U.S.A. R1-69

PRELIMINARY CAPITAL - DETAIL SHEET THE DOW CHEMICAL COMPANY MIDLAND, MICHIGAN

PROJECT: COAL - PYRITIC SULFUR REMOVAL - INSTRUMENTS | JOB NUMBER: 730623

PHASE: I | CASE: TASK 2 | BY: R. W. CERMAK | DATE: | EF NUMBER: 657

SECTION NUMBER & NAME: 1100 - IRON SULFATE REMOVAL | SECTOR NUMBER & NAME:

FACTORS: BASE X ESC. X CAPACITY X QUANT. X [MATERIAL + CONDITION + COMPLEXITY] = M$(19)

ITEM	NAME OF FACILITY	QUANT.	CONSTRUCTION MATERIAL	DESCRIPTION	
AE 1116	HYDROGEN-ION SENSOR W/ELECTRODES AND PREAMPLIFIER	1	PVC AND GLASS	FLOW-THRU TYPE	400
AA H/L 1116	ALARM ANNUNCIATOR POINTS	2	—		140
LR 1117	LEVEL RECORDER W/ SHELF AND CABLES.	1	—		466
LT 1117	FLUSH DIAPHRAGM TYPE LEVEL TRANSMITTER	1	ALL 316		720
FRC 1118	FLOW RECORDER AND CONTROLLER W/ SHELF AND CABLES	1	—		1175
FT 1118	DIFFERENTIAL PRESSURE TYPE FLOW TRANSMITTER W/ MANIFOLD.	1	ALL 316		725
FE FX 1118	2" ORIFICE FLANGES AND PLATE	1	STEEL W/ 316 PLATE		70
FV 1118	1"-150LB GLOBE TYPE CONTROL VALVE W/ I/P TRANSDUCER	1	STEEL W/ 316 TRIM	C_V REQ'D = 1.7	527
LS H/L 1119	HIGH/LOW LEVEL SWITCH	1	STEEL AND PORCELAIN W/ 316 TRIM	DISPLACEMENT TYPE	250
LA H/L 1119	ALARM ANNUNCIATOR POINTS	2	—		140
PI 1121 1123	$4\frac{1}{2}$" PRESSURE GAUGES	2	STEEL ELEMENT		50

FORM 39650 PRINTED IN U.S.A. R1-68

PRELIMINARY CAPITAL - DETAIL SHEET

THE DOW CHEMICAL COMPANY
MIDLAND, MICHIGAN

SHEET 27 OF 36

PROJECT: COAL - PYRITIC SULFUR REMOVAL - INSTRUMENTS

JOB NUMBER: 730623

PHASE: I

CASE: TASK 2

BY: R.W. CERMAK

DATE:

EF NUMBER: 657

SECTION NUMBER & NAME: 1100 - IRON SULFATE REMOVAL

SECTOR NUMBER & NAME:

FACTORS: BASE X ESC. X CAPACITY X QUANT. X [MATERIAL + CONDITION + COMPLEXITY] = M$(19)

ITEM	NAME OF FACILITY	QUANT.	CONSTRUCTION MATERIAL	DESCRIPTION	
PI 1120 1122	4½" PRESSURE GAUGE W/ CAPILLARY TO REMOTE SEAL.	2	TANTALUM DIAPHRAGM IN TEFLON SEAL		340
TE TW	THERMOCOUPLE ELEMENT W/ THERMOWELL, HEAD AND RECORDER POINT.	1	TITANIUM WELL		250
TE TW	THERMOCOUPLE ELEMENT W/ THERMOWELL, HEAD AND RECORDER POINT.	1	316 WELL		130
					49,619
	PRORATE MISC				6,993
				TOTAL (PER TRAIN)	56,612

FORM 39650 PRINTED IN U.S.A. R1-69

PRELIMINARY CAPITAL - DETAIL SHEET

THE DOW CHEMICAL COMPANY
MIDLAND, MICHIGAN

PROJECT: COAL - PYRITIC SULFUR REMOVAL - INSTRUMENTS
JOB NUMBER: 730623
PHASE: I
CASE: TASK 2
BY: R. W. CERMAK
DATE:
EF NUMBER: 657
SECTION NUMBER & NAME: 1400- DISTILLATION
SECTOR NUMBER & NAME:

FACTORS: BASE X ESC. X CAPACITY X QUANT. X [MATERIAL + CONDITION + COMPLEXITY] = M$(19)

ITEM	NAME OF FACILITY	QUANT.	CONSTRUCTION MATERIAL	DESCRIPTION	
LR 1400	LEVEL RECORDER W/ SHELF AND CABLES	1	—		466
LT 1400	DIFFERENTIAL PRESSURE TYPE LEVEL TRANSMITTER W/ MANIFOLD.	1	ALL 316		855
LRC 1401	LEVEL RECORDER AND CONTROLLER W/ SHELF AND CABLES.	1	—		1175
LT 1401	DIFFERENTIAL PRESSURE TYPE LEVEL TRANSMITTER W/ MANIFOLD.	1	ALL 316		725
TCV 1402	1/2" SELF-OPERATED TEMPERATURE CONTROL VALVE	1	316 W/ 316 TRIM	C_v REQ'D = 4.5	350
TE TW 1402	TEMPERATURE BULB, WELL AND CAPILLARY	1	ALL 304	INTEGRAL PART OF TCV-1402 ABOVE	—
FRC 1403	FLOW RECORDER AND CONTROLLER W/ SHELF AND CABLES.	1	—		1175
FT 1403	DIFFERENTIAL PRESSURE TYPE FLOW TRANSMITTER W/ MANIFOLD	1	ALL 316		725
FE FX 1403	6" ORIFICE FLANGES AND PLATE	1	STEEL W/ 316 PLATE		137
FV 1403	4"-150LB GLOBE TYPE CONTROL VALVE W/ I/P TRANSDUCER	1	STEEL W/ 316 TRIM	C_v REQD = 130	1122
PRC 1404	PRESSURE RECORDER AND CONTROLLER W/ SHELF AND CABLES	1	—		1175

FORM 39650 PRINTED IN U.S.A. R1-69

PRELIMINARY CAPITAL - DETAIL SHEET

THE DOW CHEMICAL COMPANY
MIDLAND, MICHIGAN

SHEET 29 OF 36

PROJECT: COAL - PYRITIC SULFUR REMOVAL - INSTRUMENTS

JOB NUMBER: 730623

PHASE: I | CASE: TASK 2 | BY: R.W. CERMAK | DATE: | EF NUMBER: 657

SECTION NUMBER & NAME: 1400 - DISTILLATION

SECTOR NUMBER & NAME:

FACTORS: BASE X ESC. X CAPACITY X QUANT. X [MATERIAL + CONDITION + COMPLEXITY] = M$(19)

ITEM	NAME OF FACILITY	QUANT.	CONSTRUCTION MATERIAL	DESCRIPTION	
PT 1404	DIAPHRAGM TYPE PRESSURE TRANSMITTER	1	ALL 316		535
PV 1404	1"-150LB GLOBE TYPE CONTROL VALVE W/ I/P POSITIONER.	1	STEEL W/ 316 TRIM	C_V REQ'D = ? (VENT FLOW NOT SPECIFIED)	597
TRC 1405	TEMPERATURE RECORDER AND CONTROLLER W/ SHELF AND CABLES	1	—		1175
TT 1405	RESISTANCE - TO - CURRENT CONVERTER	1	—		535
TE TW 1405	RESISTANCE THERMOMETER ELEMENT W/ WELL AND HEAD.	1	316 WELL		134
TV 1405	6"-125LB H.D. WAFER BUTTERFLY CONTROL VALVE W/ I/P POSITIONER.	1	IRON AND STEEL W/ 316 TRIM	C_V REQ'D = 600	917
LRC 1406	LEVEL RECORDER AND CONTROLLER W/ SHELF AND CABLES	1			1175
LT 1406	DIFFERENTIAL PRESSURE TYPE LEVEL TRANSMITTER W/ MANIFOLD.	1	ALL 316		725
LV 1406	3"-150LB GLOBE TYPE CONTROL VALVE W/ I/P POSITIONER.	1	STEEL W/ 316 TRIM	C_V REQ'D = 75	1017
FR 1407	FLOW RECORDER W/ SHELF AND CABLES	1	—		466
FT 1407	DIFFERENTIAL PRESSURE TYPE FLOW TRANSMITTER W/ MANIFOLD.	1	ALL 316		725

FORM 39650 PRINTED IN U.S.A. R1-69

PRELIMINARY CAPITAL - DETAIL SHEET

THE DOW CHEMICAL COMPANY
MIDLAND, MICHIGAN

SHEET 30 OF 36

PROJECT: COAL - PYRITIC SULFUR REMOVAL - INSTRUMENTS

JOB NUMBER: 730623

PHASE: I | CASE: TASK 2 | BY: R.W. CERMAK | DATE: | EF NUMBER: 657

SECTION NUMBER & NAME: 1400-DISTILLATION

SECTOR NUMBER & NAME:

FACTORS: BASE X ESC. X CAPACITY X QUANT. X [MATERIAL + CONDITION + COMPLEXITY] = M$(19)

ITEM	NAME OF FACILITY	QUANT.	CONSTRUCTION MATERIAL	DESCRIPTION	
FE FX 1407	6" ORIFICE FLANGES AND PLATE	1	STEEL W/ 316 PLATE		137
FRC 1408	FLOW RECORDER AND CONTROLLER W/ SHELF AND CABLES.	1	—		1175
FT 1408	DIFFERENTIAL PRESSURE TYPE FLOW TRANSMITTER W/ MANIFOLD.	1	ALL 316		725
FE FX 1408	6" ORIFICE FLANGES AND PLATE	1	STEEL W/ 316 PLATE		137
FV 1408	4"-150LB GLOBE TYPE CONTROL VALVE W/ I/P TRANSDUCER	1	STEEL W/ 316 TRIM	C_V REQD = 120	1122
TRC 1409	TEMPERATURE RECORDER AND CONTROLLER W/ SHELF AND CABLES	1	—		1175
TT 1409	RESISTANCE-TO-CURRENT CONVERTER	1	—		535
TE TW 1409	RESISTANCE THERMOMETER ELEMENT W/ WELL AND HEAD.	1	316 WELL		134
TV 1409	6"-125 LB H.D. WAFER BUTTERFLY CONTROL VALVE W/ I/P POSITIONER	1	IRON AND STEEL W/ 316 TRIM	C_V REQD = 600	917
LR 1410	LEVEL RECORDER W/ SHELF AND CABLES	1	—		466
LT 1410	DIFFERENTIAL PRESSURE TYPE LEVEL TRANSMITTER W/ MANIFOLD.	1	ALL 316		725

FORM 20650 PRINTED IN U.S.A. R1-69

PRELIMINARY CAPITAL - DETAIL SHEET

THE DOW CHEMICAL COMPANY
MIDLAND, MICHIGAN

PROJECT: COAL - PYRITIC SULFUR REMOVAL - INSTRUMENTS | JOB NUMBER: 730623

PHASE: I | CASE: TASK 2 | BY: R.W. CERMAK | DATE: | EF NUMBER: 657

SECTION NUMBER & NAME: 1400- DISTILLATION | SECTOR NUMBER & NAME:

FACTORS: BASE X ESC. X CAPACITY X QUANT. X [MATERIAL + CONDITION + COMPLEXITY] = M$(19)

ITEM	NAME OF FACILITY	QUANT.	CONSTRUCTION MATERIAL	DESCRIPTION	
LR 1411	LEVEL RECORDER W/ SHELF AND CABLES	1	—		466
LT 1411	DIFFERENTIAL PRESSURE TYPE LEVEL TRANSMITTER W/MANIFOLD.	1	ALL 316		855
LRC 1412	LEVEL RECORDER AND CONTROLLER W/ SHELF AND CABLES.	1	—	INTERFACE CONTROL	1175
LT 1412	FLUSH DIAPHRAGM TYPE LEVEL TRANSMITTER.	1	ALL 316		720
LV 1412	1"-150 LB JACKETED GLOBE TYPE CONTROL VALVE W/ I/P POSITIONER	1	STEEL W/ 316 TRIM	C_V REQ'D = 1.2	877
FRC 1413	FLOW RECORDER AND CONTROLLER W/ SHELF AND CABLES.	1	—		1175
FT 1413	DIFFERENTIAL PRESSURE TYPE FLOW TRANSMITTER W/MANIFOLD	1	ALL 316		725
FE FX 1413	8" ORIFICE FLANGES AND PLATE	1	STEEL W/ 316 PLATE		174
FV 1413	6"-125 LB H.D. WAFER BUTTERFLY CONTROL VALVE W/ I/P TRANSDUCER.	1	IRON AND STEEL W/ 316 TRIM	C_V REQ'D = 425	847
TRC 1414	TEMPERATURE RECORDER AND CONTROLLER W/ SHELF AND CABLES	1	—		1175
TT 1414	RESISTANCE - TO - CURRENT CONVERTOR	1	—		535

FORM 39650 PRINTED IN U.S.A. R1-69

PRELIMINARY CAPITAL - DETAIL SHEET

THE DOW CHEMICAL COMPANY
MIDLAND, MICHIGAN

SHEET 32 OF 36

PROJECT: COAL - PYRITIC SULFUR REMOVAL - INSTRUMENTS
JOB NUMBER: 730623

PHASE: I
CASE: TASK 2
BY: R. W. CERMAK
DATE:
EF NUMBER: 657

SECTION NUMBER & NAME: 1400- DISTILLATION
SECTOR NUMBER & NAME:

FACTORS: BASE X ESC. X CAPACITY X QUANT. X [MATERIAL + CONDITION + COMPLEXITY] = M$(19)

ITEM	NAME OF FACILITY	QUANT.	CONSTRUCTION MATERIAL	DESCRIPTION	
TE TW 1414	RESISTANCE THERMOMETER ELEMENT W/ WELL AND HEAD.	1	316 WELL	24" LG WELL, 2"-150LB FLG	144
TV 1414	1"-150LB GLOBE TYPE CONTROL VALVE W/ I/P POSITIONER	1	STEEL W/ 316 TRIM	C_V REQD = 3.0	597
LS H/L 1415	HIGH/LOW LEVEL SWITCH.	1	STEEL AND PORCELAIN W/ 316 TRIM	DISPLACEMENT TYPE	250
LA H/L 1415	ALARM ANNUNCIATOR POINTS	2	—		140
LS H/L 1416	HIGH/LOW LEVEL SWITCH	1	STEEL AND PORCELAIN W/ 316 TRIM	DISPLACEMENT TYPE	250
LA H/L 1416	ALARM ANNUNCIATOR POINTS	2	—		140
LSH 1417	HIGH LEVEL SWITCH	1	STEEL W/ 316 TRIM	5" DIA. FLOAT	250
LAH 1417	ALARM ANNUNCIATOR POINT	1	—		70
LS H/L 1418	HIGH/LOW LEVEL SWITCH	1	STEEL AND PORCELAIN W/ 316 TRIM	DISPLACEMENT TYPE	250
LA H/L 1418	ALARM ANNUNCIATOR POINTS	2	—		140
PI 1420 1422 1423 1424	4½" PRESSURE GAUGES	4	STEEL ELEMENT		100

FORM 3963C PRINTED IN U.S.A. R1-69

PRELIMINARY CAPITAL - DETAIL SHEET

THE DOW CHEMICAL COMPANY
MIDLAND, MICHIGAN

SHEET 33 OF 36

PROJECT: COAL - PYRITIC SULFUR REMOVAL - INSTRUMENTS | JOB NUMBER: 730623

PHASE: I | CASE: TASK 2 | BY: R.W. CERMAK | DATE: | EF NUMBER: 657

SECTION NUMBER & NAME: 1400 - DISTILLATION | SECTOR NUMBER & NAME:

FACTORS: BASE X ESC. X CAPACITY X QUANT. X [MATERIAL + CONDITION + COMPLEXITY] = M$(19)

ITEM	NAME OF FACILITY	QUANT.	CONSTRUCTION MATERIAL	DESCRIPTION	
PI 1421	4½" PRESSURE GAUGE W/ CAPILLARY TO REMOTE SEAL.	1	316 DIAPHRAGM AND SEAL		170
TE TW	THERMOCOUPLE ELEMENT W/THERMOWELL, HEAD AND RECORDER POINT	6	316 WELLS		780
TSL 1419	NON-INDICATING LOW TEMPERATURE SWITCH	1	—	W/ INTERNAL ADJUSTMENT	100
TE TW 1419	TEMPERATURE BULB, WELL AND CAPILLARY	1	ALL 304	INTEGRAL PART OF TSL-1419 ABOVE	—
TAL 1419	ALARM ANNUNCIATOR POINT	1	—		70
					35,329
	PRORATE MISC				4,979
				TOTAL (PER TRAIN)	40,308

FORM 38650 PRINTED IN U.S.A. R1-69

PRELIMINARY CAPITAL - DETAIL SHEET THE DOW CHEMICAL COMPANY MIDLAND, MICHIGAN

PROJECT: COAL - PYRITIC SULFUR REMOVAL - INSTRUMENTS | JOB NUMBER: 730623

PHASE: I | CASE: TASK 2 | BY: R. W. CERMAK | DATE: | EF NUMBER: 657

SECTION NUMBER & NAME: 1500 - VENT COLLECT & SCRUB. | SECTOR NUMBER & NAME:

FACTORS: BASE X ESC. X CAPACITY X QUANT. X [MATERIAL + CONDITION + COMPLEXITY] = M$(19)

ITEM	NAME OF FACILITY	QUANT.	CONSTRUCTION MATERIAL	DESCRIPTION	
LRC 1500	LEVEL RECORDER AND CONTROLLER W/ SHELF AND CABLES	1	—		1175
LT 1500	DIFFERENTIAL PRESSURE TYPE LEVEL TRANSMITTER W/ MANIFOLD	1	ALL 316		725
LV 1500	1"-150LB GLOBE TYPE CONTROL VALVE W/ I/P POSITIONER	1	STEEL W/ 316 TRIM	C_V REQ'D = ? (FLOW NOT SPECIFIED)	597
AR 1501	HYDROGEN-ION CONCENTRATION RECORDER W/ SHELF AND CABLES	1	—		466
AIT 1501	HYDROGEN-ION INDICATING TRANSMITTER W/ LOW ALARM SWITCH.	1	—		700
AE 1501	HYDROGEN-ION SENSOR W/ELECTRODES AND PREAMPLIFIER.	1	PVC AND GLASS	FLOW-THRU TYPE	400
AAL 1501	ALARM ANNUNCIATOR POINT.	1	—		70
LRC 1502	LEVEL RECORDER AND CONTROLLER W/ SHELF AND CABLES.	1	—		1175
LT 1502	DIFFERENTIAL PRESSURE TYPE LEVEL TRANSMITTER W/ MANIFOLD.	1	ALL 316		725
LV 1502	1"-150LB GLOBE TYPE CONTROL VALVE W/ I/P POSITIONER	1	STEEL W/ 316 TRIM	C_V REQ'D = ? (FLOW NOT SPECIFIED)	597
AR 1503	CONDUCTIVITY RECORDER W/SHELF AND CABLES	1	—		466

FORM 39650 PRINTED IN U.S.A. R1-69

PRELIMINARY CAPITAL - DETAIL SHEET

THE DOW CHEMICAL COMPANY
MIDLAND, MICHIGAN

SHEET 35 OF 36

PROJECT: COAL - PYRITIC SULFUR REMOVAL - INSTRUMENTS

JOB NUMBER: 730623

PHASE: I | CASE: TASK 2 | BY: R.W. CERMAK | DATE: | EF NUMBER: 657

SECTION NUMBER & NAME: 1500 - VENT COLLECT & SCRUB

SECTOR NUMBER & NAME:

FACTORS: BASE X ESC. X CAPACITY X QUANT. X [MATERIAL + CONDITION + COMPLEXITY] = M$(19)

ITEM	NAME OF FACILITY	QUANT.	CONSTRUCTION MATERIAL	DESCRIPTION	
AIT 1503	CONDUCTIVITY INDICATING TRANSMITTER W/ LOW ALARM SWITCH.	1	—		500
AE 1503	CONDUCTIVITY SENSOR W/ ELECTRODES AND SAMPLE CHAMBER	1	PVC AND CARBON	FLOW-THRU TYPE	175
AAL 1503	ALARM ANNUNCIATOR POINT	1	—		70
LS H/L 1504	HIGH/LOW LEVEL SWITCH	1	STEEL AND PORCELAIN W/ 316 TRIM	DISPLACEMENT TYPE	250
LA H/L 1504	ALARM ANNUNCIATOR POINTS	2	—		140
PI 1505 1506	4½" PRESSURE GAUGES	2	STEEL ELEMENT		50
TE TW	THERMOCOUPLE ELEMENT W/ THERMOWELL, HEAD AND RECORDER POINT	2	316 WELLS		260
					8,541
	PRORATE MISC				1,204
				TOTAL (PER TRAIN)	9,745

FORM 39650 PRINTED IN U.S.A. R1-69

PRELIMINARY CAPITAL - DETAIL SHEET

THE DOW CHEMICAL COMPANY
MIDLAND, MICHIGAN

SHEET 36 OF 36

PROJECT: COAL - PYRITIC SULFUR REMOVAL - INSTRUMENTS

JOB NUMBER: 730623

PHASE: I | CASE: TASK 2 | BY: R. W. CERMAK | DATE: | EF NUMBER: 657

SECTION NUMBER & NAME: MISCELLANEOUS INSTRUMENTS

SECTOR NUMBER & NAME:

FACTORS: BASE X ESC. X CAPACITY X QUANT. X [MATERIAL + CONDITION + COMPLEXITY] = M$(19)

ITEM	NAME OF FACILITY	QUANT.	CONSTRUCTION MATERIAL	DESCRIPTION	
TR	TEMPERATURE RECORDER 24 POINT, WIDE STRIP CHART FOR THERMOCOUPLES	3	—	COSTS PRORATED TO INDIVIDUAL SECTORS ON BASIS OF NUMBER OF RECORDED POINTS	—
TE TW FOR ABOVE	THERMOCOUPLE ELEMENT W/ THERMOWELL AND JUNCTION HEAD	69	AS NOTED	ELEMENTS AND COSTS LISTED UNDER INDIVIDUAL SECTORS.	—
TI	TEMPERATURE INDICATOR 50 POINT, DIGITAL READOUT W/ OPTIONAL LOGGER.	1	—		3500
TE TW FOR ABOVE	THERMOCOUPLE ELEMENT W/ THERMOWELL AND JUNCTION HEAD.	50	WELL MATERIAL AS REQUIRED		6500
	ENCLOSED PANELBOARD CONSISTING OF 23 TWO-FOOT WIDE SECTIONS, COMPLETE WITH ALL ACCESSORIES	1		INCLUDES ANNUNCIATOR PILOT LIGHTS, PUSHBUTTONS AND ALL INSTRUMENTS INSTALLED AND WIRED	50,600
					60,600
	PRORATE TO	SECTORS			60,600
					-0-

FORM 39650 PRINTED IN U.S.A. R1-69

Table 25. SUMMARY OF INSTRUMENTATION COSTS BY SECTORS

SECTOR	ALARM POINTS	TEMP. POINTS[a]	PANEL SPACES	PANEL SECTIONS (2FT. WIDE)	MISCEL-LANEOUS INSTRUMENTS COST	INSTRUMENT COST (EX MISC)	INSTRUMENT COSTS (INCL MISC)
100	1	1	15	1	$ 2,058	$ 14,600	$ 16,658
200	10	43	176	10	27,616	195,957	223,573
400	8	0	17	1	3,131	22,219	25,350
500	2	1	11	2	1,431	10,153	11,584
600	13	1	23		3,873	27,482	31,355
700	2	1	5	2	540	3,835	4,375
800	13	3	28		6,340	44,986	51,326
900	9	9	16	1	2,435	17,276	19,711
1100	13	2	45	3	6,993	49,619	56,612
1400	8	6	38	3	4,979	35,329	40,308
1500	4	2	10		1,204	8,541	9,745
TOTAL	83	69	384	23	$60,600	$429,997	$ 490,597
INSTALLATION							613,246
TOTAL INSTALLED COST (PER TRAIN)							$1,103,843

[a]Temperature point count is for temperature recorders (TR's) only. Temperature points for temperature recorder/controllers (TRC's) are included with the TRC's.

10.4 REACTION SYSTEMS

The reactor system was given thorough mathematical modeling which was discussed in Section 4.2.

10.4.1 Computer Programs for Reaction Systems

Computer programs for the various reactor configurations are listed in the following pages.

Reaction system calculations were done on an EAI #640 digital computer with a 16,000 word memory and eight sense switches. The programs were written in standard Fortran IV computer language except for the use of logical variable SENSW. In these programs SENSW(N) is interpreted by the compiler to check the Nth sense switch for a true or false condition. To use these programs with other machines the variable SENSW(N) will have to be assigned a true or false value before it can be used in a logical expression.

Proper units for data input are specified on comment cards in the program. Concentrations used in calculating chemical reaction rates are in units of lb moles/cu ft. Molecular weight and density data were taken from "The Handbook of Chemistry and Physics"[25] with the exception of the molecular weight of coal. A value of 13 was used for the molecular weight of pyrite-free coal to maintain consistency between this report and the TRW report[1].

In the batch reactor and the plug flow reactor programs (programs A and C) the reaction rate equations in Section 4.2.1 are integrated directly with the fourth order Runge-Kutta integration subroutine. For well mixed tanks or well

mixed sections in series (Program B) the steady state equation

input + generation by reaction = output

is solved by an iterative method.

In Section 4.2 four reactor systems are summarized. Programs A-C were employed for these evaluations as follows:

Table 5	Batch Reactors	Program A
Table 6	Continuous Reactors, -with External Regeneration	Program B Program C
Table 7	Continuous Reactors in Series	Program B
Table 8	Continuous Reactors in Parallel	Program B

```
PAGE  1      C   BATCH REACTOR FOR FERRIC SULFATE LEACHING OF PYRITIC SULFUR


C    FROM COAL WITH OXYGEN RECIRCULATION -- D. FEAR
C
C
C    1=COAL SOLIDS FREE OF FES2
C    2=FES2
C    3=S
C    4=FE2(SO4)3
C    5=FESO4
C    6=H2SO4
C    7=H2O
C    8=O2
C    9=INERT GAS
C    10=H2O VAPOR
C
C    REACTIONS ARE: 4.6FE2(SO4)3+4.8H2O+FES2=10.2FESO4+4.8H2SO4+.8S
C                   FESO4+.5H2SO4+.25O2=.5FE2(SO4)3+.5H2O
C
C    W8TOT IS THE TOTAL TONS OF O2 TO BE FED
C    A VALUE OF W8TOT LESS THAN ZERO WILL BE TAKEN AS ZERO
C
C    O2 SUPPLY IS 99.5 MOLE % PURE
C
C    EXIT GAS IS 90% PURE
C
C    RATIO OF REACTOR HEIGHT TO DIAMETER IS 1.5
C
C
      LOGICAL SENSW,PFLAG,FLAG1
      REAL M,M0,MT,M0T,MW,NAME,KL,KR,MFEED,M8TOT
      DIMENSION M(11),M0(10),NAME(10,3),STF2(8),STF5(8),W(10),W0(10),MW(
     $10),DERIV(11),FEED(8),MFEED(8)
      DATA MW(1),MW(2),MW(3),MW(4),MW(5),MW(6),MW(7),MW(8),MW(9),MW(10)/
     $13.,119.96,32.06,399.86,151.90,98.08,18.02,32.,35.,18.02/
      DATA RHOS/90./
      DATA STF2(1),STF2(2),STF2(3),STF2(4),STF2(5),STF2(6),STF2(7),STF2(
     $8)/.0,1.,-.8,4.6,-10.2,-4.8,4.8,.0/
      DATA STF5(1),STF5(2),STF5(3),STF5(4),STF5(5),STF5(6),STF5(7),STF5(
     $8)/.0,.0,.0,-.5,1.0,.5,-.5,-.0118421/
      DATA NAME(1,1),NAME(1,2),NAME(1,3)/4HCOAL,4H(PUR,4HE)  /
      DATA NAME(2,1),NAME(2,2),NAME(2,3)/4HFES2,4H    ,4H    /
      DATA NAME(3,1),NAME(3,2),NAME(3,3)/4HS   ,4H    ,4H    /
      DATA NAME(4,1),NAME(4,2),NAME(4,3)/4HFE2(,4HSO4),4H3   /
      DATA NAME(5,1),NAME(5,2),NAME(5,3)/4HFESO,4H4   ,4H    /
      DATA NAME(6,1),NAME(6,2),NAME(6,3)/4HH2SO,4H4   ,4H    /
      DATA NAME(7,1),NAME(7,2),NAME(7,3)/4HH2O ,4H    ,4H    /
      DATA NAME(8,1),NAME(8,2),NAME(8,3)/4HO2  ,4H    ,4H    /
      DATA NAME(9,1),NAME(9,2),NAME(9,3)/4HINER,4HT GA,4HS   /
      DATA NAME(10,1),NAME(10,2),NAME(10,3)/4HH2O ,4HVAPO,4HR
      FLAG1=.FALSE.
      PFLAG=.FALSE.
      IF(SENSW(2))PFLAG=.TRUE.
      TA=21.
      U=.9
      DH2=-99000.
      DH5=-33480.
      IF(.NOT.SENSW(7))GO TO 4
      U=0.0
      DH2=0.0
```

```
      DH5=0.0
C   READ INPUTS IN TONS/HR AND TOTAL TONS OF OXYGEN TO BE FED IN
    4 IN=6
      READ(IN,100)(FEED(I),I=1,7),W8TOT
      O2FAC=0.0
      IF(W8TOT.GT.0.0)O2FAC=1.0
      FEED(8)=0.0
      W0(10)=0.0
      M0(10)=0.0
      IFLAG=0
C   READ TEMP IN DEG C, REACTOR TOP PRESSURE IN PSIA, AND VOLUME IN GAL
      READ(IN,100)TEMP,PRESS,VMAX
C   READ STEP SIZE, PRINTING INTERVAL, AND BATCH REACTION TIME IN HR
      READ(IN,100)DT,PINT,TMAX
C   CONVERT VOLUME FROM GAL TO CU FT
      VMAX=VMAX/7.48
C   CALC REACTOR DIAMETER
      DIA=.947*VMAX**.3333
C   CALCULATE CROSS SECTION AREA AND CIRCUMFERENCE
      AREA0=.785*DIA**2
      CIR=3.14*DIA
C   CONVERT RATES TO LB/HR AND COMPUTE LB MOLES/HR
      DO 9 I=1,10
      FEED(I)=FEED(I)*2000.
      MFEED(I)=FEED(I)/MW(I)
    9 M(I)=0.0
      M(11)=0.0
      M8TOT=W8TOT*2000./MW(8)
      WSF=0.0
      DO 901 I=1,6
  901 WSF=WSF+FEED(I)
      WCPF=1.8*(WSF*.3+FEED(7))
      TF=TEMP
      C1=MW(2)/MW(1)
   10 TIME=0.0
      TPRINT=0.0
      TEMP0=TEMP
      WRITE(6,101)
      IF(.NOT.PFLAG)GO TO 13
      WRITE(6,113)
      WRITE(6,114)
      GO TO 24
   11 KL=2.E05*EXP(-3524.67/(TEMP+273.2))
      KR=6.439E08*EXP(-6646.5/(TEMP+273.2))
      RATE1=-C1*KL/M(1)*Y*Y*M(2)**2
      IF(M(1).LE.0.0)RATE1=0.0
      RATE2=-KR*P8/VL*M(5)**2
      IF(VL.LE.0.0)RATE2=0.0
      DO 12 I=1,8
   12 DERIV(I)=MFEED(I)+RATE1*STF2(I)+RATE2*STF5(I)
      DERIV(9)=DERIV(8)/9.
      DERIV(10)=VP7/PG*1.1111*DERIV(8)
      DERIV(7)=DERIV(7)-DERIV(10)
      DERIV(11)=WCPF*TF+DH2*RATE1+DH5*RATE2-U*AREA*(TEMP-TA)
      VT0=VT
   13 CALL RUNGE(11,M,DERIV,TIME,DT,IFLAG,MFLAG)
      Y=2.*M(4)/(2.*M(4)+M(5))
      WST=0.0
      DO 14 I=1,3
   14 WST=WST+M(I)*MW(I)
```

```
      WLT=0.0
      DO 15 I=4,6
   15 WLT=WLT+M(I)*MW(I)
      W7=M(7)*MW(7)
      WCPT=1.8*((WST+WLT)*.3+W7)
C    CALC TEMPERATURE
      TEMP=M(11)/WCPT
      IF(WCPT.LE.0.0)TEMP=TEMP0
      WLT=WLT+W7
      WFLS=1.-M(7)*MW(7)/WLT
      IF(WLT.LE.0.0)WFLS=0.0
C    CALC LIQUID DENSITY IN LB/CU FT
      RHOL=62.43*(1.001+.72434*WFLS+.94305*WFLS**2+.10874*WFLS**3)
C
      VP70=EXP(13.6953-3215.4/(TEMP+273.2)-333070./(TEMP+273.2)**2)
      VP7=VP70*(.99973-.0863*WFLS-.16059*WFLS**2)
C
C    CALC LIQUID VOLUME AND TOTAL VOLUME IN CU FT
      VL=WLT/RHOL
      VT=VL+WST/RHOS
C
C    CALC AVG DENSITY OF REACTOR MIXTURE IN LB/CU FT
      RHOAVG=(WLT+WST)/VT
C
C    CALC HEIGHT OF LIQUID IN REACTOR
      H=VT/AREA0
C    CALC AREA FOR HEAT TRANSFER
      AREA=AREA0+CIR*H
C
C    CALC PRESSURE OF LIQUID HEAD IN PSI
      DPL=H*RHOAVG/144.
C
      PG=PRESS+DPL/2.-VP7
      IF(PG.GE.0.0)GO TO 18
      PG=0.0
      PRESS=VP7-DPL/2.
   18 P8=PG*.9*O2FAC
      IF(MFLAG.LT.2)GO TO 11
      IF(M(8)*22.1111.GE.M8TOT)O2FAC=0.0
      IF(FLAG1)GO TO 22
      IF((1.5*VT-.5*VT0).LT.VMAX)GO TO 22
      DO 20 I=1,7
      M0(I)=TIME*MFEED(I)
      W0(I)=TIME*FEED(I)/2000.
   20 MFEED(I)=0.0
      WCPF=0.0
      GO TO 25
   22 IF(TIME.GE.(TMAX-.1*DT))GO TO 25
      IF(TIME.LT.TPRINT)GO TO 13
      IF(.NOT.PFLAG)GO TO 13
   24 WRITE(6,115)TIME,M(2),M(4),M(5),M(6),M(8),M(10)
      TPRINT=TPRINT+PINT
      GO TO 13
   25 M0(8)=22.1111*M(8)
      M0(9)=.005025*M0(8)
      W0(8)=M0(8)*MW(8)/2000.
      W0(9)=M0(9)*MW(9)/2000.
      CONV=(1.-M(2)/M0(2))*100.
      IF(M0(2).LE.0.0)CONV=0.0
$     IF(PFLAG)WRITE(6,101)
```

```
      IF(FLAG1)GO TO 26
      WRITE(6,116)
      GO TO 27
   26 WRITE(6,117)
   27 WRITE(6,102)TEMPØ,TEMP
C   CONVERT VT FROM CU FT TO GAL
      VT=VT*7.48
      WRITE(6,112)VT,TIME
      WRITE(6,103)PRESS,CONV
      WRITE(6,104)
      WT=Ø.Ø
      WØT=Ø.Ø
      DO 3Ø I=1,1Ø
      W(I)=M(I)*MW(I)/2ØØØ.
      WT=WT+W(I)
      WØT=WØT+WØ(I)
   3Ø WRITE(6,1Ø5)(NAME(I,K),K=1,3),WØ(I),W(I)
      WRITE(6,1Ø9)
      WRITE(6,11Ø)WØT,WT
      WRITE(6,1Ø6)
      WRITE(6,1Ø7)
      MØT=Ø.Ø
      MT=Ø.Ø
      DO 35 I=1,1Ø
      MØT=MØT+MØ(I)
      MT=MT+M(I)
   35 WRITE(6,1Ø5)(NAME(I,K),K=1,3),MØ(I),M(I)
      WRITE(6,1Ø9)
      WRITE(6,11Ø)MØT,MT
      IF(FLAG1)GO TO 4Ø
      FLAG1=.TRUE.
      GO TO 1Ø
   4Ø CALL EXIT
  1ØØ FORMAT(11F1Ø.Ø)
  1Ø1 FORMAT(1H1,3X,7ØHFERRIC SULFATE LEACHING OF PYRITIC SULFUR FROM CO
     $AL IN A BATCH REACTOR,///)
  1Ø2 FORMAT(/,5X,28HINITIAL TEMPERATURE, DEG C =,F6.1,7X,26HFINAL TEMPE
     $RATURE, DEG C =,F6.1)
  1Ø3 FORMAT(/,5X,16HPRESSURE, PSIA =,F6.1,19X,22H% CONV OF FES2 INPUT =
     $,F6.2)
  1Ø4 FORMAT(//,1Ø X,14HQUANTITY, TONS,9X,5HINPUT,8X,6HOUTPUT,/)
  1Ø5 FORMAT(1Ø X,3A4,6X,F1Ø.2,4X,F1Ø.2)
  1Ø6 FORMAT(//,3X,76(1H*),///)
  1Ø7 FORMAT(1Ø X,16HQUANTITY, LB MOL,7X,5HINPUT,8X,6HOUTPUT,/)
  1Ø8 FORMAT(8E1Ø.4)
  1Ø9 FORMAT(3Ø X,8(1H-),6X,8(1H-))
  11Ø FORMAT(/,1Ø X,5HTOTAL,14X,F9.2,5X,F9.2)
  111 FORMAT(I1Ø)
  112 FORMAT(/,5X,21HREACTOR VOLUME, GAL =,F9.Ø,11X,2ØHRESIDENCE TIME, H
     $R =,F6.2)
  113 FORMAT(5X,5HTIME,,4X,4HFES2,4X,9HFE2(SO4)3,4X,5HFESO4,4X,5HH2SO4,4
     $X,2HO2,4X,9HH2O VAPOR)
  114 FORMAT(7X,2HHR,1X,21(1H-),16HQUANTITY, LB MOL,21(1H-),/)
  115 FORMAT(1X,F9.1,F9.2,F1Ø.2,F11.2,F9.2,F8.2,F9.2)
  116 FORMAT(33X,1ØHFILL CYCLE)
  117 FORMAT(33X,11HBATCH CYCLE)
      END
```

$

PAGE 1 C RUNGE-KUTTA INTEGRATION SUBROUTINE

```
      SUBROUTINE RUNGE(NUMBER,RESULT,DERIV,X,H,IFLAG,MFLAG)
C     NUMBER = NUMBER OF EQUATIONS.,
C     RESULT = INTEGRAND ARRAY WHERE RESULTS ARE STORED
C     DERIV = DERIVATIVE ARRAY
C     X = LENGTH OR TIME POSITION---THE INDEPENDANT VARIABLE
C     H = INCREMENT SIZE
C     IFLAG = FLAG TO THE SUBROUTINE FOR MULTI-PASSES
C     IFLAG MUST BE PRESET TO ZERO BEFORE THE FIRST ENTRY
C          IF MFLAG = 1 THEN CALCULATE DERIVATIVES
C          IF MFLAG = 2 THEN INCREMENT IS FINISHED
C     DERIVATIVES ARE CALCULATED FOUR TIMES FOR EACH TIME-STEP
      DIMENSION RESULT(12),DERIV(12),SAVE(12),PHI(12)
      IFLAG = IFLAG + 1
C   PASS 1
      GO TO (100,200,300,400,500), IFLAG
100   MFLAG = 1
      GO TO 600
200   DO 201 J = 1, NUMBER
      SAVE(J)=RESULT(J)
      PHI(J) = DERIV(J)
  201 RESULT(J)=SAVE(J)+0.5*H*DERIV(J)
      X = X+ .5*H
      GO TO 600
C   PASS 3
300   DO 301 J = 1, NUMBER
      PHI(J) = PHI(J) + 2.0 * DERIV(J)
  301 RESULT(J)=SAVE(J)+0.5*H*DERIV(J)
      GO TO 600
C   PASS 4
400   DO 401 J = 1, NUMBER
      PHI(J) = PHI(J) + 2.0 * DERIV(J)
  401 RESULT(J)=SAVE(J)+H*DERIV(J)
      X = X + .5*H
      GO TO 600
500   DO 501 J = 1, NUMBER
  501 RESULT(J)=SAVE(J)+(PHI(J)+DERIV(J))*H/6.0
      MFLAG = 2
      IFLAG = 0
600   RETURN
      END
```

```
C     RECIRCULATING FLOW REACTOR CALCULATIONS -- D. FEAR

C                                                          MI* *****-
C                                                            * *    *
C                                                            * *    *
C                                                           *****   *
C                                                           *   *   *
C    JMAX = NO. OF REACTORS IN SERIES                       *   *   *
C                                                           *   *   *R
C    NMAX = NO. OF CSTR'S IN SERIES PER REACTOR             *   *   *
C                                                           *   *   *
C    RR = RECIRCULATION RATIO                               *****   *
C                                                             *     *
C    NPR = NO. OF PARALLEL REACTOR TRAINS                     *     *
C                                                             ***********M
C                                                               1*R    1
C
C
      LOGICAL SENSW
      LOGICAL FLAG1
      INTEGER DFAC
      REAL M0,M,MW,MT,MI,MIT,NAME,MI02
      DIMENSION M0(10),M(10),MW(10),MI(10),NAME(10,3),W(10),WI(10)
      DIMENSION OLDM(7),W8(10),W9(10)
      COMMON /COMM1/QLOSS
      DATA UP,DOWN/4HUP  ,4HDOWN/
      DATA RHOS/90./
      DATA MW(1),MW(2),MW(3),MW(4),MW(5),MW(6),MW(7),MW(8),MW(9),MW(10)/
     $13.,119.96,32.06,399.86,151.90,98.08,18.02,32.,35.,18.02/
      DATA NAME(1,1),NAME(1,2),NAME(1,3)/4HCOAL,4H(PUR,4HE)  /
      DATA NAME(2,1),NAME(2,2),NAME(2,3)/4HFES2,4H    ,4H    /
      DATA NAME(3,1),NAME(3,2),NAME(3,3)/4HS   ,4H    ,4H    /
      DATA NAME(4,1),NAME(4,2),NAME(4,3)/4HFE2(,4HSO4),4H3   /
      DATA NAME(5,1),NAME(5,2),NAME(5,3)/4HFESO,4H4   ,4H    /
      DATA NAME(6,1),NAME(6,2),NAME(6,3)/4HH2SO,4H4   ,4H    /
      DATA NAME(7,1),NAME(7,2),NAME(7,3)/4HH2O ,4H    ,4H    /
      DATA NAME(8,1),NAME(8,2),NAME(8,3)/4HO2  ,4H    ,4H    /
      DATA NAME(9,1),NAME(9,2),NAME(9,3)/4HINER,4HT GA,4HS   /
      DATA NAME(10,1),NAME(10,2),NAME(10,3)/4HH2O ,4HVAPO,4HR   /
C
C    READ INPUTS IN TONS/HR
      IN=6
      READ(IN,100)(W(I),I=1,7)
C    READ TEMP IN DEG C, PRESSURE IN PSIA, AND VOLUME IN GAL
      READ(IN,100)TM,PM,VM,HODM
      READ(IN,100)TEMP,PRESS,VOL,HOD,RR
      READ(IN,120)JMAX,NMAX,DFAC,NPR
C    READ GAS RATES TO EACH REACTOR IN TONS/HR
      READ(IN,100)(W8(J),J=1,JMAX)
      READ(IN,100)(W9(J),J=1,JMAX)
C
C    CONVERT RATES TO LB/HR AND LB MOLES/HR
      W(8)=0.0
      W(9)=0.0
      W(10)=0.0
      DO 10 I=1,10
      WI(I)=W(I)*2000.
      MI(I)=WI(I)/MW(I)
      M(I)=MI(I)
   10 M0(I)=MI(I)
```

```
      MI02=MI(2)
      T0=TM
C   CALC REACTION FROM MIXING TANK
      J=0
      IF(SENSW(4))GO TO 11
      CALL CSTR(1,TM,PM,VM,.0,1,M0,M,MW,RESTIM,HODM)
      GO TO 25
   11 DO 999 I=1,7
      M(I)=M(I)/FLOAT(NPR)
      M0(I)=M0(I)/FLOAT(NPR)
  999 MI(I)=M0(I)
   12 J=J+1
      T0=TEMP
      IF(J.GT.JMAX)GO TO 40
      MI(8)=W8(J)*2000./MW(8)/FLOAT(NPR)
      M0(8)=MI(8)
      M(8)=M0(8)
      MI(9)=W9(J)*2000./MW(9)/FLOAT(NPR)
      M0(9)=MI(9)
      M(9)=M0(9)
      O2FAC=1.0
      IF(M(8).LE.0.0)O2FAC=0.0
      DO 14 I=1,7
      MI(I)=M(I)
      OLDM(I)=0.0
   14 M(I)=(1.+RR)*M(I)
   17 FLAG1=.FALSE.
      DO 18 I=1,7
      M0(I)=MI(I)+M(I)*RR/(1.+RR)
      IF(ABS(OLDM(I)/M0(I)-1.).GT..0001)FLAG1=.TRUE.
   18 OLDM(I)=M0(I)
      IF(SENSW(2))WRITE(6,108)(M0(I),I=1,8),TEMP
      IF(.NOT.FLAG1)GO TO 20
      CALL CSTR(NMAX,TEMP,PRESS,VOL,O2FAC,DFAC,M0,M,MW,RESTIM,HOD)
      GO TO 17
   20 CONTINUE
      DO 21 I=1,7
   21 M(I)=M(I)/(1.+RR)
   25 CONTINUE
      RV=VOL
      T=TEMP
      P=PRESS
      IF(J.GT.0)GO TO 27
      RV=VM
      T=TM
      P=PM
   27 DIR=UP
      IF(DFAC.LT.0)DIR=DOWN
      DM2=MI(2)-M(2)
      PF=1.0
      IF(J.GT.0)PF=FLOAT(NPR)
      CONV0=100.*DM2/MI02*PF
      CONV=100.*DM2/MI(2)
      WRITE(6,101)J
      IF(J.EQ.0)GO TO 28
      WRITE(6,113)NMAX
      WRITE(6,114)RR,DIR
   28 WRITE(6,102)T0,T
      WRITE(6,111)P,QLOSS
      WRITE(6,112)RV,RESTIM
```

```
      WRITE(6,103)CONV,CONV0
      IF(NPR.GT.1.AND.J.GT.0)WRITE(6,117)NPR
      WRITE(6,104)
      WT=0.0
      WIT=0.0
      DO 30 I=1,10
      WI(I)=MI(I)*MW(I)/2000.
      W(I)=M(I)*MW(I)/2000.
      WIT=WIT+WI(I)
      WT=WT+W(I)
   30 WRITE(6,115)(NAME(I,K),K=1,3),WI(I),W(I)
      WRITE(6,109)
      WRITE(6,116)WIT,WT
      WRITE(6,106)
      WRITE(6,107)
      MIT=0.0
      MT=0.0
      DO 35 I=1,10
      MIT=MIT+MI(I)
      MT=MT+M(I)
   35 WRITE(6,105)(NAME(I,K),K=1,3),MI(I),M(I)
      WRITE(6,109)
      WRITE(6,110)MIT,MT
      IF(J.EQ.0)GO TO 11
      GO TO 12
   40 CALL EXIT
  100 FORMAT(10F10.0)
  101 FORMAT(1H1, 1X,78HFERRIC SULFATE LEACHING OF PYRITIC SULFUR FROM C
     $OAL IN A RECIRCULATING REACTOR,///,31X,11HREACTOR NO.,I4)
  102 FORMAT(/,5X,23HTEMPERATURE IN, DEG C =,F6.1,12X,24HTEMPERATURE OUT
     $, DEG C =,F6.1)
  103 FORMAT(/,5X,22H% CONV OF FES2 INPUT =,F6.2,13X,24H% OF INITIAL FES
     $2 CONV =,F6.2,//)
  104 FORMAT(//,10X,14HFLOWRATE, T/HR,9X,5HINPUT,9X,6HOUTPUT,/)
  105 FORMAT(10X,3A4,6X,F11.3,4X,F11.3)
  106 FORMAT(//,3X,76(1H*),///)
  107 FORMAT(10X,19HFLOWRATE, LB MOL/HR,4X,5HINPUT,9X,6HOUTPUT,/)
  108 FORMAT(10F10.2)
  109 FORMAT(30X,9(1H-),6X,9(1H-))
  110 FORMAT(/,10X,5HTOTAL,14X,F10.3,5X,F10.3)
  111 FORMAT(/,5X,16HPRESSURE, PSIA =,F6.1,19X,19HHEAT LOSS, BTU/HR =,F8
     $.0)
  112 FORMAT(/,5X,21HREACTOR VOLUME, GAL =,F9.0,11X,20HRESIDENCE TIME, H
     $R =,F6.2)
  113 FORMAT(//,21X,15HEACH REACTOR IS,I4,2X,15HCSTRS IN SERIES)
  114 FORMAT(/,5X,21HRECIRCULATION RATIO =,F6.2,14X,20HDIRECTION OF FLOW
     $ IS,1X,A4)
  115 FORMAT(10X,3A4,6X,F11.5,4X,F11.5)
  116 FORMAT(/,10X,5HTOTAL,14X,F10.5,5X,F10.5)
  117 FORMAT(25X,6HONE OF,I3,18H PARALLEL REACTORS)
  120 FORMAT(4I10)
      END
```

PAGE 1

```
      SUBROUTINE CSTR(NMAX,TEMP,PRESS,VOL,O2FAC,DFAC,M0,M,MW,RESTIM,HOD)
C   CSTR CALCULATIONS FOR FERRIC SULFATE LEACHING OF PYRITIC SULFUR
C   FROM COAL --- D. FEAR
C
C   1=COAL SOLIDS FREE OF FES2
C   2=FES2
C   3=S
C   4=FE2(SO4)3
C   5=FESO4
C   6=H2SO4
C   7=H2O
C   8=O2
C   9=INERT GAS
C   10=H2O VAPOR
C
C   REACTIONS ARE: 4.6FE2(SO4)3+4.8H2O+FES2=10.2FESO4+4.8H2SO4+.8S
C                  FESO4+.5H2SO4+.25O2=.5FE2(SO4)3+.5H2O
C
C
C   O2FAC=1.0 IF OXYGEN IS USED, OTHERWISE O2FAC=0.0
C
C   RATIO OF REACTOR HEIGHT TO REACTOR DIAMETER IS HOD
C
C   CSTRS ARE A VERTICAL HYDRAULIC SERIES
C   DFAC=+1  FOR UPFLOW  AND -1 FOR DOWNFLOW
C
C
      LOGICAL SENSW
      LOGICAL FLAG1,TFLAG,PASS1
      INTEGER DFAC
      DOUBLE PRECISION ADBL,BDBL,CDBL,SIGN
      REAL M0,M,MW,KL,KR
      DIMENSION M0(10),M(10),STF2(8),STF5(8),MW(10)
      COMMON /COMM1/QLOSS
      DATA STF2(1),STF2(2),STF2(3),STF2(4),STF2(5),STF2(6),STF2(7),STF2(
     $8)/.0,1.,-.8,4.6,-10.2,-4.8,4.8,.0/
      DATA STF5(1),STF5(2),STF5(3),STF5(4),STF5(5),STF5(6),STF5(7),STF5(
     $8)/.0,.0,.0,-.5,1.0,.5,-.5,.25/
      DATA RHOS/90./
C
      TA=21.
      TG=TA
      U=2.
      DH2=99000.
      DH5=33480.
      TFLAG=.TRUE.
      PASS1=.TRUE.
      IF(.NOT.SENSW(7))GO TO 5
      TFLAG=.FALSE.
    5 M0(10)=0.0
      DQ=0.0
      QLOSS=0.0
      WCPG0=.403*M0(8)*MW(8)+.225*M0(9)*MW(9)
C   CONVERT VOLUME FROM GAL TO CU FT
      RVL=VOL/7.48
C   CALC REACTOR HEIGHT AND DIAMETER IN FT
      DIA=(RVL/.785/HOD)**.3333
      H=HOD*DIA
```

```
      C1=MW(2)/MW(1)/M(1)
      RNMAX=FLOAT(NMAX)
      RESTIM=0.0
C   CALC VOLUME AND HEAT TRANSFER AREA FOR EACH STAGE
      AREA=3.14*DIA*H/RNMAX
      RVL=RVL/RNMAX
      N=NMAX
      IF(DFAC.LE.0)N=1
      GO TO 10
    7 DO 8 I=1,10
    8 M0(I)=M(I)
    9 TG=TEMP
   10 T0=TEMP
      OLDDM2=0.0
      OLDM2=M(2)
      OLDM4=M(4)
      OLDM5=M(5)
   12 FLAG1=.FALSE.
      NC=1
      KL=2.E05*EXP(-3524.67/(TEMP+273.2))
      KR=6.439E08*EXP(-6646.5/(TEMP+273.2))
      VP70=EXP(13.6953-3215.4/(TEMP+273.2)-333070./(TEMP+273.2)**2)
      Y=2.*M(4)/(2.*M(4)+M(5))
      WST=0.0
      DO 14 I=1,3
   14 WST=WST+M(I)*MW(I)
      WLT=0.0
      DO 15 I=4,6
   15 WLT=WLT+M(I)*MW(I)
      W7=M(7)*MW(7)
      WCPT=1.8*((WST+WLT)*.3+W7)
      IF(.NOT.PASS1)GO TO 16
      WCPT0=WCPT
      PASS1=.FALSE.
   16 WLT=WLT+W7
      WFLS=1.-M(7)*MW(7)/WLT
      RHOL=62.43*(1.001+.72434*WFLS+.94305*WFLS**2+.10874*WFLS**3)
      VP7=VP70*(.99973-.0863*WFLS-.16059*WFLS**2)
C   CALC LIQUID FLOW RATE IN CU FT/HR
      FL=WLT/RHOL
      TAU=(FL+WST/RHOS)/RVL
C   CALC AVG DENSITY OF REACTOR MIXTURE IN LB/CU FT
      RHOAVG=(WLT+WST)/TAU/RVL
C   CALC PRESSURE OF LIQUID HEAD IN PSI PER STAGE
      DPL=H*RHOAVG/144./RNMAX
      PTAVG=PRESS+DPL*(FLOAT(N)-.5)
      CONST=KR*(PTAVG-VP7)/FL/TAU
   17 B=M(9)-M0(8)+STF5(8)*CONST*OLDM5**2
      C=4.*M0(8)*M(9)/(B**2)
      IF(C.GE.,00005)GO TO 18
      M(8)=M0(8)*M(9)/B
      GO TO 19
   18 SIGN=1.D00
      IF(B.LT.0.0)SIGN=-1.D00
      BDBL=B
      CDBL=C
      M(8)=BDBL*(SIGN*DSQRT(1.D00+CDBL)-1.D00)/2.D00
   19 A=CONST*STF5(5)*M(8)/(M(8)+M(9))
      IF(M(8).LE.0.0)A=0.0
      C5=M0(5)+STF2(5)*OLDDM2
```

```
      C=4.*A*C5
      IF(C.GE..00005)GO TO 20
      M(5)=C5
      GO TO 21
   20 ADBL=A
      CDBL=C
      M(5)=(DSQRT(1.D00+C)-1.D00)/ADBL/2.D00
   21 CONTINUE
      IF(SENSW(1))WRITE(6,109)M0(5),OLDM5,M(5),C5,DM2,A,C,M(8)
      CALL CONV(OLDM5,M(5),1,NC,.00002)
      IF(NC.EQ.1)GO TO 22
      FLAG1=.TRUE.
      GO TO 17
   22 DM5=-A/STF5(5)*M(5)**2
      CONST=C1*KL/TAU
      A=M0(4)+DM5*STF5(4)
   24 B=A+OLDDM2*STF2(4)
      Y=2.*B/(2.*B+M(5))
      SIGN=1.
      IF(B.LT.0.0)SIGN=-1.
      DM2=-SIGN*CONST*Y**2*(M0(2)+OLDDM2)**2
      IF(SENSW(1))WRITE(6,109)OLDDM2,DM2,M0(2),M0(4)
      CALL CONV(OLDDM2,DM2,2,NC,.00002)
      IF(NC.EQ.1)GO TO 28
      FLAG1=.TRUE.
      GO TO 24
   28 IF(.NOT.TFLAG)GO TO 30
      WCPG=.403*M(8)*MW(8)+.225*M(9)*MW(9)
      TEMP=(WCPT0*T0+WCPG0*TG-DH2*DM2-DH5*DM5+U*AREA*TA)/(WCPT+WCPG+U*AR
     $EA)
      DQ=U*AREA*(TEMP-TA)
   30 DO 31 I=2,7
   31 M(I)=M0(I)+DM2*STF2(I)+DM5*STF5(I)
      IF(FLAG1)GO TO 12
      QLOSS=QLOSS+DQ
      IF(SENSW(3))WRITE(6,109)DM5,DPL,DQ,QLOSS
      IF(SENSW(3))WRITE(6,108)(M(I),I=1,8),TEMP,TAU,PTAVG
      N=N-DFAC
      RESTIM=RESTIM+1./TAU
      IF(N.GT.0.AND.N.LE.NMAX)GO TO 7
      M(10)=VP7/(PTAVG-DPL/2.-VP7)*(M(8)+M(9))
      M(7)=M(7)-M(10)
      RETURN
  108 FORMAT(12F10.2)
  109 FORMAT(8E12.5)
      END
```

```
      SUBROUTINE CONV(X,Y,NR,NC,TOL)
C   WEGSTEIN METHOD FOR ALGEBRAIC CONVERGENCE
C   X = TRIAL VALUE
C   Y = CALCULATED VALUE
C   NR = ROUTINE CALL NUMBER
C   NC = CONVERGE INDEX (NC=1, CONVERGE)
      DIMENSION XA(10),YA(10)
      IF(ABS((X-Y)/(X+Y)).LT.TOL)GO TO 6
      IF(NC.LE.1)GO TO 5
      XT=(XA(NR)*Y-YA(NR)*X)/(XA(NR)-X+Y-YA(NR))
      XA(NR)=X
      YA(NR)=Y
      X=XT
      RETURN
    5 XA(NR)=X
      YA(NR)=Y
      X=Y
      NC=2
      RETURN
    6 X=Y
      NC=1
      RETURN
      END
```

PROGRAM C

PLUG FLOW REACTOR, USED FOR EXTERNAL REGENERATION CALCULATIONS

```
PAGE  1      C   PLUG FLOW REACTOR FOR FERRIC SULFATE LEACHING OF PYRITIC SULFUR


C    FROM COAL -- D. FEAR
C
C
C    1=COAL SOLIDS FREE OF FES2
C    2=FES2
C    3=S
C    4=FE2(SO4)3
C    5=FESO4
C    6=H2SO4
C    7=H2O
C    8=O2
C    9=INERT GAS
C    10=H2O VAPOR
C
C    REACTIONS ARE: 4.6FE2(SO4)3+4.8H2O+FES2=10.2FESO4+4.8H2SO4+.8S
C                   FESO4+.5H2SO4+.25O2=.5FE2(SO4)3+.5H2O
C
C    O2FAC=1.0 IF OXYGEN IS USED, OTHERWISE O2FAC=0.0
C
C    VFAC=1.0 IF REACTOR IS VERTICAL, OTHERWISE VFAC=0.0
C
C
C
      LOGICAL SENSW,PFLAG
      REAL M,M0,MT,MIT,MW,NAME,KL,KR,MI
      DIMENSION M(10),M0(10),NAME(10,3),STF2(8),STF5(8),W(10),W0(10),MW(
     $10),DEL(2),DERIV(2),WI(10),MI(10)
      DATA MW(1),MW(2),MW(3),MW(4),MW(5),MW(6),MW(7),MW(8),MW(9),MW(10)/
     $13.,119.96,32.06,399.86,151.90,98.08,18.02,32.,35.,18.02/
      DATA RHOS/90./
      DATA STF2(1),STF2(2),STF2(3),STF2(4),STF2(5),STF2(6),STF2(7),STF2(
     $8)/.0,1.,-.8,4.6,-10.2,-4.8,4.8,.0/
      DATA STF5(1),STF5(2),STF5(3),STF5(4),STF5(5),STF5(6),STF5(7),STF5(
     $8)/.0,.0,.0,-.5,1.0,.5,-.5,.25/
      DATA NAME(1,1),NAME(1,2),NAME(1,3)/4HCOAL,4H(PUR,4HE)  /
      DATA NAME(2,1),NAME(2,2),NAME(2,3)/4HFES2,4H    ,4H    /
      DATA NAME(3,1),NAME(3,2),NAME(3,3)/4HS   ,4H    ,4H    /
      DATA NAME(4,1),NAME(4,2),NAME(4,3)/4HFE2(,4HSO4),4H3   /
      DATA NAME(5,1),NAME(5,2),NAME(5,3)/4HFESO,4H4   ,4H    /
      DATA NAME(6,1),NAME(6,2),NAME(6,3)/4HH2SO,4H4   ,4H    /
      DATA NAME(7,1),NAME(7,2),NAME(7,3)/4HH2O ,4H    ,4H    /
      DATA NAME(8,1),NAME(8,2),NAME(8,3)/4HO2  ,4H    ,4H    /
      DATA NAME(9,1),NAME(9,2),NAME(9,3)/4HINER,4HT GA,4HS   /
      DATA NAME(10,1),NAME(10,2),NAME(10,3)/4HH2O ,4HVAPO,4HR   /
      PFLAG=.FALSE.
      IF(SENSW(2))PFLAG=.TRUE.
C    READ INPUTS IN TONS/HR
      IN=6
      READ(IN,100)(W(I),I=1,9),O2FAC,VFAC
      W(10)=0.0
      IFLAG=0
C    READ TEMP IN DEG C AND TOP REACTOR PRESSURE IN PSIA
      READ(IN,100)TEMP,PRESS
C    READ REACTOR DIAMETER AND HEIGHT IN FEET
      READ(IN,100)DIA,ZMAX
C    READ INTEGRATION STEP SIZE AND PRINTING INTERVAL IN FEET
      READ(IN,100)DZ,PINT
$     Z=0.0
```

```
      ZPRINT=0.0
      AREA=.785*DIA**2
      KL=2.E05*EXP(-3524.67/(TEMP+273.2))
      KR=6.439E08*EXP(-6646.5/(TEMP+273.2))
      VP70=EXP(13.6953-3215.4/(TEMP+273.2)-333070./(TEMP+273.2)**2)
C   CONVERT RATES TO LB/HR AND COMPUTE LB MOLES/HR
      DO 10 I=1,10
      WI(I)=W(I)
      W(I)=W(I)*2000.
      M(I)=W(I)/MW(I)
   10 MI(I)=M(I)
      C1=KL*MW(2)/W(1)*AREA
      C2=KR*AREA
      WRITE(6,101)
      IF(.NOT.PFLAG)GO TO 11
      WRITE(6,113)
      WRITE(6,114)
      GO TO 24
   11 DO 12 I=1,10
      W0(I)=W(I)
   12 M0(I)=M(I)
      DEL(1)=0.0
      DEL(2)=0.0
   13 Y=2.*M(4)/(2.*M(4)+M(5))
      WST=0.0
      DO 14 I=1,3
   14 WST=WST+W(I)
      WLT=0.0
      DO 15 I=4,7
   15 WLT=WLT+W(I)
      WFLS=1.-W(7)/WLT
C   CALC LIQUID DENSITY IN LB/CU FT
      RHOL=62.43*(1.001+.72434*WFLS+.94305*WFLS**2+.10874*WFLS**3)
      VP7=VP70*(.99973-.0863*WFLS-.16059*WFLS**2)
C   CALC LIQUID FLOW RATE IN CU FT/HR
      FL=WLT/RHOL
C   CALC AVG DENSITY OF REACTOR MIXTURE IN LB/CU FT
      FT=FL+WST/RHOS
      RHOAVG=(WLT+WST)/FT
C   CALC PRESSURE OF LIQUID HEAD IN PSI
      DPL=(ZMAX-Z)*RHOAVG/144.*VFAC
      P8=(PRESS+DPL-VP7)*M(8)/(M(8)+M(9))*02FAC
      DERIV(1)=-C1*Y*Y/FT*M(2)**2
      DERIV(2)=-C2*P8/FT/FL*M(5)**2
   20 CALL RUNGE(2,DEL,DERIV,Z,DZ,IFLAG,MFLAG)
      IF(IFLAG.EQ.1)GO TO 20
      DO 22 I=2,8
      M(I)=M0(I)+STF2(I)*DEL(1)+STF5(I)*DEL(2)
   22 W(I)=M(I)*MW(I)
      IF(SENSW(3))WRITE(6,108)DERIV(1),DERIV(2),DEL(1),DEL(2),P8,FT,FL
      IF(MFLAG.LT.2)GO TO 13
      M(10)=VP7/(PRESS+DPL-VP7)*(M(8)+M(9))
      W(10)=M(10)*MW(10)
      M(7)=M(7)+M0(10)-M(10)
      W(7)=M(7)*MW(7)
      IF(Z.GE.ZMAX)GO TO 25
      IF(Z.LT.ZPRINT)GO TO 11
      IF(.NOT.PFLAG)GO TO 11
   24 WRITE(6,115)Z,M(2),M(4),M(5),M(6),M(8),M(10)
      ZPRINT=ZPRINT+PINT
```

```
      GO TO 11
   25 CONV=(1.-W(2)/WI(2))*100.
      IF(WI(2).LE.0.0)CONV=0.0
      IF(PFLAG)WRITE(6,101)
      WRITE(6,102)TEMP,PRESS
      WRITE(6,112)DIA,ZMAX
      WRITE(6,103)CONV
      WRITE(6,104)
      WT=0.0
      WIT=0.0
      DO 30 I=1,10
      W(I)=W(I)/2000.
      WT=WT+W(I)
      WIT=WIT+WI(I)
   30 WRITE(6,105)(NAME(I,K),K=1,3),WI(I),W(I)
      WRITE(6,109)
      WRITE(6,110)WIT,WT
      WRITE(6,106)
      WRITE(6,107)
      MIT=0.0
      MT=0.0
      DO 35 I=1,10
      MIT=MIT+MI(I)
      MT=MT+M(I)
   35 WRITE(6,105)(NAME(I,K),K=1,3),MI(I),M(I)
      WRITE(6,109)
      WRITE(6,110)MIT,MT
      CALL EXIT
  100 FORMAT(11F10.0)
  101 FORMAT(1H1,3X,74HFERRIC SULFATE LEACHING OF PYRITIC SULFUR FROM CO
     $AL IN A PLUG FLOW REACTOR,///)
  102 FORMAT(/,5X,20HTEMPERATURE, DEG C =,F6.1,15X,16HPRESSURE, PSIA =,F
     $6.1)
  103 FORMAT(/,5X,22H% CONV OF FES2 INPUT =,F6.2)
  104 FORMAT(//,10X,14HFLOWRATE, T/HR,9X,5HINPUT,8X,6HOUTPUT,/)
  105 FORMAT(10X,3A4,6X,F10.2,4X,F10.2)
  106 FORMAT(//,3X,76(1H*),///)
  107 FORMAT(10X,19HFLOWRATE, LB MOL/HR,4X,5HINPUT,8X,6HOUTPUT,/)
  108 FORMAT(8E10.4)
  109 FORMAT(30X,8(1H-),6X,8(1H-))
  110 FORMAT(/,10X,5HTOTAL,14X,F9.2,5X,F9.2)
  111 FORMAT(I10)
  112 FORMAT(/,5X,22HREACTOR DIAMETER, FT =,F6.2,13X,20HREACTOR LENGTH,
     $FT =,F6.1)
  113 FORMAT(5X,5HDIST.,4X,4HFES2,4X,9HFE2(SO4)3,4X,5HFESO4,4X,5HH2SO4,4
     $X,2HO2,4X,9HH2O VAPOR)
  114 FORMAT(7X,2HFT,1X,19(1H-),19HFLOWRATE, LB MOL/HR,20(1H-),/)
  115 FORMAT(1X,F9.1,F9.2,F10.2,F11.2,F9.2,F8.2,F9.2)
      END
```

PAGE 1 C RUNGE-KUTTA INTEGRATION SUBROUTINE

```
      SUBROUTINE RUNGE(NUMBER,RESULT,DERIV,X,H,IFLAG,MFLAG)
C     NUMBER = NUMBER OF EQUATIONS..
C     RESULT = INTEGRAND ARRAY WHERE RESULTS ARE STORED
C     DERIV = DERIVATIVE ARRAY
C     X = LENGTH OR TIME POSITION---THE INDEPENDANT VARIABLE
C     H = INCREMENT SIZE
C     IFLAG = FLAG TO THE SUBROUTINE FOR MULTI-PASSES
C     IFLAG MUST BE PRESET TO ZERO BEFORE THE FIRST ENTRY
C          IF MFLAG = 1 THEN CALCULATE DERIVATIVES
C          IF MFLAG = 2 THEN INCREMENT IS FINISHED
C     DERIVATIVES ARE CALCULATED FOUR TIMES FOR EACH TIME-STEP
      DIMENSION RESULT(30),DERIV(30),SAVE(30),PHI(30)
      IFLAG = IFLAG + 1
C   PASS 1
      GO TO (100,200,300,400,500), IFLAG
100   MFLAG = 1
      GO TO 600
200   DO 201 J = 1, NUMBER
      SAVE(J)=RESULT(J)
      PHI(J) = DERIV(J)
  201 RESULT(J)=SAVE(J)+0.5*H*DERIV(J)
      X = X+ .5*H
      GO TO 600
C   PASS 3
300   DO 301 J = 1, NUMBER
      PHI(J) = PHI(J) + 2.0 * DERIV(J)
  301 RESULT(J)=SAVE(J)+0.5*H*DERIV(J)
      GO TO 600
C   PASS 4
400   DO 401 J = 1, NUMBER
      PHI(J) = PHI(J) + 2.0 * DERIV(J)
  401 RESULT(J)=SAVE(J)+H*DERIV(J)
      X = X + .5*H
      GO TO 600
500   DO 501 J = 1, NUMBER
  501 RESULT(J)=SAVE(J)+(PHI(J)+DERIV(J))*H/6.0
      MFLAG = 2
      IFLAG = 0
600   RETURN
      END
```

10.4.2 Computer Printout for Reaction Systems

The data used for Summary Tables 5-8 in Section 4.2.4 are presented here in full. In addition, the printouts from a number of other runs are included to illustrate the effects of conditions somewhat different from those summarized in the main text. These other runs were used to help determine the ranges of interest of system variables such as reactor size, feed temperature and liquid to solids ratio. For continuous reactors with external regeneration a number of runs are presented to show the effect of regeneration temperature on regeneration reactor volume.

For continuous reactors in parallel the alternative runs given are printouts from a series of early exploratory runs wherein the ratio of liquid to coal solids and the concentration of iron ion were changed, and the mixer and reactor volumes were adjusted correspondingly to accommodate the new solution conditions. The residence times, reactor temperature, % conversion of FeS_2 in the reactor, and the amounts of iron sulfate solution, acid, and water removed or added were altered, partially by cut-and-try methods, to get a meaningful output. The program used for these alternative runs was an early version arranged so that all of the oxygen was introduced in the mixer but did not participate in the reactions until the slurry reached the reactors. Also, conditions had not been optimized to give a 102°C mixer outlet temperature.

BATCH REACTORS

DATA CORRESPONDING TO TABLE 5 SECTION 4.2.4

MIXER

TEMPERATURE, DEG C = 102.0 PRESSURE, PSIA = 14.7

REACTOR VOLUME, GAL = 25000. RESIDENCE TIME, HR = .25

% CONV OF FES2 INPUT = 9.70 % OF INITIAL FES2 CONV = 9.70

FLOWRATE, T/HR	INPUT	OUTPUT
COAL(PURE)	94.00	94.00
FES2	6.00	5.41
S	.00	.12
FE2(SO4)3	57.30	48.36
FESO4	10.90	18.42
H2SO4	3.50	5.78
H2O	328.29	327.87
O2	.00	.00
INERT GAS	.00	.00
H2O VAPOR	.00	.00
TOTAL	499.99	499.99

****

FLOWRATE, LB MOL/HR	INPUT	OUTPUT
COAL(PURE)	14461.53	14461.53
FES2	100.03	90.32
S	.00	7.76
FE2(SO4)3	286.60	241.92
FESO4	143.51	242.57
H2SO4	71.37	117.98
H2O	36437.28	36390.66
O2	.00	.00
INERT GAS	.00	.00
H2O VAPOR	.00	.00
TOTAL	51500.33	51552.77

BATCH REACTORS

DATA CORRESPONDING TO TABLE 5 SECTION 4.2.4

REACTOR FILL CYCLE

INITIAL TEMPERATURE, DEG C = 125.0 FINAL TEMPERATURE, DEG C = 141.0

REACTOR VOLUME, GAL = 101028. RESIDENCE TIME, HR = 1.02

PRESSURE, PSIA = 80.0 % CONV OF FES2 INPUT = 42.01

QUANTITY, TONS	INPUT	OUTPUT
COAL(PURE)	95.87	95.87
FES2	5.51	3.19
S	.12	.61
FE2(SO4)3	49.31	71.48
FESO4	18.79	4.89
H2SO4	5.89	.83
H2O	334.42	335.27
O2	2.41	.10
INERT GAS	.01	.01
H2O VAPOR	.00	.08
TOTAL	512.39	512.38

****

QUANTITY, LB MOL	INPUT	OUTPUT
COAL(PURE)	14750.75	14750.75
FES2	92.00	53.34
S	7.63	38.55
FE2(SO4)3	246.67	357.54
FESO4	247.51	64.40
H2SO4	120.22	17.07
H2O	37117.31	37210.99
O2	151.17	6.83
INERT GAS	.75	.75
H2O VAPOR	.00	9.41
TOTAL	52734.02	52509.67

BATCH REACTORS

DATA CORRESPONDING TO TABLE 5 SECTION 4.2.4

REACTOR BATCH CYCLE

INITIAL TEMPERATURE, DEG C = 141.0 FINAL TEMPERATURE, DEG C = 150.4

REACTOR VOLUME, GAL = 100697. RESIDENCE TIME, HR = 7.99

PRESSURE, PSIA = 80.0 % CONV OF FES2 INPUT = 93.87

QUANTITY, TONS	INPUT	OUTPUT
COAL(PURE)	95.87	95.87
FES2	5.51	.33
S	.12	1.22
FE2(SO4)3	49.31	60.59
FESO4	18.79	16.78
H2SO4	5.89	3.97
H2O	334.42	334.59
O2	3.80	.17
INERT GAS	.02	.02
H2O VAPOR	.00	.17
TOTAL	513.78	513.76

****

QUANTITY, LB MOL	INPUT	OUTPUT
COAL(PURE)	14750.75	14750.75
FES2	92.00	5.63
S	7.63	76.72
FE2(SO4)3	246.67	303.07
FESO4	247.51	221.05
H2SO4	120.22	81.07
H2O	37117.31	37135.72
O2	237.59	10.74
INERT GAS	1.19	1.19
H2O VAPOR	.00	19.08
TOTAL	52820.87	52605.03

BATCH REACTORS

DATA FOR ALTERNATIVE RUN NO. 1

REACTOR FILL CYCLE

INITIAL TEMPERATURE, DEG C = 102.0 FINAL TEMPERATURE, DEG C = 113.1

REACTOR VOLUME, GAL = 101041. RESIDENCE TIME, HR = 1.02

PRESSURE, PSIA = 50.0 % CONV OF FES2 INPUT = 27.52

QUANTITY, TONS	INPUT	OUTPUT
COAL(PURE)	95.87	95.87
FES2	5.51	3.99
S	.12	.44
FE2(SO4)3	49.31	66.42
FESO4	18.79	7.72
H2SO4	5.89	1.94
H2O	334.42	335.12
O2	1.69	.07
INERT GAS	.01	.01
H2O VAPOR	.00	.02
TOTAL	511.66	511.66

****

QUANTITY, LB MOL	INPUT	OUTPUT
COAL(PURE)	14750.75	14750.75
FES2	92.00	66.67
S	7.63	27.89
FE2(SO4)3	246.67	332.26
FESO4	247.51	101.65
H2SO4	120.22	39.69
H2O	37117.31	37194.73
O2	105.82	4.78
INERT GAS	.53	.53
H2O VAPOR	.00	3.05
TOTAL	52688.44	52522.02

BATCH REACTORS

DATA FOR ALTERNATIVE RUN NO. 1

REACTOR BATCH CYCLE

INITIAL TEMPERATURE, DEG C = 113.1 FINAL TEMPERATURE, DEG C = 127.7

REACTOR VOLUME, GAL = 100755. RESIDENCE TIME, HR = 7.99

PRESSURE, PSIA = 50.0 % CONV OF FES2 INPUT = 91.06

QUANTITY, TONS	INPUT	OUTPUT
COAL(PURE)	95.87	95.87
FES2	5.51	.49
S	.12	1.19
FE2(SO4)3	49.31	63.11
FESO4	18.79	14.67
H2SO4	5.89	3.33
H2O	334.42	334.79
O2	3.80	.17
INERT GAS	.02	.02
H2O VAPOR	.00	.08
TOTAL	513.78	513.76

****

QUANTITY, LB MOL	INPUT	OUTPUT
COAL(PURE)	14750.75	14750.75
FES2	92.00	8.21
S	7.63	74.65
FE2(SO4)3	246.67	315.70
FESO4	247.51	193.20
H2SO4	120.22	67.93
H2O	37117.31	37158.31
O2	237.97	10.76
INERT GAS	1.19	1.19
H2O VAPOR	.00	9.63
TOTAL	52821.26	52590.35

CONTINUOUS REACTORS WITH EXTERNAL REGENERATION

DATA CORRESPONDING TO TABLE 6 SECTION 4.2.4

SETTLER #1

TEMPERATURE, DEG C = 102.0 PRESSURE, PSIA = 14.7

REACTOR VOLUME, GAL = 5000000. RESIDENCE TIME, HR = 18.40

% CONV OF FES2 INPUT = 72.86 % OF INITIAL FES2 CONV = 72.86

FLOWRATE, T/HR	INPUT	OUTPUT
COAL(PURE)	94.00	94.00
FES2	6.00	1.62
S	.00	.93
FE2(SO4)3	343.79	276.76
FESO4	29.02	85.48
H2SO4	9.32	26.47
H2O	984.89	981.74
O2	.00	.00
INERT GAS	.00	.00
H2O VAPOR	.00	.00
TOTAL	1467.03	1467.03

****

FLOWRATE, LB MOL/HR	INPUT	OUTPUT
COAL(PURE)	14461.53	14461.53
FES2	100.03	27.14
S	.00	58.30
FE2(SO4)3	1719.60	1384.33
FESO4	382.09	1125.51
H2SO4	190.04	539.89
H2O	109311.87	108962.03
O2	.00	.00
INERT GAS	.00	.00
H2O VAPOR	.00	.00
TOTAL	126165.17	126558.76

CONTINUOUS REACTORS WITH EXTERNAL REGENERATION

DATA CORRESPONDING TO TABLE 6 SECTION 4.2.4

SETTLER #2

TEMPERATURE, DEG C = 102.0 PRESSURE, PSIA = 14.7

REACTOR VOLUME, GAL = 5000000. RESIDENCE TIME, HR = 18.36

% CONV OF FES2 INPUT = 59.62 % OF INITIAL FES2 CONV = 59.62

FLOWRATE, T/HR	INPUT	OUTPUT
COAL(PURE)	94.00	94.00
FES2	1.62	.65
S	.93	1.13
FE2(SO4)3	347.18	332.37
FESO4	34.38	46.85
H2SO4	8.36	12.15
H2O	984.89	984.31
O2	.00	.00
INERT GAS	.00	.00
H2O VAPOR	.00	.00
TOTAL	1471.37	1471.48

****

FLOWRATE, LB MOL/HR	INPUT	OUTPUT
COAL(PURE)	14461.53	14461.53
FES2	27.00	10.90
S	58.01	70.89
FE2(SO4)3	1736.55	1662.45
FESO4	452.66	616.91
H2SO4	170.47	247.76
H2O	109311.87	109247.26
O2	.00	.00
INERT GAS	.00	.00
H2O VAPOR	.00	.00
TOTAL	126218.12	126317.71

CONTINUOUS REACTORS WITH EXTERNAL REGENERATION

DATA CORRESPONDING TO TABLE 6 SECTION 4.2.4

REGENERATION TANK

TEMPERATURE, DEG C = 130.0 PRESSURE, PSIA = 200.0

REACTOR DIAMETER, FT = 2.00 REACTOR LENGTH, FT = 147.5

% CONV OF FES2 INPUT = .00

FLOWRATE, T/HR	INPUT	OUTPUT
COAL(PURE)	.00	.00
FES2	.00	.00
S	.00	.00
FE2(SO4)3	522.55	609.32
FESO4	113.59	47.65
H2SO4	34.39	13.10
H2O	1708.31	1712.12
O2	3.64	.16
INERT GAS	.02	.02
H2O VAPOR	.00	.02
TOTAL	2382.51	2382.41

****

FLOWRATE, LB MOL/HR	INPUT	OUTPUT
COAL(PURE)	.00	.00
FES2	.00	.00
S	.00	.00
FE2(SO4)3	2613.71	3047.67
FESO4	1495.58	627.49
H2SO4	701.26	267.21
H2O	189602.65	190024.71
O2	227.49	10.47
INERT GAS	1.14	1.14
H2O VAPOR	.00	2.71
TOTAL	194641.81	193981.37

CONTINUOUS REACTORS WITH EXTERNAL REGENERATION

DATA FOR ALTERNATIVE RUN NO. 1

SETTLER #1

TEMPERATURE, DEG C = 102.0 PRESSURE, PSIA = 14.7

REACTOR VOLUME, GAL = 3000000. RESIDENCE TIME, HR = 11.03

% CONV OF FES2 INPUT = 66.92 % OF INITIAL FES2 CONV = 66.92

FLOWRATE, T/HR	INPUT	OUTPUT
COAL(PURE)	94.00	94.00
FES2	6.00	1.98
S	.00	.85
FE2(SO4)3	343.79	282.22
FESO4	29.02	80.88
H2SO4	9.32	25.07
H2O	984.89	982.14
O2	.00	.00
INERT GAS	.00	.00
H2O VAPOR	.00	.00
TOTAL	1467.03	1467.17

****

FLOWRATE, LB MOL/HR	INPUT	OUTPUT
COAL(PURE)	14461.53	14461.53
FES2	100.03	33.08
S	.00	53.55
FE2(SO4)3	1719.60	1411.62
FESO4	382.09	1064.94
H2SO4	190.04	511.39
H2O	109311.87	109006.46
O2	.00	.00
INERT GAS	.00	.00
H2O VAPOR	.00	.00
TOTAL	126165.17	126542.59

CONTINUOUS REACTORS WITH EXTERNAL REGENERATION

DATA FOR ALTERNATIVE RUN NO. 1

SETTLER #2

TEMPERATURE, DEG C = 102.0 PRESSURE, PSIA = 14.7

REACTOR VOLUME, GAL = 3000000. RESIDENCE TIME, HR = 11.03

% CONV OF FES2 INPUT = 54.58 % OF INITIAL FES2 CONV = 54.58

FLOWRATE, T/HR	INPUT	OUTPUT
COAL(PURE)	94.00	94.00
FES2	1.97	.89
S	.86	1.08
FE2(SO4)3	335.60	319.12
FESO4	35.84	49.72
H2SO4	11.39	15.61
H2O	984.21	983.44
O2	.00	.00
INERT GAS	.00	.00
H2O VAPOR	.00	.00
TOTAL	1463.88	1463.88

****

FLOWRATE, LB MOL/HR	INPUT	OUTPUT
COAL(PURE)	14461.53	14461.53
FES2	32.84	14.91
S	53.64	67.99
FE2(SO4)3	1678.63	1596.16
FESO4	471.88	654.75
H2SO4	232.25	318.31
H2O	109236.40	109150.34
O2	.00	.00
INERT GAS	.00	.00
H2O VAPOR	.00	.00
TOTAL	126167.21	126264.01

CONTINUOUS REACTORS WITH EXTERNAL REGENERATION

DATA FOR ALTERNATIVE RUN NO. 1

REGENERATION TANK

TEMPERATURE, DEG C = 102.0 PRESSURE, PSIA = 200.0

REACTOR DIAMETER, FT = 2.00 REACTOR LENGTH, FT = 444.0

% CONV OF FES2 INPUT = .00

FLOWRATE, T/HR	INPUT	OUTPUT
COAL(PURE)	.00	.00
FES2	.00	.00
S	.00	.00
FE2(SO4)3	522.55	609.40
FESO4	113.59	47.59
H2SO4	34.39	13.08
H2O	1708.31	1712.16
O2	3.64	.16
INERT GAS	.02	.02
H2O VAPOR	.00	.01
TOTAL	2382.51	2382.44

****

FLOWRATE, LB MOL/HR	INPUT	OUTPUT
COAL(PURE)	.00	.00
FES2	.00	.00
S	.00	.00
FE2(SO4)3	2613.71	3048.11
FESO4	1495.58	626.67
H2SO4	701.26	266.80
H2O	189602.65	190029.53
O2	227.49	10.27
INERT GAS	1.14	1.14
H2O VAPOR	.00	.93
TOTAL	194641.81	193983.43

CONTINUOUS REACTORS WITH EXTERNAL REGENERATION

DATA FOR ALTERNATIVE RUN NO. 2

REGENERATION TANK

TEMPERATURE, DEG C = 120.0 PRESSURE, PSIA = 200.0

REACTOR DIAMETER, FT = 2.00 REACTOR LENGTH, FT = 211.0

% CONV OF FES2 INPUT = .00

FLOWRATE, T/HR	INPUT	OUTPUT
COAL(PURE)	.00	.00
FES2	.00	.00
S	.00	.00
FE2(SO4)3	522.55	609.28
FESO4	113.59	47.68
H2SO4	34.39	13.11
H2O	1708.31	1712.15
O2	3.64	.16
INERT GAS	.02	.02
H2O VAPOR	.00	.01
TOTAL	2382.51	2382.44

****

FLOWRATE, LB MOL/HR	INPUT	OUTPUT
COAL(PURE)	.00	.00
FES2	.00	.00
S	.00	.00
FE2(SO4)3	2613.71	3047.50
FESO4	1495.58	627.89
H2SO4	701.26	267.41
H2O	189602.65	190028.00
O2	227.49	10.57
INERT GAS	1.14	1.14
H2O VAPOR	.00	1.89
TOTAL	194641.81	193984.34

CONTINUOUS REACTORS WITH EXTERNAL REGENERATION

DATA FOR ALTERNATIVE RUN NO. 3

REGENERATION TANK

TEMPERATURE, DEG C = 140.0 PRESSURE, PSIA = 200.0

REACTOR DIAMETER, FT = 2.00 REACTOR LENGTH, FT = 107.5

% CONV OF FES2 INPUT = .00

FLOWRATE, T/HR	INPUT	OUTPUT
COAL(PURE)	.00	.00
FES2	.00	.00
S	.00	.00
FE2(SO4)3	522.55	609.34
FESO4	113.59	47.64
H2SO4	34.39	13.09
H2O	1708.31	1712.13
O2	3.64	.16
INERT GAS	.02	.02
H2O VAPOR	.00	.03
TOTAL	2382.51	2382.44

****

FLOWRATE, LB MOL/HR	INPUT	OUTPUT
COAL(PURE)	.00	.00
FES2	.00	.00
S	.00	.00
FE2(SO4)3	2613.71	3047.79
FESO4	1495.58	627.31
H2SO4	701.26	267.12
H2O	189602.65	190025.96
O2	227.49	10.43
INERT GAS	1.14	1.14
H2O VAPOR	.00	3.92
TOTAL	194641.81	193983.62

CONTINUOUS REACTORS IN SERIES

DATA CORRESPONDING TO TABLE 7 SECTION 4.2.4

MIXER

TEMPERATURE IN, DEG C = 102.0 TEMPERATURE OUT, DEG C = 102.0

PRESSURE, PSIA = 14.7 HEAT LOSS, BTU/HR = 0.

REACTOR VOLUME, GAL = 50000. RESIDENCE TIME, HR = .50

% CONV OF FES2 INPUT = 14.34 % OF INITIAL FES2 CONV = 14.34

FLOWRATE, T/HR	INPUT	OUTPUT
COAL(PURE)	93.99998	93.99998
FES2	5.99999	5.13928
S	.00000	.18402
FE2(SO4)3	57.29998	44.10256
FESO4	10.89999	22.01683
H2SO4	3.49999	6.87788
H2O	328.29986	327.67926
O2	.00000	.00000
INERT GAS	.00000	.00000
H2O VAPOR	.00000	.00000
TOTAL	499.99975	499.99975

****

FLOWRATE, LB MOL/HR	INPUT	OUTPUT
COAL(PURE)	14461.537	14461.537
FES2	100.033	85.683
S	.000	11.480
FE2(SO4)3	286.600	220.590
FESO4	143.515	289.885
H2SO4	71.370	140.250
H2O	36437.289	36368.406
O2	.000	.000
INERT GAS	.000	.000
H2O VAPOR	.000	.000
TOTAL	51500.335	51577.828

CONTINUOUS REACTORS IN SERIES

DATA CORRESPONDING TO TABLE 7 SECTION 4.2.4

REACTOR NO, 1

EACH REACTOR IS 4 CSTRS IN SERIES

RECIRCULATION RATIO = ,00

DIRECTION OF FLOW IS UP

TEMPERATURE IN, DEG C = 150.0

TEMPERATURE OUT, DEG C = 150.0

PRESSURE, PSIA = 80.0

HEAT LOSS, BTU/HR = 0.

REACTOR VOLUME, GAL = 100000.

RESIDENCE TIME, HR = 1.01

% CONV OF FES2 INPUT = 59.35

% OF INITIAL FES2 CONV = 50.84

FLOWRATE, T/HR	INPUT	OUTPUT
COAL(PURE)	93.99998	93.99998
FES2	5.13928	2.08868
S	.18402	.83625
FE2(SO4)3	44.10256	57.30612
FESO4	22.01683	15.84803
H2SO4	6.87788	4.13807
H2O	327.67926	328.14508
O2	2.39999	.00000
INERT GAS	.01320	.01320
H2O VAPOR	.00000	.03737
TOTAL	502.41290	502.41271

****

FLOWRATE, LB MOL/HR	INPUT	OUTPUT
COAL(PURE)	14461.537	14461.537
FES2	85.683	34.822
S	11.480	52.168
FE2(SO4)3	220.590	286.630
FESO4	289.885	208.664
H2SO4	140.250	84.381
H2O	36368.406	36420.109
O2	149.999	.000
INERT GAS	.754	.754
H2O VAPOR	.000	4.148
TOTAL	51728.570	51553.203

CONTINUOUS REACTORS IN SERIES

DATA CORRESPONDING TO TABLE 7 SECTION 4.2.4

REACTOR NO. 2

EACH REACTOR IS 4 CSTRS IN SERIES

RECIRCULATION RATIO = .00

DIRECTION OF FLOW IS UP

TEMPERATURE IN, DEG C = 150.0

TEMPERATURE OUT, DEG C = 150.0

PRESSURE, PSIA = 80.0

HEAT LOSS, BTU/HR = 0.

REACTOR VOLUME, GAL = 100000.

RESIDENCE TIME, HR = 1.01

% CONV OF FES2 INPUT = 43.22

% OF INITIAL FES2 CONV = 15.04

FLOWRATE, T/HR	INPUT	OUTPUT
COAL(PURE)	93.99998	93.99998
FES2	2.08868	1.18591
S	.83625	1.02927
FE2(SO4)3	57.30612	68.45527
FESO4	15.84803	8.52038
H2SO4	4.13807	1.55095
H2O	328.14508	328.60467
O2	1.00000	.00000
INERT GAS	.00550	.00550
H2O VAPOR	.00000	.01553
TOTAL	503.36767	503.36743

****

FLOWRATE, LB MOL/HR	INPUT	OUTPUT
COAL(PURE)	14461.537	14461.537
FES2	34.822	19.771
S	52.168	64.209
FE2(SO4)3	286.630	342.396
FESO4	208.664	112.184
H2SO4	84.381	31.626
H2O	36420.109	36471.117
O2	62.500	.000
INERT GAS	.314	.314
H2O VAPOR	.000	1.724
TOTAL	51611.125	51504.867

CONTINUOUS REACTORS IN SERIES

DATA CORRESPONDING TO TABLE 7 SECTION 4.2.4

REACTOR NO. 3

EACH REACTOR IS 4 CSTRS IN SERIES

RECIRCULATION RATIO = .00 DIRECTION OF FLOW IS UP

TEMPERATURE IN, DEG C = 150.0 TEMPERATURE OUT, DEG C = 150.0

PRESSURE, PSIA = 80.0 HEAT LOSS, BTU/HR = 0.

REACTOR VOLUME, GAL = 100000. RESIDENCE TIME, HR = 1.01

% CONV OF FES2 INPUT = 32.39 % OF INITIAL FES2 CONV = 6.40

FLOWRATE, T/HR	INPUT	OUTPUT
COAL(PURE)	93.99998	93.99998
FES2	1.18591	.80170
S	1.02927	1.11141
FE2(SO4)3	68.45527	72.56022
FESO4	8.52038	5.88808
H2SO4	1.55095	.60688
H2O	328.60467	328.77172
O2	.39999	.00000
INERT GAS	.00220	.00220
H2O VAPOR	.00000	.00620
TOTAL	503.74859	503.74829

****

FLOWRATE, LB MOL/HR	INPUT	OUTPUT
COAL(PURE)	14461.537	14461.537
FES2	19.771	13.366
S	64.209	69.333
FE2(SO4)3	342.396	362.928
FESO4	112.184	77.525
H2SO4	31.626	12.375
H2O	36471.117	36489.656
O2	24.999	.000
INERT GAS	.125	.125
H2O VAPOR	.000	.689
TOTAL	51527.953	51487.531

CONTINUOUS REACTORS IN SERIES

DATA CORRESPONDING TO TABLE 7 SECTION 4.2.4

REACTOR NO. 4

EACH REACTOR IS 4 CSTRS IN SERIES

RECIRCULATION RATIO = .00 DIRECTION OF FLOW IS UP

TEMPERATURE IN, DEG C = 150.0 TEMPERATURE OUT, DEG C = 150.0

PRESSURE, PSIA = 80.0 HEAT LOSS, BTU/HR = 0.

REACTOR VOLUME, GAL = 100000. RESIDENCE TIME, HR = 1.01

% CONV OF FES2 INPUT = 23.09 % OF INITIAL FES2 CONV = 3.08

FLOWRATE, T/HR	INPUT	OUTPUT
COAL(PURE)	93.99998	93.99998
FES2	.80170	.61651
S	1.11141	1.15101
FE2(SO4)3	72.56022	69.72070
FESO4	5.88808	8.27993
H2SO4	.60688	1.33366
H2O	328.77172	328.63793
O2	.00000	.00000
INERT GAS	.00000	.00000
H2O VAPOR	.00000	.00000
	---	---
TOTAL	503.73992	503.73968

****

FLOWRATE, LB MOL/HR	INPUT	OUTPUT
COAL(PURE)	14461.537	14461.537
FES2	13.366	10.278
S	69.333	71.803
FE2(SO4)3	362.928	348.725
FESO4	77.525	109.018
H2SO4	12.375	27.195
H2O	36489.656	36474.812
O2	.000	.000
INERT GAS	.000	.000
H2O VAPOR	.000	.000
	---	---
TOTAL	51486.718	51503.367

CONTINUOUS REACTORS IN SERIES

DATA CORRESPONDING TO TABLE 7 SECTION 4.2.4

REACTOR NO. 5

EACH REACTOR IS 4 CSTRS IN SERIES

RECIRCULATION RATIO = .00 DIRECTION OF FLOW IS UP

TEMPERATURE IN, DEG C = 150.0 TEMPERATURE OUT, DEG C = 150.0

PRESSURE, PSIA = 80.0 HEAT LOSS, BTU/HR = 0.

REACTOR VOLUME, GAL = 100000. RESIDENCE TIME, HR = 1.01

% CONV OF FES2 INPUT = 18.03 % OF INITIAL FES2 CONV = 1.85

FLOWRATE, T/HR	INPUT	OUTPUT
COAL(PURE)	93.99998	93.99998
FES2	.61651	.50531
S	1.15101	1.17478
FE2(SO4)3	69.72070	68.01562
FESO4	8.27993	9.71618
H2SO4	1.33366	1.77006
H2O	328.63793	328.55767
O2	.00000	.00000
INERT GAS	.00000	.00000
H2O VAPOR	.00000	.00000
TOTAL	503.73968	503.73956

****

FLOWRATE, LB MOL/HR	INPUT	OUTPUT
COAL(PURE)	14461.537	14461.537
FES2	10.278	8.424
S	71.803	73.286
FE2(SO4)3	348.725	340.197
FESO4	109.018	127.928
H2SO4	27.195	36.094
H2O	36474.812	36465.898
O2	.000	.000
INERT GAS	.000	.000
H2O VAPOR	.000	.000
TOTAL	51503.367	51513.359

CONTINUOUS REACTORS IN SERIES

DATA CORRESPONDING TO TABLE 7 SECTION 4.2.4

REACTOR NO. 6

EACH REACTOR IS 4 CSTRS IN SERIES

RECIRCULATION RATIO = .00 DIRECTION OF FLOW IS UP

TEMPERATURE IN, DEG C = 150.0 TEMPERATURE OUT, DEG C = 150.0

PRESSURE, PSIA = 80.0 HEAT LOSS, BTU/HR = 0.

REACTOR VOLUME, GAL = 100000. RESIDENCE TIME, HR = 1.01

% CONV OF FES2 INPUT = 14.85 % OF INITIAL FES2 CONV = 1.25

FLOWRATE, T/HR	INPUT	OUTPUT
COAL(PURE)	93.99998	93.99998
FES2	.50531	.43023
S	1.17478	1.19083
FE2(SO4)3	68.01562	66.86445
FESO4	9.71618	10.68584
H2SO4	1.77006	2.06470
H2O	328.55767	328.50335
O2	.00000	.00000
INERT GAS	.00000	.00000
H2O VAPOR	.00000	.00000
TOTAL	503.73956	503.73937

****

FLOWRATE, LB MOL/HR	INPUT	OUTPUT
COAL(PURE)	14461.537	14461.537
FES2	8.424	7.173
S	73.286	74.288
FE2(SO4)3	340.197	334.439
FESO4	127.928	140.695
H2SO4	36.094	42.102
H2O	36465.898	36459.875
O2	.000	.000
INERT GAS	.000	.000
H2O VAPOR	.000	.000
TOTAL	51513.359	51520.101

CONTINUOUS REACTORS IN SERIES

DATA CORRESPONDING TO TABLE 7 SECTION 4.2.4

REACTOR NO, 7

EACH REACTOR IS 4 CSTRS IN SERIES

RECIRCULATION RATIO = .00 DIRECTION OF FLOW IS UP

TEMPERATURE IN, DEG C = 150.0 TEMPERATURE OUT, DEG C = 150.0

PRESSURE, PSIA = 80.0 HEAT LOSS, BTU/HR = 0.

REACTOR VOLUME, GAL = 100000. RESIDENCE TIME, HR = 1.01

% CONV OF FES2 INPUT = 12.66 % OF INITIAL FES2 CONV = .90

FLOWRATE, T/HR	INPUT	OUTPUT
COAL(PURE)	93.99998	93.99998
FES2	.43023	.37574
S	1.19083	1.20248
FE2(SO4)3	66.86445	66.02893
FESO4	10.68584	11.38961
H2SO4	2.06470	2.27854
H2O	328.50335	328.46398
O2	.00000	.00000
INERT GAS	.00000	.00000
H2O VAPOR	.00000	.00000
TOTAL	503.73937	503.73925

****

FLOWRATE, LB MOL/HR	INPUT	OUTPUT
COAL(PURE)	14461.537	14461.537
FES2	7.173	6.264
S	74.288	75.014
FE2(SO4)3	334.439	330.260
FESO4	140.695	149.962
H2SO4	42.102	46.463
H2O	36459.875	36455.500
O2	.000	.000
INERT GAS	.000	.000
H2O VAPOR	.000	.000
TOTAL	51520.101	51524.992

CONTINUOUS REACTORS IN SERIES

DATA CORRESPONDING TO TABLE 7 SECTION 4.2.4

REACTOR NO. 8

EACH REACTOR IS 4 CSTRS IN SERIES

RECIRCULATION RATIO = .00 DIRECTION OF FLOW IS UP

TEMPERATURE IN, DEG C = 150.0 TEMPERATURE OUT, DEG C = 150.0

PRESSURE, PSIA = 80.0 HEAT LOSS, BTU/HR = 0.

REACTOR VOLUME, GAL = 100000. RESIDENCE TIME, HR = 1.01

% CONV OF FES2 INPUT = 11.05 % OF INITIAL FES2 CONV = .69

FLOWRATE, T/HR	INPUT	OUTPUT
COAL(PURE)	93.99998	93.99998
FES2	.37574	.33420
S	1.20248	1.21136
FE2(SO4)3	66.02893	65.39186
FESO4	11.38961	11.92622
H2SO4	2.27854	2.44159
H2O	328.46398	328.43389
O2	.00000	.00000
INERT GAS	.00000	.00000
H2O VAPOR	.00000	.00000
	---	---
TOTAL	503.73925	503.73907

****

FLOWRATE, LB MOL/HR	INPUT	OUTPUT
COAL(PURE)	14461.537	14461.537
FES2	6.264	5.571
S	75.014	75.568
FE2(SO4)3	330.260	327.073
FESO4	149.962	157.027
H2SO4	46.463	49.787
H2O	36455.500	36452.164
O2	.000	.000
INERT GAS	.000	.000
H2O VAPOR	.000	.000
	---	---
TOTAL	51524.992	51528.718

CONTINUOUS REACTORS IN PARALLEL

DATA CORRESPONDING TO TABLE 8 COLUMNS 1&2 SECTION 4.2.4

MIXER

TEMPERATURE IN, DEG C = 101.1 TEMPERATURE OUT, DEG C = 102.0

PRESSURE, PSIA = 14.7 HEAT LOSS, BTU/HR = 242910.

REACTOR VOLUME, GAL = 50000. RESIDENCE TIME, HR = .50

% CONV OF FES2 INPUT = 14.35 % OF INITIAL FES2 CONV = 14.35

FLOWRATE, T/HR	INPUT	OUTPUT
COAL(PURE)	93.99998	93.99998
FES2	5.99999	5.13843
S	.00000	.18420
FE2(SO4)3	57.29998	44.08956
FESO4	10.89999	22.02778
H2SO4	3.49999	6.88121
H2O	328.29986	327.67858
O2	.00000	.00000
INERT GAS	.00000	.00000
H2O VAPOR	.00000	.00000
TOTAL	499.99975	499.99969

****

FLOWRATE, LB MOL/HR	INPUT	OUTPUT
COAL(PURE)	14461.537	14461.537
FES2	100.033	85.669
S	.000	11.491
FE2(SO4)3	286.600	220.525
FESO4	143.515	290.030
H2SO4	71.370	140.318
H2O	36437.289	36368.335
O2	.000	.000
INERT GAS	.000	.000
H2O VAPOR	.000	.000
TOTAL	51500.335	51577.898

CONTINUOUS REACTORS IN PARALLEL

DATA CORRESPONDING TO TABLE 8 COLUMNS 3&4 SECTION 4.2.4

EACH REACTOR IS 10 CSTRS IN SERIES

RECIRCULATION RATIO = .00 DIRECTION OF FLOW IS UP

TEMPERATURE IN, DEG C = 130.0 TEMPERATURE OUT, DEG C = 146.7

PRESSURE, PSIA = 80.0 HEAT LOSS, BTU/HR =1028849.

REACTOR VOLUME, GAL = 100000. RESIDENCE TIME, HR = 10.11

% CONV OF FES2 INPUT = 93.46 % OF INITIAL FES2 CONV = 80.04

ONE OF 10 PARALLEL REACTORS

FLOWRATE, T/HR	INPUT	OUTPUT
COAL(PURE)	9.39999	9.39999
FES2	.51384	.03358
S	.01842	.12110
FE2(SO4)3	4.40895	6.16203
FESO4	2.20277	1.47896
H2SO4	.68812	.33664
H2O	32.76786	32.82887
O2	.36479	.00000
INERT GAS	.00200	.00200
H2O VAPOR	.00000	.00354
TOTAL	50.36676	50.36673

****

FLOWRATE, LB MOL/HR	INPUT	OUTPUT
COAL(PURE)	1446.153	1446.153
FES2	8.566	.559
S	1.149	7.554
FE2(SO4)3	22.052	30.820
FESO4	29.003	19.472
H2SO4	14.031	6.864
H2O	3636.833	3643.604
O2	22.799	.000
INERT GAS	.114	.114
H2O VAPOR	.000	.393
TOTAL	5180.704	5155.537

CONTINUOUS REACTORS IN PARALLEL

DATA CORRESPONDING TO TABLE 8 COLUMNS 5, 6 & 9 SECTION 4.2.4

MIXER

TEMPERATURE IN, DEG C = 100.4

TEMPERATURE OUT, DEG C = 102.0

PRESSURE, PSIA = 14.7

HEAT LOSS, BTU/HR = 341927.

REACTOR VOLUME, GAL = 83525.

RESIDENCE TIME, HR = 1.04

% CONV OF FES2 INPUT = 13.86

% OF INITIAL FES2 CONV = 13.86

FLOWRATE, T/HR	INPUT	OUTPUT	REMOVE	ADD
COAL(PURE)	113.49996	113.49996		
FES2	8.14999	7.02036		
S	.00000	.24151		
FE2(SO4)3	34.84999	17.52930	4.983	
FESO4	6.62999	21.22006	6.032	
H2SO4	2.12999	6.56323	1.866	1.821
H2O	238.97973	238.16522	39.2897	2.293
O2	.00000	.00000		
INERT GAS	.00000	.00000		
H2O VAPOR	.00000	.00000		
	---	---		
TOTAL	404.23962	404.23962	52.1707	4.114

****

FLOWRATE, LB MOL/HR	INPUT	OUTPUT
COAL(PURE)	17461.535	17461.535
FES2	135.878	117.045
S	.000	15.066
FE2(SO4)3	174.310	87.677
FESO4	87.294	279.395
H2SO4	43.433	133.834
H2O	26523.839	26433.437
O2	.000	.000
INERT GAS	.000	.000
H2O VAPOR	.000	.000
	---	---
TOTAL	44426.281	44527.984

CONTINUOUS REACTORS IN PARALLEL

DATA CORRESPONDING TO TABLE 8 COLUMNS 7 & 8 SECTION 4.2.4

ONE OF TEN PARALLEL REACTORS

EACH REACTOR IS 10 CSTRS IN SERIES

RECIRCULATION RATIO = .00 DIRECTION OF FLOW IS UP

TEMPERATURE IN, DEG C = 102.0 TEMPERATURE OUT, DEG C = 145.4

PRESSURE, PSIA = 80.0 HEAT LOSS, BTU/HR = 775635.

REACTOR VOLUME, GAL = 67780. RESIDENCE TIME, HR = 9.67

% CONV OF FES2 INPUT = 94.36 % OF INITIAL FES2 CONV = 94.36

ONE OF 10 PARALLEL REACTORS

FLOWRATE, T/HR	INPUT	OUTPUT
COAL(PURE)	11.34999	11.34999
FES2	.70203	.03955
S	.02415	.16579
FE2(SO4)3	1.25462	3.48513
FESO4	1.51880	.66301
H2SO4	.65182	.21304
H2O	20.11684	20.19325
O2	.49569	.00000
INERT GAS	.00272	.00272
H2O VAPOR	.00000	.00418
TOTAL	36.11669	36.11667

****

FLOWRATE, LB MOL/HR	INPUT	OUTPUT
COAL(PURE)	1746.153	1746.153
FES2	11.704	.659
S	1.506	10.342
FE2(SO4)3	6.275	17.431
FESO4	19.997	8.729
H2SO4	13.291	4.344
H2O	2232.724	2241.205
O2	30.981	.000
INERT GAS	.155	.155
H2O VAPOR	.000	.464
TOTAL	4062.789	4029.484

CONTINUOUS REACTORS IN PARALLEL

DATA FOR ALTERNATIVE RUN NO. 1

MIXER

TEMPERATURE IN, DEG C = 102.0 TEMPERATURE OUT, DEG C = 103.7

PRESSURE, PSIA = 14.7 HEAT LOSS, BTU/HR = 312426.

REACTOR VOLUME, GAL = 72684. RESIDENCE TIME, HR = 1.00

% CONV OF FES2 INPUT = 13.86 % OF INITIAL FES2 CONV = 13.86

5% IRON SOLUTION 2# LIQUID/#COAL SOLIDS

FLOWRATE, T/HR	INPUT	OUTPUT	REMOVE
COAL(PURE)	113.4999	113.4999	
FES2	8.1499	7.0203	
S	.0000	.2415	
FE2(SO4)3	34.8499	17.5295	4.983
FESO4	6.6299	21.2197	6.032
H2SO4	2.1299	6.5631	0.045
H2O	199.6899	198.8751	
O2	4.9569	4.9569	
INERT GAS	.0272	.0272	
H2O VAPOR	.0000	.0000	
TOTAL	369.9339	369.9335	11.060

CONTINUOUS REACTORS IN PARALLEL

EACH REACTOR IS 10 CSTRS IN SERIES

RECIRCULATION RATIO = .00 DIRECTION OF FLOW IS UP

TEMPERATURE IN, DEG C = 102.0 TEMPERATURE OUT, DEG C = 152.3

PRESSURE, PSIA = 80.0 HEAT LOSS, BTU/HR = 794489.

REACTOR VOLUME, GAL = 68640. RESIDENCE TIME, HR = 9.88

% CONV OF FES2 INPUT = 94.36 % OF INITIAL FES2 CONV = 94.36

ONE OF 10 PARALLEL REACTORS

FLOWRATE, T/HR	INPUT	OUTPUT
COAL(PURE)	11.3499	11.3499
FES2	.7020	.0395
S	.0241	.1657
FE2(SO4)3	1.2546	3.4849
FESO4	1.5187	.6630
H2SO4	.6518	.2130
H2O	19.8875	19.9548
O2	.4957	.0000
INERT GAS	.0027	.0027
H2O VAPOR	.0000	.0128
TOTAL	35.6873	35.8867

CONTINUOUS REACTORS IN PARALLEL

DATA FOR ALTERNATIVE RUN NO. 2

MIXER

TEMPERATURE IN, DEG C = 102.0 TEMPERATURE OUT, DEG C = 103.9

PRESSURE, PSIA = 14.7 HEAT LOSS, BTU/HR = 140469.

REACTOR VOLUME, GAL = 70390. RESIDENCE TIME, HR = 1.00

% CONV OF FES2 INPUT = 13.86 % OF INITIAL FES2 CONV = 13.86

5% IRON SOLUTION 2# LIQUID/# COAL SOLIDS

FLOWRATE, T/HR	INPUT	OUTPUT	REMOVE
COAL(PURE)	113.4999	113.4999	
FES2	8.1499	7.0203	
S	.0000	.2415	
FE2(SO4)3	34.8499	17.5295	4.983
FESO4	6.6299	21.2197	6.032
H2SO4	2.1299	6.5631	0.045
H2O	199.6899	198.8752	
O2	4.9569	4.9569	
INERT GAS	.0272	.0272	
H2O VAPOR	.0000	.0000	
TOTAL	369.9339	369.9335	11.060

CONTINUOUS REACTORS IN PARALLEL

EACH REACTOR IS 10 CSTRS IN SERIES

RECIRCULATION RATIO = .00 DIRECTION OF FLOW IS UP

TEMPERATURE IN, DEG C = 102.0 TEMPERATURE OUT, DEG C = 152.4

PRESSURE, PSIA = 80.0 HEAT LOSS, BTU/HR = 791988.

REACTOR VOLUME, GAL = 68340. RESIDENCE TIME, HR = 9.90

% CONV OF FES2 INPUT = 94.36 % OF INITIAL FES2 CONV = 94.36

ONE OF 10 PARALLEL REACTORS

FLOWRATE, T/HR	INPUT	OUTPUT
COAL(PURE)	11.3499	11.3499
FES2	.7020	.0395
S	.0241	.1657
FE2(SO4)3	1.2546	3.4849
FESO4	1.5187	.6630
H2SO4	.6518	.2130
H2O	19.8875	19.6682
O2	.4957	.0000
INERT GAS	.0027	.0027
H2O VAPOR	.0000	.0132
TOTAL	35.8873	35.6006

CONTINUOUS REACTORS IN PARALLEL

DATA FOR ALTERNATIVE RUN NO. 3

MIXER

TEMPERATURE IN, DEG C = 122.0

TEMPERATURE OUT, DEG C = 103.8

PRESSURE, PSIA = 14.7

HEAT LOSS, BTU/HR = 561493.

REACTOR VOLUME, GAL = 170170.

RESIDENCE TIME, HR = 1.78

% CONV OF FES2 INPUT = 20.79

% OF INITIAL FES2 CONV = 20.79

5% IRON SOLUTION

3#LIQUID/# COAL SOLIDS

FLOWRATE, T/HR	INPUT	OUTPUT	REMOVE
COAL(PURE)	113.4999	113.4999	
FES2	8.1499	6.4555	
S	.0000	.3622	
FE2(SO4)3	52.2749	26.2939	4.983
FESO4	9.9449	31.8299	6.032
H2SO4	3.1949	9.8448	0.045
H2O	299.5349	298.3121	
O2	4.9569	4.9569	
INERT GAS	.0272	.0272	
H2O VAPOR	.0000	.0000	
	---	---	---
TOTAL	491.5839	491.5827	11.060

CONTINUOUS REACTORS IN PARALLEL

EACH REACTOR IS 10 CSTRS IN SERIES

RECIRCULATION RATIO = .00

DIRECTION OF FLOW IS UP

TEMPERATURE IN, DEG C = 119.0

TEMPERATURE OUT, DEG C = 152.2

PRESSURE, PSIA = 80.0

HEAT LOSS, BTU/HR = 960383.

REACTOR VOLUME, GAL = 88350.

RESIDENCE TIME, HR = 9.38

% CONV OF FES2 INPUT = 93.87

% OF INITIAL FES2 CONV = 93.87

ONE OF 10 PARALLEL REACTORS

FLOWRATE, T/HR	INPUT	OUTPUT
COAL(PURE)	11.3499	11.3499
FES2	.6455	.0395
S	.0362	.1657
FE2(SO4)3	2.1310	5.2274
FESO4	2.5797	.9945
H2SO4	.9799	.3195
H2O	29.8311	29.7023
O2	.4957	.0000
INERT GAS	.0027	.0027
H2O VAPOR	.0000	.0124
	---	---
TOTAL	48.0522	47.8144

CONTINUOUS REACTORS IN PARALLEL

DATA FOR ALTERNATIVE RUN NO. 4

MIXER

TEMPERATURE IN, DEG C = 102.0

TEMPERATURE OUT, DEG C = 103.0

PRESSURE, PSIA = 14.7

HEAT LOSS, BTU/HR = 110676.

REACTOR VOLUME, GAL = 50000.

RESIDENCE TIME, HR = .42

% CONV OF FES2 INPUT = 14.08

% OF INITIAL FES2 CONV = 14.08

5.6% IRON SOLUTION

4# LIQUID/# COAL SOLIDS

FLOWRATE, T/HR	INPUT	OUTPUT
COAL(PURE)	113.4999	113.4999
FES2	8.1499	7.0019
S	.0000	.2454
FE2(SO4)3	77.8299	60.2272
FESO4	14.8099	29.6375
H2SO4	4.7499	9.2554
H2O	389.2058	388.3777
O2	4.9569	4.9569
INERT GAS	.0272	.0272
H2O VAPOR	.0000	.0000
TOTAL	613.2297	613.2292

CONTINUOUS REACTORS IN PARALLEL

EACH REACTOR IS 10 CSTRS IN SERIES

RECIRCULATION RATIO = .00

DIRECTION OF FLOW IS UP

TEMPERATURE IN, DEG C = 126.0

TEMPERATURE OUT, DEG C = 154.7

PRESSURE, PSIA = 80.0

HEAT LOSS, BTU/HR = 539885.

REACTOR VOLUME, GAL = 120000.

RESIDENCE TIME, HR = 10.16

% CONV OF FES2 INPUT = 94.32

% OF INITIAL FES2 CONV = 81.03

ONE OF 10 PARALLEL REACTORS

FLOWRATE, T/HR	INPUT	OUTPUT
COAL(PURE)	11.3499	11.3499
FES2	.7001	.0397
S	.0245	.1657
FE2(SO4)3	6.0227	8.2846
FESO4	2.9637	2.0814
H2SO4	.9255	.4786
H2O	38.8377	38.7567
O2	.4957	.0000
INERT GAS	.0027	.0027
H2O VAPOR	.0000	.0295
TOTAL	61.3229	61.1892

CONTINUOUS REACTORS IN PARALLEL

DATA FOR ALTERNATIVE RUN NO. 5

MIXER

TEMPERATURE IN, DEG C = 102.0

TEMPERATURE OUT, DEG C = 103.7

PRESSURE, PSIA = 14.7

HEAT LOSS, BTU/HR = 111568.

REACTOR VOLUME, GAL = 50000.

RESIDENCE TIME, HR = .71

% CONV OF FES2 INPUT = 12.42

% OF INITIAL FES2 CONV = 12.42

5% IRON SOLUTION

2.04# LIQUID/# COAL SOLIDS

FLOWRATE, T/HR	INPUT	OUTPUT
COAL(PURE)	113.4999	113.4999
FES2	8.1499	7.1375
S	.0000	.2164
FE2(SO4)3	34.8499	19.3267
FESO4	6.6299	19.7059
H2SO4	2.1299	6.1031
H2O	199.6899	198.9597
O2	4.9569	4.9569
INERT GAS	.0272	.0272
H2O VAPOR	.0000	.0000
TOTAL	369.9339	369.9337

CONTINUOUS REACTORS IN PARALLEL

EACH REACTOR IS 10 CSTRS IN SERIES

RECIRCULATION RATIO = .00

DIRECTION OF FLOW IS UP

TEMPERATURE IN, DEG C = 102.0

TEMPERATURE OUT, DEG C = 156.2

PRESSURE, PSIA = 80.0

HEAT LOSS, BTU/HR = 392400.

REACTOR VOLUME, GAL = 75000.

RESIDENCE TIME, HR = 10.75

% CONV OF FES2 INPUT = 94.46

% OF INITIAL FES2 CONV = 82.72

ONE OF 10 PARALLEL REACTORS

FLOWRATE, T/HR	INPUT	OUTPUT
COAL(PURE)	11.3499	11.3499
FES2	.7137	.0395
S	.0216	.1657
FE2(SO4)3	1.9326	3.9833
FESO4	1.9705	1.2662
H2SO4	.6103	.2175
H2O	19.8959	19.5779
O2	.4957	.0000
INERT GAS	.0027	.0027
H2O VAPOR	.0000	.1896
TOTAL	36.9933	36.7928

CONTINUOUS REACTORS IN PARALLEL

DATA FOR ALTERNATIVE RUN NO. 6

MIXER

TEMPERATURE IN, DEG C = 102.0 TEMPERATURE OUT, DEG C = 103.7

PRESSURE, PSIA = 14.7 HEAT LOSS, BTU/HR = 111579.

REACTOR VOLUME, GAL = 50000. RESIDENCE TIME, HR = .56

% CONV OF FES2 INPUT = 16.36 % OF INITIAL FES2 CONV = 16.36

7.5% IRON SOLUTION 3.02# LIQUIDS/# COAL SOLIDS

FLOWRATE, T/HR	INPUT	OUTPUT
COAL(PURE)	113.4999	113.4999
FES2	8.1499	6.8161
S	.0000	.2651
FE2(SO4)3	77.8299	57.3782
FESO4	14.8099	32.0374
H2SO4	4.7499	9.9846
H2O	265.0398	264.0779
O2	4.9569	4.9569
INERT GAS	.0272	.0272
H2O VAPOR	.0000	.0000
TOTAL	489.0638	489.0635

CONTINUOUS REACTORS IN PARALLEL

EACH REACTOR IS 10 CSTRS IN SERIES

RECIRCULATION RATIO = .00 DIRECTION OF FLOW IS UP

TEMPERATURE IN, DEG C = 110.0 TEMPERATURE OUT, DEG C = 149.9

PRESSURE, PSIA = 80.0 HEAT LOSS, BTU/HR = 444150.

REACTOR VOLUME, GAL = 95000. RESIDENCE TIME, HR = 10.75

% CONV OF FES2 INPUT = 94.00 % OF INITIAL FES2 CONV = 78.62

ONE OF 10 PARALLEL REACTORS

FLOWRATE, T/HR	INPUT	OUTPUT
COAL(PURE)	11.3499	11.3499
FES2	.6816	.0408
S	.0285	.1655
FE2(SO4)3	5.7378	8.3014
FESO4	3.2037	2.0672
H2SO4	.9984	.4743
H2O	26.4077	26.4129
O2	.4957	.0000
INERT GAS	.0027	.0027
H2O VAPOR	.0000	.0069
TOTAL	48.9063	48.8219

CONTINUOUS REACTORS IN PARALLEL

DATA FOR ALTERNATIVE RUN NO. 7

MIXER

TEMPERATURE IN, DEG C = 102.0 TEMPERATURE OUT, DEG C = 102.9

PRESSURE, PSIA = 14.7 HEAT LOSS, BTU/HR = 110432.

REACTOR VOLUME, GAL = 50000. RESIDENCE TIME, HR = .37

% CONV OF FES2 INPUT = 13.27 % OF INITIAL FES2 CONV = 13.27

5% IRON SOLUTION 4.5# LIQUID/# COAL SOLIDS

FLOWRATE, T/HR	INPUT	OUTPUT
COAL(PURE)	113.4999	113.4999
FES2	8.1499	7.0679
S	.0000	.2313
FE2(SO4)3	77.8299	61.2394
FESO4	14.8099	28.7849
H2SO4	4.7499	8.9963
H2O	445.9398	445.1594
O2	4.9569	4.9569
INERT GAS	.0272	.0272
H2O VAPOR	.0000	.0000
TOTAL	669.9636	669.9633

CONTINUOUS REACTORS IN PARALLEL

EACH REACTOR IS 10 CSTRS IN SERIES

RECIRCULATION RATIO = .00 DIRECTION OF FLOW IS UP

TEMPERATURE IN, DEG C = 130.0 TEMPERATURE OUT, DEG C = 155.5

PRESSURE, PSIA = 80.0 HEAT LOSS, BTU/HR = 542684.

REACTOR VOLUME, GAL = 120000. RESIDENCE TIME, HR = 9.11

% CONV OF FES2 INPUT = 93.95 % OF INITIAL FES2 CONV = 81.48

ONE OF 10 PARALLEL REACTORS

FLOWRATE, T/HR	INPUT	OUTPUT
COAL(PURE)	11.3499	11.3499
FES2	.7067	.0427
S	.0231	.1651
FE2(SO4)3	6.1239	8.3309
FESO4	2.8784	2.0424
H2SO4	.8996	.4668
H2O	44.5159	44.3613
O2	.4957	.0000
INERT GAS	.0027	.0027
H2O VAPOR	.0000	.0655
TOTAL	66.9963	66.8276

10.5 MATERIAL AND ENERGY BALANCE

The computer program for calculating the material and energy balance is the proprietary information of The Dow Chemical Company and accordingly cannot be included in this report.

The stream numbers, their description, and the results of the material and energy balance computations are presented in the following pages.

10.5.1 Stream List and Descriptions

STREAM NUMBER	DESCRIPTION
1	Pulverized Coal to 100-V-1 Mixer
2	Filtrate (Sulfates) from 400-F-1A-D to Stream #4
3	Vent from 100-V-1 to 1500-V-1 Scrubber
4	Sulfates Return to 100-V-1 Mixer
5	Slurry from 100-V-1 to Streams #16 and #105
6	Oxygen to Reactors 200-R-1A-K
7	Slurry from Streams #23 and #105 to Reactors 200-R-1A-K
8	Vent from Reactors 200-R-1A-K to 1500-V-1 Scrubber
9	Leached Coal Slurry from Reactors to 200-E-1 Cooler
10	Leached Coal Slurry from Cooler 200-E-1 to Filter 400-F-1A-D
11	Steam from Line #24 to 100-V-1 Mixer
12	Water from 1100-P-3A&B to Stream #4 (startup only)
14	Sulfates from Stream #40 to 100-V-1 Mixer
15	Coal Filter Cake from 400-F-1A-D to 500-V-1 Extractor
16	Slurry from Stream #5 to 1100-F-1A&B Filters
17	Steam from Stream #25 to 1100-V-2 Reslurry Tank
18	Coal Filter Cake from 1100-F-1A&B Filters to 1100-V-2 Reslurry Tank
19	Sulfates from 1100-F-1A&B Filters to 1100-V-1 Concentrator
20	Sulfates from 1100-V-1 Concentrator to 1100-E-1 Reboiler
21	Sulfates from 1100-V-1 Concentrator to 1100-E-2 Cooler
22	Iron Sulfates Waste from 1100-F-2 Filter & 1100-ME-2 Dryer

STREAM NUMBER	DESCRIPTION
23	Slurry from 1100-V-2 Reslurry Tank to Stream #105
24	Sulfates from Stream #123 to 1100-ME-2 Dryer
25	Steam from 1100-V-1 Concentrator
26	Steam from Line #25 to 1100-ME-1 Water Heater
27	Extracted Coal Slurry from 500-V-1 Extractor to 600-F-1A-D Filters
28	Water from 100-ME-1 Heater to 1100-T-1 Water Surge
29	Washed Coal Filter Cake from 600-F-1A-D Filters to 700-V-1 Water Wash Tank
30	Filtrate from 600-F-1A-D Filters to 600-V-1 Decanter
31	Distilled Solvent from 1400-T-2 Surge to Stream #37
32	Sulfates from 600-V-1 Decanter to Stream #4
33	Solvent from 800-V-1 Decanter to 1400-T-1 Still Feed Tank
34	Solvent from 1400-T-1 Feed Tank to Streams #72 & #73
35	Sulfur Product from 1400-V-1 Still to 1400-T-3 Sulfur Storage
36	Distilled Solvent from 1400-E-4 Cooler to 1400-T-2 Surge
37	Solvent from Streams #31 and #73 to 500-V-1 Extractor
38	Solvent from 600-V-1 Decanter to 1400-T-1 Still Feed Tank
39	Washed Coal Slurry from 700-V-1 Water Wash Tank to 800-F-1A-D Filters
40	Weak Sulfates from 800-V-1 Decanter to Streams #14 and #43
41	Wash Water from 800-F-1A-D Filter to Stream #44
42	Filtrate from 800-F-1A-D Filters to 800-V-1 Decanter
43	From Stream #40 to Stream #44
44	From Streams #41 and #43 to 700-V-1 Water Wash Tank

STREAM NUMBER	DESCRIPTION
45	Washed Coal Filter Cake from 800-F-1A-D to 900-ME-1 Dryer
46	Water and Solvent Vapors from 900-ME-1 Dryer to 900-E-1 Condenser
47	Wash Water from 1100-T-1 Surge to 800-F-1A-D Filters
48	Condensate from 900-E-1 Condenser to 900-V-1 Decanter
49	Vent from 900-E-1 Condenser to 1500-V-1 Scrubber
50	Solvent from 900-V-1 Decanter to 1400-T-1 Still Feed Tank
51	Water from 900-V-1 Decanter to 1100-T-1 Water Surge
52	Vapor from 1100-ME-2 Dryer to 1100-T-1 Water Surge
53	Product Coal from 900-ME-1 Dryer to Storage and Shipping
54	Solvent from Unloading to 1400-T-4 Solvent Storage and to 1400-T-2 Recovered Solvent Storage
55a,(b)	Water Makeup to (or Waste from) 1100-T-1 Water Surge
56	Sulfuric Acid from Unloading to 1100-T-2 Storage and to 100-V-1 Mixer
57	Reflux to 1400-V-1 Still from Stream #58
58	Distilled Solvent from 1400-E-3 Condenser to 1400-V-2 Accumulator and to Stream #57 and to 1400-E-4 Cooler
60	Cooling Water Supply to 200-E-1 Cooler
61	Cooling Water Return from 200-E-1 Cooler
62	Cooling Water Supply to 1400-E-4 Cooler
63	Cooling Water Return from 1400-E-4 Cooler

STREAM NUMBER	DESCRIPTION
64	Cooling Water Supply to 1400-E-3 Condenser
65	Cooling Water Return from 1400-E-3 Condenser
66	Cooling Water Supply to 900-E-1 Condenser
67	Cooling Water Return from 900-E-1 Condenser
68	Cooling Water Supply to 1100-E-5 Condenser
69	Cooling Water Return from 1100-E-5 Condenser
70	Cooling Water Supply to 1100-E-2 Cooler
71	Cooling Water Return from 1100-E-2 Cooler
72	Solvent from Stream #34 to 1400-E-2 Interchanger
73	Solvent from Stream #34 to Stream #37
74	Solvent from 1400-E-2 Interchanger to 1400-V-1 Still
75	Vapor from 1400-V-1 Still to 1400-E-2 Interchanger
76	Condensate from 1400-E-2 Interchanger to 1400-E-3 Condenser
77*	50% NaOH to 1500-V-2 Surge-Decanter
78*	Process Water to 1500-V-2 Surge-Decanter
79*	Recovered Naphtha from 1500-P-2 to 1400-T-1
80*	Scrubber Liquor from 1500-V-2 to 1500-P-1
81*	Waste Sulfates and Caustic from 1500-P-1
82*	Scrubber Liquor from 1500-P-1 to 1500-E-1
83*	Scrubber Liquor from 1500-E-1 to 1500-V-1
84*	Vent from 1500-V-1 to Adsorption Unit
85*	Vent from Adsorption Unit
86*	Recovered Naphtha and Water to 900-V-1
88	Cooling Water Supply to 1500-E-1
89	Cooling Water Return from 1500-E-1
90	Steam to 1400-V-1 Still Jacket
91	Condensate from 1400-V-1 Still Jacket

*Streams marked with an asterisk require further data to quantify.

STREAM NUMBER	DESCRIPTION
92	Steam to 1400-E-1 Reboiler
93	Condensate from 1400-E-1 Reboiler
94	Steam to 900-ME-1 Dryer
95	Condensate from 900-ME-1 Dryer
96	Steam to 1100-E-1 Heater
97	Condensate from 1100-E-1 Heater
98	Steam (125 psi) to Train
100	Steam (400 psi) to 1100-ME-2 Dryer
101	Condensate from 1100-ME-2 Dryer
105	From Stream #5 to Stream #7
114	Sulfates from Stream #40 to 100-V-1 Mixer
118	From Stream #123 to 1100-V-2 Reslurry Tank
119	Water from 1100-P-3A&B to 1100-V-2 Reslurry Tank
120	Sulfates from 1100-E-1 Heater to 1100-V-1 Concentrator
121	Sulfates from 1100-E-2 Cooler to 1100-F-2 Filter
122	Sulfates Waste from 1100-F-2 to Line #22
123	Filtrate from 1100-F-2 to Streams #24 and #118
124	Sulfates Waste from 1100-ME-2 Dryer to Stream #22
145	Dummy Stream (Internal in 800-F-1A-D)
146*	Water from Stream #147 to 1100-ME-1
147*	Water from 1100-P-3A&B to Streams #12, #47, #119, and #146 See the first three of these for the net amount.
201*	Vent from 500-V-1 to 1500-V-1 Scrubber
202*	Vent from 600-V-1 to 1500-V-1 Scrubber

*Streams marked with an asterisk require further data to quantify.

STREAM NUMBER	DESCRIPTION
203*	Vent from 700-V-1 to 1500-V-1 Scrubber
204*	Vent from 800-V-1 to 1500-V-1 Scrubber
205*	Vent from 900-V-1 to 1500-V-1 Scrubber
206*	Vent from 1400-V-2 to 1500-V-1 Scrubber
207*	Vent from 1400-T-1 to 1500-V-1 Scrubber
208*	Vent from 1400-T-2 to 1500-V-1 Scrubber
209*	Vent from 1400-T-3 to 1500-V-1 Scrubber
210*	Vent from 1400-T-4 to 1500-V-1 Scrubber
211*	Vent from 1100-V-2 to 1500-V-1 Scrubber
212*	Vent from 1100-E-5 to 1500-V-1 Scrubber

*Streams marked with an asterisk require further data to quantify.

10.5.2 Computer Printout for Material and Energy Balance

UNIT OPERATIONS SIMULATOR

COAL-PYRITIC SULFUR REMOVAL

STREAM NUMBER 1 PULVERIZED COAL TO 100-V-1 MIXER

COMPONENT NO.	MOLES/HR	MOLE FRACTION	LBS/HR	WGT FRACTION	TONS/HR
1 COAL	17461.5312	0.921382546	226999.875	0.84797907	113.4999
2 FES2	135.8700	0.007169373	16301.6797	0.06089644	8.1508
7 H20	1354.0500	0.071448326	24393.6641	0.09112477	12.1968
TOTALS	18951.4453		267695.125		133.8476

TEMPERATURE	70.0000	DEG F (21.1111 DEG. C)
PRESSURE	14.7000	PSIA.
HEAT CONTENT	3.3920	MMBTU/HR
FRACTION VAPOR	0.0	
AVG. MOLECULAR WEIGHT	14.13	LBS/MOLE

STREAM NUMBER 2 FILTRATE (SULFATES) FROM 400-F-1A-D TO STREAM #4

COMPONENT NO.	MOLES/HR	MOLE FRACTION	LBS/HR	WGT FRACTION	TONS/HR
1 COAL	0.0039	0.000000189	0.0508	0.00000011	0.0000
3 SULFUR	0.0000	0.000000001	0.0005	0.00000000	0.0000
4 FESO4	79.4144	0.003839354	12063.2773	0.02698705	6.0316
5 FE2(SO4)3	158.5822	0.007666789	63411.0078	0.14185828	31.7055
6 H2SO4	39.7344	0.001920993	3897.1504	0.00871841	1.9486
7 H20	20406.5625	0.986572504	367631.000	0.82243621	183.8155
TOTALS	20684.3008		447002.437		223.5012

TEMPERATURE	215.2102	DEG F (101.7834 DEG. C)
PRESSURE	35.0000	PSIA.
HEAT CONTENT	69.9049	MMBTU/HR
FRACTION VAPOR	0.0	
AVG. MOLECULAR WEIGHT	21.61	LBS/MOLE

STREAM NUMBER 3 VENT FROM 100-V-1 TO 1500-V-1 SCRUBBER

COMPONENT NO.	MOLES/HR	MOLE FRACTION	LBS/HR	WGT FRACTION	TONS/HR
TOTALS	0.0		0.0		0.0

TEMPERATURE	212.1000	DEG F	(100.0555 DEG. C)
PRESSURE	14.7000	PSIA.	
HEAT CONTENT	0.0	MMBTU/HR	
FRACTION VAPOR	0.0		
AVG. MOLECULAR WEIGHT	0.0	LBS/MOLE	

STREAM NUMBER 4 SULFATES RETURN TO 100-V-1 MIXER

COMPONENT NO.	MOLES/HR	MOLE FRACTION	LBS/HR	WGT FRACTION	TONS/HR
4 FESO4	87.3239	0.003545144	13264.7578	0.02524501	6.6324
5 FE2(SO4)3	174.2880	0.007075679	69691.1250	0.13263363	34.8456
6 H2SO4	43.0247	0.001746703	4219.8633	0.00803109	2.1099
7 H2O	24327.3398	0.987632573	438265.125	0.83409035	219.1326
TOTALS	24631.9727		525440.812		262.7202

TEMPERATURE	207.7197	DEG F	(97.6221 DEG. C)
PRESSURE	35.0000	PSIA.	
HEAT CONTENT	79.6794	MMBTU/HR	
FRACTION VAPOR	0.0		
AVG. MOLECULAR WEIGHT	21.33	LBS/MOLE	

STREAM NUMBER 5 SLURRY FROM 100-V-1 TO STREAMS #16 AND #105

COMPONENT NO.	MOLES/HR	MOLE FRACTION	LBS/HR	WGT FRACTION	TONS/HR
1 COAL	17461.5312	0.392147899	226999.875	0.28081745	113.4999
2 FES2	117.0400	0.002628463	14042.4570	0.01737167	7.0212
3 SULFUR	15.0640	0.000338305	482.9517	0.00059745	0.2415
4 FESO4	279.3899	0.006274484	42440.1602	0.05250195	21.2201
5 FE2(SO4)3	87.6700	0.001968877	35055.9023	0.04336702	17.5279
6 H2SO4	133.8300	0.003005530	13126.0430	0.01623799	6.5630
7 H2O	26433.4062	0.593636632	476206.625	0.58910662	238.1033
TOTALS	44527.9219		808353.875		404.1768

TEMPERATURE	215.6000	DEG F (102.0000 DEG. C)
PRESSURE	154.7000	PSIA.
HEAT CONTENT	102.4605	MMBTU/HR
FRACTION VAPOR	0.0	
AVG. MOLECULAR WEIGHT	18.15	LBS/MOLE

STREAM NUMBER 6 OXYGEN TO REACTORS 200-R-1A-K

COMPONENT NO.	MOLES/HR	MOLE FRACTION	LBS/HR	WGT FRACTION	TONS/HR
9 OXYGEN	309.8101	0.995022416	9913.5469	0.99455744	4.9568
10 INERT	1.5500	0.004978161	54.2500	0.00544253	0.0271
TOTALS	311.3599		9967.7969		4.9839

TEMPERATURE	70.0000	DEG F (21.1111 DEG. C)
PRESSURE	154.7000	PSIA.
HEAT CONTENT	0.0733	MMBTU/HR
FRACTION VAPOR	1.0000	
AVG. MOLECULAR WEIGHT	32.01	LBS/MOLE

STREAM NUMBER 7 SLURRY FROM STREAMS 23 AND 105 TO REACTORS 200-R-1A-K

COMPONENT NO.		MOLES/HR	MOLE FRACTION	LBS/HR	WGT FRACTION	TONS/HR
1	COAL	17461.5273	0.431887388	226999.812	0.31741005	113.4999
2	FES2	117.0400	0.002894826	14042.4531	0.01963533	7.0212
3	SULFUR	15.0640	0.000372588	482.9517	0.00067530	0.2415
4	FESO4	200.2999	0.004954148	30426.1523	0.04254438	15.2131
5	FE2(SO4)3	64.7602	0.001601757	25895.1602	0.03620877	12.9476
6	H2SO4	133.3035	0.003297082	13074.4023	0.01828172	6.5372
7	H2O	22438.7617	0.554992616	404241.750	0.56524456	202.1209
	TOTALS	40430.7383		715162.562		357.5813

TEMPERATURE	215.6034	DEG F	(102.0019 DEG. C)
PRESSURE	154.7000	PSIA.	
HEAT CONTENT	88.6385	MMBTU/HR	
FRACTION VAPOR	0.0		
AVG. MOLECULAR WEIGHT	17.69	LBS/MOLE	

STREAM NUMBER 8 VENT FROM REACTORS 200-R-1A-K TO 1500-V-1 SCRUBBER

COMPONENT NO.		MOLES/HR	MOLE FRACTION	LBS/HR	WGT FRACTION	TONS/HR
7	H2O	11.5900	0.882039547	208.7977	0.79376400	0.1044
10	INERT	1.5500	0.117960393	54.2500	0.20623642	0.0271
	TOTALS	13.1400		263.0476		0.1315

TEMPERATURE	306.1399	DEG F	(152.2999 DEG. C)
PRESSURE	14.7000	PSIA.	
HEAT CONTENT	0.2492	MMBTU/HR	
FRACTION VAPOR	1.0000		
AVG. MOLECULAR WEIGHT	20.02	LBS/MOLE	

STREAM NUMBER 9 LEACHED COAL SLURRY FROM REACTORS TO 200-E-1 COOLER

COMPONENT NO.		MOLES/HR	MOLE FRACTION	LBS/HR	WGT FRACTION	TONS/HR
1	COAL	17461.5312	0.432273448	226999.875	0.31339300	113.4999
2	FES2	6.5900	0.000163140	790.6680	0.00109159	0.3953
3	SULFUR	103.4200	0.002560241	3315.6448	0.00457753	1.6578
4	FESO4	87.6260	0.002169248	13310.6523	0.01837651	6.6553
5	FE2(SO4)3	174.9800	0.004331760	69967.8125	0.09659660	34.9839
6	H2SO4	43.8430	0.001085368	4300.1250	0.00593669	2.1501
7	H2O	22516.6562	0.557416975	405645.062	0.56002814	202.8225
	TOTALS	40394.6367		724329.750		362.1648

TEMPERATURE	304.9102	DEG F	(151.6167 DEG. C)
PRESSURE	80.0000	PSIA.	
HEAT CONTENT	132.9398	MMBTU/HR	
FRACTION VAPOR	0.0		
AVG. MOLECULAR WEIGHT	17.93	LBS/MOLE	

STREAM NUMBER 10 LEACHED COAL SLURRY FROM COOLER 200-E-1 TO FILTER 400-F-1A-D

COMPONENT NO.		MOLES/HR	MOLE FRACTION	LBS/HR	WGT FRACTION	TONS/HR
1	COAL	17461.5312	0.432273448	226999.875	0.31339300	113.4999
2	FES2	6.5900	0.000163140	790.6680	0.00109159	0.3953
3	SULFUR	103.4200	0.002560241	3315.6448	0.00457753	1.6578
4	FESO4	87.6260	0.002169248	13310.6523	0.01837651	6.6553
5	FE2(SO4)3	174.9800	0.004331760	69967.8125	0.09659660	34.9839
6	H2SO4	43.8430	0.001085368	4300.1250	0.00593669	2.1501
7	H2O	22516.6562	0.557416975	405645.062	0.56002814	202.8225
	TOTALS	40394.6367		724329.750		362.1648

TEMPERATURE	215.6655	DEG F	(102.0364 DEG. C)
PRESSURE	80.0000	PSIA.	
HEAT CONTENT	89.0054	MMBTU/HR	
FRACTION VAPOR	0.0		
AVG. MOLECULAR WEIGHT	17.93	LBS/MOLE	

STREAM NUMBER 11 STEAM FROM LINE #24 TO 100-V-1 MIXER

COMPONENT NO.	MOLES/HR	MOLE FRACTION	LBS/HR	WGT FRACTION	TONS/HR
6 H2SO4	0.4213	0.000499811	41.3162	0.00271506	0.0207
7 H2O	842.3984	0.999500275	15176.0898	0.99728513	7.5880
TOTALS	842.8196		15217.4023		7.6087

TEMPERATURE	290.0000	DEG F	(143.3333 DEG. C)
PRESSURE	35.0000	PSIA.	
HEAT CONTENT	17.8643	MMBTU/HR	
FRACTION VAPOR	0.9992		
AVG. MOLECULAR WEIGHT	18.06	LBS/MOLE	

STREAM NUMBER 12 WATER FROM 1100-P-3-A&B TO STREAM #4 (STARTUP ONLY)

COMPONENT NO.	MOLES/HR	MOLE FRACTION	LBS/HR	WGT FRACTION	TONS/HR
TOTALS	0.0		0.0		0.0

TEMPERATURE	77.0000	DEG F	(25.0000 DEG. C)
PRESSURE	14.7000	PSIA.	
HEAT CONTENT	0.0	MMBTU/HR	
FRACTION VAPOR	0.0		
AVG. MOLECULAR WEIGHT	0.0	LBS/MOLE	

STREAM NUMBER 14 SULFATES FROM STREAM #40 TO 100-V-1 MIXER

COMPONENT NO.		MOLES/HR	MOLE FRACTION	LBS/HR	WGT FRACTION	TONS/HR
4	FESO4	0.7877	0.000373931	119.6576	0.00308574	0.0598
5	FE2(SO4)3	1.5730	0.000746700	628.9832	0.01622026	0.3145
6	H2SO4	1.5033	0.000713596	147.4400	0.00380219	0.0737
7	H2O	2102.7383	0.998165846	37881.5312	0.97689182	18.9408
	TOTALS	2106.6021		38777.6094		19.3888

TEMPERATURE	173.5363	DEG F	(78.6312 DEG. C)
PRESSURE	54.7000	PSIA.	
HEAT CONTENT	5.3840	MMBTU/HR	
FRACTION VAPOR	0.0		
AVG. MOLECULAR WEIGHT	18.41	LBS/MOLE	

STREAM NUMBER 15 COAL FILTER CAKE FROM 400-F-1A-D TO 500-V-1 EXTRACTOR

COMPONENT NO.		MOLES/HR	MOLE FRACTION	LBS/HR	WGT FRACTION	TONS/HR
1	COAL	17461.5273	0.885907114	226999.812	0.81852722	113.4999
2	FES2	6.5900	0.000334342	790.6677	0.00285103	0.3953
3	SULFUR	103.4200	0.005246989	3315.6443	0.01195572	1.6578
4	FESO4	8.2116	0.000416616	1247.3740	0.00449784	0.6237
5	FE2(SO4)3	16.3978	0.000831938	6556.8477	0.02364301	3.2784
6	H2SO4	4.1086	0.000208451	402.9751	0.00145307	0.2015
7	H2O	2110.0916	0.107055068	38014.0039	0.13707274	19.0070
	TOTALS	19710.3359		277327.125		138.6636

TEMPERATURE	215.2102	DEG F	(101.7834 DEG. C)
PRESSURE	14.7000	PSIA.	
HEAT CONTENT	18.8784	MMBTU/HR	
FRACTION VAPOR	0.0		
AVG. MOLECULAR WEIGHT	14.07	LBS/MOLE	

STREAM NUMBER 16 SLURRY FROM STREAM #5 TO 1100-F-1A&B FILTERS

COMPONENT NO.		MOLES/HR	MOLE FRACTION	LBS/HR	WGT FRACTION	TONS/HR
1	COAL	5479.4297	0.392148018	71232.5625	0.28081757	35.6163
2	FES2	36.7272	0.002628464	4406.5234	0.01737168	2.2033
3	SULFUR	4.7271	0.000338305	151.5503	0.00059745	0.0758
4	FESO4	87.6725	0.006274488	13317.7227	0.05250198	6.6589
5	FE2(SO4)3	27.5108	0.001968877	11000.5430	0.04336705	5.5003
6	H2SO4	41.9959	0.003005531	4118.9531	0.01623800	2.0595
7	H2O	8294.8047	0.593636870	149433.625	0.58910686	74.7168
	TOTALS	13972.8594		253661.312		126.8307

TEMPERATURE	215.6000	DEG F	(102.0000 DEG. C)
PRESSURE	154.7000	PSIA.	
HEAT CONTENT	32.1521	MMBTU/HR	
FRACTION VAPOR	0.0		
AVG. MOLECULAR WEIGHT	18.15	LBS/MOLE	

STREAM NUMBER 17 STEAM FROM STREAM #25 TO 1100-V-2 RESLURRY TANK

COMPONENT NO.	MOLES/HR	MOLE FRACTION	LBS/HR	WGT FRACTION	TONS/HR
6 H2SO4	0.1831	0.000499814	17.9542	0.00271508	0.0090
7 H2O	366.0676	0.999500692	6594.8281	0.99728507	3.2974
TOTALS	366.2505		6612.7812		3.3064

TEMPERATURE	290.0000	DEG F (143.3333 DEG. C)
PRESSURE	35.0000	PSIA.
HEAT CONTENT	7.7626	MMBTU/HR
FRACTION VAPOR	0.9992	
AVG. MOLECULAR WEIGHT	18.06	LBS/MOLE

STREAM NUMBER 18 COAL FILTER CAKE FROM 1100-F-1A&B FILTERS TO 1100-V-2 RESLURRY TANK

COMPONENT NO.	MOLES/HR	MOLE FRACTION	LBS/HR	WGT FRACTION	TONS/HR
1 COAL	5479.4258	0.877951503	71232.5000	0.78321797	35.6162
2 FES2	36.7271	0.005884673	4406.5195	0.04845071	2.2033
3 SULFUR	4.7271	0.000757406	151.5502	0.00166633	0.0758
4 FESO4	7.4714	0.001197125	1134.9329	0.01247885	0.5675
5 FE2(SO4)3	2.3445	0.000375647	937.4634	0.01030763	0.4687
6 H2SO4	3.5789	0.000573432	351.0159	0.00385950	0.1755
7 H2O	706.8806	0.113261282	12734.6875	0.14002085	6.3673
TOTALS	6241.1484		90948.5000		45.4743

TEMPERATURE	215.6000	DEG F (102.0000 DEG. C)
PRESSURE	154.7000	PSIA.
HEAT CONTENT	6.1547	MMBTU/HR
FRACTION VAPOR	0.0	
AVG. MOLECULAR WEIGHT	14.57	LBS/MOLE

STREAM NUMBER 19 SULFATES FROM 1100-F-1-A&B FILTERS TO 1100-V-1 CONCENTRATOR

COMPONENT NO.		MOLES/HR	MOLE FRACTION	LBS/HR	WGT FRACTION	TONS/HR
1	COAL	0.0039	0.000000505	0.0508	0.00000031	0.0000
2	FES2	0.0000	0.000000002	0.0018	0.00000001	0.0000
4	FESO4	80.2011	0.010373008	12182.7891	0.07487297	6.0914
5	FE2(SO4)3	25.1664	0.003254956	10063.0781	0.06184566	5.0315
6	H2SO4	38.4170	0.004968751	3767.9370	0.02315699	1.8840
7	H2O	7587.9219	0.981402636	136698.937	0.84012431	68.3495
	TOTALS	7731.7109		162712.750		81.3564

TEMPERATURE	215.6000	DEG F	(102.0000 DEG. C)
PRESSURE	54.7000	PSIA.	
HEAT CONTENT	25.9974	MMBTU/HR	
FRACTION VAPOR	0.0		
AVG. MOLECULAR WEIGHT	21.04	LBS/MOLE	

STREAM NUMBER 20 SULFATES FROM 1100-V-1 CONCENTRATOR TO 1100-E-1 REBOILER

COMPONENT NO.		MOLES/HR	MOLE FRACTION	LBS/HR	WGT FRACTION	TONS/HR
1	COAL	0.0391	0.000003949	0.5078	0.00000124	0.0003
2	FES2	0.0002	0.000000015	0.0183	0.00000004	0.0000
4	FESO4	802.0110	0.081078351	121827.812	0.29732925	60.9139
5	FE2(SO4)3	251.6638	0.025441665	100630.812	0.24559647	50.3154
6	H2SO4	350.4695	0.035430312	34374.0469	0.08389223	17.1870
7	H2O	8487.6172	0.858045995	152907.250	0.37318081	76.4536
	TOTALS	9891.7969		409740.375		204.8702

TEMPERATURE	290.0000	DEG F	(143.3333 DEG. C)
PRESSURE	50.0000	PSIA.	
HEAT CONTENT	51.8622	MMBTU/HR	
FRACTION VAPOR	0.0		
AVG. MOLECULAR WEIGHT	41.42	LBS/MOLE	

STREAM NUMBER 21 SULFATES FROM 1100-V-1 CONCENTRATOR TO 1100-E-2 COOLER

COMPONENT NO.		MOLES/HR	MOLE FRACTION	LBS/HR	WGT FRACTION	TONS/HR
1	COAL	0.0039	0.000003949	0.0508	0.00000124	0.0000
2	FES2	0.0000	0.000000015	0.0018	0.00000004	0.0000
4	FESO4	80.2011	0.081078053	12182.7891	0.29732937	6.0914
5	FE2(SO4)3	25.1664	0.025441565	10063.0781	0.24559635	5.0315
6	H2SO4	35.0470	0.035430193	3437.4065	0.08389223	1.7187
7	H2O	848.7617	0.858042598	15290.7266	0.37318069	7.6454
	TOTALS	989.1836		40974.0508		20.4870

TEMPERATURE	290.0000	DEG F	(143.3333 DEG. C)
PRESSURE	50.0000	PSIA.	
HEAT CONTENT	5.1862	MMBTU/HR	
FRACTION VAPOR	0.0		
AVG. MOLECULAR WEIGHT	41.42	LBS/MOLE	

STREAM NUMBER 22 IRON SULFATES WASTE FROM 1100-F-2 & 1100-ME-2 DRYER

COMPONENT NO.		MOLES/HR	MOLE FRACTION	LBS/HR	WGT FRACTION	TONS/HR
1	COAL	0.0035	0.000006603	0.0457	0.00000145	0.0000
2	FES2	0.0000	0.000000026	0.0016	0.00000005	0.0000
4	FESO4	79.0900	0.148544073	12014.0039	0.38149339	6.0070
5	FE2(SO4)3	27.9097	0.043028299	9160.7344	0.29089051	4.5804
6	H2SO4	37.0104	0.060120765	3139.5762	0.09969425	1.5698
7	H2O	398.4204	0.748299599	7177.6758	0.22792029	3.5888
	TOTALS	532.4343		31492.0352		15.7460

TEMPERATURE	77.0000	DEG F	(25.0000 DEG. C)
PRESSURE	14.7000	PSIA.	
HEAT CONTENT	0.0	MMBTU/HR	
FRACTION VAPOR	0.0		
AVG. MOLECULAR WEIGHT	59.15	LBS/MOLE	

STREAM NUMBER 23 SLURRY FROM 1100-V-2 RESLURRY TANK TO STREAM #105

COMPONENT NO.		MOLES/HR	MOLE FRACTION	LBS/HR	WGT FRACTION	TONS/HR
1	COAL	5479.4258	0.554840147	71232.5000	0.44389898	35.6162
2	FES2	36.7271	0.003718947	4406.5195	0.02746007	2.2033
3	SULFUR	4.7271	0.000478659	151.5502	0.00094441	0.0758
4	FESO4	8.5825	0.000869059	1303.7146	0.00812435	0.6519
5	FE2(SO4)3	4.6011	0.000465901	1839.8010	0.01146507	0.9199
6	H2SO4	41.4693	0.004199136	4067.3132	0.02534624	2.0337
7	H2O	4300.1602	0.435429096	77468.8125	0.48276174	38.7344
	TOTALS	9875.6836		160470.062		80.2350

TEMPERATURE	215.6000	DEG F (102.0000 DEG. C)
PRESSURE	14.7000	PSIA.
HEAT CONTENT	18.3284	MMBTU/HR
FRACTION VAPOR	0.0	
AVG. MOLECULAR WEIGHT	16.25	LBS/MOLE

STREAM NUMBER 24 SULFATES FROM STREAM #123 TO 1100-ME-2 DRYER

COMPONENT NO.		MOLES/HR	MOLE FRACTION	LBS/HR	WGT FRACTION	TONS/HR
1	COAL	0.0035	0.000005632	0.0457	0.00000205	0.0000
2	FES2	0.0000	0.000000022	0.0016	0.00000007	0.0000
4	FESO4	10.0042	0.016024716	1519.6626	0.06802940	0.7598
5	FE2(SO4)3	20.3179	0.032545280	8124.3516	0.36369604	4.0622
6	H2SO4	24.9008	0.039886143	2442.2661	0.10933083	1.2211
7	H2O	569.0696	0.911538184	10251.9766	0.45894164	5.1260
	TOTALS	624.2959		22338.3008		11.1692

TEMPERATURE	215.0000	DEG F (101.6666 DEG. C)
PRESSURE	14.7000	PSIA.
HEAT CONTENT	2.3261	MMBTU/HR
FRACTION VAPOR	0.0	
AVG. MOLECULAR WEIGHT	35.78	LBS/MOLE

STREAM NUMBER 25 STEAM FROM 1100-V-1 CONCENTRATOR

COMPONENT NO.	MOLES/HR	MOLE FRACTION	LBS/HR	WGT FRACTION	TONS/HR
6 H2SO4	3.3700	0.000499812	330.5295	0.00271507	0.1653
7 H2O	6739.1602	0.999500573	121408.187	0.99728513	60.7041
TOTALS	6742.5273		121738.687		60.8693

TEMPERATURE	290.0000	DEG F	(143.3333 DEG. C)
PRESSURE	35.0000	PSIA.	
HEAT CONTENT	142.9143	MMBTU/HR	
FRACTION VAPOR	0.9992		
AVG. MOLECULAR WEIGHT	18.06	LBS/MOLE	

STREAM NUMBER 26 STEAM FROM LINE #25 TO 1100-ME-1 WATER HEATER

COMPONENT NO.	MOLES/HR	MOLE FRACTION	LBS/HR	WGT FRACTION	TONS/HR
6 H2SO4	2.7657	0.000499813	271.2590	0.00271507	0.1356
7 H2O	5530.6914	0.999500871	99637.2500	0.99728501	49.8186
TOTALS	5533.4531		99908.5000		49.9542

TEMPERATURE	290.0000	DEG F	(143.3333 DEG. C)
PRESSURE	35.0000	PSIA.	
HEAT CONTENT	117.2868	MMBTU/HR	
FRACTION VAPOR	0.9992		
AVG. MOLECULAR WEIGHT	18.06	LBS/MOLE	

STREAM NUMBER 27 EXTRACTED COAL SLURRY FROM 500-V-1 EXTRACTOR TO 600-F-1A-D FILTERS

COMPONENT NO.		MOLES/HR	MOLE FRACTION	LBS/HR	WGT FRACTION	TONS/HR
1	COAL	17461.5273	0.765998840	226999.812	0.40757906	113.4999
2	FES2	6.5900	0.000289089	790.6677	0.00141965	0.3953
3	SULFUR	206.8400	0.009073611	6631.2852	0.01190650	3.3156
4	FESO4	8.2116	0.000360227	1247.3740	0.00223967	0.6237
5	FE2(SO4)3	16.3978	0.000719334	6556.8477	0.01177284	3.2784
6	H2SO4	4.1086	0.000180237	402.9751	0.00072354	0.2015
7	H2O	2110.0916	0.092565060	38014.0039	0.06825429	19.0070
8	SOLVENT	2982.0078	0.130814075	276303.875	0.49610472	138.1519
	TOTALS	22795.7617		556946.625		278.4731

TEMPERATURE	162.0000	DEG F (72.2222 DEG. C)
PRESSURE	54.7000	PSIA.
HEAT CONTENT	34.3561	MMBTU/HR
FRACTION VAPOR	0.0	
AVG. MOLECULAR WEIGHT	24.43	LBS/MOLE

STREAM NUMBER 28 WATER FROM 1100-ME-1 HEATER TO 1100-T-1 WATER SURGE

COMPONENT NO.		MOLES/HR	MOLE FRACTION	LBS/HR	WGT FRACTION	TONS/HR
6	H2SO4	5.5314	0.000424311	542.5181	0.00230571	0.2713
7	H2O	13030.6133	0.999575973	234750.812	0.99769431	117.3754
	TOTALS	13036.1406		235293.312		117.6467

TEMPERATURE	212.0402	DEG F (100.0223 DEG. C)
PRESSURE	14.7000	PSIA.
HEAT CONTENT	141.0213	MMBTU/HR
FRACTION VAPOR	0.4330	
AVG. MOLECULAR WEIGHT	18.05	LBS/MOLE

STREAM NUMBER 29 WASHED COAL FILTER CAKE FROM 600-F-1A-D FILTERS TO 700-V-1 WATER WASH TANK

COMPONENT NO.		MOLES/HR	MOLE FRACTION	LBS/HR	WGT FRACTION	TONS/HR
1	COAL	17461.5234	0.959134698	226999.750	0.83044136	113.4999
2	FES2	6.5900	0.000361978	790.6675	0.00289253	0.3953
3	SULFUR	28.6284	0.001572513	917.8259	0.00335772	0.4589
4	FESO4	1.1366	0.000062430	172.6472	0.00063160	0.0863
5	FE2(SO4)3	2.2696	0.000124665	907.5234	0.00332003	0.4538
6	H2SO4	0.5687	0.000031236	55.7752	0.00020404	0.0279
7	H2O	292.0547	0.016042113	5261.4609	0.01924819	2.6307
8	SOLVENT	412.7354	0.022670917	38242.8164	0.13990504	19.1214
	TOTALS	18205.4961		273348.312		136.6742

TEMPERATURE	161.3279	DEG F (71.8488 DEG. C)
PRESSURE	14.7000	PSIA.
HEAT CONTENT	11.7441	MMBTU/HR
FRACTION VAPOR	0.0	
AVG. MOLECULAR WEIGHT	15.01	LBS/MOLE

STREAM NUMBER 30 FILTRATE FROM 600-F-1A-D FILTERS TO 600-V-1 DECANTER

COMPONENT NO.		MOLES/HR	MOLE FRACTION	LBS/HR	WGT FRACTION	TONS/HR
1	COAL	0.0039	0.000000851	0.0508	0.00000018	0.0000
3	SULFUR	178.2116	0.038823802	5713.4609	0.02014631	2.8567
4	FESO4	7.0751	0.001541324	1074.7268	0.00378961	0.5374
5	FE2(SO4)3	14.1282	0.003077859	5649.3242	0.01992016	2.8247
6	H2SO4	3.5400	0.000771190	347.2000	0.00122427	0.1736
7	H2O	1818.0369	0.396063507	32752.5430	0.11548918	16.3763
8	SOLVENT	2569.2725	0.559721947	238061.062	0.83943045	119.0305
	TOTALS	4590.2656		283598.312		141.7991

TEMPERATURE	161.3795	DEG F (71.8775 DEG. C)
PRESSURE	14.7000	PSIA.
HEAT CONTENT	22.4284	MMBTU/HR
FRACTION VAPOR	0.0	
AVG. MOLECULAR WEIGHT	61.78	LBS/MOLE

STREAM NUMBER 31 DISTILLED SOLVENT FROM 1400-T-2 SURGE TO STREAM #37

COMPONENT NO.	MOLES/HR	MOLE FRACTION	LBS/HR	WGT FRACTION	TONS/HR
8 SOLVENT	1465.5002	1.00000000	135788.812	1.00000000	67.8944
TOTALS	1465.5002		135788.812		67.8944

TEMPERATURE	93.2871	DEG F (34.0484 DEG. C)
PRESSURE	54.7000	PSIA.
HEAT CONTENT	4.4861	MMBTU/HR
FRACTION VAPOR	0.0	
AVG. MOLECULAR WEIGHT	92.66	LBS/MOLE

STREAM NUMBER 32 SULFATES FROM 600-V-1 DECANTER TO STREAM #4

COMPONENT NO.	MOLES/HR	MOLE FRACTION	LBS/HR	WGT FRACTION	TONS/HR
1 COAL	0.0039	0.000002120	0.0508	0.00000128	0.0000
4 FESO4	7.0751	0.003839352	1074.7268	0.02698702	0.5374
5 FE2(SO4)3	14.1282	0.007666770	5649.3242	0.14185780	2.8247
6 H2SO4	3.5400	0.001920991	347.2000	0.00871839	0.1736
7 H2O	1818.0369	0.986571968	32752.5430	0.82243550	16.3763
TOTALS	1842.7817		39823.8437		19.9119

TEMPERATURE	161.3795	DEG F (71.8775 DEG. C)
PRESSURE	54.7000	PSIA.
HEAT CONTENT	4.3921	MMBTU/HR
FRACTION VAPOR	0.0	
AVG. MOLECULAR WEIGHT	21.61	LBS/MOLE

STREAM NUMBER 33 SOLVENT FROM 800-V-1 DECANTER TO 1400-T-1 STILL FEED TANK

COMPONENT NO.	MOLES/HR	MOLE FRACTION	LBS/HR	WGT FRACTION	TONS/HR
3 SULFUR	26.6792	0.064863443	855.3350	0.02343745	0.4277
8 SOLVENT	384.6340	0.935136497	35639.0312	0.97656262	17.8195
TOTALS	411.3132		36494.3633		18.2472

TEMPERATURE	173.5363	DEG F	(78.6312 DEG. C)
PRESSURE	14.7000	PSIA.	
HEAT CONTENT	2.9949	MMBTU/HR	
FRACTION VAPOR	0.0		
AVG. MOLECULAR WEIGHT	88.73	LBS/MOLE	

STREAM NUMBER 34 SOLVENT FROM 1400-T-1 FEED TANK TO STREAMS #72 & #73

COMPONENT NO.	MOLES/HR	MOLE FRACTION	LBS/HR	WGT FRACTION	TONS/HR
3 SULFUR	204.8908	0.064342856	6568.7969	0.02324109	3.2844
8 SOLVENT	2979.4670	0.935657144	276068.437	0.97675902	138.0342
TOTALS	3184.3577		282637.187		141.3186

TEMPERATURE	165.0525	DEG F	(73.9180 DEG. C)
PRESSURE	54.7000	PSIA.	
HEAT CONTENT	21.5978	MMBTU/HR	
FRACTION VAPOR	0.0		
AVG. MOLECULAR WEIGHT	88.76	LBS/MOLE	

STREAM NUMBER 35 SULFUR PRODUCT FROM 1400-V-1 STILL TO 1400-T-3 SULFUR STORAGE

COMPONENT NO.	MOLES/HR	MOLE FRACTION	LBS/HR	WGT FRACTION	TONS/HR
3 SULFUR	101.4748	1.00000000	3253.2815	1.00000000	1.6266
TOTALS	101.4748		3253.2815		1.6266

TEMPERATURE	266.0000	DEG F	(130.0000 DEG. C)
PRESSURE	14.7000	PSIA.	
HEAT CONTENT	0.2248	MMBTU/HR	
FRACTION VAPOR	0.0		
AVG. MOLECULAR WEIGHT	32.06	LBS/MOLE	

STREAM NUMBER 36 DISTILLED SOLVENT FROM 1400-E-4 COOLER TO 1400-T-2 SURGE

COMPONENT NO.	MOLES/HR	MOLE FRACTION	LBS/HR	WGT FRACTION	TONS/HR
8 SOLVENT	1462.9595	1.00000000	135553.375	1.00000000	67.7767
TOTALS	1462.9595		135553.375		67.7767

TEMPERATURE	93.3285	DEG F	(34.0714 DEG. C)
PRESSURE	14.7000	PSIA.	
HEAT CONTENT	4.4815	MMBTU/HR	
FRACTION VAPOR	0.0		
AVG. MOLECULAR WEIGHT	92.66	LBS/MOLE	

STREAM NUMBER 37 SOLVENT FROM STREAMS #31 AND #73 TO 500-V-1 EXTRACTOR

COMPONENT NO.	MOLES/HR	MOLE FRACTION	LBS/HR	WGT FRACTION	TONS/HR
3 SULFUR	103.4200	0.033518847	3315.6443	0.01185770	1.6578
8 SOLVENT	2982.0078	0.966481149	276303.875	0.98814231	138.1519
TOTALS	3085.4277		279619.500		139.8098

TEMPERATURE	131.2932	DEG F	(55.1629 DEG. C)
PRESSURE	54.7000	PSIA.	
HEAT CONTENT	15.4784	MMBTU/HR	
FRACTION VAPOR	0.0		
AVG. MOLECULAR WEIGHT	90.63	LBS/MOLE	

STREAM NUMBER 38 SOLVENT FROM 600-V-1 DECANTER TO 1400-T-1 STILL FEED TANK

COMPONENT NO.	MOLES/HR	MOLE FRACTION	LBS/HR	WGT FRACTION	TONS/HR
3 SULFUR	178.2116	0.064863503	5713.4609	0.02343748	2.8567
8 SOLVENT	2569.2725	0.935136497	238061.062	0.97656256	119.0305
TOTALS	2747.4839		243774.500		121.8872

TEMPERATURE	161.3795	DEG F	(71.8775 DEG. C)
PRESSURE	14.7000	PSIA.	
HEAT CONTENT	18.0363	MMBTU/HR	
FRACTION VAPOR	0.0		
AVG. MOLECULAR WEIGHT	88.73	LBS/MOLE	

STREAM NUMBER 39 WASHED COAL SLURRY FROM 700-V-1 WATER WASH TANK TO 800-F-1A-D FILTERS

COMPONENT NO.		MOLES/HR	MOLE FRACTION	LBS/HR	WGT FRACTION	TONS/HR
1	COAL	17461.5234	0.524972022	226999.750	0.41035569	113.4999
2	FES2	6.5900	0.000198125	790.6675	0.00142932	0.3953
3	SULFUR	31.9733	0.000961262	1025.0652	0.00185305	0.5125
4	FESO4	5.7214	0.000172012	869.1033	0.00157111	0.4346
5	FE2(SO4)3	11.4251	0.000343490	4568.4648	0.00825858	2.2842
6	H2SO4	10.9186	0.000328261	1070.8936	0.00193589	0.5354
7	H2O	15272.7187	0.459166706	275143.125	0.49738622	137.5715
8	SOLVENT	460.9595	0.013858516	42711.1172	0.07721043	21.3555
	TOTALS	33261.8164		553178.000		276.5889

TEMPERATURE	173.8569	DEG F	(78.8094 DEG. C)
PRESSURE	54.7000	PSIA.	
HEAT CONTENT	51.7248	MMBTU/HR	
FRACTION VAPOR	0.0		
AVG. MOLECULAR WEIGHT	16.63	LBS/MOLE	

STREAM NUMBER 40 WEAK SULFATES FROM 800-V-1 DECANTER TO STREAMS #14 AND #43

COMPONENT NO.		MOLES/HR	MOLE FRACTION	LBS/HR	WGT FRACTION	TONS/HR
4	FESO4	4.7741	0.000373931	725.1975	0.00308574	0.3626
5	FE2(SO4)3	9.5333	0.000746701	3812.0217	0.01622028	1.9060
6	H2SO4	9.1107	0.000713596	893.5757	0.00380219	0.4468
7	H2O	12743.8672	0.998166084	229585.000	0.97689193	114.7925
	TOTALS	12767.2812		235015.750		117.5079

TEMPERATURE	173.5363	DEG F	(78.6312 DEG. C)
PRESSURE	54.7000	PSIA.	
HEAT CONTENT	32.6305	MMBTU/HR	
FRACTION VAPOR	0.0		
AVG. MOLECULAR WEIGHT	18.41	LBS/MOLE	

STREAM NUMBER 41 WASH WATER FROM 800-F-1A-D FILTER TO STREAM #44

COMPONENT NO.	MOLES/HR	MOLE FRACTION	LBS/HR	WGT FRACTION	TONS/HR
3 SULFUR	3.3449	0.000760947	107.2385	0.00128286	0.0536
4 FESO4	0.5986	0.000136167	90.9223	0.00108767	0.0455
5 FE2(SO4)3	1.1953	0.000271911	477.9355	0.00571738	0.2390
6 H2SO4	2.7426	0.000623912	268.9900	0.00321784	0.1345
7 H2O	4339.6406	0.987236381	78180.0625	0.93524230	39.0900
8 SOLVENT	48.2239	0.010970574	4468.2773	0.05345253	2.2341
TOTALS	4395.7461		83593.3750		41.7967

TEMPERATURE	189.1000	DEG F	(87.2778 DEG. C)
PRESSURE	24.7000	PSIA.	
HEAT CONTENT	12.7349	MMBTU/HR	
FRACTION VAPOR	0.0		
AVG. MOLECULAR WEIGHT	19.02	LBS/MOLE	

STREAM NUMBER 42 FILTRATE FROM 800-F-1A-D FILTERS TO 800-V-1 DECANTER

COMPONENT NO.	MOLES/HR	MOLE FRACTION	LBS/HR	WGT FRACTION	TONS/HR
3 SULFUR	26.6792	0.002024434	855.3350	0.00315029	0.4277
4 FESO4	4.7741	0.000362260	725.1975	0.00267098	0.3626
5 FE2(SO4)3	9.5333	0.000723396	3812.0217	0.01404007	1.9060
6 H2SO4	9.1107	0.000691324	893.5757	0.00329113	0.4468
7 H2O	12743.8672	0.967012346	229585.000	0.84558541	114.7925
8 SOLVENT	384.6340	0.029186264	35639.0312	0.13126224	17.8195
TOTALS	13178.5977		271510.125		135.7551

TEMPERATURE	173.5540	DEG F	(78.6411 DEG. C)
PRESSURE	14.7000	PSIA.	
HEAT CONTENT	35.6301	MMBTU/HR	
FRACTION VAPOR	0.0		
AVG. MOLECULAR WEIGHT	20.60	LBS/MOLE	

STREAM NUMBER 43 FROM STREAM #40 TO STREAM #44

COMPONENT NO.	MOLES/HR	MOLE FRACTION	LBS/HR	WGT FRACTION	TONS/HR
4 FESO4	3.9864	0.000373931	605.5398	0.00308574	0.3028
5 FE2(SO4)3	7.9603	0.000746701	3183.0383	0.01622028	1.5915
6 H2SO4	7.6074	0.000713596	746.1357	0.00380219	0.3731
7 H2O	10641.1289	0.998166084	191703.500	0.97689188	95.8517
TOTALS	10660.6797		196238.187		98.1191

TEMPERATURE	173.5363	DEG F	(78.6312 DEG. C)
PRESSURE	24.7000	PSIA.	
HEAT CONTENT	27.2465	MMBTU/HR	
FRACTION VAPOR	0.0		
AVG. MOLECULAR WEIGHT	18.41	LBS/MOLE	

STREAM NUMBER 44 FROM STREAMS #41 AND #43 TO 700-V-1 WATER WASH TANK

COMPONENT NO.	MOLES/HR	MOLE FRACTION	LBS/HR	WGT FRACTION	TONS/HR
3 SULFUR	3.3449	0.000222160	107.2385	0.00038323	0.0536
4 FESO4	4.5849	0.000304515	696.4622	0.00248886	0.3482
5 FE2(SO4)3	9.1556	0.000608085	3660.9741	0.01308278	1.8305
6 H2SO4	10.3500	0.000687413	1015.1260	0.00362763	0.5076
7 H2O	14980.7695	0.994975150	269883.562	0.96445000	134.9418
8 SOLVENT	48.2239	0.003202876	4468.2773	0.01596774	2.2341
TOTALS	15056.4258		279831.562		139.9158

TEMPERATURE	178.1713	DEG F	(81.2062 DEG. C)
PRESSURE	24.7000	PSIA.	
HEAT CONTENT	39.9824	MMBTU/HR	
FRACTION VAPOR	0.0		
AVG. MOLECULAR WEIGHT	18.59	LBS/MOLE	

STREAM NUMBER 45 WASHED COAL FILTER CAKE FROM 800-F-1A-D TO 900-ME-1 DRYER

COMPONENT NO.		MOLES/HR	MOLE FRACTION	LBS/HR	WGT FRACTION	TONS/HR
1	COAL	17461.5234	0.871824443	226999.750	0.82123899	113.4999
2	FES2	6.5900	0.000329027	790.6675	0.00286047	0.3953
3	SULFUR	1.9492	0.000097320	62.4913	0.00022608	0.0312
4	FESO4	0.3488	0.000017415	52.9834	0.00019168	0.0265
5	FE2(SO4)3	0.6965	0.000034776	278.5083	0.00100759	0.1393
6	H2SO4	0.6656	0.000033234	65.2851	0.00023619	0.0326
7	H2O	2528.8494	0.126261175	45558.0664	0.16481978	22.7790
8	SOLVENT	28.1016	0.001403064	2603.8076	0.00942004	1.3019
	TOTALS	20028.7148		276411.312		138.2057

TEMPERATURE	189.1000	DEG F (87.2778 DEG. C)
PRESSURE	14.7000	PSIA.
HEAT CONTENT	17.3074	MMBTU/HR
FRACTION VAPOR	0.0	
AVG. MOLECULAR WEIGHT	13.80	LBS/MOLE

STREAM NUMBER 46 WATER AND SOLVENT VAPORS FROM 900-ME-1 DRYER TO 900-E-1 CONDENSER

COMPONENT NO.		MOLES/HR	MOLE FRACTION	LBS/HR	WGT FRACTION	TONS/HR
7	H2O	2023.0737	0.986299753	36446.3477	0.93332148	18.2232
8	SOLVENT	28.1016	0.013700232	2603.8076	0.06667852	1.3019
	TOTALS	2051.1753		39050.1523		19.5251

TEMPERATURE	212.1000	DEG F (100.0555 DEG. C)
PRESSURE	14.7000	PSIA.
HEAT CONTENT	42.5804	MMBTU/HR
FRACTION VAPOR	1.0000	
AVG. MOLECULAR WEIGHT	19.04	LBS/MOLE

STREAM NUMBER 47 WASH WATER FROM 1100-T-1 SURGE TO 800-F-1A-D FILTERS

COMPONENT NO.	MOLES/HR	MOLE FRACTION	LBS/HR	WGT FRACTION	TONS/HR
6 H2SO4	1.6003	0.000368627	156.9573	0.00200361	0.0785
7 H2O	4339.6445	0.999631941	78180.1250	0.99799663	39.0901
TOTALS	4341.2422		78337.0625		39.1685

TEMPERATURE	212.0028	DEG F (100.0015 DEG. C)
PRESSURE	54.7000	PSIA.
HEAT CONTENT	14.0914	MMBTU/HR
FRACTION VAPOR	0.0	
AVG. MOLECULAR WEIGHT	18.04	LBS/MOLE

STREAM NUMBER 48 CONDENSATE FROM 900-E-1 CONDENSER TO 900-V-1 DECANTER

COMPONENT NO.	MOLES/HR	MOLE FRACTION	LBS/HR	WGT FRACTION	TONS/HR
7 H2O	2009.7637	0.987441480	36206.5625	0.93860352	18.1033
8 SOLVENT	25.5606	0.012558479	2368.3662	0.06139652	1.1842
TOTALS	2035.3242		38574.9258		19.2874

TEMPERATURE	200.0000	DEG F (93.3333 DEG. C)
PRESSURE	14.7000	PSIA.
HEAT CONTENT	6.3258	MMBTU/HR
FRACTION VAPOR	0.0	
AVG. MOLECULAR WEIGHT	18.95	LBS/MOLE

STREAM NUMBER 49 VENT FROM 900-E-1 CONDENSER TO 1500-V-1 SCRUBBER

COMPONENT NO.	MOLES/HR	MOLE FRACTION	LBS/HR	WGT FRACTION	TONS/HR
7 H20	13.3100	0.839694619	239.7841	0.50456923	0.1199
8 SOLVENT	2.5410	0.160305321	235.4415	0.49543113	0.1177
TOTALS	15.8510		475.2253		0.2376

TEMPERATURE	212.1000	DEG F (100.0555 DEG. C)
PRESSURE	14.7000	PSIA.
HEAT CONTENT	0.3338	MMBTU/HR
FRACTION VAPOR	1.0000	
AVG. MOLECULAR WEIGHT	29.98	LBS/MOLE

STREAM NUMBER 50 SOLVENT FROM 900-V-1 DECANTER TO 1400-T-1 STILL FEED TANK

COMPONENT NO.	MOLES/HR	MOLE FRACTION	LBS/HR	WGT FRACTION	TONS/HR
8 SOLVENT	25.5606	1.00000000	2368.3662	1.00000000	1.1842
TOTALS	25.5606		2368.3662		1.1842

TEMPERATURE	200.0000	DEG F (93.3333 DEG. C)
PRESSURE	14.7000	PSIA.
HEAT CONTENT	0.5664	MMBTU/HR
FRACTION VAPOR	1.0000	
AVG. MOLECULAR WEIGHT	92.66	LBS/MOLE

STREAM NUMBER 51 WATER FROM 900-V-1 DECANTER TO 1100-T-1 WATER SURGE

COMPONENT NO.	MOLES/HR	MOLE FRACTION	LBS/HR	WGT FRACTION	TONS/HR
7 H2O	2009.7637	1.00000000	36206.5625	1.00000000	18.1033
TOTALS	2009.7637		36206.5625		18.1033

TEMPERATURE	200.0000	DEG F	(93.3333 DEG. C)
PRESSURE	14.7000	PSIA.	
HEAT CONTENT	6.0839	MMBTU/HR	
FRACTION VAPOR	0.0		
AVG. MOLECULAR WEIGHT	18.02	LBS/MOLE	

STREAM NUMBER 52 VAPOR FROM 1100-ME-2 DRYER TO 1100-T-1 WATER SURGE

COMPONENT NO.	MOLES/HR	MOLE FRACTION	LBS/HR	WGT FRACTION	TONS/HR
6 H2SO4	0.2710	0.000699511	26.5793	0.00379651	0.0133
7 H2O	387.1372	0.999301076	6974.4062	0.99620360	3.4872
TOTALS	387.4080		7000.9844		3.5005

TEMPERATURE	353.0200	DEG F	(178.3444 DEG. C)
PRESSURE	14.7000	PSIA.	
HEAT CONTENT	8.3318	MMBTU/HR	
FRACTION VAPOR	1.0000		
AVG. MOLECULAR WEIGHT	18.07	LBS/MOLE	

STREAM NUMBER 53 PRODUCT COAL FROM 900-ME-1 DRYER TO STORAGE

COMPONENT NO.		MOLES/HR	MOLE FRACTION	LBS/HR	WGT FRACTION	TONS/HR
1	COAL	17461.5234	0.971296608	226999.750	0.95634735	113.4999
2	FES2	6.5900	0.000366568	790.6675	0.00333107	0.3953
3	SULFUR	1.9492	0.000108424	62.4913	0.00026327	0.0312
4	FESO4	0.3488	0.000019402	52.9834	0.00022322	0.0265
5	FE2(SO4)3	0.6965	0.000038743	278.5083	0.00117335	0.1393
6	H2SO4	0.6656	0.000037026	65.2851	0.00027505	0.0326
7	H2O	505.7756	0.028133750	9111.7148	0.03838755	4.5559
	TOTALS	17977.5391		237361.187		118.6806

TEMPERATURE	160.0	DEG F	(71.1 DEG. C)
PRESSURE	14.7000	PSIA.	
HEAT CONTENT	12.9980	MMBTU/HR	
FRACTION VAPOR	0.0		
AVG. MOLECULAR WEIGHT	13.20	LBS/MOLE	

STREAM NUMBER 54 SOLVENT FROM UNLOADING TO 1400-T-4 SOLVENT STORAGE AND TO 1400-T-2 RECOVERED SOLVENT STORAGE

COMPONENT NO.		MOLES/HR	MOLE FRACTION	LBS/HR	WGT FRACTION	TONS/HR
8	SOLVENT	2.5410	1.00000000	235.4415	1.00000000	0.1177
	TOTALS	2.5410		235.4415		0.1177

TEMPERATURE	70.0000	DEG F	(21.1111 DEG. C)
PRESSURE	54.7000	PSIA.	
HEAT CONTENT	0.0047	MMBTU/HR	
FRACTION VAPOR	0.0		
AVG. MOLECULAR WEIGHT	92.66	LBS/MOLE	

STREAM NUMBER 55 WATER MAKEUP TO (OR WASTE FROM) 1100-T-1 WATER SURGE

COMPONENT NO.	MOLES/HR	MOLE FRACTION	LBS/HR	WGT FRACTION	TONS/HR
6 H2SO4	-0.2710	0.000633255	-26.5793	0.00343792	-0.0133
7 H2O	-427.6704	0.999367297	-7704.6250	0.99656218	-3.8523
TOTALS	-427.9412		-7731.2031		-3.8656

TEMPERATURE	212.0028	DEG F (100.0015 DEG. C)
PRESSURE	54.7000	PSIA.
HEAT CONTENT	-1.3894	MMBTU/HR
FRACTION VAPOR	0.0	
AVG. MOLECULAR WEIGHT	18.07	LBS/MOLE

STREAM NUMBER 56 SULFURIC ACID FROM UNLOADING TO 1100-T-2 STORAGE AND TO 100-V-1 MIXER

COMPONENT NO.	MOLES/HR	MOLE FRACTION	LBS/HR	WGT FRACTION	TONS/HR
6 H2SO4	33.7764	0.900025368	3312.7905	0.98000479	1.6564
7 H2O	3.7519	0.099974751	67.5914	0.01999521	0.0338
TOTALS	37.5283		3380.3818		1.6902

TEMPERATURE	70.0000	DEG F (21.1111 DEG. C)
PRESSURE	54.7000	PSIA.
HEAT CONTENT	0.0446	MMBTU/HR
FRACTION VAPOR	0.0	
AVG. MOLECULAR WEIGHT	90.08	LBS/MOLE

STREAM NUMBER 57 REFLUX TO 1400-V-1 STILL FROM STREAM #58

COMPONENT NO.	MOLES/HR	MOLE FRACTION	LBS/HR	WGT FRACTION	TONS/HR
8 SOLVENT	731.4797	1.00000000	67776.6875	1.00000000	33.8883
TOTALS	731.4797		67776.6875		33.8883

TEMPERATURE	248.0000	DEG F (120.0000 DEG. C)
PRESSURE	60.0000	PSIA.
HEAT CONTENT	9.4368	MMBTU/HR
FRACTION VAPOR	0.0	
AVG. MOLECULAR WEIGHT	92.66	LBS/MOLE

STREAM NUMBER 58 DISTILLED SOLVENT FROM 1400-E-3 CONDENSER TO 1400-V-2 ACCUMULATOR AND TO STREAM #57 AND TO 1400-E-4 COOLER

COMPONENT NO.	MOLES/HR	MOLE FRACTION	LBS/HR	WGT FRACTION	TONS/HR
8 SOLVENT	2194.4392	1.00000000	203330.125	1.00000000	101.6651
TOTALS	2194.4392		203330.125		101.6651

TEMPERATURE	248.0000	DEG F (120.0000 DEG. C)
PRESSURE	60.0000	PSIA.
HEAT CONTENT	28.3105	MMBTU/HR
FRACTION VAPOR	0.0	
AVG. MOLECULAR WEIGHT	92.66	LBS/MOLE

STREAM NUMBER 59

COMPONENT NO.	MOLES/HR	MOLE FRACTION	LBS/HR	WGT FRACTION	TONS/HR
TOTALS	0.0		0.0		0.0

TEMPERATURE	77.0000	DEG F	(25.0000 DEG. C)
PRESSURE	14.7000	PSIA.	
HEAT CONTENT	0.0	MMBTU/HR	
FRACTION VAPOR	0.0		
AVG. MOLECULAR WEIGHT	0.0	LBS/MOLE	

STREAM NUMBER 60 COOLING WATER SUPPLY TO 200-E-1 COOLER

COMPONENT NO.	MOLES/HR	MOLE FRACTION	LBS/HR	WGT FRACTION	TONS/HR
7 H20	121904.500	1.00000000	2196150.00	1.00000000	1098.0750
TOTALS	121904.500		2196150.00		1098.0750

TEMPERATURE	85.0000	DEG F	(29.4444 DEG. C)
PRESSURE	54.7000	PSIA.	
HEAT CONTENT	116.4228	MMBTU/HR	
FRACTION VAPOR	0.0		
AVG. MOLECULAR WEIGHT	18.02	LBS/MOLE	

STREAM NUMBER 61 COOLING WATER RETURN FROM 200-E-1 COOLER

COMPONENT NO.	MOLES/HR	MOLE FRACTION	LBS/HR	WGT FRACTION	TONS/HR
7 H2O	121904.500	1.00000000	2196150.00	1.00000000	1098.0750
TOTALS	121904.500		2196150.00		1098.0750

TEMPERATURE	105.0350	DEG F	(40.5750 DEG. C)
PRESSURE	54.7000	PSIA.	
HEAT CONTENT	160.3509	MMBTU/HR	
FRACTION VAPOR	0.0		
AVG. MOLECULAR WEIGHT	18.02	LBS/MOLE	

STREAM NUMBER 62 COOLING WATER SUPPLY TO 1400-E-4 COOLER

COMPONENT NO.	MOLES/HR	MOLE FRACTION	LBS/HR	WGT FRACTION	TONS/HR
7 H2O	52368.5977	1.00000000	943437.812	1.00000000	471.7187
TOTALS	52368.5977		943437.812		471.7187

TEMPERATURE	85.0000	DEG F	(29.4444 DEG. C)
PRESSURE	54.7000	PSIA.	
HEAT CONTENT	50.0133	MMBTU/HR	
FRACTION VAPOR	0.0		
AVG. MOLECULAR WEIGHT	18.02	LBS/MOLE	

STREAM NUMBER 63 COOLING WATER RETURN FROM 1400-E-4 COOLER

COMPONENT NO.	MOLES/HR	MOLE FRACTION	LBS/HR	WGT FRACTION	TONS/HR
7 H20	52368.5977	1.00000000	943437.812	1.00000000	471.7187
TOTALS	52368.5977		943437.812		471.7187

TEMPERATURE	105.0350	DEG F	(40.5750 DEG. C)
PRESSURE	54.7000	PSIA.	
HEAT CONTENT	68.8842	MMBTU/HR	
FRACTION VAPOR	0.0		
AVG. MOLECULAR WEIGHT	18.02	LBS/MOLE	

STREAM NUMBER 64 COOLING WATER SUPPLY TO 1400-E-3 CONDENSER

COMPONENT NO.	MOLES/HR	MOLE FRACTION	LBS/HR	WGT FRACTION	TONS/HR
7 H20	49722.5586	1.00000000	895768.500	1.00000000	447.8840
TOTALS	49722.5586		895768.500		447.8840

TEMPERATURE	85.0000	DEG F	(29.4444 DEG. C)
PRESSURE	54.7000	PSIA.	
HEAT CONTENT	47.4863	MMBTU/HR	
FRACTION VAPOR	0.0		
AVG. MOLECULAR WEIGHT	18.02	LBS/MOLE	

STREAM NUMBER 65 COOLING WATER RETURN FROM 1400-E-3 CONDENSER

COMPONENT NO.	MOLES/HR	MOLE FRACTION	LBS/HR	WGT FRACTION	TONS/HR
7 H2O	49722.5586	1.00000000	895768.500	1.00000000	447.8840
TOTALS	49722.5586		895768.500		447.8840

TEMPERATURE	105.0350	DEG F	(40.5750 DEG. C)
PRESSURE	54.7000	PSIA.	
HEAT CONTENT	65.4037	MMBTU/HR	
FRACTION VAPOR	0.0		
AVG. MOLECULAR WEIGHT	18.02	LBS/MOLE	

STREAM NUMBER 66 COOLING WATER SUPPLY TO 900-E-1 CONDENSER

COMPONENT NO.	MOLES/HR	MOLE FRACTION	LBS/HR	WGT FRACTION	TONS/HR
7 H2O	99669.3125	1.00000000	1795576.00	1.00000000	897.7878
TOTALS	99669.3125		1795576.00		897.7878

TEMPERATURE	85.0000	DEG F	(29.4444 DEG. C)
PRESSURE	54.7000	PSIA.	
HEAT CONTENT	95.1877	MMBTU/HR	
FRACTION VAPOR	0.0		
AVG. MOLECULAR WEIGHT	18.02	LBS/MOLE	

STREAM NUMBER 67 COOLING WATER RETURN FROM 900-E-1 CONDENSER

COMPONENT NO.	MOLES/HR	MOLE FRACTION	LBS/HR	WGT FRACTION	TONS/HR
7 H20	99669.3125	1.00000000	1795576.00	1.00000000	897.7878
TOTALS	99669.3125		1795576.00		897.7878

TEMPERATURE	105.0350	DEG F (40.5750 DEG. C)
PRESSURE	54.7000	PSIA.
HEAT CONTENT	131.1033	MMBTU/HR
FRACTION VAPOR	0.0	
AVG. MOLECULAR WEIGHT	18.02	LBS/MOLE

STREAM NUMBER 68 COOLING WATER SUPPLY TO 1100-E-5 CONDENSER

COMPONENT NO.	MOLES/HR	MOLE FRACTION	LBS/HR	WGT FRACTION	TONS/HR
7 H20	294004.812	1.00000000	5296595.00	1.00000000	2648.2974
TOTALS	294004.812		5296595.00		2648.2974

TEMPERATURE	85.0000	DEG F (29.4444 DEG. C)
PRESSURE	54.7000	PSIA.
HEAT CONTENT	280.7822	MMBTU/HR
FRACTION VAPOR	0.0	
AVG. MOLECULAR WEIGHT	18.02	LBS/MOLE

STREAM NUMBER 69 COOLING WATER RETURN FROM 1100-E-5 CONDENSER

COMPONENT NO.	MOLES/HR	MOLE FRACTION	LBS/HR	WGT FRACTION	TONS/HR
7 H2O	294004.812	1.00000000	5296595.00	1.00000000	2648.2974
TOTALS	294004.812		5296595.00		2648.2974

TEMPERATURE	105.3040	DEG F	(40.7245 DEG. C)
PRESSURE	54.7000	PSIA.	
HEAT CONTENT	388.1489	MMBTU/HR	
FRACTION VAPOR	0.0		
AVG. MOLECULAR WEIGHT	18.02	LBS/MOLE	

STREAM NUMBER 70 COOLING WATER SUPPLY TO 1100-E-2 COOLER

COMPONENT NO.	MOLES/HR	MOLE FRACTION	LBS/HR	WGT FRACTION	TONS/HR
7 H2O	4245.0078	1.00000000	76475.1875	1.00000000	38.2376
TOTALS	4245.0078		76475.1875		38.2376

TEMPERATURE	85.0000	DEG F	(29.4444 DEG. C)
PRESSURE	54.7000	PSIA.	
HEAT CONTENT	4.0542	MMBTU/HR	
FRACTION VAPOR	0.0		
AVG. MOLECULAR WEIGHT	18.02	LBS/MOLE	

STREAM NUMBER 71 COOLING WATER RETURN FROM 1100-E-2 COOLER

COMPONENT NO.	MOLES/HR	MOLE FRACTION	LBS/HR	WGT FRACTION	TONS/HR
7 H20	4245.0078	1.00000000	76475.1875	1.00000000	38.2376
TOTALS	4245.0078		76475.1875		38.2376

TEMPERATURE	105.0350	DEG F	(40.5750 DEG. C)
PRESSURE	54.7000	PSIA.	
HEAT CONTENT	5.5838	MMBTU/HR	
FRACTION VAPOR	0.0		
AVG. MOLECULAR WEIGHT	18.02	LBS/MOLE	

STREAM NUMBER 72 SOLVENT FROM STREAM #34 TO 1400-E-2 INTERCHANGER

COMPONENT NO.	MOLES/HR	MOLE FRACTION	LBS/HR	WGT FRACTION	TONS/HR
3 SULFUR	101.4708	0.064861178	3253.1533	0.02343661	1.6266
8 SOLVENT	1462.9595	0.935138822	135553.375	0.97656357	67.7767
TOTALS	1564.4302		138806.500		69.4032

TEMPERATURE	165.0525	DEG F	(73.9180 DEG. C)
PRESSURE	54.7000	PSIA.	
HEAT CONTENT	10.6055	MMBTU/HR	
FRACTION VAPOR	0.0		
AVG. MOLECULAR WEIGHT	88.73	LBS/MOLE	

STREAM NUMBER 73 SOLVENT FROM STREAM #34 TO STREAM #37

COMPONENT NO.	MOLES/HR	MOLE FRACTION	LBS/HR	WGT FRACTION	TONS/HR
3 SULFUR	103.4200	0.063842297	3315.6443	0.02305242	1.6578
8 SOLVENT	1516.5076	0.936157644	140515.000	0.97694767	70.2575
TOTALS	1619.9275		143830.625		71.9153

TEMPERATURE	165.0525	DEG F	(73.9180 DEG. C)
PRESSURE	54.7000	PSIA.	
HEAT CONTENT	10.9923	MMBTU/HR	
FRACTION VAPOR	0.0		
AVG. MOLECULAR WEIGHT	88.79	LBS/MOLE	

STREAM NUMBER 74 SOLVENT FROM 1400-E-2 INTERCHANGER TO 1400-V-1 STILL

COMPONENT NO.	MOLES/HR	MOLE FRACTION	LBS/HR	WGT FRACTION	TONS/HR
3 SULFUR	101.4708	0.064861178	3253.1533	0.02343661	1.6266
8 SOLVENT	1462.9595	0.935138822	135553.375	0.97656357	67.7767
TOTALS	1564.4302		138806.500		69.4032

TEMPERATURE	246.0000	DEG F	(118.8889 DEG. C)
PRESSURE	40.0000	PSIA.	
HEAT CONTENT	18.7851	MMBTU/HR	
FRACTION VAPOR	0.0		
AVG. MOLECULAR WEIGHT	88.73	LBS/MOLE	

STREAM NUMBER 75 VAPOR FROM 1400-V-1 STILL TO 1400-E-2 INTERCHANGER

COMPONENT NO.	MOLES/HR	MOLE FRACTION	LBS/HR	WGT FRACTION	TONS/HR
8 SOLVENT	2194.4392	1.00000000	203330.125	1.00000000	101.6651
TOTALS	2194.4392		203330.125		101.6651

TEMPERATURE	250.0000	DEG F (121.1111 DEG. C)
PRESSURE	40.0000	PSIA.
HEAT CONTENT	54.4101	MMBTU/HR
FRACTION VAPOR	1.0000	
AVG. MOLECULAR WEIGHT	92.66	LBS/MOLE

STREAM NUMBER 76 CONDENSATE FROM 1400-E-2 INTERCHANGER TO 1400-E-3 CONDENSER

COMPONENT NO.	MOLES/HR	MOLE FRACTION	LBS/HR	WGT FRACTION	TONS/HR
8 SOLVENT	2194.4392	1.00000000	203330.125	1.00000000	101.6651
TOTALS	2194.4392		203330.125		101.6651

TEMPERATURE	246.8251	DEG F (119.3472 DEG. C)
PRESSURE	40.0000	PSIA.
HEAT CONTENT	46.2305	MMBTU/HR
FRACTION VAPOR	0.6993	
AVG. MOLECULAR WEIGHT	92.66	LBS/MOLE

STREAM NUMBER 77 50% NAOH TO 1500 V-2 SURGE-DECANTER

COMPONENT NO.	MOLES/HR	MOLE FRACTION	LBS/HR	WGT FRACTION	TONS/HR
TOTALS	0.0*		0.0*		0.0*

TEMPERATURE	77.0000	DEG F	(25.0000 DEG. C)
PRESSURE	14.7000	PSIA.	
HEAT CONTENT	0.0	MMBTU/HR	
FRACTION VAPOR	0.0		
AVG. MOLECULAR WEIGHT	0.0	LBS/MOLE	

STREAM NUMBER 90 STEAM TO 1400-V-1 STILL JACKET

COMPONENT NO.	MOLES/HR	MOLE FRACTION	LBS/HR	WGT FRACTION	TONS/HR
7 H20	14.3670	1.00000000	258.8264	1.00000000	0.1294
TOTALS	14.3670		258.8264		0.1294

TEMPERATURE	353.0095	DEG F	(178.3386 DEG. C)
PRESSURE	140.0000	PSIA.	
HEAT CONTENT	0.3089	MMBTU/HR	
FRACTION VAPOR	1.0000		
AVG. MOLECULAR WEIGHT	18.02	LBS/MOLE	

*QUANTITY NOT DETERMINABLE

STREAM NUMBER 91 CONDENSATE FROM 1400-V-1 STILL JACKET

COMPONENT NO.	MOLES/HR	MOLE FRACTION	LBS/HR	WGT FRACTION	TONS/HR
7 H20	14.3670	1.00000000	258.8264	1.00000000	0.1294
TOTALS	14.3670		258.8264		0.1294

TEMPERATURE	353.0000	DEG F	(178.3333 DEG. C)
PRESSURE	140.0000	PSIA.	
HEAT CONTENT	0.0841	MMBTU/HR	
FRACTION VAPOR	0.0		
AVG. MOLECULAR WEIGHT	18.02	LBS/MOLE	

STREAM NUMBER 92 STEAM TO 1400-E-1 REBOILER

COMPONENT NO.	MOLES/HR	MOLE FRACTION	LBS/HR	WGT FRACTION	TONS/HR
7 H20	1673.9421	1.00000000	30156.6250	1.00000000	15.0783
TOTALS	1673.9421		30156.6250		15.0783

TEMPERATURE	353.0095	DEG F	(178.3386 DEG. C)
PRESSURE	140.0000	PSIA.	
HEAT CONTENT	35.9861	MMBTU/HR	
FRACTION VAPOR	1.0000		
AVG. MOLECULAR WEIGHT	18.02	LBS/MOLE	

STREAM NUMBER 93 CONDENSATE FROM 1400-E-1 REBOILER

COMPONENT NO.	MOLES/HR	MOLE FRACTION	LBS/HR	WGT FRACTION	TONS/HR
7 H2O	1673.9421	1.00000000	30156.6250	1.00000000	15.0783
TOTALS	1673.9421		30156.6250		15.0783

TEMPERATURE	353.0000	DEG F	(178.3333 DEG. C)
PRESSURE	140.0000	PSIA.	
HEAT CONTENT	9.7974	MMBTU/HR	
FRACTION VAPOR	0.0		
AVG. MOLECULAR WEIGHT	18.02	LBS/MOLE	

STREAM NUMBER 94 STEAM TO 900-ME-1 DRYER

COMPONENT NO.	MOLES/HR	MOLE FRACTION	LBS/HR	WGT FRACTION	TONS/HR
7 H2O	2446.2734	1.00000000	44070.4336	1.00000000	22.0352
TOTALS	2446.2734		44070.4336		22.0352

TEMPERATURE	353.0095	DEG F	(178.3386 DEG. C)
PRESSURE	140.0000	PSIA.	
HEAT CONTENT	52.5895	MMBTU/HR	
FRACTION VAPOR	1.0000		
AVG. MOLECULAR WEIGHT	18.02	LBS/MOLE	

STREAM NUMBER 95 CONDENSATE FROM 900-ME-1 DRYER

COMPONENT NO.	MOLES/HR	MOLE FRACTION	LBS/HR	WGT FRACTION	TONS/HR
7 H20	2446.2734	1.00000000	44070.4336	1.00000000	22.0352
TOTALS	2446.2734		44070.4336		22.0352

TEMPERATURE	353.0000	DEG F (178.3333 DEG. C)
PRESSURE	140.0000	PSIA.
HEAT CONTENT	14.3177	MMBTU/HR
FRACTION VAPOR	0.0	
AVG. MOLECULAR WEIGHT	18.02	LBS/MOLE

STREAM NUMBER 96 STEAM TO 1100-E-1 HEATER

COMPONENT NO.	MOLES/HR	MOLE FRACTION	LBS/HR	WGT FRACTION	TONS/HR
7 H20	7805.0859	1.00000000	140611.187	1.00000000	70.3056
TOTALS	7805.0859		140611.187		70.3056

TEMPERATURE	353.0095	DEG F (178.3386 DEG. C)
PRESSURE	140.0000	PSIA.
HEAT CONTENT	167.7923	MMBTU/HR
FRACTION VAPOR	1.0000	
AVG. MOLECULAR WEIGHT	18.02	LBS/MOLE

STREAM NUMBER 97 CONDENSATE FROM 1100-E-1 HEATER

COMPONENT NO.	MOLES/HR	MOLE FRACTION	LBS/HR	WGT FRACTION	TONS/HR
7 H2O	7805.0859	1.00000000	140611.187	1.00000000	70.3056
TOTALS	7805.0859		140611.187		70.3056

TEMPERATURE	353.0000	DEG F	(178.3333 DEG. C)
PRESSURE	140.0000	PSIA.	
HEAT CONTENT	45.6821	MMBTU/HR	
FRACTION VAPOR	0.0		
AVG. MOLECULAR WEIGHT	18.02	LBS/MOLE	

STREAM NUMBER 98 STEAM (125 PSI) TO TRAIN

COMPONENT NO.	MOLES/HR	MOLE FRACTION	LBS/HR	WGT FRACTION	TONS/HR
7 H2O	11939.6680	1.00000000	215097.062	1.00000000	107.5485
TOTALS	11939.6680		215097.062		107.5485

TEMPERATURE	353.0095	DEG F	(178.3386 DEG. C)
PRESSURE	140.0000	PSIA.	
HEAT CONTENT	256.6768	MMBTU/HR	
FRACTION VAPOR	1.0000		
AVG. MOLECULAR WEIGHT	18.02	LBS/MOLE	

STREAM NUMBER 100 STEAM (400 PSI) TO 1100-ME-2 DRYER

COMPONENT NO.	MOLES/HR	MOLE FRACTION	LBS/HR	WGT FRACTION	TONS/HR
7 H2O	563.3384	1.00000000	10148.7266	1.00000000	5.0744
TOTALS	563.3384		10148.7266		5.0744

TEMPERATURE	448.2000	DEG F	(231.2222 DEG. C)
PRESSURE	415.0000	PSIA.	
HEAT CONTENT	12.2232	MMBTU/HR	
FRACTION VAPOR	1.0000		
AVG. MOLECULAR WEIGHT	18.02	LBS/MOLE	

STREAM NUMBER 101 CONDENSATE FROM 1100-ME-2 DRYER

COMPONENT NO.	MOLES/HR	MOLE FRACTION	LBS/HR	WGT FRACTION	TONS/HR
7 H20	563.3384	1.00000000	10148.7266	1.00000000	5.0744
TOTALS	563.3384		10148.7266		5.0744

TEMPERATURE	448.2000	DEG F (231.2222 DEG. C)
PRESSURE	415.0000	PSIA.
HEAT CONTENT	4.3473	MMBTU/HR
FRACTION VAPOR	0.0	
AVG. MOLECULAR WEIGHT	18.02	LBS/MOLE

STREAM NUMBER 105 FROM STREAM #5 TO STREAM #7

COMPONENT NO.	MOLES/HR	MOLE FRACTION	LBS/HR	WGT FRACTION	TONS/HR
1 COAL	11982.1016	0.392147899	155767.312	0.28081745	77.8837
2 FES2	80.3128	0.002628463	9635.9336	0.01737167	4.8180
3 SULFUR	10.3369	0.000338305	331.4014	0.00059745	0.1657
4 FESO4	191.7173	0.006274488	29122.4375	0.05250197	14.5612
5 FE2(SO4)3	60.1591	0.001968877	24055.3594	0.04336703	12.0277
6 H2SO4	91.8341	0.003005530	9007.0898	0.01623799	4.5035
7 H20	18138.6016	0.593636632	326772.937	0.58910662	163.3865
TOTALS	30555.0547		554692.312		277.3462

TEMPERATURE	215.6000	DEG F (102.0000 DEG. C)
PRESSURE	154.7000	PSIA.
HEAT CONTENT	70.3084	MMBTU/HR
FRACTION VAPOR	0.0	
AVG. MOLECULAR WEIGHT	18.15	LBS/MOLE

STREAM NUMBER 114 SULFATES FROM STREAM #40 TO 100-V-1 MIXED (CHECK STREAM #14)

COMPONENT NO.		MOLES/HR	MOLE FRACTION	LBS/HR	WGT FRACTION	TONS/HR
4	FESO4	0.8344	0.000396430	126.7544	0.00328047	0.0634
5	FE2(SO4)3	1.5776	0.000749495	630.8245	0.01632604	0.3154
7	H2O	2102.7405	0.998978674	37881.5742	0.98039347	18.9408
	TOTALS	2104.8901		38639.1523		19.3196

TEMPERATURE	77.0000	DEG F (25.0000 DEG. C)
PRESSURE	35.0000	PSIA.
HEAT CONTENT	0.0	MMBTU/HR
FRACTION VAPOR	0.0	
AVG. MOLECULAR WEIGHT	18.36	LBS/MOLE

STREAM NUMBER 118 FROM STREAM #123 TO 1100-V-2 RESLURRY TANK

COMPONENT NO.		MOLES/HR	MOLE FRACTION	LBS/HR	WGT FRACTION	TONS/HR
1	COAL	0.0004	0.000005632	0.0051	0.00000205	0.0000
4	FESO4	1.1111	0.016024720	168.7818	0.06802934	0.0844
5	FE2(SO4)3	2.2566	0.032545440	902.3376	0.36369711	0.4512
6	H2SO4	2.7656	0.039886154	271.2510	0.10933065	0.1356
7	H2O	63.2039	0.911538184	1138.6384	0.45894074	0.5693
	TOTALS	69.3376		2481.0139		1.2405

TEMPERATURE	215.0000	DEG F (101.6666 DEG. C)
PRESSURE	14.7000	PSIA.
HEAT CONTENT	0.2583	MMBTU/HR
FRACTION VAPOR	0.0	
AVG. MOLECULAR WEIGHT	35.78	LBS/MOLE

STREAM NUMBER 119 WATER FROM 1100-P-3-A&B TO 1100-V-2 RESLURRY TANK

COMPONENT NO.	MOLES/HR	MOLE FRACTION	LBS/HR	WGT FRACTION	TONS/HR
6 H2SO4	1.1654	0.000368626	114.3017	0.00200361	0.0572
7 H2O	3160.2808	0.999631405	56933.5156	0.99799639	28.4668
TOTALS	3161.4460		57047.8164		28.5239

TEMPERATURE	212.0132	DEG F	(100.0073 DEG. C)
PRESSURE	54.7000	PSIA.	
HEAT CONTENT	10.2624	MMBTU/HR	
FRACTION VAPOR	0.0		
AVG. MOLECULAR WEIGHT	18.04	LBS/MOLE	

STREAM NUMBER 120 SULFATES FROM 1100-E-1 HEATER TO 1100-V-1 CONCENTRATOR

COMPONENT NO.	MOLES/HR	MOLE FRACTION	LBS/HR	WGT FRACTION	TONS/HR
1 COAL	0.0391	0.000003949	0.5078	0.00000124	0.0003
2 FES2	0.0002	0.000000015	0.0183	0.00000004	0.0000
4 FESO4	802.0110	0.081078351	121827.812	0.29732925	60.9139
5 FE2(SO4)3	251.6638	0.025441665	100630.812	0.24559647	50.3154
6 H2SO4	350.4695	0.035430312	34374.0469	0.08389223	17.1870
7 H2O	8487.6172	0.858045995	152907.250	0.37318081	76.4536
TOTALS	9891.7969		409740.375		204.8702

TEMPERATURE	307.7864	DEG F	(153.2146 DEG. C)
PRESSURE	35.0000	PSIA.	
HEAT CONTENT	173.9696	MMBTU/HR	
FRACTION VAPOR	0.7347		
AVG. MOLECULAR WEIGHT	41.42	LBS/MOLE	

STREAM NUMBER 121 SULFATES FROM 1100-E-2 COOLER TO 1100-F-2 FILTER

COMPONENT NO.		MOLES/HR	MOLE FRACTION	LBS/HR	WGT FRACTION	TONS/HR
1	COAL	0.0039	0.000003949	0.0508	0.00000124	0.0000
2	FES2	0.0000	0.000000015	0.0018	0.00000004	0.0000
4	FESO4	80.2011	0.081078351	12182.7891	0.29732937	6.0914
5	FE2(SO4)3	25.1664	0.025441661	10063.0781	0.24559635	5.0315
6	H2SO4	35.0470	0.035430323	3437.4065	0.08389223	1.7187
7	H2O	848.7617	0.858045816	15290.7266	0.37318069	7.6454
	TOTALS	989.1799		40974.0508		20.4870

TEMPERATURE	215.0000	DEG F (101.6666 DEG. C)
PRESSURE	14.7000	PSIA.
HEAT CONTENT	3.6563	MMBTU/HR
FRACTION VAPOR	0.0	
AVG. MOLECULAR WEIGHT	41.42	LBS/MOLE

STREAM NUMBER 122 SULFATES WASTE FROM 1100-F-2 TO LINE #22

COMPONENT NO.		MOLES/HR	MOLE FRACTION	LBS/HR	WGT FRACTION	TONS/HR
4	FESO4	69.0858	0.233756244	10494.3437	0.64961457	5.2472
5	FE2(SO4)3	2.5919	0.008769732	1036.3877	0.06415385	0.5182
6	H2SO4	7.3806	0.024972729	723.8892	0.04480975	0.3619
7	H2O	216.4882	0.732501626	3900.1077	0.24142212	1.9501
	TOTALS	295.5464		16154.7227		8.0774

TEMPERATURE	215.0000	DEG F (101.6666 DEG. C)
PRESSURE	14.7000	PSIA.
HEAT CONTENT	1.0719	MMBTU/HR
FRACTION VAPOR	0.0	
AVG. MOLECULAR WEIGHT	54.66	LBS/MOLE

STREAM NUMBER 123 FILTRATE FROM 1100-F-2 TO STREAMS #24 AND #118

COMPONENT NO.	MOLES/HR	MOLE FRACTION	LBS/HR	WGT FRACTION	TONS/HR
1 COAL	0.0039	0.000005632	0.0508	0.00000205	0.0000
2 FES2	0.0000	0.000000022	0.0018	0.00000007	0.0000
4 FESO4	11.1153	0.016024712	1688.4443	0.06802940	0.8442
5 FE2(SO4)3	22.5745	0.032545295	9026.6875	0.36369604	4.5133
6 H2SO4	27.6664	0.039886139	2713.5171	0.10933083	1.3568
7 H2O	632.2734	0.911538124	11390.6172	0.45894158	5.6953
TOTALS	693.6335		24819.3164		12.4097

TEMPERATURE	215.0000	DEG F (101.6666 DEG. C)
PRESSURE	14.7000	PSIA.
HEAT CONTENT	2.5845	MMBTU/HR
FRACTION VAPOR	0.0	
AVG. MOLECULAR WEIGHT	35.78	LBS/MOLE

STREAM NUMBER 124 SULFATES WASTE FROM 1100-ME-2 DRYER TO STREAM #22

COMPONENT NO.	MOLES/HR	MOLE FRACTION	LBS/HR	WGT FRACTION	TONS/HR
1 COAL	0.0035	0.000014841	0.0457	0.00000298	0.0000
2 FES2	0.0000	0.000000058	0.0016	0.00000011	0.0000
4 FESO4	10.0042	0.042231631	1519.6626	0.09908271	0.7598
5 FE2(SO4)3	20.3179	0.085770011	8124.3516	0.52971154	4.0622
6 H2SO4	24.6298	0.103972197	2415.6868	0.15750390	1.2078
7 H2O	181.9324	0.768010259	3277.5725	0.21369922	1.6388
TOTALS	236.8879		15337.3125		7.6687

TEMPERATURE	353.0200	DEG F (178.3444 DEG. C)
PRESSURE	250.0000	PSIA.
HEAT CONTENT	1.8702	MMBTU/HR
FRACTION VAPOR	0.0	
AVG. MOLECULAR WEIGHT	64.75	LBS/MOLE

STREAM NUMBER 145 DUMMY STREAM (INTERNAL IN 800-F-1A-D)

COMPONENT NO.		MOLES/HR	MOLE FRACTION	LBS/HR	WGT FRACTION	TONS/HR
1	COAL	17461.5234	0.869458377	226999.750	0.80591297	113.4999
2	FES2	6.5900	0.000328134	790.6675	0.00280709	0.3953
3	SULFUR	5.2941	0.000263609	169.7298	0.00060259	0.0849
4	FESO4	0.9474	0.000047171	143.9057	0.00051091	0.0720
5	FE2(SO4)3	1.8918	0.000094196	756.4441	0.00268559	0.3782
6	H2SO4	1.8079	0.000090020	177.3180	0.00062953	0.0887
7	H2O	2528.8494	0.125918508	45558.0664	0.16174394	22.7790
8	SOLVENT	76.3254	0.003800458	7072.0859	0.02510789	3.5360
	TOTALS	20083.2187		281667.812		140.8339

TEMPERATURE	173.5540	DEG F	(78.6411 DEG. C)
PRESSURE	14.7000	PSIA.	
HEAT CONTENT	15.9829	MMBTU/HR	
FRACTION VAPOR	0.0		
AVG. MOLECULAR WEIGHT	14.03	LBS/MOLE	

HEAT LOSSES FROM FILTRATION UNITS IN MM BTU/HR

400-F-1 = 0.2178
600-F-1 = 0.1840
800-F-1 = 0.1440

THE QUANTITIES AND CONDITIONS OF STREAMS 201 to 212 ARE NOT DETERMINABLE AT PRESENT.

STREAM NUMBER 201	VENT FROM 500-V-1 TO 1500-V-1 SCRUBBER
STREAM NUMBER 202	VENT FROM 600-V-1 TO 1500-V-1 SCRUBBER
STREAM NUMBER 203	VENT FROM 700-V-1 TO 1500-V-1 SCRUBBER
STREAM NUMBER 204	VENT FROM 800-V-1 TO 1500-V-1 SCRUBBER
STREAM NUMBER 205	VENT FROM 900-V-1 TO 1500-V-1 SCRUBBER
STREAM NUMBER 206	VENT FROM 1400-V-2 TO 1500-V-1 SCRUBBER
STREAM NUMBER 207	VENT FROM 1400-T-1 TO 1500-V-1 SCRUBBER
STREAM NUMBER 208	VENT FROM 1400-T-2 TO 1500-V-1 SCRUBBER

STREAM NUMBER 209	VENT FROM 1400-T-3 TO 1500-V-1 SCRUBBER
STREAM NUMBER 210	VENT FROM 1400-T-4 TO 1500-V-1 SCRUBBER
STREAM NUMBER 211	VENT FROM 1100-V-2 TO 1500-V-1 SCRUBBER
STREAM NUMBER 212	VENT FROM 1100-E-5 TO 1500-V-1 SCRUBBER

10.5.3 Calculation of Sulfur Forms in the Product Coal

Utilizing the detail from the foregoing section and the sulfur forms analyses from Table 2 in Section 4.1.1, the residual sulfur in the product coal, Stream #53, may be calculated as follows:

Basis: One hour of operation for one train (tons/hr column in Section 10.5.2, Stream #53).

Total weight less moisture,
(118.6806 - 4.5559 = 114.1247 or 114.1 T

		Sulfur forms present, T	%
Initially present in feed coal (Stream #1 & Table 2):			
Organic sulfur, (113.5 + 8.15) x 0.0067	=	0.8150	0.714
Sulfate sulfur, (113.5 + 8.15) x 0.0004	=	0.0487	0.043
Residual compounds in product coal (Stream #53):			
Iron pyrites, 0.3953 x (2 x 32.1/119.8)	=	0.2118	0.185
Elemental sulfur, 0.0312	=	0.0312	0.027
Ferrous sulfate, 0.0265 x 32.1/151.9	=	0.0056	0.005
Ferric sulfate, 0.1393 x (3 x 32.1/399.9)	=	0.0335	0.029
Sulfuric acid, 0.0326 x (32.1/98.1)	=	0.0107	0.009
Subtotal from feed or reactions		1.1565	1.012
Added as binder during compaction:			
Lignin sulfonate, 1.71 x 0.05	=	0.0855	0.075
TOTAL, based on Stream #53, dry		1.2420	1.087

Note that 0.67% organic sulfur in the feed coal containing 6.7% FeS_2 becomes 0.714% in the product coal because the denominator in the fraction, S/coal, has been reduced by the amount of FeS_2 converted less other residual compounds remaining. Similarly, when 95% of the initial 6.7% FeS_2 is removed the residual FeS_2 is more than 0.05 x 6.7 or 0.335%. Excluding other residuals it would be,

$$\frac{0.05 \times 6.7 \times 100}{100 - (0.95 \times 6.7)} = \frac{0.335 \times 100}{93.635} = 0.3578\%.$$

10.6 CAPITAL COSTS

10.6.1 Capital Cost Estimate Summary

Table 26. Summary of Capital Costs by Sector

SECTOR		M$ (1975)
000	Coal Handling & Preparation	8,800.0
100	Mixing	1,044.5
200	Reaction	23,960.1
400	Filtration	6,906.1
500	Extraction	1,010.1
600	Filtration/Decantation	7,338.2
700	Water Washing	1,126.3
800	Filtration/Decantation	8,630.6
900	Drying, Decantation, Compacting	6,984.9
1000	Product Coal Handling	3,770.0
1100	Iron Sulfates Removal	13,891.3
1400	Distillation	4,931.7
1500	Vent Scrubbing	642.0
1900	Building & Miscellaneous	10,864.3
	SUB-TOTAL PROCESSING	99,900.1
2000	Utilities	28,251.8
3000	Site Development & General	4,503.9
	SUB-TOTAL	132,655.8
	Allowances (10%)	13,344.2
	TOTAL	146,000.0

PROBABILITY - 80%

Maximum (+22%) $180,000.0M

Minimum (-18%) $120,000.0M

10.6.2 Capital Cost Estimate Details

The following detail sheets substantiate the sector totals on the capital cost estimate summary. Costs for the various items were estimated by one or more of the following methods:

1. Unit operations data, proprietary information of Dow.

2. Vendor quotations.

3. Popper, H., Ed., "Modern Cost-Engineering Techniques," McGraw-Hill, New York, 1970[26].

4. Factors and/or allowances for installation and indirect costs.

PRELIMINARY CAPITAL - DETAIL SHEET THE DOW CHEMICAL COMPANY MIDLAND, MICHIGAN SHEET 1 OF 35

PROJECT: COAL - PYRITIC SULFUR REMOVAL | JOB NUMBER: 730623

PHASE: I | CASE: Task 2 | BY: E. F. Hensley | DATE: 2-26-74 | EF NUMBER: 657

SECTION NUMBER & NAME: 000 COAL HANDLING & PREPARATION | SECTOR NUMBER & NAME:

FACTORS: BASE X ESC. X CAPACITY X QUANT. X [MATERIAL + CONDITION + COMPLEXITY] = M$(19)

ITEM	NAME OF FACILITY	QUANT.	CONSTRUCTION MATERIAL	DESCRIPTION	1975
	R.R Track			See Site Dev.	—
001 ↓ 016	Coal Receiving & Storage			Erected Price Per FMC Quote	
021 ↓ 025	Crushing & Pulverizing			"	9000.0
031 ↓ 034	Pulverized Coal Handling			"	
	Electrical Controls			"	
	Concrete & Foundations			001 Car Dumper House All conveyors & Transfer Houses Crusher/Pulverizer House	900.0
	Tunnels & Pits			003 Hopper 004 Feeders 005 Conveyor 006 " (part)	550.0
	Field Wiring			012 conveyor For all motors	280.0
	Dust suppression			Allowance	100.0
	Fire Protection			Allowance	100.0
	Allow for "Budget-quote" & Scope changes 15%				1640.0
				Total For Complex	12,570
				assume 70% to 000 Sector	8,800

FORM 39650 PRINTED IN U.S.A. R1-69

PRELIMINARY CAPITAL - DETAIL SHEET THE DOW CHEMICAL COMPANY MIDLAND, MICHIGAN

SHEET 2 OF 35

PROJECT: COAL-PYRITIC SULFUR REMOVAL | JOB NUMBER: 730623

PHASE: I | CASE: Task 2 | BY: E. F. Hensley | DATE: 2-26-74 | EF NUMBER: 657

SECTION NUMBER & NAME: 100- MIXING | SECTOR NUMBER & NAME:

FACTORS: BASE X ESC. X CAPACITY X QUANT. X [MATERIAL + CONDITION + COMPLEXITY] = M$(19)

ITEM	NAME OF FACILITY	QUANT.	CONSTRUCTION MATERIAL	DESCRIPTION	1975
100 ME-1	Bucket Elevator	1	Steel	130 Tons/hr 15"x8" Buckets Heavy Duty Dust Tight	
	$.5 \times (40)^{.83} \times 1.84 \times 1.544$	$\times 1.3$		Approx 40' Base to Discharge	39.5
100 V-1	Mixing Tank	1	STEEL Neoprene Lined	85000 gal 24'dia 25'high Flat Top Flat Bottom - slope to outlet 1" Insulation	
	49.5 x 1.544	1.0	(1.45+0.1)		118.5
100 A-1	Agitator	1	Neoprene & 316 Wetted parts	75 HP	
	30.0 x 1.544	1.0	(1.0+.75x.45)		62.0
	Structural for Agitator Support	Lot			
	75 x 30 x .001				2.3
100 V-2	Absorber	1	Steel-Neoprene Lined	3'-3" dia x 8'-2"	
	10.0 x 1.544	1.45	Ceramic Saddles		22.4

FORM 38480 PRINTED IN U.S.A. R1-69

PRELIMINARY CAPITAL - DETAIL SHEET

THE DOW CHEMICAL COMPANY
MIDLAND, MICHIGAN

SHEET 3 OF 35

PROJECT			JOB NUMBER
COAL-PYRITIC SULFUR REMOVAL			730623
PHASE: I	CASE: Task 2	BY: E. F. Hensley	DATE: 2-26-74	EP NUMBER: 657

SECTION NUMBER & NAME: 100- MIXING

SECTOR NUMBER & NAME:

FACTORS: BASE X ESC. X CAPACITY X QUANT. X [MATERIAL + CONDITION + COMPLEXITY] = M$(19)

ITEM	NAME OF FACILITY	QUANT.	CONSTRUCTION MATERIAL	DESCRIPTION	1975
	Instrumentation			Purchase	16.7
				Installation	20.9
				Sub Total (1 Train)	282.3
				3 Additional Trains	762.2
				Total for Complex	1044.5

FORM 38650 PRINTED IN U.S.A. R1-69

PRELIMINARY CAPITAL - DETAIL SHEET THE DOW CHEMICAL COMPANY MIDLAND, MICHIGAN

SHEET 4 OF 35

PROJECT: COAL-PYRITIC SULFUR REMOVAL | JOB NUMBER: 730623

PHASE: I | CASE: Task 2 | BY: E. F. Hensley | DATE: 2-26-74 | EF NUMBER: 657

SECTION NUMBER & NAME: 200-REACTION | SECTOR NUMBER & NAME:

FACTORS: BASE X ESC. X CAPACITY X QUANT. X [MATERIAL + CONDITION + COMPLEXITY] = M$(19)

ITEM	NAME OF FACILITY	QUANT.	CONSTRUCTION MATERIAL	DESCRIPTION	1975
200-P-1 A&B	Feed Pump	2	316	6x8-15 125 HP	
	$(1.25)^{.588} \times 42.0 \times 1.544$	1.778	1.0		131.5
200-R-1 A-K	Reactor	10	Steel Shell 125 psig 1/4" Neoprene Lining 4 1/2" Acid Brick Lining		
			See Spec Sheet #1 Nozzle Detail - Sheet #2 Titanium Spargers (2)		
			See Spec Sheets #3&4		
	$0.63 \times (14)^{1.08} \times (100)^{.7} \times 1.544$ (17.3, 25.1)	8.002	$(1.1 + 1.45 + 0.45 + (\frac{125}{50})^{.3} - 1.0)/2.1$		5337.7
	16 ft (4" Sch80) x 100 116 ft (2" Sch80) x 25 13 couplings (2") x 42 Fabrication & Installation			1600 2900 546 5046 5046 Mat'l 6.0 F&I 6.0 12.0 x 20 x 1.544	370.6
200-E-1	Cooler	1	Titanium Tubes & Channels Steel Shell	550 sq ft	
				1" OD x 26'-3" long Tubes	
	20.0 x 1.544	1.0	4.3		132.8

FORM 38650 PRINTED IN U.S.A. R1-63

PRELIMINARY CAPITAL - DETAIL SHEET THE DOW CHEMICAL COMPANY MIDLAND, MICHIGAN

SHEET 5 OF 35

PROJECT: COAL-PYRITIC SULFUR REMOVAL | JOB NUMBER: 730623

PHASE: I | CASE: Task 2 | BY: E. F. Hensley | DATE: 2-26-74 | EF NUMBER: 657

SECTION NUMBER & NAME: 200-REACTION | SECTOR NUMBER & NAME:

FACTORS: BASE X ESC. X CAPACITY X QUANT. X [MATERIAL + CONDITION + COMPLEXITY] = M$(19)

ITEM	NAME OF FACILITY	QUANT.	CONSTRUCTION MATERIAL	DESCRIPTION	1975
	Instrumentation			Purchase	223.6
				Installation	279.5
				Sub Total (1 Train)	6475.7
				3 Additional Trains	17,484.4
				Total for Complex	23,960.1

FORM 33650 PRINTED IN U.S.A. R1-69

PRELIMINARY CAPITAL - DETAIL SHEET THE DOW CHEMICAL COMPANY MIDLAND, MICHIGAN SHEET 6 OF 35

PROJECT				JOB NUMBER
COAL-PYRITIC SULFUR REMOVAL				730623
PHASE	CASE	BY	DATE	EF NUMBER
I	Task 2	E. F. Hensley	2-26-74	657
SECTION NUMBER & NAME		SECTOR NUMBER & NAME		
400-FILTRATION				

FACTORS: BASE X ESC. X CAPACITY X QUANT. X [MATERIAL + CONDITION + COMPLEXITY] = M$(19)

ITEM	NAME OF FACILITY	QUANT.	CONSTRUCTION MATERIAL	DESCRIPTION	1975
400-F-1 A-D	Filter	4	Neoprene Covered Polypropylene Cloth	12'x22' See Dorr-Oliver Quote	
	Includes:				
	Vacuum Pumps	4	Steel		
	Filtrate Rec	4	Neoprene		
	Filtrate Pumps	8	316	(Assume quote for 4)	
	Level Controls	4	–		
	Drum Speed Control	4	–	(Not incl in quote)	
	High & Low Pan Level Switches	4	–	(Not incl in quote)	
	16.5 x 1.544 x 3.334			Purchase 560.0 Erect 112.0 Piping 420.0	
	15.D 4 x 15.8 = 63.2 20 8 x 4.9 = 39.2 10 4 x 3.3 = 13.2 115.6 x 1.544 = 178.5			1092.0 Indirect 436.8 Electrical 178.5 Extra pumps 84.9 1792.2	1792.2
400-ME-1	Screw Conveyor	1	Neoprene Lined & Covered	20" Screw Dia 60 ft total Length 4-inlets	
				1-Discharge 20 HP Drive	
	0.4 x (60)^.6 x 1.59 x 1.03 x 1.544 x		1.45		17.1
	Instrumentation			Purchase Installation	25.4 31.8
				Sub Total (1 Train)	1864.5
				3 Additional Trains	5039.6
				Total for Complex	6906.1

FORM 30650 PRINTED IN U.S.A. R1-69

PRELIMINARY CAPITAL - DETAIL SHEET THE DOW CHEMICAL COMPANY MIDLAND, MICHIGAN

SHEET 7 OF 35

PROJECT: COAL-PYRITIC SULFUR REMOVAL | JOB NUMBER: 730623

PHASE: I | CASE: Task 2 | BY: E. F. Hensley | DATE: 2-26-74 | EF NUMBER: 657

SECTION NUMBER & NAME: 500-EXTRACTION | SECTOR NUMBER & NAME:

FACTORS: BASE X ESC. X CAPACITY X QUANT. X [MATERIAL + CONDITION + COMPLEXITY] = M$(19)

ITEM	NAME OF FACILITY	QUANT.	CONSTRUCTION MATERIAL	DESCRIPTION	1975
500-V-1	Extractor	1	304	40,000 gal 13' Dia 39' Straight Side	
				F&D Top Cone Bottom Skirt Support	
				1" Insulation	
	48.0x1.544	1.0	(1.46+1.1	+0.1)	197.1
500-A-1	Agitator	1	304 Wetted Parts	50 HP Dual impellers	
	24.0x1.544	1.0	(1.07+.75	x.46)	49.8
	Instrumentation			Purchase Installation	11.6 14.5
				Sub Total (1 Train)	273.0
				3 Additional Trains	737.1
				Total for Complex	1010.1

FORM 39650 PRINTED IN U.S.A. R1-69

PRELIMINARY CAPITAL - DETAIL SHEET THE DOW CHEMICAL COMPANY MIDLAND, MICHIGAN

SHEET 8 OF 35

PROJECT: COAL-PYRITIC SULFUR REMOVAL | JOB NUMBER: 730623

PHASE: I | CASE: Task 2 | BY: E. F. Hensley | DATE: 2-26-74 | EF NUMBER: 657

SECTION NUMBER & NAME: 600-FILTRATION-DECANTATION | SECTOR NUMBER & NAME:

FACTORS → BASE X ESC. X CAPACITY X QUANT. X [MATERIAL + CONDITION + COMPLEXITY] = M$(19)

ITEM	NAME OF FACILITY	QUANT.	CONSTRUCTION MATERIAL	DESCRIPTION	1975
600-P-1 A&B	Feed Pump	2	316	4x6-10 25 HP	
	19.0x1.544	1.778	1.0		52.2
600-F-1 A-D	Filters	4	304	12'x22'	
				Dorr-Oliver Quote	
				Purchase 515.0 Erect 112.0 Piping 420.0 1047.0 419.0	
	Includes			Elect 178.5	
	Vacuum Pumps	4	Steel	Pumps 84.9	
	Filtrate Rec	4	304	1729.4	1729.4
	Filtrate Pumps	8	316	(Assume quote for 4)	
	Level Controls	4	-		
	Drum Speed Control	4	-	(Not incl in quote)	
	High & Low Pan Level Switches	4	-	(" " " ")	
600-ME-1	Screw Conveyor	1	304	20" Screw Dia 60' Total Length 4-inlets	
				1-Discharge 20 HP Drive	
	Same as 400-ME-1				17.1

FORM 30650 PRINTED IN U.S.A. R1-60

PRELIMINARY CAPITAL - DETAIL SHEET THE DOW CHEMICAL COMPANY MIDLAND, MICHIGAN SHEET 9 OF 35

PROJECT: COAL-PYRITIC SULFUR REMOVAL | JOB NUMBER: 730623

PHASE: I | CASE: Task 2 | BY: E. F. Hensley | DATE: 2-26-74 | EF NUMBER: 657

SECTION NUMBER & NAME: 600- | SECTOR NUMBER & NAME: FILTRATION-DECANTATION

FACTORS: BASE X ESC. X CAPACITY X QUANT. X [MATERIAL + CONDITION + COMPLEXITY] = MS(19)

ITEM	NAME OF FACILITY	QUANT.	CONSTRUCTION MATERIAL	DESCRIPTION	1975
600-V-1	Decanter	1	Steel Ceilcote	18000 gal #64 Lined 11'-6" Dia 23' St Side	
				F&D Heads. Lug Supports 1" Insulation	
	29.5×1.544	1.0	(1.3+1.1+0.1)		113.9
600-P-1 A&B	Forwarding Pumps	2	316	1½"×3"-10 5 HP	
	10.0×1.544	1.778			27.5
	Instrumentation			Purchase Installation	31.4 39.3
				Sub Total (1 Train)	1983.3
				3 additional Trains	5354.9
				Total for Complex	7338.2

FORM 30680 PRINTED IN U.S.A. R1-69

PRELIMINARY CAPITAL - DETAIL SHEET THE DOW CHEMICAL COMPANY MIDLAND, MICHIGAN

SHEET 10 OF 35

PROJECT: COAL - PYRITIC SULFUR REMOVAL | JOB NUMBER: 730623

PHASE: I | CASE: Task 2 | BY: E. F. Hensley | DATE: 2-26-74 | EF NUMBER: 657

SECTION NUMBER & NAME: 700- WATER WASHING | SECTOR NUMBER & NAME:

FACTORS: BASE X ESC. X CAPACITY X QUANT. X [MATERIAL + CONDITION + COMPLEXITY] = M$(19)

ITEM	NAME OF FACILITY	QUANT.	CONSTRUCTION MATERIAL	DESCRIPTION	1975
700-V-1	Water Wash Tank	1	304	50,000 gal 14'-9" Dia 39'-4" St Side	
				F&D Top Cone Bottom Skirt Support	
				1" Insulation	
	54.0 x 1.544	1.0	(1.46+1.1	+0.1)	221.8
700-A-1	Agitator	1	304 Wetted Parts	100 HP Dual Turbines	
	35.0 x 1.544	1.0	(1.0 + .75	x .46)	72.7
	Instrumentation			Purchase Installation	4.4 5.5
				Sub Total (1 Train)	304.4
				3 additional Trains	821.9
				Total for Complex	1126.3

FORM 39650 PRINTED IN U.S.A. R1-69

PRELIMINARY CAPITAL - DETAIL SHEET THE DOW CHEMICAL COMPANY MIDLAND, MICHIGAN

SHEET 11 OF 35

PROJECT: COAL - PYRITIC SULFUR REMOVAL | JOB NUMBER: 730623

PHASE: I | CASE: Task 2 | BY: E. F. Hensley | DATE: 2-26-74 | EF NUMBER: 657

SECTION NUMBER & NAME: 800 · FILTRATION - DECANTATION | SECTOR NUMBER & NAME:

FACTORS: BASE X ESC. X CAPACITY X QUANT. X [MATERIAL + CONDITION + COMPLEXITY] = M$(19)

ITEM	NAME OF FACILITY	QUANT.	CONSTRUCTION MATERIAL	DESCRIPTION	1975
800-P-1 A&B	Feed Pump	2	316	4x6-13 25 HP 1150 RPM	
	19.0 x 1.544	1.78	1.0		52.2
800-F-1 A-D	Filters	4	304	12'x22' Dorr-Oliver Quote	
	150 HP 4x 15.8 = 63.2 80 " 16x 4.9 = 78.4 10 " 4x 3.3 = 13.2 154.8 x 1.544 = 239.0			Purchase 515.0 Erect 112.0 Piping 515.0 1142.0	
	Includes Vacuum pumps Filtrate Rec	 4 4	 Steel 304	Indirect 456.8 Electrical 237.0 Pumps 169.9 2007.7	2007.7
	Filtrate Pumps Wash Rec Wash Pumps	8 4 8	316 304 316	(Assume Quote for 4) (" " " ")	
	Level controls Drum Speed control High & Low Pan	8 4	– –	(Not incl in quote)	
	Level Switches	4	–	(" " " ")	
800-ME-1	Conveyor $17.14\left(\frac{48}{60}\right)^{.6}$	1	304	20" Screw Dia 48' Long 4 inlets	15.0
	$17.14\left(\frac{40}{60}\right)^{.6}$	1.	304	1 Discharge 20" Screw Dia 40' long	15.0
				1 inlet 1 Discharge	

FORM 39650 PRINTED IN U.S.A. R1-69

PRELIMINARY CAPITAL - DETAIL SHEET THE DOW CHEMICAL COMPANY MIDLAND, MICHIGAN

SHEET 12 OF 35

PROJECT: COAL-PYRITIC SULFUR REMOVAL | JOB NUMBER: 750623

PHASE: I | CASE: Task 2 | BY: E. F. Hensley | DATE: 2-26-74 | EF NUMBER: 657

SECTION NUMBER & NAME: 800 · FILTRATION-DECANTATION | SECTOR NUMBER & NAME:

FACTORS	BASE X ESC. X CAPACITY	X QUANT. X	[MATERIAL	+	CONDITION + COMPLEXITY]	= M$(19)
ITEM	NAME OF FACILITY	QUANT.	CONSTRUCTION MATERIAL		DESCRIPTION	1975
		1	304		1 Center inlet 2 Discharge (1 Each end)	15.0
					40' long	
800 V-1	Decanter	1	304		10,000 gal 9'-6" Dia 18'-4" St side	
	20.0 x 1.544	1.0	(1.46 + 1.1		Lug supports 1" Insulation + 0.1)	82.1
800 P-2 A&B	Forwarding Pumps 11.0 x 1.544	2 1.778	316 1.0		3x4-8 10 HP - 1750 RPM	30.2
	Instrumentation				Purchase Installation	51.3 64.1
					Sub Total (1 Train)	2332.6
					3 Additional Trains	6298.0
					Total for Complex	8630.6

FORM 38450 PRINTED IN U.S.A. R1-69

PRELIMINARY CAPITAL - DETAIL SHEET THE DOW CHEMICAL COMPANY MIDLAND, MICHIGAN SHEET 13 OF 35

PROJECT: COAL - PYRITIC SULFUR REMOVAL | JOB NUMBER: 730623

PHASE: I | CASE: Task 2 | BY: E. F. Hensley | DATE: 2-26-74 | EF NUMBER: 657

SECTION NUMBER & NAME: 900- DRYING, DECANTATION, COMPACTING | SECTOR NUMBER & NAME:

FACTORS: BASE X ESC. X CAPACITY X QUANT. X [MATERIAL + CONDITION + COMPLEXITY] = M$(19)

ITEM	NAME OF FACILITY	QUANT.	CONSTRUCTION MATERIAL	DESCRIPTION	1975
900-ME-1 A&B	Turbo-Dryer	2	Steel	Wyssmont Quote	
				Purchase 700.0 Erection 140.0 Piping 100.0	
				Indirects 940.0 376.0 1316.0	1316.0
900-ME-2 A&B	Conveyors	2	Steel	Redler or Similar Dust tight Heavy Duty	
				Inclined - 35' horizontal 25' vertical Allow	50.0
900-ME-3		1	Rubber Belt	2 inlets (from 900-ME-2 A&B) 1 Discharge to	
				900-ME-4 Assumed 24" Wide Length 20 feet	
	10.0 x 1.544	1.0	1.5		23.2

FORM 39650 PRINTED IN U.S.A. R1-69

PRELIMINARY CAPITAL - DETAIL SHEET THE DOW CHEMICAL COMPANY MIDLAND, MICHIGAN

SHEET 14 OF 35

PROJECT: COAL - PYRITIC SULFUR REMOVAL | JOB NUMBER: 730623

PHASE: I | CASE: Task 2 | BY: E. F. Hensley | DATE: 2-26-74 | EF NUMBER: 657

TION NUMBER & NAME: 900 - DRYING, DECANTATION, COMPACTING | SECTOR NUMBER & NAME:

FACTORS: BASE X ESC. X CAPACITY X QUANT. X [MATERIAL + CONDITION + COMPLEXITY] = M$(19)

ITEM	NAME OF FACILITY	QUANT.	CONSTRUCTION MATERIAL	DESCRIPTION	1975
900-ME-4	Compactor	1	Steel	Rotary Disc Dravo Quote	
				Purchase 135.0 Erection 27.0 162.0	
				Indirects 65.0 227.0	227.0
900-ME-5	Bucket Elevator	1	Steel	15"x8" Buckets 120 Tons/hr Heavy Duty	
	$0.5 \times (54)^{.83} \times 1.84 \times 1.03 \times 1.544$			Dust tight Total height 54 ft 4'x6'x6' inlet chute	40.1
900-T-1	Binder Solution Tank 84 x 1.544	1 1.0	Steel 1.0	300,000 Gal API type	129.7
900-P-1 A&B	Binder Solution Pump 5.9 x 1.544	2 1.778	Ductile Iron	1 x 1½-6 1 HP - 1750 RPM TENV	16.2
900-P-2 A&B	Binder Unloading Pump 6.9 x 1.544	2 1.778	Ductile Iron	3 x 1½-10 5 HP - 1750 RPM	18.9

FORM 30630 PRINTED IN U.S.A. R1-69

PRELIMINARY CAPITAL - DETAIL SHEET THE DOW CHEMICAL COMPANY MIDLAND, MICHIGAN

SHEET 15 OF 35

PROJECT: COAL-PYRITIC SULFUR REMOVAL | JOB NUMBER: 730623

PHASE: I | CASE: Task 2 | BY: E. F. Hensley | DATE: 2-26-74 | EP NUMBER: 657

TION NUMBER & NAME: 900-DRYING, DECANTATION, COMPACTING | SECTOR NUMBER & NAME:

FACTORS: BASE X ESC. X CAPACITY X QUANT. X [MATERIAL + CONDITION + COMPLEXITY] = M$(19)

ITEM	NAME OF FACILITY	QUANT.	CONSTRUCTION MATERIAL	DESCRIPTION	1975
900-V-1	Decanter	1	Steel Crilcote #64 Lined	1000 gal 4'-6" dia 9'-2" st side	
				Lug Supports 1" Insulation	
	5.8 x 1.544	1.0	(1.3 + 1.1 + 0.1)		22.4
	Instrumentation			Purchase	19.7
				Installation	24.6
				Sub Total (1 Train)	1887.8
				3 Additional Trains	5097.1
				Total for Complex	6984.9

FORM 30650 PRINTED IN U.S.A. R1-69

PRELIMINARY CAPITAL - DETAIL SHEET THE DOW CHEMICAL COMPANY MIDLAND, MICHIGAN

SHEET 16 OF 35

PROJECT: COAL-PYRITIC SULFUR REMOVAL | JOB NUMBER: 730623

PHASE: I | CASE: Task 2 | BY: E. F. Hensley | DATE: 2-26-74 | EF NUMBER: 657

SECTION NUMBER & NAME: 1000- PRODUCT COAL HANDLING | SECTOR NUMBER & NAME:

FACTORS: BASE X ESC. X CAPACITY X QUANT. X [MATERIAL + CONDITION + COMPLEXITY] = M$(19)

ITEM	NAME OF FACILITY	QUANT.	CONSTRUCTION MATERIAL	DESCRIPTION	1975
1001 ↓ 1009	Product Coal Handling			FMC Quote	
	Electrical Controls			"	
	Concrete & Foundations			Car loading House All conveyors Silos Transfer towers	
	Tunnels & Pits			1008 conveyor	
	Field Wiring			All motors	
	Dust Suppression				
	Silo Ventilation			1006A-D Silos	
	Fire Protection				
				From Sheet #1	
				Total for complex	12,570
				Assume 30% to 1000 Sector	3770

FORM 39650 PRINTED IN U.S.A. R1-69

PRELIMINARY CAPITAL - DETAIL SHEET THE DOW CHEMICAL COMPANY MIDLAND, MICHIGAN

PROJECT: COAL-PYRITIC SULFUR REMOVAL | JOB NUMBER: 730623

PHASE: I | CASE: Task 2 | BY: E. F. Hensley | DATE: 2-26-74 | EF NUMBER: 657

SECTION NUMBER & NAME: 1100- IRON SULFATES REMOVAL | SECTOR NUMBER & NAME:

FACTORS: BASE X ESC. X CAPACITY X QUANT. X [MATERIAL + CONDITION + COMPLEXITY] = M$(19)

ITEM	NAME OF FACILITY	QUANT.	CONSTRUCTION MATERIAL	DESCRIPTION	1975
1100-F-1 A&B	Filters	2		10'x20' Rotary Vac Drum Neoprene covered Polypropylene cloth	
				Assume 90% of cost of 10'x22' per Dorr-Oliver Quote	
	125 2x14.2 = 28.4 15 4x4.2 = 16.8 10 2x3.2 = 6.4 51.6x1.544 = 79.7			Purchase 252.0 Erect 50.4 Piping 189.0 491.4	
	Includes Vacuum Pump	2	steel	Electrical 79.7	
	Filtrate Rec	2	Neoprene	Pumps 30.2 601.3	601.3.
	Filtrate Pumps	4	316	(Assume quote for 2)	
	Level Controls	2	-		
	Drum Speed Control	2	-	(Not incl in quote)	
	High & Low Pan Level Switches	2	-	(" " " ")	
1100-V-2	Reslurry Tank	1	Steel Neoprene Lined	3000 Gal 8'-0"x8'-0" str side Support Legs	
				Insulate	
	10.5x1.544		(1.45+1.1	+0.1)	43.0
1100-A-1	Agitator	1	Neoprene Covered	2 HP single Turbine	
	6.6x1.544	1.0	(1.0+.75	x.45)	13.6.

FORM 39650 PRINTED IN U.S.A. R1-63

PRELIMINARY CAPITAL - DETAIL SHEET THE DOW CHEMICAL COMPANY MIDLAND, MICHIGAN

SHEET 18 OF 35

PROJECT: COAL - PYRITIC SULFUR REMOVAL | JOB NUMBER: 730623

PHASE: I | CASE: Task 2 | BY: E. F. Hensley | DATE: 2-26-74 | EF NUMBER: 657

SECTION NUMBER & NAME: 1100 - IRON SULFATES REMOVAL | SECTOR NUMBER & NAME:

FACTORS: BASE X ESC. X CAPACITY X QUANT. X [MATERIAL + CONDITION + COMPLEXITY] = M$(19)

ITEM	NAME OF FACILITY	QUANT.	CONSTRUCTION MATERIAL	DESCRIPTION	1975
1100-P-1 A&B	Sulfate Forwarding Pump 31.0×1.544	2 1.778	316 1.0	2×3-10 60 HP @ 3500 RPM	85.1
—	Tank Truck Unloading for 98% H_2SO_4	1		Assume Tank Truck has unloading Pump	—
1100-T-2	98% H_2SO_4 Storage	1	Steel	30,000 Gal API Type 1.83 SP92 1/8" Corrosion Allowance	
	40.0 × 1.544	1.0	1.0	Flat Bottom Cone Top	61.8
1100-P-4 A&B	98% H_2SO_4 Feed Pumps 6.2×1.544	2 1.778	Ductile Iron 1.0	1×1½-6 1½ HP @ 3500 R.P.M.	17.0
1100-V-1	Evaporator	1	Titanium	5000 gal 8'-6" Dia 12'-0" St Side F&D Top	
	17.0 × 1.544	1.0	(4.7+1.1+	Cone Bottom Skirt Support Insulation 0.1)	154.9

FORM 30650 PRINTED IN U.S.A. R1-69

PRELIMINARY CAPITAL - DETAIL SHEET THE DOW CHEMICAL COMPANY MIDLAND, MICHIGAN

PROJECT: COAL - PYRITIC SULFUR REMOVAL | JOB NUMBER: 730623

PHASE: I | CASE: Task 2 | BY: E. F. Hensley | DATE: 2-26-74 | EF NUMBER: 657

SECTION NUMBER & NAME: 1100- IRON SULFATES REMOVAL

FACTORS: BASE X ESC. X CAPACITY X QUANT. X [MATERIAL + CONDITION + COMPLEXITY] = M$(19)

ITEM	NAME OF FACILITY	QUANT.	CONSTRUCTION MATERIAL	DESCRIPTION	1975
1100-P-2 A&B	Reboiler Circulating Pump	2	Titanium	14x14-22 150 HP 880 RPM	
	(1.5)^.593 x 29.0 x 1.544	1.778	4.7		475.9
1100-E-1	Reboiler	1	Titanium Tubes Steel Shell	4600 sq ft 1" Tubes 12 ga 26'lg	
	120.0 x 1.544	1.0	4.3		796.7
1100-ME-1	Water Heater (Condenser)	1	304	Ring or Jet type	
				Allow	25.0
1100-T-1	Wash Water Surge	1	Steel Red Lead Phenolic Lining TTP-86	150,000 gal API Fed Spec Type 4	
			Insulate		
	49.0 x 1.544	1.0	(1.3+0.1)		105.9

FORM 28450 PRINTED IN U.S.A. R1-69

PRELIMINARY CAPITAL - DETAIL SHEET THE DOW CHEMICAL COMPANY MIDLAND, MICHIGAN

SHEET 20 OF 35

PROJECT: COAL - PYRITIC SULFUR REMOVAL | JOB NUMBER: 730623

PHASE: I | CASE: Task 2 | BY: E. F. Hensley | DATE: 2-26-74 | EF NUMBER: 657

SECTION NUMBER & NAME: 1100 - IRON SULFATES REMOVAL | SECTOR NUMBER & NAME:

FACTORS: BASE X ESC. X CAPACITY X QUANT. X [MATERIAL + CONDITION + COMPLEXITY] = M$(19)

ITEM	NAME OF FACILITY	QUANT.	CONSTRUCTION MATERIAL	DESCRIPTION	1975
1100-E-5	Flash Steam Condenser	1	304 Tubes Steel Shell	1850 Sq ft 1170 tubes 1"x12ga x 6' No Bottom Head (Mount on 1100-T-1)	
	55.0 x 1.544	1.0	1.6		135.9
1100-P-3 A&B	Recovered Water Feed Pumps	2	316	3x4-13 30 HP-1750 RPM	
	20.5 x 1.544	1.778	1.0		56.3
1100-E-2	Sulfate Cooler	1	Titanium Tubes Steel Shell	49 sq ft 8 tubes 1"x12ga x 26'	
	3.9 x 1.544	1.0	4.3		25.9
1100-F-2	Filter	1		Same as 1100-F-1A	300.7

FORM 30650 PRINTED IN U.S.A. R1-69

PRELIMINARY CAPITAL - DETAIL SHEET THE DOW CHEMICAL COMPANY MIDLAND, MICHIGAN SHEET 21 OF 35

PROJECT: COAL-PYRITIC SULFUR REMOVAL | JOB NUMBER: 730623

PHASE: I | CASE: Task 2 | BY: E. F. Hensley | DATE: 2-26-74 | EF NUMBER: 657

SECTION NUMBER & NAME: 1100- IRON SULFATES REMOVAL | SECTOR NUMBER & NAME:

FACTORS: BASE X ESC. X CAPACITY X QUANT. X [MATERIAL + CONDITION + COMPLEXITY] = M$(19)

ITEM	NAME OF FACILITY	QUANT.	CONSTRUCTION MATERIAL	DESCRIPTION	1975
1100-ME-2	Sulfate Waste Dryer	1	304	8M Btu/hr Assume cost based on steam tube Rotary dryer	
				Heat Flux 2000 Btu/hr/sq ft 4000 sq ft Approx	
				8' dia x 40' long 90-4½" OD Tubes 4240 sq ft 3RPM	
				15HP Drive weight 110,000# Est price	
				$90,000 (steel) x 1.75 (304SS) x 1.3 (400 psi tubes) = $205000 (1970)	
				Purchase 300 Erect 60 Piping 150 510 Indirect 204 Elect 4	
	Truck Loading for waste Sulfates	1		718	718.0 10.0
	Instrumentation			Purchase Installation	56.6 70.8
				Sub Total (1 Train)	3754.4
				3 Additional Trains	10136.9
				Total for Complex	13,891.3

FORM 30650 PRINTED IN U.S.A. R1-69

PRELIMINARY CAPITAL - DETAIL SHEET THE DOW CHEMICAL COMPANY MIDLAND, MICHIGAN

SHEET 22 OF 35

PROJECT: COAL - PYRITIC SULFUR REMOVAL | JOB NUMBER: 730623

PHASE: I | CASE: Task 2 | BY: E. F. Hensley | DATE: 2-26-74 | EF NUMBER: 657

SECTION NUMBER & NAME: 1400 - DISTILLATION | SECTOR NUMBER & NAME:

FACTORS: BASE X ESC. X CAPACITY X QUANT. X [MATERIAL + CONDITION + COMPLEXITY] = M$(19)

ITEM	NAME OF FACILITY	QUANT.	CONSTRUCTION MATERIAL	DESCRIPTION	1975
1400-P-1 A&B	Feed Pump	2	316	845 gpm 155 ft 4-6-13 50 HP @ 1750 RPM	
	28.5 x 1.544	1.778	1.0		78.2
1400-F-1	Clarifying Filter	1	304	415 gpm Assume Cartridge type - 100 Tubes	
	10.0 x 1.544 x 3	1.0	1.46		67.6
1400-E-2	Feed-Overhead Exchanger	1	304 Tubes & Shell	309-1" x 12ga x 26' long 2126 sq ft	
	60.0 x 1.544	1.0	2.3		213.1
1400-E-3	Condenser	1	304 Tubes Steel Shell	87-1" x 12ga x 26' long 590 sq ft	
	21.0 x 1.544	1.0	1.6		51.9
1400-V-2	Accumulator	1	304	1400 gal 5' dia x 10' str side F&D Heads Saddle Supports	
				1" Insulation	
	8.0 x 1.544	1.0	(1.46 + 0.5 + 0.1)		26.7

FORM 39650 PRINTED IN U.S.A. R1-69

PRELIMINARY CAPITAL - DETAIL SHEET THE DOW CHEMICAL COMPANY MIDLAND, MICHIGAN

PROJECT: COAL - PYRITIC SULFUR REMOVAL | JOB NUMBER: 730623

PHASE: I | CASE: Task 2 | BY: E. F. Hensley | DATE: 2-26-74 | EF NUMBER: 657

SECTION NUMBER & NAME: 1400 - DISTILLATION | SECTOR NUMBER & NAME:

FACTORS: BASE X ESC. X CAPACITY X QUANT. X [MATERIAL + CONDITION + COMPLEXITY] = M$(19)

ITEM	NAME OF FACILITY	QUANT.	CONSTRUCTION MATERIAL	DESCRIPTION	1975
1400-V-1	Distillation Col	1	304	9' Dia - 30' Overall Ht Jacket 5' Lower Shell & Bottom Head 3. Ballast Trays	
				1" Insulation	
	75.0 x 1.544	1.0	(1.46 + 0.1 + 0.2)		203.8
1400-T-3	Sulfur Surge	1	Steel	24000 gals API Plate Coils for 266°F 1" Insulation	
	28.0 x 1.544	1.0	(1.0+0.3)		56.2
1400-P-4	Sulfur Loading Pump	1	Ductile Iron	1 x 1½ - 8 Steam Jacketed 125 psig Steam	
				7½ HP - 1750 RPM 1" Insulation	
	7.2 x 1.544	1.0	(1.0+0.5+0.2)		18.9
1400-E-4	Cooler	1	304 Tubes	267 - 1" x 12ga x 26' long 1832 sq ft	
	52.0 x 1.544	1.0	1.6		128.5
1400-T-2	Recovered Solvent Surge	1	Steel Ceilcote #64 Lined	100,000 gal API Insulate 1"	
	48.0 x 1.544	1.0	(1.3+0.1)		103.8
1400-T-1	Feed Tank			Same as 1400-T-1	103.8

FORM 30650 PRINTED IN U.S.A. R1-63

PRELIMINARY CAPITAL - DETAIL SHEET THE DOW CHEMICAL COMPANY MIDLAND, MICHIGAN

SHEET 24 OF 35

PROJECT				JOB NUMBER
COAL - PYRITIC SULFUR REMOVAL				730623
PHASE	CASE	BY	DATE	EF NUMBER
I	Task 2	E. F. Hensley	2-26-74	657

SECTION NUMBER & NAME: 1400 - DISTILLATION

SECTOR NUMBER & NAME:

FACTORS	BASE X ESC. X CAPACITY	X QUANT. X	[MATERIAL +	CONDITION + COMPLEXITY]	= M$(19)
ITEM	NAME OF FACILITY	QUANT.	CONSTRUCTION MATERIAL	DESCRIPTION	1975
1400-T-4	Solvent Makeup Tank. 10.5 x 1.544	1 / 1.0	Steel / 1.0	5000 gal API Type	16.2
	Tank Truck Unloading for Solvent	1		Assume Tank Truck has unloading pump	—
1400-P-5	Solvent Makeup Feed Pump 5.9 x 1.544	1 / 1.0	Ductile Iron / 1.0	1 x 1½ - 6 1 HP 1750 RPM	9.1
1400-E-1	Reboiler 48.0 x 1.544	1 / 1.0	304 Tubes (1.6+0.1)	540 - 1" x 12 Ga x 12 ft lg 1700 sq ft 1" Insulation	126.0
1400-P-3 A&B	Recovered Solvent Feed Pump 14.0 x 1.544	2 / 1.778	316 / 1.0	3 x 4 - 13. 15 HP @ 1750 RPM	38.4
	Instrumentation			Purchase Installation	40.3 50.4
				Sub Total (1 Train)	1332.9
				3 Additional Trains	3598.8
				Total for Complex	4931.7

FORM 30630 PRINTED IN U.S.A. R1-69

PRELIMINARY CAPITAL - DETAIL SHEET THE DOW CHEMICAL COMPANY MIDLAND, MICHIGAN SHEET 25 OF 35

PROJECT: COAL-PYRITIC SULFUR REMOVAL | JOB NUMBER: 730623

PHASE: I | CASE: Task 2 | BY: E. F. Hensley | DATE: 2-26-74 | EF NUMBER: 657

SECTION NUMBER & NAME: 1500-VENT SCRUBBING | SECTOR NUMBER & NAME:

FACTORS: BASE X ESC. X CAPACITY X QUANT. X [MATERIAL + CONDITION + COMPLEXITY] = M$(19)

ITEM	NAME OF FACILITY	QUANT.	CONSTRUCTION MATERIAL	DESCRIPTION	1975
1500-V-1	Scrubber Tower (20.0 + 2.4) × 1.544	1 / 1.0	Steel / 1.0	3' dia × 23'-6 overall 20'-1" steel Ring Packing	34.6
1500-V-2	Surge-Decanter	1	Steel	10,000 gal 10' Dia 18' Str side Saddle Supports Perforated Baffle Weir	
	25.0 × 1.544	1.0	(1.0 + 0.5	+ 0.3)	69.5
1500-P-1 A&B	Circulating Pump 6.9 × 1.544	2 / 1.778	Ductile Iron / 1.0	1 × 1½-8 5HP-1750 RPM	18.9
1500-E-1	Cooler 8.0 × 1.544	1 / 1.0	Steel / 1.0	150 sq ft 48-1" OD × 11 Ga 12' long	12.4
1500-P-2 A&B	Recovered Naphtha Pump 5.9 × 1.544	2 / 1.778	Ductile Iron / 1.0	1 × 1½-8 1 HP-1750 RPM	16.2

FORM 28650 PRINTED IN U.S.A. R1-68

PRELIMINARY CAPITAL - DETAIL SHEET

THE DOW CHEMICAL COMPANY
MIDLAND, MICHIGAN

SHEET 26 OF 35

PROJECT: COAL-PYRITIC SULFUR REMOVAL

JOB NUMBER: 730623

PHASE: I | CASE: Task 2 | BY: E. F. Hensley | DATE: 2-26-74 | EF NUMBER: 657

STATION NUMBER & NAME: 1500-VENT SCRUBBING

SECTOR NUMBER & NAME:

FACTORS: BASE X ESC. X CAPACITY X QUANT. X [MATERIAL + CONDITION + COMPLEXITY] = MS(19)

ITEM	NAME OF FACILITY	QUANT.	CONSTRUCTION MATERIAL	DESCRIPTION	1975
	Instrumentation			Purchase	9.7
				Installation	12.2
				Sub Total (1 Train)	173.5
				3 Additional Trains	468.5
				Total for complex	642.0

FORM 38450 PRINTED IN U.S.A. R1-69

PRELIMINARY CAPITAL - DETAIL SHEET THE DOW CHEMICAL COMPANY MIDLAND, MICHIGAN

PROJECT: COAL-PYRITIC SULFUR REMOVAL | JOB NUMBER: 730623

PHASE: I | CASE: Task 2 | BY: E.F. Hensley | DATE: 2-26-74 | EF NUMBER: 657

SECTION NUMBER & NAME: 1900 - Building & | SECTOR NUMBER & NAME: Misc

FACTORS: BASE X ESC. X CAPACITY X QUANT. X [MATERIAL + CONDITION + COMPLEXITY] = M$(19)

ITEM	NAME OF FACILITY	QUANT.	CONSTRUCTION MATERIAL	DESCRIPTION	1975
	Control Room			20' x 60' - 1200 SF	
	.01483 x 1200 x 3.0				53.4
	Motor Control Center			20' x 60' 1200 SF	
	.01483 x 1200 x 1.0				17.8
	Plant Office			20' x 15' 300 SF	
	.01483 x 300 x 3.0				13.3
	Plant Laboratory			20' x 40' 800 SF	
	.01483 800 x 4.5				53.4
	Locker, Lunch, & Sanitary			20' x 25' 500 SF	
	.01483 x 500 x 3.5				26.0
	Total			4000 SF	
	Above located on second floor of each process train.				
	Process Train Structure			Ground Floor 80' x 340' 2nd " 80 x 340 3rd " 80 x 340 4th " 80 x 340 5th " 20 x 240 5th " 80 x 100 6th " 20 x 240 Total 126,400 □'	
	$\frac{817.2 \times 1.915}{126,400} \times \left(\frac{17.685}{14}\right)^{.53} =$	.01483			
	.01483 x (126,400 - 4000) x 1.5				2723.1

FORM 39650 PRINTED IN U.S.A. R1-69

PRELIMINARY CAPITAL - DETAIL SHEET

THE DOW CHEMICAL COMPANY
MIDLAND, MICHIGAN

SHEET 28 OF 35

PROJECT				JOB NUMBER
COAL - PYRITIC SULFUR REMOVAL				730623
PHASE	CASE	BY	DATE	EF NUMBER
I	Task 2	E. F. Hensley	2-26-74	657

SECTION NUMBER & NAME: 1900 - Bldg & Misc

SECTOR NUMBER & NAME:

FACTORS: BASE X ESC. X CAPACITY X QUANT. X [MATERIAL + CONDITION + COMPLEXITY] = M$(19)

ITEM	NAME OF FACILITY	QUANT.	CONSTRUCTION MATERIAL	DESCRIPTION	
	Tank Farm Dike			60'x160'x3' high Impervious floor Concrete walls	
	$\frac{60 \times 160}{1000} \times 0.5 \times 2.4 \times 1.3 \times \frac{1.915}{1.375}$				39.4
	$\frac{(60+160)}{1000} \times 2 \times 3 \times \frac{8}{12} \times 6.24 \times 1.3 \times \frac{1.915}{1.375}$				9.9
				Sub Total (1 Train)	2936.3
				3 Additional Trains	7928.0
				Total for Complex	10,864.3

FORM 39650 PRINTED IN U.S.A. R1-69

PRELIMINARY CAPITAL - DETAIL SHEET THE DOW CHEMICAL COMPANY MIDLAND, MICHIGAN SHEET 29 OF 35

PROJECT: COAL-PYRITIC SULFUR REMOVAL | JOB NUMBER: 750623

PHASE: I | CASE: Task 2 | BY: E. F. Hensley | DATE: 2-26-74 | EF NUMBER: 657

SECTION NUMBER & NAME: 2000-UTILITIES | SECTOR NUMBER & NAME:

FACTORS: BASE X ESC. X CAPACITY X QUANT. X [MATERIAL + CONDITION + COMPLEXITY] = M$(19)

ITEM	NAME OF FACILITY	QUANT.	CONSTRUCTION MATERIAL	DESCRIPTION	1975
2100	Steam Plant	1	Std	1,350,000 #/hr 3 Boilers 450,000#/hr 450 psig 500°F	
				Water Treating for 500,000#/hr Electrostatic Precipitators	
				Coal fired Overhead Distribution to Process Units,	
	$37.61 \times (1350)^{.75} \times 1.544 \times 1.2$			Utilities, & Bldgs. Personnel facilities for utilities personnel	15,519.7
2200	Water Supply	1		U.S. Gpm Concrete Meter Pit Meters Allow	25.0
2201	Process Water System			Underground Distribution System to process units	
				& Utility Facilities See Process Flow Sheet #12 and	
				Plot Plan Allow	75.0

FORM 39650 PRINTED IN U.S.A. R1-69

PRELIMINARY CAPITAL - DETAIL SHEET THE DOW CHEMICAL COMPANY MIDLAND, MICHIGAN

PROJECT: COAL - PYRITIC SULFUR REMOVAL | JOB NUMBER: 730623

PHASE: I | CASE: Task 2 | BY: E. F. Hensley | DATE: 2-26-74 | EF NUMBER: 657

SECTION NUMBER & NAME: 2000 - UTILITIES | SECTOR NUMBER & NAME:

FACTORS: BASE X ESC. X CAPACITY X QUANT. X [MATERIAL + CONDITION + COMPLEXITY] = M$(19)

ITEM	NAME OF FACILITY	QUANT.	CONSTRUCTION MATERIAL	DESCRIPTION	1975
2202	Potable Water System	1	Std	Meter Backflow Prevention Underground Distribution	
				to Process Units & Buildings, utilities See Process Flow Sheet	
				#12 & Plot Plan Allow	25.0
2203	Fire Protection System	1	Std	5,000,000 gallon Pond - Concrete Electric Driven Fire	500.0
	(18) .593 x 29.0 x 1.544			Pumps - 22,000 gpm	248.6
	(8) .593 x 29 x 1.544 x 1.2			Diesel Driven Fire Pumps 10,000 gpm	184.4
	29.0 x 1.544			Both at 100 psig Jockey pump 125 psig	44.8
				All pumps automatic start on pressure drop.	
				Underground Distribution to Process Units &	
				Buildings & utilities	200.0

FORM 3450 PRINTED IN U.S.A. R1-68

PRELIMINARY CAPITAL - DETAIL SHEET THE DOW CHEMICAL COMPANY MIDLAND, MICHIGAN

PROJECT				JOB NUMBER
COAL - PYRITIC SULFUR REMOVAL				730623
PHASE	CASE	BY	DATE	EF NUMBER
I	Task 2	E. F. Hensley	2-26-74	657
SECTION NUMBER & NAME		SECTOR NUMBER & NAME		
2000 - UTILITIES				

FACTORS: BASE X ESC. X CAPACITY X QUANT. X [MATERIAL + CONDITION + COMPLEXITY] = M$(19)

ITEM	NAME OF FACILITY	QUANT.	CONSTRUCTION MATERIAL	DESCRIPTION	1975
2204	Cooling Tower Water System	1	Std	100,000 U.S. gpm 60 psig Circulating pumps	
				with 25% minimum spare capacity	
				Water Treating, automatic control	
				Makeup from water supply with	
				controls. Blowdown control	
				based on solids	
				Pumps & Fans for 2300 V · 3 Ph - 60 cy	
				Underground	
				distribution to Process units,	
				Utilities, & Bldgs	
	700.0 x 1.544 x 1.3				1,405.0

FORM 30180 PRINTED IN U.S.A. R1-69

PRELIMINARY CAPITAL - DETAIL SHEET THE DOW CHEMICAL COMPANY MIDLAND, MICHIGAN

SHEET 32 OF 35

PROJECT				JOB NUMBER
COAL - PYRITIC SULFUR REMOVAL				730623
PHASE	CASE	BY	DATE	EF NUMBER
I	Task 2	E. F. Hensley	2-26-74	657

SECTION NUMBER & NAME: 2000 - UTILITIES

SECTOR NUMBER & NAME:

FACTORS: BASE X ESC. X CAPACITY X QUANT. X [MATERIAL + CONDITION + COMPLEXITY] = M$(19)

ITEM	NAME OF FACILITY	QUANT.	CONSTRUCTION MATERIAL	DESCRIPTION	1975
2300	Oxygen/Nitrogen Plant		Std	Complete "package" Plant for 26 Tons/hr O_2	
				99.5% pure 160psig 8000 SCFH N_2 99.9% pure 40psig	
	$5300 \times \left(\frac{624}{500}\right)^{.72} \times \frac{1.544}{1.404}$ 160 psig Add 6% N_2 Product Add 3% Add for "Buget Quote	10%	6800 400 200 680 8080		8,080
	Oxygen Distribution			Overhead Distribution to Process units Allow	30.0
	Nitrogen Distribution			Overhead Distribution to process units & Coal handling Allow	20.0

FORM 30000 PRINTED IN U.S.A. R1-69

PRELIMINARY CAPITAL - DETAIL SHEET THE DOW CHEMICAL COMPANY MIDLAND, MICHIGAN SHEET 33 OF 35

PROJECT				JOB NUMBER
COAL - PYRITIC SULFUR REMOVAL				730623
PHASE	CASE	BY	DATE	EF NUMBER
I	Task 2	E. F. Hensley	2-26-74	657

...TION NUMBER & NAME	SECTOR NUMBER & NAME
2000 - UTILITIES	

FACTORS: BASE X ESC. X CAPACITY X QUANT. X [MATERIAL + CONDITION + COMPLEXITY] = M$(19)

ITEM	NAME OF FACILITY	QUANT.	CONSTRUCTION MATERIAL	DESCRIPTION	1975
2400	Instrument Air system	1	Std	2300 SCFM 100psig Minus 40° Dewpoint Compressors	
				Minimum 25% spare capacity Fully automatic	
				Reactivation Intake Filters After Coolers	
				Receivers Overhead Air Distribution to	
				Process Units, Utilities, & Bldgs. Assume Location at	
	$M Esc Dist 180 x 1.544 x 1.3			Steam Plant.	361.3
2500	Electrical			Assume Substation by Power Company 13.8KV	—
	Mft $/ft Ind Esc 4.0 x 15 x 1.3 x 1.544	4000 ft		13.8 KV Distribution to Transformer Stations	120.0
			KVA	13.8KV/2300/440 Transformer stations at	
		1	15,000	O_2 Plant	
		5	7500	Process Trains & Cooling Tower	
	MKVA [illegible] Indirect Escallation	2	500	Adm, Shop	
		3	3000	Crusher, Steam & Air, Fire Pumps	
		2	750	Car Dumping, Car Loading	
		13	64000		
	64 x 11 x 1.3 x 1.544				1,413.1
				Total for Complex	28,251.8

FORM 30680 PRINTED IN U.S.A. R1-69

PRELIMINARY CAPITAL - DETAIL SHEET THE DOW CHEMICAL COMPANY MIDLAND, MICHIGAN

SHEET 34 OF 35

PROJECT: COAL - PYRITIC SULFUR REMOVAL | JOB NUMBER: 730623

PHASE: I | CASE: Task 2 | BY: E. F. Hensley | DATE: 2-26-74 | EF NUMBER: 657

SECTION NUMBER & NAME: 3000 - SITE DEVELOPMENT & GENERAL | SECTOR NUMBER & NAME:

FACTORS: BASE X ESC. X CAPACITY X QUANT. X [MATERIAL + CONDITION + COMPLEXITY] = M$(19)

ITEM	NAME OF FACILITY	QUANT.	CONSTRUCTION MATERIAL	DESCRIPTION	1975
	Site 50 × 2.0			Assumed 31 Acres Minimum. Develop 1320' × 1020' Allow 50 Acres	100.0
	Site clearance $/SY Ind ESC 150 × .15 × 1.3 × 1.915			31 acres 150M SY yds	56.0
	Rough Grade & Leveling 150 × (.44 + .31) × 1.3 × 1.915			31 Acres 150M SY yds	280.1
	Fences, Gates, Gate houses (4.68 × 5.93 + 9 × .150) × 1.3 × 1.915			Per Plot Plan 4680 Lin ft 9 gates	72.5
	Roads, Parking, Surfacing Landscaping (11 × 7.87 + 48 × .58 + 24 × 1.70) × 1.3 × 1.915			Per Plot Plan 5000 ft Roads 11 MSY 10 acres surfacing 48 MSY 5 acres Landscaping 24 MSY	386.4
	R.R Tracks 3.96 × 26.25 × 1.3 × 1.915	3960'		Per Plot Plan 3 Tracks within site 1320' long each Assume RR owns track outside of site.	258.8
	RR Unloading station 7.5 × 1.544	1			11.6
	Track/Truck Scale	1		Allow	60.0

FORM 39650 PRINTED IN U.S.A. R1-69

PRELIMINARY CAPITAL - DETAIL SHEET

THE DOW CHEMICAL COMPANY
MIDLAND, MICHIGAN

SHEET 35 OF 35

PROJECT: COAL - PYRITIC SULFUR REMOVAL

JOB NUMBER: 730623

PHASE: I | CASE: Task 2 | BY: E. F. Hensley | DATE: 2-26-74 | EF NUMBER: 657

SECTOR NUMBER & NAME: 3000 - SITE DEVELOPMENT & GENERAL

FACTORS: BASE X ESC. X CAPACITY X QUANT. X [MATERIAL + CONDITION + COMPLEXITY] = M$(19)

ITEM	NAME OF FACILITY	QUANT.	CONSTRUCTION MATERIAL	DESCRIPTION	1975
	Administration Building			Assume 24,000 sq ft "administration quality" with cafeteria, office	
	240.0 x 1.915 x 4.0			equipment, furniture engineering & Drafting Telephone & Teletype	1838.4
	Shop/Stores			Assume 60,000 sq ft - "shop & whse quality" with	
	470 x 1.915 (0.5 x 2.1 +	0.5 x	1.1)	"Standard" shop, Stores, & Warehouse equipment.	1440.1
	Telephone System			Assume equipment installed & maintained by telephone co.	—
				Total for Complex	4,503.9

FORM 38850 PRINTED IN U.S.A. R1-69

10.7 ECONOMICS

10.7.1. Manpower Requirements

Table 27. JOB LISTINGS BY DEPARTMENT, SECTION AND JOB TITLE OR FUNCTION
(Secondary function in parentheses)

Administration		
Plant Manager	1	
Admin. Assistant (Ecology)	1	
Senior Secretary (Public Relations)	1	
Supervisor, Accounting and Purchasing	1	
Senior Accountant (Office Manager)	1	
Accountants	2	
Purchasing Agents	2	
Secretaries (Receptionists)	3	
Traffic Manager	1	
Traffic Ass't, Rail Equipment Supervisor	2	
Teletype Operator, Secretary (Plant Phone)	2	
Industrial Relations Manager	1	
Labor Relations, Employment	2	
Safety Engineer, Security Officer (Fire Chief)	1	
Plant Guards, 3/shift (Indus. Hygiene, Firemen)	12	
TOTAL, Administration		33

The following job listings were developed by Process Engineering and extended after consultation with N. W. Miller, Dow Michigan Division Plant Engineering, Chlor-Alkali Section, and H. E. Chinworth, Dow Plant, Ludington, Michigan.

Production

Production Manager and Secretary		2
Maintenance, Service and Development Engineers		4
Coal Receiving and Unloading, day shift		2
Coal Crushing and Pulverizing, 3/shift		12
Coal Loading, Misc. Handling, Yard Work		4
Process Superintendents	1/train	4
Production Engineers (Dev.)	1/train	4
Process Foremen	1/train	4
Clerks, Janitors	2/train	8
Operating Personnel		184

(Example duties are given in the next table.)

Job	No. per shift per train	No. for 4 trains
Foremen	1	16
Control Operators	1	16
Reactor Operators	2	32
Filter Operators	2	32
Dryer Operators	2	32
Extractor Operators	2	32
Waste Sulfate Operators	1	16
Spare Operators		8

TOTAL, Production	228

Services

Engineering

Plant Engineer and Secretary	2
Engineers--Process, Mechanical, Civil, Electrical/Instrument	6
Project Engineers (Development)	4
Draftsmen	4

Quality Control			
Director and Secretary		2	
Chemists and Chemical Engineers		4	
Laboratory Technicians		16	
Utilities			
Utilities Manager and Office Ass't		2	
Superintendents and Assistants for Steam Plant, Oxygen Plant, Water Supply and Treatment, Cooling Towers, Waste Control		6	
Power Specialist, Maintenance Foreman, Shift Supervisors		6	
Operating Personnel 4/shift, Spare, Janitor		18	
Service Section			
Garage Supt., Warehouse Supt., Foreman		3	
Mechanics, Drivers, Equipment Operators		10	
Clerks		3	
Laborers, Janitors		12	
TOTAL, Services			98
TOTAL, Administration, Production, Serv.			359
Maintenance			
Maintenance Manager and Office Assistant		2	
Supervisors and Engineers		5	
Scheduling and Stock Clerks (Orderers)		5	
Foremen and Crew Leaders		8	
Journeymen and Helpers, Other Maintenance		150	
Instrument Men	20		
Oilers	10		
Plant Mechanics	8		
Electricians	12		
Pipe Fitters and Coverers, Plumbers	10		

Machinists, Bench Repairmen	6	
Welders, Boilermakers, Tinsmiths	18	
Millwrights, Riggers	17	
Masons	6	
Carpenters	8	
Painters, Sandblast Men	12	
Road and Yard Crew	16	
Track Maintenance	7	
TOTAL, Maintenance		170
TOTAL, All Departments		529

Table 28. EXAMPLE DUTIES OF PRODUCTION OPERATING PERSONNEL

For each train and on each shift there are a number of duties for which someone must be available and responsible. Examples of these are given below, following a listing of the major equipment items in a given operator's area of responsibility[27]. These are for the 184 Operating Personnel from Table 27.

Foreman 1/shift

a. Supervise and schedule operating personnel.

b. Be responsible for safety, quality, production, maintenance, and housekeeping.

c. Write operating instructions and train personnel.

d. Schedule and conduct safety meetings. Write and maintain safety procedures and check lists.

e. Transmit information to operating employees and to supervision.

f. Schedule maintenance, communicate problems and maintain a log of maintenance details.

g. Request and oversee ordering of materials and supplies.

Control Operator 1/shift

a. Monitor all indicating charts, meters, indicators, and lights on the master control panel.

b. Communicate control needs and conditions, and maintenance needs to foreman and operators as necessary. Direct operators.

c. Maintain log

d. Communicate with coal crushing and pulverizing crew, coal loading crew, and services personnel. Anticipate and initiate changes in control levels, and coordinate start-ups, changes, and shut-downs relating to these non-process personnel as well as changes occurring within the process train.

Reactor Operators 2/shift

Equipment

100 ME-1	Bucket Elevator
100 V-1	Mixer
Agitator Pump Absorber	
200 R-1 A-K	Reactors
200 E-1	Cooler

Duties

a. Start elevator, mixer, pump

b. Switch to spare pump

c. Valve in absorber, reactors, cooler

d. Prepare equipment for maintenance

e. Shut down equipment for load variations

f. Start up equipment for load variations

g. Check operation, make field readings

h. Take samples

i. Adjust packing, tighten leaks

j. Report to Control Operator

k. Coordinate with Filter Operator

l. Coordinate side stream of coal and iron sulfate to and from iron sulfate removal step

m. Clean area

Filter Operators 2/shift

Equipment

400 F-1A-D	Drum Filters
Vacuum pumps Receivers Pumps	
400 ME-1	Conveyor
600 P-1	Pump
600 F-1A-D	Drum Filters
Vacuum pumps Receivers Pumps	
600 ME-1	Conveyor
800 F-1A-D	Drum Filters
Vacuum pumps Receivers Pumps	
800 ME-1	Conveyor
800 V-1 & 800 P-2	Filtrate Decanter & Pump

Duties

a. Start up filters, vac. pumps, pumps, reslurry tank
b. Shut down filters, vac. pumps, pumps, reslurry tank
c. Switch to spare pump
d. Prepare equipment for maintenance
e. Check equipment
f. Take field readings
g. Get samples
h. Coordinate with other operators
i. Wash filters
j. Clean area
k. Unplug lines

Dryer Operators 2/shift

Equipment

900 ME-1A, 1B	Dryers
Fans	
Ducts	
Coolers	
900 ME-2A, 2B	Conveyors
900 ME-3	Conveyor
900 ME-4	Compactor
900 T-1	Binder Tank
900 P-1, P-2	Pumps
900 ME-5	Elevator

Duties

a. Start up dryer
b. Shut down dryer
c. Prepare equipment for maintenance
d. Switch pumps
e. Check equipment
f. Take samples
g. Coordinate with other operators
h. Start up & shut down compactor
i. Attention to equipment operation
j. Take field readings
k. Clean area

Extractor Operators 2/shift

Equipment

500	V-1 & A-1	Extractor with Agitator
700	V-1	Water Wash Tank w/Agitator
	Pumps Decanters	
1400	T-1, P-1	Evaporator Feed Tank and Pump
1400	F-1	Filter
1400	V-1	Distillation column
1400	E-1, E-2, E-3	Reboiler, Interchanger, Condenser
1400	V-2	Accumulator
1400	E-4	Cooler
1400	T-2, T-4	Solvent Surge and Storage
	Pumps	
1500	V-1, V-2	Scrubber and Decanter
1500	E-1	Cooler
	Pumps Tracing System (Dowtherm®* SR-1)	

Duties

a. Operate, shut down, start up, check equipment

b. Take field readings, get samples

c. Switch pumps, prepare equipment for maintenance

d. Attention to operation

e. Coordinate with other operators

f. Clean area

g. Make periodic inspections of sulfur storage tank 1400 T-3 and loading pump 1400 P-4. Prime responsibility for these will be with truck driver who hauls sulfur.

*Trademark of The Dow Chemical Company.

Waste Sulfate Operators 1/shift

Equipment

1100 T-2	Sulfuric Acid Storage Tank
1100 F-1	Filter
1100 V-2	Slurry Tank w/Agitator
1100 V-1	Evaporator
1100 E-1	Reboiler
Pumps Cooler, Condenser Water Heater	
1100 T-1	Water Surge Tank
1100 F-2	Filter
1100 ME-2	Sulfate Waste Dryer

Duties

a. Operate, start up, & shut down equipment

b. Prepare equipment for maintenance

c. Take samples, get field readings

d. Clean area

e. Monitor storage and loading of solid waste into trucks (Waste hauling truck driver will load truck.)

10.7.2 Computer Printout for Economics Program

INPUT DATA

```
UEEP       11      PYRITIC SULFUR FROM COAL,(SO4)  1302  PENN.,W. VA.   01
          NEKERVIS   TON                          50                     02
1. BASE CASE, 95% SULFUR REMOVED FROM ALL OF THE COAL                    04
2. COAL FEED  RATE IS 122 TONS/HR, PRODUCT: 104.8(PER TRAIN,DRY)         6
3. SEE CHAPTER 5, FINAL REPORT FOR OTHER ASSUMPTIONS AND BASES           8
   CLEANED COAL,  1%  S 28.00 24.00 33.00    3300.0 1    1       3      25
     14     1.1701RCOAL RECVG     8.80          8.80                    40
            0.0801RASH/COAL LOSS .0001         .0001                    41
      1      .0481ROXYGEN                      .0001                    42
     -1    -0.1401RNITROGEN        0.70         0.70                    43
     301200.00101RCHEM AGT,CWT     50.0        50.0                     45
      5    0.01601RH2SO4          36.0         36.0                     46
     -7    -.015 1RSULFUR           12.0       12.00                    47
      5    0.00121RNAPHTHA        45.0         45.00                    48
        88  27.02LMANAGEMENT                   32000                    49
        80  68.02LTECHNICAL                    23000                    50
        58 253.02LOPERATING                    17000                    51
        90  11. 2LCLERICAL                     12000                    52
            4.004MMAINTENANCE    0.2     0.0   <1.0                     53
       120 0.7501UWATER,M GAL    0.009         .011                     54
       120 54.001UPOWER,AC KWH    .010         .012                     55
      3      .0901UFUEL COAL                   .0001                     56
            0.15 1XREFUSE,TONS    4.50         5.00                     58
            0.3401RBINDER,CWT     5.00          5.00                    60
                0 OOVERHEAD                                              70
               003ERESEARCH                                              71
              2703GG & A              0  .02    1.00.3300     00.3333   72
              2503TM & S              0     0     0     0     0  1.00   73
              7.05CCASH & ACC.                          0  1.00  1.00   74
              2.04IINS. & TAXES       0     0   1.0     0     0     0   75
              0003SSELLING                                               77
 13900 3    1   1                     0          20                      89
  4900 4    1   1                     1          25                      90
 22200 4    1   1                     1          20                      91
  9000 3    1   1                     0          20                      92
 95900 3    1   1                     0          10                      93
   100 5    1   1                     1          51                      94
   000 3    1   1                     1          15                      95
```

INPUT DATA

```
     B   11 0 0 PYRITIC SULFUR FROM COAL,(SO4)  1302  PENN.,W. VA.     1
 8 30 74 NEKERVIS   TON 0 0 0 0 0 0 0 0 0 0 50.0 ECONOMIC EVALUATION    2
1. BASE CASE, 95% SULFUR REMOVED FROM ALL OF THE COAL                   4
2. COAL FEED  RATE IS 122 TONS/HR, PRODUCT: 104.8(PER TRAIN,DRY)        6
3. SEE CHAPTER 5, FINAL REPORT FOR OTHER ASSUMPTIONS AND BASES          8
  0CLEANED COAL,  1%  S28.00024.00033.000      3300 1    1   0   3    25
   0  3100 1.1701RCOAL RECVG      8.800 0.0   8.800 0.0   0.0   0.0   040
   0  0100 0.0801RASH/COAL LOSS   0.001 0.0   0.000 0.0   0.0   0.0   041
   0  1100 0.0481ROXYGEN          0.0   0.0   0.000 0.0   0.0   0.0   042
   0 -1100-0.1401RNITROGEN        0.700 0.0   0.700 0.0   0.0   0.0   043
   0 30120 0.0011RCHEM AGT,CWT   50.000 0.0  50.000 0.0   0.0   0.0   045
   0  5100 0.0161RH2SO4          36.000 0.0  36.000 0.0   0.0   0.0   046
   0 -7100-0.0151RSULFUR         12.000 0.0  12.000 0.0   0.0   0.0   047
   0  5100 0.0011RNAPHTHA        45.000 0.0  45.000 0.0   0.0   0.0   048
   0  0 88  27.02LMANAGEMENT          0     0 32000     0     0     0 049
   0  0 80  68.02LTECHNICAL           0     0 23000     0     0     0 050
   0  0 58 253.02LOPERATING           0     0 17000     0     0     0 051
   0  0 90  11.02LCLERICAL            0     0 12000     0     0     0 052
   0  0  0  4.004MMAINTENANCE     0.200 0.0   1.000 0.0   0.0   0.0   053
   0  0120 0.7501UWATER,M GAL     0.009 0.0   0.011 0.0   0.0   0.0   054
   0  012054.0001UPOWER,AC KWH    0.010 0.0   0.012 0.0   0.0   0.0   055
   0  3100 0.0901UFUEL COAL       0.0   0.0   0.000 0.0   0.0   0.0   056
   0  0100 0.1501XREFUSE,TONS     4.500 0.0   5.000 0.0   0.0   0.0   058
   0  0100 0.3401RBINDER,CWT      5.000 0.0   5.000 0.0   0.0   0.0   060
   0  0  0  0.0 4OOVERHEAD        0.200 0.087 1.000 1.217 0.0   1.2171470
   0  0  0  0.0 3ERESEARCH        0.200 0.086 1.000 1.200 0.0   1.2001471
   0  0  0270.003GG & A           0.0   0.020 1.000 0.330 0.0   0.333 072
   0  0  0250.003TM & S           0.0   0.0   0.0   0.0   0.0   1.000 073
   0  0  0  7.005CCASH & ACC.     0.0   0.0   0.0   0.0   1.000 1.000 074
   0  0  0  2.004IINS. & TAXES    0.0   0.0   1.000 0.0   0.0   0.0   075
   0  0  0  0.0 3SSELLING         0.200 0.026 1.000 0.367 0.0   0.3671477
 13900 3   1   1   11      0  9     0    0 18  20        0          089
  4900 4   1   1   12      0 20     1    0 18  25        0          090
 22200 4   1   1   12      0 20     1    0 18  20        0          091
  9000 3   1   1   11      0  9     0    0 18  20        0          092
 95900 3   1   1   11      0  9     0    0 18  10        0          093
   100 5   1   1   11      0  9     1    0 18  51        0          094
     0 3   1   1   11      0  9     1    0 18  15        0          095
   0 48.0  0.0    0    0   14   12    0   20    1   11    0    9    1 99
   0  0  0  0.0 7LLABOR ASSESS.  0.200 0.0   1.000 0.0   0.0   0.0   076
```

BASES

AREA: U.S.
PROJECT NO.: 1302
LOCATION: PENN.,W. VA.

DEPARTMENT: ECONOMIC EVALUATION
EVALUATOR: NEKERVIS
DATE: 8/30/74

PYRITIC SULFUR FROM COAL,(SO4)

1. BASE CASE, 95% SULFUR REMOVED FROM ALL OF THE COAL

2. COAL FEED RATE IS 122 TONS/HR, PRODUCT: 104.8(PER TRAIN,DRY)

3. SEE CHAPTER 5, FINAL REPORT FOR OTHER ASSUMPTIONS AND BASES

ECONOMIC PROFILE

AREA: U.S.
PROJECT NO.: 1302 DEPARTMENT: ECONOMIC EVALUATION
LOCATION: PENN.,W. VA. EVALUATOR: NEKERVIS
CAPACITY: 3300 M TON/YR DATE: 8/30/74

PYRITIC SULFUR FROM COAL,(SO4)

PRODUCTS	M TON/YR	$/TON	BY-PRODUCTS	M TON/YR	$/TON
CLEANED COAL	3300	28.0000	NONE	0	0.0
TOTAL PROD.	3300	28.0000			

BASES:
1. BASE CASE, 95% SULFUR REMOVED FROM ALL OF THE COAL

2. COAL FEED RATE IS 122 TONS/HR, PRODUCT: 104.8(PER TRAIN,DRY)

3. SEE CHAPTER 5, FINAL REPORT FOR OTHER ASSUMPTIONS AND BASES

	COST ESTIMATE				CAPITAL ESTIMATE			
	U.R.	U.COST	$/TON	M$/YR	M$FIXED	M$ WORK	TOTAL	$/U./YR
COAL RECVG	1.170	8.8000	10.2960	33977	0	0	0	0.0
ASH/COAL LOS	0.080	0.0001	0.0000	0	0	0	0	0.0
OXYGEN	0.048	0.0001	0.0000	0	0	0	0	0.0
OTHER R.M.			2.1020	6937	0	0	0	0.0
TOTAL R.M.			12.3980	40913	0	0	0	0.0
LABOR			2.0791	6861	0	0	0	0.0
MAINTENANCE			1.7697	5840	0	0	0	0.0
UTILITIES			0.6563	2166	0	0	0	0.0
DEPR. & DFC			3.6494	12043	146000	0	146000	44.2424
TAXES & MISC			1.6348	5395	0	250	250	0.0758
R.M. INV.			0.0	0	0	334	334	0.1011
IN-PROC. INV			0.0	0	0	140	140	0.0424
TOTAL BULK			22.1872	73218	146000	723	146723	44.4616
TOTAL PLANT			22.1872	73218	146000	723	146723	44.4616
G AND A			0.0818	270	89	1	90	0.0273
CASH & ACC.			0.0	0	0	6468	6468	1.9600
INV FOR SALE			0.0	0	0	503	503	0.1524
TOTAL FOR SALE			22.2690	73488	146089	769	5153784	46.6012

PROFIT SUMMARY AT CAPACITY

	M$/YR	$/TON	
NET SALES	92400	28.0000	P
COST FOR SALE	73488	22.2690	C
PROFIT BT	18912	5.7310	T
PROFIT AT @48%,	9834	2.9801	
DEPREC. TOTAL	12048	3.6510	R
			O
			I
			B
			T

PROFIT RATIOS

	B/T	A/T
PCT ROI	12.3	6.4
PCT ROS	20.5	10.6
TURNOVER	0.601	

NET SALES $/TON

PLANT AND TOTAL COST ESTIMATE

AREA: U.S.
PROJECT NO.: 1302 DEPARTMENT: ECONOMIC EVALUATION
LOCATION: PENN.,W. VA. EVALUATOR: NEKERVIS
CAPACITY: 3300 M TON/YR DATE: 8/30/74
PYRITIC SULFUR FROM COAL,(SO4)

	UNIT RATIO	M UNITS PER YEAR	COST PER UNIT	COST PER TON V CASH	F CASH	DEPR.	TOTAL	TOTAL M$/YR
RAW MATERIALS								
COAL RECVG	1.1700	3861	8.8000	10.29600	0.0	0.0	10.29600	33977
ASH/COAL LOS	0.0800	264	0.0001	0.00001	0.0	0.0	0.00001	0
OXYGEN	0.0480	158	0.0001	0.0	0.00000	0.0	0.00000	0
NITROGEN	-0.1400	-462	0.7000	-0.09800	0.0	0.0	-0.09800	-323
CHEM AGT,CWT	0.0010	350	0.0000	0.04000	0.01000	0.0	0.05000	165
H2SO4	0.0160	5336	0.0000	0.57600	0.0	0.0	0.57600	1901
SULFUR	-0.0150	-5012	0.0000	-0.18000	0.0	0.0	-0.18000	-594
NAPHTHA	0.0012	445	0.0000	0.05400	0.0	0.0	0.05400	178
BINDER,CWT	0.3400	1122	5.0000	1.70000	0.0	0.0	1.70000	5610
TOTAL RAW MATERIALS				12.38808	0.00993	0.0	12.39801	40913
MANAGEMENT				0.0	0.26182	0.0	0.26182	864
TECHNICAL				0.0	0.47394	0.0	0.47394	1564
OPERATING				0.0	1.30333	0.0	1.30333	4301
CLERICAL				0.0	0.04000	0.0	0.04000	132
MAINTENANCE				0.35394	1.41576	0.0	1.76970	5840
WATER,M GAL	0.7500	2475	0.0110	0.00540	0.00285	0.0	0.00825	27
POWER,AC KWH	54.0000	178200	0.0120	0.43200	0.21600	0.0	0.64800	2138
FUEL COAL	0.0900	297	0.0001	0.0	0.00001	0.0	0.00001	0
INS. & TAXES				0.0	0.88485	0.0	0.88485	2920
REFUSE,TONS	0.1500	495	5.0000	0.67500	0.07500	0.0	0.75000	2475
DEPRECIATION				0.0	0.0	3.64938	3.64938	12043
TOTAL BULK COST				13.85441	4.68348	3.64938	22.18726	73218
G & A				0.0	0.08018	0.00164	0.08182	270
TOTAL COST FOR SALE				13.85441	4.76366	3.65101	22.26907	73488

CAPITAL SUMMARY

AREA: U.S.
PROJECT NO.: 1302
LOCATION: PENN.,W. VA.
CAPACITY: 3300 M TON/YR
PYRITIC SULFUR FROM COAL,(SO4)

DEPARTMENT: ECONOMIC EVALUATION
EVALUATOR: NEKERVIS
DATE: 8/30/74

	UNIT RATIO	$/UNIT PER YR	UNIT CAPITAL $/TON/YR FIXED	V.WORK	F.WORK	TOTAL	M $ CAPITAL FIXED	TOTAL
EQUIPMENT		35.99998				35.99998	118800	118800
BUILDING		8.21212				8.21212	27100	27100
LAND		0.03030				0.03030	100	100
TOTAL DFC		44.24239				44.24239	146000	146000
M & S		0.0	0.0		0.07576	0.07576	0	250
R.M. INV.		0.0	0.0		0.10108	0.10108	0	334
IN-PROC. INV		0.0	0.0		0.04238	0.04238	0	140
TOTAL BULK MFG		44.24239	0.0		0.21922	44.46159	146000	146723
INV FOR SALE		0.0	0.0		0.15237	0.15237	0	503
G & A		0.02700	0.0		0.00027	0.02727	89	90
CASH & ACC.		0.0	1.96000		0.0	1.96000	0	6468
TOTAL CAPITAL FOR SALE		44.26938	1.96000		0.37186	46.60121	146089	153784

PROFIT CALCULATIONS

AREA: U.S.
PROJECT NO.: 1302
LOCATION: PENN.,W. VA.
CAPACITY: 3300 M TON/YR

DEPARTMENT: ECONOMIC EVALUATION
EVALUATOR: NEKERVIS
DATE: 8/30/74

PYRITIC SULFUR FROM COAL,(SO4)

	M TON/YR	PRICE 1 $/TON	PRICE 1 M$/YR	PRICE 2 $/TON	PRICE 2 M$/YR	PRICE 3 $/TON	PRICE 3 M$/YR
MAIN PRODUCT	3300	28.0000	92400	24.0000	79200	33.0000	108900
TOTAL SALES	3300	28.0000	92400	24.0000	79200	33.0000	108900
COST FOR SALE		22.2691	73488	22.2691	73488	22.2691	73488
PROFIT BEFORE TAXES		5.7309	18912	1.7309	5712	10.7309	35412
PROFIT AFTER TAXES		2.9801	9834	0.9001	2970	5.5801	18414
WORKING CAPITAL		2.3319	7695	2.0519	6771	2.6819	8850
TOTAL CAPITAL		46.6012	153784	46.3212	152860	46.9512	154939

PROFIT RATIOS AT CAPACITY

PERCENT ROTCBT	12.3	3.7	22.9
PERCENT ROTCAT	6.4	1.9	11.9
PERCENT ROTSBT	20.5	7.2	32.5
PERCENT ROTSAT	10.6	3.8	16.9
TURNOVER	0.601	0.518	0.703
SENSITIVITY			
PCT ROTCBT @ 50% CAPACITY	-2.9	-7.3	2.5
PCT ROTCAT @ 50% CAPACITY	-1.5	-3.8	1.3
PCT ROTCBT @120% DFC	8.1	0.9	17.0
PCT ROTCBT @ 80% DFC	18.5	8.0	31.5

BREAKEVEN DATA

	PRICES,$/TON PRODUCT	PRICES,$/TON BY-PROD	THOUSANDS OF $ @50% CAP.	THOUSANDS OF $ @100%CAP.
SALES INCOME @ PRICE 1	28.0000	0.0	46200	92400
2	24.0000	0.0	39600	79200
3	33.0000	0.0	54450	108900
TOTAL COST/YR.+ 10% ROI	26.9292	0.0	66007	88866
+ 20% ROI	31.5893	0.0	81385	104245
+ 30% ROI	36.2495	0.0	96763	119623
VARIABLE COST/YEAR - TOTAL			22860	45720
TOTAL COST/YEAR (EXCLUDING DEPRECIATION)			38580	61440
TOTAL COST/YEAR (INCLUDING DEPRECIATION)			50628	73488

UNIT COST & CAPITAL SUITABLE FOR CASH FLOW INPUT

VARIABLE COST	13.85441	FIXED ALLOC. CAPITAL	0.02700
DEPRECIATION	3.65101	VAR. WORKING/TON/YR	0.0
TOTAL CST(LESS EXP. CONST)	22.26906	VAR. WORKING - %REV	6.99999
		FIXED WORKING	0.37186

10.7.3 Chemical Leaching Added to an Existing Coal Preparation Plant[28]

One interesting alternative is the incorporation of chemical leaching in conjunction with inorganic sulfur and ash removal by conventional coal washing equipment. This write-up describes how such conventional coal preparation might be used and provides a hypothetical basis from which an optimized assembly of processes can be structured.

A number of coal companies produce a primary product of low ash and low sulfur values in their preparation plants. The premium product may be sold as metallurgical grade coal, or it may be blended with other grades for various uses. The heavier fraction is reprocessed, using a higher specific gravity for the separation and giving a lower quality product, but one that can be used in some areas or recombined with primary product for use as a steam coal.

A block flowsheet is given in Figure 53, showing in general terms primary and secondary washing where just the best 20% of the float coal and the worst 7% of refuse are separated, while the bulk of the coal, as middlings, is forwarded to the chemical leaching process for upgrading. The TPH figures are representative only. The proportions would vary in accordance with the particular coal, the equipment used, the desired product specifications, and the economics. The coal leaving the leach process has the initial pyritic sulfur content reduced by 90 to 95% as needed to meet product specifications. This is blended with the previously separated float coal for a greater overall yield than could be obtained by washing alone.

FIGURE 53

COAL PREPARATION AS AN ADJUNCT TO PYRITIC SULFUR REMOVAL BY LEACHING

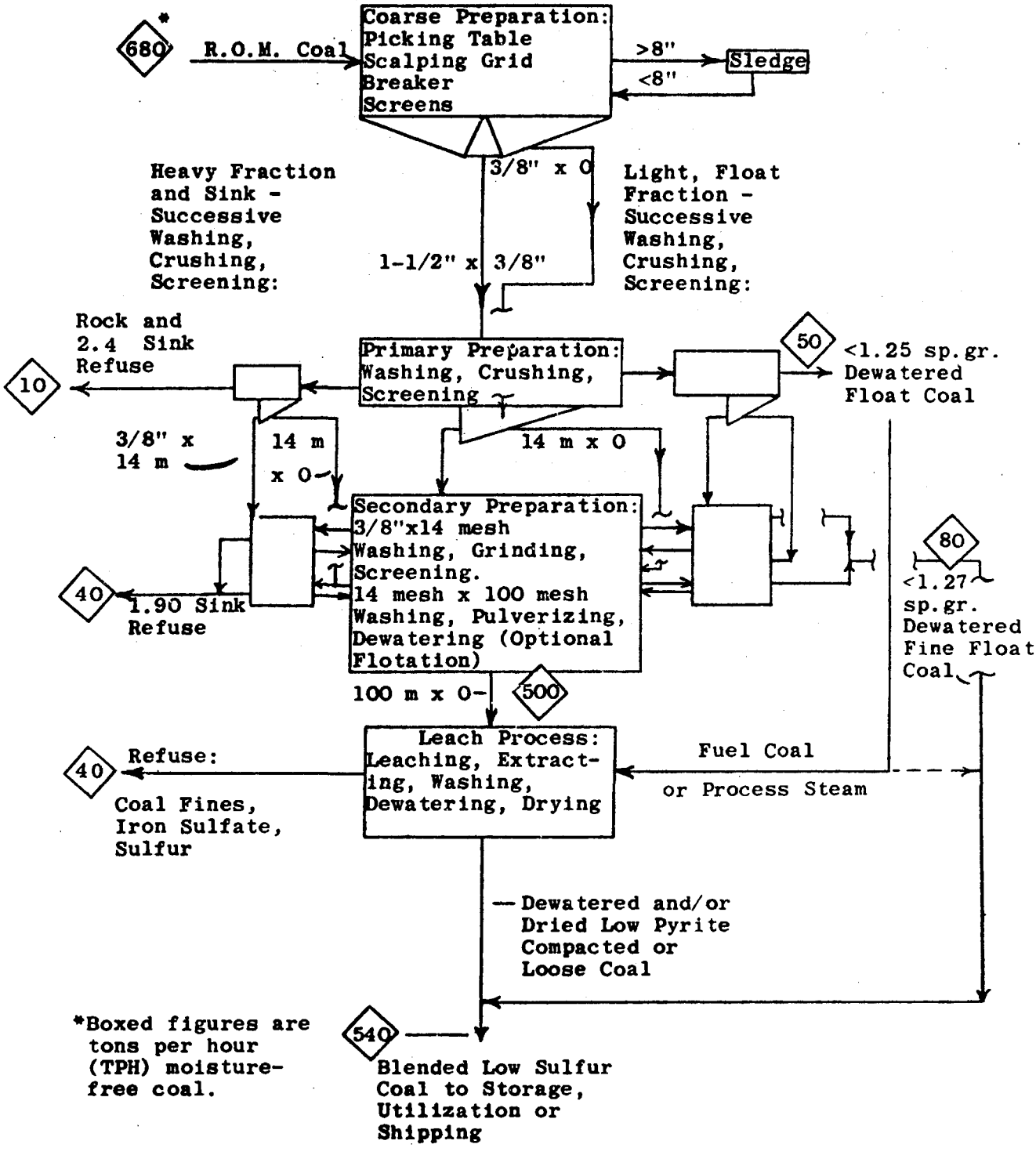

*Boxed figures are tons per hour (TPH) moisture-free coal.

The coarse preparation includes a picking table and scalper grizzlies on 8-inch centers to remove large pieces of rock or large pieces of coal which are broken with a sledge hammer and then added to the bulk of the coal being conveyed to coarse screens and a breaker. This would ordinarily be done at mine mouth.

The coarse screens make a three-way split: Undersize, below 3/8 in., is advanced to the secondary preparation. Oversize is crushed to 1 1/2 in. topsize, and this is combined with the 1 1/2 in. x 3/8 in. midscreen fraction and is conveyed to the primary preparation step.

In the primary preparation a light fraction, e.g. <1.25 specific gravity, is separated. Some product is withdrawn from this, and the remaining float material is ground and moved to the light end of the secondary preparation circuit. A very heavy sink fraction, e.g. >2.4 specific gravity, is removed and discarded and the somewhat lighter fraction of this high density material is ground and fed to the heavy end of the secondary preparation.

Data are given in Table 29 and Figure 54 for Lower Kittanning coal float-sink tests. The specific gravities and sizes discussed here are taken from these data. These parameters are adjusted to fit the data for the coal being handled.

The equipment in the primary preparation section is assembled from an assortment of jigs, cones and cyclones and is operated with water, a heavy liquid, or a suspension to produce the desired light skimming and discharge of stone for the relatively coarse material.

TABLE 29

FLOAT AND SINK ANALYSIS, DRY BASIS[2]

(LOWER KITTANNING COAL. DATA BELOW 1.30 SP. GR. ARE EXTRAPOLATED)

CUMULATIVE FLOAT RECOVERY

Specific Gravity		1 1/2" x 100 m				3/8" x 100 m				14 m x 0			
Sink	Float	Wt. %	% Ash	% Pyr. S	% Total S	Wt. %	% Ash	% Pyr. S	% Total S	Wt. %	% Ash	% Pyr. S	% Total S
--	1.22	17[1]	4.2	0.76	1.56	8	3.5	0.69	1.30	0	3.0	0.35	1.05
1.22	1.25	30	4.5	0.80	1.60	20[2]	3.8	0.70	1.31	10	3.0	0.36	1.08
1.25	1.27	40	4.8	0.85	1.65	30	4.0	0.74	1.35	20[3]	3.2	0.40	1.12
1.27	1.30	59.5	5.14	0.91	1.78	57.4	4.60	0.89	1.46	42.3	3.62	0.50	1.26
1.30	1.40	86.8	6.98	1.63	2.42	85.0	8.38	1.55	2.14	77.2	5.52	0.92	1.66
1.40	1.60	92.7	8.45	1.77	2.55	91.9	9.35	1.69	2.27	89.5	7.44	1.21	1.90
1.60	1.90	94.4	8.96	1.87	2.63	94.2	9.72	1.76	2.34	93.6	8.78	1.32	2.00
1.90	--	100.0	12.14	2.72	3.46	100.0	12.50	2.71	3.27	100.0[4]	12.33	2.62	3.28

FRACTION ANALYSIS

Specific Gravity		Approximate				
Sink	Float	Size Consist	Wt. %	% Ash	% Pyr. S	% Total S
--	1.22	1 1/2"x100m	7	4.5	0.76	1.56
1.22	1.25	3/8" x 14m	13	3.8	0.70	1.31
1.25	1.27	14m x 100m	6	3.2	0.64	1.30
1.27	1.30	14m x 0	16.3	3.6	0.50	1.26
1.30	1.40	" " "	34.9	7.82	1.44	2.15
1.40	1.60	" " "	12.3	19.48	2.97	3.42
1.60	1.90	" " "	4.1	38.19	3.91	4.20
1.90	--	" " "	6.4	64.13	21.64	21.91

Rough estimate of coal preparation, based on 680 TPH:

[1] Separate 7% (50 TPH) for fuel coal. Forward remainder to light end of (2).

[2] Assume 13% after the above 7% is gone. Separate 6% (40 TPH). Forward 7% to light end of next grind.

[3] Assume about 7% left <1.27 after 90 TPH are removed. Separate 6% (40 TPH).

[4] Assume 7% is discarded. This could be reprocessed by the Bureau of Mines two-stage froth flotation method and the coal fraction forwarded to the leach step.

Figure 54

Float and Sink Analysis Plot, Dry Basis
(Data for <1.30 sp.gr. are extrapolated)
Lower Kittanning Coal
Fox Mine, Clarion County, Pennsylvania
EPA Report 650/2-74-025[2]

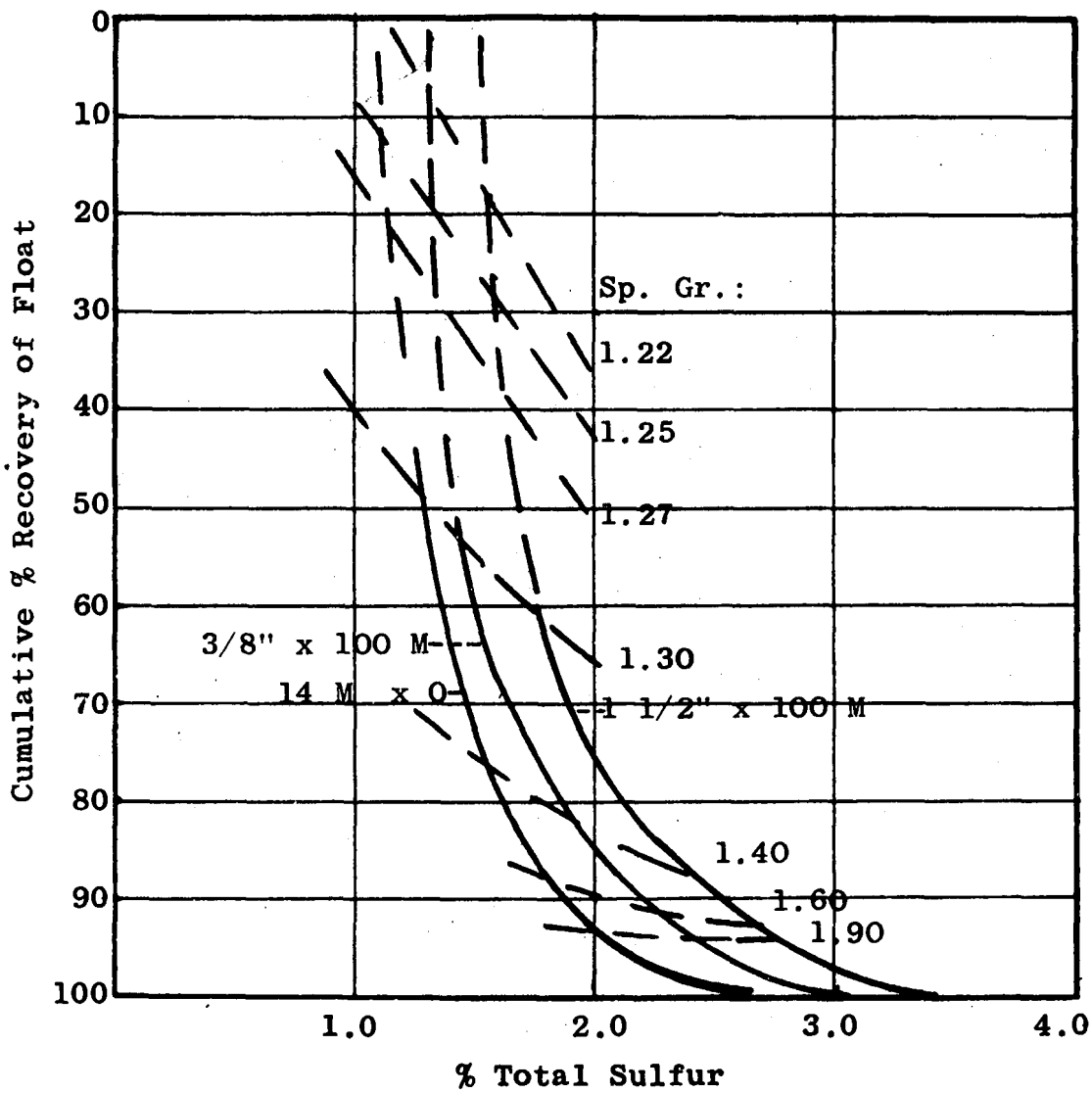

The secondary preparation also uses cones, cyclones, and heavy media on the smaller sized material. Additionally, concentrating tables are used to good advantage on the plus 28 mesh fine coal and froth flotation on the under 28 mesh fines. A complete study is needed to determine proper equipment to be installed for coals in a given region. A typical arrangement of circuits involves crushing, screening and skimming. Part of the undersize from each crushing is advanced to the next circuit and part of the lightest and heaviest material is removed for blending (in the case of float coal) or discard (heavy), while the remainder of the light ends and heavy ends receives additional processing. The bulk of the crushed material at each step moves to the next size reduction. Some of the relatively dry, coarse float coal with just above 1.25 specific gravity is pulverized in this section and added to the dewatered coal to increase the average dryness.

The washed, pulverized middlings from the secondary preparation could be fed to the mixing tank for processing through the leach system. Meeting fuel coal needs from the float coal would increase the usable product from the process. The leach process product could be blended in with the remaining float coal to increase the overall plant output. Where a utility is located adjacent to the preparation plant, waste heat or steam and cooling tower service could be obtained from the power generating facility.

The leach plant could also share with the preparation plant or utility and possibly not be debited for the following: site preparation; general administrative, shops, warehouse, service and yard facilities; coal handling facilities and

personnel. The leached, dewatered product could be blended with the ground dewatered, float coal, and the installation could be adapted such that no further drying nor compaction was required. Existing storage silos and conveyors could be used.

10.7.4 Calculations For Alternative Cases in Chapter 6

The base capital cost was taken from the stated sheet in Section 10.6.2 or other table or section listed. The cost or equivalent value of the base facilities is given and the method or reasoning used to determine the revised cost or allocation is given. This is used to estimate the approximate reduction that was chosen for the example. Cost units are $M and $M/yr.

Case 2 CH

Capital Reduction, $M

Process Capital,

Receiving(a) and Preparation(b) 3,000

Sheet 1, 8800 x $2^{0.7}/2$ = 7172 -- the approximate value of the Base Case size facilities in a plant twice this size. Allocate 70% to the desulfurization process, 7172 x 0.7 = 5020, 8800-5020 = 3780

Drying(b) 2,600

Sheets 13 & 15, first 2 dryers & decanters = 1412
Eliminate 4 of the next 6, 3812 x 4/6 = 2554.
Some drying facilities already exist. Plus other economies because product is not shipped.

Compaction(a,d) 1,200

Eliminate compactor, use smaller tank and pumps. Sheet 14, (476-135) x 6985/1888 = 1262

Product Coal Handling(b) 1,700

Sheet 16, 3770. Keep about 50% of the equipment 3770 x $(0.5)^{0.9}$ = 3770 x 0.535 = 2017, 3770-2017 = 1753

Other Capital,

Site, Building, General(c) 2,800

Table 20, 3882. Allocate 25% of existing site and building to desulfurization 3882 (1-0.25) = 2912

Utilities (b)	
Less steam, lower unit capital	1,700
Table 20, 2730. Steam use is about half and is supplied from the large utility boilers. 2730 x (1.0-(0.5x0.7)) = 1774	
Allowances, 4% of reductions	500
Total Fixed Capital Reduction	13,500

Ratio to Base Case Coal Handling 0.47

Table 20, 28,702. 13,500/28,702 = 0.47

Working Capital, $M	
Cash and Accounts Receivable (a,d)	6,000
Section 5.1.1.2, 6470. There are no accounts receivable for the treated coal so reduce by 95% or about 6147.	
Coal Inventories (d)	600
Section 5.1.1.2 & Table 17B. Product inventory = 500, coal portion of raw material (RM) inventory = ca 1500. Product inventory is not for sale so value is lessened by 500(25-8.80)/25 = 324. RM inventory is shared with utility, subtract another 276 for 600.	
Other Materials and Supplies (b)	100
Section 5.1.1.2, 250. Assume this is shared with the large utility at a 40% capital savings.	
Total Working Capital Reduction	6,700

Operating Costs Reduction, $M/yr

Capital Related,

Labor (a,b,c): 1,200

	Base Case	Case 1 CH	Decrease in No. of Men x $/yr	
Administration	12	4	8 x 20 =	160
Production				
Managers	3	Use exist-	3 x 30 =	90
Foremen, leaders	4	ing sup'vn	4 x 22 =	88
Labor, Spares	2	0		
Labor, Rec'g & ship	18	0	36 x 18 =	648
Labor, Dry & Compact	32	16		
Services				
Eng'g, PD, QC	5	2	3 x 24 =	72
Util. & O_2	3	2	1 x 22 =	22
Other	6	1	5 x 18 =	90
TOTAL Men	85	25	60	
Labor, $M	1655	485		1170
G&A, $M	54	24		30
TOTAL, $M	1709	509		1200

Other Capital Related 1,620

Table 20, Capital Related Costs less labor and G&A, 5153-1709 = 3444. Reduce by fraction of capital reduction: (3444) x (0.47) = 1619

Unit Ratio Based,

Binder(d) 4,170

Table 20, 5610/3300 = $1.70/T. Section 4.4.2.4 & Case 4. Stabilization could cost from 5¢ to 50¢/short ton. Use 43.5¢.
3300 (1.70-0.435) = 4175

Other Unit Ratioed; Services and fuel coal equivalent(c) 320

Table 20, 1067. Charge 70% for services and utilities, 1067 (1.0-0.7) = 320

Total Operating Costs Reduction 7,310

Effect on Coal Handling Region -$2.22/T

7310 ÷ 3300 = 2.215

Alternative Unit Cost

Base Case Coal Handling	3.59
Less Reductions	-2.22
Case 2 CH, Coal Handling	$ 1.37/T

Case 2 CP

The capital and operating cost reductions for the Chemical Processing steps are somewhat speculative but illustrate the impact of reductions of a given magnitude. The case description is given in Section 6.2.2. The base case values are totalled from the Chemical Processing regions of Table 20 and the fraction to be eliminated is described in Section 6.2.2.

Capital Reduction, $M	
Process Capital,	
Leaching	15,000
31,911 x 0.5 = 15,956	
Extraction, Sector 1400	2,500
4,932 x 0.5 = 2,466	
Waste Sulfates	6,500
13,891 x 0.5 = 6,946	
Subtotal, Process	24,000
Other Capital,	
Site, Buildings, General	3,400
11,486 x 0.30 = 3,446	
Utilities	
Waste Sulfates	4,490
8,981 x 0.5 = 4,490	
Remainder x 0.3	2,520
8,410 x 0.3 = 2,522	

Allowances	
Above Process and Other Capital Reductions x 0.08	2,750
34,410 x 0.08 = 2,753	
Subtotal, Other	13,160
Total Fixed Capital Reductions	37,160
Ratio to Base Case Chemical Processing	0.32
Table 20, 117,298. 37,160/117,298 = 0.317	
Operating Costs Reduction, $M/yr	
Capital Related,	
Labor and G&A	1,360
5446 x 0.25 = 1,362	
Other Capital Related	5,550
17,359 x 0.32 = 5,555	
Unit Ratio Based,	1,550
Utilities, Waste Disposal, Coal Equivalent to Fuel & Ash Loss, Less Reduced Sulfur Credit	
6,212 x 0.3 - (594/2) = 1,567	
TOTAL, Operating Cost Reduction	8,460
Effect on Chemical Processing Regions	-$2.56/T
8460 ÷ 3300 = 2.564	
Alternative Unit Cost	
Base Case Chemical Processing	$9.88/T
Less Reductions	-2.56
Case 2 CP, Chemical Processing	$7.32/T

(This is further reduced in Section 6.2.2 due to increased product tonnage when fuel coal requirements are met otherwise).

Case 3 CP

Discussion -- This case illustrates a method of assessing the value of being able to apply chemical desulfurization to middlings coal from a gravity separation process. With chemical desulfurization, a hypothetical 680 TPH preparation plant could be operated as in Figure 53, Section 10.7.3 to obtain high quality float coal with sequential grinding and separating yielding 500 TPH of middlings to the chemical process. Without chemical desulfurization, the tendency would be to grind the coal more fine to maximize the float coal and minimize the refuse and poor middlings quality that would have to be discarded because they could not meet present fuel source performance standards for air quality in the vicinity of the coal combustion plant.

The disposition of the coal is given below for 680 TPH, 7920 hr/yr operation for two such cases:

Sp. Gr. Control	<1.27 Float		<1.35 Float	
Coal size consist	1-1/2" x 28 mesh		Thru 14 mesh	
Pyritic/Total S, %	0.7/1.4		0.7/1.4	
	%	M TPY	%	M TPY
R.O.M. Coal	100	5386	100	5386
Float Coal	19	1030	63	3374
Middlings	74	3960	30	1616
Refuse, >1.9 sp. gr.	7	396	7	396

An estimate of costs for coal receiving and complete preparation is summarized here. Further details follow the discussion.

Preparation Plant Capital, $M	
Receiving, Handling, Pulverizing	11,000
Primary and Secondary Washing	5,000
Other--Site, Bldgs., Util., etc.	4,000
	20,000
Operating Costs, $M/yr	
Preparation Plant	
Labor and G&A	600
Other capital related	3,600
Utilities etc.	1,000
Subtotal, Preparation	5,200
Disposal ($0.40/T)	
High ash refuse	160
Middlings, <1.35 sp. gr. case	640
Subtotal, Disposal	800
TOTAL Operating Costs	6,000
Unit operating cost assigned to 3374M TPY of float coal, $/T	1.78

A meaningful estimate of the value of reprocessing the middlings in a chemical desulfurization plant would require a much more exhaustive study of plant data and economics for a well defined preparation plant, various alternative methods of operating a complete facility, waste disposal methods and accounting practices for a particular organization. The following assumptions and calculations indicate the impact of one interpretation of the value to the Chemical Processing plant.

a. Existing Plant, Costs

1) Preparation plant and high ash residue disposal costs spread to the float coal:

$$(5200 + 160) \div 3374 = \$1.60/T$$

b. Chemical Processing, Credits

1) Credit from existing plant for avoiding cost of middlings disposal: 640

2) Middlings are available to Chemical Processing at nil cost thus saving the raw material cost of $8.80/T

8.80 x 1616 = $14,220 M/yr 14,220

TOTAL Operating Cost Reduction 14,860

Effect on Chemical Processing Regions -$4.50/T

14860 ÷ 3300 = 4.50

Refuse disposal might cost less. The comparable coal value is indeterminate -- alternative R.O.M. coal grades would have a lower value but receiving and grinding costs would need to be added. Tax and accounting practices would need to be considered. Use a conservative credit of $2.00/T.

Case 2 CP, Chemical Processing	$6.85/T
Less the above credits	-2.00
Case 3 CP, Chemical Processing	$4.85/T

Calculations -- The costs related to the existing coal handling facilities were approximated. Units are generally $M for capital, $M/yr for costs and $/T for unit costs.

Example costs expended to separate float coal:

a. Scale-up Factor

Base Case, 121.65 TPH/train x 4 x 24 x 330 = 3854M TPY

This Case, 680 TPH x 7920 hrs/yr = 5385M TPY

680 TPH is 5385/3854 = 1.4 x Base Case

b. Capital (excluding drying, compacting & shipping)

Process	11,000
Table 13, Sector 000, 8800.	
$8800 \times (1.4)^{0.7} = 11,100$	
Other	4,000
Table 20, Coal Handling Total less Process	
28,702 - 19,555 = 9,147	
Proportion for Sector 000	
9147 x 8800/19555 = 4116	
Preparation	5,000
Section 10.7.3. The initial reference[28] gave an approximation of <5000.	
TOTAL	20,000

c. Operating Costs

Labor and G&A	600
Case 2 CH, 1,200. Proportioned for Sector 000	
1200 x 8800/19555 = 540	
Other Capital Related	3,600
Table 13, Coal Handling, 0.18	
20,000 x 0.18 = 3,600	
Utilities	1,000
Table 13, utilities, 727. Increase for preparation plant power, coal stabilization; to 1000.	
Subtotal Preparation	5,200
Disposal	800
Table 17B, Steam plant ash disposal $1.50/T. Disposal of inert residue could cost up to $1.50/T; however, $0.40/T was used.	
Refuse 396 x 0.40 = 158	
Middlings 1616 x 0.40 = 646	
804	
TOTAL Operating Costs	6,000

Case 3 U

The case described in 3 CP is approached from the standpoint of the coal cost for the entire complex. The increasing costs accompanying improved coal quality are shown.

a. Purchased coal, 3.3% total S
   5386M TPY x $8.80/T = $47,397 M/yr

b. Add part of the preparation plant-receiving, handling, refuse separation, grinding, half of site, building and utility capital.

Fixed CH Capital, $M	
Receiving, handling, grinding	9,000
Other -- site, bldgs., util., etc.	2,000
	11,000
Handling Cost, $M/yr	
Coal lost as refuse	
390 M TPY x $8.80/T	3,485
Refuse disposal	160
Other operating (proportioned from 3 CP)	
5200 x 11/20	2,860
TOTAL Handling Costs	6,505
Unit Handling Cost, $/T	1.30
4990M TPY, 2.0% total S	

c. Extend primary washing with wet grinding. Add secondary washing & pulverizing, site, buildings, utilities (final drying not included).

Fixed CH Capital added, $M	
Conveying, centrifuging, pulverizing	2,000
Primary and secondary washing	5,000
Other -- site, bldgs., util., etc.	2,000
	9,000

Washing Costs added, $M/yr	
5200 x 9/20	2,340
Summary of (b) and (c)	
Fixed CH Capital, $M	20,000
Preparation Costs $M/yr	
Coal lost, disposal	3,645
Receiving and handling	2,860
Washing and pulverizing	2,340
TOTAL Operating Cost	8,845
Unit Preparation Cost, $/T	2.62
3374M TPY, 1.4% total S	

The increase from (b) cost to (c) cost might be gradual as sulfur content is incrementally lowered. For a time it may be possible to sell the 1.4 to 2% S middlings to another processor. Eventually, it is assumed here, the entire 4990M TPY would be upgraded for use on-site.

d. Install Chemical Processing, adapt preparation plant to produce 1030M TPY float coal with <1.3% S and feed the remaining 3960M TPY to chemical processing to produce 3480M TPY of <1.1% S coal (From Case 2 CP and Table 18).

3960 x (3390/3861) = 3477).

Fixed Capital added, $M	
CH, Table 13, sectors 900 & 1000 less reductions in 2 CH:	
10,755 - 5,500	5,255
CP, Case 2 CP: 117,298 - 37,160	80,138
Chemical Processing Costs, $M/yr	
Case 2CP + extra URC costs from Table 21, use about $3/T:	
32,618 - 8,460 + 3(3480-3390)	24,248
Drying, transferring, misc. - assume already largely accounted for.	nil

Summary of (a), (b), (c) and (d)

Fixed Capital, $MM	
CH, drying, and transferring	25.3
CP	80.1
TOTAL Fixed Capital	105.4
Operating Costs, $MM/yr	
Purchased coal	47.4
CH less value of coal lost (already included in purchased cost)	5.4
CP	24.2
	77.0
Unit Operating Cost, $/T	17.07
1030M TPY, <1.3% S	
3480M TPY, <1.1% S	
4510M TPY, <1.2% S	
Apparent Treating Cost, $/T	8.27

Case 4 CP -- Merchant Coal

No reduction in utilities, 25% reduction in all else. See Case 4 CP, Section 6.2.2.

Capital Reduction, $M	
Process Capital	
See 2 CP, this section 24,000 x 0.25/0.5	12,000
Other Capital	
Site, Bldgs., General. See 2 CP. 3,400 x 0.25/0.5	2,830
Utilities	nil
Allowances	1,170
14,830 x 0.08	
TOTAL Fixed Capital Reductions	16,000

Ratio to Base Case Chemical Processing 0.14

16,000/117,298 = 0.136

Operating Costs Reduction, $M/yr

Capital Related, See 2 CP.	
Labor and G&A	1,360
Other Capital Related, new ratio 5550 x 0.14/0.32	4,330
Unit Ratio Based (6212 x 0.25) - (594 x 0.25) = 1,404	1,400
TOTAL Operating Cost Reduction	7,090

Effect on Chemical Processing Region -$2.15/T

7090 ÷ 3300 = 2.15

Did not use the increase in product tonnage described for 2 CP in Section 6.2.2. However the type of credits shown in 3 CP would also be applicable here.

Alternative Unit Cost

Base Case Chemical Processing	$9.88/T
Less reductions calculated above	-2.15
Less Case 3 CP credits	-2.00
Case 4 CP, Chemical Processing	$5.73/T

10.8 CONTINUOUS SIMULATION MODELING PROGRAM (CSMP)

10.8.1 CSMP Listing

This program was developed for the purpose of looking at the process chemistry using a transient state material balance as a basis for chemical calculations. The reaction kinetics configurations are those presented in Section 4.2.

The CSMP program was run on an IBM 370/155 computer. CSMP is a program package that was developed by IBM for the simulation of continuous systems.

The minimum machine configuration for CSMP is a System/360 Model 40G CPU(2040) with Floating Point Arithmetic (#4427). The minimum partition or region size is 102K when using FORTRAN IV (G) Compiler and Linkage Editor Level F (88K). One IBM 2311 Disk Storage Drive or equivalent (in addition to the operating system residence DSPD) is required to install CSMP, but this need not be dedicated disk storage. While not necessary for execution, one 2400 series tape drive is required for system installation.

The partition or region size required for execution of CSMP, is determined by the largest of the four phases: translator, FORTRAN IV compiler, linkage editor and execution.

```
$$$CONTINUOUS SYSTEM MODELING PROGRAM  III   V1M1   TRANSLATOR OUTPUT$$$

*
*   CSMP  COAL DESULFURIZATION TRANSIENT STATE MASS BALANCE
*
*
*   INTEGER VARIABLE SPECIFICATION
*
      FIXED I,J,K,IFLAG,INIT1,INIT2,KFLAG,LFLAG,NMAX
      FIXED IF1,MF1
*
*   MACRO PRECLUDES THE OCCURENCE OF NEGATIVE MOLAR QUANTITIES
*   IN MIXER AND REACTORS(NEGATIVE RESULTS MAY ARISE IF THE INTEGRATION
*   STEP SIZE IS LARGE AND THE DERIVATIVE IS LARGE).
*
MACRO Y =LIMINT(IC,YDOT,P1)
PROCEDURE DYDT=LIM(Y,YDOT,P1)
      DYDT=YDOT
      IF(Y.LE.P1)DYDT=AMAX1(0.0,YDOT)
ENDPROCEDURE
      Y=INTGRL(IC,DYDT)
ENDMAC
*
*   SPECIFICATION OF CONSTANTS AND INITIAL CONDITIONS
*
*
INITIAL
CONSTANT D7=.5
CONSTANT INIT1=1,KFLAG=1,LFLAG=1,NMAX=10
CONSTANT RESTIM=2.0,REST=10.0,FILTIM=1.0
CONSTANT P1=0.0
    CONSTANT F2TM=.25,F32TM=3.25,F14TM=3.50,LID=0.0,LL=0.0
CONSTANT LFLO=0.0
CONSTANT LW=0.0
CONSTANT O2FAC=1.0,VFAC=1.0,PRESMX=14.7
CONSTANT PRESS=80.
CONSTANT T5=101.,T7=128.
CONSTANT RHOS=90.1
CONSTANT RHOL=9.98
CONSTANT F79=30.9,DIA=13.5,ZMAX=96.,PRES2=14.7
CONSTANT F12=135.87,F18=1354.05
CONSTANT F44=653.,F45=87.32,F46=348.58,F47=86.72,F48=24322.
CONSTANT F558=404.9541
CONSTANT F11=17461.
CONSTANT F41=.0001,F42=.00001,F43=.00001
CONSTANT IC5=58.34,IC6=231.57,IC7=57.61,IC8=17057.
CONSTANT IC1=11600.15,IC2=90.27,IC3=.0001,IC4=433.82
CONSTANT MW1=13.,MW2=119.96,MW3=32.06,MW4=96.06
CONSTANT MW5=55.847,MW6=55.847,MW7=1.,MW8=18.,MW9=32.
CONSTANT SL2=1.,SL3=-.8,SL4=-1.2,SL5=-10.2
CONSTANT SL6=9.2,SL7=-9.6,SL8=4.8
CONSTANT SR5=1.,SR6=-1.,SR7=1.,SR8=-.5,SR9=.25
      VP70=EXP(13.6953-3215.4/(T5+273.2)-333070./(T5+273.2)**2)
      KR=.438E08*EXP(-6646.5/(T5+273.2))
      KR1=.438E08*EXP(-6646.5/(T7+273.2))
      VP72=EXP(13.6953-3215.4/(T7+273.2)-333070./(T7+273.2)**2)
      KL=2.E05*EXP(-3524.67/(T5+273.2))
      KL1=2.E05*EXP(-3524.67/(T7+273.2))
*
*   LIMIT INSURES AGAINST NEGATIVE MOLAR AMOUNTS.
```

```
*    IN THE MIXER AND REACTORS FOR A SPECIAL CASE
*    NOT HANDLED BY THE MACRO
*
DYNAMIC
NOSORT
     FEPYR=LIMIT(0.0,FEPYR,FEPYR)
     H2OMX=LIMIT(C.C,H2OMX,H2OMX)
     FE2MX=LIMIT(C.0,FE2MX,FE2MX)
     COAL=LIMIT(0.0,COAL,COAL)
     FE3MX=LIMIT(C.C,FE3MX,FE3MX)
     ACMX=LIMIT(0.0,ACMX,ACMX)
     SO4MX=LIMIT(C.C,SO4MX,SO4MX)
     SULFMX=LIMIT(0.0,SULFMX,SULFMX)
     IF(TIME.GT.20)F12=140.
     IF(TIME.GT.30)F12=145.
SORT
       H=3.5*(4.*VOL/7.48/3.14/3.5)**.333
     WSMX=COAL*MW1+FEPYR*MW2+SULFMX*MW3
     WLMX=SO4MX*MW4+FE2MX*MW5+FE3MX*MW6+ACMX*MW7+H2OMX*MW8
     VOLM=WLMX/9.98
     WLT=F44*MW4+F45*MW5+F46*MW6+F47*MW7+F48*MW8+F18*MW8
     WST=F41*MW1+F42*MW2+F43*MW3+F11*MW1+F12*MW2
PROCEDURE VOL,TOTFLO=PES(WLMX,WSMX,WLT,WST)
     IF(LFLO.EQ.1.0)GO TO 358
     LFLO=1.0
     VOL=WSMX/12.C32+WLMX/9.98
     TOTFLO=WLT/9.98+WST/12.032
358 CONTINUE
ENDPROCEDURE
     FWATR=F18+F48
     WFLS=1.-FWATR*MW8/WLT
       VP7=VP70*(.99973-.0863*WFLS-.16C59*WFLS**2)
       FL=WLT/RHOL
     TAU=(FL+WST/RHOS*7.48)/VOL
     RHOAVG=(WLMX+WSMX)/VOL
       DPL=H*RHOAVG*7.48/144.
       PTAVG=PRESMX+DPL/2
       P8=(PTAVG-VP7)*.9*02FAC
PROCEDURE Y=INT(FE3MX,FE2MX)
        IF(FE3MX.LT..CC0001)CALL DEBUG(2,0.0)
       IF(FE2MX.LT..00000001)CALL DEBUG(2,0.0)
       Y=FE3MX/(FE2MX+FE3MX)
ENDPROCEDURE
     DM2=-KL*MW2*Y**2*FEPYR**2/(COAL*MW1)
     DM5=C.C
     DCOAL=F11-F51
     DFESDT=F12-F52+DM2*SL2
     DSDT=F43-F53+DM2*SL3
     DSO4DT=F44-F54+DM2*SL4
     DFE2DT=F45-F55+DM2*SL5+DM5*SR5
     DFE3DT=F46-F56*SL6*DM2+DM5*SR6
     DH2OMX=F18+F48-F58+DM2*SL8+DM5*SR8
     DHDT=F47-F57+DM2*SL7+DM5*SR7
     COAL=LIMINT(IC1,DCOAL,P1)
     FEPYR=LIMINT(IC2,DFESDT,P1)
     SULFMX=INTGRL(IC3,DSDT)
     SO4MX=INTGRL(IC4,DSO4DT)
     FE2MX=LIMINT(IC5,DFE2DT,P1)
     FE3MX=LIMINT(IC6,DFE3DT,P1)
```

```
      ACMX=LIMINT(IC7,DHDT,P1)
      H2OMX=INTGRL(IC8,DH2OMX)
PROCEDURE IC51,IC52,IC53=LJK(F11,F12,LW)
      IF(LW.EQ.1.0)GO TO 69
      LW=1.0
      IC51=F11
      IC52=F12
      IC53=.0001
 69 CONTINUE
ENDPROCEDURE
PROCEDURE IC54,IC55,IC56,IC57,IC58=HT(F44,F45,F46,F47,F48,LID)
      IF(LID.EQ.1.0)GO TO 25
      LID=1.0
      IC54=F44
      IC55=F45
      IC56=F46
      IC57=F47
      IC58=F48
 25 CONTINUE
ENDPROCEDURE
      A51=COAL*TOTFLO/VOL
      A52=FEPYR*TOTFLO/VOL
      A53=SULFMX*TOTFLO/VOL
      A54=SO4MX*TOTFLO/VOL
      A55=FE2MX*TOTFLO/VOL
      A56=FE3MX*TOTFLO/VOL
      A57=ACMX*TOTFLO/VOL
      A58=H2OMX*TOTFLO/VOL
PROCEDURE F51,F52,F53=THAT(RESTIM,A51,A52,A53,IC51,IC52,IC53)
      F51=A51
      F52=A52
      F53=A53
      IF(TIME.GT.RESTIM)GO TO 182
      IF(F51.EQ.0.0)F51=IC51
      IF(F52.EQ.0.0)F52=IC52
      IF(F53.EQ.0.0)F53=IC53
182 CONTINUE
ENDPROCEDURE
PROCEDURE F54,F55,F56,F57,F58=THAX(RESTIM,IC54,IC55,...
IC56,IC57,IC58,A54,A55,A56,A57,A58)
      F54=A54
      F55=A55
      F56=A56
      F57=A57
      F58=A58
        IF(TIME.GT.RESTIM)GO TO 181
      IF(F54.EQ.0.0)F54=IC54
      IF(F55.EQ.0.0)F55=IC55
      IF(F56.EQ.0.0)F56=IC56
      IF(F57.EQ.0.0)F57=IC57
      IF(F58.EQ.0.0)F58=IC58
181  CONTINUE
ENDPROCEDURE
*
*    1100 F-1 FILTER
*
      F161=.31379*F51
      F162=.31379*F52
      F163=.31379*F53
```

```
      F164=.31379*F54
      F165=.31379*F55
      F166=.31379*F56
      F167=.31379*F57
      F168=.31379*F58
*
      F51A=.68621*F51
      F52A=.68621*F52
      F53A=.68621*F53
      F54A=.68621*F54
      F55A=.68621*F55
      F56A=.68621*F56
      F57A=.68621*F57
      F58A=.68621*F58
      F181=F161
      F182=F162
      F183=F163
      F184=.08522*F164
      F185=.08522*F165
      F186=.08522*F166
      F187=.08522*F167
      F188=.08522*F168
*
      F194=.91478*F164
      F195=.91478*F165
      F196=.91478*F166
      F197=.91478*F167
      F198=.91478*F168
*
*     1100 V-1 EVAPORATOR-1200 F-1 FILTER
*
      F214=.9985*F194
      F215=F195
      F216=F196
      F217=.9925*F197
      F218=.5866*F198
      F268=.4134*F198
      F264=.0015*F194
      F267=.0075*F197
*
      F224=.787*F214
      F225=.9861*F215
      F226=.964*F216
      F227=.01835*F217
      F228=.2758*F218
*
      F244A=.213*F214
      F245A=.01385*F215
      F246A=.036*F216
      F247A=.9816*F217
      F248A=.7242*F218
PROCEDURE F244,F245,F246,F247,F248=REACT(FILTIM,IC54,IC55,IC56,...
IC57,IC58,F244A,F245A,F246A,F247A,F248A)
      F244=DELAY(15,FILTIM,F244A)
      F245=DELAY(15,FILTIM,F245A)
      F246=DELAY(15,FILTIM,F246A)
      F247=DELAY(15,FILTIM,F247A)
      F248=DELAY(15,FILTIM,F248A)
      IF(TIME.GT.FILTIM)GO TO 321
```

```
      IF(F244.EQ.0.0)F244=.06105*IC54
      IF(F245.EQ.0.0)F245=.00398*IC55
      IF(F246.EQ.C.0)F246=.01033*IC56
      IF(F247.EQ.0.0)F247=.27965*IC57
      IF(F248.FQ.0.0)F248=.12194*IC58
321   CONTINUE
ENDPROCEDURE
*
      F71=(F51A+F181)/NMAX
      F72=(F52A+F182)/NMAX
      F73=(F53A+F183)/NMAX
      F74=(F54A+F184+F244)/NMAX
      F75=(F55A+F185+F245)/NMAX
      F76=(F56A+F186+F246)/NMAX
      F77=(F57A+F187+F247)/NMAX
      F78=(F58A+F188+F248)/NMAX
PROCEDURE JC54,JC55,JC56,JC57,JC58=TH(F74,F75,F76,F77,F78,LL)
      IF(LL.EQ.1.0)GO TO 35
      LL=1.0
      JC54=F74
      JC55=F75
      JC56=F76
      JC57=F77
      JC58=F78
 35   CONTINUE
ENDPROCEDURE
      JC59=.000001
      JC51=.01
      JC52=.01
      JC53=.01
      F79=2.274*F12
*
*     200 R REACTOR (1 OF 10)
*
NOSORT
      F91=F71
      F92=F72
      F93=F73
      F94=F74
      F95=F75
      F96=F76
      F97=F77
      F98=F78
      F99=F79
10    F91A=F91
      F92A=F92
      F93A=F93
      F94A=F94
      F95A=F95
      F96A=F96
      F97A=F97
      F98A=F98
      F99A=F99
      RES1=0.0
      RES2=0.0
15    Y1=F96/(F95+F96)
      IF(F96.LT..CC01)CALL DEBUG(2,0.0)
      IF(F95.LT..CC01)CALL DEBUG(2,C.0)
      IF(F92.LT..001)CALL DEBUG(2,0.0)
```

```
      AREA=.785*DIA**2
    C22=KR1*AREA
    C11=KL1*MW2/(F71*MW1)*AREA
    WST1=MW1*F91+MW2*F92+MW3*F93
    WLT1=MW4*F94+MW5*(F95+F96)+MW7*F97+MW8*F98
    WFLS1=1-MW6*F98/WLT1
      RHOL1=62.43*(1.0+.72434*WFLS1+.943*WFLS1**2+.1087*WFLS1**3)
    VP71=VP72*(.99973-.0863*WFLS1-.16059*WFLS1**3)
      FL1=WLT1/RHOL1
      FT1=FL1+WST1/RHOS
    RHOAVE=(WLT1+WST1)/FT1
    DPL1=(ZMAX-Z)*RHOAVE/144*VFAC
    P81=(PRESS+DPL1-VP71)
    DER1=-C11*Y1*Y1/FT1*F92**2
    IF(Y1.LT.0.0)DER1=0.0
    IF(F92.LT.0.0)DER1=0.0
    DER2=-C22*P81/FT1/FL1*F95**2
    IF(F99.LT.0.0)DER2=0.0
    IF(F97.LT.0.0)DER2=0.0
    IF(F95.LT.0.0)DER2=0.0
 20 GO TO 30
21  IF(IF1.EQ.1)GO TO 20
CALL DEBUG(2,0.0)
    F92=F92A+SL2*RES1+SR2*RES2
    F93=F93A+SL3*RES1+SR3*RES2
    F94=F94A+SL4*RES1+SR4*RES2
    F95=F95A+SL5*RES1+SR5*RES2
    F96=F96A+SL6*RES1+SR6*RES2
    F97=F97A+SL7*RES1+SR7*RES2
    F98=F98A+SL8*RES1+SR8*RES2
    F99=F99A+SR9*RES2
    IF(F96.LE.0.0)ZSTAR=Z
    IF(F92.LE.0.0)GO TO 125
    IF(F96.LE.0.0)GO TO 125
    ZSTAR=96.
    IF(MF1.LT.2)GO TO 15
    IF(Z.GE.ZMAX)GO TO 125
    GO TO 10
30  IF1=IF1+1
    GO TO(100,200,300,400,500),IF1
100 MF1=1
    GO TO 600
 200 S1=RES1
    S2=RES2
    PHI1=DER1
    PHI2=DER2
    RES1=S1+.5*DZ*DER1
    RES2=S2+.5*DZ*DER2
    Z=Z+.5*DZ
    GO TO 600
300 PHI1=PHI1+2.0*DER1
    PHI2=PHI2+2.0*DER2
    RES1=S1+.5*DZ*DER1
    RES2=S2+.5*DZ*DER2
    GO TO 600
400 PHI1=PHI1+2.0*DER1
    PHI2=PHI2+2.0*DER2
    RES1=S1+.5*DZ*DER1
    RES2=S2+.5*DZ*DER2
```

```
     Z=Z+.5*DZ
     GO TO 600
500  RES1=S1+(PHI1+DER1)*DZ/6.0
     RES2=S2+(PHI2+DER2)*DZ/6.0
     MF1=2
     IF1=0
600  GO TO 21
125  F91A=F91*NMAX
     F92A=F92*NMAX
     F93A=F93*NMAX
     F94A=F94*NMAX
     F95A=F95*NMAX
     F96A=F96*NMAX
     F97A=F97*NMAX
     F98A=F98*NMAX
     IF(F92A.LE.0.0)F92A=.00001
     IF(F93A.LE.0.0)F93A=.00001
     IF(F94A.LE.0.0)F94A=.00001
     IF(F95A.LE.0.0)F94A=.00001
     IF(F95A.LE.0.0)F95A=.00001
     IF(F96A.LE.0.0)F96A=.00001
     IF(F97A.LE.0.0)F97A=.00001
     IF(F98A.LE.0.0)F98A=.00001
     Z=0.0
SORT
PROCEDURE F91,F92,F93=SUL(REST,JC51,JC52,JC53,F91A,F92A,F93A)
     F91=DELAY(15,REST,F91A)
     F92=DELAY(15,REST,F92A)
     F93=DELAY(15,REST,F93A)
     IF(TIME.GT.REST)GO TO 19
     IF(F91.LE.0.0)F91=JC51*NMAX
     IF(F92.LE.0.0)F92=JC52*NMAX
     IF(F93.LE.0.0)F93=JC53*NMAX
19   CONTINUE
ENDPROCEDURE
PROCEDURE F94,F95,F96,F97,F98=HATX(REST,JC54,JC55,JC56,JC57,...
JC58,F94A,F95A,F96A,F97A,F98A)
     F94=DELAY(15,REST,F94A)
     F95=DELAY(15,REST,F95A)
     F96=DELAY(15,REST,F96A)
     F97=DELAY(15,REST,F97A)
     F98=DELAY(15,REST,F98A)
IF(TIME.GT.REST)GO TO 281
     IF(F94.LE.0.0)F94=JC54*NMAX
     IF(F95.LE.0.0)F95=JC55*NMAX
     IF(F96.LE.0.0)F96=JC56*NMAX
     IF(F97.LE.0.0)F97=JC57*NMAX
     IF(F98.LE.0.0)F98=JC58*NMAX
281  CONTINUE
ENDPROCEDURE
NOSORT
*
*    400 F-I FILTER
*
     F24A=.9058*F94
     F25A=.9058*F95
     F26A=.9058*F96
     F27A=.9058*F97
     F28A=.9058*F98
```

```
PROCEDURE F24,F25,F26,F27,F28=R2FILT(F2TM,F24A,F25A,F26A,F27A,F28A,...
JC54,JC55,JC56,JC57,KC58,NMAX)
    F24=DELAY(15,F2TM,F24A)
    F25=DELAY(15,F2TM,F25A)
    F26=DELAY(15,F2TM,F26A)
    F27=DELAY(15,F2TM,F27A)
    F28=DELAY(15,F2TM,F28A)
    IF(TIME.GT.F2TM)GC TC 282
    IF(F24.EQ.0.C)F24=.9058*NMAX*JC54
    IF(F25.EQ.0.C)F25=.9058*NMAX*JC55
    IF(F26.EQ.0.C)F26=.9058*NMAX*JC56
    IF(F27.EQ.0.C)F27=.9058*NMAX*JC57
    IF(F28.EQ.0.0)F28=.9058*NMAX*JC58
282 CONTINUE
ENDPROCEDURE
*
    F151=F91
    F152=F92
    F153=F93
    F154=.0942*F94
    F155=.0942*F95
    F156=.0942*F96
    F157=.0942*F97
    F158=.0942*F98
*
*   500 V-1 EXTRACTOR
*
    F273=F93
*
*   600 F-1 FILTER
*
    F291=F151
    F292=F152
    F293=.1384*F273
    F294=.1384*F154
    F295=.1384*F155
    F296=.1384*F156
    F297=.1384*F157
    F298=.1384*F158
*
    F303=.8616*F273
    F304=.8616*F154
    F305=.8616*F155
    F306=.8616*F156
    F307=.8616*F157
    F308=.8616*F158
*
*   1400 V-3 SULFUR DECANTER
*
PROCEDURE F324,F325,F326,F327,F328=R32FT(F32TM,F304,F305,F3C6,F307,...
F308,JC54,JC55,JC56,JC57,JC58)
    F324=DELAY(15,F32TM,F304)
    F325=DELAY(15,F32TM,F3C5)
    F326=DELAY(15,F32TM,F306)
    F327=DELAY(15,F32TM,F307)
    F328=DELAY(15,F32TM,F3C8)
    IF(TIME.GT.F32TM)GC TO 369
    IF(F324.EQ.0.C)F324=.78043*JC54*NMAX
    IF(F325.EQ.0.0)F325=.78043*JC55*NMAX
```

```
      IF(F326.EQ.0.0)F326=.78043*JC56*NMAX
      IF(F327.EQ.0.0)F327=.78043*JC57*NMAX
      IF(F328.EQ.0.0)F328=.78043*JC58*NMAX
369 CONTINUE
CALL DEBUG(2,0.0)
ENDPROCEDURE
      F383=F303
*
*     700 V-1 WASH TANK
*
      F474=F264
      F391=F291
      F392=F292
      F393=111247*F293
      F394=5.1151*F294+4.1151*F474
      F395=5.094*F295
      F396=5.094*F296
      F397=4.3418*F267+5.3418*F297
      F398=6.729*F298+5.7268*F268+5.7268*F558
*
*     800 F-1 FILTER
*
      F478=.10945*F398+1.109*F268+1.109*F558
      F451=F391
      F452=F392
      F453=.0575*F393
      F454=.0573*(F394+F474)
      F455=.0575*F395
      F456=.0575*F396
      F457=.0548*(F397+F267)
      F458=.1241*(F398+F478)
*
      F423=.8414*F393
      F424=.8378*(F394+F474)
      F425=.8414*F395
      F426=.8414*F396
      F427=.8023*(F397+F267)
      F428=.6577*(F398+F478)
      F414=.1049*(F394+F474)
      F415=.1011*F395
      F416=.1011*F396
      F417=.1429*(F397+F267)
      F418=.2182*(F398+F478)
      F413=.1011*F393
*
*
*     900 ME-1 DRYER (F53-CLEAN COAL PRODUCT)
*
      F531=F451
      F532=F452
      F533=F453
      F534=F454
      F535=F455
      F536=F456
      F537=F457
      F538=.20*F458
      F468=.80*F458
*
*     1600 E-1 CONDENSER 1600 V-1 DECANTER
```

```
*
     F488=.9937*F468
     F518=F488
*
*    1500 V-1 DECANTER
*
     F403=F423
     F404=F424
     F405=F425
     F406=F426
     F407=F427
     F408=F428
     F333=F423
     F438=.835*F408
     F144A=.165*F404
     F145A=.165*F405
     F146A=.165*F406
     F147A=.165*F407
     F148A=.165*F408
PROCEDURE F144,F145,F146,F147,F148=HRS(F14TM,F144A,F145A,F146A,...
F147A,F148A,JC54,JC55,JC56,JC57,JC58)
     F144=DELAY(15,F14TM,F144A)
     F145=DELAY(15,F14TM,F145A)
     F146=DELAY(15,F14TM,F146A)
     F147=DELAY(15,F14TM,F147A)
     F148=DELAY(15,F14TM,F148A)
     IF(TIME.GT.F14TM)GO TO 199
     IF(F144.EQ.0.0)F144=.121*JC54*NMAX
     IF(F145.EQ.0.0)F145=.0615*JC55*NMAX
     IF(F146.EQ.0.0)F146=.1612*JC56*NMAX
     IF(F147.EQ.0.0)F147=.0588*JC57*NMAX
     IF(F148.EQ.0.0)F148=1.437*JC58*NMAX
199 CONTINUE
ENDPROCEDURE
     F433=.835*F403
     F434=.835*F404
     F435=.835*F405
     F436=.835*F406
     F437=.835*F407
*
*    MAIN RECYCLE
*
     F44=F24+F144+F324
     F45=F25+F145+F325
     F46=F26+F146+F326
     F47=F27+F147+F327
     F48=F28+F148+F328
*
*
*    STREAM 4 CHEMISTRY
*
     F44VOL=2.157692*F48*3.785
     F44C=F44*MW4+F46*MW6+F47*MW7+F48*MW8
     S44PCT=F44*MW4/F44C*33.3/.4
     F46PCT=F46*MW6/F44C*100./.7
     H48PCT=F48*MW8/F44C*100.+F47*MW8/(2.*F44C)*100.
     TOTAL=S44PCT+H48PCT+F46PCT
     S44PCT=100*S44PCT/TOTAL
     H48PCT=100*H48PCT/TOTAL
```

```
      F46PCT=100*F46PCT/TOTAL
      S44CN=F44*453./F44VOL
      F45CN=F45*453./F44VOL
      F46CN=F46*453./F44VOL
      H47CN=F47*453./F44VOL
      KS46=(F46CN*1.0E-42)/(H47CN**3)
      KFII45=F45CN*S44CN/H47CN
      II4=(F46CN*9+S44CN*4+F45CN*4+H47CN)/2
      EH45=.771+.059*ALOG10(F46CN/F45CN)
*
*     MIXER CHEMISTRY
*
      FMXVOL=2.157692*H2OMX*3.785
      PH47=-ALOG10(H47CN)
      FMX=SO4MX*MW4+FE3MX*MW6+ACMX*MW7+H2OMX*MW8
      SMXPCT=SO4MX*MW4/FMX*33.3/.4
      FMXPCT=FE3MX*MW6/FMX*100./.7
      TOTAL=SMXPCT+FMXPCT+HMXPCT
      SMXPCT=100*SMXPCT/TOTAL
      FMXPCT=100*FMXPCT/TOTAL
      HMXPCT=H2OMX*MW8/FMX*100.+ACMX*MW8/(2.*FMX)*100.
      HMXPCT=100*HMXPCT/TOTAL
      SMXCN=SO4MX*453./FMXVOL
      F2MXCN=FE2MX*453./FMXVOL
      F3MXCN=FE3MX*453./FMXVOL
      HMXCN=ACMX*453./FMXVOL
      KSMX=(F3MXCN*1.0E-42)/(HMXCN**3)
      KFIIMX=F2MXCN*SMXCN/HMXCN
      IMX=(F3MXCN*9.+SMXCN*4.+F2MXCN*4+HMXCN)/2.
      PHMX=-ALOG10(HMXCN)
      EHMX=.771+.059*ALOG10(F3MXCN/F2MXCN)
     SO4SMX=EXP(2.3025*(9.83E-03*(EHMX-.338+.0688*PHMX)))
*
*     STREAM 5 CHEMISTRY
*
      F54VOL=2.157692*F58*3.785
      F54C=F54*MW4+F56*MW6+F57*MW7+F58*MW8
      S54PCT=F54*MW4/F54C*33.3/.4
      F56PCT=F56*MW6/F54C*100./.7
      H58PCT=F58*MW8/F54C*100.+F57*MW8/(2.*F54C)*100.
      TOTAL=S54PCT+F56PCT+H58PCT
      S54PCT=S54PCT*100/TOTAL
      F56PCT=F56PCT*100/TOTAL
      H58PCT=H58PCT*100/TOTAL
      S54CN=F54*453./F54VOL
      F55CN=F55*453./F54VOL
      F56CN=F56*453./F54VOL
      H57CN=F57*453./F54VOL
      KS56=(F56CN*1.0E-42)/(H57CN**3)
      KFII55=F55CN*S54CN/H57CN
      II5=(F56CN*9+S54CN*4+F55CN*4+H57CN)/2.
      PH57=-ALOG10(H57CN)
      EH55=.771+.059*ALOG10(F56CN/F55CN)
*
*     STREAM 9 CHEMISTRY
*
      F98VOL=F98*2.157692*3.785
      F9C=F94*MW4+F96*MW6+F97*MW7+F98*MW8
      F94CON=F94*453./F98VOL
```

```
      F95CON=F95*453./F98VOL
      F96CCN=F96*453./F98VOL
      F97CON=F97*453./F98VOL
      F94PCT=(F94*MW4)/F9C*33.3/.4
      F98PCT=F98*MW8/F9C*100.+F97*MW8/(2.*F9C)*100.
      TOTAL=F94PCT+F96PCT+F98PCT
      F94PCT=100*F94PCT/TOTAL
      F96PCT=100*F96PCT/TOTAL
      F98PCT=100*F98PCT/TOTAL
      KFII95=F95CCN*F94CCN/F97CCN
      KS96=(F96CON*1.0E-42)/(F97CCN**3)
      PH9=-ALOG10(F97CCN)
      V=(F96CON*9.+F95CON*4.+F94CCN*4.+F97CCN)/2.
      EH95=.771+.059*ALOG10(F96CON/F95CON)
*
*
*     STREAM 16 CHEMISTRY (IRON SULFATE REMOVAL)
*
      F16VOL=2.157692*F168*3.785
      F16C=F164*MW4+F166*MW6+F167+F168*MW8
      F164PT=F164*MW4/F16C*33.33/.4
      F166PT=F166*MW6/F16C*100./.6994
      F168PT=F167*100/(2.*F16C)/.1111+F168*MW8*100/F16C
      TOTAL=F164PT+F166PT+F168PT
      F164PT=F164PT*100/TOTAL
      F166PT=F166PT*100/TOTAL
      F168PT=F168PT*100/TOTAL
      F164CN=F164*453./F16VOL
      F165CN=F165*453./F16VOL
      F166CN=F166*453./F16VOL
      F167CN=F167*453./F16VOL
      KS166=(F166CN*1.0E-42)/(F167CN**3)
      KF2165=F164CN*F165CN/F167CN
      PH167=-ALOG10(F167CN)
      EH16=.771+.059*ALOG10(F166CN/F165CN)
*
*     STREAM 18 CHEMISTRY(1100 F-1 FILTER RESIDUE)
*
      F18VOL=2.157692*F188*3.785
      F184PT=F184*MW4/F18C*33.33/.4
      F186PT=F186*MW6/F18C*100./.6994
      F188PT=F188*MW8*100./F18C+F187*100./(2.*F18C)/.1111
      TOTAL=F184PT+F186PT+F188PT
      F184PT=F184PT*100/TOTAL
      F186PT=F186PT*100/TOTAL
      F188PT=F188PT*100/TOTAL
      F184CN=F184*453./F18VOL
      F185CN=F185*453./F18VOL
      F186CN=F186*453./F18VOL
      F187CN=F187*453./F18VOL
      KS186=(F186CN*1.0E-42)/(F187CN**3)
      KF2185=F184CN*F185CN/F187CN
      PH187=-ALOG10(F187CN)
      EH18=.771+.059*ALOG10(F186CN/F185CN)
*
*     STREAM 19 CHEMISTRY (1100 F-1 FILTRATE)
*
      F19VOL=2.157692*F198*3.785
      F19C=F194*MW4+F196*MW6+F197*MW7+F198*MW8
```

```
      F194PT=F194*MW4/F19C*33.33/.4
      F196PT=F196*MW6/F19C*100./.6994
      F198PT=F198*MW8*100/F19C+F197*10C/(2.*F19C)/.1111
      TOTAL=F194PT+F196PT+F198PT
      F194PT=F194PT*1CC/TOTAL
      F196PT=F196PT*100/TOTAL
      F198PT=F198PT*100/TOTAL
      F194CN=F194*453./F19VOL
      F195CN=F195*453./F19VOL
      F196CN=F196*453./F19VOL
      F197CN=F197*453./F19VOL
      KS196=(F196CN*1.0E-42)/(F197CN**3.)
      KF2195=F194CN*F195CN/F197CN
      P4197=-ALCG10(F197CN)
      EH19=.771+.C59*ALCG10(F196CN/F195CN)
*
*     STEAM 21/24 CHEMISTRY (1200 F-1 FILTRATE)
*
      F21VOL=2.157692*F218*3.785
      F21C=F214*MW4+F216*MW6+F217*MW7+F218*MW8
      F214PT=F214*MW4/F21C*33.33/.4
      F218PT=F218*MW8*100/F21C+F217*10C/(2.*F21C)/.1111
      TOTAL=F214PT+F216PT+F218PT
      F214PT=F214PT*10C/TOTAL
      F216PT=F216PT*100/TOTAL
      F218PT=F218PT*1CC/TCTAL
      F214CN=F214*453./F21VOL
      F215CN=F215*453./F21VOL
      F216CN=F216*453./F21VOL
      F217CN=F217*453./F21VOL
      KS216=(F216CN*1.0E-42)/(F217CN**3)
      KF2215=F214CN*F215CN/F217CN
      PH217=-ALCG10(F217CN)
      EH21=.771+.C59*ALCG10(F216CN/F215CN)
*
*     STREAM 7 CHEMISTRY (INPUT TO FLUIDIZED BED)
*
      F7VOL=2.157692*F78*3.785
      F7C=F74*MW4+F76*MW6+F77*MW7+F78*MW8
      F74PT=F74*MW4/F7C*33.33/.4
      F76PT=F76*MW6*100./F7C/.6994
      F78PT=F78*MW8*100./F7C+F77*100./(2.*F7C)/.1111
      TOTAL=F74PT+F76PT+F78PT
      F74PT=100*F74PT/TOTAL
      F76PT=100*F76PT/TCTAL
      F78PT=100*F78PT/TOTAL
      F74CN=F74*453./F7VOL
      F75CN=F75*453./F7VOL
      F76CN=F76*453./F7VCL
      F77CN=F77*453./F7VCL
      KF275=F74CN*F75CN/F77CN
      KS76=(F76CN*1.0E-42)/(F77CN**3)
      I7=(F74CN*4+F75CN*4+F76CN*9+F77CN)/2.
      PH7=-ALOG10(F77CN)
      EH7=.771+.059*ALCG10(F76CN/F75CN)
*
*     STREAM 2 CHEMISTRY (400F-1 FILTRATE (RECYCLE))
*
      F2VCL=2.157692*F28*3.785
```

```
      F2C=F24*MW4+F26*MW6+F27+F28*MW8
      F24PT=F24*MW4/F2C*33.33/.4
      F26PT=F26*MW6*100./F2C/.6994
      F28PT=F28*MW8*100/F2C+F27*100./(2.*F2C)/.1111
      TOTAL=F24PT+F26PT+F28PT
      F24PT=F24PT*100/TOTAL
      F26PT=F26PT*100/TOTAL
      F28PT=F28PT*100/TOTAL
      F24CN=F24*453./F2VCL
      F25CN=F25*453./F2VCL
      F26CN=F26*453./F2VCL
      F27CN=F27*453./F2VCL
      KS26=(F26CN*1.0E-42)/(F27CN**3)
      KF226=F24CN*F25CN/F27CN
      I2=(F24CN*4+F25CN*4+F26CN*9+F27CN)/2.
      PH2=-ALOG10(F27CN)
      EH2=.771+.059*ALOG10(F26CN/F25CN)
*
*     STREAM 32 CHEMISTRY (FILTRATE FROM 600 F-1 AND
*                          AQUEOUS PRODUCT OF 1400 V-1
*                          DECANTER (RECYCLE))
*
      F32VCL=2.157692*F328*3.785
        F32C=F324*MW4+F326*MW6+F327+F328*MW8
      F324PT=F324*MW4/F32C*33.33/.4
      F326PT=F326*MW6*100./F32C/.6994
      F328PT=F327*100./(2.*F32C)/.1111+F328*MW8*100./F32C
      TOTAL=F324PT+F326PT+F328PT
      F324PT=F324PT*100/TOTAL
      F326PT=F326PT*100/TOTAL
      F328PT=F328PT*100/TOTAL
      F324CN=F324*453./F32VOL
      F325CN=F325*453./F32VOL
      F326CN=F326*453./F32VOL
      F327CN=F327*453./F32VOL
      KS326=(F326CN*1.0E-42)/(F327CN**3)
      KF2325=F325CN*F324CN/F327CN
      PH32=-ALOG10(F327CN)
      EH32=.771+.059*ALOG10(F326CN/F325CN)
*
*
*     STREAM 14 CHEMISTRY (FRACTION OF 1500 V-1 PRODUCT (RECYCLE))
*
      F14VCL=2.157692*F148*3.785
      F14C=F144*MW4+F146*MW6+F147+F148*MW8
      F144PT=F144*33.33*MW4/F14C/.4
      F146PT=F146*MW6*100./F14C/.6994
      F148PT=F148*MW8*100/F14C+F147*100./(2.*F14C)/.1111
      TOTAL=F144PT+F146PT+F148PT
      F144PT=F144PT*100/TOTAL
      F146PT=F146PT*100/TOTAL
      F148PT=F148PT*100/TOTAL
      F144CN=F144*453./F14VOL
      F145CN=F145*453./F14VOL
      F146CN=F146*453./F14VCL
      F147CN=F147*453./F14VOL
      KS146=(F146CN*1.0E-42)/(F147CN**3)
      KF2145=F145CN*F144CN/F147CN
      I14=(F145CN*4+F146CN*9+F144CN*4.+F147CN)/2.
```

```
    PH14=-ALOG10(F147CN)
    EH14=.771+.059*ALOG10(F146CN/F145CN)
*
TERMINAL
METHOD RECT
TIMER DELT=.1,OUTDEL=1.,PRDEL=1.,FINTIM=50.
TITLE  COAL DESULFURIZATION  STARTUP
    OUTPUT ZSTAR,F99
*     SULFATE STREAMS
OUTPUT F44,SO4MX,F54,F74,F94
OUTPUT F184,F194,F214,F264,F224,F244
OUTPUT F144,F324,F24,F394
*    FERROUS STREAMS
OUTPUT F45,FE2MX,F55,F75,F95
OUTPUT F185,F195,F215,F225,F245
OUTPUT F145,F325,F25,F395
*    FERRIC STREAMS
OUTPUT F46,FE3MX,F56,F76,F96
OUTPUT F186,F196,F216,F226,F246
OUTPUT F146,F326,F26,F396
*    ACID STREAMS
OUTPUT F47,ACMX,F57,F77,F97
OUTPUT F187,F197,F217,F227,F267,F247
OUTPUT F147,F327,F27,F397
*        WATER STREAMS
OUTPUT F48,H2OMX,F58,F78,F98
OUTPUT F328,F28,F148
*       PYRITE STREAMS
OUTPUT F12,FEPYR,F52,F72,F92
*        IRON CHEMISTRY EH-PH
OUTPUT EH45,EHMX,EH55,EH95
*         PH
OUTPUT PH47,PHMX,PH57,PH7,PH9
OUTPUT PH2,PH14,PH32,PH47
OUTPUT PH167,PH187,PH217,PH32
*
*        IRON CHEMISTRY  FE(OH)3 SOLUBILITY PRODUCT
OUTPUT KS46,KSMX,KS56,KS76,KS96
OUTPUT KS166,KS186,KS196,KS216
OUTPUT KS26,KS326,KS146,KS46
*      IRON CHEMISTRY (FESO4 SOLUBILITY PRODUCT)
OUTPUT KFII45,KFIIMX,KFII55,KFII95
OUTPUT KF226,KF2145,KF2325,KFII45
OUTPUT KF2165,KF2185,KF2195,KF2215
*  TERNARY DATA
OUTPUT S44PCT,F46PCT,H48PCT,SMXPCT,FMXPCT,HMXPCT
OUTPUT S54PCT,F56PCT,H58PCT
OUTPUT F74PT,F76PT,F78PT,F24PT,F26PT,F28PT
OUTPUT F94PCT,F96PCT,F98PCT
OUTPUT F164PT,F166PT,F168PT,F184PT,F186PT,F188PT
OUTPUT F194PT,F196PT,F198PT,F214PT,F216PT,F218PT
OUTPUT F324PT,F326PT,F328PT
OUTPUT F144PT,F146PT,F148PT
END
STOP
```

10.8.2 Conditions of Iron Precipitate Formation

In the coal desulfurization process there are three types of precipitate that can form: (1) ferrous sulfate, (2) ferric hydroxide, and (3) a solid solution of acidic to basic ferric sulfate. The purpose of this section is to discuss the conditions where these precipitates will form and indicate where additional data will be required to better define the process.

(1) Ferrous Sulfate

Sources in the literature[29] report the solubility of ferrous sulfate in terms of grams of H_2SO_4 and grams of $FeSO_4$ per fixed volume of solution. In order to interpolate and possibly extrapolate to different conditions, a relationship had to be developed to fit these data. The general form selected was

$$K_1 = [Fe^{2+}][SO_4^{2-}] \qquad (16)$$

Since many of the streams are quite acidic an additional relation was included:

$$K_2 = \frac{[HSO_4^-]}{[H^+][SO_4^{2-}]} \qquad (17)$$

The value of the equilibrium constant, K_2, is known to be $(10^{1.9})$[29]. Therefore, for pH values above pH 1.9, form (16) was used. Below pH 1.9 $[Fe^{2+}][HSO_4^-]/[H^+]$ was used as a relative indicator of ferrous sulfate solubility. Plots of K_1 and K_1/K_2 did not remain constant across the range

of solubility data. If forms (16) and (17) are correct for ferrous sulfate precipitation, then the variability must be due to variations of activity coefficients. Since activity coefficients vary in magnitude with ionic strength, it was decided to make ionic strength corrections. However, the determination of mean activity coefficients is quite difficult and it would require extensive experimentation. A less accurate but reasonable alternative that was used relates the constants directly to ionic strength using polynomial regression. CSMP was then used to calculate stream and vessel ionic strengths. These ionic strengths were used as input to determine the constants K_1 and K_1/K_2. The results were realistic when the ionic strengths calculated by the CSMP were within the range of the existing solubility data; however, the majority of desulfurization ionic strengths were beyond the range of the data. Extrapolation beyond the data yielded unrealistic results so the approach was limited in its usefulness. However, the terms $[Fe^{2+}][SO_4^{2-}]$ and $[Fe^{2+}][HSO_4^-]/[H^+]$ are useful as relative indicators of ferrous sulfate solubility. More data will definitely have to be generated to define the ferrous sulfate system.

(2) Ferric Hydroxide

The precipitate ferric hydroxide or ferric oxyhydroxide has a solubility product constant that varies with time and conditions of precipitation. Actually, many of the reported values are "apparent" solubility product constants rather than a solubility product constant in the thermodynamic sense. The solubility product relation is

$$K = Kw^3 \; [Fe^{3+}][H^+]^{-3} \qquad (18)$$

where $\quad Kw = [H^+][OH^-] = 1 \times 10^{-14}$

Values of K reported in the literature[22] vary from 10^{-37} to 10^{-44} at 25°C. In this process 10^{-37} will probably be most realistic because it corresponds to a value reported where rapid oxidation of Fe^{2+} occurs. There are several other factors that must be considered in arriving at a K for the coal desulfurization process: (1) K will vary with ionic strength in an inverse manner. (2) K is inversely proportional to temperature. (3) Laboratory values of K may not predict process conditions if the forward rate is slow. Further experimental data will be required to fill these gaps. Yet, the CSMP calculated quantity (18) will provide a relative indication of conditions in the process.

(3) Acidic-Basic Ferric Sulfate

The iron (III)-sulfate-water system has been well defined across the region of interest by Posnjak and Merwin[21] who experimentally developed a ternary diagram for the Fe_2O_3-SO_3-H_2O system. Theoretically, there should be little influence of the ferrous sulfate system on the structure of this ternary diagram. This appears to be true as indicated by a plot of FeO-Fe_2O_3-SO_3-H_2O data from Seidell[29] on a ternary diagram (Figure 55). The solubility limits plotted on this curve agree with those of Figure 46. This form of diagram was used in conjunction with CSMP molar amounts in an effort to determine where ferric sulfates would form in the process.

Figure 55. Solubility Diagram for the $FeO-Fe_2O_3-SO_3-H_2O$ System[29] at 50°C

⊙ $Fe_2O_3-SO_3-H_2O$ system

⊡ $FeO-Fe_2O_3-SO_3-H_2O$ system

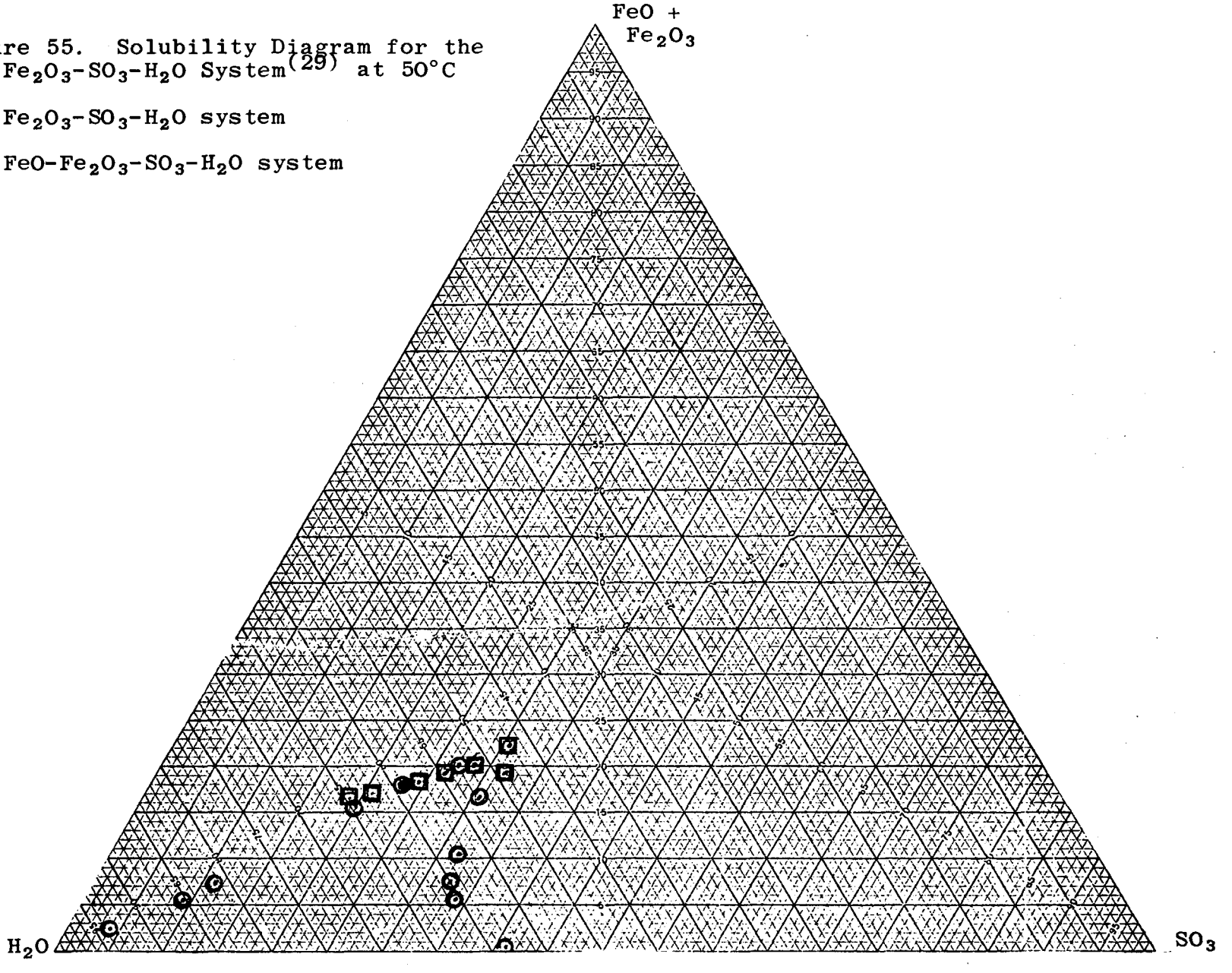

10.8.3 Construction of E_h-pH Diagrams for Sulfur Species

The following reactions are those that should be considered in the oxidation of pyrite[30].

$$FeS_{2(s)} \rightleftharpoons Fe^{2+} + 2S^{-}_{(aq)} \tag{19}$$

$$FeS_{2(s)} \rightleftharpoons Fe^{2+} + 2S^{o}_{(s)} + 2e^{-} \tag{20}$$

$$S^{2-} + H^{+} \rightleftharpoons HS^{-} \tag{21}$$

$$HS^{-} + H^{+} \rightleftharpoons H_2S_{(aq)} \tag{22}$$

$$H_2S_{(aq)} \rightleftharpoons S^{o}_{(s)} + 2H^{+} + 2e^{-} \tag{23}$$

$$HS^{-}_{(aq)} \rightleftharpoons S^{o}_{(s)} + H^{+} + 2e^{-} \tag{24}$$

$$S^{o}_{(s)} + 4H_2O \rightleftharpoons SO_4^{2-} + 8H^{+} + 6e^{-} \tag{25}$$

$$SO_4^{2-} + H^{+} \rightleftharpoons HSO_4^{-} \tag{26}$$

$$H_2S + 4H_2O \rightleftharpoons SO_4^{2-} + 10H^{+} + 8e^{-} \tag{27}$$

$$HS^{-} + 4H_2O \rightleftharpoons SO_4^{2-} + 10H^{+} + 9e^{-} \tag{28}$$

$$S^{2-}_{(aq)} \rightleftharpoons S_{(s)} + 2e^{-} \tag{29}$$

The equilibrium constants for reactions (21) and (22) are 10^{-14} and 10^{-7} respectively. Hence the stable regions for S^{2-}, HS^- and H_2S can easily be determined.

Species	Stable pH Range	
S^{2-}	>14	(at pH=14, $[HS^-]=[S^{2-}]$)
HS^-	7-14	
H_2S	<7	

Therefore, Equations (24), (28), and (29) can be neglected in a study of pyrite oxidation in acid solutions.

Also, $K_{HSO_4^-} = 10^{1.9}$, which implies that HSO_4^- is the stable species below pH 1.9. The equations listed above can be used in conjunction with free energy data to determine the regions of stability for aqueous solutions.

From fundamental thermodynamics

$$\Delta F_r = \Delta F_r^{\circ} + RT\ln Q \qquad (30)$$

where ΔF_r = free-energy change of the reaction

ΔF_r° = standard free energy for the reaction

Q = reaction quotient

T = temperature, °K

R = gas constant, 0.001987 kcal/°k

and

$$\Delta F^{o} = nE^{o}f \tag{31}$$

$$\Delta F_{r} = nE_{h}f \tag{32}$$

where n = number of electrons transferred

f = Faraday constant, 23.06

E^{o} = standard reaction voltage at unit activity (reference: hydrogen)

E_{h} = total emf.

Then

$$E_{h} = E^{o} + \frac{RT}{nf} \ln Q \tag{33}$$

Equation (33) is the relation used to determine regions where certain species predominate in aqueous solutions. An example of how the actual equation is developed will be shown using Equation (27). The first step involves the determination of the standard free energy change for the reaction

$$\Delta F_{r}^{o} = \Delta F_{SO_4^{2-}} + 10\Delta F_{H^+} + 8\Delta F_{e^-} - \Delta F_{H_2S} - 4\Delta F_{H_2O}$$

$$= -177.34 + 0 + 0 - (-6.54) - 4(-56.69)$$

$$= 55.96$$

Then

$$E^{o} = 0.303$$

and

$$E_{h} = 0.303 + \frac{RT}{8f} \ln Q$$

$$= 0.303 + \frac{0.059}{8} \log Q$$

$$Q = \frac{[SO_4^{2-}][H^+]^{10}}{[H_2S]}$$

Then

$$E_h = 0.303 + 0.00738 \log \left(\frac{[SO_4^{2-}]}{[H_2S]}\right) - 0.0738 \text{ pH}$$

An E_h-pH curve for this equation is drawn for the condition $[SO_4^{2-}] = [H_2S]$ which reduces the equation to:

$$E_h = 0.303 - 0.0738 \text{ pH}$$

Since equation (27) shows the transition from the -2 to +6 valence state, it will not be useful to isolate the stable region of sulfur. The equations that can be used to isolate the stable sulfur region are (23), (25), and (26). Equation (19) can be neglected because it has no E_h-pH dependency. Equations (21) and (22) were already used to isolate regions of sulfide ion stability. Finally, equation (20) has an E_h of approximately -0.44 in all regions of interest. The E_h equations are plotted in Figure 56. Superimposed on the E_h lines are regions of process operation when ferric ions are regenerated in the mixer.

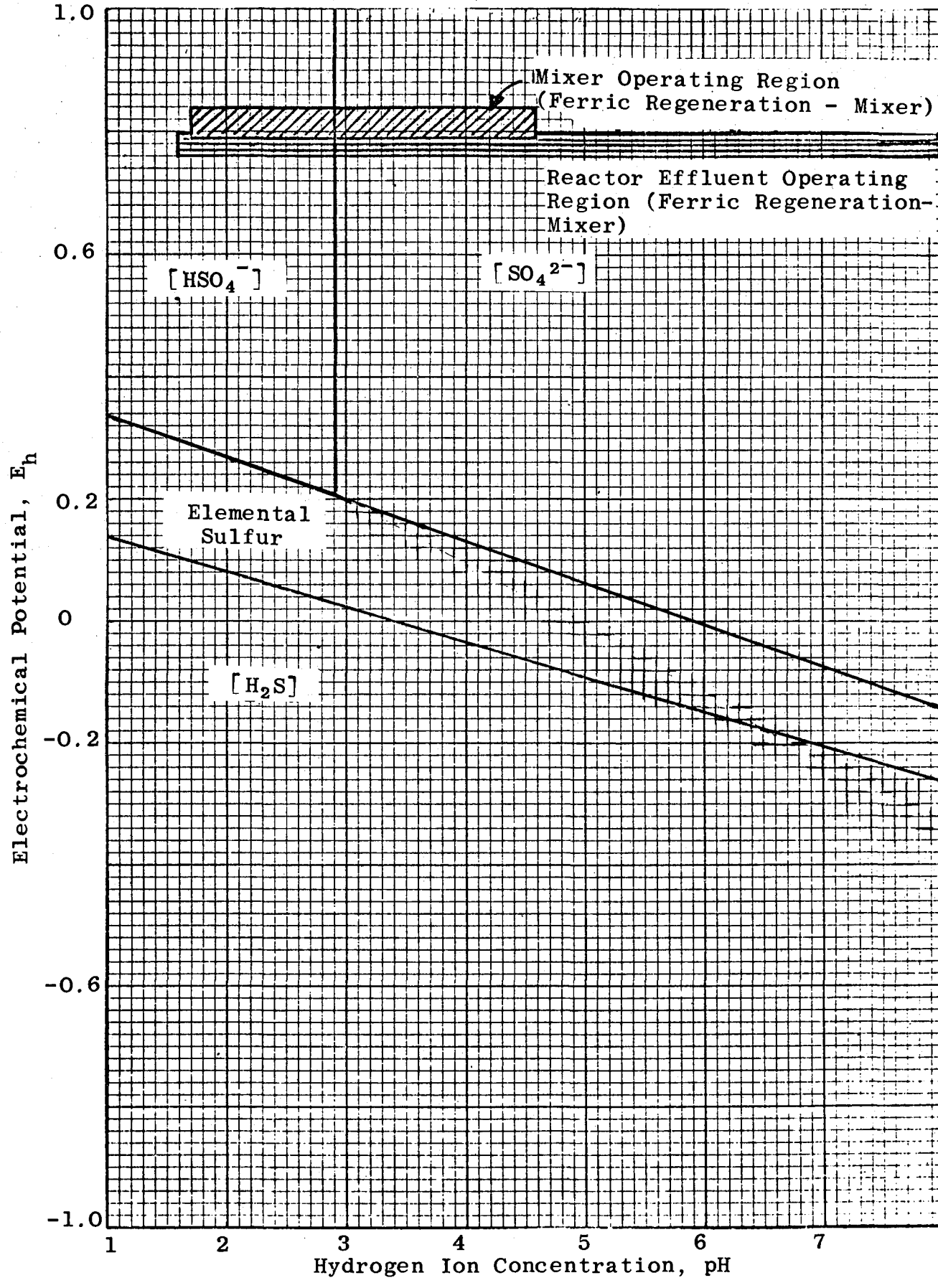

Figure 56. Mixer and Reactor Operating Regions on a Sulfur-Water E_h-pH Stability Diagram

10.8.4 Calculations of the Effect of Ferric Ion Regeneration in the Mixer

As indicated in Section 7.3.1 the small improvement in overall product quality resulting from adding oxygen and make-up acid to the Mixer becomes more significant when viewed from the standpoint of residence time. The relationship developed was

$$t = \frac{1}{K_L Y^2} \left[\frac{1}{f_t} - \frac{1}{f_o} \right] \qquad (14)$$

where f_o = reactor influent weight ratio, pyrite/coal
f_t = reactor effluent weight ratio, pyrite/coal
t = time in reactor

The "reactor" system here is intended to be the entire Mixer-Reactor system of the design.

Assume:

(1) Influent weight of coal/hour = 17,461 lb mol/hr
(2) Influent weight of pyrite/hour = 135.87 lb mol/hr
(3) $K_L Y^2 = (31.81)(0.7)^2 = 15.59$, held constant

Then

$$f_o = 100 \times \frac{135.87(119.9)}{17461(13)} = 0.0718 \text{ lb pyrite/lb coal}$$

where 119.9 = molecular weight of pyrite
13.0 = molecular weight of coal

Examine three different levels of f_t: 5.0%, 4.4% and 5.5% of the initial level.

Then $f_t = 0.050 \times 0.0718 = 0.00359$ for 5.0%
$f_{t'} = 0.044 \times 0.0718 = 0.00315$ for 4.4%
$f_{t''} = 0.055 \times 0.0718 = 0.00395$ for 5.5%

Case 1 -- Change in residence time to reduce pyrite effluent from 5.0% to 4.4% of initial:

a. $t = \frac{1}{15.59} \quad \frac{1}{0.00359} - \frac{1}{0.0718} = 16.97$ hrs

b. $t' = \frac{1}{15.59} \quad \frac{1}{0.00315} - \frac{1}{0.0718} = 19.47$ hrs

c. $\frac{19.47 - 16.97}{16.97} \times 100 = 14.73\%$ increase

Case 2 -- Change in residence time to reduce pyrite effluent from 5.5% to 4.4% of initial:

a. $t' = 19.47$ hrs., from above

b. $t'' = \frac{1}{15.59} \quad \frac{1}{0.00395} - \frac{1}{0.0718} = 15.35$ hrs

c. $\frac{19.47 - 15.35}{15.35} \times 100 = 26.84\%$ increase

TECHNICAL REPORT DATA
(Please read Instructions on the reverse before completing)

1. REPORT NO. EPA-600/2-75-051	2.	3. RECIPIENT'S ACCESSION NO.
4. TITLE AND SUBTITLE Conceptual Design of a Commercial Scale Plant for Chemical Desulfurization of Coal		5. REPORT DATE September 1975
		6. PERFORMING ORGANIZATION CODE
7. AUTHOR(S) W. F. Nekervis and E. F. Hensley		8. PERFORMING ORGANIZATION REPORT NO.
9. PERFORMING ORGANIZATION NAME AND ADDRESS Dow Chemical, U.S.A. Michigan Division Midland, Michigan 48640		10. PROGRAM ELEMENT NO. 1AB013; ROAP 21ADD-097
		11. CONTRACT/GRANT NO. 68-02-1302
12. SPONSORING AGENCY NAME AND ADDRESS EPA, Office of Research and Development Industrial Environmental Research Laboratory Research Triangle Park, NC 27711		13. TYPE OF REPORT AND PERIOD COVERED Final; 6/73-9/75
		14. SPONSORING AGENCY CODE

15. SUPPLEMENTARY NOTES

16. ABSTRACT

The report presents a conceptual design and an economic evaluation of a 9070 metric ton per day plant for the chemical removal of pyritic sulfur from coal. All supporting facilities are included for a self-sufficient operating complex with purchased water and power. The process engineering is complete through a capital cost estimate. Computer augmented studies are included for the material and energy balances, selection of the reactor systems, monitoring of operating parameters, and economic sensitivity studies of process alternatives.

17. KEY WORDS AND DOCUMENT ANALYSIS

a. DESCRIPTORS	b. IDENTIFIERS/OPEN ENDED TERMS	c. COSATI Field/Group
Air Pollution Pyrite	Air Pollution Control	13B 08G
Chemical Cleaning	Stationary Sources	13H, 07A
Coal Preparation	Meyers Process	08I
Design	Ferric Sulfate Extraction	
Desulfurization		07D
Economic Analysis		05C

18. DISTRIBUTION STATEMENT Unlimited	19. SECURITY CLASS (This Report) Unclassified	21. NO. OF PAGES 607
	20. SECURITY CLASS (This page) Unclassified	22. PRICE

EPA Form 2220-1 (9-73)