Prepublication issue for EPA libraries
and State Solid Waste Management Agencies

ALTERNATIVES FOR HAZARDOUS WASTE MANAGEMENT IN THE ORGANIC CHEMICAL, PESTICIDES AND EXPLOSIVES INDUSTRIES

This final report (SW-151c) describes work performed
for the Federal solid waste management program
under contract no. 68-01-4127
and is reproduced as received from the contractor

Copies will be available from the
National Technical Information Service
U.S. Department of Commerce
Springfield, Virginia 22161

U.S. ENVIRONMENTAL PROTECTION AGENCY

1977

This report was prepared by Processes Research, Inc., Cincinnati, Ohio, under Contract No. 68-01-4127.

Publication does not signify that the contents necessarily reflect the views and policies of the U.S. Environmental Protection Agency, nor does mention of commercial products constitute endorsement by the U.S. Government.

An environmental protection publication (SW-151.c) in the solid waste management series.

CONTENTS

		Page
I.	EXECUTIVE SUMMARY	I - 1
	ALTERNATIVE TREATMENT PROCESSES	I - 3
	LAND DISPOSAL	I - 9
	INCINERATION	I - 9
	COST COMPARISON OF ALTERNATIVES	I - 10
	Organic Chemicals Industry	I - 10
	Pesticides Industry	I - 14
	Explosives Industry	I - 15
	Incineration	I - 15
	Chemical Landfill	I - 16
II.	INTRODUCTION AND SCOPE OF WORK	II - 1
III.	CONCLUSIONS	III - 1
IV.	METHODOLOGY	IV - 1
V.	ALTERNATIVE TREATMENT PROCESSES	V - 1
	ORGANIC CHEMICALS INDUSTRY	
	Heavy Ends from Purification Columns - Perchloroethylene Manufacture - Waste Stream No. 1	V - 1
	Heavy Ends from Purification Column - Nitrobenzene Manufacture - Waste Stream No. 2	V - 10
	Solid Tails from Solvent Recovery System - Chloromethane Solvent Manufacture - Waste Stream No. 3	V - 19
	Heavy Ends from Fractionator - Epichlorohydrin Manufacture Waste Stream No. 4	V - 29
	Centrifuge Residue Sludge - Toluene Diisocyanate Manufacture - Waste Stream No. 5	V - 38
	Heavy Ends from Ethylene Dichloride Recovery Still - Vinyl Chloride Monomer Manufacture - Waste Stream No. 6	V - 47

	Page
Heavy Ends from Methanol Recovery Column - Methyl Methacrylate Monomer Manufacture - Waste Stream No. 7	V - 55
Heavy Ends from Purification Column - Acrylonitrile Manufacture - Waste Stream No. 8	V - 59
Still Bottoms - Maleic Anhydride Manufacture - Waste Stream No. 9	V - 63
Lead Sludge from Settling Basin - Lead Alkyls Manufacture - Waste Stream No. 10	V - 68
Triethanolamine Column Heavies - Ethanolamines Manufacture - Waste Stream No. 11	V - 78
Still Bottoms from Stripping Column Furfural Manufacture - Waste Stream No. 12	V - 88
Filter Solids - Furfural Manufacture - Waste Stream No. 13	V - 97
Spent Reactor Catalyst - Fluorocarbon Manufacture- Waste Stream No. 14	V - 100
Still Bottoms from Fractionating Column - Chlorotoluene Manufacture - Waste Stream No. 15	V - 113
Distillation Residues from Batch Fractionating Towers - Chlorobenzene Manufacture - Waste Stream No. 16	V - 117
PESTICIDES INDUSTRY	
Spent Alkali Scrubbing Solution - Cyanuric Chloride Manufacture in Atrazine Production - Waste Stream No. 17	V - 121
Spent Activated Carbon from Adsorption Treatment - Trifluralin Manufacture - Waste Stream No. 18	V - 134
Filter Cake - Malathion Manufacture - Waste Stream No. 19	V - 144
Liquid Process Wastes - Malathion Manufacture - Waste Stream No. 20	V - 153

		Page
	Sulfur Sludge from Chlorination Unit - Parathion Manufacture - Waste Stream No. 21	V - 161
	EXPLOSIVES INDUSTRY	
	Spent Activated Carbon - Explosives Manufacture - Waste Stream No. 22	V - 171
	Red Water - Explosives Manufacture - Waste Stream No. 23	V - 179
	Waste Explosives - Explosives Manufacture - Waste Stream No. 24	V - 189
VI.	INCINERATION	VI - 1
	Summary and Basis Incineration Cost Summary Types of Incinerator Equipment Equipment Selection and Benefits References	
VII.	LAND DISPOSAL	VII - 1
	Description Cost Analysis References	

TABLES

Table	Title	Page
1 - 1	Summary - Alternative Treatment Process	I - 4
1 - 2	Treatment Processes Considered and Categorization of Processes by Effort Needed	I - 7
1 - 3	Cost Comparison of Alternatives	I - 11
2 - 1	Waste Streams	II - 3
4 - 2	Waste Stream Matrix	IV - 4
5 - 1	Approximate Composition of "Heavy Ends" Waste Stream	V - 3
6 - 1	Waste Stream Characteristics and Incineration System Selection	VI - 2
6 - 2	Waste Stream Incineration Cost Summary	VI - 5
7 - 1	Summary - Landfill Costs	VII - 2

FIGURES

Figure	Title	Page
4 - 1	Methodology for Alternative Study	IV - 2
5 - 1	Perchloroethylene Manufacture	V - 2
5 - 2	Heavy Ends from Purification Column - Perchloroethylene Manufacture, Waste Stream No. 1	V - 5
5 - 3	Nitrobenzene Manufacture	V - 11
5 - 4	Heavy Ends from Purification Column - Nitrobenzene Manufacture, Waste Stream No. 2	V - 14
5 - 5	Chlorinated Solvents Manufacture	V - 20
5 - 6	Solid Tails from Solvent Recovery, Chloromethane Manufacture, Waste Stream No. 3	V - 23
5 - 7	Epichlorohydrin Manufacture	V - 30
5 - 8	Heavy Ends from Fractionator - Epichlorohydrin Manufacture, Waste Stream No. 4	V - 32
5 - 9	Toluene Diisocyanate Manufacture	V - 39
5 - 10	Centrifuge Residue Sludge - Toluene Diisocyanate Manufacture, Waste Stream No. 5	V - 42
5 - 11	Vinyl Chloride Monomer Manufacture	V - 48
5 - 12	Heavy Ends from Ethylene Dichloride Recovery Still - Vinyl Chloride Monomer Manufacture - Waste Stream No. 6	V - 50
5 - 13	Methyl Methacrylate Manufacture	V - 56
5 - 14	Acrylonitrile Manufacture	V - 60
5 - 15	Maleic Anhydride Manufacture	V - 64
5 - 16	Lead Alkyls Manufacture	V - 69

Figure	Title	Page
5 - 17	Lead Sludge from Settling Basin - Lead Alkyls Manufacture, Waste Stream No. 10	V - 70
5 - 18	Ethanolamines Manufacture	V - 79
5 - 19	Triethanolamines Column Heavies - Ethanolamines Manufacture - Waste Stream No. 11	V - 81
5 - 20	Furfural Manufacture	V - 89
5 - 21	Still Bottoms and Filter Solids - Furfural Manufacture, Waste Stream No. 12 - 13	V - 91
5 - 22	Fluorocarbon Manufacture	V - 101
5 - 23	Spent Reactor Catalyst - Fluorocarbon Manufacture	V - 103
5 - 24	Spent Reactor Catalyst - Fluorocarbon Manufacture	V - 106
5 - 25	Chlorotoluene Manufacture	V - 114
5 - 26	Chlorobenzene Manufacture	V - 118
5 - 27	Atrazine Manufacture	V - 122
5 - 28	Cyanuric Chloride Manufacture - Spent Alkali Scrubbing Solution	V - 124
5 - 29	Vapor Compression Evaporator	V - 127
5 - 30	Trifluralin Manufacture	V - 135
5 - 31	Spent Activated Carbon from Adsorption Treatment - Trifluralin Manufacture - Waste Stream No. 18	V - 137
5 - 32	Malathion Manufacture	V - 145
5 - 33	Filter Cake - Malathion Manufacture, Waste Stream No. 19	V - 146
5 - 34	Liquid Waste - Malathion Manufacture, Waste Stream No. 20	V - 154

Figure	Title	Page
5 - 35	Parathion Manufacture	V - 162
5 - 36	Sulfur Sludge from Chlorination Unit - Parathion Manufacture - Waste Stream No. 21	V - 164
5 - 37	Spent Activated Carbon Explosives Manufacture, Waste Stream No. 22	V - 174
5 - 38	Batch Process TNT Manufacture	V - 180
5 - 39	Red Water Waste Disposal Process (Joliet AAP)	V - 182
5 - 40	Red Water Disposal - Tampella Process - Waste Stream No. 23	V - 184
5 - 41	Waste Explosives Train 1 - Explosives Manufacture Waste Stream No. 24	V - 192
5 - 42	Three Sludge System for Nitrogen Removal	V - 194
5 - 43	Common Wall Construction of 3-sludge System	V - 195
5 - 44	Process Flow Diagram for Three Sludge System	V - 196
5 - 45	Waste Explosives, Train 2 - Explosives Manufacture, Waste Stream No. 24	V - 198
6 - 1	Types of Incinerators and Their Application	VI - 9
6 - 2	Horizontally Fixed Liquid Waste Incineration System	VI - 10
6 - 3	Portable Rotary Kiln Incineration Units	VI - 13
6 - 4	Schematic of a Fluidized Bed Incinerator	VI - 16
7 - 1	Typical Cross Section Chemical (Secure) Landfill	VII - 6

SECTION I - EXECUTIVE SUMMARY

This report is one of a series of studies being conducted by the Hazardous Waste Management Division of the Office of Solid Waste to identify treatment process technology to be applied to potentially hazardous wastes.

In this study, potential alternative treatment methods are evaluated for a total of 24 waste streams (see Page II-3) selected from "Assessment of Industrial Hazardous Waste Practices of the Organic Chemicals, Pesticides and Explosives Industries," EPA contract study number 68-01-2919. The potential alternatives are the physical, chemical and biological processes identified in "Analysis of Potential Application of Physical, Chemical and Biological Treatment Techniques to Hazardous Waste Management," EPA contract study number 68-01-3554.

The primary objectives of this study are (1) to identify technically feasible treatment processes for each of the waste streams, which, as far as could be determined, are not presently being used in full-scale operation for the waste in question, but which have the potential to recover resources or energy and/or accomplish detoxification; (2) to compare the costs of the alternatives with land application and incineration, carried out in an environmentally sound manner; and (3) to provide an analysis of the advantages and disadvantages of each alternative from an environmental viewpoint. Consequently, the study

- Provides information on potentially feasible alternatives to existing inadequate disposal techniques, which could prove helpful, if the current

unacceptable practices are halted through the promulgation of new standards mandated by the Resource Conservation and Recovery Act of 1976 (Public Law 94-580).

- Provides information currently needed by industry and the private sector in their efforts to deal with increasing hazardous waste volumes.

- Identifies promising research and development and demonstration needs for those treatment processes having significant potential for hazardous waste management.

Table 1-3 (see Page I-10) provides a summary comparison of the cost of the alternative treatment process with incineration and chemical and sanitary landfills for each of the hazardous waste streams. Since the alternatives are conceptual, and were selected primarily for technical feasibility, some refinement of the cost figures is to be anticipated as a result of pilot testing.

Furthermore, due to the proprietary nature of some of the processes involved and the lack of specific information about chemical composition and physical properties for the potentially hazardous wastes, even the conceptual designs cannot be considered definitive. Consequently, the results of this study are directly related to the basic information, as available, in the previously mentioned Industry study, i.e., "Assessment of Industrial Hazardous Waste Practices in the Organic Chemicals, Pesticides and Explosives Industries."

Alternative Treatment Processes

Of the 24 potentially hazardous waste streams studied (see Page II-3) 16 are from organic chemical manufacturing, (streams No. 1 through 16); five from pesticides manufacturing, (streams No. 17 through 21); and three from the explosives industries, (streams No. 22 through 24). A summary of the alternative treatment processes selected, the benefits derived and the estimated total treatment costs for each of the waste streams appears in Table 1-1. Abbreviations for the process steps therein; i.e., type of unit treatment process and the process category indicating the degree of development, can be found in Table 1-2.

During the analysis phase of this study it became apparent that several alternative treatment methods might be feasible for some waste streams. In such cases only the most promising one was selected for analysis. Exceptions were made; however, to waste streams 11, 14, and 24, each of which was found to have two promising alternative methods (trains) of sufficient merit to warrant investigation and comparison of both trains. No promising on-site alternative treatment method, which could be considered practical, was identified for five of the waste streams (No. 7, 8, 9, 15 and 16). For these, Table 1-3 only compares the costs for incineration with land disposal.

The benefits derived from the operation of some of the alternative treatment processes include significant potential reductions in waste volumes, recovery of product or by-product and/or detoxification of wastes.

TABLE NO. 1 - 1

SUMMARY - ALTERNATIVE TREATMENT PROCESSES

Stream+ No.	Product and Typical Plant Size	Waste Stream Components	Waste Generation KKg*/yr.	Unit Treatment Process** (1)	(2)	(3)	(4)	Benefits Derived	Total Treatment Cost*** $/KKg. Waste	$/KKg. Prod.
1	Perchloroethylene 39,000 KKg/yr.	Hexachlorobutadiene Chlorobenzenes Chloroethanes Chlorobutadiene Tars	12,000	(DIS) P, IV	(DIS) P, V			90 Percent reduction in Waste. Recovery of Hexachlorobutadien. Detoxification.	-378.	-116.
2	Nitrobenzene 20,000 KKg/yr.	Crude Nitrated Aromatics	50	(SD) P, IV	(HY) C, III	(CAT) C, III		10 Percent reduction in waste 80 Percent converted to salable product. (Nitrobenzene)	1930.	4.83
3	Chloromethane 50,000 KKg/yr.	Hexachlorobenzene Hexachlorobutadiene Tars	300	(DIS) P, IV (5) (DIS) P, IV	(CL) C, III	(DIS) P, IV	(NEU) C, V	75 Percent reduction in waste volume. Salable Product (Carbon Tetrachloride)	646.	3.88
4	Epichlorohydrin 75,000 KKg/yr.	Epichlorohydrin Dichlorohydrin Chloroethers Trichloropropane Tars	4,000	(SE) P, III	(EVAP) P, III	(DIS) P, IV		75 Percent reduction in waste volume. Recovery of Epichlorohydrin	0.50	0.03
5	Toluene Diisocyanate 27,500 KKg/yr.	Polyurethane Ferric Chloride Isocyanates Tars	558	(HY) C, IV	(DIS) P, IV	(NEU) C, IV	(AL) B, III	Detoxification of waste. Partial waste recovery. (Toluene Diamine)	428.	8.69
6	Vinyl Chloride Monomer 136,000 KKg/yr.	1,2 Dichloroethane 1,1,2 Trichloroethane 1,1,1,2 Tetrachloroethane Tars	1,400	(DIS) P, III	(RED) C, IV	(RED) C, IV		80 Percent reduction in waste volume. Recovery of > 900MT of chlorinated Hydrocarbons.	-0.86	-0.01
7	Methyl Methacrylate 55,000 KKg/yr.	Hydroquinone Polymeric Residues	4,730	Not Applicable					—	—
8	Acrylonitrile 80,000 KKg/yr.	Acrylonitrile Higher Nitriles	160	Not Applicable				Not Applicable	—	—
9	Maleic Anhydride 11,000 KKg/yr.	Maleic Anhydride Fumaric Acid Chromogenic Compounds Tars	333	Not Applicable				Not Applicable	—	—

*KKg = 1 Metric Ton (MT)
**See Abbreviations in Table I-2
***Includes credit for material recovery where applicable.
A minus sign indicates a cost credit.
+See Table 2-1

TABLE NO. 1 - 1 (CONTINUED)

Stream No.	Product and Typical Plant Size	Waste Stream Components	Waste Generation KKg*/yr.	Unit Treatment Process** (1)	(2)	(3)	(4)	Benefits Derived	Total Treatment Cost*** $/KKg. Waste	$/KKg Prod.
10	Lead Alkyls 60,000 KKg/yr.	Lead	30,000	(FIL) P, V	(RED) C, IV	(FIL) P, V	(CAL) C, V	Recovery of lead oxide. Detoxification Reduction in waste volume	-47. (1)	-24. (1)
11	Ethanolamines 14,000 KKg/yr.	Triethanolamine Tars	1,120	TRAIN NO. 1 (CENT) P, V	(DIS) P, IV			Recovery of 280MT of TEA Low energy input	188.	15.
				TRAIN NO. 2 (SED) P, V	(DIS) P, IV			Same as above	128.	10.
12	Furfural 35,000 KKg/yr.	Sulfuric Acid Tars & Polymers	19,600	(SED) P, V	(HY) C, III	(COM) B, V		Recovery of 1000MT Sulfuric Acid. Eliminate landfill. Waste volume reduced 5 percent.	50.	29.
13	Furfural 35,000 KKg/yr.	Fines & Particulates From Stripped Hulls	350	(DIS) P, IV	(HY) C, III	(COM) B, V		Recovery of 158MT/yr. furfural	Combined with Stream No. 12	
14	Fluorocarbon 80,000 KKg/yr.	Antimony Pentachloride Carbon Tetrachloride Trichlorofluoromethane Organics	18	TRAIN NO. 1 (RED) C, IV	(DIS) (2) P, IV			Catalyst recovery Low energy input	5560.	1.25
				TRAIN NO. 2 (DIS) P, IV	(3)			Detoxification Reduction in waste volume	470.	0.11
15	Chlorotoluene 15,000 KKg/yr.	Benzylchloride Benzotrichloride	15	Not Applicable				Not Applicable	—	—
16	Chlorobenzene 32,000 KKg/yr.	Polychlorinated Aromatic Resinous Material	1,400	Not Applicable				Not Applicable	—	—
17	Atrazine 20,000 KKg/yr.	Water Sodium Chloride Insoluble Residues Caustic Cyanuric Acid	224,600	(NEU) C, V	(OZ) C, III	(AL) B, II	(EVAP) P, V	Detoxification Boiler feedwater generated. Salable Product. (Salt)	4.60	51.
18	Trifluralin 10,000 KKg/yr.	Spent Carbon Fluoroaromatics Intermediates and Solvents	1,150	(C&G) P, 7 (5) (COM) B, IV	(SE) P, III	(CENT) P, IV	(DIS) P, V	Recovery of 200MT/yr. of Chloroform. Reduction in Waste Volume of 50 percent Moderate energy utilization.	400.	46.

(1) Includes credit for Lead recovery
(2) Dechlorination
(3) Distillation
* KKg = 1 Metric Ton (MT)
** See Abbreviations in Table I-2
*** Includes credit for material recovery where applicable

TABLE 1 - 1 (CONTINUED)

Stream No.	Product and Typical Plant Size	Waste Stream Components	Waste Generation KKg*/yr.	Unit Treatment Process** (1)	(2)	(3)	(4)	Benefits Derived	Total Treatment Cost*** $/KKg. Waste	$/KKg. Prod.
19	Malathion 14,000 KKg/yr.	Filter Aid Toluene Insoluble Residues Dimethyl Dithiophosphoric Acid	1,826	(HY) C, V (5) (AL) B, III	(SS) P, IV	(SED) P, V	(COM) B, IV	Recovery of 1MT/day of Toluene, detoxification	93.	12.
20	Malathion 14,000 KKg/yr.	Malathion Toluene Impurities Sodium Hydroxide	14,350 (W) 350(D)	(SED) P, V	(RA) P, III	(DIS) P, V		Recovery of Toluene And Malathion. Total reuse of water	-0.38	-0.39
21	Parathion 20,000 KKg/yr.	Diethylthiophosphoric Acid	2,300	(SED) P, V	(UF) P, II	(FIL) P, V	(COM) B, IV	Recovery of 2000MT/yr. of sulfur Reduction of waste volume.	73.	8.35
22	Explosives 93,000 KKg/yr.	Activated Carbon Nitrobodies	350 (W) 200(D)	(SE) P, III	(DIS) P, IV	(CAL) C, V		Cost Savings because of carbon regeneration.	558. (W) 977. (D)	2.05
23	Explosives 30,000 KKg/yr.	Redwater	15,000	(INC) - Tampella Process C,V				Recovery of Sellite Est. @ $780,000. 99.5 percent reduction of waste	213.	106.
24	Explosives 125,000 KKg/yr.	Waste Explosives	250	TRAIN NO. 1 (C&G) P, V	(OX) C, IV	(ASL) B, IV	(AD) B, IV	COD reduced 80-97 percent. Recovery of energy. Total destruction of explos.	1580.	3.20
				TRAIN NO. 2 (C&G) P, V (5) (CAL) C, V	(RED) C, IV	(FIL) P, V	(EVAP) P, V	Moderate energy required Desensitizing of explos. Recovery of Metals	1930.(2)	3.85(2)

(1) Wet Oxidation
(2) Reduction
* KKg = 1 Metric Ton (MT)
** See Abbreviations in Table I-2
*** Includes credit for material recovery where applicable
(W) Wet Basis
(D) Dry Basis

Table 1-2

Unit Treatment Processes

Listed below are the physical, chemical and biological unit treatment processes utilized from the Treatment Study*. The selection of several unit treatment processes in proper sequence forms an Alternative Treatment Process.

Physical (P)

Air Stripping (AS)
Carbon Adsorption (CA)
Centrifugation (CENT)
Distillation (DIS)
Evaporation (EVAP)
Filtration (FIL)
Flocculation (FLOC)
Flotation (FLO)
Ion Exchange (IE)
Resin Adsorption (RA)
Reverse Osmosis (RO)
Sedimentation (SED)
Solvent Extraction (SE)
Steam Distillation (SD)
Steam Stripping (SS)
Ultrafiltration (UF)
Crushing and Grinding (C&G)

Chemical (C)

Calcination (CAL) or Incineration (INC)
Catalysis (CAT)
Chlorinolysis (CL)
Electrolysis (EL)
Hydrolysis (HY)
Neutralization (NEU)
Oxidation (OX) - Includes Chlorination
Ozonation (OZ)
Precipitation (PPT)
Reduction (RED) - Includes Dechlorination and Dehydrochlorination

Biological (B)

Activated Sludge (ASL)
Aerated Lagoon (AL)
Anaerobic Digestion (AD)
Composting (COM)
Trickling Filter (TF)
Waste Stabilization Pond (WSP)

* See Reference 2, Page IV-10

Table 1-2 (Continued)

Process Categories (Treatment Study*)

The category numbers described below indicate the approximate degree of process development. Each unit treatment process shown in Table 1-1 has a process category number designation.

No.	Description
I	Process is not applicable in a useful way to wastes of interest to this program.
II	Process might work in 5-10 years, but needs research effort first.
III	Process appears useful for hazardous wastes, but needs development work.
IV	Process is developed but not commonly used for hazardous wastes.
V	Process will be common to most industrial waste processors.

* See Reference 2, Page IV-10

Land Disposal

Of the 24 waste streams the three Explosive industry wastes, and waste stream No. 17 (Atrazine) were eliminated from landfill cost studies. The former because of obvious safety considerations and the latter because the huge water volume, 225,000 metric tons per year, is considered impractical to chemical landfill.

To comply with present and future environmental standards, many land destined hazardous wastes will probably be disposed in a chemical landfill. Lagoons, pits and ponds (lined, etc.) will also be used. For comparison purposes, however, the annual costs for a sanitary landfill were calculated so that this technique may be compared with chemical landfill. The impact on product cost and cost of waste disposal per metric ton can be compared.

Incineration

Of the 24 total waste streams, 19 were considered suitable for incineration. The rotary kiln was selected for 12 waste streams, the fluid bed for five, and a liquids incinerator for two. The Tampella process for waste stream 23 (red water) also includes a rotary kiln as part of the overall treatment system.

For environmental reasons and at EPA's direction, wastes with high heavy metal concentrations as contained in waste streams 10 and 14, are not to be incinerated. Neither were waste streams 2 and 15 considered for incineration because the volumes of their respective wastes were much too small to justify the capital investment. Waste stream 17 is not practical for incineration because of the large volume of brine in the wastes.

Cost Comparison of Alternatives

Table 1-3 presents a cost comparison of the alternative treatment methods with incineration and chemical and sanitary landfills for each of the potentially hazardous waste streams. Treatment and disposal costs are given per metric ton of waste processed and per metric ton of product produced. The latter, in conjunction with the selling price of the product gives a basis for evaluating the cost impact on the product. In the case of the alternative treatment methods proposed, the treatment cost (or credit) is given as a percentage of product selling price. While it would be more meaningful to relate treatment costs to product manufacturing costs, such costs were not available. It should be noted, however, that the cost impact will be greater when related to manufacturing costs.

In developing costs for the alternative treatment processes, it was assumed that sufficient land was available at the plant site and consequently land costs are not included.

Alternative Treatment Method

Organic Chemical Industry. As might be expected 75 percent of the potentially hazardous wastes in this classification are residues from distillation or fractionating columns (commonly referred to as still bottoms, heavy ends, solid tails, tarry residues, etc.). The alternative treatment methods for each of four waste streams (1, 4, 6 and 10-See Table 2-1) were found to have the lowest cost as compared to incineration and chemical landfill.

TABLE NO. 1 - 3

COST COMPARISON OF ALTERNATIVES

Stream No.	Product and Typical Plant Size	Waste Stream Components	Waste Generation KKg/year	Alternative* Treatment Processes: Cost $/KKg Waste	Cost Impact $/KKg Prod.	Prod. Selling Price $/KKg	Impact on Prod. Selling Price %	Sanitary Landfill: Cost $/KKg Waste	Cost Impact $/KKg Prod.	Chemical Landfill: Cost $/KKg Waste	Cost Impact $/KKg Prod.	Incineration: Cost $/KKg Waste	Cost Impact $/KKg Prod.
1	Perchloroethylene 39,000 KKg/yr.	Hexachlorobutadiene Chlorobenzenes Chloroethanes Chlorobutadiene Tars	12,000	-378.	-116.	390.	-29.8	10.	3.15	48.	16.	45.	14.
2	Nitrobenzene 20,000 KKg/yr.	Crude Nitrated Aromatics	50	1930.	4.83	510.	0.95	98.	0.24	157.	0.39	N.A.	N.A.
3	Chloromethane 50,000 KKg/yr.	Hexachlorobenzene Hexachlorobutadiene Tars	300	646.	3.88	320.	1.21	97.	0.58	128.	0.77	288. (1)	1.70 (1)
4	Epichlorohydrin 75,000 KKg/yr.	Epichlorohydrin Dichlorohydrin Choroethers Trichloropropane Tars	4,000	0.50	0.03	882.	0.003	17.	0.92	55.	2.90	84.	4.50
5	Toluene Diisocyanate 27,500 KKg/yr.	Polyurethane Ferric Chloride Isocyanates Tars	558	428.	8.69	1124.	0.77	97.	2.08	156.	3.34	231.	4.70
6	Vinyl Chloride Monomer 136,000 KKg/yr.	1,2 Dichloroethane 1,1,2 Trichloroethane 1,1,1,2 Tetrachloroethane Tars	1,400	-0.86	-0.01	300.	0.003	17.	0.25	67.	0.94	208.	2.10
7	Methyl Methacrylate 55,000 KKg/yr.	Hydroquinone Polymeric Residues	4,730	---	---	840.	N.A.	17.	1.43	76.	6.55	30.	2.50
8	Acrylonitrile 80,000 KKg/yr.	Acrylonitrile Higher Nitriles	160	---	---	590.	N.A.	98.	0.19	158.	0.31	350. (1)	1.10 (1)

N.A. - Not applicable
(1) One Shift Per Day
* Includes credit for materials recovery where applicable
A minus sign indicates a cost credit

TABLE 1 - 3 (CONTINUED)

Stream No.	Product and Typical Plant Size	Waste Stream Components	Waste Generation KKg/year	Alternative* Treatment Processes: Cost $/KKg Waste	Cost Impact $/KKg Prod.	Prod. Selling Price $/KKg	Impact on Prod. Selling Price %	Sanitary Landfill: Cost $/KKg Waste	Cost Impact $/KKg Prod.	Chemical Landfill: Cost $/KKg Waste	Cost Impact $/KKg Prod.	Incineration: Cost $/KKg Waste	Cost Impact $/KKg Prod.
9	Maleic Anhydride 11,000 KKg/yr.	Maleic Anhydride Fumaric Acid Chromogenic Compounds Tars	333	---	---	810.	N.A.	98.	2.95	166.	5.02	363.	12.
10	Lead Alkyls 60,000 KKg/yr.	Lead	30,000	-47.	24.	1,440.	-1.64	7.	3.50	61.	31.	N.A.	N.A.
11	Ethanolamines 14,000 KKg/yr.	Triethanolamine Tars	1,120	188. (Train I)	15.	790.	1.91	18.	1.40	77.	6.20	120.	9.60
				128. (Train II)	10.		1.30						
12	Furfural 35,000 KKg/yr.	Sulfuric Acid Tars and Polymers	19,600	50.	29.	1,035.	2.77	8.	4.50	76.	43.	32.	18.
13	Furfural 35,000 KKg/yr.	Fines & Particulates From Stripped Hulls	350	Included in Stream No. 12			---	---	---	---	---	143.	1.40
14	Fluorocarbon 80,000 KKg/yr.	Antimony Pentachloride Carbon Tetrachloride Trichlorofluoromethane Organics	18	5560. (Train I)	1.25	1,080.	0.12	98.	0.02	117.	0.03	N.A.	N.A.
				470. (Train II)	0.11		0.01						
15	Chlorotoluene 15,000 KKg/yr.	Benzylchloride Benzotrichloride	15	---	---	660.	---	98.	0.10	156.	0.17	N.A.	N.A.
16	Chlorobenzene 32,000 KKg/yr.	Polychlorinated Aromatic Resinous Material	1,400	---	---	570.	---	17.	0.77	70.	3.10	97.	4.20
17	Atrazine 20,000 KKg/yr.	Water Sodium Chloride Insoluble Residues Caustic Cyanuric Acid	224,600	4.60	51.	4,295.	1.2	6.	71.	N.A.	N.A.	N.A.	N.A.
18	Trifluralin 10,000 KKg/yr.	Spent Carbon Fluoro-aromatics Intermediates and Solvents	1,150	400.	46.	12,290.	0.37	18.	2.04	326.	38.	123.	14.
19	Malathion 14,000 KKg/yr.	Filter Aid Toluene Insoluble Residues Dimethyl Dithiophosphoric Acid	1,826	93.	12.	2,090.	0.57	18.	1.80	326.	43.	91.	12.

* Includes credit for materials recovery where applicable
N.A. - Not applicable

TABLE 1 - 3 (CONTINUED)

Stream No.	Product and Typical Plant Size	Waste Stream Components	Waste Generation KKg/year	Alternative* Treatment Processes: Cost $/KKg Waste	Cost Impact $/KKg Prod.	Prod. Selling Price $/KKg	Impact on Prod. Selling Price %	Sanitary Landfill: Cost $/KKg Waste	Cost Impact $/KKg Prod.	Chemical Landfill: Cost $/KKg Waste	Cost Impact $/KKg Prod.	Incineration: Cost $/KKg Waste	Cost Impact $/KKg Prod.
20	Malathion 14,000 KKg/yr.	Malathion Toluene Impurities Sodium Hydroxide	14,350(W) 350(D)	-0.38	-0.39	2,090.	-0.019	18.	0.44	76.	1.90	30. (W) 1240. (D)	31.
21	Parathion 20,000 KKg/yr.	Diethylthiophosphoric Acid	2,300	73.	8.35	1,918.	0.44	17.	2.	70.	8.	69. (2)	7.90 (2)
22	Explosives 93,000 KKg/yr.	Activated Carbon Nitrobodies	350(W) 200(D)	558. 977.	2.05	N.A.	N.A.	N.A.	N.A.	N.A.	N.A.	873. (W)(2) 1530. (D)(2)	3.30 (2)
23	Explosives 30,000 KKg/yr.	Redwater Nitrobodies of DNT	15,000	213.	106.	N.A.	N.A.	N.A.	N.A.	N.A.	N.A.	268.	134.
24	Explosives 125,000 KKg/yr.	Waste Explosives	250	1580. (Train I) 1930. (Train II)	3.20 3.85	N.A.	N.A.	N.A.	N.A.	N.A.	N.A.	1105.	2.20

(2) Two Shifts Per Day
(W) Wet
(D) Dry
N.A. - Not applicable
* Includes credit for materials recovery where applicable

Significantly, the impact on product selling price range from a low (credit) of minus $116 per metric ton (KKg) for Waste Stream 1 (in which the product, perchloroethylene, sells for $390 per metric ton) to a high of $29 per metric ton for Waste Stream 12 (in which the product, furfural, sells for $1,035 per metric ton). More significantly, whereas alternative treatment methods for Waste Streams 1 and 10 show some potential savings toward product costs, the other waste streams, for which alternatives were chosen, indicate a minor impact on product cost; i.e., less than 2 percent, with one exception - Waste Stream 12, at 2.8 percent.

In addition to the impact on the product selling price as described above, the annual treatment cost per metric ton of waste for each waste stream can be compared. The four waste streams mentioned above, as might be expected, are found to have the lowest treatment cost per metric ton as compared with incineration and landfills.

The annual treatment costs range from a low (credit) of minus $378 per metric ton for Waste Stream 1 which recovers 9,000 metric tons per year of hexachlorobutadiene, to a high of $1,930 per metric ton for Waste Stream 2, the waste volume of which is only 50 metric tons per year.

Pesticides Industry. In contrast to the "heavy ends" dominant in the organic chemical industry wastes, the five potentially hazardous waste streams in this industry have no resemblance to each other. The alternative treatment method for Waste Streams 17, 19 and 20 were found to have the lowest annual cost as compared to incineration and chemical landfill.

The impact on product selling price range from a low (credit) of minus $0.39 per metric ton for Waste Stream 20 (in which the product, malathion, sells for $2,090 per metric ton), to a high of $51 per metric ton for Waste Stream 17 (in which the product, atrazine, sells for $4,295 per metric ton). Significantly, although pesticide product costs and associated treatment costs are considerably higher, in general, than those in the organic chemical industry, the cost study indicates the impact on product selling price is less than 1.2 percent.

Similarly, the annual cost per metric ton of waste for each waste stream can be compared. The three waste streams mentioned above have the lowest treatment cost per metric ton as compared with incineration and landfills. The annual treatment costs range from a low (credit) of minus $0.38 per metric ton for Waste Stream 20 to a high of $400 per metric ton for Waste Stream 18, the waste volume of which is 1,150 metric tons per year.

Explosives Industry. The alternative treatment method for Waste Streams 22 and 23 were found to have the lowest annual cost per metric ton of product as compared with incineration. For Waste Stream 24, however, the cost of incineration per metric ton is lower than that of the alternative treatment method.

Incineration. Table 1-3 indicates incineration is least costly for Waste Streams 7, 12, and 13 combined, 18, 21, and 24 compared to alternative treatment methods and chemical landfill.

The impact on product selling price for the organic chemical and pesticide manufacturing industries ranges from a low of $1.10 per metric ton for Waste Stream 8 in which the product, acrylonitrile, sells for $590 per metric ton, to a high of $31 per metric ton for Waste Stream 20 in which the product, malathion, sells for $2,090 per metric ton. As might be expected, the impact on product cost and cost per metric ton of wastes are highest in the explosive industry, where extensive safety precautions and regulations must be built into the design of the incineration system. The estimated incineration costs for explosives Waste Streams 22, 23, and 24 were $873, $268, and $1,105 per metric ton, respectively. These compare with the unweighted average incineration cost of $166 per metric ton for the other potentially hazardous waste streams in the organic chemicals and pesticides industries.

Chemical Landfill. This is the least costly disposal method for nine waste streams (2, 3, 5, 8, 9, 11, 14, 15 and 16). Impact on product cost ranges from a low of $0.03 per metric ton for Waste Stream 14 to a high of $43 per metric ton for Waste Streams 12 and 19. For the nine waste streams mentioned above, the impact on product selling price in all cases is less than 0.7 percent.

The annual cost per metric ton of waste for each waste stream can be compared. The annual cost of chemical landfill ranges from a low of $48 per metric ton for Waste Stream 1 to a high of $326 per metric ton each for Waste Streams 18 and 19.

SECTION II - INTRODUCTION AND SCOPE OF WORK

The management of the nation's hazardous residues from the organic chemical, pesticides and explosives industries is coming to be recognized as inadequate. Evidence for this emanates from numerous case studies which demonstrate that public health and the environment are seriously threatened by the uncontrolled discharge of such waste materials to land or into the environment.[1]

A recent study[2] projects the total quantity of land-destined process waste streams by the foregoing industries in 1977 to be 3.67 million metric tons on a dry basis or 11.6 metric million tons on a wet basis. Currently, most of these wastes are land disposed or in some cases incinerated. The majority are being land disposed in poorly designed facilities and are handled in an environmentally inadequate manner. Incinerators used are not always equipped with adequate air and water pollution controls. Technology is available to treat most potentially hazardous waste streams; however, the use of such treatment methods is often costly compared with land disposal. Consequently, there has been little incentive for management to investigate alternative treatment methods.

The U. S. Environmental Protection Agency has commissioned this study to report on "Alternatives for Hazardous Waste Management in the Organic Chemical, Pesticides and Explosives Industries." (EPA has completed similar studies for other industry categories.)

The purpose of this report is to review, compare and recommend promising alternative treatment processes to incineration and land disposal for each of 24 specific potentially hazardous wastes. Each alternative scheme is evaluated

from the standpoint of energy or resource recovery, waste detoxification, immobilization and volume reduction. The priority order developed by the Office of Solid Waste, for hazardous waste management, provides preference for resource and/or energy recovery over detoxification or destruction which in turn are preferred over disposal and storage. This study incorporates the results of two previous recently completed EPA contracts; i.e.:

1. "Assessment of Industrial Hazardous Waste Practices in the Organic Chemical, Pesticides and Explosive Industries," EPA Contract No. 68-01-2919, by TRW Systems, Redondo Beach, California, referred hereinafter as the Industry Report.

2. "Analysis of Potential Application of Physical, Chemical and Biological Treatment Techniques to Hazardous Waste Management," EPA Contract No. 68-01-3554, by Arthur D. Little, Inc., Cambridge, Massachusetts, referred hereinafter as the Treatment Study.

The Industry Report identifies the types, amounts and sources of hazardous wastes generated and assesses the present treatment technology utilized. The Treatment Study provides a comprehensive, in-depth study of 44 chemical, physical and biological unit operations and processes having potential for treating hazardous wastes.

The "present study" analyzes existing process technology which has not been applied to the wastes in question on a full commercial scale. Twenty-four wastes, identified in the Industry Report, are selected for this study. See Table 2-1.

Table 2-1

Listed below are the 24 potentially hazardous waste streams selected for this study.

Waste Stream No.	Description
1	Heavy Ends from Purification Columns, Perchloroethylene Manufacture.
2	Heavy Ends from Purification Column, Nitrobenzene Manufacture.
3	Solid Tails from Solvent Recovery System, Chloromethane Solvent Manufacture.
4	Heavy Ends from Fractionator, Epichlorohydrin Manufacture.
5	Centrifuge Residue Sludge, Toluene Diisocyanate Manufacture.
6	Heavy Ends from Ethylene Dichloride Recovery Still, Vinyl Chloride Monomer Manufacture.
7	Heavy Ends from Methanol Recovery Column, Methyl Methacrylate Monomer Manufacture.
8	Heavy Ends from Purification Column, A Acrylonitrile Manufacture.
9	Still Bottoms, Maleic Anhydride Manufacture.
10	Lead Sludge from Settling Basin, Lead Alkyls Manufacture.
11	Triethanolamine Column Heavies, Ethanolamines Manufacture.
12	Still Bottoms from Stripping Column Furfural Manufacture.

Table 2-1 (Cont'd)

Waste Stream No.	Description
13	Filter Solids, Furfural Manufacture.
14	Spent Reactor Catalyst, Fluorocarbon Manufacture.
15	Still Bottoms from Fractionating Column, Chlorotoluene Manufacture.
16	Distillation Residues from Batch Fractionating Towers, Chlorobenzene Manufacture.
17	Spent Alkali Scrubbing Solution, Cyanuric Chloride Manufacture in Atrazine Production.
18	Spent Activated Carbon from Adsorption Treatment, Trifluralin Manufacture.
19	Filter Cake, Malathion Manufacture.
20	Liquid Process Waste, Malathion Manufacture.
21	Sulfur Sludge from Chlorination Unit, Parathion Manufacture.
22	Spent Activated Carbon, Explosives Manufacture.
23	Red Water, Explosives Manufacture.
24	Waste Explosives, Explosives Manufacture.

Several unit treatment steps, described in the Treatment Study, are combined into a treatment process for each waste stream, and these are compared with incineration and land disposal.

Utilizing the data developed from the above reports and other sources, this study compares the capital investment requirements, the estimated effect on product cost, and the cost/benefit ratio for each treatment system, with those of incineration and sanitary and chemical landfills.

REFERENCES

1. Office of Solid Waste Management Programs, Report to Congress, Disposal of Hazardous Wastes, Environmental Protection Publication SW-115, Washington, U. S. Government Printing Office, 1974, 110 pages.

2. Office of Solid Waste Management Programs, Assessment of Industrial Hazardous Waste Practices, Organic Chemicals, Pesticides and Explosives Industries, Environmental Publication SW-118c, 1976 (final report), Contract No. 68-01-2919.

SECTION III - CONCLUSIONS

As described in the "Methodology" section, it is most important to recognize that the alternative treatment techniques evaluated for most of the 24 potentially hazardous waste streams should be considered conceptual or potentially feasible at best. Nonetheless, the following conclusions can be drawn:

1. There are potential opportunities for finding economically and environmentally sound alternatives to incineration or land disposal for waste streams.

2. There are promising techniques for recovery of raw materials, resources, for recycling intermediates, for improving yield, and for sale of by-products.

3. There is a strong need for research, development and demonstration projects by the chemical manufacturers for their own plant wastes. Undoubtedly, the manufacturer is the one most qualified to determine the best approach to meet environmental standards for his process wastes considering those already described in this report or developing his own. Borne out in the report is the fact that there could be several alternative approaches for treatment. The opportunity, responsibilities and rewards in solving processing waste problems are with hazardous waste management and plant personnel.

4. Conversely, there are some waste streams which do not lend themselves to alternative treatments. See (Page I-3). This is especially true for those very low volume waste streams which do not contain chemicals worthy of recovery. However, and in any case, plant chemists can examine methods to detoxify as well as recover resources, even though the study found no suitable alternative treatment method for certain potentially hazardous waste streams.

5. Most interesting was the comparison of costs shown in Table 1-3. Many of the alternative treatment methods proposed could be very attractive from both an environmental and economic standpoint, and could be accomplished with a rather negligible impact on product costs, usually less than 1 percent. In a few cases, there were potential product cost reductions. Although it can be argued that the cost estimates are not that accurate, it is clear the costs are of a general order-of-magnitude and the figures appear rather consistent in relation to each other. Further, even if estimates are doubled, the impact on product costs would be less than 2 percent.

SECTION IV - METHODOLOGY

The methodology employed in the preparation of this report is summarized in Figure 4-1 and consists mainly of four phases of work: (1) Information Gathering; (2) Analysis of Information; (3) Cost Estimating; (4) Cost Comparison and Evaluation.

Information Gathering

The information gathering consisted of a review of EPA publications, reference books and materials from EPA headquarters building in Cincinnati; inspection of OSW files and in-house resources. During this phase it became increasingly apparent there was little, if anything, written about the traditionally land-disposed waste streams in the chemical and pesticides industries; many references and reports were found which related directly to the wastes under study for the explosives[1] industries. Thus, for all practical purposes, the industry report is the only source for waste stream information in the aforementioned industries.

The best information available on the physical and chemical properties of the various waste streams is insufficient for definitive engineering design of treatment processes. There are many reasons for the paucity of data. First, most chemical manufacturers do not monitor their wastes in terms of either quantities or components. When information is provided, proprietary rights agreements often prevent its disclosure. To circumvent this situation, the industry report deals with hypothetical plants, each plant using a single process as "typical," and the individual wastes generated therefrom were designated "typical," as well. Thus, the industry report contains their "best

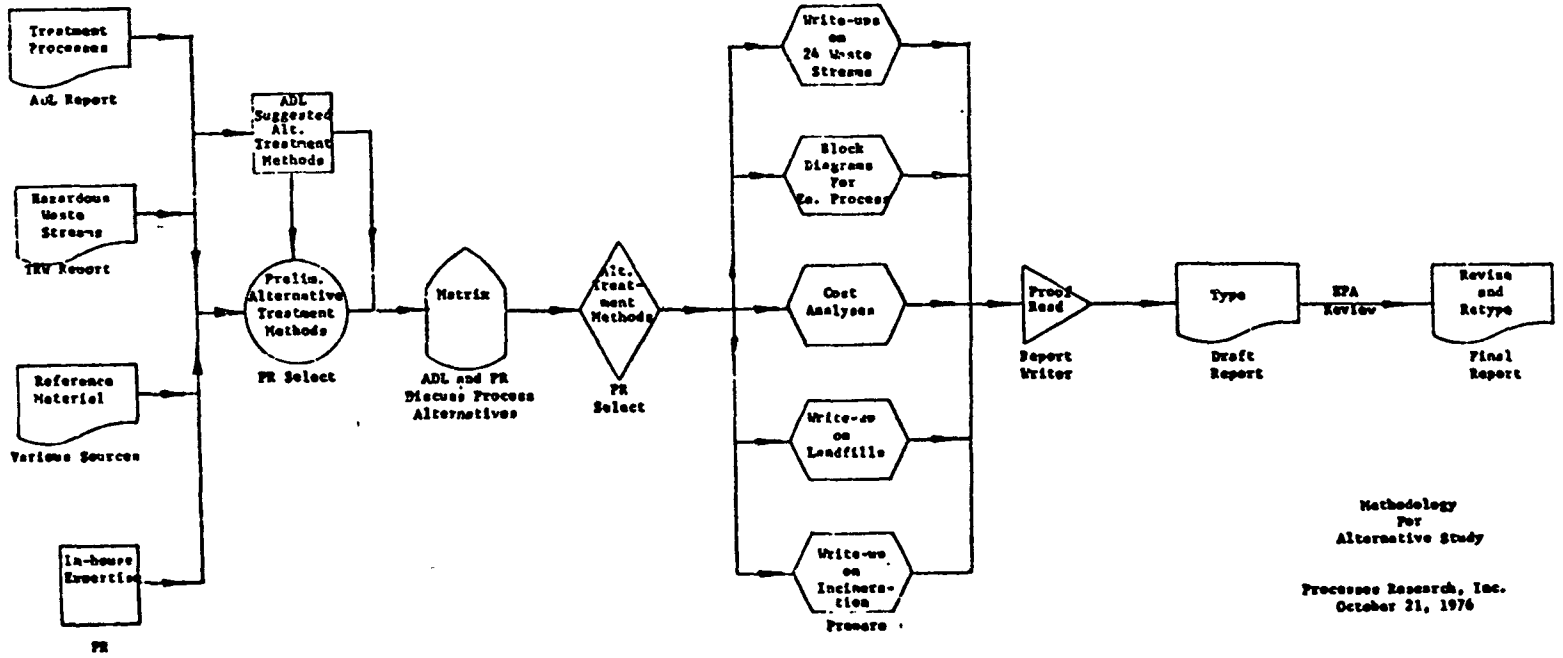
Treatment Processes
ADL Report
Hazardous Waste Streams
TRW Report
Reference Material
Various Sources
In-house Expertise
PR
ADL Suggested Alt. Treatment Methods
Prelim. Alternative Treatment Methods
PR Select
Matrix
ADL and PR Discuss Process Alternatives
Alt. Treat-ment Methods
PR Select
Write-ups on 24 Waste Streams
Block Diagrams For Ea. Process
Cost Analyses
Write-up on Landfills
Write-up on Incinera-tion
Preparer
Proof Read
Report Writer
Type
Draft Report
EPA Review
Revise and Retype
Final Report
Methodology For Alternative Study
Processes Research, Inc.
October 21, 1976

FIGURE NO. 4-1

estimate" of composition and quantities of the hazardous waste streams. In some instances, the chemical composition could not be identified, i.e., heavy ends from nitrobenzene column were described as "unknown nitro substituted aromatic compounds."

No physical property data were available for any of the waste streams. Furthermore, waste stream samples were not available for visible or laboratory study and manufacturers were not contacted since this was outside the framework of this study. To alleviate these negative factors and still characterize the wastes, experienced process chemical engineers were assigned who could make intelligent assumptions and overcome the process data deficiencies.

Analysis of Information

The next step was to review the 44 unit process alternatives in the Treatment Study Report[2] and determine how each might be applied to treatment of a specific hazardous waste stream. With EPA concurrence, eleven unit processes (categories I and II) were eliminated, because many years of additional research and development work would be needed before the treatment step could be considered a practical alternative.

Together with the Treatment Study Contractor, the waste stream characteristics were evaluated[3] and potential alternative processes were developed for each. Further consultation with the Contractor resulted in a better understanding of the physical, chemical and biological treatment processes covered in the Treatment Study. After a thorough analysis, the waste stream matrix shown in Table 4-2 was generated to indicate the alternatives selected for treatment. The numbers in the matrix designate the unit process sequence.

TABLE 4 - 2

WASTE STREAM MATRIX

UNIT TREATMENT PROCESS	NO.	1	2	3	4	5	6	7	8	9	10	11	12
	WASTE STREAM	Heavy Ends Perchloroethylene Mfr.	Heavy Ends Nitrobenzene Mfr.	Solid Tails Chloromethane	Solvent Mfr. Heavy Ends	Epichlorohydrin Mfr. Centrifuge Sludge	T.D.I. Mfr. Heavy Ends	V.C.M. Mfr. Heavy Ends	Methyl Methacrylate Monomer Mfr.	Heavy Ends Acrylonitrile Mfr.	Still Bottoms Maleic Anhydride Mfr.	Lead Sludge Lead Alkyls Mfr.	Heavies Ethanolamines Mfr.	Still Bottoms Furfural Mfr.
AIR STRIPPING														
CARBON ADSORPTION														
RESIN ADSORPTION														
CENTRIFUGATION												1		
DISTILLATION		1,2		1,3,5	3	2	1					2,2*		
EVAPORATION					2									
FILTRATION											1,3			
FLOCCULATION														
FLOTATION														
ION EXCHANGE														
REVERSE OSMOSIS														
SEDIMENTATION			1										1*	1
SOLVENT EXTRACTION					1									
STEAM STRIPPING														
ULTRAFILTRATION														
INCINERATION, CALCINATION, AND SINTERING										4				
CATALYSIS			3											
CHLORINOLYSIS				2										
ELECTROLYSIS														
HYDROLYSIS			2			1								2
NEUTRALIZATION				4		3								
OXIDATION														
OZONATION														
PRECIPITATION														
REDUCTION							2,3			2				
ACTIVATED SLUDGE														
AERATED LAGOON						4								
ANAEROBIC DIGESTION														
COMPOSTING														3
TRICKLING FILTER														
WASTE STABILIZATION PND														
CRUSHING AND GRINDING														

*TRAIN 2

TABLE 4 - 2
CONTINUED

UNIT TREATMENT PROCESS	WASTE STREAM NO.	Filter Solids 13	Furfural Mfr. 14	Spent Catalyst 15	Fluorocarbon Mfr. 16	Still Bottoms 17	Chlorotoluene Mfr. 18	Distillation Residues 19	Chlorobenzene Mfr. 20	Scrubbing Sol. 21	Cyanuric Chloride Mfr. 22	Spent Carbon 23	Trifluralin Mfr. 24	Filter Cake	Malathion Mfr.	Liquid Wastes	Malathion Mfr.	Sulfur Sludge	Parathion Mfr.	Spent Carbon	Explosives Mfr.	Red Water	Explosives Mfr.	Waste Explosives	Explosives Mfr.
AIR STRIPPING																									
CARBON ADSORPTION																									
RESIN ADSORPTION																	2								
CENTRIFUGATION													3												
DISTILLATION		1	2,1*										4				3				2				
EVAPORATION											4													4*	
FILTRATION																			3					3*	
FLOCCULATION																									
FLOTATION																									
ION EXCHANGE																									
REVERSE OSMOSIS																									
SEDIMENTATION															3		1		1						
SOLVENT EXTRACTION													2								1				
STEAM STRIPPING															2										
ULTRAFILTRATION																			2						
INCINERATION, CALCINATION, AND SINTERING																							1		
																					3,1*			5*	
CATALYSIS																									
CHLORINOLYSIS																									
ELECTROLYSIS																									
HYDROLYSIS		2													1										
NEUTRALIZATION											1														
OXIDATION																								2	
OZONATION											2														
PRECIPITATION																									
REDUCTION			1																					2*	
ACTIVATED SLUDGE																								3	
AERATED LAGOON											3				5										
ANAEROBIC DIGESTION																								4	
COMPOSTING		3											5		4				4						
TRICKLING FILTER																									
WASTE STABILIZATION PND																									
CRUSHING AND GRINDING													1											1,1*	

*TRAIN 2

While each alternative treatment process was under consideration, the benefits and environmental advantages and disadvantages for each process were analyzed. The alternative method finally selected was the one which appeared to have the most potential from a cost or environmental standpoint. However, where two alternative treatment methods appeared to have equal potential, each was evaluated and designated Train 1 and Train 2, respectively.

Cost Estimating

In the third phase, capital cost estimates were prepared for each alternative treatment facility. Utilizing EPA unit cost guidelines[4], operational costs (labor, utilities, maintenance) were developed allowing proper credits for any chemicals or energy recovered. EPA cost estimating manuals[5] were used whenever possible for standardization purposes and other cost references were employed, as needed. Similar procedures were followed for incineration and landfill.

Cost Estimating Procedure

Process economics for the alternative treatment processes were developed as follows:

1. Total waste stream amounts (metric tons per year) were obtained from the TRW System report "Assessment of Hazardous Waste Practices in the Organic Chemicals, Pesticides, and Explosives Industries," EPA Contract 68-01-2919.

2. Processing equipment was sized on the basis of the waste stream amounts, and good engineering practices, for the individual pieces of equipment.

3. Installed costs for the individual pieces of process equipment and for the incinerators were determined through use of "Capital and Operating

Costs of Pollution Control Equipment Modules, Volumes I and II," EPA-R5-73-023a and 023b. Costs from these publications were updated from 1972 to fourth quarter 1976 using a factor of 1.46. The 1.46 escalation factor is derived from a combination of the Marshall and Stevens index and the Engineering News Record index as related in Volume I of EPA-R5-73-023.

4. Annual fixed and operating costs were determined utilizing the following economic criteria as directed by the Environmental Protection Agency:

a.	Land Cost	$12,350 per hectare (Not included in alternatives study)
b.	Taxes and Insurance	4 percent of depreciable capital
c.	Maintenance	4 percent of depreciable capital
d.	Direct Labor	$9.00 per hour
e.	Supervision and Administrative	50 percent of direct labor
f.	Utility Water	$.0792 per 1,000 liters
g.	Boiler Feedwater	$.127 per 1,000 liters
h.	Instrument Air	$.71 per M^3
i.	Nitrogen	October 4, 1976 Chemical Marketing Reporter
j.	Steam	$8.80 per 1,000 kg, or $1.00 per 10^6 calories
k.	Fuel	$.50 per 10^6 calories
l.	Electric Power	$.03 per kWh
m.	Contingency	20 percent of capital
n.	Interest Rate on Capital	10 percent
o.	Salvage Value	0

p.	Depreciation	10 years, straight line at 10 percent
q.	Royalties and Fees	0
r.	Raw Materials	Prices from October 4, 1976, Chemical Marketing Reporter
s.	Recovered Products	70% of prices given in October 4, 1976, Chemical Marketing Reporter or personal communication with Manufacturer
t.	Engineering	10 percent of capital

Use of the worksheets "Estimation of Annual Process Cost," pages 169-172 of EPA-R5-73-023a aided in the compilation of annual fixed charges, direct operating cost, and total annual cost.

5. Knowledge of the total annual cost coupled with plant production rate and total waste quantity allowed determination of the impact on product and waste treatment costs, respectively. Similar costs were generated for incineration and landfill. Details can be found in their respective sections. It should be noted, as described above, that the lack of specific information as to the physical and chemical nature of the wastes, generated certain problems in formulating the economics. Assumptions were made as to the feasibility and degree of separation with relation to various process steps. Based on these assumptions, equipment parameters were defined and estimated. It must be emphasized, under the foregoing conditions, further development and engineering work is required to more closely quantify and validate the economic parameters indicated in this report.

Cost Comparison and Evaluation

In the fourth phase the cost results for each of the alternative treatment processes were evaluated and compared with the calculated corresponding costs for incineration, sanitary and chemical landfills.

REFERENCES

1. TRW Systems Group, Assessment of Industrial Hazardous Waste Practices: Organic Chemicals, Pesticides and Explosives Industries, Environmental Protection Publication, Report SW-118c, 1976. Sections 2 and 7.

2. Arthur D. Little, Inc. Application of Physical, Chemical and Biological Treatment Techniques to Hazardous Waste Management, Cambridge 2V, Environmental Protection Contract 68-01-3554, 1976.

3. Personal Communication. J. Berkowitz, Arthur D. Little, Inc., to J. M. Genser, Processes Research, Inc. 19 pages. October 4, 1976.

4. Personal Communication. E. P. Crumpler, OSWMP, to J. M. Genser, Processes Research, Inc. October 4, 1976.

5. Icarus Corporation. Capital and Operating Costs of Pollution Control Equipment Modules. Silva Spring. 2V. Environmental Protection Publication EPA-RS-73-023a+b. 1973.

SECTION V - ALTERNATIVE TREATMENT PROCESSES

Heavy Ends From Purification Columns - Perchloroethylene Manufacture - Waste Stream No. 1

Waste Stream Description. The steps[1,2] for making perchloroethylene (PERC) Figure 5-1 from acetylene and chlorine are as follows:

1. Chlorination of acetylene to tetrachloroethane.
2. Dehydrochlorination of tetrachloroethane to trichloroethylene.
3. Purification of the trichloroethylene by distillation.
4. Chlorination of trichloroethylene to pentachloroethane.
5. Dehydrochlorination of pentachloroethane to tetrachloroethylene.
6. Purification of the tetrachloroethylene by distillation.

The heavy ends from the two purification columns (Steps 3 and 6 listed above) are combined, yielding a waste stream having an approximate composition as shown in Table 5-1. The waste stream is a two phase sludge.

In 1973, 320,000 metric tons of perchloroethylene were produced by eight major manufacturers. A typical plant[1] ranges in size from 32,000 to 45,000 metric tons per year. For this study an annual capacity of 39,000 metric tons, operating 300 days per year, was assumed.

Existing Treatment Methods. The most prevalent methods of disposal for the "heavy ends" waste stream are deep well injection and landfill. The constituents are bioaccumulative and are classified as potentially hazardous.[1]

Selected Alternative Treatment Process. An alternate treatment method for the heavy ends is distillation for the recovery of hexachlorobutadiene.

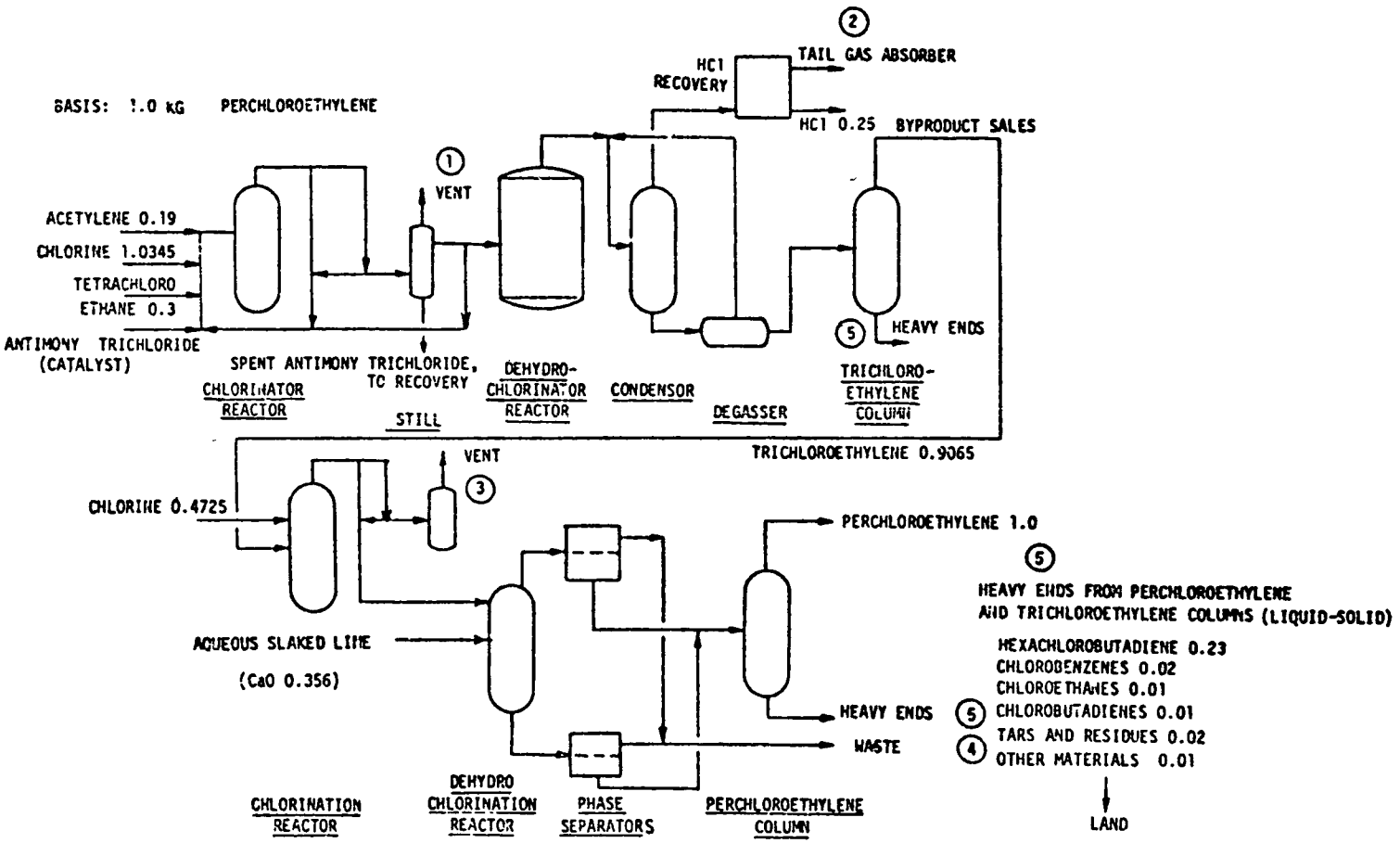

HEAVY ENDS FROM PURIFICATION COLUMNS, 5

WASTE STREAM NO. 1

FIGURE 5-1 PERCHLOROETHYLENE MANUFACTURE

TABLE NO. 5-1

APPROXIMATE COMPOSITION OF "HEAVY ENDS" WASTE STREAM [1,4,8]

Component	Kg/Kg of "PERC"	Per-cent	Boiling Point at 760 MM, C	Provisional Limits For Man in PPM	
				Air	Water
Hexachlorobutadiene	0.23	77	215	-	-
Chlorobenzenes	0.02	7	132-172	0.75	17.5
Chloroethanes	0.01	3	32-87	0.5-10	10-130
Chlorobutadiene	0.01	3	60	-	-
Tars	0.02	7	High	-	-
Others	0.01	3	High	-	-
Totals	0.30	100			

Two manufacturers, Ferro Corporation and Dynamit Nobel both market hexchlorobutadiene in 55 gallon drums. The following process is proposed for treating the "heavy ends" from the purification columns: (1) Provide a feed system consisting of a heated, agitated storage tank with a reflux condenser for blending the "heavy ends" into a more uniform feed stock; (2) Provide a stripping column for separating out the "lights" and recycle the "lights" to the chlorinator of trichloroethylene, Step 4 of the "PERC" process; (3) Provide a fractionating column taking hexachlorobutadiene off overhead and the "tars" and "others" as bottoms. The bottoms of "tars" and "others" would be sent to chemical land disposal.

The distillation system would be automated and operate continuously. There are three possibilities for disposing of the hexachlorobutadiene: (1) Sell it as a liquid phase chlorination medium. Chlorine is very soluble in hexachlorobutadiene and under ordinary conditions does not react with hexachlorobutadiene; (2) Initiate research work on selectively converting hexachlorobutadiene to "PERC," namely this reaction: $C_4Cl_6 + Cl_2 \longrightarrow 2C_2Cl_4$; (3) Use the hexachlorobutadiene as a feed stock for making carbon tetrachloride by thermochlorination[5,9] (chlorinolysis).

The ADL rating[5] for the status of this proposed treatment is III/IV. Vapor and liquid composition data on the stripping of the "lights" and on fractionating the hexachlorobutadiene is probably available from Ferro Corporation[10] or Dynamit Nobel. Development work will be required on the marketability of hexachlorobutadiene.

See Figure No. 5-2 for block flow diagram of the treatment method.

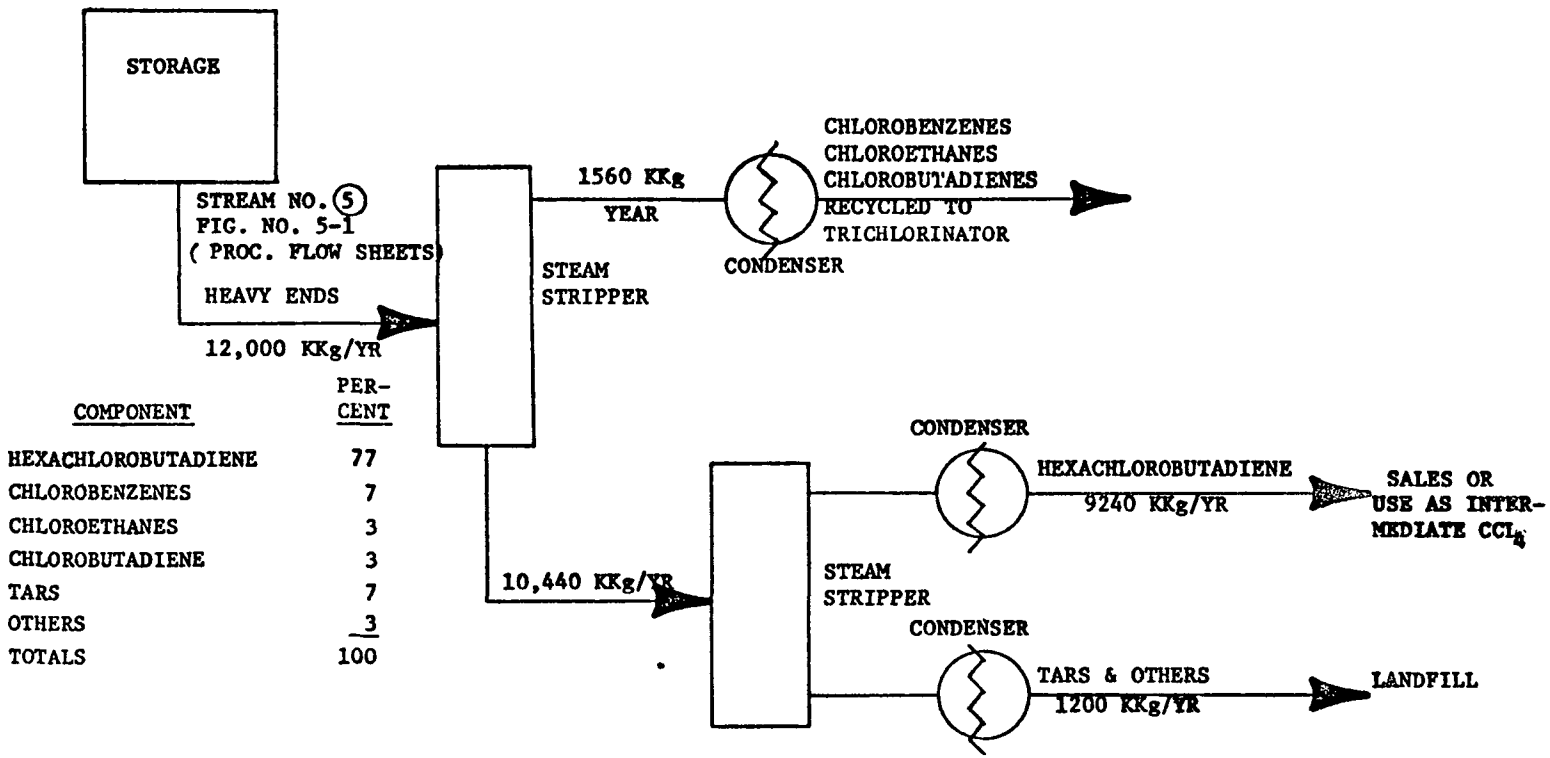

COMPONENT	PER-CENT
HEXACHLOROBUTADIENE	77
CHLOROBENZENES	7
CHLOROETHANES	3
CHLOROBUTADIENE	3
TARS	7
OTHERS	3
TOTALS	100

HEAVY ENDS FROM PURIFICATION COLUMNS - PERCHLOROETHYLENE MANUFACTURE

WASTE STREAM NO. 1

FIGURE NO. 5-2

Benefits and Environmental Advantages and Disadvantages. The assumed plant size of 39,000 metric tons of "PERC" per year will yield about 12,000 metric tons per year of "heavy ends." By applying the distillation treatment method, 13 percent of the wastes would be recycled and 10 percent or about 1,200 metric tons per year, would be sent to chemical land disposal. The remaining 9,000 metric tons, or 77 percent, would be purified hexachlorobutadiene on which further development work is required, but which has a potential market value of about $4,800,000 per year.[3]

The advantages are: (1) Recover of resource, hexachlorobutadiene; (2) Reasonable energy input; (3) 90 percent reduction in the volume of wastes; (4) Detoxification of wastes. The disadvantages are: the capital costs of the treatment system, which are about $735,000.

Cost Analysis. The cost analysis is based[6] on a plant producing 39,000 KKg per year of perchloroethylene operating 24 hours per day and 300 days per year. A summary of capital cost, annual operating cost, and the cost impact for waste treatment follows.

WASTE STREAM NO. 1

1. ESTIMATED INSTALLED CAPITAL COST

BASIS: 40 KKg/Day of Heavy Ends

Equipment Item	Estimated Cost
A. Feed System	$ 140,000
Feed Tank, 30,000 ℓ, w/coil and agitator Associated Heat Exchangers Feed Pump, 40 ℓ/min	
B. Stripping System	$ 143,000
Stripping Column, 50 cm. dia X 25 Plate Associated Heat Exchangers Hold Tank, 4000 ℓ Associated Pumps, 40 ℓ/min each	
C. Fractionating System	$ 280,000
Fractionating Column, 76 cm dia x 12.2 M Associated Heat Exchangers, Associated Pumps C_4Cl_6 Tank, 23,000 ℓ	
Subtotal	$ 563,000
Engineering @ 10%	56,300
Contingency including freight @ 20%	112,600
Total	$ 731,900

2. ANNUAL FIXED CHARGES

Depreciation $731,900 @ 10%/yr		$ 73,200
Interest $731,900 @ 10%/yr		73,200
Insurance and Taxes $731,900 @ 4%/yr		29,300
Total Annual Fixed Charges		175,700

3. DIRECT OPERATING COST

Raw Material		
Utilities	$ 41,600	
Maintenance 0.04 x 731,900	29,300	
Direct Labor $5,422 MH x 9.0 x 1.5	73,200	
Annual Direct Operating Cost		$ 144,100
Annual Disposal Cost		3,600
Total Annual Cost		$ 323,400
Recovered Materials C_4Cl_6 - 9,000 KKg @ $770/KKg Market Value of $770 x .7 = $540/KKg x 9,000		$-4,860,000
Net Total Annual Cost		$-4,536,600

4. COST PER KKg PRODUCT $ 4,536,600 ÷ 39,000 KKg $ -116.

5. COST PER KKg WASTE $ 4,536,600 ÷ 12,000 KKg $ -378.

6. IMPACT ON PRODUCT COST

(Market value of 1 KKg product = $390)

Cost/KKg ÷ Market Value/KKg = $-116. ÷ $390 -29.8%

REFERENCES

1. TRW Systems Group. Assessment of Industrial Hazardous Waste Practices: Organic Chemicals, Pesticides and Explosives Industries. Redondo Beach, Environmental Protection Publication, Report SW-118C, 1976.

2. Mark, H. F., J. J. McKetta, D. F. Othmer, and A. Stamden. Kirk-Othmer Encyclopedia of Chemical Technology. 2nd Ed. New York. Interscience Publishers, John Wiley and Sons, 1965.

3. Chemical Market Reporter, September 20, 1976, Volume 210, Number 12. New York. Schnell Publishing Company, Inc.

4. Ottinger, R. S., J. L. Blumenthal, D. F. Dal Porto, G. I. Gruber, M. J. Santy, and C. C. Smith. Recommended Methods of Reduction, Neutralization, Recovery, or Disposal of Hazardous Waste. Volume II, Toxicologic Summary. Redondo Beach, Environmental Protection Publication 224-581, 1973.

5. Arthur D. Little, Inc. Application of Physical, Chemical and Biological Treatment Techniques to Hazardous Waste Management. Cambridge. 2V. Environmental Protection Contract 68-01-3554, 1976.

6. Icarus Corporation. Capital and Operating Costs of Pollution Control Equipment Modules. Silver Spring. 2V. Environmental Protection Publication EPA-R5-73-023a, 1973.

7. Personal Communication. E. P. Crumpler, Environmental Protection Agency, to J. M. Genser, Processes Research, Inch., October 14, 1976.

8. Weast, R. C., S. M. Selby, and C. D. Hodgman. Handbook of Chemistry and Physics. 45th Ed. Cleveland. The Chemical Rubber Co., 1964.

9. Sconce, J. S., Ed. Chlorine, Its Manufacture, Properties and Uses. New York, Reinhold Publishing Corporation, 1962.

10. Personal Communication. S. Allen, Ferro Corporation, to S. P. Klosky III, Processes Research, Inc., October 29, 1976.

Heavy Ends from Purification Column

Nitrobenzene Manufacture - Waste Stream No. 2

Waste Stream Description. The steps[1,2,11] involved in the production of nitrobenzene, classified as a "cyclic intermediate," from benzene (Figure 5-3) are as follows:

(1) Benzene is introduced into a jacketed, agitated, and cooling coil equipped steel reaction vessel; (2) Addition of mixed acid, composed of 50 to 60 percent sulfuric acid, 30 to 40 percent nitric acid, and about 8 percent water; (3) Control of temperature, ranging from 45 to 95C depending on process used, to allow reaction to proceed; (4) Separation of reaction mixture into an upper (nitrobenzene) phase and a lower (spent acid) phase in a liquid-liquid separator; (5) Washing of nitrobenzene phase with dilute sodium carbonate solution in a liquid-liquid contacting vessel; (6) Purification of nitrobenzene by distillation. This purification results in the production of column bottoms or "heavy ends."

Exact composition of this waste stream is unknown, but it is considered to consist of nitro substituted aromatic compounds and (possibly) some residual inorganic salts. It is discharged as a nonaqueous liquid.

In 1973, 140,000 metric tons of nitrobenzene were produced by seven major manufacturers. Typical plant capacities range from 4500 metric tons to 38,000 metric tons per year. For this study, an annual capacity of 20,000 metric tons, operating 300 days per year, was assumed. On this basis, the waste quantity is estimated at 50 metric tons per year per typical plant.

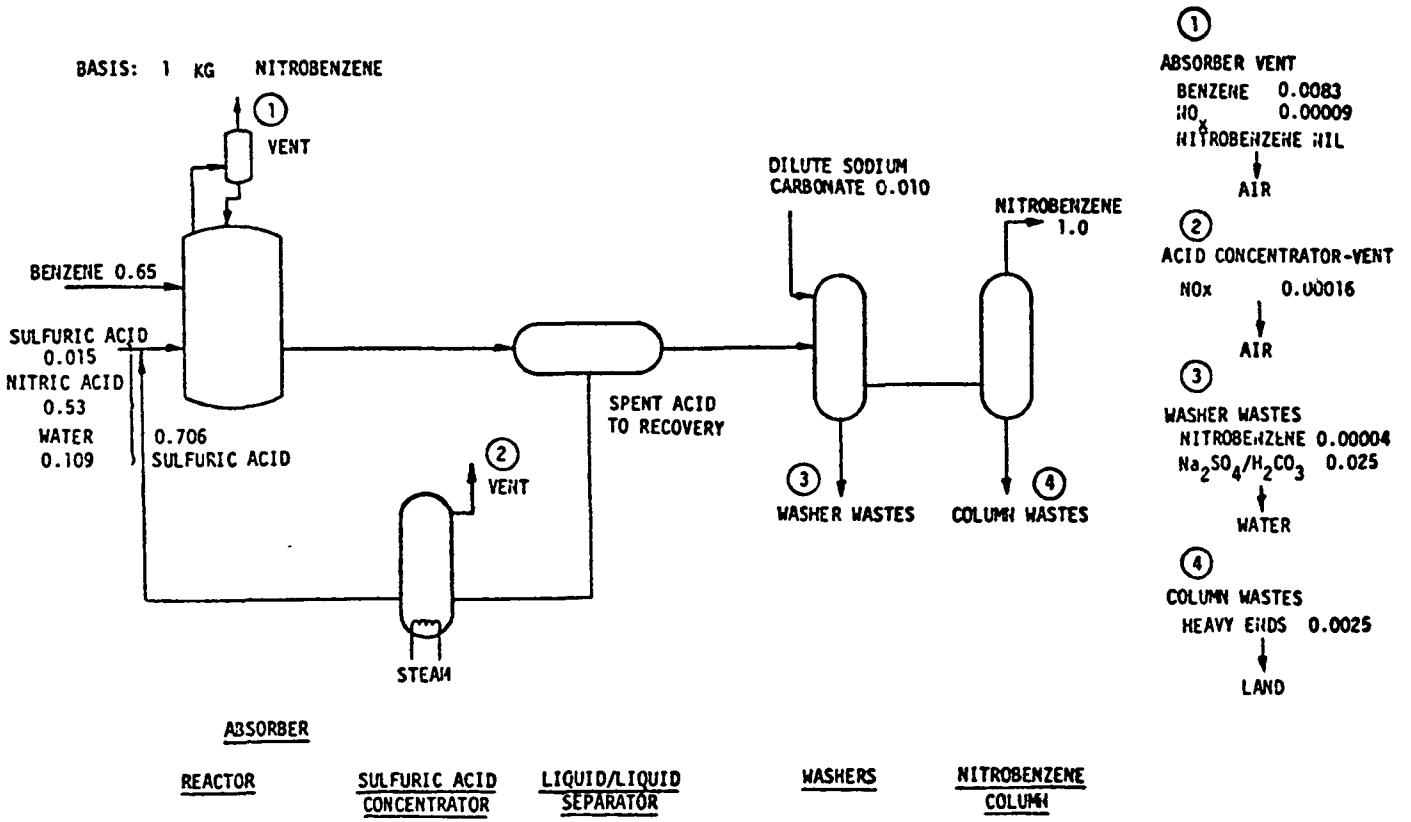

1
ABSORBER VENT
BENZENE 0.0083
NO_x 0.00009
NITROBENZENE NIL
AIR

2
ACID CONCENTRATOR-VENT
NOx 0.00016
AIR

3
WASHER WASTES
NITROBENZENE 0.00004
Na_2SO_4/H_2CO_3 0.025
WATER

4
COLUMN WASTES
HEAVY ENDS 0.0025
LAND

HEAVY ENDS FROM PURIFICATION COLUMN, 4

WASTE STREAM NO. 2

FIGURE 5-3 NITROBENZENE MANUFACTURE

Existing Treatment Methods.[1] The most prevalent method of disposal for the "heavy ends" waste stream is to drum the waste and send it to landfill. The waste is classified potentially hazardous due to known toxic physiological affects of nitro substituted aromatics.

Steel drums are used as safeguards in disposal of approximately 30 percent of total wastes sent to land disposal. Plants now producing nitrobenzene do not use plastic or concrete encapsulation or leachate treatment as safeguards for the waste disposal.

Selected Alternative Treatment Process.[2,3,4,5,8] The steps involved in the proposed treatment of wastes generated by production of nitrobenzene are as follows: (1) Steam distillation; (2) Hydrolysis (Alkali); (3) Catalytic reduction.

The last step (catalytic reduction) is included only as a possible additional treatment step to convert the material produced by Step 2 to an alternate marketable product; however, it would not be economically justified if the material produced in Step 2 is already of satisfactory salable quality. Detailed description of the steps involved is outlined below.

1. Provide a feed system consisting of a heated, agitated holding tank and pump.

2. Steam distill[5,8] the heavy ends to strip off any nitrobenzene present. Recycle this light component to the nitrobenzene production stream. Column bottoms are presumed[2] to be primarily m-dinitrobenzene, with some o-isomer and a trace of the p-isomer. Trinitrobenzene is presumed not to be formed in nitrobenzene manufacture, due to the extreme difficulty of its formation[3] by direct nitration of benzene.

3. Separate the m-dinitrobenzene from its isomers by treatment[2] with a 5 to 10 percent caustic solution at 90 to 100C. The ortho and para isomers are converted to the corresponding nitrophenols and are removed as soluble alkali salts with the alkaline solution. These can be disposed of in lined drums and buried in a secured landfill.

4. With isolation of m-dinitrobenzene, this material can be sold, or it can be reduced[4,5] in a liquid phase catalytic reactor using metallic iron or tin with dilute hydrochloric acid to produce m-nitroaniline or a m-phenylenediamine. The aqueous solution of m-phenylenediamine can be used directly for dye preparation or can be further purified by distillation. It is evident, however, from a preliminary cost analysis that the reduction to the phenylenediamine is not economically justified due to the additional reactants and equipment required.

A block flow diagram, Figure No. 5-4, follows which is representative of the process.

Benefits and Environmental Advantages and Disadvantages. By the steam distillation and caustic treatment method for recovery of nitrobenzene and m-dinitrobenzene from the waste stream, about 10 percent of the waste could be recycled, and an additional 80 percent may be converted to salable product.

The apparent disadvantage is the capital costs of the treatment system for the small amount of waste involved, making the alternative of incineration

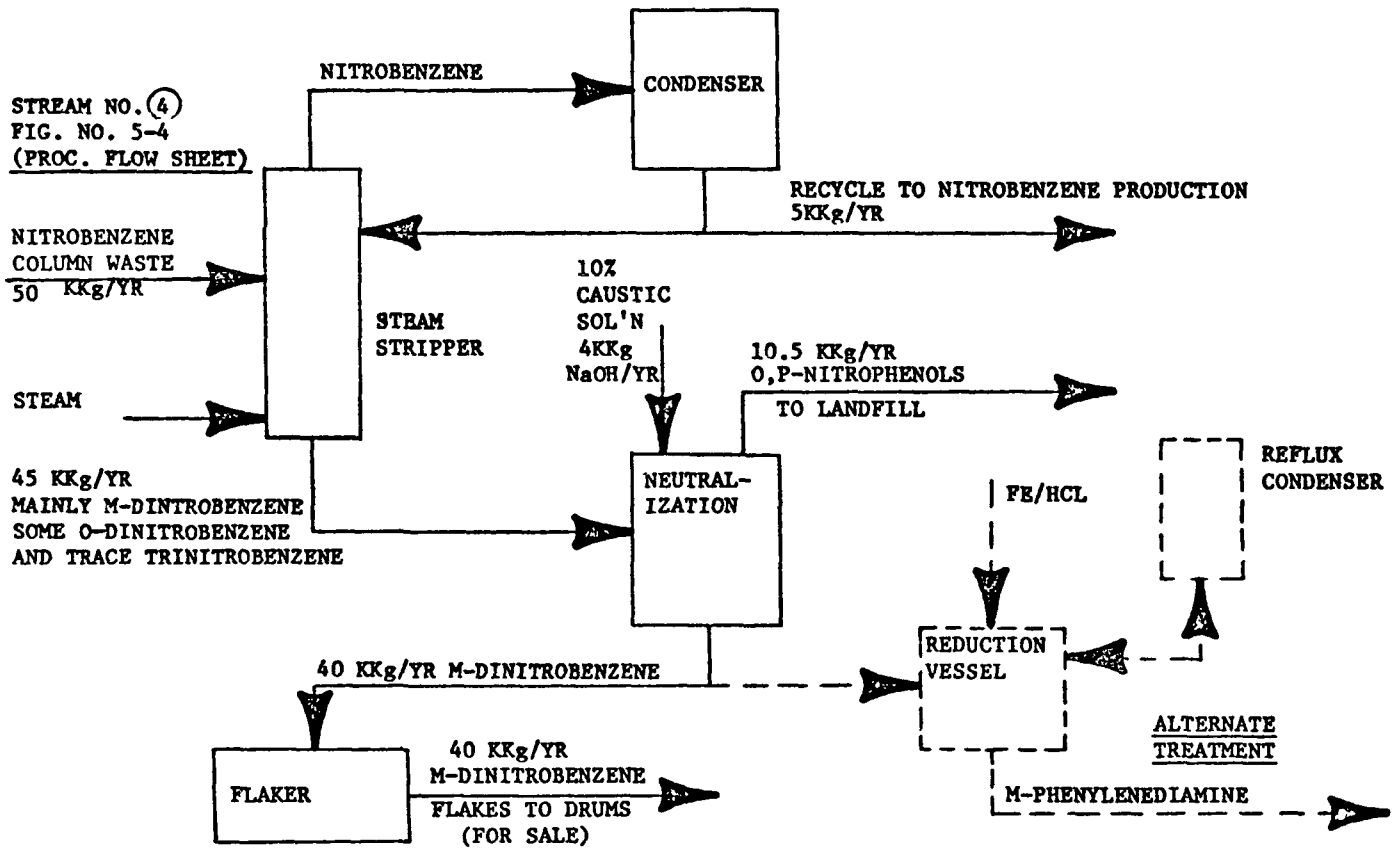

HEAVY ENDS FROM PURIFICATION COLUMN - NITROBENZENE MANUFACTURE

WASTE STREAM NO. 2

FIGURE NO. 5-4

the more reasonable approach to disposal. Advantages include reduction of the waste material, partial recovery of cost by production of salable material, and reasonable energy input.

Cost Analysis. The cost analysis is based[1] on a plant producing 20,000 KKg per year of nitrobenzene operating 24 hours per day and 300 days per year. A summary of capital cost, annual operating cost, and the cost impact for waste treatment follows.

WASTE STREAM NO. 2

1. ESTIMATED INSTALLED CAPITAL COST

BASIS: 0.167 KKg/DAY OF NITROBENZENE COLUMN WASTE

Equipment Item	Estimated Cost
Hold Tank, 760 ℓ	$ 38,750
Hold Tank Pump, 8 ℓ/m	3,200
Steam Stripper, 50 cm dia x 4.5 mH	44,100
Stripper Condenser, 160 ℓ/m	7,400
Decanter, 560 liters	7,300
Caustic Treat Tank, 760 liters	38,750
Treat Tank Pump, 40 ℓ/m	3,360
Decanter/Condenser Pump, 20 ℓ/m	3,210
Stripper Btms Pump, 40 ℓ/m	3,360
Treat Tank Waste Pump 40 ℓ/m	3,360
Flaker	8,760

Subtotal	$161,600
Engineering at 10 percent	16,200
Contingency including freight at 20 percent	32,400
Total Estimated Installed Capital Cost	$210,200

Waste Stream No. 2

2. ANNUAL FIXED CHARGES

Depreciation $210,200 @ 10%/year		$ 21,000
Interest $210,200 @ 10%/year		21,000
Insurance and Taxes $210,200 @ 4%/year		8,400
Total Annual Fixed Charges		$ 50,400

3. DIRECT OPERATING COST

Raw Material 50% NaOH 4 KKg @ $160	$ 640	
Utilities	1,800	
Maintenance 0.04 x 210,200	8,400	
Direct Labor 4,200 MH x $9.00 x 1.5	56,700	
Annual Direct Operating Cost		$ 67,540
Annual Disposal Cost		2,500
Total Annual Cost		$120,440
Recovered Materials: M-Dinitrobenzene 40 KKg @ $790 x 0.7 = $22,120 Nitrobenzene 5 KKg @ $510 x 0.7 = 1,780		-23,900
Net Total Annual Cost		$ 96,540

4. COST PER KKg PRODUCT $96,540 ÷ 20,000 = $ 4.83

5. COST PER KKg WASTE $96,540 ÷ 50 = $ 1,930

6. IMPACT ON PRODUCT COST

(Market value of 1 KKg product = $510)

Cost/KKg ÷ Market Value/KKg = $4.83 ÷ $510 0.95%

REFERENCES

1. TRW Systems Group. Assessment of Industrial Hazardous Waste Practices: Organic Chemicals, Pesticides, and Explosives Industries. U.S. Environmental Protection Agency Publication SW-118C, 1976.

2. Groggins, P. H. Unit Processes in Organic Synthesis. New York, McGraw - Hill, Inc., 1952. 937p.

3. Fieser, L. F. and M. Fieser. Textbook of Organic Chemistry. Boston, D. C. Heath and Company, 1950. 741p.

4. Kirk - Othmer Encyclopedia of Chemical Technology, 2 ed., V. 15. New York, Interscience Publishers, 1967.

5. Personal Communication. Arthur D. Little, Inc., Associates, to J. M. Genser, Processes Research, Inc. October 19, 1976.

6. National Technical Information Service, U. S. Department of Commerce; Recommended Methods of Reduction, Neutralization, Recovery, or Disposal of Hazardous Waste, V. II, Toxicologic Summary. TRW Systems Group, Environmental Proection Publication PB-224 581, August 1973.

7. Ibid, V. XI, Industrial and Municipal Disposal Candidate Waste Stream Profile Reports, Organic Compounds (continued). TRW Systems Group, Environmental Protection Publication PB-224 590, August 1973.

8. Arthur D. Little, Inc. Application of Physical, Chemical, and Biological Treatment Techniques to Hazardous Waste Management. Cambridge, 2 V. Environmental Protection Contract 68-01-3554, 1976.

9. Icarus Corporation. Capital and Operating Costs of Pollution Control Equipment Modules. Silver Spring, Maryland. 2 V. Environmental Protection Publication EPA-RS-73-023b, 1973.

10. Chemical Market Reporter, September 20, 1976, Vol. 210, No. 12. New York, Schnell Publishing Company, Inc.

11. Personal Communication. E. P. Crumpler, United States Environmental Protection Agency, to J. M. Genser, Processes Research, Inc., October 14, 1976.

Solid Tails From Solvent Recovery System - Chloromethane Solvent Manufacture - Waste Stream No. 3

Waste Stream Description. In 1973, over 50 percent of the chloromethanes, or nearly 600,000 metric tons, were produced by these two similar processes:[1,9]

1. Direct thermal chlorination of methane.
2. Chlorinolysis of light hydrocarbons.

The processes consist of 2 basic steps: (1) high temperature chlorination with quench cooling; (2) separation of the various chloromethanes by distillation. The last distillation column yields pure carbon tetrachloride as the overhead. See Figure 5-5. A method for treating the bottoms of this column is the subject of this study.

The waste stream is mainly the products of side reactions,[9] namely:

$$\text{Hydrocarbon} + Cl_2 \longrightarrow C_6Cl_6, \text{ Hexachlorobenzene}$$

$$\text{Hydrocarbon} + Cl_2 \longrightarrow C_4Cl_6, \text{ Hexachlorobutadiene}$$

$$\text{Hydrocarbon} + Cl_2 \longrightarrow C, \text{ Carbon}$$

and is equal to 0.006 Kg of waste per Kg of product.[1] The composition of the waste stream is approximately as follows:

Hexachlorobenzene	45 Percent
Hexachlorobutadiene	45 Percent
Tars, others	10 Percent

For a typical plant producing 50,000 tons per year of chloromethanes, the

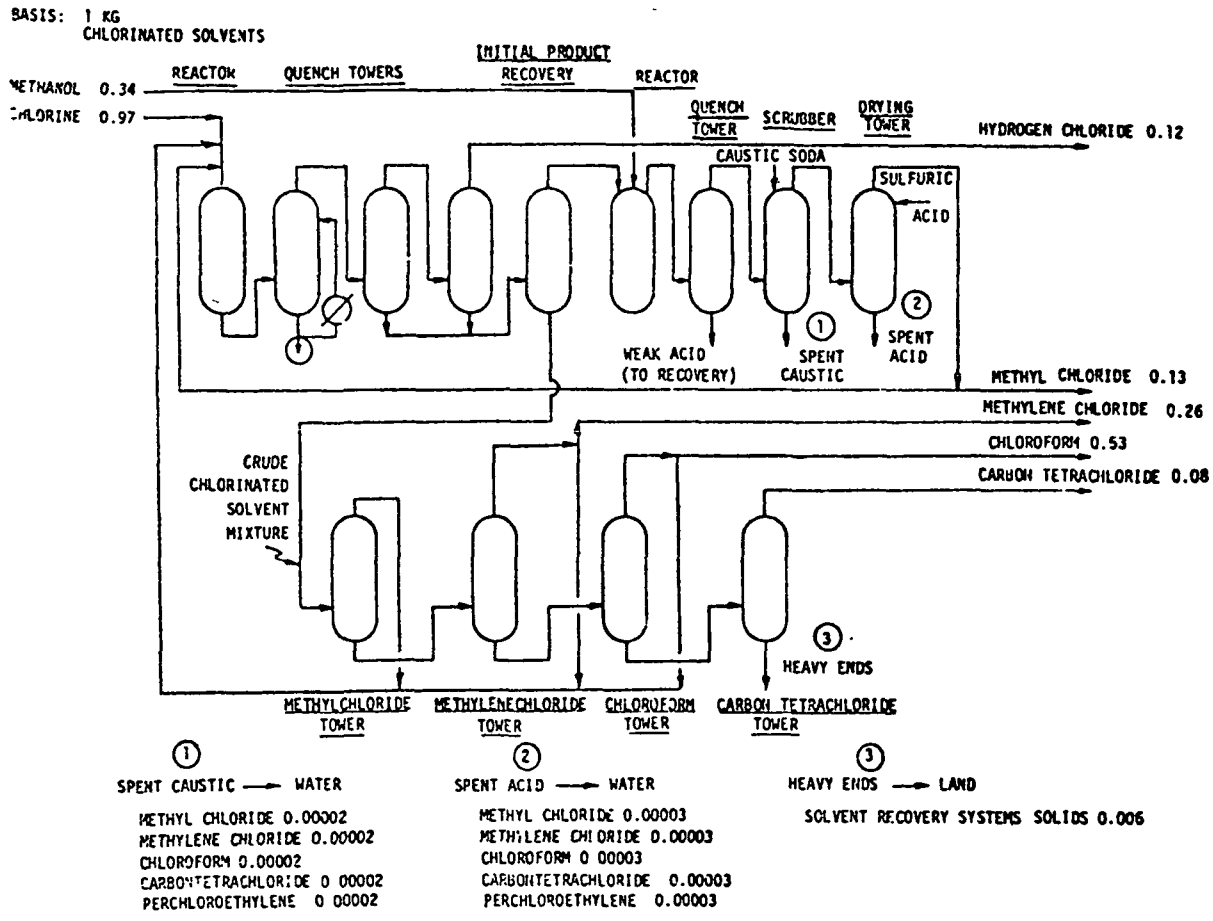

SOLID TAILS FROM SOLVENT RECOVERY SYSTEM, ③

WASTE STREAM NO. 3

FIGURE 5-5 CHLORINATED SOLVENTS MANUFACTURE

waste stream amounts to 300 metric tons per year. There seems to be no provisional limits[4] of hexachlorobenzene and hexachlorobutadiene. However, the "solid tails" stream from chloromethanes manufacture is considered to be a potentially hazardous waste.[1]

Existing Treatment Methods. The present method for disposing of the "solid tails", the bottoms from carbon tetrachloride column, is off-site landfill.[1,10]

Selected Alternative Treatment Process. In the initial phase of this study, these alternative treatment processes were considered:

Process	Remarks
Calcination	High energy input required
Catalysis	Additional research needed
Chlorinolysis	1.5 percent production increase
Hydrogenation	Costly
Hydrolysis	Wastes too stable to react
Oxidation	Wastes too stable to react
Steam distillation	Mostly high boilers not strippable
Waste stabilization	Present method

Since chlorinolysis treatment of the "solid tails" will increase the yield of chloromethanes (the products being manufactured) by about 1.5 percent and reduce the amount of wastes by about 80 percent, this was the alternative treatment process selected for study. The other 7 processes were either too expensive, high energy consumers or did not reduce the volume of wastes.

The proposed 6-step chlorinolysis process,[5] Figure 5-6, is as follows: (1) Remove the carbons, which are about 10 percent of the wastes, by distilling off the C_4Cl_6 and the C_6Cl_6; (2) The two distilled "hexacloros" would then be mixed with a large excess of preheated chlorine and reacted in a nickel tube at 620C and 240 atmospheres to produce carbon tetrachloride. The reaction products would be quenched to below 500C with cool carbon tetrachloride to prevent this side reaction:[9,2]

$$CCl_4 \xrightarrow[\text{Heat}]{} C + Cl_2$$

The reaction products would be further cooled to 420C by depressurizing to 21 atmospheres; (3) Distill off the high boilers and recycle the unreacted "hexachloros" (C_6Cl_6, C_4Cl_6) to the reactor; (4) Separate the unreacted Cl_2 from the carbon tetrachloride in a crude CCl_4 distillation column which operates at about 20 atmospheres. (5) The overhead, which is chlorine contaminated with phosgene, is sent to the Cl_2 column, for the removal of $COCl_2$ as bottoms.[8] The phosgene is neutralized with sodium hydroxide and sent to waste. The chlorine is taken off overhead, mixed with fresh Cl_2 and recycled to the reactor; (6) The crude CCl_4, the bottoms of step 4, is depressurized to atmospheric pressure and fractionated to produce pure CCl_4. The overheads mainly HCl, Cl_2 and $COCl_2$, are scrubbed with caustic and sent to chemical land disposal.

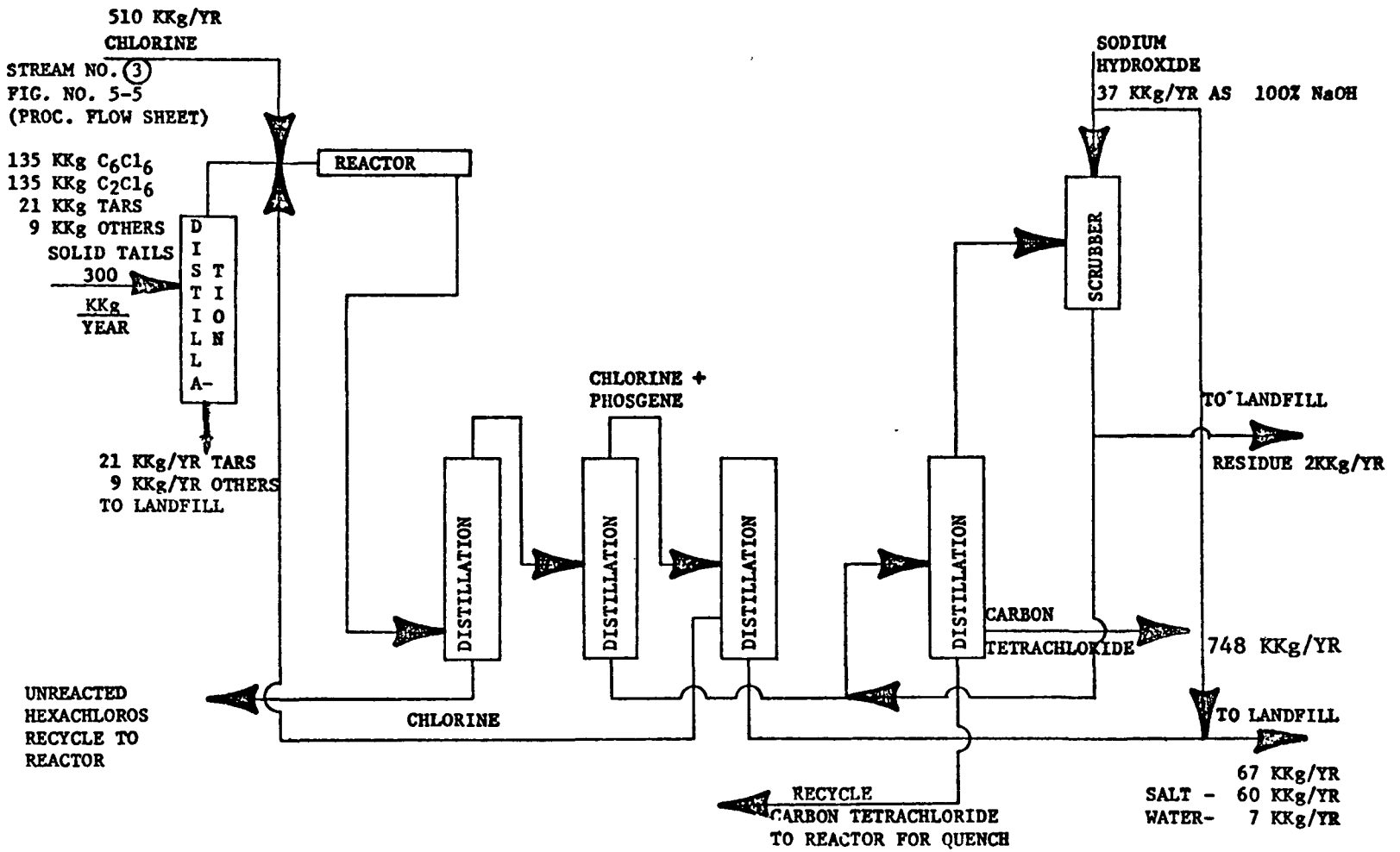

SOLID TAILS FROM SOLVENT RECOVERY - CHLOROMETHANE MANUFACTURE

WASTE STREAM NO. 3

FIGURE NO. 5-6

Benefits and Environmental Advantages and Disadvantages. The chlorinolysis treatment of the "solid tails" produces 750 metric tons per year of pure carbon tetrachloride which can be sold with the main products and reduces the hazardous wastes from 300 metric tons per year to about 65 tons of carbon tars and salts.

Cost Analysis. The cost analysis is based[6,7] on a plant producing 50,000 KKg per year of chloromethanes operating 24 hours per day and 300 days per year. A summary of capital cost, annual operating costs, and the cost impact for waste treatment follows.

WASTE STREAM NO. 3

1. ESTIMATED INSTALLED CAPITAL COST

BASIS: 1.0 KKg/Day of Heavy Ends

Equipment Item	Estimated Cost
FEED SYSTEM	$ 78,100
Feed Tank, 3,000 ℓ w/heating coil	
Stripping Column 15 cm dia x 6 M	
Associated heat exchangers	
Associated pumps (109 ℓ/hr feed)	
REACTOR SYSTEM	$ 71,500
Reactor, 10 cm dia x 3M, Nickel	
Preheater, Carbon	
Associated pumps	
HIGH BOILER COLUMN SYSTEM (TITANIUM)	$ 102,200
High Boiler Column, 30 cm dia x 7.6 M	
Associated Heat Exchanges	
High Boiler Column Pump	
CRUDE CCl_4 COLUMN SYSTEM	$ 53,000
Crude CCl_4 Column, 30 cm x 7.6 M, FRP	
Associated Heat Exchangers, Titanium	
Bottoms Pump, FRP	
CHLORINE COLUMN SYSTEM	$ 26,300
Chlorine Column, 30 cm dia x 7.6 M, FRP	
Associated Pumps, 4 gpm, Ni	

WASTE STREAM NO. 3

Equipment Item	Estimated Cost
PURE CCl_4 COLUMN SYSTEM	$ 28,600
Pure CCl_4 Column 30 cm x 7.6 M, FRP	
Associated Heat Exchangers	
Pure CCl Column Bottoms Pump, CS	
CAUSTIC SCRUBBER SYSTEM	$ 21,320
Caustic Scrubber, 30 cm x 7.6M, FRP	
Associated Pumps, CS	

Subtotal	$ 381,000
Engineering @ 10%	38,100
Contingency including freight @ 20%	76,200
Total	$ 495,300

WASTE STREAM NO. 3

2.	ANNUAL FIXED CHARGES		
	Depreciation $495,300 @ 10%/year		$ 49,500
	Interest $495,300 @ 10%/year		49,500
	Insurance and Taxes $495,300 @ 4%/year		19,800
	Total Annual Fixed Charges		$ 118,800
3.	DIRECT OPERATING COST		
	Raw Material Chlorine 510 KKg @ $165/KKg 50% Caustic - 37 KKg @ $160/KKg	$ 90,000	
	Utilities	11,200	
	Maintenance .04 x 495,300	19,800	
	Direct Labor 9,000 MH x 9.00 x 1.5=	121,500	
	Annual Direct Operating Cost		$ 242,500
	Annual Disposal Cost		100
	Total Annual Cost		$ 361,400
	Recovered Materials: 748 KKg/Year x ($320 x .7)/KKg		-167,500
	Net Total Annual Cost		$ 193,900
4.	COST PER KKg PRODUCT $193,900 ÷ 50,000		$ 3.88
5.	COST PER KKg WASTE $193,900 ÷ 300		$ 646.00
6.	IMPACT ON PRODUCT COST		
	(Market value of 1 KKg product = $320)		
	Cost/KKg ÷ Market Value/KKg = $3.88 ÷ $320		1.21%

REFERENCES

1 TRW Systems Group Assessment of Industrial Hazardous Waste Practices: Organic Chemicals, Pesticides and Explosives Industries. Redondo Beach. Environmental Protection Publication Report SW-118C, 1976.

2 Mark, H. F., McKetta, J. J., Othmer, D. F. and Stamden, A. Kirk-Othmer Encyclopedia of Chemical Technology, Second Edition, New York Interscience Publishers, John Wiley and Sons, 1965.

3 Chemical Market Reporter, September 20, 1976. Volume 210, Number 12, New York, Schnell Publishing Company, Inc.

4 Ottinger, R. S., Blumenthal, J. L., Dal Porto, D. F., Gruber, G. I., Santy, M. J., and Smith, C. C. Recommended Methods of Reduction Neutralization, Recovery, or Disposal of Hazardous Waste. Volume II, Toxicologic Summary. Redondo Beach. Environmental Protection Publication 224-581, 1973.

5 Arthur D. Little, Inc., Application of Physical, Chemical and Biological Treatment Techniques to Hazardous Waste Management. Cambridge, 2V. Environmental Protection Contract 68-01-3554, 1976.

6 Icarus Corporation, Capital and Operating Costs of Pollution Control Equipment Modules. Silver Spring. 2V. Environmental Protection Publication EPA-R5-73-023a, 1973.

7 Personal Communication: E. P. Crumpler, Environmental Protection Agency, to J. M. Genser, Processes Research, Inc., October 14, 1976.

8 Weast, R. C., Selby, S. M., and Hodgman, C. D., Handbook of Chemistry and Physics, 45th edition, Cleveland. The Chemical Rubber Co., 1964.

9 Sconce, J. S., Ed., Chlorine, Its Manufacture, Properties and Uses. New York, Reinhold Publishing Corporation, 1962.

10 Fuller, W. H., Ed., Residual Management by Land Disposal. Tucson. Environmental Protection Publication 600/9-76-015, 1976.

Heavy Ends From Fractionator - Epichlorohydrin Manufacture, Waste Stream No. 4

Waste Stream Description. Epichlorohydrin is manufactured[1] by the chlorohydroxylation of allyl chloride, followed by dehydrochlorination. See Figure 5-7. The last step in the dehydrochlorination reaction is to fractionate the reaction products, taking epichlorohydrin off overhead. The disposal of the "bottoms" from the fractionator is the subject of this study.

From a typical size epichlorohydrin plant, producing 75,000 metric tons per year of epichlorohydrin, the "bottoms" amount to about 4,000 metric tons per year, having this approximate composition:

Epichlorohydrin	2 Percent
Dichlorohydrin	11 Percent
Chloroethers	14 Percent
Trichloropropane	70 Percent
Others, Tar, Resins	3 Percent

The provisional limits[4,8] of epichlorohydrin for man in ppm are 0.05 in air and 1.5 in water, and although limits have not been set for the other 3 compounds, the heavy ends are classified as a potentially hazardous waste.[1,8,9]

Existing Treatment Methods. The present method[1] for disposing of the "bottoms" from the fractionator is long-term storage in steel tanks in on-site facilities.

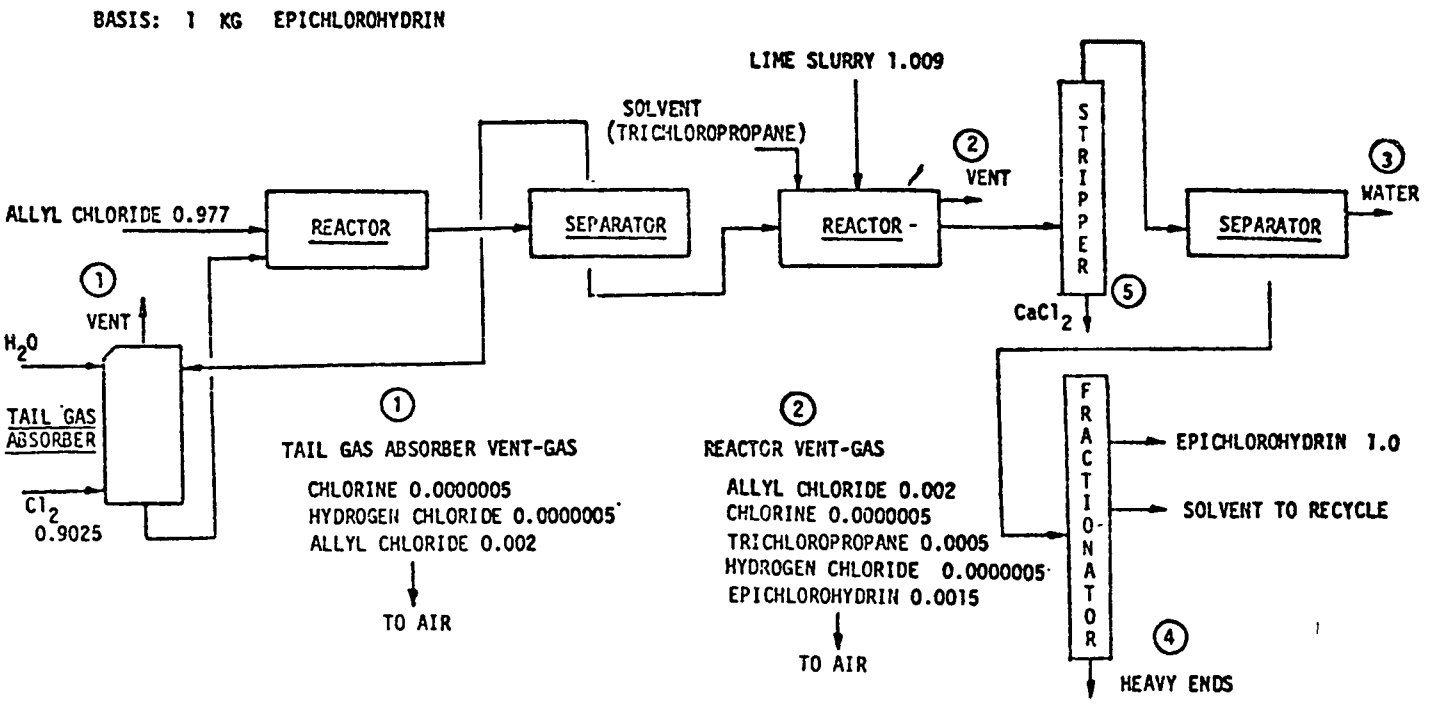

HEAVY ENDS FROM FRACTIONATOR, 4

WASTE STREAM NO. 4

FIGURE 5-7 EPICHLOROHYDRIN MANUFACTURE

Selected Alternative Treatment Process. In the initial phase of the study four processes were briefly reviewed as possible methods for treating the "bottoms": (1) Hydrogenation; (2) Chlorination (no chlorinolysis); (3) Vacuum Distillation; (4) Extraction. The treatment processes that recover epichlorohydrin are cheaper. Therefore, hydrogenation and chlorination processes were not considered further. On the assumption that the hydrolysis[2] of epichlorohydrin can be minimized, the extraction process, as described below, was selected. See Figure No. 5-4.

The waste "bottoms" from the fractionator are fed to the top of the extractor. A quantity of water (extractant), about twice that of the "bottom", is pumped into the bottom of the extractor where the "bottoms" would be extracted with water. The overhead extract (water phase) would contain the epichlorohydrin and the dichlorohydrin. The raffinate from the extractor would be mainly trichloropropane, chloroethers and other residues. The extract is returned to the lime reactor where the dichlorohydrin would be converted to epichlorohydrin and recovered as product. A vacuum evaporator would be provided in the overhead process train for adjustment of the water balance.

The raffinate from the extractor is fed to the waste fractionator where trichloropropane would be recovered overhead and returned to the lime reactor as the solvent. The bottoms, which are mostly trichloropropane, and chloroethers would be sent to chemical land disposal.

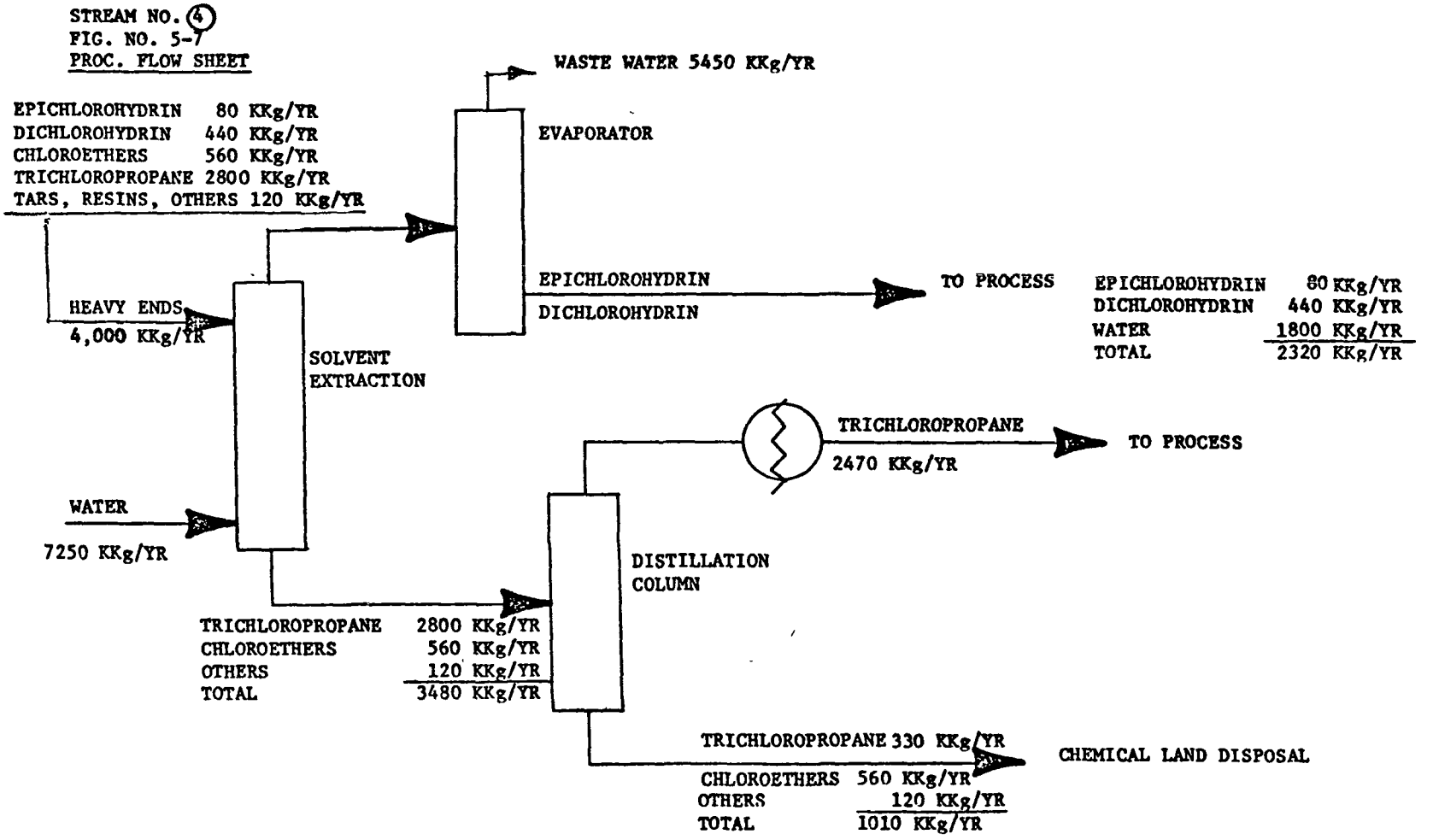

HEAVY ENDS FROM FRACTIONATOR - EPICHLOROHYDRIN MANUFACTURE

WASTE STREAM NO. 4

FIGURE NO. 5-8

The three steps of the treatment process are classified at these levels:[1,5]

Extraction	III
Evaporation	III
Trichloropropane Fractionation	IV

In the extraction step, the effectiveness of water as an extractant and the minimization of epichlorohydrin hydrolysis must be established. The concentration of epichlorohydrin and dichlorohydrin by vacuum evaporation must be verified. The fractionation of trichloropropane is probably already established.[1]

Benefits and Environmental Advantages and Disadvantages. For an epichlorohydrin plant producing 75,000 tons per year, the volume of waste would be reduced from about 4,000 metric tons per year to about 1,000 metric tons. Two of the hazardous constituents (epichlorohydrin and dichlorohydrin) of the untreated waste would have been removed. Assuming that the treatment process is reasonably effective (80 percent), then these resources would be recovered:

Epichlorohydrin	315 KKg per year
Trichloropropane	2000 KKg per year

The economics are favorable. Based only on the recovery of the epichlorohydrin,[3] the treatment costs are estimated at three cents per MT of product and $0.50 per MT of wastes.

The disadvantages are the capital investment[6,7] of about $245,000 and the total energy consumption of about 0.6 million kWh per year.

Cost Analysis. The cost analysis is based[1] on a plant producing 75,000 KKg per year of epichlorohydrin operating 24 hours per day and 300 days per year. A summary of capital cost, annual operating cost, and the cost impact for waste treatment is given on the following pages.

WASTE STREAM NO. 4

1. ESTIMATED INSTALLED CAPITAL COST

BASIS: 13.33 KKg/Day of Heavy Ends

Equipment Items	Estimated Cost
EXTRACTION SYSTEM	$ 97,700
Liquid Extractor, 25 cm dia x 2.1 M	
Three Pumps, 12 ℓ/min each	
FRACTIONATION SYSTEM	$ 65,800
Fractionation Column, 25 cm dia x 6.1 M	
Associated Heat Exchangers	
Two Pumps, 7.6 ℓ/min each	
EVAPORATION SYSTEM	$ 23,800
Evaporator, 1500 ℓ, 1.2 M dia x 1.2 M SS	
Associated Heat Exchangers and Vacuum Equipment	
One Pump, 38 ℓ/min	

Subtotal	$187,300
Engineering @10%	18,700
Contingency including freight @ 20%	37,500
Total	$243,500

WASTE STREAM NO. 4

2. ANNUAL FIXED CHARGES

Depreciation	$243,500 @ 10%/year	$ 24,400
Interest	$243,500 @ 10%/year	24,400
Insurance and Taxes	$243,500 @ 4%/year	9,800
Total Annual Fixed Charges		$ 58,600

3. DIRECT OPERATING COST

Raw Material		
Utilities	$ 88,700	
Maintenance 0.04 x $243,500	9,700	
Direct Labor 2,700 MH x 9.00 x 1.5	36,500	
Annual Direct Operating Cost		$134,900
Annual Disposal Cost		3,000
Total Annual Cost		$196,500
Recovered Materials: 315 KKg/Yr x $882 x 0.7		-194,500
Net Total Annual Cost		$ 2,000

4. COST PER KKg PRODUCT $2,000 ÷ 75,000 $ 0.03

5. COST PER KKg WASTE $2,000 ÷ 4,000 $ 0.50

6. IMPACT OF PRODUCT COST

(Market value of 1 KKg product = $882)

Cost/KKg ÷ Market Value/KKg = $0.03 ÷ $882 0.003%

REFERENCES

1 TRW Systems Group Assessment of Industrial Hazardous Waste Practices: Organic Chemicals, Pesticides and Explosives Industries, Redondo Beach, Environmental Protection Publication SW-118C, 1976.

2 Mark, H. F., J. J. McKetta, D. F. Othmer, and A. Stamden. Kirk-Othmer Encyclopedia of Chemical Technology, Second Edition, New York Interscience Publishers, John Wiley and Sons, 1965.

3 Chemical Market Reporter, September 20, 1976, Volume 210, Number 12, New York, Schnell Publishing Company, Inc.

4 Ottinger, R. S., J. L. Blumenthal, D. F. Dalporto, G. I. Gruber, M. J. Santy, and C. C. Smith. Recommended Methods of Reduction, Neutralization, Recovery, or Disposal of Hazardous Waste, Volume II, Toxicologic Summary, Redondo Beach, Environmental Protection Publication 224-581, 1973.

5 Arthur D. Little, Inc., Application of Physical, Chemical and Biological Treatment Techniques to Hazardous Waste Management. Cambridge, 2V., Environmental Protection Contract 68-01-3554, 1976.

6 Icarus Corporation, Capital and Operating Costs of Pollution Control Equipment Modules. Silver Spring, 2V. Environmental Protection Publication EPA-RS-73-023a, 1973.

7 Personal Communication. E. P. Crumpler, Environmental Protection Agency, to J. M. Genser, Processes Research, Inc., October 14, 1976.

8 Sax, N. I., ED. Dangerous Properties of Industrial Materials, New York, Reinhold Publishing Corporation, 1957.

9 Scone, J. S., ED, Chlorine, Its Manufacture, Properties and Uses, New York, Reinhold Publishing Corporation, 1962.

Centrifuge Residue Sludge

Toluene Diisocyanate (TDI) Manufacture

Waste Stream No. 5

Waste Stream Description. The production of mixed toluene diisocyanates (80 percent/20 percent mixture of toluene -2,4- diisocyanate and toluene -2,6-diisocyanate), or TDI's shown in Figure 5-9 is in steps[1,2,6], as follows:

(1) Introduction of a solution of toluene -2,4 diamine mixed with toluene -2,6 diamine along with an "inert" solvent (recycled O-dichlorobenzene containing dissolved recycled phosgene) to a jacketed, agitated vessel; (2) Addition of gaseous phosgene to produce a first-stage intermediate; (3) Transfer to a second reactor vessel, similarly equipped, and the addition of gaseous phosgene to produce the second-stage intermediate.

Excess phosgene is used. Unreacted phosgene and the liberation of hydrogen chloride gas in the second reactor make up the major gas stream components leaving the second reactor. This exit gas is sent to a recovery system to recover phosgene and hydrochloric acid. Gas scrubbers and other protection methods are used to recover and prevent escape of vent gases to the atmosphere, due to their potential toxicity. Recovered phosgene is recycled in solution in recovered solvent to the first reactor, and hydrochloric acid is recovered and sent to storage or sales. Waste gas scrubber effluent (containing dilute hydrochloric acid) is neutralized and sent to plant outfall. (4) Transfer from second reactor to a degasser vessel, where natural gas is blown through the

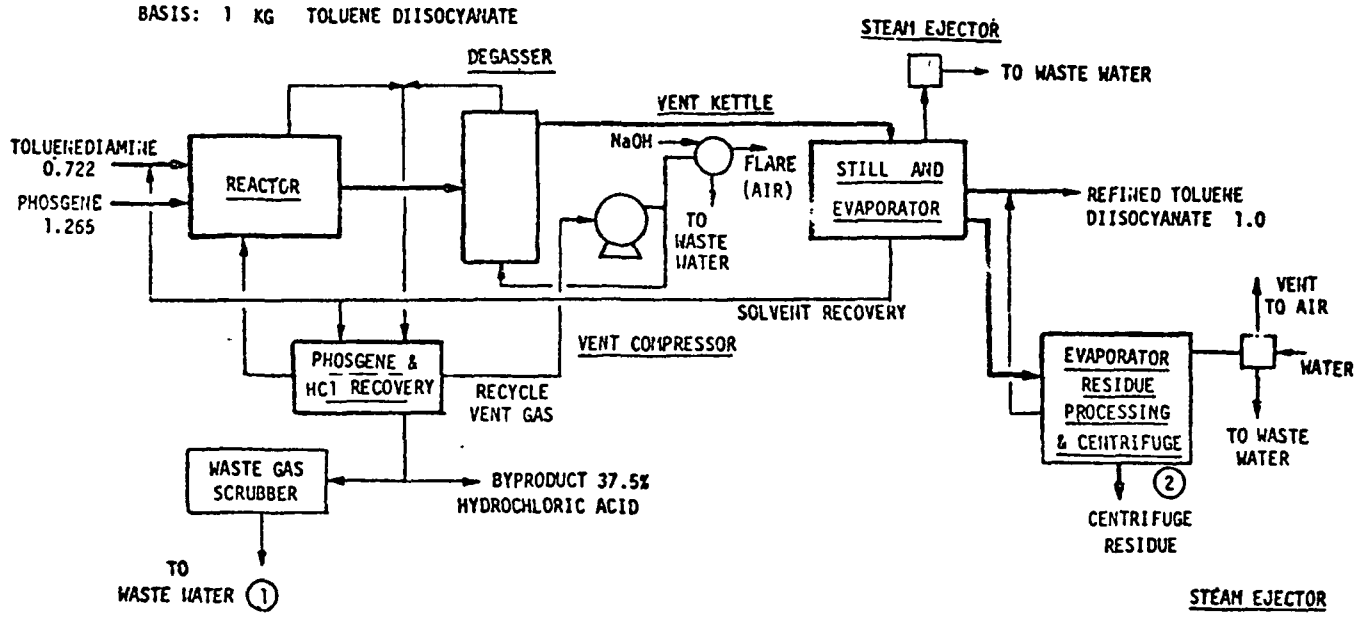

1

WASTE GAS SCRUBBER (WATER)

HCl 0.025

↓

WASTE WATER

2

CENTRIFUGE RESIDUE (LIQUID & SOLID)

POLYMERS AND TARRY MATTER 0.019
FERRIC CHLORIDE 0.00135
WASTE ISOCYANATES 0.00058

↓

LAND

CENTRIFUGE RESIDUE SLUDGE, 2

WASTE STREAM NO. 5

FIGURE 5-9 TOLUENE DIISOCYANATE MANUFACTURE

solution to remove the evolved hydrogen chloride gas. Treatment of evolved gas is described above. Natural gas is recycled through a vent gas compressor.

(5) Crude solution TDI's from the degasser is transferred to a still and evaporator unit for TDI purification and solvent recovery, purified TDI is sent to storage. Recovered solvent is recycled for use in phosgene recovery and as a solvent for the toluene diamine feed.

6. Evaporator residue is processed and centrifuged. The supernatant is recovered TDI which is sent to storage; centrifuge residue is a thick liquor/semisolid waste (Waste Stream No. 5) normally sent to chemical land disposal. It is composed[3] of 90 percent polymers and tarry matter, 6 percent ferric chloride (from process impurities), and 3 percent waste isocyanates. This waste, due to the isocyanates present, is considered potentially hazardous[4]. Production of this waste amounts to 0.021 kg per kg of TDI produced.

In 1973, 230,000 metric tons of TDI's were produced by eight major manufacturers. A typical TDI continuous process plant has an annual capacity of 27,500 metric tons, operating 300 days per year. On this basis, the waste quantity is estimated at 558 metric tons per year per typical plant.

Existing Treatment Methods. [1,6] The primary disposal of TDI wastes is containerization in drums and burial in landfills. About 25 percent of the wastes are presently placed in steel drums prior to burial. Plastic or concrete encapsulation is not employed. Leachate collection is employed as safeguard for an additional 15 percent of these wastes.

Disposal by placement in drums and burial is considered to be of questionable adequacy, however, unless secured landfills (to prevent possible environmental contamination) are also employed.

Selected Alternative Treatment Process.[2,3,5,6,7] The steps involved in the proposed treatment of wastes generated by production of toluene dissocyanate are as follows:

1. Hydrolysis (acid).
2. Distillation (vacuum).
3. Neutralization.
4. Biotreatment by aerated lagoon.

Details of the processes involved are as outlined below, and shown schematically in Figure No. 5-10.

1. Provide feed system consisting of an agitated holding tank and pump.

2. Treat polymers and isocyanates by hydrolysis in acid medium to form substituted ureas, carboxylic acids, and aromatic amines. Acid medium will inhibit formation of iron hydroxide flocculant from ferric chloride present.

3. Vacuum distill hydrolysis products in a stepwise (batch) operation to recover HCl and toluene 2,4 - diamine.

4. Return HCl to existing by-product hydrochloric acid recovery system for recycle. Return recovered amine to the production cycle.

5. Neutralize still bottoms in agitated vessel.

6. Biotreat still bottom wastes in aerated lagoon or oxidation pond.

Note that this treatment process presumes the formation of polymers of TDI[3] by interaction with itself, rather than polyurethane formation.

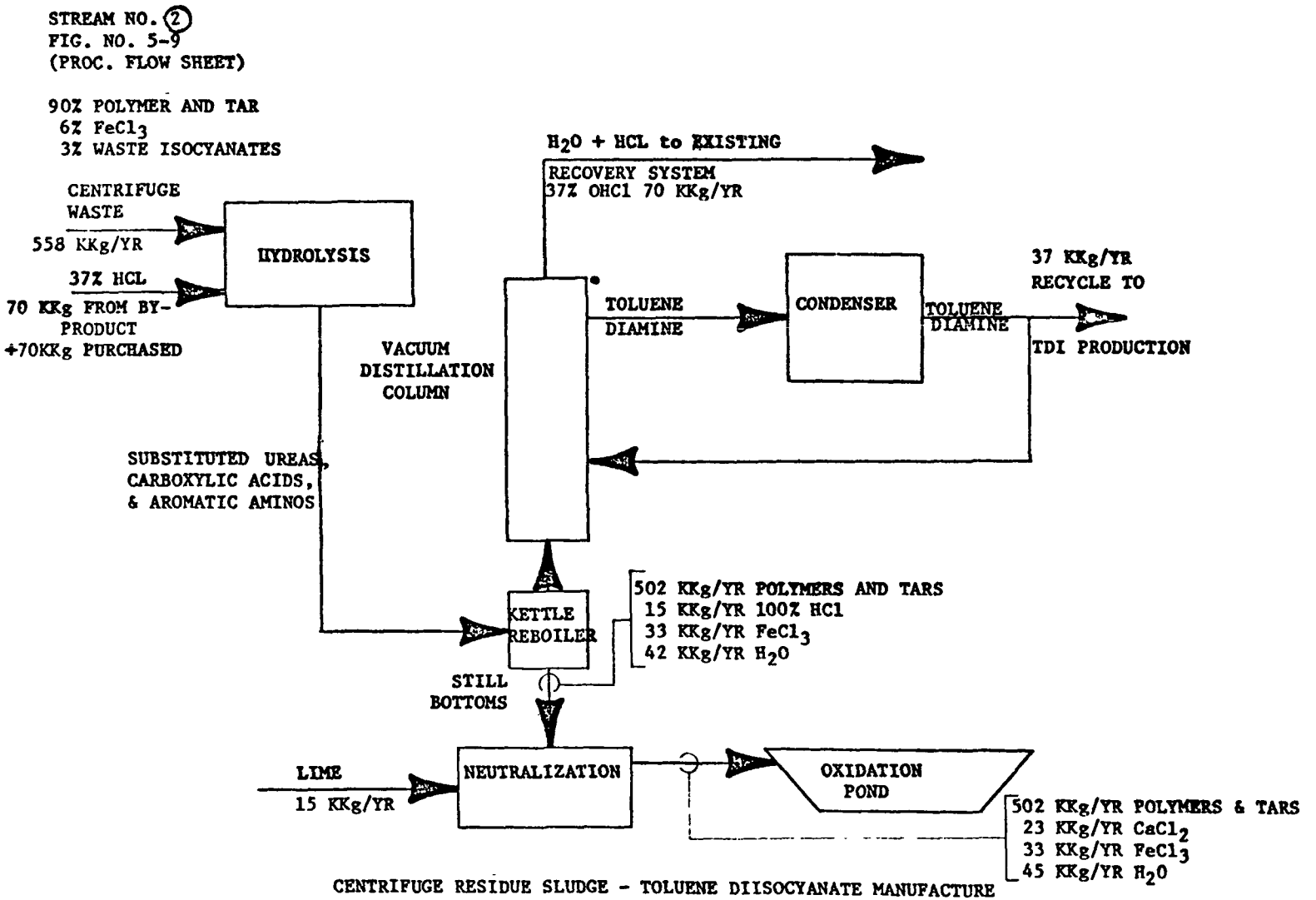

CENTRIFUGE RESIDUE SLUDGE - TOLUENE DIISOCYANATE MANUFACTURE

WASTE STREAM NO. 5

FIGURE NO. 5-10

The assumption is reasonable since polyurethane[2,3] formation from toluene diisocyanate is dependent upon interaction with polyols, which are not present.

Benefits and Environmental Advantages and Disadvantages. By the acid hydrolysis and distillation treatment for amine recovery, about 10 percent of the TDI wastes could be recycled and the remaining amount would be converted into biodegradeable wastes.

Advantages include the detoxification of the waste material, partial waste recovery, and reasonable energy input.

Disadvantages are the capital and operating costs of the treatment system for the relatively small amount of waste involved.

Cost Analysis. The cost analysis is based[1] on a plant producing 27,500 KKg per year of toluene diisocyanate operating 24 hours per day and 300 days per year. A summary of capital cost, annual operating cost, and the cost impact for waste treatment follows.

WASTE STREAM NO. 5

1. ESTIMATED INSTALLED CAPITAL COST

BASIS: 1.96 KKg/Day of Centrifuge Waste

Equipment Item		Estimated Cost
Centrifuge Pump	1ℓ/min	$ 13,140
Feed Hold Tank	3800 ℓ	51,100
Hold Tank Pump	150 ℓ/min	16,060
Hydrolysis Tank	65,000 ℓ	78,875
Hydrolysis Tank Pump	150 ℓ/min	6,510
Kettle Reboiler	5 M^2	118,260
Batch Distillation Column	46 cm dia x 4.5 M	92,710
Column Condenser	76 ℓ/min	29,200
Vacuum Ejector for Still	27 Kg/Hr Air	40,530
Condenser Pump	20 ℓ/min	4,525
Still Bottoms Pump	75 ℓ/min	5,330
Neutralization Tank	3800 ℓ	51,100
Gear Pump	75 ℓ/min	5,330
Aeration Lagoon (Land Not Included)	4050 M^2	$ 75,000
Subtotal		$ 584,700
Engineering @ 10%		58,500
Contingency including freight @ 20%		117,000
Total		$ 760,200

WASTE STREAM NO. 5

2.	ANNUAL FIXED CHARGES		
	Depreciation $760,000 @ 10%/year		$ 76,000
	Interest $760,000 @ 10%/year		76,000
	Insurance and Taxes $760,000 @ 4%/year		30,400
	Total Annual Fixed Charges		$182,400
3.	DIRECT OPERATING COST		
	Raw Material Lime 15 KKg @ 27.50 37% HCl 70 KKg @ 37.40	$3,000	
	Utilities	9,700	
	Maintenance 0.04 x 760,000	30,400	
	Direct Labor 4800 hrs x 9.00 x 1.5	64,800	
	Annual Direct Operating Cost		$107,900
	Annual Disposal Cost		
	Total Annual Cost		$ 290,300
	Recovered Material: 37 KKg 2,4 Toluene Diamine @ 1389/KKg		- 51,400
	Net Total Annual Cost		$ 238,900
4.	COST PER KKg PRODUCT $ 238,900 ÷ 27,500		$ 8,69
5.	COST PER KKg WASTE $ 238,900 ÷ 558		$ 428.
6.	IMPACT ON PRODUCT COST		
	(Market value of 1 KKg Product = $1124.55)		
	Cost/KKg ÷ market value/KKg = $8.69 ÷ $1124.55		0.77%

REFERENCES

1. TRW Systems Group: Assessment of Industrial Hazardous Waste Practices: Organic Chemicals, Pesticides, and Explosives Industries. U. S. Environmental Protection Agency Publication SW-118c, 1976.

2. Kirk - Othmer Encyclopedia of Chemical Technology, 2nd ed. V. 12. New York, Interscience Publishers, 1967.

3. Personal Communication, Arthur D. Little, Inc., Associates, to J. M. Genser, Processes Research, Inc. October 19, 1976.

4. National Technical Information Service, U. S. Department of Commerce; Recommended Methods of Reduction, Neutralization, Recovery, or Disposal of Hazardous Waste, V. II, Toxicologic Summary. TRW Systems Group, Environmental Protection Publication PB-224 581, August 1973.

5. Ibid, V. IV, Disposal Process Descriptions, Biological and Miscellaneous Waste Treatment Processes. TRW Systems Group. Environmental Protection Publication PB-224 583, August 1973.

6. Ibid, V. X, Industrial and Municipal Disposal Candidate Waste Stream Constituent Profile Reports, Organic Compounds. TRW Systems Group, Environmental Protection Publication PB-224 589, August 1973.

7. Arthur D. Little, Inc. Application of Physical, Chemical and Biological Treatment Techniques to Hazardous Waste Management. Cambridge, 2 V. Environmental Protection Contract 68-01-3554, 1976.

8. Icarus Corporation. Capital and Operating Costs of Pollution Control Equipment Modules, Silver Spring, Maryland. 2V. Environmental Protection Publication EPA-RS-73-023b, 1973.

9. Chemical Market Reporter, September 20, 1976, Vol. 210, No. 12. New York, Schnell Publishing Company, Inc.

10. Personal Communication. E. P. Crumpler, United States Environmental Protection Agency, to J. M. Genser, Processes Research, Inc., October 14, 1976.

Heavy Ends From Ethylene Dichloride Recovery Still - Vinyl Chloride Monomer Manufacture - Waste Stream No. 6

Waste Stream Description. One of the intermediates, from which vinyl chloride is made, is 1,2 dichloroethane, which is known in the trade as ethylene dichloride (EDC). EDC is made by the chlorination[1,2] of ethylene in liquid EDC. See Figure 5-11. The last step in the process for making EDC is to fractionate the reaction products, taking EDC off overhead. The purpose of this study is to propose an alternate method for disposing of the "heavy ends" from the "EDC" still.

A typical plant in the United States produces about 136,000 metric tons per year of vinyl chloride monomer. The EDC wastes[1] amount to about 1,400 metric tons per year, having the following approximate composition and provisional limits:

Constituent	Percent	Provisional Limits For Air	Water
1,2 dichloroethane	23	0.5	10
1,1,2 trichloroethane	38	1.8	(19)[1]
1,1,1,2 tetrachloroethane	38	0.05	1.75
Tars	1	-	-

[1] This is the limit for 1,1,1 trichloroethane, which is less toxic than 1,1,2 trichloroethane.

The "heavy ends" are classified [1,2,5] as highly dangerous and bioaccumulative.

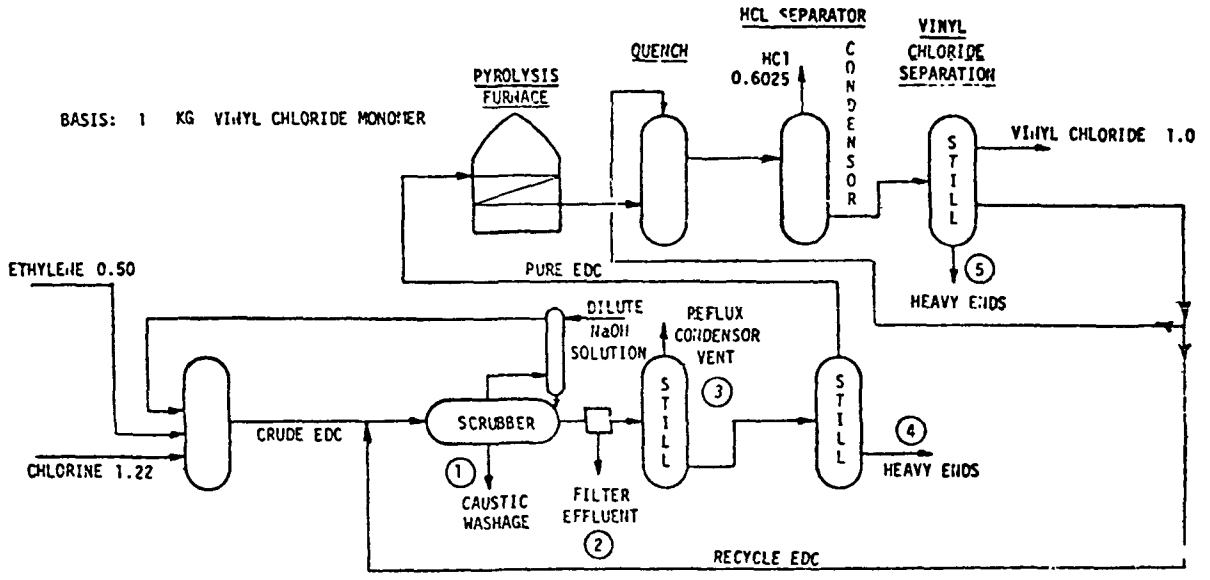

HEAVY ENDS	
ETHYLENE DICHLORIDE	0.0024
1,1,2 TRICHLOROETHANE	0.004
TETRACHLOROETHANE	0.004
TARS	TRACE

TO LAND

HEAVY ENDS	
HEAVY ENDS	0.037
ETHYLENE DICHLORIDE	0.0008
TARS	0.00005
SOLIDS ASH	0.0002

TO LAND

HEAVY ENDS FROM ETHYLENE DICHLORIDE RECOVERY STILL, (4) AND (5)

WASTE STREAM NO. 6

FIGURE 5-11 VINYL CHLORIDE MONOMER MANUFACTURE

Existing Treatment Methods. The present methods for disposing of the "heavy ends" from the EDC still are landfill and uncontrolled incineration. About 30 percent of heavy ends, sent to landfill, is protected by the use of steel drums.[1]

Selected Alternative Treatment Process. After an initial review of other treatment processes, it was decided to use the three step treatment shown in Figure No. 5-12 that recovers chlorinated hydrocarbons. Step 1 would be to strip off the EDC, that is remaining in the "heavy ends," using a "LUWA" type thin film column. The distillate, which would be mainly EDC, would be returned to the EDC process (Figure 5-11) with other recycled EDC.

Step 2 of the treatment would be to dehydrochlorinate the 1,1,2 trichloroethane at 50C and atmospheric pressure, using a slurry of calcium hydroxide. The product, 1,1 dichlorethylene, also known as vinylidene chloride would be distilled off (32C, BP), yielding over 300 metric tons per year. It can be used in the production[2] of copolymeric materials and 1,1,1 trichloroethane.

Step 3 would be to dehydrochlorinate the 1,1,1,2 tetrachloroethane with a calcium hydroxide slurry at about 100C and atmospheric pressure. The product would be 1,1,2 trichloroethylene, which would be distilled off (87C BP) yielding about 340 metric tons per year. In 1973 over 300,000 metric tons of 1,1,2 trichloroethylene were produced in the United States.

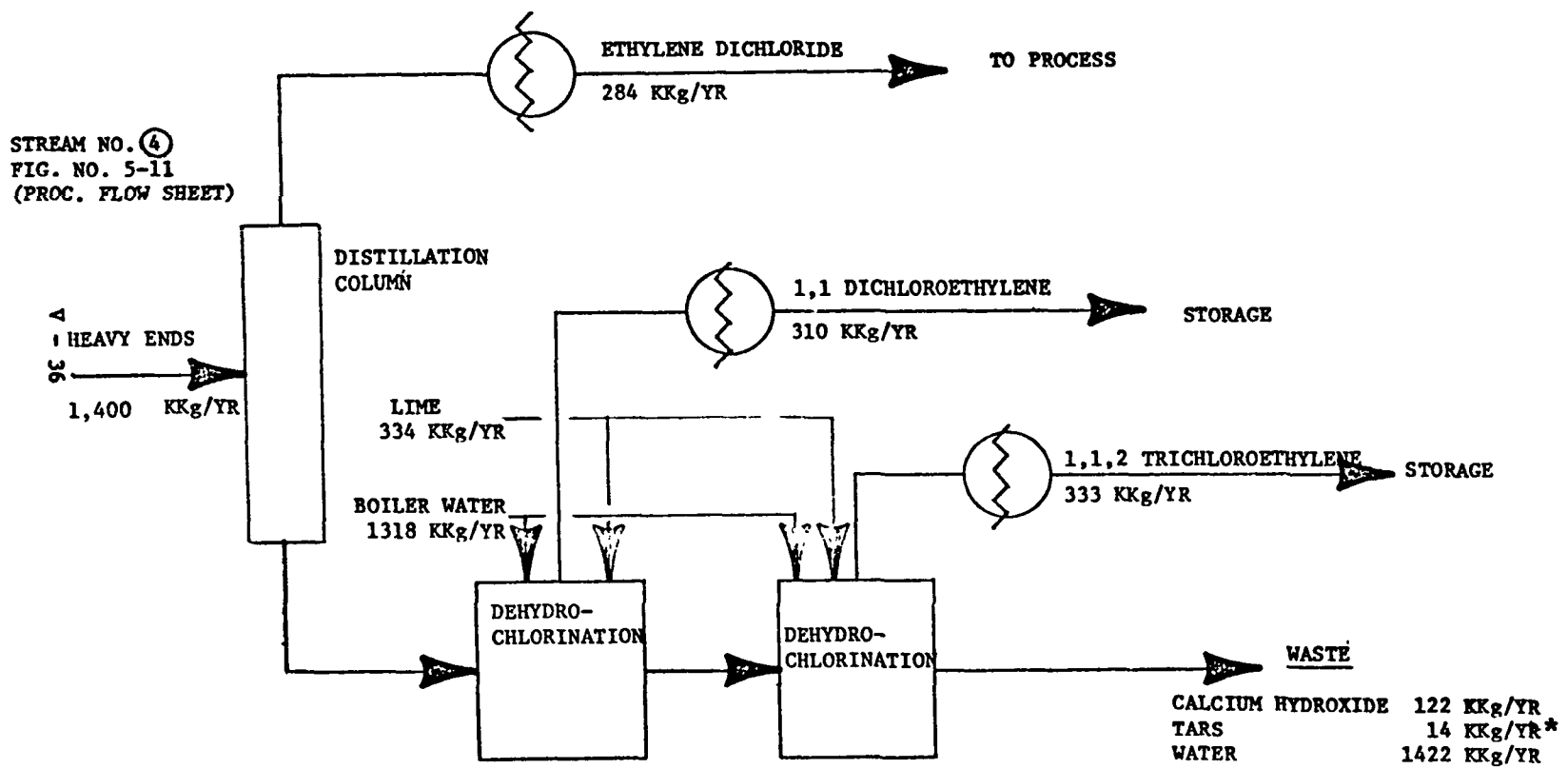

CALCIUM HYDROXIDE	122 KKg/YR
TARS	14 KKg/YR*
WATER	1422 KKg/YR
CALCIUM CHLORIDE	318 KKg/YR
OTHER	249 KKg/YR*
TOTAL	2121 KKg/YR

HEAVY ENDS FROM EHTYLENE DICHLORIDE RECOVERY STILL - VINYL CHLORIDE MONOMER MANUFACTURE

*Potentially hazardous

WASTE STREAM NO. 6

FIGURE NO. 5-12

The dehydrochlorination process is well defined.[2,3] The two stage dehydrochlorination must be verified. The application of thin film columns for stripping EDC from heavy ends must be verified.

Benefits and Environmental Advantages and Disadvantages. The volume of hazardous wastes would be reduced from about 1,400 to 265 metric tons per year.

The annual recovery of resources would be over 900 metric tons with an estimated value of about $200,000.[4,7,8]

The disadvantages are the capital investment of $225,000, an annual energy consumption of 2.8 million kWh, and the generation of over 440 metric tons per year of nonhazardous solid wastes.

Cost Analysis. The cost analysis is based[1] on a plant producing 136,000 KKg per year of vinyl chloride monomer operating 24 hours per day and 300 days per year. A summary of capital cost, annual operating cost, and the cost impact for waste treatment follows.

WASTE STREAM NO. 6

1. ESTIMATED INSTALLED CAPITAL COST

BASIS: 4.67 KKg/Day of Heavy Ends from EDC Recovery Still

Equipment Item	Estimated Cost
A. ETHYLENE DICHLORIDE DISTILLATION	$ 24,300
Vacuum Still-Scraped Surface	
Associated Heat Exchangers and Vacuum Pump	
Two Pumps, 3.8 ℓ/min.	
B. 1,1 DICHLOROETHYLENE DEHYDROCHLORINATION	$ 44,700
Dehydrochlorinator, 61 cm dia x 1.83 M	
Scrubber, 30.5 cm dia x 91.5 cm	
Associated Heat Exchangers	
Two Pumps, 3.8 ℓ/min	
C. 1,1,2 TRICHLOROETHYLENE DEHYDROCHLORINATION	$ 48,000
Dehydrochlorinator, 61 cm dia x 1.83 M	
Scrubber, 30.5 cm dia x 91.5 cm	
Associated Heat Exchangers	
Three Pumps, 3.8 ℓ/min	
D. LIME PREPARATION	$ 54,800
Mixer, 1.83 m dia x 2.44 m	
Scale, 1,200 Kg	
One Pump, 38 ℓ/min	
Subtotal	$171,800
Engineering @ 10%	17,200
Contingency including freight @ 20%	34,400
Total	$223,400

WASTE STREAM NO. 6

2. ANNUAL FIXED CHARGES

Depreciation	$ 223,400 @ 10%/year	$ 22,400
Interest	$ 223,400 @ 10%/year	22,400
Insurance and Taxes	$ 223,400 @ 4%/year	8,900
Total Annual Fixed Charges		$ 53,700

3. DIRECT OPERATING COST

Raw Material Lime 334 KKg @ $44 Boiler Water 1350 cu meters @ $0.14	$ 14,900	
Utilities	74,900	
Maintenance 0.04 x 223,400	9,000	
Direct Labor 3000 MH x 9.00 x 1.5	40,500	
Annual Direct Operating Cost		139,300
Annual Disposal Cost		7,200
Total Annual Cost		$ 200,200
Recovered Materials: 1,2 Dichloroethane 284 KKg x 242 x 0.7=48,000 1,1 Dichloroethylene 310 KKg x 242 x 0.7=52,000 1,1,2 Trichloroethylene 333 KKg x 435 x 0.7=101,000		-201,000
Net Total Annual Cost		$ - 1,200

4. COST PER KKg PRODUCT $-1,200 ÷ 136,000 $ -0.009

5. COST PER KKg WASTE $-1,200 ÷ 1,400 $ -0.86

6. IMPACT ON PRODUCT COST

(Market value of 1 KKg product = $300)

Cost/KKg ÷ Market Value/KKg = $-0.009 ÷ $300 0.003%

REFERENCES

1. TRW Systems Group. Assessment of Industrial Hazardous Waste Practices. Organic Chemicals, Pesticides and Explosives Industries. Redondo Beach, Environmental Protection Publication, Report SW-118C, 1976.

2. Mark, H. F., J. J. McKetta, D. F. Othmer, and A Stamden, ED. Kirk-Othmer Encyclopedia of Chemical Technology, 2nd Ed. New York Interscience Publishers, John Wiley and Sons, 1965.

3. Sconce, J. S., ED. Chlorine, Its Manufacture, Properties, and Uses. New York. Reinhold Publishing Corporation. 1962.

4. Chemical Market Reporter. September 20, 1976. Volume 210, Number 12. New York. Schnell Publishing Company, Inc.

5. Ottinger, R. S., J. L. Blumenthal, D. F. Dal Porto, G. I. Gruber, M. J. Santy, and C. C. Smith. Recommended Methods of Reduction Neutralization, Recovery, or Disposal of Hazardous Waste. Volume II, Toxicologic Summary. Redondo Beach. Environmental Protection Publication 224-581, 1973.

6. Arthur D. Little, Inc. Application of Physical, Chemical, and Biological Treatment Techniques to Hazardous Waste Management. Cambridge. 2V. Environmental Protection Contract 68-01-3554, 1976.

7. Icarus Corporation. Capital and Operating Costs of Pollution Control Equipment Modules. Silver Spring. 2V. Environmental Protection Publication EPA-R5-73-023a, 1973.

8. Personal Communication. E. P. Crumpler, Environmental Protection Agency, to J. M. Genser, Processes Research, Inc., October 14, 1976.

Heavy Ends From Methanol Recovery Columns

Methyl Methacrylate Monomer Manufacture - Waste Stream No. 7

Waste Stream Description. Methyl methacrylate is commercially produced by the use of acetone, hydrogen cyanide and methanol as raw materials in the cyanohydrin process.[2,4] See Figure 5-13. During the manufacturing process a waste stream is produced from the methanol recovery section, which is liquid heavy ends, consisting of hydroquinone and polymers. This waste stream is then discharged to landfill.[1] The purpose of this study is to evaluate potential alternative methods for disposing of these residues.

In 1973 production of methyl methacrylate in the United States was 320,000 metric tons.[2] A typical process facility has a capacity of about 55,000 metric tons per year.[2]

For the purposes of this study an annual plant capacity of 55,000 metric tons has been assumed and is based on operating 24 hours per day, 300 days per year.

Existing Treatment Method. The most prevalent method of disposal for the waste stream from the methanol recovery section is uncontrolled incineration.[1,2] Based on production of 320,000 metric tons of methyl methacrylate the total quantity of waste for incineration would be 4,730 metric tons per year. For a plant of 55,000 metric tons the waste stream would amount to 813 metric tons per year.

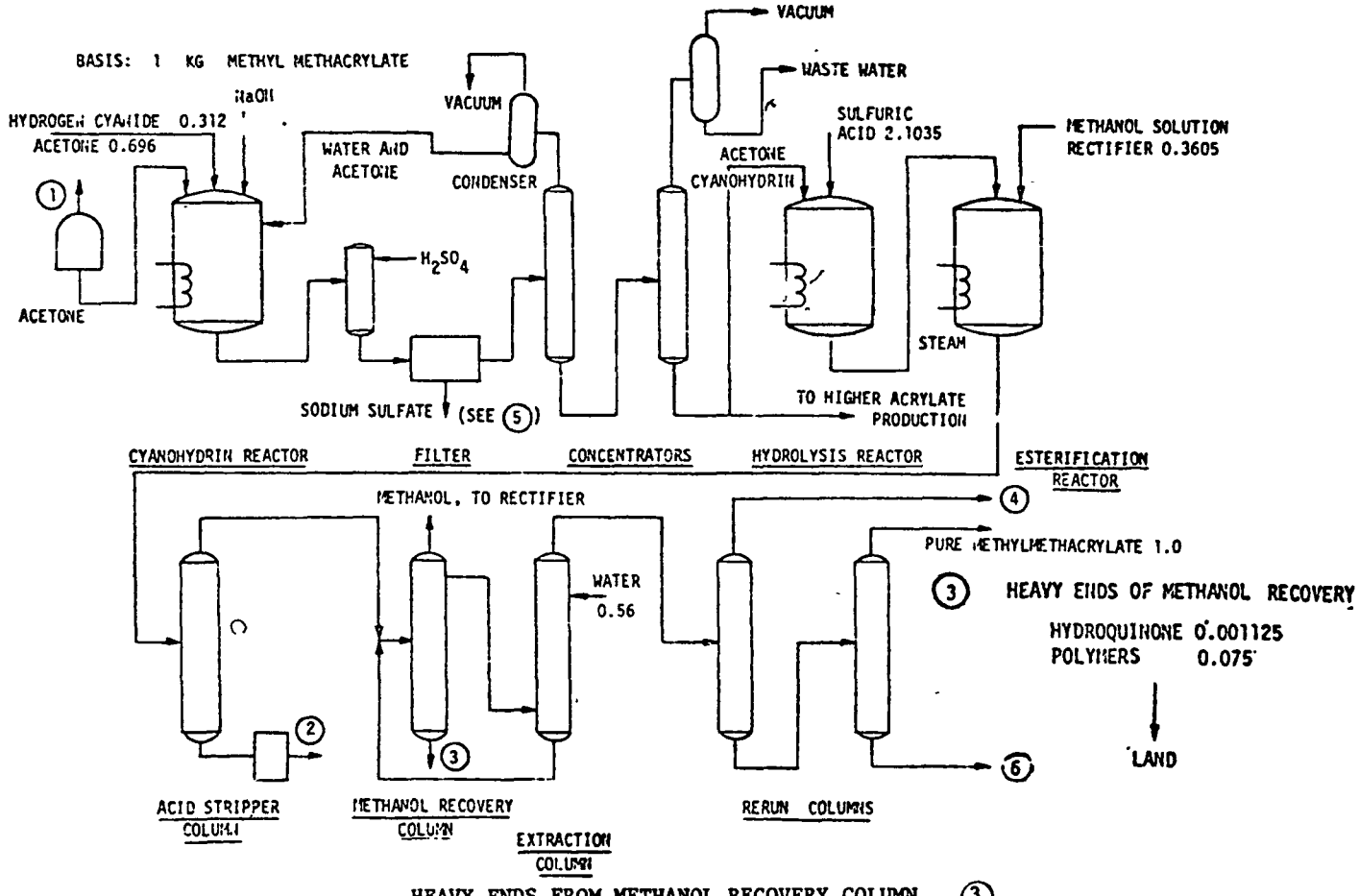

HEAVY ENDS FROM METHANOL RECOVERY COLUMN, (3)

WASTE STREAM NO. 7

FIGURE 5-13 METHYL METHACRY[redacted] MANUFACTURE

Alternative Treatment Methods Option No. 1 - Alternate Manufacturing Process. Waste disposal problems created by the acetone cyanohydrin (ACH) process in the manufacture of methyl methacrylate have resulted in the investigation of many new manufacturing processes. Of all the processes investigated the one which has proven the most feasible is the air oxidation of isobutylene.[3] This process developed by the Asahi Glass Company of Japan eliminates the existing waste treatment problems and leaves as a waste stream a solution of water and acetic acid. The acetic acid can be recovered through extraction and distillation while the water is recycled back to the process.[3] Indications are that this process is superior to the ACH process with respect to the process technology and because of elimination of waste streams. If it were to replace the ACH process the waste stream disposal problems will be eliminated.

This approach would only be feasible where an existing plant was being replaced or a new plant was being built.

Option 2 - Recycling. As a part of the manufacturing process as much waste material as possible should be recycled back into the processing stream. This depends on the manufacturer's processing scheme and is a method of choice wherever possible.[1]

Option 3 - Incineration. A review of available current technology indicates that controlled incineration represents the best method for disposal of the waste stream coming from the methanol recovery section. See Incineration Section.

REFERENCES

1. TRW Systems Group. Recommended Methods of Reduction, Neutralization, Recovery, or Disposal of Hazardous Waste. Volume X, Profile Report. Environmental Protection Agency Report No. EPA-670/2-73-053-j, August 1973.

2. TRW Systems Group. Assessment of Industrial Hazardous Waste Practices: Organic Chemicals, Pesticides and Explosives Industries: Environmental Protection Publication, Report SW-118C, 1976.

3. New Route to Methyl Methacrylate, Hydrocarbon Processing, pages 115, 116 and 117, October 1975.

4. Kirk - Othmer, Encyclopedia of Chemical Technology, Second Edition, Volume 13, New York Interscience Publishers, John Wiley and Sons. 1965.

5. Gessner, G. Hawley, The Condensed Chemical Dictionary, Eighth Edition, Revised by Van Nostrand Reinhold Company.

6. Arthur D. Little, Inc., Analysis of Potential Application of Physical, Chemical and Biological Treatment Techniques to Hazardous Waste Management. Cambridge, Mass. Environmental Protection Agency Contract No. 68-01-3554, 1976.

Heavy Ends From Purification Column

Acrylonitrile Manufacture - Waste Stream No. 8

Waste Stream Description. Most of the acrylonitrile produced commercially today is made by catalytic hydrocyanation of a mixture of propylene, anhydrous ammonia and air.[1,2,3] The Sohio process, as shown in Figure 5-14, is used for production of acrylonitrile by more than 45 plants throughout the world with an aggregate capacity of over 5 billion pounds per year, or 2,270,000 metric tons.[3] In 1973, typical plant capacities ranged from 4,500 metric tons to 160,000 metric tons per year.[1] One new plant being built in the United States, and scheduled to come on line in 1976 has a capacity of over one billion pounds per year, or about 450,000 metric tons,[3] two-thirds of the total aggregate 1973 U. S. production. For the purpose of this study, a plant size of 80,000 metric tons per year has been assumed.[1] The corresponding potentially hazardous waste from the product purification step of the process would equal about 160 metric tons per year.

Existing Treatment Method. The wastes are for the most part presently sent to land disposal, where there is a potential for groundwater contamination.

Alternative Treatment Methods. The heavy ends consist of higher molecular nitrile compounds, complex polymers and often unidentifiable compounds such as tars. Tars and polymers are usually very complex compounds formed by reactions

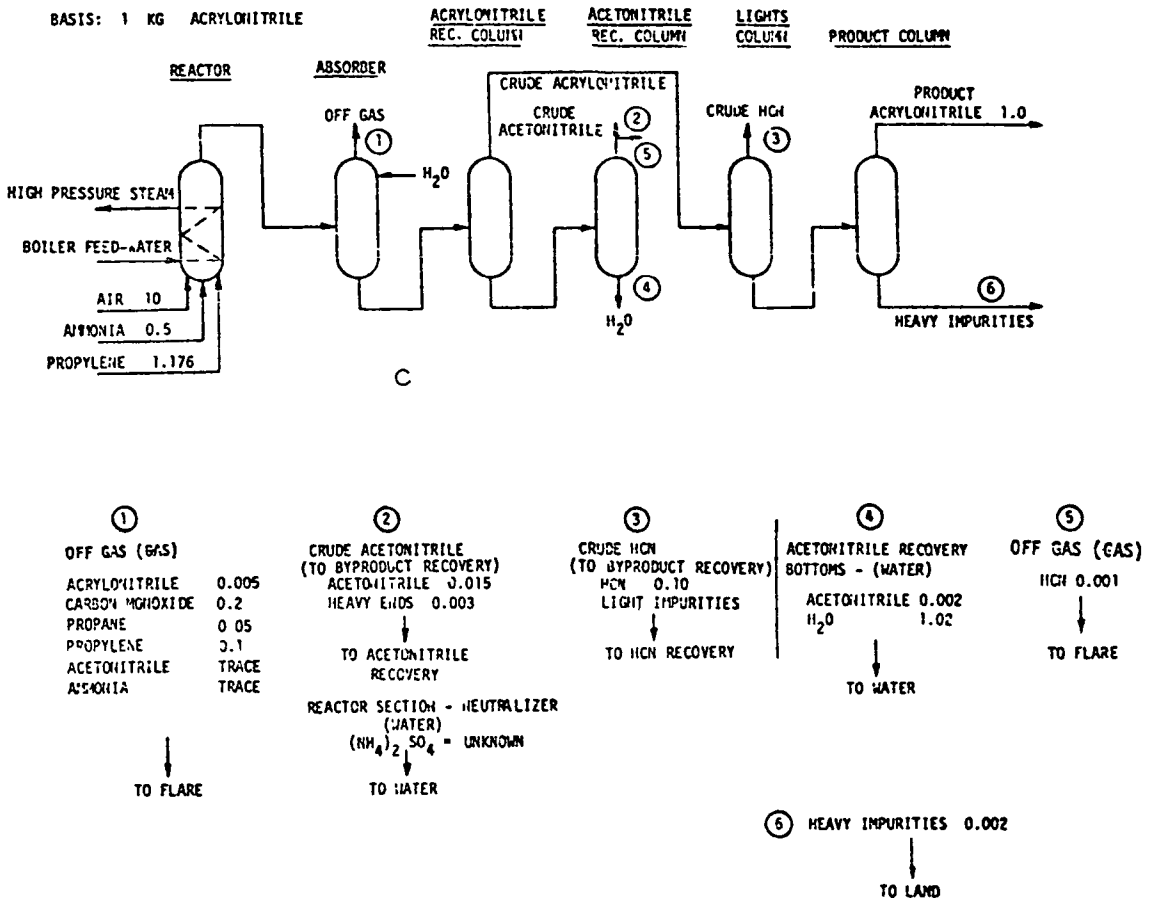

HEAVY ENDS FROM PRODUCT COLUMN, (6)

WASTE STREAM NO. 8

FIGURE 5-14 ACRYLONITRILE (SOHI[redacted]ESS) MANUFACTURE

competing with the primary reactions during petrochemical processing. As such, they typically do not lend themselves to any chemical treatment and are usually not amenable to biological treatment.

Incineration, if properly controlled, is capable of completely destroying these cyanide and other organic complexes. The relatively small quantity of nitrogen oxides thus emitted to the atmosphere is by far less a pollution factor than the potential contamination of groundwater with compounds, many of which have been found to exhibit carcinogenic effects.[4] The literature[3,4] would seem to indicate that many of these complex organic by-products are formed with the slight excess of ammonia present during the primary reaction in the fluid bed catalytic reactor. Thus removal of the excess ammonia by scrubbing the products of reaction with a mineral acid makes it unavailable for the formation of by-products. The direct reaction of ammonia and acrylonitrile forms various complex propionitriles. The use of sulfuric acid as scrubbing liquor yields a solution of ammonium sulfate, which usually is further concentrated and crystallized to yield a salable fertilizer by-product. As such, the waste quantity destined for controlled incineration is reduced and a valuable feed stock such as ammonia is recovered, rather than flared, and converted to a valuable fertilizer by-product. See Incineration Section of this report.

REFERENCES

1. TRW Systems Group. Assessment of Industrial Hazardous Waste Practices; Organic Chemicals, Pesticides and Explosives Industries. Environmental Protection Publication, Report SW-118C, 1976.

2. Mark, H. F., J. J. McKetta, D. F. Othmer, and A. Standen. Kirk-Othmer Encyclopedia of Chemical Technology, 2nd Ed. New York. Interscience Publishers, John Wiley and Sons, 1967.

3. Petrochemical Handbook Processes. Hydrocarbon Processing, 54:(11):158-160, November.1975.

4. Jones, H. R. Environmental Control in the Organic and Petrochemical Industries, 1971. Noyes Data Corporation, Park Ridge, N. J.

Residue From Purification Column - Maleic Anhydride Manufacture - Waste Stream No. 9

Waste Stream Description. Most of the maleic anhydride produced commercially is made by the catalytic oxidation of benzene in the vapor phase.[1,2,3] See Figure 5-15. Maleic anhydride may also be obtained as a by-product in the manufacture of phtalic anhydride. It is estimated that the latter may potentially account for about 20 percent of the total world production of maleic anhydride.[4] The last step in the process is the purification of the crude maleic anhydride by vacuum distillation to obtain specification grade product. The vacuum still bottoms contain in excess of 0.03 kg of potentially hazardous components per kilogram of product and constitute a hazardous process waste discharge to land. The purpose of this study is to evaluate potential alternative methods for disposing of the vacuum still bottoms.

In 1973, 128,000 metric tons of maleic anhydride were produced in the United States. A typical plant[1] ranged in size from 9,000 to 13,600 metric tons per year. Present technology enables plant capacities of up to 22,700 metric tons per year based on a simple reactor train.[3] For this study an annual capacity of 11,000 metric tons, operating 300 days per year, 24 hours per day, was assumed. The corresponding waste stream from the still bottoms is about 333 metric tons per year, having the following approximate composition and these provisional limits:

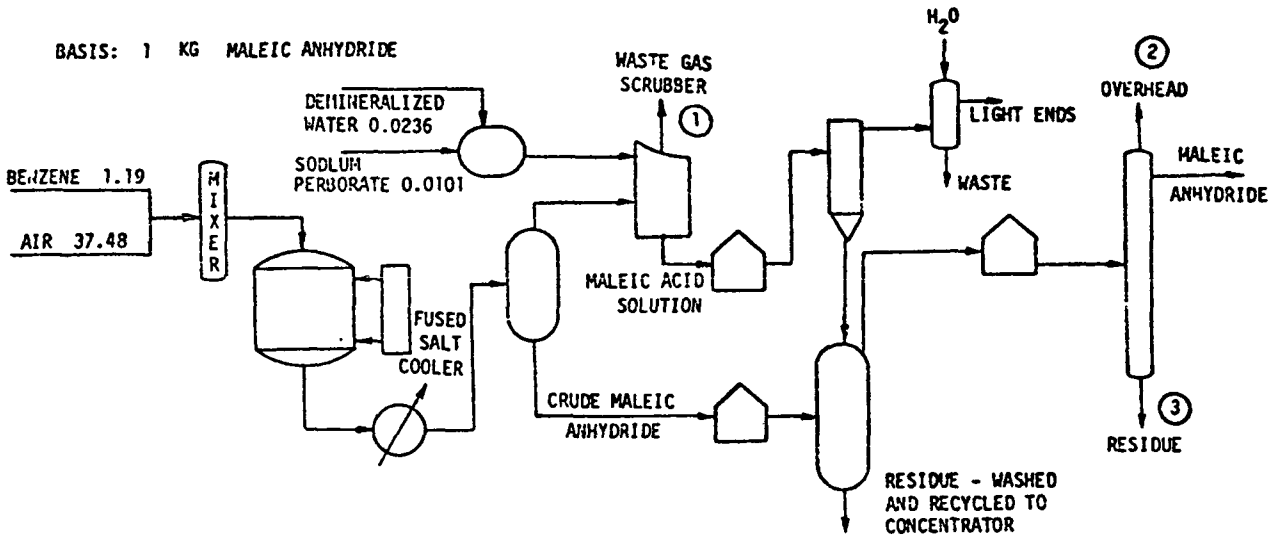

REACTOR	SEPARATOR	SCRUBBER	CONCENTRATOR DEHYDRATOR	DISTILLATION COLUMN

1 WASTE GAS SCRUBBER (AIR)

BENZENE	0.131
CARBON MONOXIDE	0.78
MALEIC ACID	TRACE

↓ TO AIR (FLARE)

2 DISTILLATION COLUMN OVERHEAD-(WATER)

MALEIC ACID	0.0006
H_2O	0.391

↓ TO WATER

3 DISTILLATION COLUMN BOTTOMS

MALEIC ANHYDRIDE	0.00375
HIGH BOILERS (TAR, FUMARIC ACID, CHROMOGENIC CMPDS)	0.026

↓ TO LAND

STILL BOTTOMS, 3

WASTE STREAM NO. 9

FIGURE 5-15 MALEIC A[redacted]IDE

Component	Percent Weight	Provisional Limits (ppm)[7] Air	Water
Maleic anhydride	12	0.0025	0.01 TLV
Fumeric acid, chromogenic compounds, tars	88	-	-

Existing Treatment Method. The present most prevalent method of disposal for the still bottoms is landfill. It is estimated that about 5 percent of the heavy ends, sent to landfill is protected by the use of steel drums.[1]

Alternative Treatment Methods. Possible recovery of the maleic anhydride (12.4 percent of the waste stream) by washing with water[5] to yield a maleic acid solution would appear questionable from the following technical and economic considerations: (1) Maleic anhydride quantity constitutes only about 0.3 percent of total product output. Recovery of such a small quantity, even if technically feasible, would result in relatively high capital and operating costs; (2) Recycling of a maleic acid solution containing other contaminants and color bodies as a result of hydrolysis would probably have an adverse affect on the rather stringent end product specification for maleic anhydride. Typical commerical specification is the following:[3] Maleic anhydride content, minimum 99.8 percent; solidification point, minimum 52.6C; ash content, maximum 10 ppm; iron content, maximum 5 ppm; color of melt, APHA maximum 20. (3) Remaining residues would be highly corrosive due to low pH following hydrolysis. As such, neutralization would be necessary prior to final disposal of this material by either incineration or landfill.

Review of present technology for the production of maleic anhydride would seem to focus on process improvements to achieve a reduction in the pollutants. Noted innovations are improved selectivity of catalysts and careful design of the dehydration processing step to minimize residence time and temperature. This results in lower levels of isomerization of maleic acid to fumaric acid and as such reduces quantitatively the residue from the vacuum distillation unit. As noted maleic anhydride may also be recovered as a by-product from the tail gas scrubbing of a phthalic anhydride plant. These processes[4,6] while processing a much larger and relatively "clean" waste stream, serve to illustrate the relatively high cost for such a plant recovery system as well as the fact that the "recovered" maleic anhydride product quality is below that of the virgin product obtained from benzene. This makes the recovered product unfit for certain end uses. These referenced installations are in the range of 2,000 to 4,000 metric tons per year of recovered maleic anhydride or about 50 to 100 times that potentially recoverable from the selected waste stream.

On the basis of the analysis of the problem and review of the current technology, controlled incineration of this waste stream would seem to represent the best method for disposal of these wastes at this time.

Benefits. Incineration is based upon commercially proven technology, capable of complete oxidation of the hazardous wastes to nontoxic combustion products, and as such, capable of adequately safeguarding the environment.

Cost Analysis. For the economic cost analysis for controlled incineration of this waste refer to the incineration study of this report.

REFERENCES

1. TRW Systems Group. Assessment of Industrial Hazardous Waste Practices: Organic Chemicals, Pesticides and Explosives Industries, Environmental Protection Publication, Report SW-118C, 1976.

2. Mark, H. F., J. J. McKetta, D. F. Othmer, and A. Standen. Kirk-Othmer Encyclopedia of Chemical Technology, 2nd Ed. New York. Interscience Publishers, John Wiley and Sons, 1967.

3. Petrochemical Handbook Processes. Hydrocarbon Processing, 54: (11): 158-160, November 1975.

4. Weyens, Ernest. Recover Maleic Anhydride. Hydrocarbon Processing, November 1974.

5. Arthur D. Little, Inc., Interoffice Memorandum, Warren J. Lyman, Case: 79493-02, September 24, 1976.

6. Wirth, Friedrich. Recover Maleic Anhydride from Phthalic Anhydrode Scrubber Water. Hydrocarbon Processing, August 1975.

7. TRW Systems Group. Recommended Methods of Reduction, Neutralization, Recovery, or Disposal of Hazardous Waste. Volume II, Toxicology Summary. Environmental Protection Agency Report No. EPA-670/2-73-053-b. August 1973.

Lead Sludge From Settling Basin - Lead Alkyls Manufacture

Waste Stream No. 10

Waste Stream Description. Tetraethyl lead, used almost exclusively as an "anti-knock" additive with gasoline, is produced by the reaction of a lead-sodium alloy with ethyl chloride. See Figure 5-16. The reaction is as follows:

$$4C_2H_5Cl + 4PbNa \longrightarrow 3Pb + 4NaCl + Pb(C_2H_5)_4$$

The tetraethyl lead produced is distilled off and decanted. The still bottoms are washed and the wash water sent to a sludge pit. The overflow from the sludge pit is treated with sodium carbonate and ozone to remove the remaining lead. This precipitate contains about 0.1 Kg of lead precipitate per Kg of tetraethyl lead produced. Because of its lead content, this precipitate, amounting to 30,000 metric tons per year for a typical 60,000 metric ton per year T.E.L. plant, is potentially hazardous.[1]

Existing Treatment Methods. The present method of disposal for the sludge from the settling basin of lead alkyls production is dewatering followed by incineration. This incineration is performed in either the main lead recovery furnace or in a separate furnace designated for the settling basin sludge. In either case there are, at present, no air pollution emission controls on the furnaces leading to uncontrolled lead particulate emissions.

Selected Alternative Treatment Process. To successfully treat the lead sludge from the settling basin of lead alkyls manufacture, the following treatment sequence, (Figure 5-17) is proposed:

(1) Filtration; (2) Reduction of the liquid stream with sodium borohydride ($NaBH_4$); (3) Filtration; (4) Calcination of the solids with air emissions control.

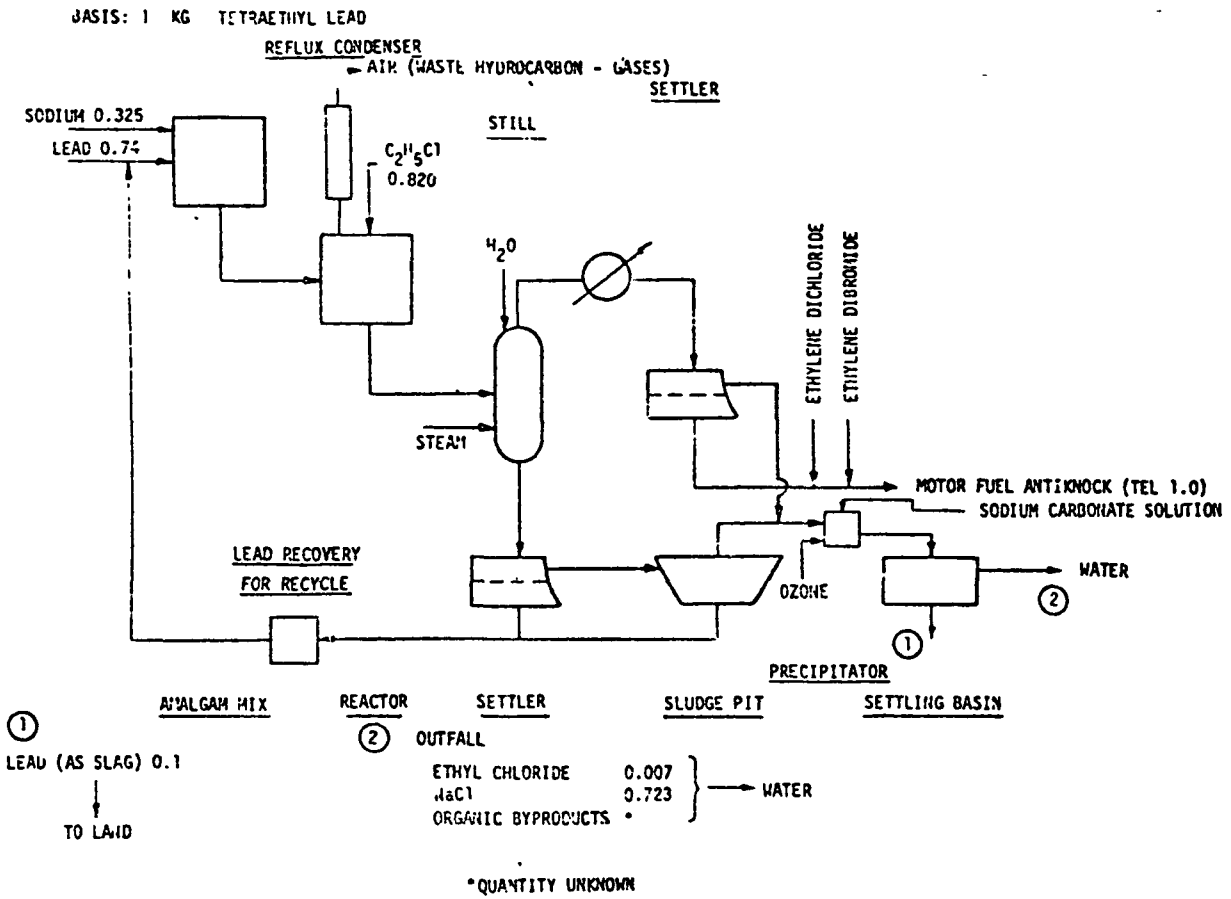

LEAD SLUDGE FROM SETTLING BASIN, (1)

WASTE STREAM NO. 10

FIGURE 5-16 LEAD ALKYLS MANUFACTURE

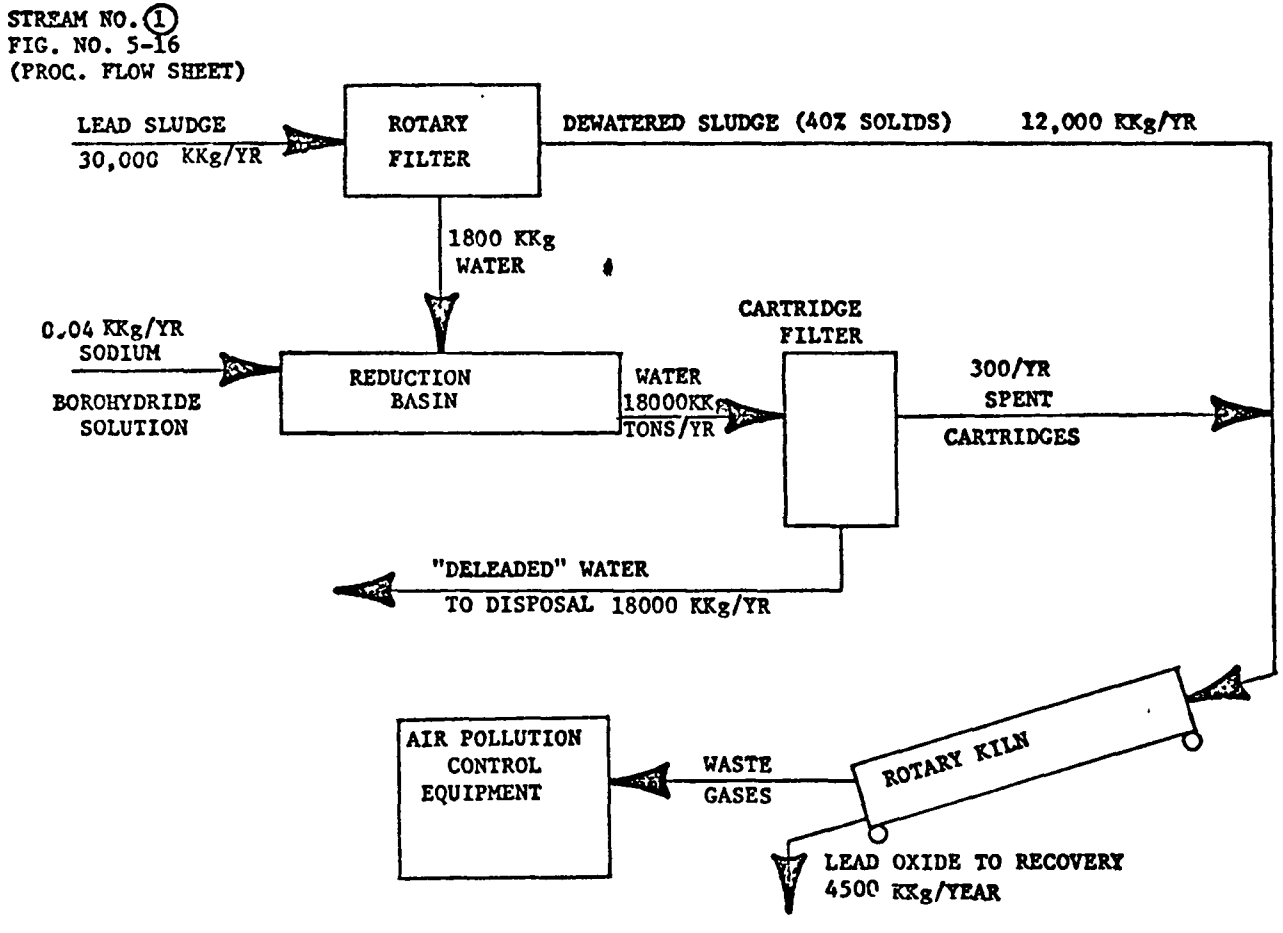

LEAD SLUDGE FROM SETTLING BASIN - LEAD ALKYLS MANUFACTURE

WASTE STREAM NO. 10

FIGURE NO. 5-17

Since the settling basin sludge is reported to contain 24,000 metric tons per year of water, sodium chloride, and sodium bicarbonate, combined with 6,000 metric tons per year of lead carbonate, lead hydroxide, various organic lead compounds, and other organics it is first necessary to reduce its volume for ease of treatment. This is accomplished by dewatering the sludge using a rotary vacuum filter consisting of a perforated cylinder wrapped with a continuous belt of fabric. The drum rotates with either a part of the drum submerged in a trough of the liquid to be filtered or with spray nozzles to "pour the liquid onto the drum". A vacuum is applied to the interior of the cylinder, forcing the liquid through the filter medium while leading wet solids adhering to the exterior. The filtrate is collected from the interior of the drum through a vacuum connection and a blade scrapes the solids into a collection hopper.

The use of rotary vacuum filtration should produce a 40 percent solids stream which, for a 60,000 metric tons per year lead alkyl plant, is 12,000 metric tons per year, and a filtrate of 15,000 metric tons per year. The filtrate is next treated with sodium borohydride in order to reduce any trace lead compounds which still might be in solution.[3] Chemical reduction of lead with sodium borohydride is an oxidation - reduction reaction where the oxidation state of lead changes from Pb^{+2} to Pb^{o} (elemental form) (lead is reduced) and the borohydride changes from BH_4^- to $B(OH)_4^-$ (boron is oxidized). The reaction is:

$$4Pb^{+2} + BH_4^- + 8OH^- = 4Pb + B(OH)_4^- + 4H_2O$$

Since sodium borohydride hydrolyzes at pH 8 or lower the solution pH should be adjusted to a preferred range of pH 8-11.

This pH adjustment is accomplished, if necessary, by addition of sodium carbonate. After allowing sufficient reaction time for the sodium borohydride to reduce any lead in solution (usually about 8 hours), the solution is filtered. Due to the small particle size of the lead and its relatively low concentration, a cartridge type filter is utilized. In this type of filtration the filter element is in the form of a tube. Liquid flows through the filter medium and solids are entrapped and built up on and within the cartridge. This type of filter is "renewed" by either of two techniques, backwashing or replacement. Since it is expected that not more than approximately 0.5 kilogram per day of elemental lead will be reduced and filtered, it is easier and more enconomical to replace the cartridge rather than to install a backwashing system. The filtrate, having been cleared of all lead, may be disposed of by conventional methods. The filtered solids from the rotary vacuum filter plus the spent filter cartridges are calcined to recover the lead. Calcination utilizes elevated temperatures for thermal decomposition of liquids and sludges into solid materials without any interaction with the gaseous phase as would occur in incineration[3]. Since the emission from calcined material (lead) is still toxic, air emission control equipment would also be required.

A rotary kiln calciner is best suited for decomposing of the lead sludge and spent cartridge filters. The rotary kiln utilizes a refractory lined tube that is inclined towards the flame. The feed is introduced at the

high side of the tube and flows towards the combustion source. The hot gases from the flame heat the tube and also calcine the material. The tube is continuously rotated, and the presence of flights and lengths of chain within the tube serve to increase the gas to material and tube to material contact, and the degree of turbulence. The material being calcined travels down the tube being exposed to constantly increasing temperatures and finally exits at the low end of the kiln, near the flame. In the calciner, as far as this waste stream is concerned, several processes take place. First, the water content of the filtered sludge is evaporated (estimated at 9,000 metric tons per year); second, the spent filter cartridge and the organics in the sludge are combusted; and third, the lead carbonates, hydroxides, and organics are converted to lead oxide. This recovered lead oxide is combined with that from the lead alkyl process lead recovery furnace and recycled. It is estimated that the recovered lead oxide amounts to approximately 4,500 metric tons per year with a value of 1.9 million dollars.

The toxic nature of lead containing emissions necessitates the inclusion of air pollution control equipment. This equipment might consist of a cyclone to remove the bulk of the particles and an electrostatic precipitator for the final cleanup to ensure no lead emissions to the atmosphere.

Benefits, Environmental Advantages and Disadvantages. The benefits from the lead alkyl sludge treatment process are as follows.

(1) Recovery of almost 2 million dollars in lead oxide for recycle

(2) Elimination of any toxic lead emissions to the air, water, or land.

(3) Reduction in volume, by filtration, of the amount of the waste stream to be treated.

Careful consideration must be given to the design of the air pollution control equipment for the calciner.

Cost Analysis. The cost analysis is based on a plant producing 60,000 KKg per year of tetraethyl lead operating 24 hours per day and 300 days per year. A summary of capital cost, annual operating cost, and the cost impact for waste treatment follows.

WASTE STREAM NO. 10

1. ESTIMATED INSTALLED CAPITAL COST

BASIS: 100 KKg/Day of Lead Sludge

Equipment Item		Estimated Cost
Sludge Pump	210 Kg/min	$ 17,500
Rotary Filter	210 Kg/min	115,000
Filtrate Pump	105 Kg/min	10,250
Reduction Basin	50,000 ℓ	44,000
Borohydride Pump	2 ℓ/hr	7,750
Filtrate Pump	105 Kg/min	10,250
Cartridge Filter	105 ℓ/m	8,000
Calciner	6250 Kg/hr	58,500
Cyclone	1100 M^3/min	124,000
Electrostatic Precipitator	1100 M^3/min	347,000
(2) Fans	@1100 M^3/min ea.	25,000
Subtotal		$ 767,000
Engineering at 10%		76,700
Contingency including freight at 20%		153,400
Total Estimated Installed Capital Cost		$ 997,100

WASTE STREAM NO. 10

2. ANNUAL FIXED CHARGES

Depreciation $997,100 @ 10%/year		$ 99,700
Interest $997,100 @ 10%/year		99,700
Insurance and Taxes $997,100 @ 4%/year		39,900
Total Annual Fixed Charges		$ 239,300

3. DIRECT OPERATING COST

Raw Material		
Utilities	$138,000	
Maintenance 0.04 x 997,100 =	39,900	
Direct Labor 4,270 MH x 9.00 x 1.5 =	57,600	
Annual Direct Operating Cost		$ 235,500
Annual Disposal Cost, Scrubber Sludges		Insignificant
Total Annual Cost		$ 474,800
Recovered Materials: Pb_3O_4 - 4500 KKg @ $600/KKg x 0.7		-1,890,000
Net Total Annual Cost		$ -1,415,200

4. COST PER KKg PRODUCT $ -1,415,200 ÷ 60,000 $ -24.

5. COST PER KKg WASTE $ -1,415,200 ÷ 30,000 $ -47.

6. IMPACT ON PRODUCT COST

(Market value of 1 KKg product = $1,440)

Cost /KKg ÷ market value/KKg = $ -23.59 ÷ $1440 $ - 1.64%

REFERENCES

1. TRW Systems Group. Assessment of Industrial Hazardous Waste Practices: Organic Chemicals Pesticides and Explosives Industries. Environmental Protection Publication Report SW-118C, 1976.

2. Arthur D. Little, Inc., Analysis of Potential Application of Physical and Biological Treatment Techniques to Hazardous Waste Management, Cambridge, Mass. E.P.A. Contract No. 68-01-3554, Filtration Section, Page 12.

3. Arthur D. Little, Inc., Analysis of Potential Application of Physical, Chemical and Biological Treatment Techniques to Hazardous Waste Management, Cambridge, Mass. E.P.A. Contract No. 68-01-3554, Calcination Section, Page 2.

Triethanolamine Column Heavies - Ethanolamines Manufacture

Waste Stream No. 11

1. Waste Stream Description.[1,2] Ethanolamines are generally made by reacting ethylene oxide and excess ammonia. Yields are generally of the order of 80 percent, based on ethylene oxide conversion to ethanolamines. The reaction is exothermic and is usually carried out at temperatures of 50-100C under pressures of 150-300 psi. The ratio of monoethanolamine, diethanolamine, and triethanolamine is dependent upon the ratio of the reactants present. The reactions taking place concurrently are:

$$\underset{\diagdown O \diagup}{CH_2 - CH_2} + NH_3 \longrightarrow NH_2CH_2CH_2OH \quad \text{MEA}$$

$$\underset{\diagdown O \diagup}{CH_2 - CH_2} + NH_2CH_2CH_2OH \longrightarrow NH(CH_2CH_2OH)_2 \quad \text{DEA}$$

$$\underset{\diagdown O \diagup}{CH_2 - CH_2} + NH(CH_2CH_2OH)_2 \longrightarrow N(CH_2CH_2OH)_3 \quad \text{TEA}$$

A typical plant flow diagram is presented in Figure No. 5-18. The ethanolamines are recovered from the bottoms of the ammonia stripper by evaporation of the water followed by dehydration in a drying column. The dried ethanolamines are fractionated in a train of stills to produce recycle amines, product MEA, DEA, and TEA and some high boiling distillation residues. The rejected distillation residues from the TEA column are estimated to be 0.08 Kg per Kg of product and contain equal amounts of TEA and tars of unknown composition. For a typical plant size of 14,000 metric tons per year the residues will amount to 1,120 metric tons of tars and TEA.

BASIS: 1 KG ETHANOLAMINES

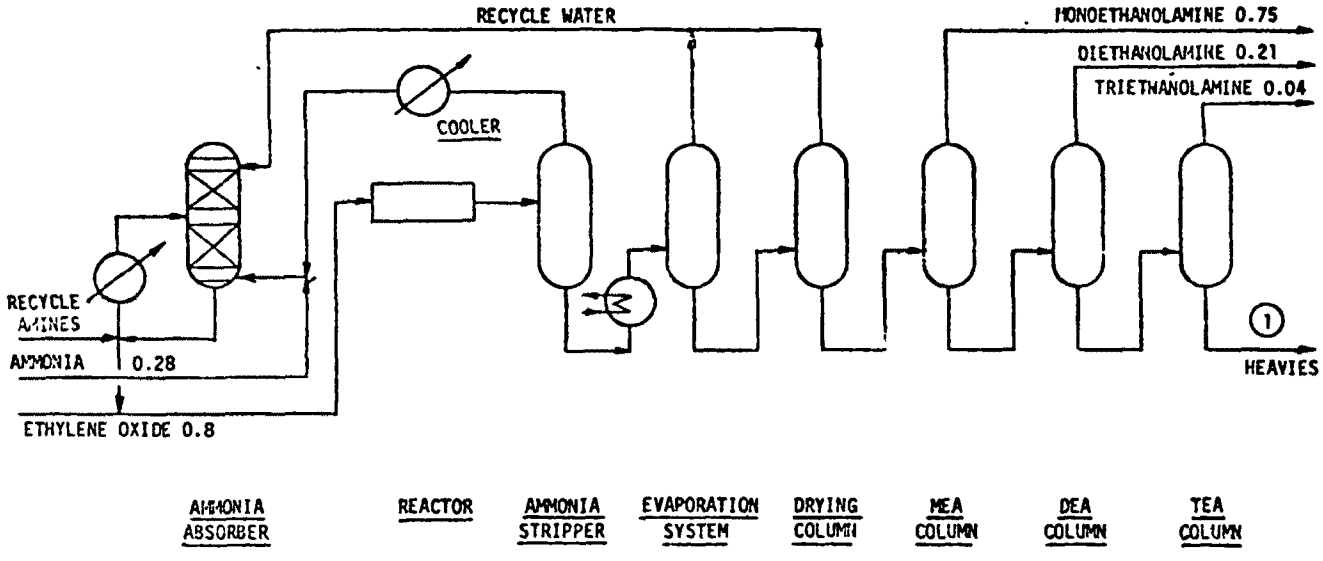

1

HEAVIES FROM TEA COLUMN

TRIETHANOLAMINE 0.04
TARS 0.04

↓

LAND

TRIETHANOLAMINE COLUMN HEAVIES, 1

WASTE STREAM NO. 11

FIGURE 5-18 ETHANOLAMINES MANUFACTURE

2. Existing Treatment Methods. The current means of disposal of the TEA residues is landfill. Because of the potentially hazardous amine and tar components in the waste, the landfill area must be lined with an impermeable membrane and sealed to prevent leaching of the contained material to the environment.

3. Selected Alternative Treatment Process. The processes selected include centrifugation or decantation, distillation, and landfill or incineration. Flow Sheet Figure No. 5-19 shows the recovery process with centrifugation as one of the options (Train I) and its alternative of decantation shown dotted (Train II). All other operations in Train II would remain identical with Train I. Train I stepwise operations are as follows: (1) slurry the heavies in hot water. It is assumed that the tar is insoluble in aqueous, whereas the TEA is infinitely soluble; (2) centrifuge the resultant slurry to separate the tar and aqueous layers, with the tar residue sent to chemical land disposal, which will be an integral part of this process and tonnage wise will be the same as the total waste stream; (3) feed the aqueous stream (which contains the TEA) into the existing drying column and train of stills to recover the dissolved TEA. In the event that the drying column is already operating at capacity, a drying column specifically for this aqueous TEA stream would be installed, with the column bottoms fed to the existing TEA finishing column. The above procedure will need to be laboratory and pilot tested to verify the following: (1) that the tars in the heavies are insoluble in water and will not form an inseparable

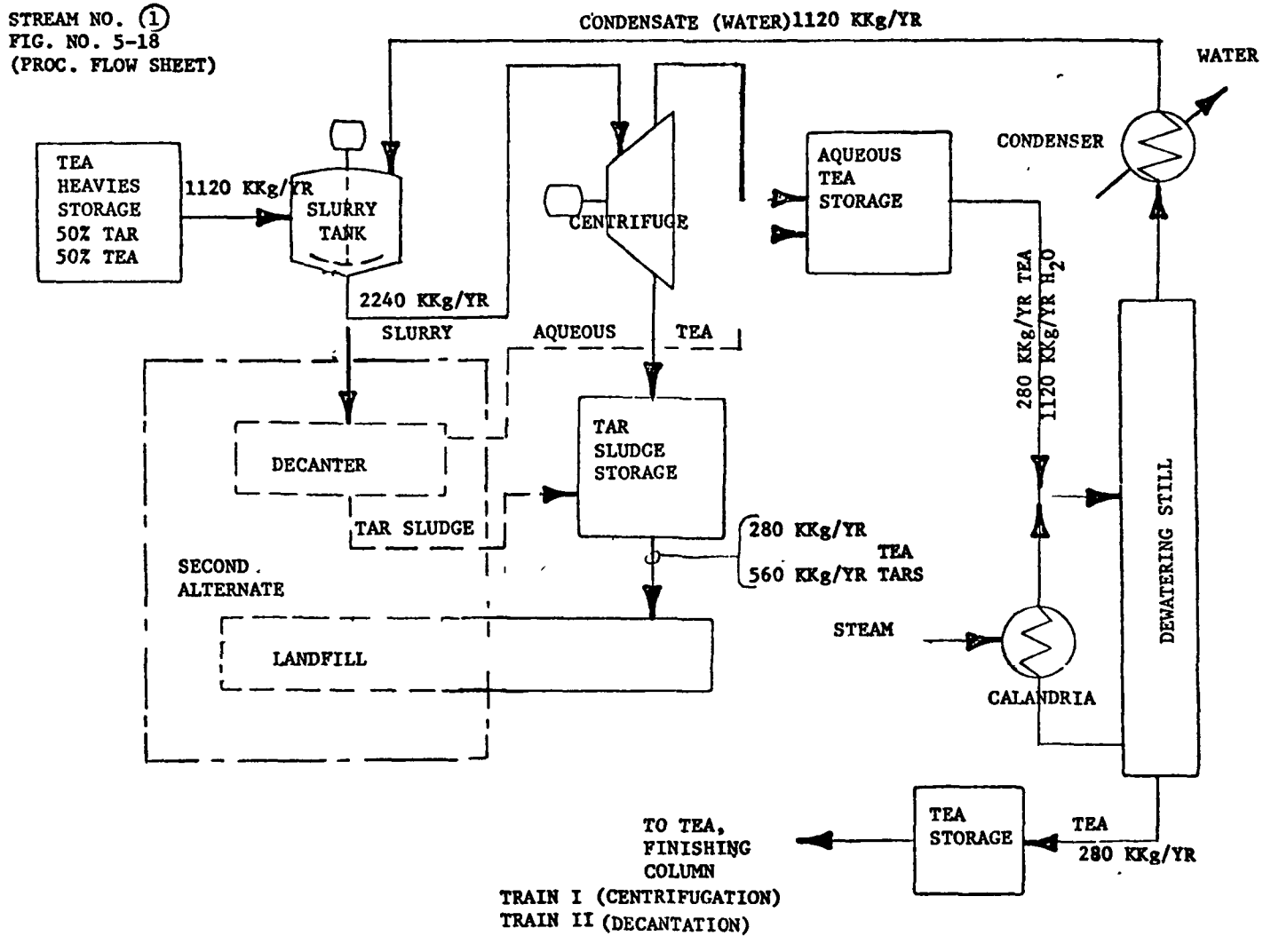

TRIETHANOLAMINES COLUMN HEAVIES - ETHANOLAMINES MANUFACTURE

WASTE STREAM NO. 11

FIGURE NO. 5-19

mixture when the heavies are slurried with water; (2) that when centrifuged, the slurry will release a minimum of 50 percent of its contained TEA; (3) whether decantation could be substituted for centrifugation; (4) that when reprocessed, the recovered TEA will be of marketable purity.

4. Benefits and Environmental Advantages. The described process using Trains I or II will recover (if confirmed by laboratory and pilot plant study) 50 percent of the available resource material in the TEA heavy ends stream as a marketable commodity. With the substitution of Train II for Train I, a small energy saving would also be realized. Any combination of controlled incineration chemical landfill and resource recovery would be environmentally acceptable.

Cost Analysis. The cost analysis is based on a plant producing 14,000 KKg per year of ethanolamines operating 24 hours per day and 300 days per year. A summary of capital cost, annual operating cost, and the cost impact for waste treatment follows.

WASTE STREAM NO. 11

TRAIN I

1. ESTIMATED INSTALLED CAPITAL COST

BASIS: 3.73 KKg/Day of TEA Heavies

Equipment Item		Estimated Cost
Centrifuge - Automatic	1.22 M dia x 0.76 M	$ 233,600
Dewatering Still	46 cm dia x 6 m	54,300
Calandria	1.67 Sq M	15,800
Condenser	1.67 Sq M	11,700
Slurry Tank w/Agitator	380 ℓ	38,000
Still feed Pump	3.8 ℓ/min	12,400
Condensate Pump	2.3 ℓ/min	6,600
Centrifuge Feed Pump	4.5 ℓ/min	13,100
Finish Column Feed Pump	1 ℓ/min	12,400
Heavies Pump	1 ℓ/min	12,400
Sludge Pump to Storage	3.8 ℓ/min	12,400
Sludge Pump to landfill	3.8 ℓ/min	12,400
Heavies Storage Tank	50,000 ℓ	29,200
Sludge Storage Tank	38,000 ℓ	21,900
Aqueous TEA Storage Tank	25,000 ℓ	21,900
Dehydrated TEA Storage Tank	13,300 ℓ	21,900
Subtotal		$ 530,000
Engineering @ 10%		53,000
Contigency including freight @ 20%		106,000
Total		$ 689,000

WASTE STREAM NO. 11

TRAIN I Continued

2. ANNUAL FIXED CHARGES

Depreciation	$ 689,000 @ 10%/year	$ 68,900
Interest	$ 689,000 @ 10%/year	68,900
Insurance and Taxes	$ 689,000 @ 4%/year	27,600
Total Annual Fixed Charges		$ 165,400

3. DIRECT OPERATING COST

Raw Material		
Utilities	$ 33,600	
Maintenance 689,000 x 0.04	27,600	
Direct Labor 4325 MH x 9.00 x 1.5	58,400	
Annual Direct Operating Cost		$ 119,600
Annual Disposal Cost Land Fill		86,500
Total Annual Cost		$ 371,500
Recovered Materials: Triethanolamine 280.8 KKg x $816/KKg x 0.7		-160,400
Net Total Annual Cost		$ 211,100

4. COST PER KKg PRODUCT $211,100 ÷ 14,000 $ 15.

5. COST PER KKg WASTE $211,100 ÷ 1120 $ 188.

6. IMPACT ON PRODUCT COST

(Market value of 1 KKg product = $790)

Cost/KKg ÷ market value/KKg = $15.08 ÷ $790 1.91%

WASTE STREAM NO. 11

TRAIN II

1. ESTIMATED INSTALLED CAPITAL COST

BASIS: 3.73 KKg/Day of TEA Heavies

Equipment Item		Estimated Cost
Decanter		$ 58,400
Dewatering Still	46 cm dia x 12.2 m	54,300
Calandria	1.67 Sq M	15,800
Condenser	1.67 Sq M	11,800
Slurry Tank w/Agitator	380 ℓ	11,700
Still Feed Pump	3.8 ℓ/m	12,400
Condensate Pump	2.3 ℓ/m	6,600
Centrifuge Pump	4.5 ℓ/m	13,100
Finish Column Feed Pump	1 ℓ/m	12,400
Heavies Pump	1 ℓ/m	12,400
Sludge Pump to Storage	3.8 ℓ/m	12,400
Sludge Pump to Landfill	3.8 ℓ/m	12,400
Heavies Storage Tank	50,000 ℓ	29,200
Sludge Storage Tank	38,000 ℓ	21,900
Aqueous TEA Storage Tank	25,000 ℓ	21,900
Dehydrated TEA Storage Tank	13,300 ℓ	21,900
Subtotal		$354,800
Engineering @ 10%		35,500
Contingency including freight @ 20%		71,000
Total		$461,300

WASTE STREAM NO. 11
TRAIN II Continued

2. ANNUAL FIXED CHARGES

Depreciation	$ 461,300 @ 10%/year	$ 46,100
Interest	$ 461,300 @ 10%/year	46,100
Insurance and Taxes	$ 461,300 @ 4%/year	18,500
Total Annual Fixed Charges		$110,700

3. DIRECT OPERATING COST

Raw Material			
Utilities		$ 30,100	
Maintenance	0.04 x 461,300	18,500	
Direct Labor 4325 MH x 9.00 x 1.5		58,400	
Annual Direct Operating Cost			$107,000
Annual Disposal Cost	Land Fill		86,500
Total Annual Cost			$304,200
Recovered Materials: Triethanolamine	280.8 KKg x $816/KKg x 0.7		-160,400
Net Total Annual Cost			$ 143,800

4. COST PER KKg PRODUCT $143,800 ÷ 14,000 = $ 10.

5. COST PER KKg WASTE $143,800 ÷ 1,120 $ 128.

6. IMPACT ON PRODUCT COST

(Market value of 1 KKg product = $790)

Cost/KKg ÷ Market value/KKg = $10.27 ÷$790 1.30%

REFERENCES

1. TRW Systems Group. Assessment of Industrial Hazardous Waste Practices: Organic Chemicals Pesticides and Explosives Industries. Environmental Protection Publication Report SW-118C, 1976.

2. Mark, H. F., J. J. McKetta, O. F. Othmer and A. Stamden. Kirk-Othmer Encyclopedia of Chemical Technology. Second Edition. New York Interscience Publishers, John Wiley and Sons. 1965. Volume E.

3. Icarus Corporation. Capital and Operating Costs of Pollution Control Equipment Modules. Silver Spring. Environmental Protection Publication EPA-RS-73-023b. 1973.

4. Personal Communication. E. P. Crumpler, EPA, to J. M. Genser, Processes Research, Inc., October 14, 1976.

Still Bottoms from Stripping Column - Furfural Manufacture

Waste Stream No. 12

Waste Stream Description. One of the waste streams produced during the manufacture of furfural is the still bottoms from the stripping column.

The manufacture of furfural is based on the following reactions:[1]

$$\text{pentosan} + \text{water} \rightarrow \text{pentose}$$

$$\text{pentose} \rightarrow \text{furfural} + \text{water}$$

Commercially, furfural is produced in a single-step operation. See Figure 5-20. The raw material is charged to large rotary digesters and treated with dilute sulfuric acid. The furfural formed is removed by steam distillation. The vapors leaving the digesters are condensed and fed to a stripping column. Overhead vapors, rich in furfural, are condensed and cooled, separating into two layers. After removal of a small quantity of low-boiling heads in a methanol column, the water layer is returned to the stripping column for recovery of furfural. The furfural layer, containing about 6 percent water, is sent to the dehydrating column, where the water is taken overhead, and dry furfural is drawn from the base. Distillate from the dehydrating column is sent to the stripping column decanter for recycling through the system. Regardless of the process used, the controlling factors of the digestion step are the liquid-solid ratio, time, temperature, and acid concentration.

In 1974, a typical furfural plant size was 35,000 metric tons per year, with the still bottoms waste stream being about 19,600 metric tons per year.

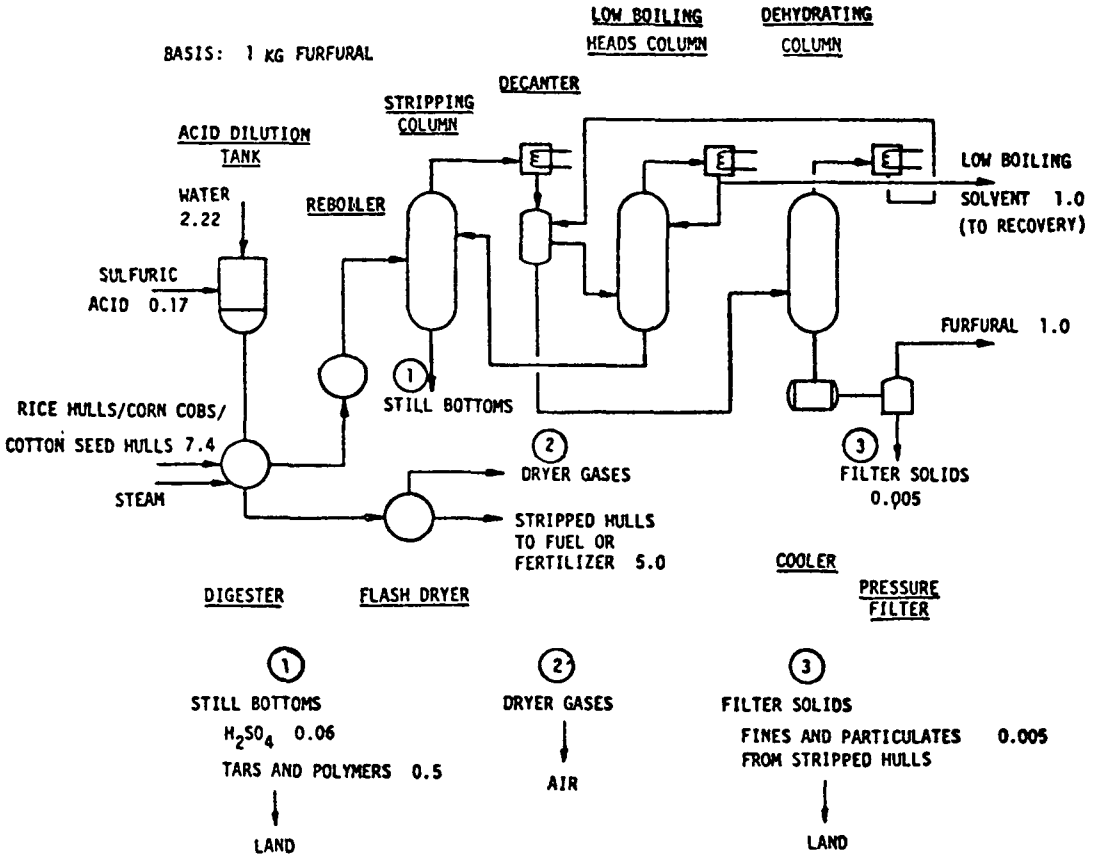

STILL BOTTOMS FROM STRIPPING COLUMN, (1) Filter Solids, (3)

WASTE STREAMS NO. 12 AND 13

FIGURE 5-20 FURFURAL MANUFACTURE

Existing Treatment Methods. Present technology calls for landfilling of the stripping column still bottoms. The presence of sulfuric acid, and tars and polymers composed of furfural-related compounds creates a potential problem due to the possible exfiltration of these toxic materials from the land disposal site.

Selected Alternative Treatment Process. To successfully treat the stripping still bottoms from furfural manufacture, it is necessary to separate and/or detoxify the hazardous components therein. Treatment scheme selected consists of sedimentation followed by hydrolysis and by composting. See Figure No. 5-21.

The stripping column bottoms are composed of approximately 89 percent polymers and tars and 11 percent sulfuric acid. In order to perform a preliminary recovery-detoxification of the waste stream, a heated sedimentation tank is used. This will allow the polymers and tars to settle out and much of the sulfuric acid stream to be withdrawn from top of the unit. If 50 percent of the sulfuric acid can be reclaimed in this way, this will result in a recovery of 1,050 metric tons of acid, equivalent to $30,000 worth of new purchased acid.

The bottoms stream from the sedimentation unit, consisting of about 94 percent polymers and 6 percent sulfuric acid, is next transferred to the hydrolysis unit. In this agitated vessel a lime and/or limestone slurry is gradually added to the tar, polymer, sulfuric acid mixture. The purpose of this addition is to neutralize the sulfuric acid (forming calcium sulfate) and to convert the tars and some of the polymers to furfural type alcohols, calcium furoates, and other related compounds.[1]

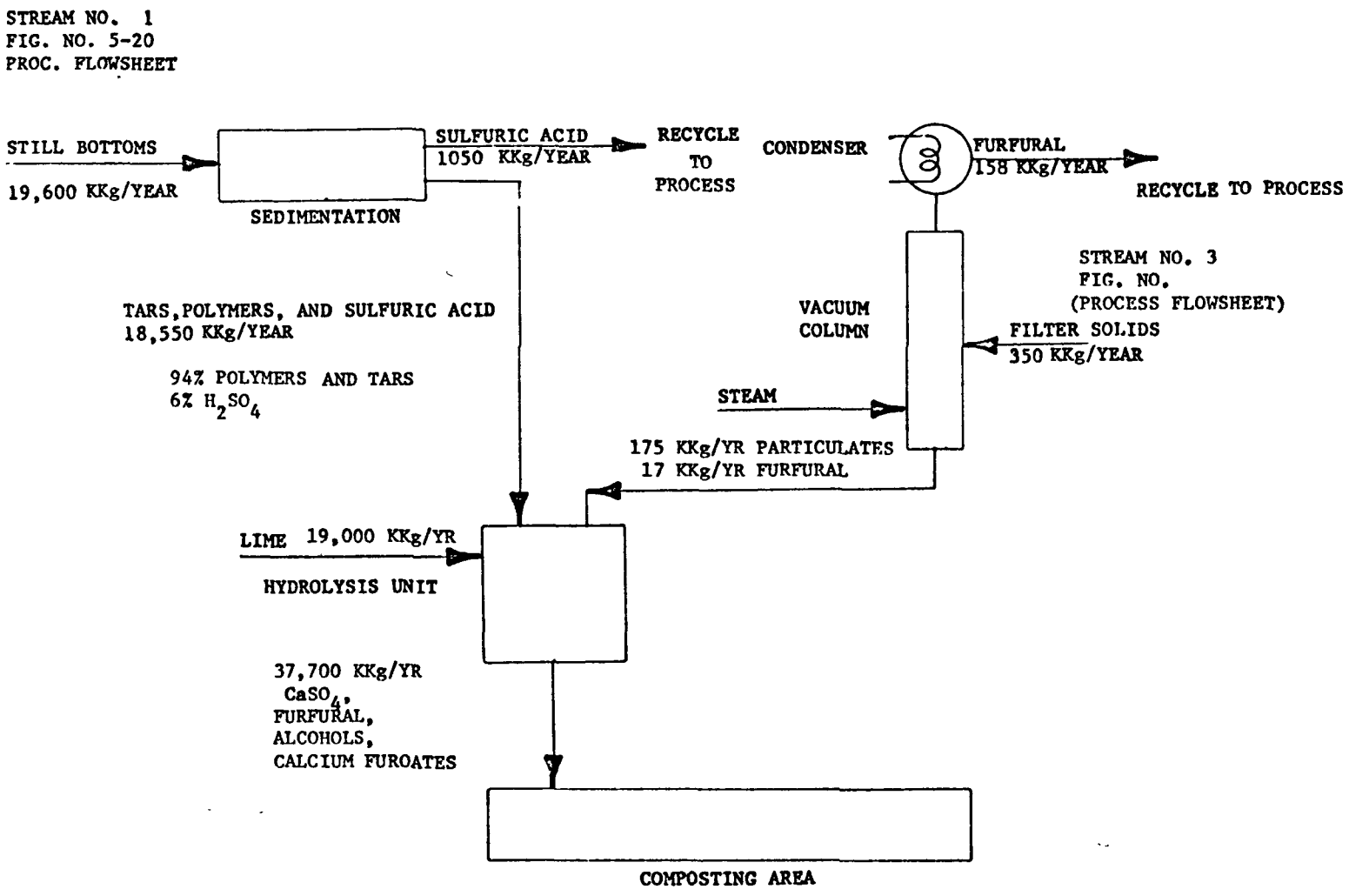

FURFURAL MANUFACTURE-STILL BOTTOMS AND FILTER SOLIDS
WASTE STREAM NO. 12-13
FIGURE NO. 5-21

After hydrolysis, the material is transferred, along with additional lime and/or limestone, to compost piles for final treatment. The lime/limestone is necessary in order to assure that the pH of the wastes remain in the neutral to alkaline range. "Composting" provides a means of achieving high-rate aerobic digestion of organics by mesophillic and thermophillic microorganisms. It is the only biological treatment process which is relatively insensitive to toxicants.[2]

Benefits and Environmental Advantages and Disadvantages. The elimination of landfill as the current method of disposal for an untreated hazardous waste is a significant benefit. Also, recovery of over 1,000 metric tons of sulfuric acid for reuse in the process, provides a savings of about $30,000 in fresh acid costs and a reduction of 5 percent in stream volume.

The environmental disadvantage of the treatment process is that composting still requires the use of land for the disposal of the wastes. Even though the stream volume has been slightly reduced, and the wastes detoxified, the final disposal, a biological reduction, is accomplished by a process whose costs are high compared to other biological treatment systems. There also exists the danger of leakage from the compost system of furfural type compounds into the surrounding earth and groundwater, before decomposition is complete.

Basis for Estimating Composting

Application Rates: (1) Aqueous. 7×10^5 liters per hectare per month (derived from ADL study). (2) Solid Waste. 2 KKg per hectare per month (based on land disposal of municipal sludges).

Retention Time. 3 to 4 months (based on ADL studies for degradation of organic waste).

Compost Cost. $.0079 per liter or $.0077 per Kg. (Derived from ADL study).

Leachate Cost. $1.32 per 1,000 liters or $1.30 per KKg (derived from ADL study).

Combined Composting and Leachate Cost: $9.22 per 1,000 liters or $9.00 per KKg including material and labor.

Cost Analysis. The cost analysis is based on a plant producing 35,000 KKg per year of furfural operating 24 hours per day and 300 days per year. A summary of capital cost, annual operating cost and the cost impact for waste treatment is given on the following pages.

WASTE STREAM NO. 12

1. ESTIMATED INSTALLED CAPITAL COST

BASIS: 66.5 KKg/Day of Still Bottoms and Filter Solids

Equipment Item		Estimated Cost
Sedimentation Unit	72,000 ℓ/day	$ 14,600
Acid Pump	3 ℓ/min	6,200
Hydrolysis Unit	12,000 ℓ	68,600
Sludge Pump	40 ℓ/min	15,200
Vacuum Column	60 cm dia	60,000
Vacuum Pump	3 M^3/min	35,000
Condenser	35 M^2	30,000
Furfural Pump	40 ℓ/min	6,600

Composting Land Not Included

Subtotal	$ 236,200
Engineering @ 10%	23,600
Contingency including freight @ 20%	47,200
Total	$ 307,000

WASTE STREAM NO. 12

2. ANNUAL FIXED CHARGES

Depreciation $307,000 @ 10%/year		$ 30,700
Interest 307,000 @ 10%/year		30,700
Insurance and Taxes $307,000 @ 4%/year		12,300
Total Annual Fixed Charges		$ 73,700

3. DIRECT OPERATING COST

Raw Material Lime 19,000 KKg @ 27.50	$ 522,500	
Utilities	7,400	
Maintenance 0.04 x 307,000	12,300	
Direct Labor 14,560 MH x 9.0 x 1.5	196,600	
Annual Direct Operating Cost		$ 738,800
Annual Disposal Cost Composting and leachate 37,700 KKg x 9.0 per KKg		339,300
Total Annual Cost		$ 1,151,800
Recovered Materials Sulfuric Acid 1050 KKg x $44 x 0.7 Furfural 158 KKg x $1,035 x 0.7		-146,800
Net Total Annual Cost		1,005,000

4. COST PER KKg PRODUCT $ 1,005,000 ÷ 35,000 $ 28.

5. COST PER KKg WASTE $ 1,005,000 ÷ 19,950 $ 50.

6. IMPACT ON PRODUCT COST

(Market value of 1 KKg product = $1035)

Cost/KKg ÷ Market value/KKg = $28.71 ÷ $1035 2.77%

REFERENCES

1. Mark, H. F., J. J. McKetta, D. F. Othmer, and A. Stamden. Kirk-Othmer Encyclopedia of Chemical Technology. 2nd Ed. New York. Interscience Publishers, John Wiley and Sons, 1966.

2. Arthur D. Little, Inc., Application of Physical, Chemical And Biological Treatment Techniques to Hazardous Waste Management. Cambridge, Mass. EPA Contract 68-01-3554, Composting Section, Page 1.

Filter Solids - Furfural Manufacture - Waste Stream No. 13

Waste Stream Description. In the production of furfural, the dehydrating column bottom stream, which is the product stream, is filtered. From the pressure filter, the product furfural is sent to storage and the waste stream, consisting of fines and particulates from stripped hulls is, at present, sent to land disposal at a rate of .005 kg/kg furfural produced. For details of the manufacture of furfural see Waste Stream 12 - Still Bottoms from Stripping Column - Furfural Manufacture.

Existing Treatment Methods. Present technology calls for landfilling of the wastes from the pressure filter. The presence of furfural in the filter solids classifies this as a potentially hazardous waste. Landfilling as a disposal method is unacceptable due to the possibility of furfural leaching into the ground outside the disposal site.

Selected Alternative Treatment Process. Since the filter solids from furfural manufacture contain furfural, estimated at 1 kg furfural to 1 kg filter solid fines, the first step in the alternative treatment process is vacuum distillation (or stripping as the case might be). A 90 percent recovery of furfural will amount to about 158 metric tons per year with a value of about $115,000. In this treatment step the accumulated fines and particulates with the entrained furfural are fed into a vacuum column. The pressure in the column is reduced to about 100 mm Hg pressure and low pressure steam injected into the bottom of the column. The combination of vacuum and steam will strip

an estimated 90 to 95 percent of the furfural from the column feed. The vapors from the still are condensed and recycled to the process decanter for recovery of the furfural.

The next processing steps for treatment of the filter solids are hydrolysis and composting of the hydrolyzed wastes. Since these wastes represent only a small fraction compared to the still bottom waste from the stripping column (Waste Stream 12), about 190 metric tons per year versus 18,500 tons per year, they may be combined at this point for hydrolysis and composting. For further details on the hydrolysis and composting treatment processes, and basis for estimating composting, see Waste Stream 12.

Benefits and Environmental Advantages and Disadvantages. In addition to the benefits, environmental advantages and disadvantages detailed under Waste Stream 12, this process has also the advantage of recovering approximately 158 metric tons of furfural worth $115,000 per year.

Cost Analysis. Costs for treatment and disposal of the filter solids from a 35,000 metric ton per year furfural plant, have been included in the cost analysis of Waste Stream 12 - Still Bottoms - Furfural Manufacture.

REFERENCES

1. Mark, H. F., J. J. McKetta, D. F. Othmer, and A. Stamden. Kirk-Othmer Encyclopedia of Chemical Technology. 2nd Ed. New York. Interscience Publishers, John Wiley and Sons, 1966.

2. Arthur D. Little, Inc., Application of Physical, Chemical and Biological Treatment Techniques to Hazardous Waste Management. Cambridge, Mass. EPA Contract 68-01-3554, Composting Section, Page 1.

Spent Reactor Catalyst - Fluorocarbon Manufacture - Waste Stream No. 14

Waste Stream Description. Twice a year the catalyst[1] in plants producing fluorocarbons is replaced and the spent catalyst sent to landfill. See Figure 5-22. A typical analysis[1,3] of the spent catalyst is as follows:

$SbCl_5$	77 percent
CCl_4	10 percent
CCl_3F	10 percent
Organics	3 percent

For a standard size plant, producing 80,000 metric tons per year of fluorocarbons,[1] the semiannual purge amounts to about nine metric tons as $SbCl_5$, with a replacement cost[4] of about $20,000.

The spent antimony pentachloride ($SbCl_5$) reacts with water[2] to produce SbOCl with the evolution of chlorine (Cl_2). Further reaction with water yields $Sb_4O_5Cl_2$ and more chlorine. The antimony oxychloride ($Sb_4O_5Cl_2$) is slightly soluble in water. The antimony ion is potentially hazardous. The provisional limits,[5] as Sb, are 0.004 ppm in air and 0.05 ppm in water.

Existing Treatment Methods. The spent catalyst is placed in drums and sent to land disposal. The waste is deemed potentially hazardous.

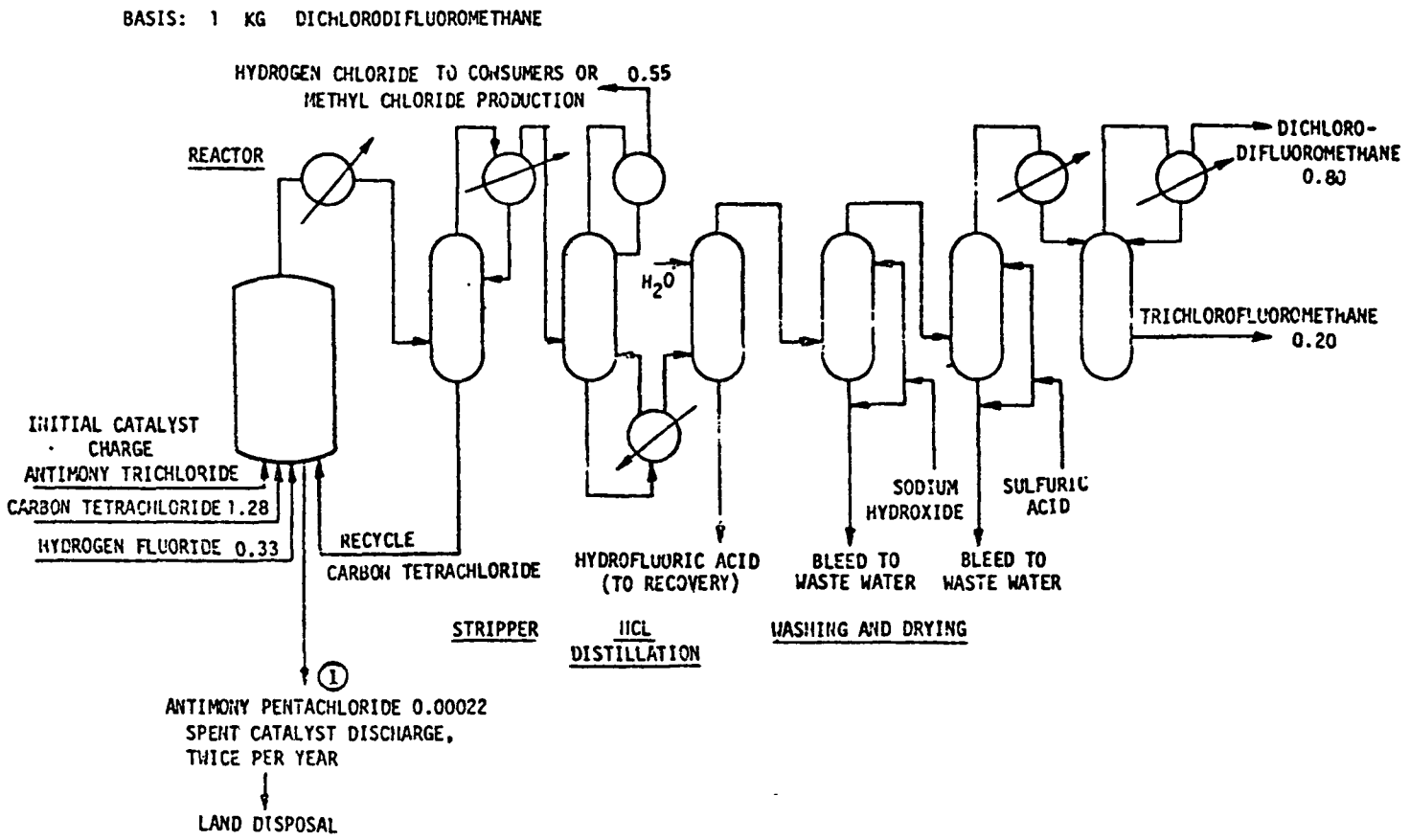

SPENT REACTOR CATALYST, 1

WASTE STREAM NO. 14

FIGURE 5-22 FLUOROCARBONS MANUFACTURE

Selected Alternative Treatment Processes. Seven alternatives for disposing of spent antimony pentachloride were considered, namely:

Treatment	Remarks
1. Dechlorination, filtration and rechlorination	Catalyst recycled
2. Distillation	Catalyst recycled
3. Calcination and rechlorination	Catalyst recycled, but high energy consumption
4. Iron precipitation	
5. Hydrogenation ——————→	Toxic product
6. Hydrolysis	
7. Sulfide precipitation	

Since the first two treatments, dechlorination and distillation, meet the criteria[6] of resource and energy conservation best, these two treatments designated Train 1 and Train 2 respectively, were studied in detail.

1. Train 1-Dechlorination. This treatment consists of dechlorinating antimony pentachloride in the presence of ethylene trichloride, precipitating antimony trichloride; $SbCl_5 + EtCl_3H \longrightarrow SbCl_3\downarrow + EtCl_5H$ After filtering off the $SbCl_3$, the antimony trichloride is chlorinated to $SbCl_5$; $SbCl_3 + Cl_2 \longrightarrow SbCl_5$ and returned to fluorocarbon manufacturing. The process is shown schematically in the flow diagram, Figure 5-23, and is discussed in further detail below.

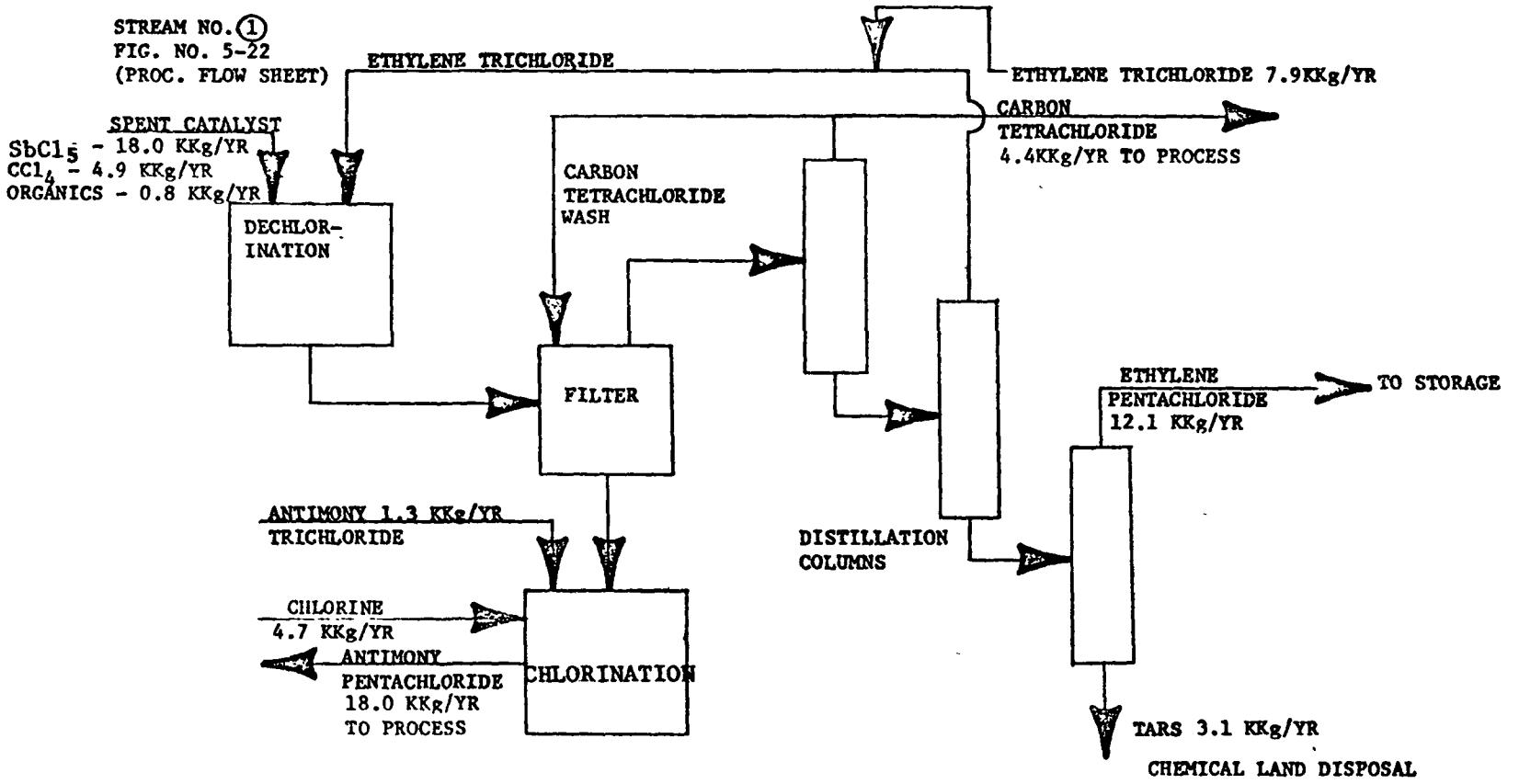

TRAIN I (DECHLORINATION)

SPENT REACTOR CATALYST FLUOROCARBON MANUFACTURE

WASTE STREAM NO. 14

FIGURE NO. 5-23

On a daily basis, about 80 kilograms of spent catalyst is reacted with about 50 kilograms of ethylene trichloride at 120C and atmospheric pressure for about 16 hours. The reactor mix is then filtered (1 hour). After washing the residue with carbon tetrachloride, the residue is sluiced into a chlorinating vessel with carbon tetrachloride, makeup antimony trichloride added and the antimony trichloride chlorinated to the pentachloride. The antimony pentachloride is then returned to fluorocarbon manufacturing.

The filtrate is pumped to a receiver and, over 4 hours, is separated by distillation into:

Carbon tetrachloride, CCl_4

Ethylene trichloride, $EtCl_3H$

Ethylene pentachloride, $EtCl_5H$

Still bottoms (chloride and fluoride tars)

The carbon tetrachloride is returned to the fluorocarbon process. The ethylene trichloride is recycled to the dechlorinator. The ethylene pentachloride is sold to the supplier of the ethylene trichloride. The still bottoms (about two kilograms per batch) are drummed and sent to landfill chemical land disposal.

2. Train 2-Distillation. This treatment tentatively consists of taking a side stream of the catalyst and, by distillation, separate it into these components:

Lights (mostly freons)

Carbon tetrachloride, CCl_4

Antimony pentachloride, $SbCl_5$

Still bottoms (chloride and fluoride tars)

As shown in the flow diagram, figure No. 5-24, the lights are sent back to the fluorocarbon manufacturing, along with the carbon tetrachloride. The antimony pentachloride is returned to the hydrofluorinator. The still bottoms are drummed and sent to chemical land disposal.

The distillation system would be automated and operated continuously.

Benefits and Environmental Advantages and Disadvantages. Both treatments, dechlorination and distillation, require bench scale verification and procurement of scale-up data. Since both treatment plants are relatively small, it is recommended that the bench equipment be scaled-up to the full size plant, without a pilot plant development step.

Environmentally, both treatments rate high [6] for these reasons:

1. Recovery of a resource.
2. Low energy input.
3. Reduction of waste volume (1/25).
4. Detoxification of wastes.

Cost Analysis. The cost analysis is based on a plant producing 80,000 KKg per year of fluorocarbons operating 24 hours per day and 300 days per year. A summary of capital cost, annual operating cost, and the cost impact for waste treatment follows.

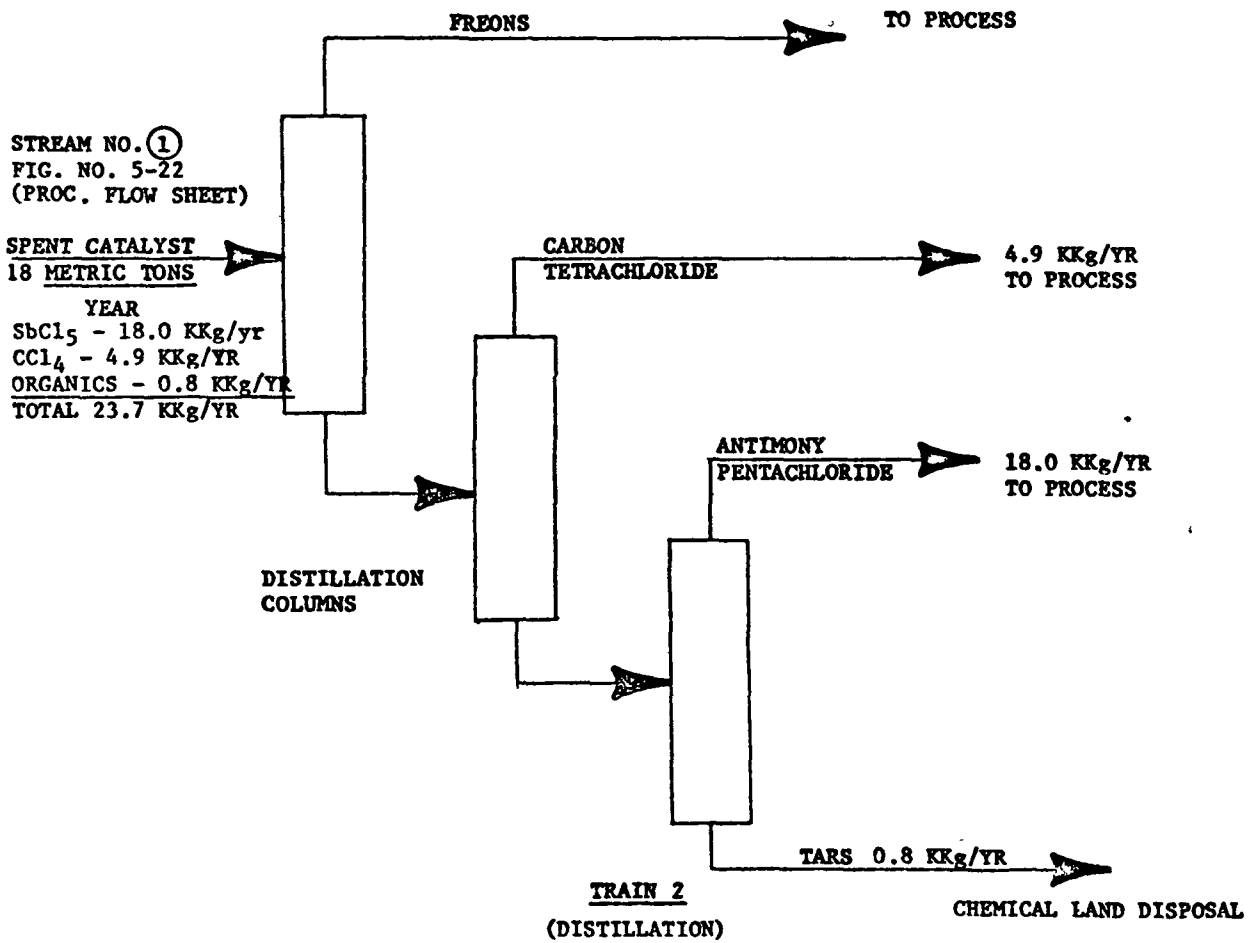

SPENT REACTOR CATALYST FLUOROCARBON MANUFACTURE

WASTE STREAM NO. 14

FIGURE NO. 5-24

WASTE STREAM NO. 14

TRAIN I

1. ESTIMATED INSTALLED CAPITAL COST

BASIS: 60 Kg/Day of Catalyst

Equipment Item	Size	Estimated Cost
Dechlorinator	100 ℓ	$ 29,200
Dechlorinator Condenser	1 Sq M	2,900
Antimony Trichloride Filter	1.1 Sq M	29,200
Chlorinator	100 ℓ	29,200
Carbon Tetrachloride Column	25 cm dia x 20 trays	32,100
Carbon Tetrachloride Condenser	1 Sq M	2,900
Carbon Tetrachloride Reboiler	1 Sq M	2,900
Ethylene Trichloride Column	25 cm dia x 20 trays	32,100
Ethylene Trichloride Condenser	1 Sq M	2,900
Ethylene Trichloride Reboiler	1 Sq M	2,900
Ethylene Pentachloride Column	25 cm dia x 20 trays	32,100
Ethylene Pentachloride Condenser	1 Sq M	2,900
Ethylene Pentachloride Reboiler	1 Sq M	2,900
Ethylene Trichloride Stg. Tank	19,000 ℓ	29,200
Distillation Feed Tank	380 ℓ	2,900
Ethylene Pentachloride Tank	19,000 ℓ	29,200
Nine Pumps	10 ℓ/Hr	7,900
Ethylene Trichloride Pump	190 ℓ/min	7,300

WASTE STREAM NO. 14

TRAIN I

1. ESTIMATED INSTALLED CAPITAL COST (CONTINUED)

BASIS: 60 Kg/Day of Catalyst

Equipment Item	Size	Estimated Cost
Distillation Feed Pump	10 ℓ/min	$ 900
Two Truck Stations		1,500
Subtotal		$ 283,100
Engineering @ 10%		28,300
Contingency including freight @ 20%		56,600
Total		$ 368,000

WASTE STREAM NO. 14

TRAIN I

2. ANNUAL FIXED CHARGES

Depreciation	$368,000 @ 10%/year	$ 36,800
Interest	$368,000 @ 10%/year	36,800
Insurance and Taxes	$368,000 @ 4%/year	14,700
Total Annual Fixed Charges		$ 88,300

3. DIRECT OPERATING COST

Raw Material Ethylene Trichloride 7.9 KKg @ $434.50 Chlorine 4.7 KKg @ $289 Antimony Trichloride 1.3 KKg @ $2310	$7,200	
Utilities	4,200	
Maintenance 0.04 x 368,000	14,700	
Direct Labor 1260 MH x 9.00 x 1.5	17,000	
Annual Direct Operating Cost		$ 43,100
Annual Disposal Cost		100
Total Annual Cost		$131,500
Recovered Materials: Carbon Tetrachloride 4.4 KKg @ $320 x .7-$1000 Ethylene Pentachloride 12.1 KKg @ $330 x .7-$2780 Antimony Pentachloride 18.0 KKg @ $2,200 x .7-$27,720		-31,500
Net Total Annual Cost		$ 100,000

4. COST PER KKg PRODUCT $ 100,000 ÷ 80,000 $ 1.25

5. COST PER KKg WASTE $ 100,000 ÷ 18 $ 5,556

6. IMPACT ON PRODUCT COST

(Market value of 1 KKg product = $1080)

Cost/KKg ÷ Market value/KKg = $1.25 ÷ $1080 0.12%

WASTE STREAM NO. 14

TRAIN II

1. ESTIMATED INSTALLED CAPITAL COST

BASIS: 60 Kg/Day of Catalyst

Equipment Item	Size	Estimated Cost
Stripping Column Associated Heat Exchangers & Pumps	15 cm dia-20 trays	$ 19,000
Carbon Tetrachloride Column Associated Heat Exchangers & Pumps	15 cm dia-20 trays	21,900
Antimony Pentachloride Column Associated Heat Exchangers & Pumps	15 cm dia-20 trays	21,900
Subtotal		$ 62,800
Engineering @ 10%		6,300
Contingency including freight @ 20%		12,600
Total		$ 81,700

WASTE STREAM NO. 14

TRAIN II

2. ANNUAL FIXED CHARGES

Depreciation $81,700 @ 10%/year		$ 8,170
Interest $81,700 @ 10%/year		8,170
Insurance and Taxes $81,700 @ 4%/year		3,270
Total Annual Fixed Charges		$ 19,610

3. DIRECT OPERATING COST

Raw Materials		
Utilities	$ 2,140	
Maintenance $ 81,700 x 0.04	3,270	
Direct Labor 900 MH x 9.00 x 1.5	12,150	
Annual Direct Operating Cost		$ 17,560
Annual Disposal Cost		100
Total Annual Cost		$ 37,270
Recovered Materials:		
Carbon Tetrachloride 4.9 KKg @ $320 x 0.7 = 1,100		
Antimony Pentachloride 18.0 KKg @ $2200 x 0.7 = 27,720		28,820
Net Total Annual Cost		$ 8,450

4. COST PER KKg PRODUCT $8,450 ÷ 80,000 $ 0.11

5. COST PER KKg WASTE $ 8,450 ÷ 18 $ 469.

6. IMPACT ON PRODUCT COST

(Market value of 1 KKg product = $1080)

Cost/KKg ÷ Market value = $0.11 ÷ $1080 0.01%

References and Bibliography

1. TRW Systems Group. Assessment of Industrial Hazardous Waste Practices, Organic Chemicals, Pesticides and Explosives Industries, Redondo Beach, Environmental Protection Publication, Report SW-118C, 1976.

2. Mark, H. F., J. J. McKetta, D. F. Othmer, and A. Stamden. Kirk-Othmer Encyclopedia of Chemical Technology, 2nd Ed. New York Interscience Publishers, John Wiley and Sons, 1965.

3. United States Patent Number 3,760,039, September 18, 1973, Washington, D. C., Ertel Et Al.

4. Chemical Market Reporter, September 20, 1976, Volume 210, Number 12, New York. Schnell Publishing Company, Inc.

5. Ottinger, R. S., J. L. Blumenthal, D. F. Dal Porto, G. I. Gruber, M. J. Santy, and C. C. Smith. Recommended Methods of Reduction, Neutralization, Recovery, or Disposal of Hazardous Waste. Volume II, Toxicologic Summary. Redondo Beach, Environmental Protection Publication 224-581, 1973.

6. Arthur D. Little, Inc. Application of Physical, Chemical and Biological Treatment Techniques to Hazardous Waste Management. Cambridge. 2V. Environmental Protection Contract 68-01-3554, 1976.

7. Incarus Corporation. Capital and Operating Costs of Pollution Control Equipment Modules. Silver Spring. 2V. Environmental Protection Publication EPA-R5-73-023a, 1973.

8. Personal Communication. E. P. Crumpler, Environmental Protection Agency, to J. M. Genser, Processes Research, Inc., October 14, 1976.

Still Bottoms From Fractionating Column

Chlorotoluene (Benzyl Chloride) Manufacture - Waste Stream No. 15

Waste Stream Description. Benzyl chloride is commercially produced by the following methods:

1. Boiling toluene is chlorinated in the absence of light and the reaction mixture is then agitated with a mild alkali and distilled.[1,3]

2. Toluene and chlorine are mixed continuously in the vapor phase.[1,2]

The last step in either process is distillation where the benzyl chloride as a product is taken from the overhead of the fractionating column. The bottoms from the fractionating column is a waste product containing 0.0005 kg of benzyl chloride and 0.0005 kg of benzo-trichloride per kg of the product benzyl chloride. This potentially hazardous waste is then discharged to chemical land disposal.[2] See Figure 5-25.

In 1972 production of alpha-chlorotoluene (benzyl chloride) in the United States was 36,500 metric tons. The typical process facilities were estimated to range in size from 10,000 to 15,000 metric tons per year.[2]

For the purposes of this study an annual plant capacity of 15,000 metric tons has been assumed and is based on operating 24 hours per day, 300 days per year.

The corresponding waste stream from the average fractionating column is about 15 metric tons per year having the following approximate composition:

Component	Metric Tons
Benzyl Chloride	7.5
Benzotrichloride	7.5

BASIS: 1 KG α - CHLOROTOLUENE (BENZYL CHLORIDE)

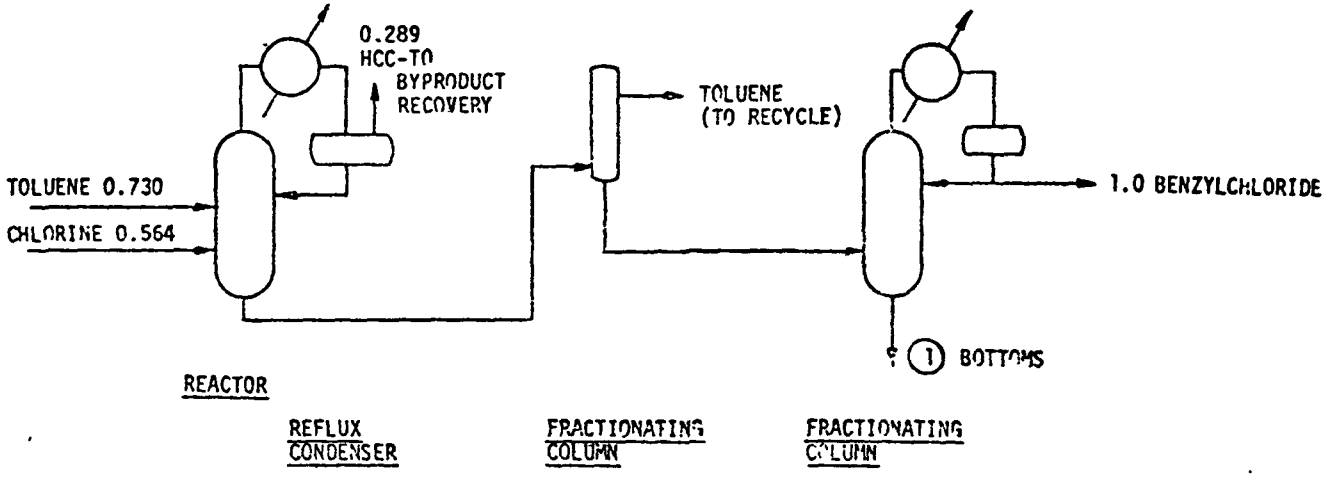

1

FRACTIONATING COLUMN BOTTOMS

BENZYLCHLORIDE	0.0005
BENZOTRICHLORIDE	0.0005

↓

LAND

STILL BOTTOMS FROM FRACTIONATING COLUMN, 1

WASTE STREAM NO. 15

FIGURE 5-25 CHLOROTOLUENE MANUFACTURE

Existing Treatment Method. The most prevalent method of disposal for the fractionating column waste stream is landfill.

Alternative Treatment Methods. Although no proven methods of waste recovery have been developed to date, it may be possible to use hydrogenation and then recycle the streams back to the initial process. This system would have to be developed in a pilot prior to installation in a commercial plant. At present this would be hard to justify economically, because the recovered costs for benzyl chloride and benzotrichloride waste from a plant that produces 15,000 metric tons of chlorotoluene per year is only $12,400 per year.[4]

Controlled incineration of this waste stream is possible but the costs would be very difficult to justify.

Another method of disposing of the waste stream would be to collect and transport it to a plant for chlorinolysis[5] if one exists in the area.

On the basis of the analysis of the problem and review of the various alternates, including incineration and chlorinolysis, it would seem that chemical land disposal is still the most practical method of disposal of this relatively small annual waste stream tonnage coming from the manufacture of chlorotoluene.

REFERENCES

1. TRW Systems Group. Recommended Methods of Reduction, Neutralization, Recovery, or Disposal of Hazardous Waste. Volume X, Profile Report. Environmental Protection Agency Report No. EPA-670/2-73-053-j; August 1973.

2. TRW Systems Group. Assessment of Industrial Hazardous Waste Practices: Organic Checmials, Pesticides and Explosives Industries: Environmental Protection Publication, Report SW-118C, 1976.

3. The Condensed Chemical Dictionary, Eighth Edition, Revised by Gessner G. Hawley, Van Nostrand Reinhold Company.

4. Chemical Marketing Reporter, September 20, 1976 Volume 210, Number 12 New York Schnell Publishing Company, Inc.

5. Arthur D. Little, Inc. Analysis of Potential Application of Physical, Chemical and Biological Treatment Techniques to Hazardous Waste Management. Cambridge, Mass. Environmental Protection Agency Contract No. 68-01-3554, 1976 (chlorinolysis).

Distillation Residues From Batch Fractionating Towers

Chlorobenzene Manufacture - Waste Stream No. 16

Waste Stream Description. Chlorobenzene is commercially produced by the following methods:

A. In batch process plants liquid phase dry benzene is pumped into a glass-lined reactor to which iron filings acting as catalyst are added. Gaseous chlorine is bubbled in at a rate to maintain 50C to produce crude chlorobenzene. The product is neutralized, allowed to settle and separate. Further batch fractionating produces mono and dichlorobenzene.[1,2] The residues from the fractionating tower are a waste product containing 0.004 kg of chlorobenzene, 0.0001 kg of dichlorobenzene and 0.0399 kg of polychlorinated aromatic resinous materials per kg of the product chlorobenzene. This potentially hazardous waste is then discharged to land disposal.[2] See flow sheet Figure 5-26. The purpose of this study is to evaluate potential alternative treatment methods for disposing of these residues.

In 1973 production of chlorobenzene in the United States was 180,000 metric tons.[2] The typical process facilities are estimated at 32,000 metric tons per year,[2] operating 24 hours per day, 300 days per year.

The corresponding waste stream from the average size distillation column is about 1,400 metric tons per year having the following approximate composition:

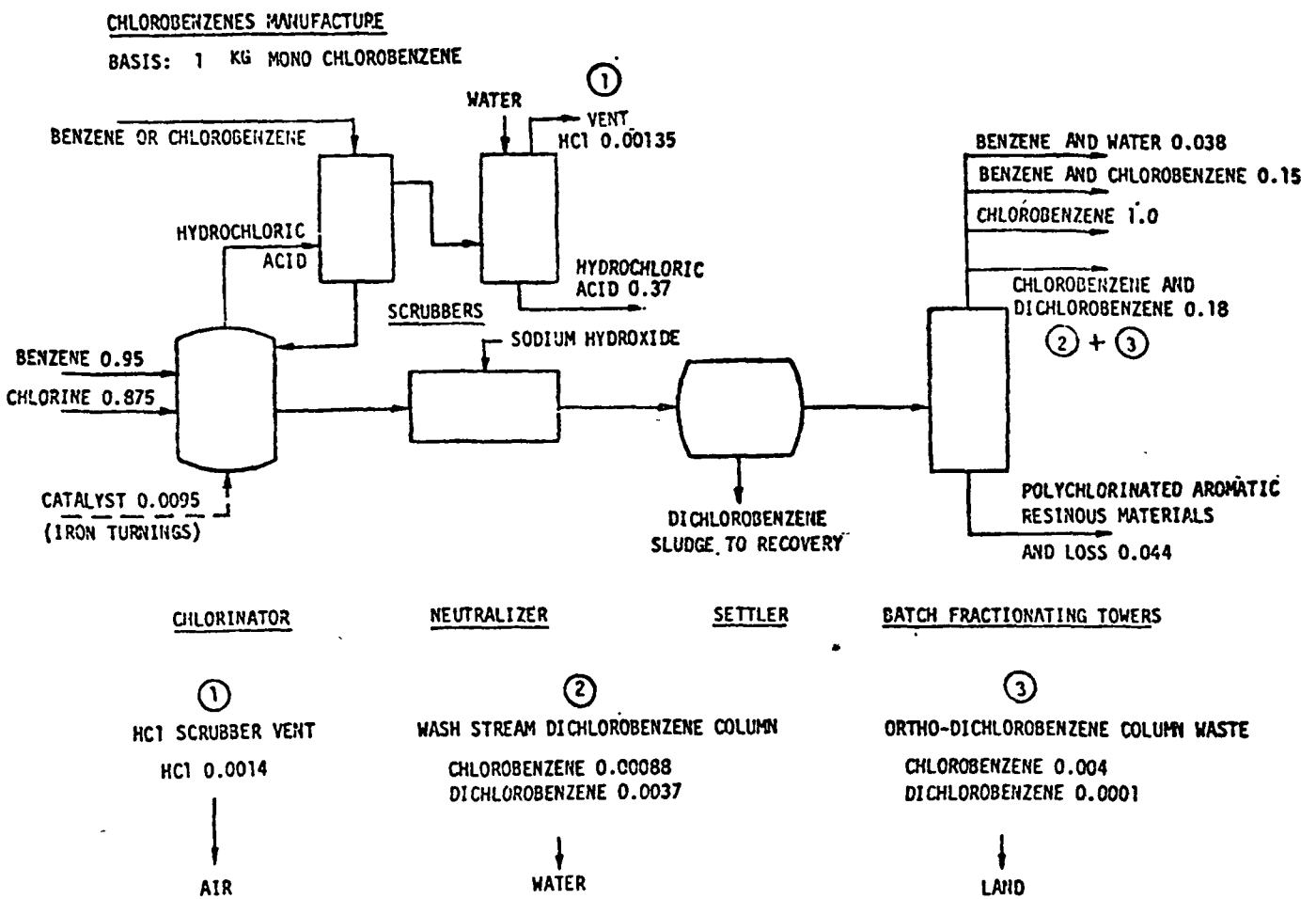

DISTILLATION RESIDUES FROM BATCH FRACTIONATING TOWERS, 3

WASTE STREAM NO. 16

FIGURE 5-26 CHLOROBENZENE MANUFACTURE

Component	Metric Tons Per Year
Chlorobenzene	128
Dichlorobenzene	3
Polychlorinated Aromatic Resinous Materials	1,280
Total	1,411

Existing Treatment Method. The most prevalent method of disposal for the distillation column waste stream is landfill. Based on a production of 180,000 metric tons of chlorobenzene the total quantity of waste for landfill would be 7,875 metric tons per year.

Alternative Treatment Methods. One possible method of handling the waste stream from the manufacture of chlorobenzene would be to transport it to a plant for chlorinolysis.[5] One chlorinolysis plant producing carbon tetrachloride could handle the waste streams from several plants which would alleviate the disposal problem in that particular area.

A more practical method is to dispose of the waste by controlled incineration. This is discussed in the Incineration Section of this report.

REFERENCES

1. TRW Systems Group. Recommended Methods of Reduction, Neutralization, Recovery, or Disposal of Hazardous Waste. Volume X, Profile Report. Environmental Protection Agency Report No. EPA-670/2-73-053-j, August 1973.

2. TRW Systems Group. Assessment of Industrial Hazardous Waste Practices: Organic Chemicals, Pesticides and Explosives Industries: Environmental Protection Publication, Report SW-118C, 1976.

3. G. Hawley Gessner, The Condensed Chemical Dictionary, Eighth Edition, Revised by Van Nostrand Reinhold Company.

4. John A. Riddick and William B. Bunger, Organic Solvents, Techniques of Chemistry, Volume II Physical Properties and Methods of Purification, Third Edition, by Wiley - Interscience, A Division of John Wiley & Sons, Inc.

5. Arthur D. Little, Inc. Analysis of Potential Application of Physical, Chemical and Biological Treatment Techniques to Hazardous Waste Management. Cambridge, Mass. Environmental Protection Agency Contract No. 68-01-3554, 1976 (Chlorinolysis).

Spent Alkali Scrubbing Solution - Cyanuric Chloride Manufacture in Atrazine Production - Waste Stream No. 17

Waste Stream Description. The spent alkali scrubbing solution is a waste stream from the manufacture of cyanuric chloride.[1] See Figure 5-27. Cyanuric chloride is one of the intermediate compounds necessary for the production of atrazine. Atrazine, a selected herbicide, had a total production rate in 1972 of 41,000 metric tons. A typical atrazine plant production rate is 20,000 metric tons per year. In the cyanuric chloride unit, hydrogen cyanide and chlorine undergo a catalytic polymerization to form cyanogen chloride and then cyanuric choride.[1] The catalyst is usually activated carbon when the reaction is carried out in the gas phase at 350 to 400C, or anhydrous aluminum chloride, boron fluoride, or HCl for a liquid phase reaction. The formation reaction is:

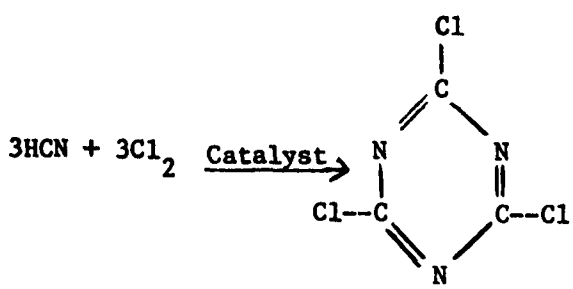

Waste gases from the cyanuric chloride manufacturing unit pass through the alkali scrubber to prevent the emission of hydrogen cyanide and cyanuric chloride into the atmosphere. For a typical plant of 20,000 metric tons per year, the total waste stream from the alkali scrubber is 224,600 metric tons per year of which 90 percent is water. The remaining 10 percent of the

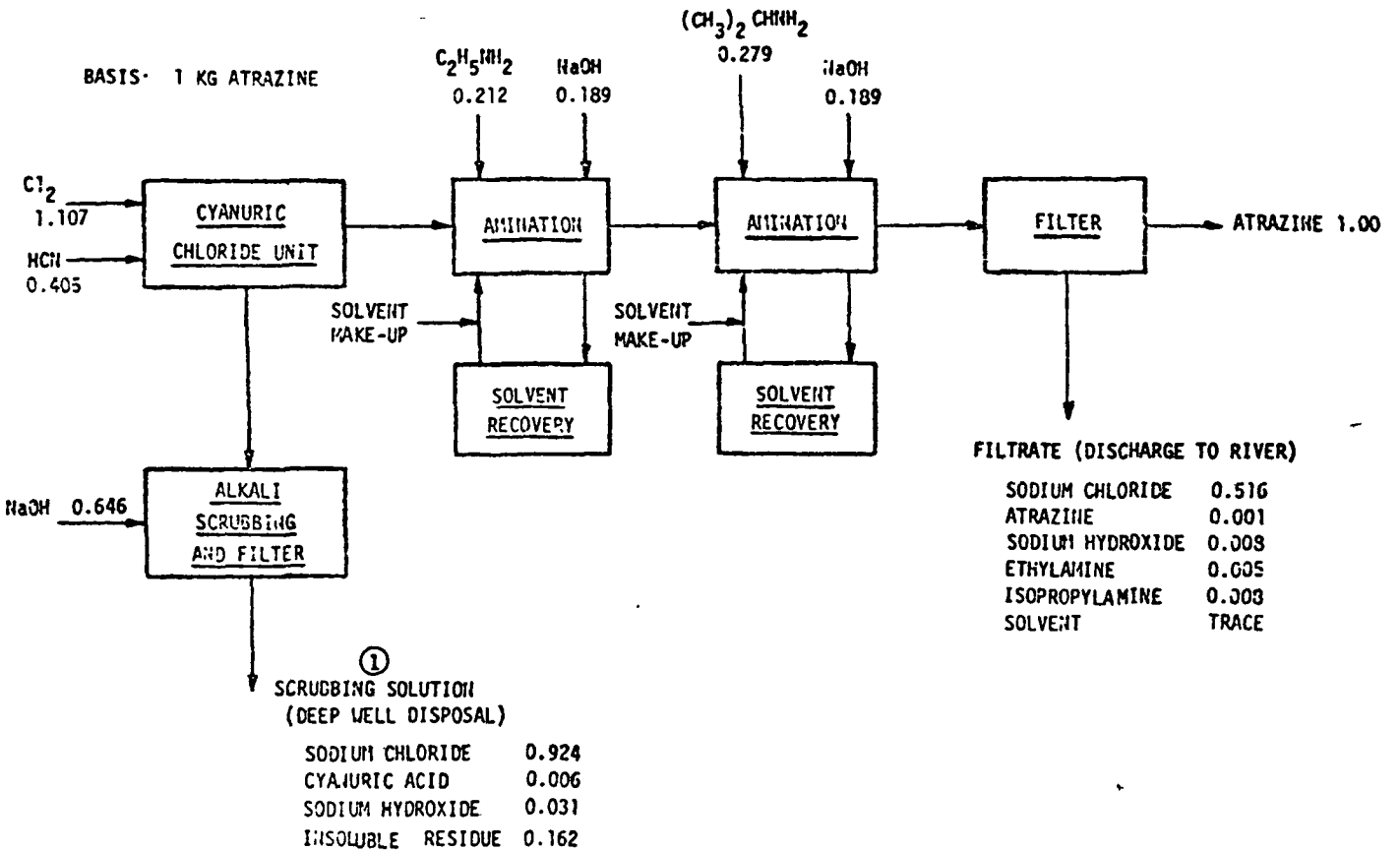

SPENT ALKALI SCRUBBING SOLUTION, 1

WASTE STREAM NO. 17

FIGURE 5-27 ATRAZINE MANUFACTURE

waste stream consists of sodium chloride (82 percent), insoluble residues (14-1/2 percent), excess caustic (3 percent), and cyanuric acid (1/2 percent).

Existing Treatment Methods. The present method of disposal of the alkali scrubbing wastes from cyanuric acid manufacture is deep well disposal. This is subsequent to filtration (to remove the insoluble residues) and neutralization. Deep well injection is not an acceptable means of disposal for these scrubber wastes, because there is:

1. Possible infiltration of brine into water table.
2. Presence of residues such as sodium cyanide and cyamelide.
3. Nondetoxification of cyanuric acid component.

Selected Alternative Treatment Process. To successfully treat the alkali scrubber wastes from cyanuric chloride manufacture it is necessary to detoxify the cyanuric acid and insoluble residues, and then treat the detoxified wastes which are contained within an 8.2 percent saline solution. A process (see Figure 5-28) that meets these needs would comprise: pH adjustment followed by ozonation, then biotreatment, plus evaporation and/or sale.

It is essential, in order for the biotreatment step to be successful, that the pH of the waste stream be adjusted to between pH 8 and pH 9. It is doubtful that any significant addition of chemicals would be warranted since the apparent pH would seem to be approximately 9.4. Adjustment would be needed only if a process upset in the alkali scrubbing system occurs and would involve the addition of either sodium hydroxide or hydrochloric acid.

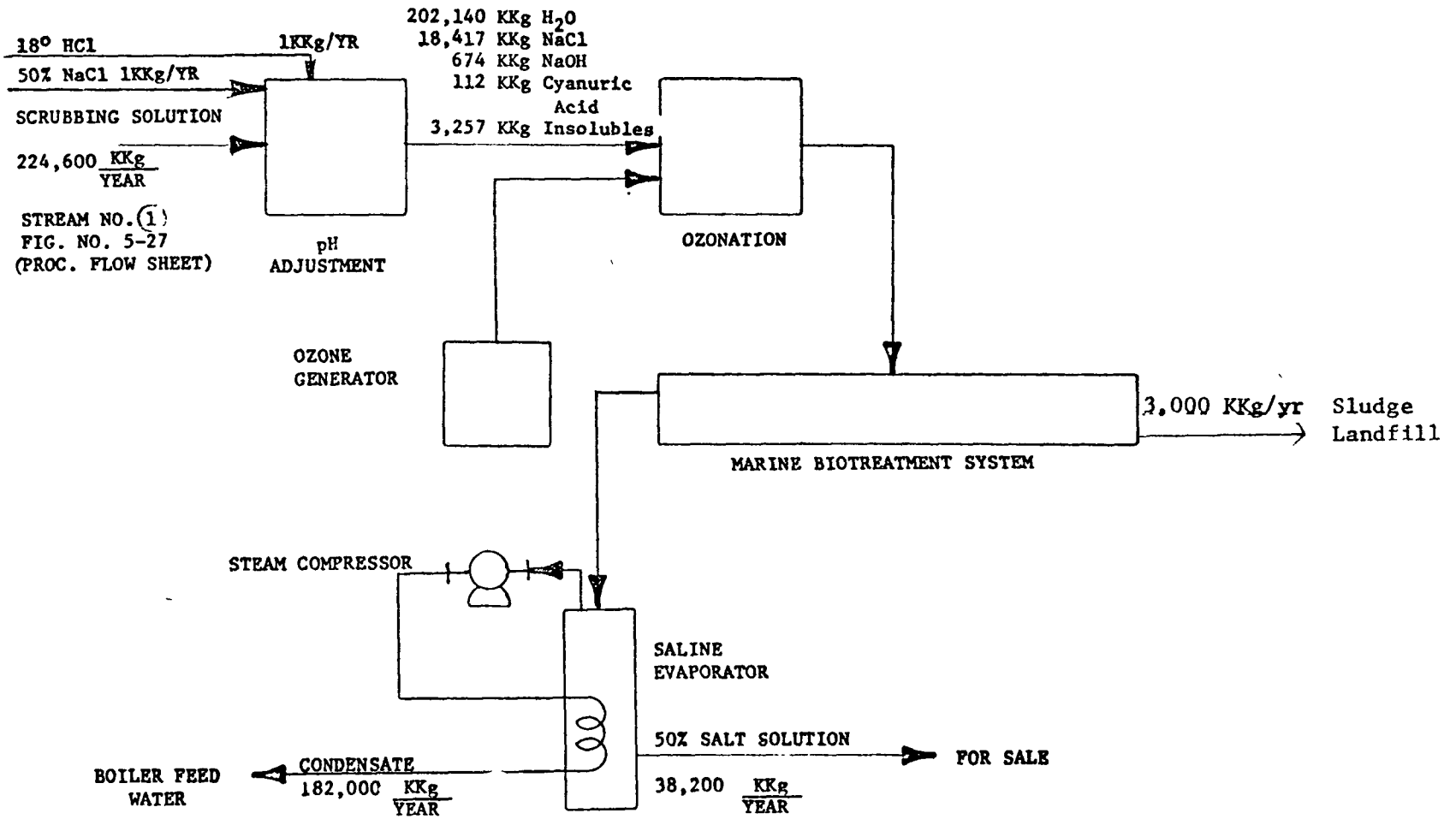

CYANURIC CHLORIDE MANUFACTURE - SPENT ALKALI SCRUBBING SOLUTION

WASTE STREAM NO. 17

FIGURE NO. 28

It has been determined[2] that ozonation is effective in the destruction of cyanuric acid and related cyanide wastes (the insoluble residues) by the reaction:

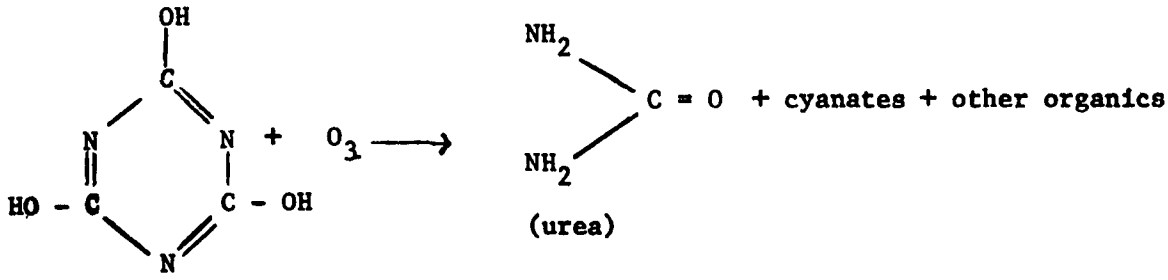

The ozonation products are considered to be detoxified and suitable for biotreatment. The only problem which exists in using normal biotreatment methods is the presence of an 8 percent saline solution. Since the microorganisms normally associated with conventional aerobic and/or anaerobic treatment systems will not exist in a salt solution, it would seem, therefore, that biotreatment of these detoxified wastes would be extremely difficult. However, there is a novel method of biotreatment known as a "marine" biopond. In a marine type biotreatment system, microorganisms, and possibly other forms of life such as algae, are taken from the sea and acclimated to the wastes in much the same manner as a conventional biological treatment system. These organisms will feed on the ozonated products of the residues and cyanuric acid and destroy them. As was previously stated, the pH of the mixture should be maintained between pH 8 and pH 9, due to the fact that this is the range of seawater and the microorganisms needed for marine biotreatment will live best in this condition.

Once biotreatment has been accomplished, the brine stream must be concentrated to aid in final disposal. This is necessary due to the magnitude (approximately 850 liters per minute) of the stream. A "flat-plate vapor compression" evaporator has been commercially demonstrated to have the ability to desalt cooling water and treat certain industrial wastes.[3] In this evaporator (Figure No. 5-28) the salt stream is fed from the feed pump through a heat exchanger, a deaerator and then into the body of the evaporator. The stream in the evaporator body is circulated to the top where it falls as a thin film over the internal heating elements and back down into the bottom of the evaporator. Vapors generated from this enter a compressor where they are further heated, due to the compression effect, to a higher temperature. These hot vapors flow into the internal heating elements of the evaporator and condense, evaporating more of the solution. The condensate then flows through the heat exchanger where it preheats the feed stream. This condensate, being essentially pure water, may then be used as either boiler feedwater or cooling tower makeup water.

The ozonation and biological treatment steps are expected to eliminate virtually all of the cyanuric acid and insoluble residues. The residues from ozonation and biological treatment steps will exist as an inert sludge in the biopond, and can be disposed of in a chemical land disposal. From the evaporator there will be two streams. The first, the steam condensate, will be returned for use as boiler feedwater at a rate of approximately 630 liters per minute. The second stream, consisting of sodium chloride, sodium

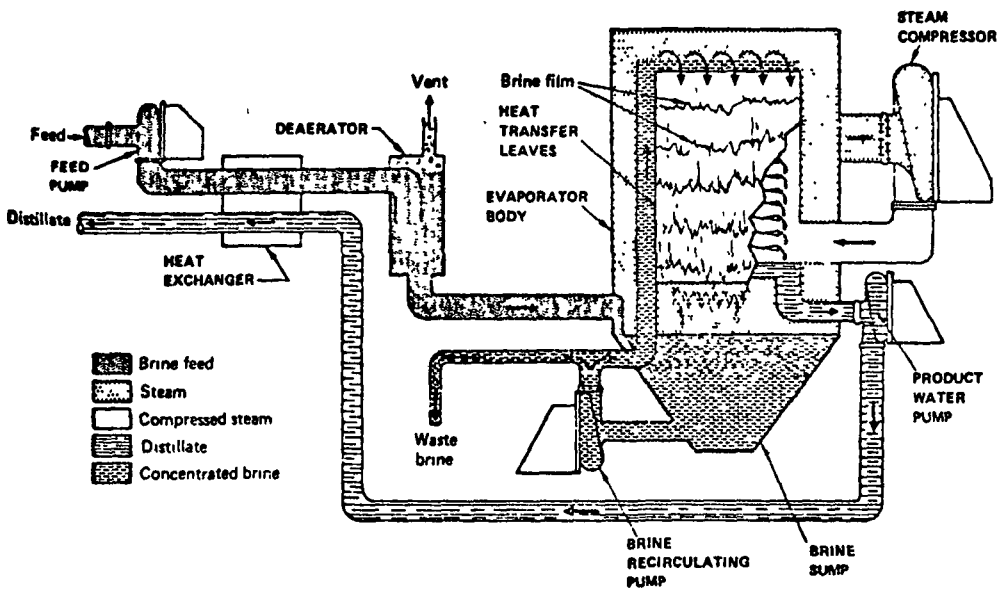

VAPOR COMPRESSION EVAPORATOR

FIGURE 5-29

hydroxide, and water, contains almost 50 percent solids and is emitted at a rate of 8,190 kg per hour. This represents a reduction of 82 percent in the mass of the waste stream.

The salt stream from the evaporator, consisting of sodium chloride and sodium hydroxide, may be disposed of through sale to a chemical user such as a chlorine-caustic plant or pigments producer.

Benefits and Environmental Advantages and Disadvantages. The treatment methods selected for the disposal of alkali scrubbing wastes from cyanuric chloride offer the following benefits:

1. Ozonation will oxidize the cyanuric acid and other "cyanide" compounds in the insoluble residues to cyanates (CNO^-) and other less toxic compounds. Hydrolysis will further degrade the cyanate complex to nitrogen, ammonia, and carbon dioxide.
2. The technology of ozonation is well established. Many suppliers of ozone systems exist within the United States.
3. A marine type biological treatment system could be expected to provide a satisfactory method of disposing of waste organic matter mixed in with saltwater streams.
4. After biological treatment, the use of the evaporator to concentrate the salt stream will allow reuse of almost 182,000 metric tons per year of water which can be used for boiler feed. This represents a potential savings of $24,000 per year for the water and over $250,000 per year additional if the sodium chloride-sodium hydroxide stream is sold to a chlorine-caustic plant.

Environmentally, the treatment method proposed for the cyanuric chloride scrubbing wastes has several advantages. These are:

1. Elimination of the need for deep well disposal.
2. Air emissions are negligible from the pH adjustment, ozonation, biological treatment, and evaporation processes. These will consist mainly of some ozone from the ozonation pond, and nitrogen and CO_2 mostly from the biological treatment section, and some as products of oxidation from the ozonation process.
3. Since the condensate from the evaporator is recycled as cooling tower makeup or boiler feedwater, and the concentrated salt stream is used as an industrial raw material, both water and land destined wastes are eliminated.

The environmental disadvantages of the treatment processes are:

1. Sludge from the marine type biological treatment system (estimated at approximately 3,000 metric tons per year) will have to be disposed of in a chemical landfill. This disposal choice is due to the salt content contained within the sludge.
2. Approximately 20 percent more ozone and air will have to be used in the ozonation and biotreatment systems, respectively, than normally would be expected.[4] This is caused by the lower solubility of gases in saltwater than in "fresh" water. The specific disadvantage occurs at the ozonation system where this additional usage will result in additional ozone discharges to the atmosphere.

Cost Analysis. The cost analysis is based on a plant producing 20,000 KKg per year of atrazine operating 24 hours per day and 300 days per year. A summary of capital cost, annual operating cost, and the cost impact for waste treatment follows.

WASTE STREAM NO. 17

1. ESTIMATED INSTALLED CAPITAL COST

BASIS: 748.7 KKg/Day of Waste Scrubbing Solution

Equipment Item		Estimated Cost
pH Adjustment	681,000 ℓ/day	$ 109,500
Ozonation Lagoon	681,000 ℓ/day	262,800
Biological Treatment System	681,000 ℓ/day	94,900
Evaporator	681,000 ℓ/day	1,168,000
Ozone Generator		1,413,000
Subtotal		$ 3,048,200
Engineering @ 10%		304,800
Contingency including freight @ 20%		609,600
Total		$ 3,962,600

WATER STREAM NO. 17

2. ANNUAL FIXED CHARGES

Depreciation	$ 3,962,600 @ 10%/year	$ 396,300
Interest	$ 3,962,000 @ 10%/year	396,300
Insurance and Taxes	$ 3,962,000 @ 4%/year	158,500
Total Annual Fixed Charges		$ 951,100

3. DIRECT OPERATING COST

Raw Material	$ 200	
Utilities	46,700	
Maintenance @ 4% x 3,962,600	158,500	
Direct Labor 6240 Hrs x 9.0 x 1.5	84,200	
Annual Direct Operating Cost		$ 289,600
Annual Disposal Cost, 3,000 KKg Sludge		51,000
Total Annual Cost		$1,291,700
Recovered Materials NaCl: 19,100 KKg @ $20.00 x 0.7		-267,400
Net Total Annual Cost		$1,024,300

4. COST PER KKg PRODUCT $1,024,000 ÷ 20,000 KKg $51.

5. COST PER KKg WASTE $1,024,000 ÷ 224,600 $ 4.60

6. IMPACT ON PRODUCT COST

(Market value of 1 KKg product = $4,295) 1.2%

Cost/KKg ÷ Market value/KKg = $51 ÷ $4,295 1.2%

REFERENCES

1. TRW System Group. Assessment of Industrial Hazardous Waste Practices: Organic Chemicals, Pesticides and Explosives Industries: Environmental Protection Publication, Report SW-118C, 1976.

2. Private Communication, Farber, P. S. Processes Research with Emery Industries, October, 13, 1976.

3. Prescott, James H. "New Evaporation - Step Entry". McGraw-Hill's 1972 Report on Business and the Environment, pp. 5-15

4. Babbit and Baumann. "Sewerage and Sewage Treatment," 8th Edition 1967, John Wiley & Sons.

Spent Activated Carbon From Adsorption Treatment - Trifluralin Manufacturer

Waste Stream No. 18

Waste Stream Description. Trifluralin is an herbicide with a production rate of about 10,000 metric tons per year in 1972. The compound is produced via the mixed acid nitration of p - chlorobenzotrifluoride followed by a reaction with dipropylamine. See Figure 5-30. These reactions are:

1.

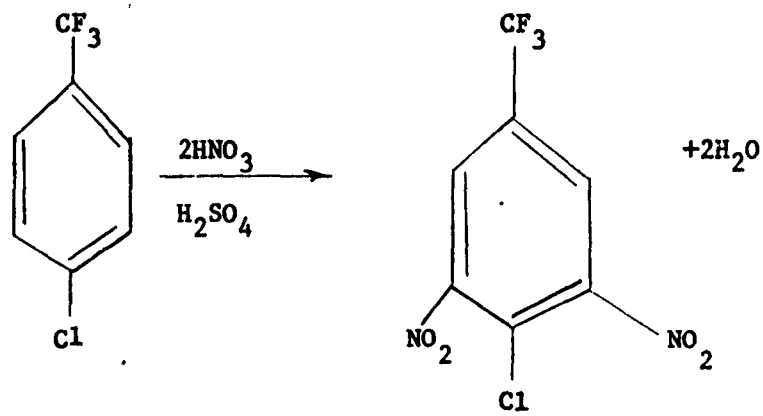

2.

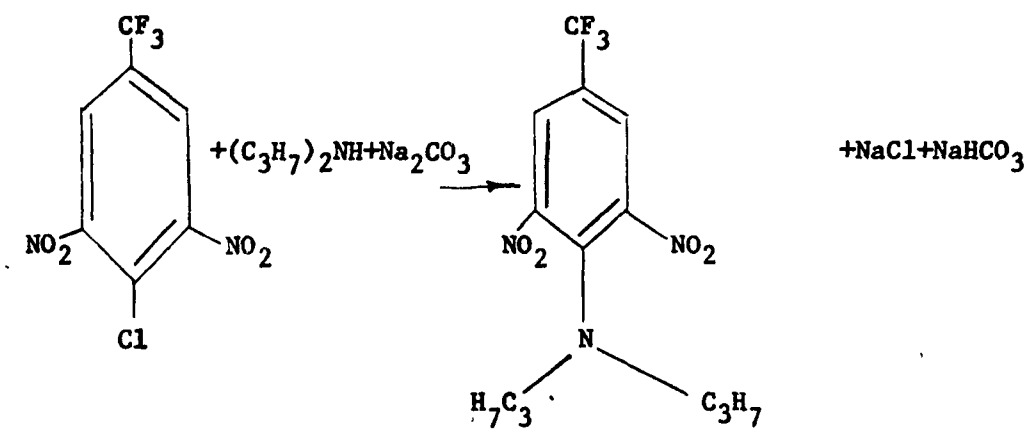

From the amination reactor the process stream is filtered and then decanted to separate the trifluralin, which is in solution with chloroform ($CHCl_3$). The wastewater stream from the decanter is sent to activated carbon adsorption and then to biological treatment. The spent activated carbon, from a typical plant producing 10,000 metric tons of trifluralin per year, amounts to a total of 1150

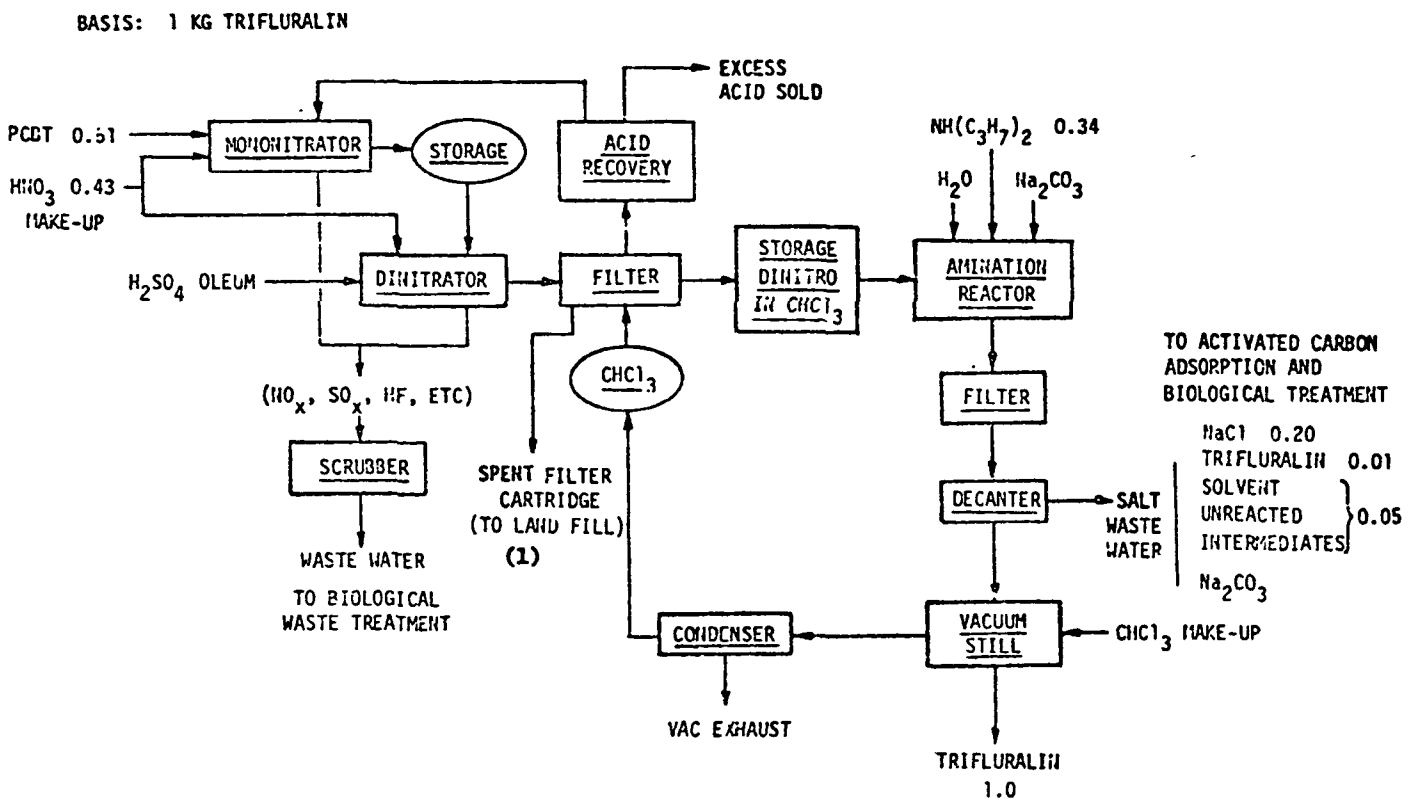

SPENT ACTIVATED CARBON FROM ADSORPTION TREATMENT

WASTE STREAM NO. 18

FIGURE 5-30. TRIFLURALIN MANUFACTURE

metric tons per year. Of the total spent carbon waste stream 600 metric tons per year is spent carbon, 457 metric tons is unreacted intermediates and solvent, and 93 metric tons is trifluralin and related compounds.[1]

Existing Treatment Methods. At present the existing treatment method for the spent activated carbon from trifluralin manufacture is storage in plastic-lined steel drums. The plastic lining is necessary due to the fluoride content of the components adsorbed within the carbon and their corrosiveness on bare steel. This method of disposal is only a short term solution due to the accumulation of drums over the years and the danger of leaks and/or spills from the drums.

Selected Alternative Treatment Processes. To effectively treat the activated carbon wastes from trifluralin manufacture it is necessary to first separate the activated carbon from the wastes and then to treat the separated wastes. Based on these criteria, the selected treatment scheme, (see Figure No. 5-31,) for the trifluralin wastes requires the following unit processes:

1. Grinding
2. Solvent Extraction
3. Centrifugation
4. Vacuum Stripping, and Distillation
5. Composting
6. Chemical Landfill

The first step in the alternative treatment processes is grinding the spent activated carbon. There are several devices which can be utilized for this

Stream No. 1
Figure No. 5-30
(Process Flow Sheet)

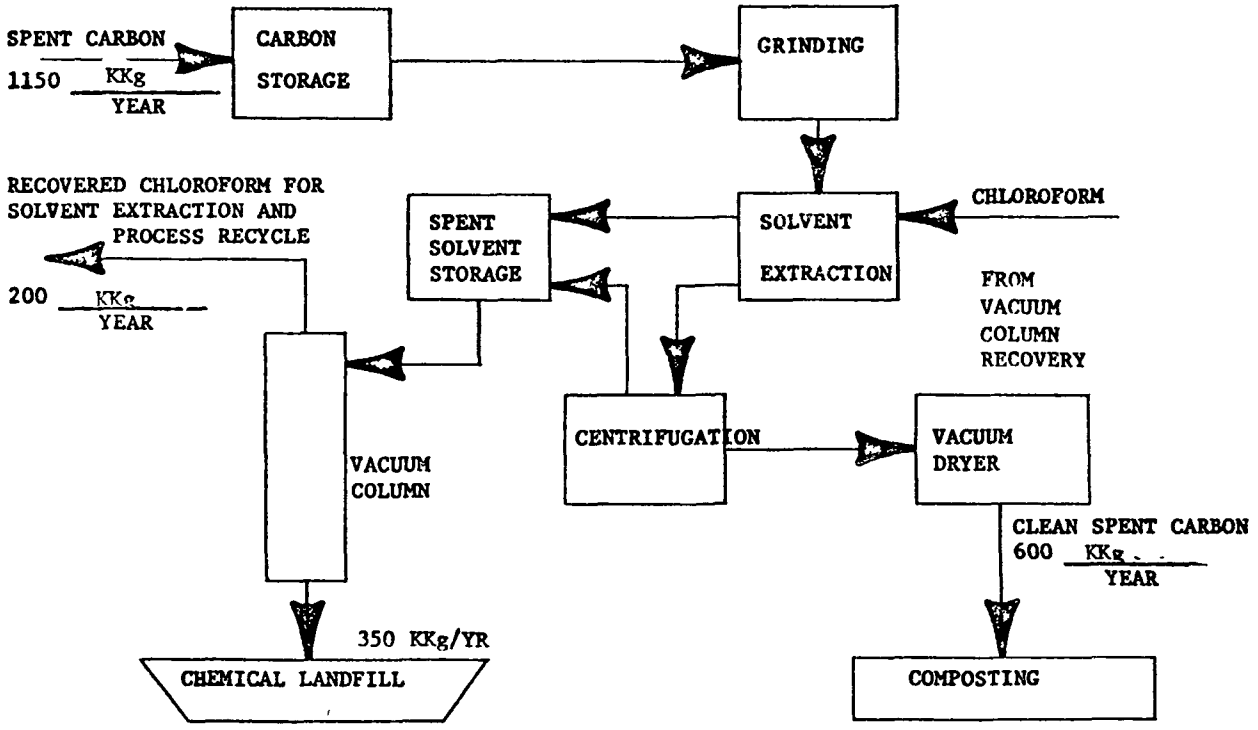

SPENT ACTIVATED CARBON FROM ADSORPTION TREATMENT

TRIFLURALIN MANUFACTURE - WASTE STREAM NO. 18

FIGURE NO. 5-31

purpose such as a pin mill or a ball mill. The purpose of grinding the spent activated carbon is to expose as much surface area as possible to the next step in the process, solvent extraction.

Since trifluralin, its unreacted intermediates, and the related fluoroaromatic compounds are all soluble in chloroform it should be possible to solvent extract them from the ground-up, spent activated carbon. This extraction is performed continuously with extracted carbon and solvent drawn off in separate streams. The extracted carbon is next centrifuged to remove more of the entrained solvent. The recovered spent carbon from centrifugation is next sent to a vacuum column where any remaining solvent is stripped off and condensed. The spent solvent from the solvent extraction step is combined with the spent solvent recovered from the centrifuge and vacuum distilled to recover the chloroform that had been originally trapped in the activated carbon. The chloroform thus recovered is combined with the chloroform that had been vacuum stripped from the carbon. It is estimated that 200 metric tons per year of chloroform would be recovered from the original spent carbon with a worth of approximately $60,000 per year. The remainder of the chloroform would be returned to storage for reuse in the extraction section of the treatment process.

The cleaned spent carbon (600 metric tons per year) would be sent to composting for final disposal. At the composting area, the carbon is combined with lime and buried in windrows for final decomposition by action of soil bacteria, air, and sunlight. For details of basis for estimating composting, see Waste Stream 12. The material remaining from the distillation process, after chloroform recovery,

consists of trifluralin and related fluroaromatic compounds (93 metric tons per year), some chloroform and unreacted intermediates (about 260 metric tons per year). Since nothing is known, at present, as to the nature of the related fluroaromatic compounds, the only method which is appropriate for final disposal is a chemical landfill, providing complete long-term protection of the surface and subsurface waters from the wastes contained within the landfill. Any leachates are contained, and subsurface flow into the disposal area is eliminated.[2]

Benefits, Environmental Advantages and Disadvantages. The economic benefits of these treatment processes are:

1. Recovery of approximately 200 metric tons per year of chloroform valued at about $60,000 per year.

2. Elimination of storage in plastic-lined drums as a means of disposal.

The environmental advantages of the treatment processes are:

1. Elimination of emissions to the air, water, and land.

2. Reduction in volume by over 50 percent of the material which is sent to the chemical landfill.

3. Moderate energy utilization needed for the treatment processes.

The environmental disadvantage of this treatment process is that chemical landfill is not the most desirable means of final disposal, even with a volume reduction. It is almost certain that, if more detailed information as to the physiochemical makeup of the related fluroaromatic compounds were known, a better means of disposal and resource recovery could be determined.

Cost Analysis. The cost analysis is based on a plant producing 10,000 KKg per year of trifluralin operating 24 hours per day and 300 days per year. A summary of capital cost, annual operating cost, and the cost impact for waste treatment follows.

WASTE STREAM NO. 18

1. ESTIMATED INSTALLED CAPITAL COST

BASIS: 3.84 KKg/Day of Spent Carbon

Equipment Item		Estimated Cost
Carbon Storage Tank	32 M^3	$ 148,000
Carbon Conveyor	500 kg/hr	22,000
Grinder	500 kg/hr	29,000
Solvent Extractor	4,000 ℓ	74,500
Solvent Pumps (3) @ 9,600	20 ℓ/min	28,800
Spent Solvent Storage	5,000 ℓ	23,400
Sludge Pump	1,000 kg/hr	21,000
Centrifuge	1,000 kg/hr	159,000
Solvent Pump	12 ℓ/min	8,500
Carbon Conveyor	350 kg/hr	44,000
Vacuum Pump	75 kw	36,500
Vacuum Dryer	350 kg/hr	53,000
Vacuum Column		177,000
Column BTMS Pump	3 ℓ/min	11,300
Solvent Pump	2 ℓ/min	7,800
Subtotal		$843,800
Engineering @ 10%		84,400
Contingency including freight @ 20%		168,800
Total		$1,097,000

2. ANNUAL FIXED CHARGES

Depreciation $1,097,000 @ 10%/year		$ 109,700
Interest $1,097,000 @ 10%/year		109,700
Insurance and Taxes $1,097,000 @ 4%/year		43,900
Total Annual Fixed Charges		263,300

3. DIRECT OPERATING COST

Raw Material		
Utilities	$ 19,500	
Maintenance 0.04 x 1,097,000	43,900	
Direct Labor 12,000 Hrs x 9.0 x 1.5	162,000	
Annual Direct Operating Cost		$ 225,400
Annual Disposal Cost Composting 600 KKg @ $9.0/KKg = $5,400 Chemical Landfill $26,000		31,400
Total Annual Cost		$ 520,100
Recovered Materials: Chloroform - 200 KKg x $440 x .7		-61,600
Net Total Annual Cost		$ 458,500

4. COST PER KKg PRODUCT $458,500 ÷ 10,000 KKg $ 46.

5. COST PER KKg WASTE $458,500 ÷ 1,150 $ 400.

6. IMPACT ON PRODUCT COST

(Market value of 1 KKg product = $12,290) 0.37%

Cost/KKg ÷ Market value/KKg = $45.85 ÷ $12,290 0.37%

REFERENCES

1. Arthur D. Little, Inc., Assessment of Industrial Hazardous Waste Practices: Organic Chemicals, Pesticides and Explosives Industries, Cambridge, Mass. EPA Contract No. 68-01-2919, Pages 5-92.

2. Landfill Disposal of Hazardous Wastes - A Review of Literature and Known Approaches. EPA/530/SW-165. Sept. 1975 Page 5.

Filter Cake Solids - Malathion Manufacture - Waste Stream No. 19

Waste Stream Description. In the manufacture of malathion, see Figure 5-32, an intermediate compound dimethyl dithiophosphoric acid (DMDTPA), is formulated by reaction of phosphorus pentasulfide and methanol in a toluene solution, the reaction being: $P_2S_5 + 4(CH_3OH) \longrightarrow H_2S + 2(CH_3O)\overset{S}{\overset{\|}{P}}\text{-}SH$. Side reactions which take place simultaneously with the formation of the dimethyl dithiophosphoric acid produce insoluble reaction products. In order to separate out these insolubles, the reaction solution is filtered. The discarded filter cake for a typical malathion plant with an annual production rate of 14,000 tons per year totals 1,826 metric tons per year (0.13 Kg per Kg Malathion). These wastes consist of 1,000 metric tons of filter aid, 756 metric tons of toluene and insoluble reaction products and 70 metric tons of dimethyl dithiophosphoric acid.[1,2]

Existing Treatment Methods. At present, this waste is detoxified with sodium hydroxide and sent to landfill.[2] In the detoxification with sodium hydroxide it is hypothesized that the following reactions take place:

$$3NaOH + 2(CH_3O)_2\overset{S}{\overset{\|}{P}}\text{-}SH \longrightarrow NaSH + (CH_3O)_2\overset{S}{\overset{\|}{P}}\text{-}OH + Na_2S + (CH_3O)_2P(OH)_3$$

This method of disposal can still be considered hazardous, because of the possibility of leakage of materials into groundwater.

Selected Alternative Treatment Processes. The treatment sequences selected (see Figure No. 5-33) for the spent filter cake from malathion manufacture require the following steps:

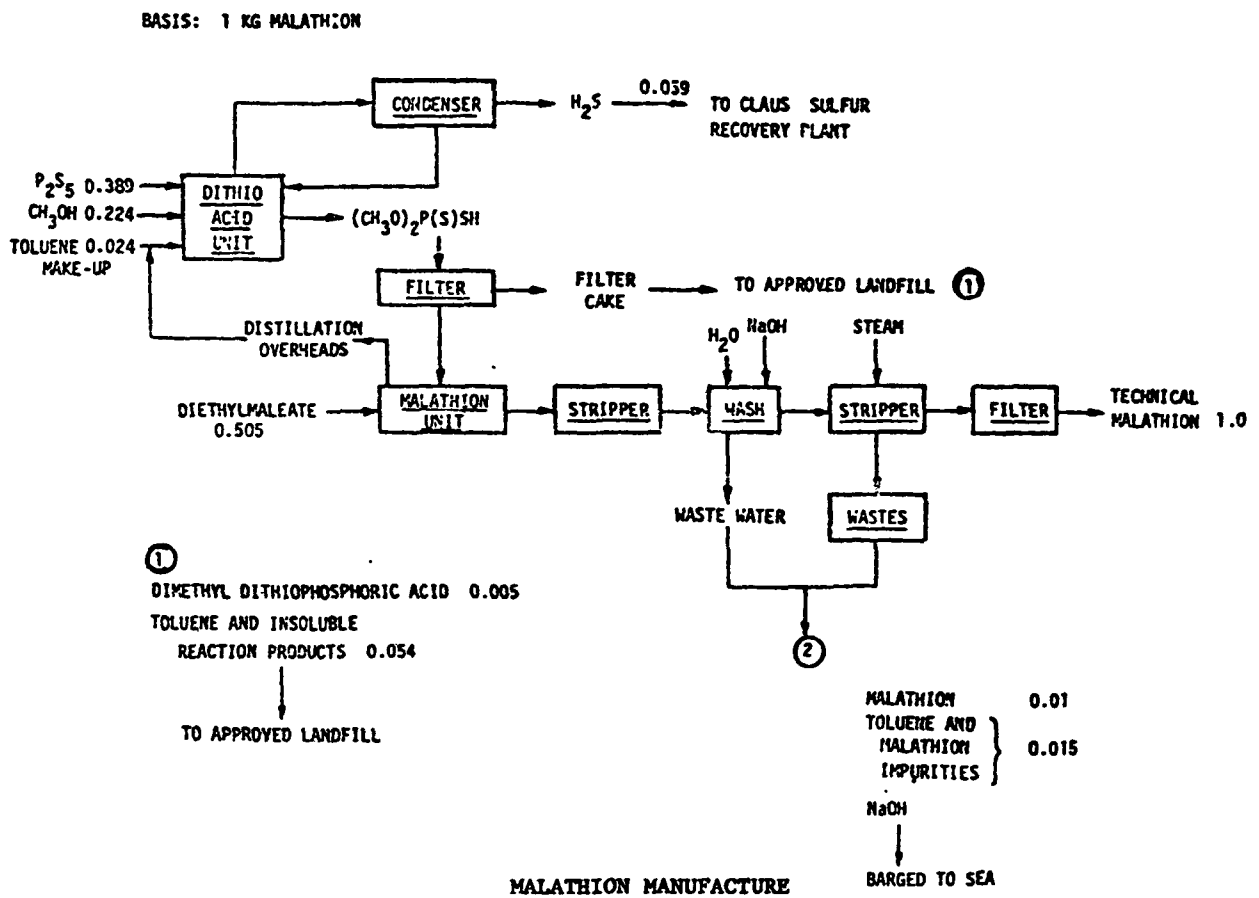

MALATHION MANUFACTURE

FILTER CAKE (1) AND LIQUID PROCESS WASTES (2)

WASTE STREAMS NO. 19 AND 20

FIGURE NO. 5-32

Stream No.- 1
Fig. No. 5-32
(Proc. Flow Sheet)

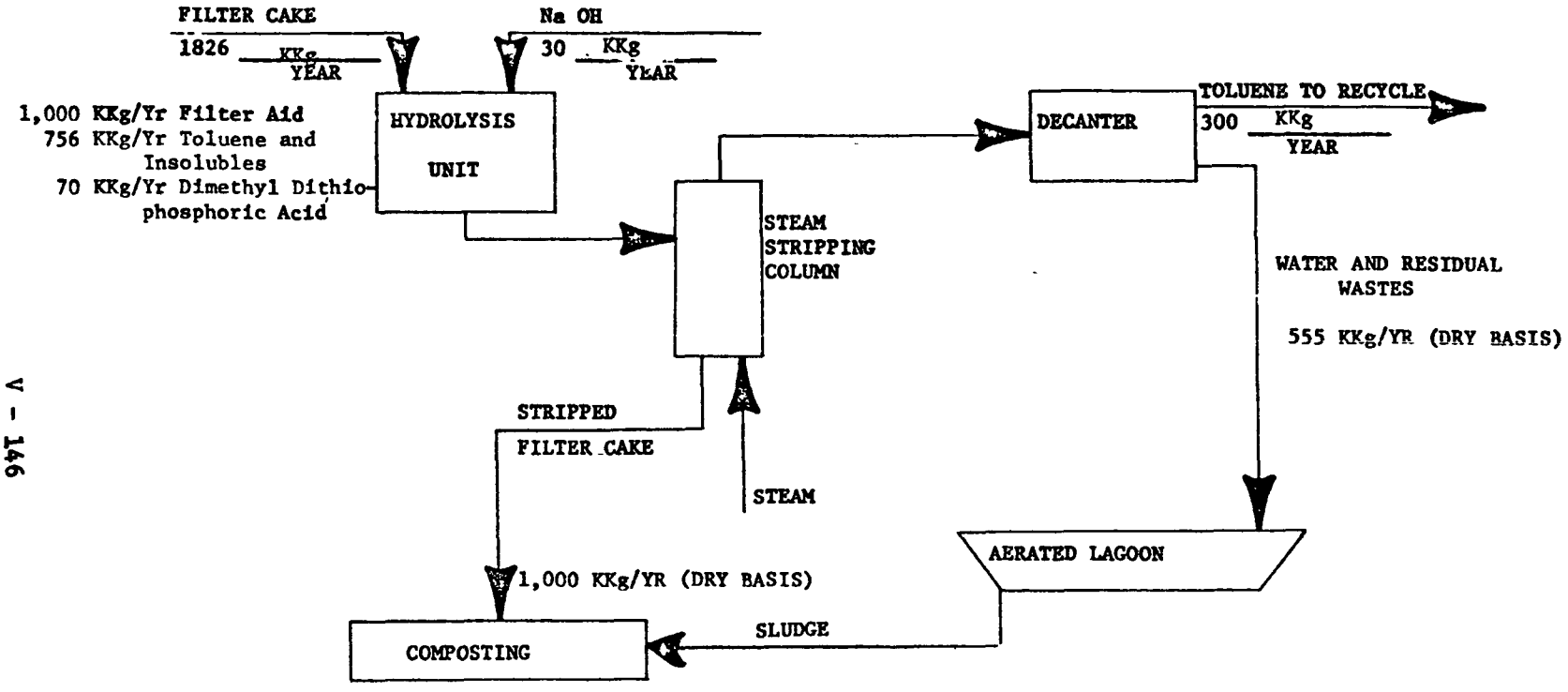

FILTER CAKE - MALATHION MANUFACTURE

WASTE STREAM NO. 19

FIGURE NO. 5-33

(1) Hydrolysis; (2) Steam stripping; (3) Decantation; (4) Composting; (5) Biological treatment.

The first step in the treatment process is hydrolysis. In this step the filter cake is combined with a sodium hydroxide solution in a stirred tank. The chemical reaction is the same as was previously mentioned, that is, the hydrolysis of dimethyl dithiophosphoric acid to dimethyl thiophsphate. This results in a partial detoxification of the waste filter cake.

In the next step the partially detoxified filter cake is steam stripped. The steam stripping process will remove from the filter cake the entrained toluene, the hydrolyzed dimethyl dithiophosphoric acid, and any other related compounds which may have resulted from a reaction of the sodium hydroxide solution with the insoluble reaction products. These steam stripped wastes are sent to a decantation unit for the next step in the treatment process. In the decantation unit toluene is recovered for reuse back in the original process. It is estimated that the filter cake would retain about 0.3 Kg toluene per kilogram of powdered carbon. This could result in a recovery of 300 metric tons of toluene per year valued at approximately $35,000.

The decantation unit residues, after toluene recovery would be sent to biological treatment (an aerated lagoon) for final treatment of any residual wastes. The spent filter cake, which is now relatively clear of all hazardous components can either be reused as filter aid or, which is more likely, composted. This composting involves the mixing of the filter cake with lime and/or limestone and progressively burying it in windrow piles. Powdered

carbon by itself will not degrade in a composting operation but will provide the needed soil porosity. For details of basis for estimating composting, see Waste Stream 12.

Benefits, Environmental Advantages and Disadvantages. The alternative treatment method for disposal of spent filter cake from malathion manufacture has several benefits. These are:

1. Replacement of landfill as a means of disposal with composting. This is both a benefit and an environmental advantage, since landfill is generally considered to be a "one time" land use, whereas composting allows the same land to be used over again at intervals.

2. Recovery of about 1 metric ton per day of toluene with a worth of $35,000 per year for reuse back into the process.

3. The biological treatment system will insure that any hazardous materials not detoxified in the hydrolysis step are reduced to harmless components.

Environmentally the treatment process has the advantage of eliminating any emissions to the air or water plus the advantages mentioned under the preceding benefits paragraph.

The environmental disadvantages of this treatment process are:

1. Land is still required to some extent for disposal (composting) even though direct landfill itself has been eliminated.

2. The biological treatment process will produce a sludge which must be disposed of with the cleaned filter cake in the composting area.

Cost Analysis. The cost analysis is based on a plant producing 14,000 KKg

per year of malathion operating 24 hours per day and 300 days per year. A summary of capital cost, annual operating cost, and the cost impact for waste treatment follows.

WASTE STREAM NO. 19

1. ESTIMATED INSTALLED CAPITAL COST

BASIS: 6 KKg/Day of Filter Cake

Equipment Item	Size	1977 Dollars
Sludge Pump	15 ℓ/min	$ 17,000
Hydrolysis System	8,000 ℓ	45,000
Caustic Pump	1 ℓ/min	5,000
Hydrolysis Pump	15 ℓ/min	17,000
Stripping Column	46 cm dia x 6 m	57,000
Decanter	800 ℓ	9,000
Toluene Pump	1 ℓ/min	5,000
Waste Slurry Pump	10 ℓ/min	15,000
Bottoms Pump	10 ℓ/min	15,000
Aerated Lagoon		60,000
Subtotal		$ 245,000
Engineering at 10%		24,500
Contingency including freight at 20%		49,000
Total Estimated Installed Capital Cost		$ 318,500

2. ANNUAL FIXED CHARGES

Depreciation $318,500 @ 10%		$ 31,900
Interest $318,500 @ 10%		31,900
Insurance & Taxes $318,500 @ 4%/year		12,700
Total Annual Fixed Charges		76,500

3. DIRECT OPERATING COST

Raw Material 50% NaOH - 30 KKg @ $155/KKg	$ 4,700	
Utilities	4,300	
Maintenance 0.04 x 318,500	12,700	
Direct Labor 7200 MH x 9.0 x 1.5	97,200	
Annual Direct Operating Cost		$118,900
Annual Disposal Cost 1,000 KKg x 9.0/KKg		9,000
Total Annual Cost		$204,400
Recovered Materials: Toluene 300 KKg @ 165/KKg x 0.7		-34,700
Net Total Annual Cost		$169,700

4. COST PER KKg PRODUCT $170,000 ÷ 14,000 $12.

5. COST PER KKg WASTE $170,000 ÷ 1,826 $93.

6. IMPACT ON PRODUCT COST

(Market value of 1 KKg product = $2,090)

Cost/KKg ÷ Market value/KKg = $12 ÷ $2,090 0.57%

REFERENCES

1. Mark, H. F., J. J. McKetta, D. F. Othmer, and A. Standen. Kirk-Othmer Encyclopedia of Chemical Technology, 2nd Ed., New York. Interscience Publishers, John Wiley and Sons, 1967.

2. TRW Systems Group, Assessment of Industrial Hazardous Waste Practices: Organic Chemicals, Pesticides and Explosives Industries, Environmental Protection Publication, Report SW-118C, 1976.

Liquid Process Wastes - Malathion Manufacture

Waste Stream No. 20

Waste Stream Description. In the final phases of the manufacture of malathion, the crude product stream is purified. This purification consists of first, a caustic (sodium hydroxide) wash, and second, a steam stripping operation.[1] The combined wastes from the washing and stripping steps constitute this waste stream, totaling approximately 14,350 metric tons per year for a typical 14,000 MT malathion plant. The waste stream consists of 350 metric tons per year (.025 Kg/Kg malathion) of malathion, toluene, and malathion impurities, and the remaining 14,000 metric tons per year (1 Kg/Kg malathion) of an estimated 2 percent sodium hydroxide solution. See Figure 5-33.

Existing Treatment Methods. At present, the liquid process wastes from malathion manufacture are disposed of by ocean dumping. This method of disposal is unacceptable for several reasons; first U. S. laws and, in the near future, international convention, will make this practice illegal; second, this method does not make any attempt to detoxify the waste, merely to dispose of it; and third, no attempt is made to recover the 140 metric tons per year of malathion (estimated value of $205,000 per year) and approximately 100 metric tons per year of toluene (estimated value of $11,500 per year).

Selected Alternative Treatment Processes. In order to recover usable products, reduce the volume of the waste stream and, detoxify the wastes, an alternative treatment process has been selected based on sedimentation, resin adsorption with solvent regeneration, vacuum distillation, hydrolysis and finally biotreatment (composting). See Figure No. 5-34.

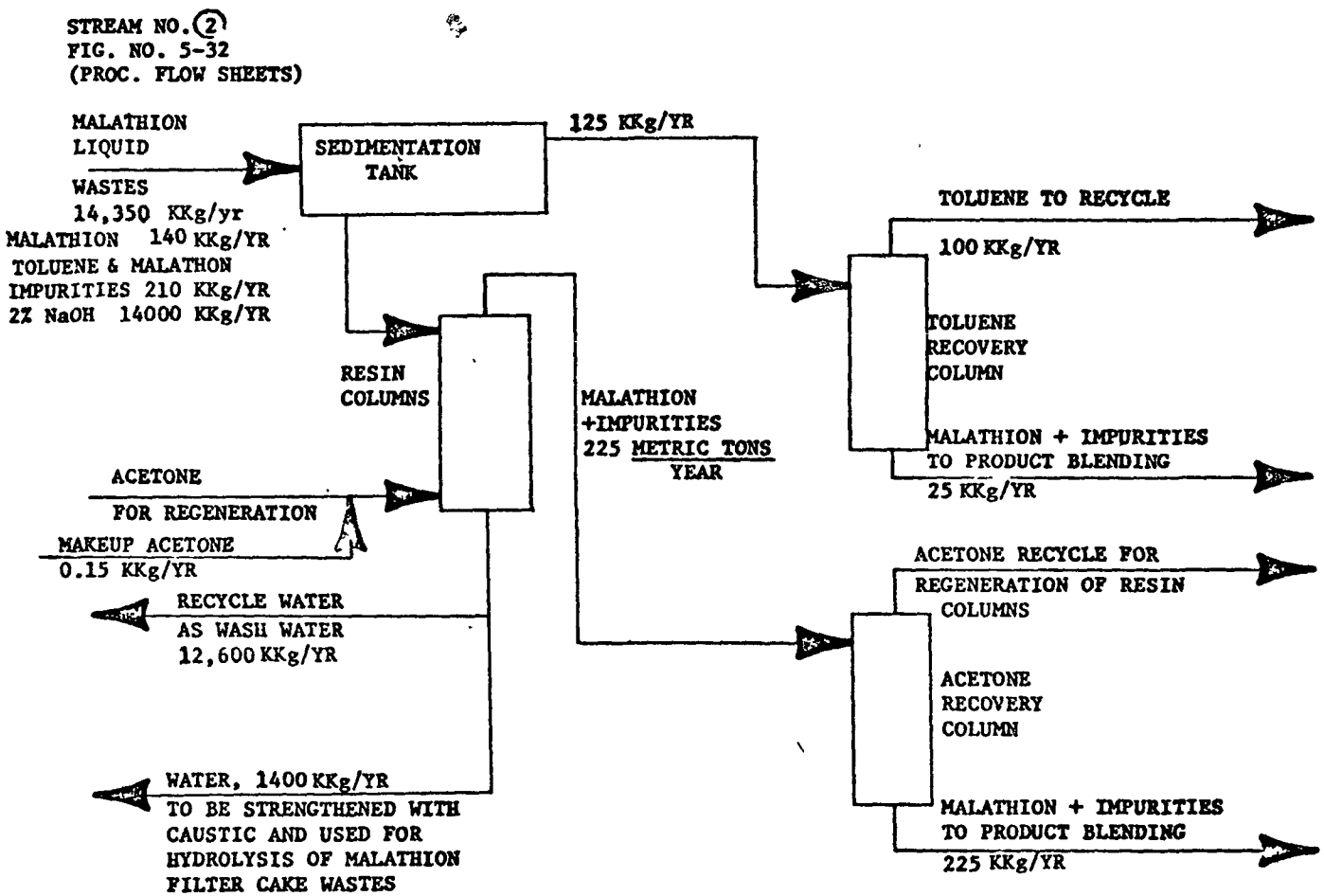

LIQUID WASTES - MALATHION MANUFACTURE

WASTE STREAM NO. 20

FIGURE NO. 5-34

Since the organic waste constituents of the waste stream are a fraction of the water carrier (about 2.4 percent), it is important to segregate these from the water in order to reduce the volume of wastes to be treated. Toluene, being insoluble in water, can be separated from the aqueous waste stream by sedimentation (decantation). This process involves sending the aqueous waste stream through a vertical tank with a large length to diameter ratio, and a long retention time, to allow adequate time for phase separation between the toluene (specific gravity 0.86) and the aqueous phase (specific gravity about 1). The toluene recovered will, of course, contain some of the malathion and malathion impurities and constitute about 125 metric tons per year. The remainder of the wastes (14,225 metric tons per year) are sent to resin adsorption.

Resin adsorption is a process for the removal of organic chemicals from aqueous streams. "Waste treatment by resin adsorption involves 2 basic steps: (1) contacting the liquid waste stream with the resins to adsorb the solutes from the solution; and (2) subsequently, regenerating the resins by removing the adsorbed chemicals...by washing with the proper solvent."[2] The resin used for adsorption is a polymeric adsorbent, generally a cross-linked type polymer in the form of insoluble beads. The adsorption of the organic compounds occurs generally, through van der Waal's interactions which result in an adsorption onto the surface of the resin. When the resin capability for adsorption is reached, the sorbate must be removed to allow repeated reuse of the adsorbent. This is accomplished by backwashing with a solvent (acetone, in this case).

Resin adsorption will remove from the aqueous waste stream the remaining 225 metric tons per year of organics, notably the remaining toluene, malathion, and malathion impurities.

The eluted wastes from the resin adsorption column and the toluene layer from the sedimentation process are sent to separate vacuum distillation units. In the toluene vacuum unit, toluene is distilled off and, about 100 metric tons per year of toluene recovered for reuse as solvent back in the malathion process. This toluene is worth approximately $11,500 per year. In the eluted waste column, acetone is distilled off and stored for reuse as the elution agent in the resin adsorption system. The bottoms from the toluene still and the acetone recovery column are composed of 140 metric tons of malathion and 110 metric tons of malathion impurities. Technical grade malathion contains 3 percent impurities,[2] or 420 metric tons per year from a 14,000 metric ton per year plant. Addition of the recovered malathion would raise the impurity level to 3.7 percent. Since malathion is applied as a direct spray onto a field, a water base emulsion, or a petroleum base solution, it is not expected that the slight increase in impurity level will have any effect on malathion effectiveness as an insecticide.

The liquid stream from the resin adsorption column consists of 14,000 metric tons per year of approximately 2 percent sodium hydroxide solution. The water content of this stream is a combination of both the caustic wash stream and the condensate from the steam stripping operation. Assuming that 10 percent of this stream is from the condensate, then this amount may be bled off and the remainder (with a slight addition of sodium hydroxide) reused as wash water. This recycling of the wash water will save some 250 metric tons per year of sodium hydroxide and approximately 12,350 metric tons per year of water. The reuse of this water is possible due to the removal of the organic

wastes by the sedimentation and resin adsorption. The bleed stream, 1,400 metric tons per year, contains 28 metric tons per year of sodium hydroxide as a 2 percent solution. This can be used, with strengthening by additional caustic, for the hydrolysis process to detoxify spent filter cake of waste stream No. 19.

Benefits and Environmental Advantages and Disadvantages. The malathion liquid wastes treatment processes have several benefits over the existing method, these are: (1) elimination of ocean dumping as a means of disposal; (2) recovery of toluene and malathion for reuse in the manufacturing process; (3) total reuse of the water component of the waste stream, either as recycle back in the malathion process or, as a detoxification aid for the spent malathion filter cake, and (4) complete elimination of water and land destined wastes. The environmental disadvantages of the processes are basically that they are energy utilizers. This is due to the steam requirements for distillation and the electrical pumping needs.

Cost Analysis. The cost analysis is based on a plant producing 14,000 KKg per year of malathion operating 24 hours per day and 300 days per year. A summary of capital cost, annual operating cost, and the cost impact for waste treatment follows.

WASTE STREAM NO. 20

1. ESTIMATED INSTALLED CAPITAL COST

BASIS: 47.8 KKg/day of Liquid Wastes

Equipment Item	Estimated Cost
Sedimentation System, including Heated 40,000 ℓ Vessel, Slurry Pumps and Liquid Pumps	$ 112,000
Adsorption System including Pumps and Regeneration to handle 40 ℓ/min	258,000
Distillation System for Acetone Recovery including Pumps, Heat Exchangers and a 30 cm dia x 6 m Column	70,000
Distillation System for Toluene Recovery including Pumps, Heat Exchangers and a 45 cm dia x 6 m Column	80,000
Subtotal	$ 520,000
Engineering at 10%	52,000
Contingency including freight at 20%	104,000
Total Estimated Installed Capital Cost	$ 676,000

WASTE STREAM NO. 20

1. ESTIMATED INSTALLED CAPITAL COST

BASIS: 47.8 KKg/day of Liquid Wastes

Equipment Item	Estimated Cost
Sedimentation System, including Heated 40,000 ℓ Vessel, Slurry Pumps and Liquid Pumps	$ 112,000
Adsorption System including Pumps and Regeneration to handle 40 ℓ/min	258,000
Distillation System for Acetone Recovery including Pumps, Heat Exchangers and a 30 cm dia x 6 m Column	70,000
Distillation System for Toluene Recovery including Pumps, Heat Exchangers and a 45 cm dia x 6 m Column	80,000
Subtotal	$ 520,000
Engineering at 10%	52,000
Contingency including freight at 20%	104,000
Total Estimated Installed Capital Cost	$ 676,000

wastes by the sedimentation and resin adsorption. The bleed stream, 1,400 metric tons per year, contains 28 metric tons per year of sodium hydroxide as a 2 percent solution. This can be used, with strengthening by additional caustic, for the hydrolysis process to detoxify spent filter cake of waste stream No. 19.

Benefits and Environmental Advantages and Disadvantages. The malathion liquid wastes treatment processes have several benefits over the existing method, these are: (1) elimination of ocean dumping as a means of disposal; (2) recovery of toluene and malathion for reuse in the manufacturing process; (3) total reuse of the water component of the waste stream, either as recycle back in the malathion process or, as a detoxification aid for the spent malathion filter cake, and (4) complete elimination of water and land destined wastes. The environmental disadvantages of the processes are basically that they are energy utilizers. This is due to the steam requirements for distillation and the electrical pumping needs.

Cost Analysis. The cost analysis is based on a plant producing 14,000 KKg per year of malathion operating 24 hours per day and 300 days per year. A summary of capital cost, annual operating cost, and the cost impact for waste treatment follows.

Sulfur Sludge From Chlorination Unit - Parathion Manufacture

Waste Stream No. 21

Waste Stream Description. Parathion is an organophosphate insecticide with a typical plant production rate of 20,000 metric tons per year. "The synthesis of parathion, see Figure 5-35, involves (1) the reaction of phosphorus pentosulfide with ethanol to produce diethyl dithiosphosphoric acid, (2) the chlorination of the diethyl dithiophosphoric acid to obtain the product diethyl chlorothiophosphate..."[1]

The first reaction is:

$$4(C_2H_5OH) + P_2S_5 \longrightarrow 2(C_2H_5O)_2\overset{S}{\overset{\|}{P}}SH + H_2S$$

which is carried out at a temperature of 50-100C over a period of several hours. The chlorination is generally carried out at a temperature of 10-40C over several hours and is:

$$(C_2H_5O)_2\overset{S}{\overset{\|}{P}}\text{-}SH + Cl_2 \longrightarrow (C_2H_5O)_2\overset{S}{\overset{\|}{P}}Cl + HCl + S$$

A careful control is kept on the temperature and chlorine ratio to prevent undesirable side reactions. The elemental sulfur which is formed in the chlorinator, is assumed, to appear in the form of "microspheres." These microspheres will tend to encapsulate both the starting material (diethyl dithiophosphoric acid), the chlorination product (diethyl chlorothiophosphate), and other side reaction materials. For a plant producing 20,000 metric tons per year of parathion the sulfur sludge from the chlorinator is 2,300 metric tons per year.

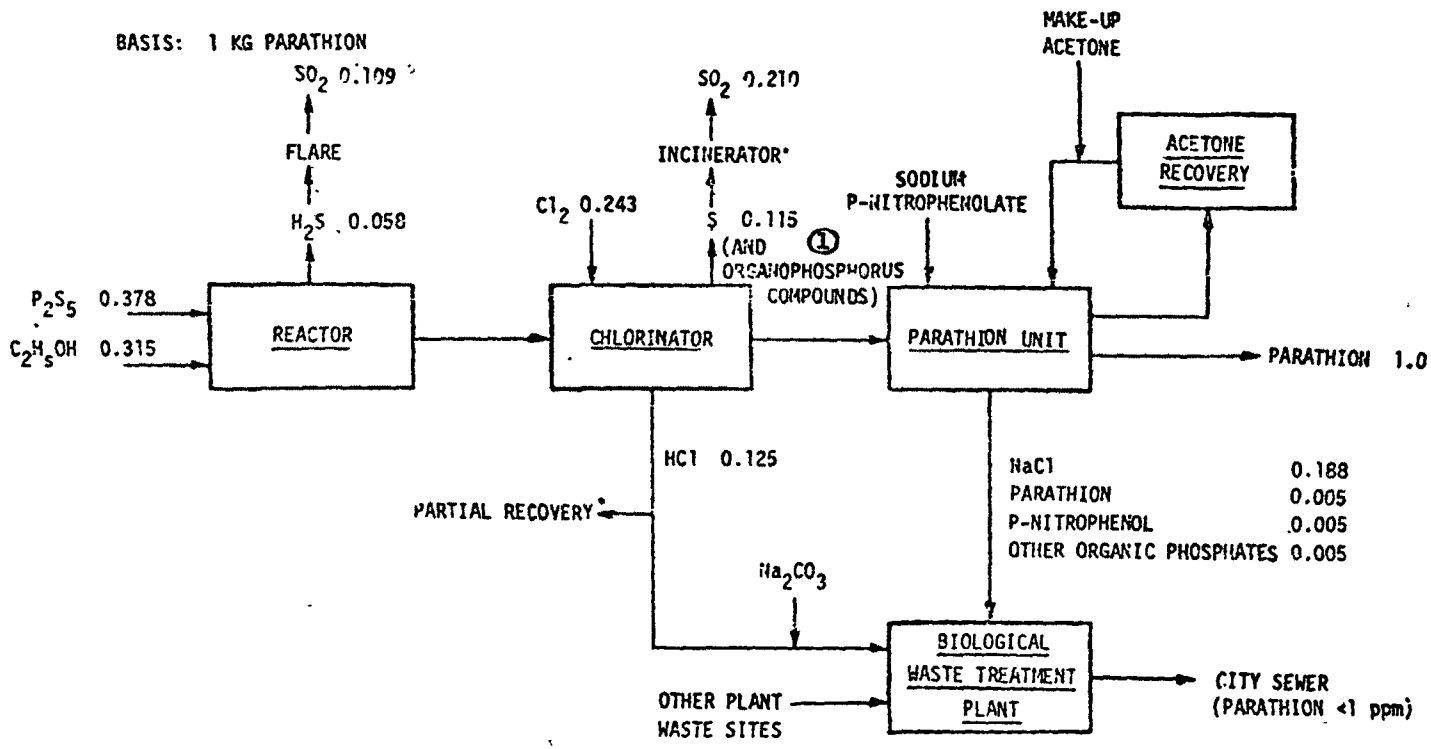

* APPROXIMATELY 80 PERCENT RECOVERY AS 32 PERCENT BY WEIGHT HCl IN WATER

SULFUR SLUDGE FROM CHLORINATION UNIT, ①

WASTE STREAM NO. 21

FIGURE 5-35 PARATHION MANUFACTURE

A sulfur balance[2] indicates that this sulfur sludge is composed of 93 percent (2,140 metric tons per year) elemental sulfur with the remaining 7 percent (160 metric tons per year) being organophosphorus compounds. Because the organophosphorus compounds are toxic, the sludge is classed a potentially hazardous discharge.

Existing Treatment Methods. The present method of disposal of the waste chlorinator sludge from parathion manufacture is incineration without controls for abatement of SO_2 and phosphorus oxide emissions. This results in emissions estimated at approximately 4,000 cfm (based on 300 days per year and 8 hours per day) of which about 20 percent is SO_2. The magnitude of the emissions of SO_2 and phosphorus oxides coupled with the extreme toxicity of the sludge if not incinerated result in a totally unacceptable means of disposal.

Selected Alternative Treatment Processes. Goals established for an alternative treatment were: (1) to separate the sulfur, for recovery purposes, from the organophosphates and (2) to detoxify the organophosphorus compounds. The following sequence of treatment processes (see Figure No. 5-36) can accomplish these purposes: (1) Heated sedimentation; (2) Ultrafiltration; (3) Filtration; (4) Composting with lime and/or limestone.

STREAM NO. 1
FIGURE NO. 5-35
(PROC. FLOW SHEET)

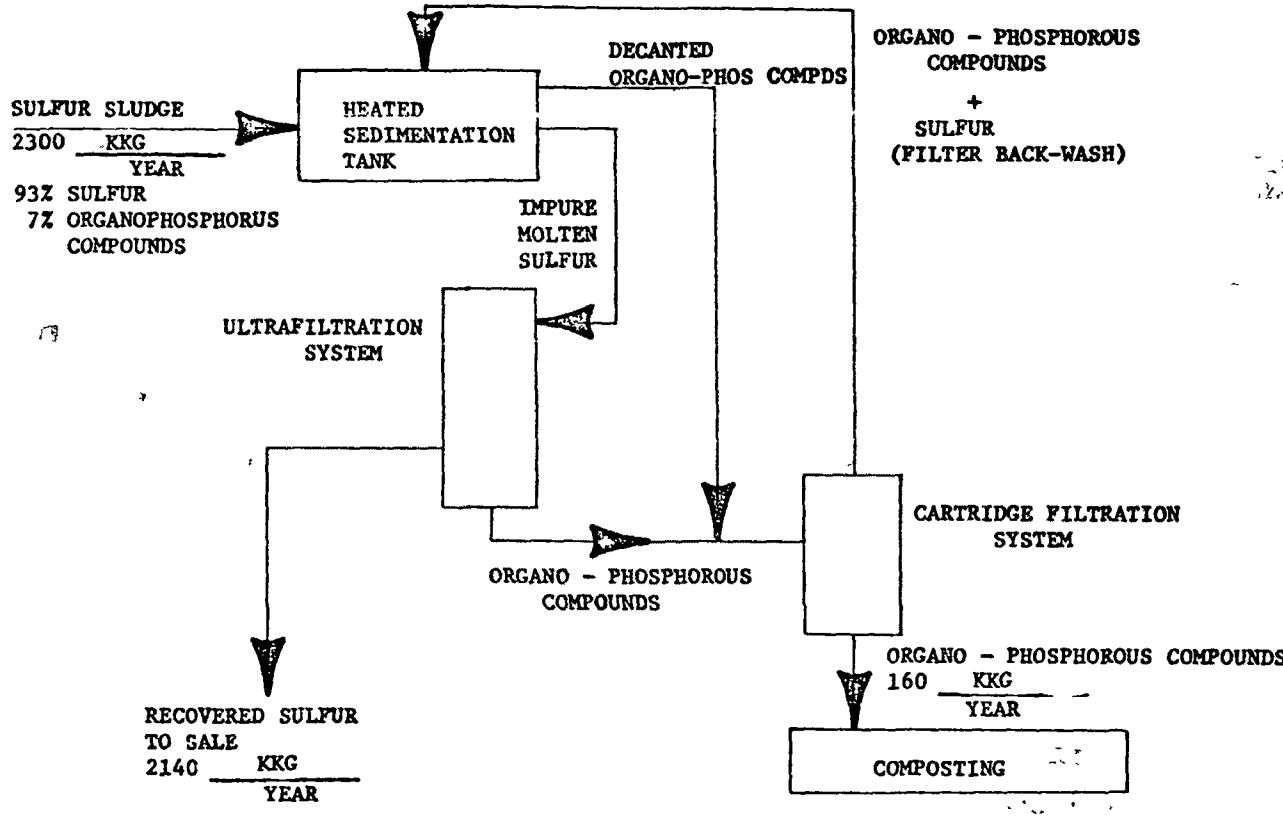

SULFUR SLUDGE FROM CHLORINATION UNIT

PARATHION MANUFACTURE - WASTE STREAM NO. 21

FIGURE NO. 5-36

The sludge from the chlorinator is first sent to a steam heated sedimentation tank. The tank operates at a temperature of about 125C, which is 12C over the melting point of sulfur. The purpose of this tank is to melt the sulfur component of the waste stream and, if the organophosphorus components are insoluble in liquid sulfur, to allow decantation of the insoluble organophosphorus compounds. The liquid sulfur stream from the heated sedimentation tank is next sent to ultrafiltration.

Ultrafiltration is a membrane separation system capable of segregating dissolved or suspended species from a liquid stream on the basis of size.[3] In ultrafiltration, a porous membrane is sized to retain organic compounds of molecular weight 150 and greater while allowing liquid sulfur to pass through has a hydrostatic pressure of up to 10 atmospheres applied to the upstream side of the supported membrane. A concentrated fluid of the large molecules (organophosphates) is collected on the upstream side of the membrane while the smaller molecule liquid sulfur, having passed through the membrane, is collected on the downstream side of the membrane. It should be noted however that almost all the work on ultrafiltration has been with aqueous solutions. Extensive research and development work would be required to determine workability of ultrafiltration with liquid sulfur.

The concentrated organophosphorus stream from ultrafiltration and sedimentation is cooled down to ambient temperatures which will allow any retained sulfur to resolidify. The cooled stream is next refiltered by use of a cartridge type filter to remove the retained sulfur and "polish" the organophosphorus

stream. The cartridge filter is cleaned by backflushing with organophosphorus solution, and this backflush stream is sent back to the heated sedimentation tank. In this way it is assured that negligible amounts of sulfur exit with the organophosphorus stream.

The concentrated molten sulfur stream exits onto a trough type conveyor with cooling coils where it is "cast" into a solid and discharged in solid form for sale.

The organophosphorus compounds (amounting to 160 metric tons per year) would be sent to composting for final disposal. In the composting area, these organophosphorus compounds are mixed with lime at the time of composting. This lime causes a partial detoxification by the reaction:

$$2(C_2H_5O)_2\overset{S}{\overset{\|}{P}}SH + Ca(OH)_2 \longrightarrow Ca(SH)_2 + 2(C_2H_5O)_2\overset{S}{\overset{\|}{P}}\text{-}OH$$

which (in this case) forms diethyl thiophosphoric acid. The remaining detoxification occurs over a period of time due to exposure to air degradation and bacterial action. For details of basis for estimating composting, see Waste Stream 12.

<u>Benefits, Environmental Advantages and Disadvantages</u>. The benefits of the proposed alternative treatment processes are:

1. Recovery of over 2,000 metric tons per year of sulfur for sale.

2. Reduction of final treatment stream to 160 metric tons per year (a 93 percent weight reduction).

3. Exchange of a "final" form of treatment (incineration), which is also energy intensive, with a "regenerative" form of treatment (composting).

The environmental advantages of this alternative treatment process are the elimination of incineration as a means of disposal. Besides requiring a great deal of energy; incineration of this much sulfur would require extensive air pollution control methods, most probably in the form of a lime/limestone scrubbing system. Such a scrubber will produce extensive water pollution and land disposal problems with regard to the scrubber water and the dewatered scrubber sludge, respectively.

The environmental disadvantage of the alternative treatment processes is that composting of organophosphorus compounds can be quite difficult. Additional time for the organophosphorus compounds to decompose in the composting area may be necessary to ensure complete detoxification.

Cost Analysis. The cost analysis is based on a plant producing 20,000 KKg per year of parathion operating 24 hours per day and 300 days per year. A summary of capital cost, annual operating cost, and the cost impact for waste treatment follows.

WASTE STREAM NO. 21

1. ESTIMATED INSTALLED CAPITAL COST

BASIS: 7.67 KKg/Day of Sulfur Sludge

Equipment Item		Estimated Cost
Sludge Pump	3 ℓ/min	$ 14,600
Sedimentation Tank	6,000 ℓ	45,700
Sulfur Pump	9 ℓ/min	8,900
Ultrafiltration System	10 ℓ/min	4,400
Organophosphorus Pump	2 ℓ/min	13,100
Sulfur Pump	8 ℓ/min	8,900
Cartridge Filter	2 ℓ/min	13,100
Sulfur Conveyors	900 kg/hr	44,000
Organophosphorus Storage Tank	2500 ℓ	14,600

Subtotal	$ 167,000
Engineering @ 10%	16,700
Contingency including freight @ 20%	33,400
Total	$ 216,100

2. ANNUAL FIXED CHARGES

Depreciation $216,100 @ 10%/yr		$ 21,600
Interest $216,100 @ 10%/yr		21,600
Insurance and Taxes $216,100 @ 4%/yr		8,600
Total Annual Fixed Charges		51,800

3. DIRECT OPERATING COST

Raw Material		
Utilities	$ 94,800	
Maintenance 0.04 x 216,100	8,600	
Direct Labor 7200 x 9.0 x 1.5	97,200	
Annual Direct Operating Cost		$ 200,600
Annual Composting and Leachate 160 KKg x 9.0 per KKg		1,500
Total Annual Cost		$ 253,900
Recovered Materials Sulfur @ 58.00/KKg 58 x 0.7 = 40.60 x 2140 KKg		-86,900
Net Total Annual Cost		$ 167,000

4. COST PER KKg PRODUCT $167,000 ÷ 20,000 KKg $ 8.35

5. COST PER KKg WASTE $167,000 ÷ 2,300 KKg $ 73.

6. IMPACT ON PRODUCT COST

(Market value of 1 KKg product = $1,918)

Cost/KKg ÷ Market value/KKg = $8.35 ÷ $1,918 0.44%

REFERENCES

1. TRW Systems Group, Assessment of Industrial Hazardous Waste Practices. Organic Chemicals, Pesticides and Explosives Industries, EPA Contract 68-01-2919, Page 5-97.

2. TRW Systems Group, Assessment of Industrial Hazardous Waste Practices. Organic Chemicals, Pesticides and Explosives Industries, EPA Contract 68-01-2919, Page 5-99.

3. Arthur D. Little, Inc., Analysis of Potential Application of Physical, Chemical, and Biological Treatment Techniques to Hazardous Waste Management, Cambridge, Mass. EPA Contract 68-01-3554, Ultrafiltration Section, Page 1.

Spent Activated Carbon - Explosives Manufacture

Waste Stream No. 22

Waste Stream Description. In the manufacture and handling of TNT and other nitrated aromatic explosives, a variety of pollutants is generated, two general classes of which are considered in this report. The first is "red water", which is a 3 to 35 percent solids aqueous effluent produced by the purification of TNT by the sellits process. Although the exact composition of red water is not known, it is believed to contain sulfite salts, asymmetrical isomers of TNT, and isomers of DNT (dinitrotoluene). Upon exposure to sunlight, the initially colorless solution assumes a deep red appearance. Red water, when indiscriminately discharged into local streams would clearly present a serious pollution problem.

"Pink water", a less concentrated form of "red water", is also photochemically active and is primarily the result of the 2, 4, 6 isomer of TNT dissolved in water. Pink water is generated principally from the washdown of equipment and facilities at Load/Assembly/Pack (LAP) plants, and from the concentration of red water in multiple effect evaporators (as practiced for example at the Joliet Army Ammunition Plant) where the evaporator condensate is contaminated with TNT waste products.

Adsorption onto activated carbon has been shown to be an effective means by which the concentration of TNT in "pink" water from LAP plant washdown and from evaporator condensate can be reduced from as high as 300 ppm to an acceptable level of less than 1 ppm. Both the Joliet AAP and the Iowa AAP currently employ

carbon adsorption processes as integral parts of wastewater treatment facilities on LAP production lines, and the[2] Joliet AAP is in the process of installing an activated carbon treatment system for their red water evaporator condensate.[1] The projected future applications of activated carbon at each of the above-mentioned plants may require the consumption of one ton or more of carbon per day at each plant.

Existing Treatment Methods. At present, the spent TNT saturated carbon at both the Joliet and Iowa AAP is being disposed of by open burning; a process which, due to the nature of the material burned, results in the formation of considerable amounts of NO_x and particulate emissions. The conversion of water-borne to airborne pollutants is not an acceptable method of pollution abatement. Open burning is also a costly process since no further utilization of the carbon, either for adsorption or as an energy source, is made.[3]

There is, at this date, no industrial installation in operation for regeneration of explosive saturated carbon.

Selected Alternative Treatment Processes. Alternative treatment processes for disposal of explosive saturated spent activated carbon must fulfill the following criteria: (1) safety of operating personnel; (2) environmentally acceptable emissions; (3) ease of disposal of final waste products. Based on these criteria, two treatment systems have been selected for consideration and analysis. The first is solvent regeneration, whereby the carbon is backwashed with a suitable solvent, and the adsorbed nitrated aromatic explosive is stripped off. The regenerated carbon would then be reused and the effluent solvent would be distilled and also reused in subsequent regenerations. The still bottoms

would be either processed for recovery of any marketable values, or more probably incinerated under closely controlled conditions. The second alternative is thermal regeneration where the spent carbon would be removed from the column to a furnace and heated in an oxygen-poor atmosphere. The adsorbed material would be desorbed via its own thermal decomposition after which the carbon would be quenched and returned to the adsorption column for reuse.[1] Laboratory studies have already been made using the above methods of treatment. Among these are: (1) a bench scale study of the regeneration of TNT laden activated carbon with toluene performed at the chemical laboratory, Edgewood Arsenal; (2) a pilot plant scale study of the solvent regeneration performed by Iowa AAP; (3) a study of the thermal regeneration of carbon by a fluidized bed furnace performed jointly by Esso Research and Iowa AAP.

Thermal regeneration appears to be the more promising of the two spent carbon processing systems and is the system pursued in this report. A TNT batch operation consisting of six lines and producing 308 KKg/d (92,400 KKg/yr) is used as the standard plant size for this study. A flow diagram of the process is given in Figure No. 5-37.

Benefits and Environmental Advantages and Disadvantages of Thermal Regeneration Compared With Total Incineration

1. Advantages. The regenerated carbon recovers 50 percent of the activity value of the reused carbon, and eliminates the disposal problem of spent carbon. The only solid waste being 25 Kg of ash per day. Environmentally, both the controlled incineration and carbon regeneration processes will emit no pollution stream. (Processing of the scrubber wastes is not covered in this report.)

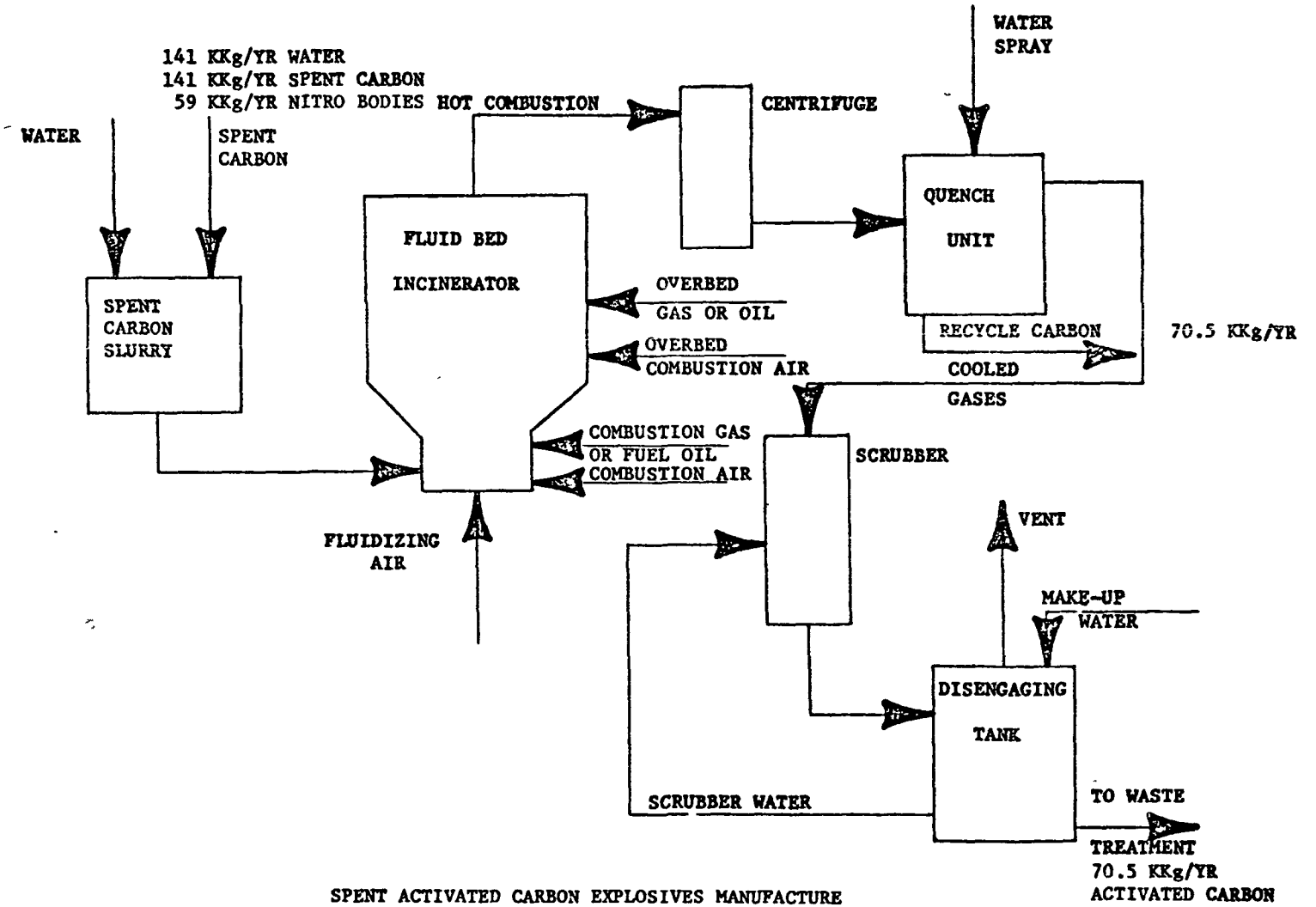

SPENT ACTIVATED CARBON EXPLOSIVES MANUFACTURE

WASTE STREAM NO. 22

FIGURE NO. 5-37

2. Disadvantages

a. The regenerated carbon is only 50 percent as efficient as the original activated carbon.

b. The regeneration process causes an attrition loss of 50 percent of the spent carbon feed.

Cost Analysis. The cost analysis is based on a plant producing 93,000 KKg per year of TNT operating 24 hours per day and 300 days per year. A summary of capital cost, annual operating cost, and the cost impact for waste treatment follows.

WASTE STREAM NO. 22

1. ESTIMATED INSTALLED CAPITAL COST

BASIS: 0.47 KKg/Day of Spent Carbon

Equipment Item	Size	Estimated Cost
Fluid Bed Incinerator	1.52 M dia	$ 365,000
Packed Scrubber	45.7 cm dia	32,300
Blower	5.6 KW	8,900
Pump	38 ℓ/min	6,700
Stack	25 cm dia x 30 M	6,700
Drum Storage	350-200 ℓ Drums	8,800
Hopper	380 ℓ	24,400
Rotary Feeder	0.4 KW	1,800
Three Screw Conveyors	1.5 KW Each	96,300
Quench Tank	380 ℓ	24,400
Storage Bin	3800 ℓ	27,600
Subtotal		$ 602,900
Engineering @ 10%		60,300
Contingency including freight @ 20%		120,600
Total		$ 783,800

WASTE STREAM NO. 22

2. ANNUAL FIXED CHARGES

Depreciation	$783,800 @ 10%/year	$ 78,400
Interest	$783,800 @ 10%/year	78,400
Insurance and Taxes	$783,800 @ 4%/year	31,400
Total Annual Fixed Charges		$ 188,200

3. DIRECT OPERATING COST

Raw Material		
Utilities	$ 8,800	
Maintenance 0.04 x 783,800	31,400	
Direct Labor 1200 MH x 9.00 x 1.5	16,200	
Annual Direct Operating Cost		$ 56,400
Annual Disposal Cost		0
Total Annual Cost		$ 244,600
Recovered Materials: Activated Carbon 70.5 KKg x 1102/KKg x 0.7		-54,400
Net Total Annual Cost		$ 190,200

4. COST PER KKg PRODUCT $ 190,200 ÷ 93,000 $ 2.05

5. COST PER KKg WASTE (Wet Basis) $190,200 ÷ 341 $951.
(Dry Basis) $190,200 ÷ 200 $558.

6. IMPACT ON PRODUCT COST

(Market value of 1 KKg product = NA)

Cost/KKg ÷ Market value/KKg = NA

REFERENCES

1. Draft Copy of Economic Evaluation of the Solvent and Thermal Regeneration of TNT Laden Activated Carbon - 1st Lieutenant Donald F. Dustin, Edgewood Arsenal, Aberdeen Proving Ground, Maryland - April 1975.

2. TNT Industrial Waste Treatment - WPC FY-73, MCA, Line Item 25 Joliet AAP, Joliet, Illinois.

3. J.L. Rizzo - Manager Filtrasorb Department - Calgon Corporation - Telephone Communication. September 1976.

4. Illinois Water Treatment Co. Project #1073 Report for A.M. Kinney, Inc., September 13, 1976.

5. Illinois Water Treatment Co. Project #1073 Report for A.M. Kinney, Inc., May 14, 1975.

6. Advanced Wastewater Treatment Seminar Manual, by Culp. Wesner, Culp, and Benjes (pages 4-33) October 1975.

7. Telephone Conversation with Walker Process Division, Chicago Bridge and Iron (Bruce Russard August 14, 1973).

Red Water - Explosives Manufacture

Waste Stream No. 23

Waste Stream Description. The purification of crude TNT by neutralization with soda ash and washing with sellite (a solution of sodium sulfite) results in the generation of an alkaline red colored aqueous waste containing TNT impurities (sodium salts of dinitrotoluenesulfonic acids) and other organic and inorganic salts. See Figure 5-38. The red water from batch TNT production is considerably more dilute than that from the new continuous TNT lines (3 to 5 percent vs. 30 to 35 percent solids).[1]

Red water[2] is alkaline, with a pH of approximately 8.0, and is practically odorless. Red water from batch TNT production contains from 100,000 to 300,000 ppm of color bodies, whereas that from continuous TNT lines (Radford AAP) contains up to 9 percent (90,000 ppm) of color producing nitrobodies.* The color intensity in TNT waste streams increases with increase of pH, light intensity, temperature, chemical dosages, and time of exposure to the above variables. Essentially, the result is the color in red water.[4]

Existing Treatment Methods[1]. Currently the production rate of TNT is low with a resultant relatively small quantity of red water produced. This is now disposed of through sale to Kraft pulp mills. Because of the small market, this method of disposal is viewed as only a temporary solution. Under full production conditions, the red water generated is normally disposed of by incineration.

*A nitrobody is any organic nitrated by-product from an explosives manufacturing operation.

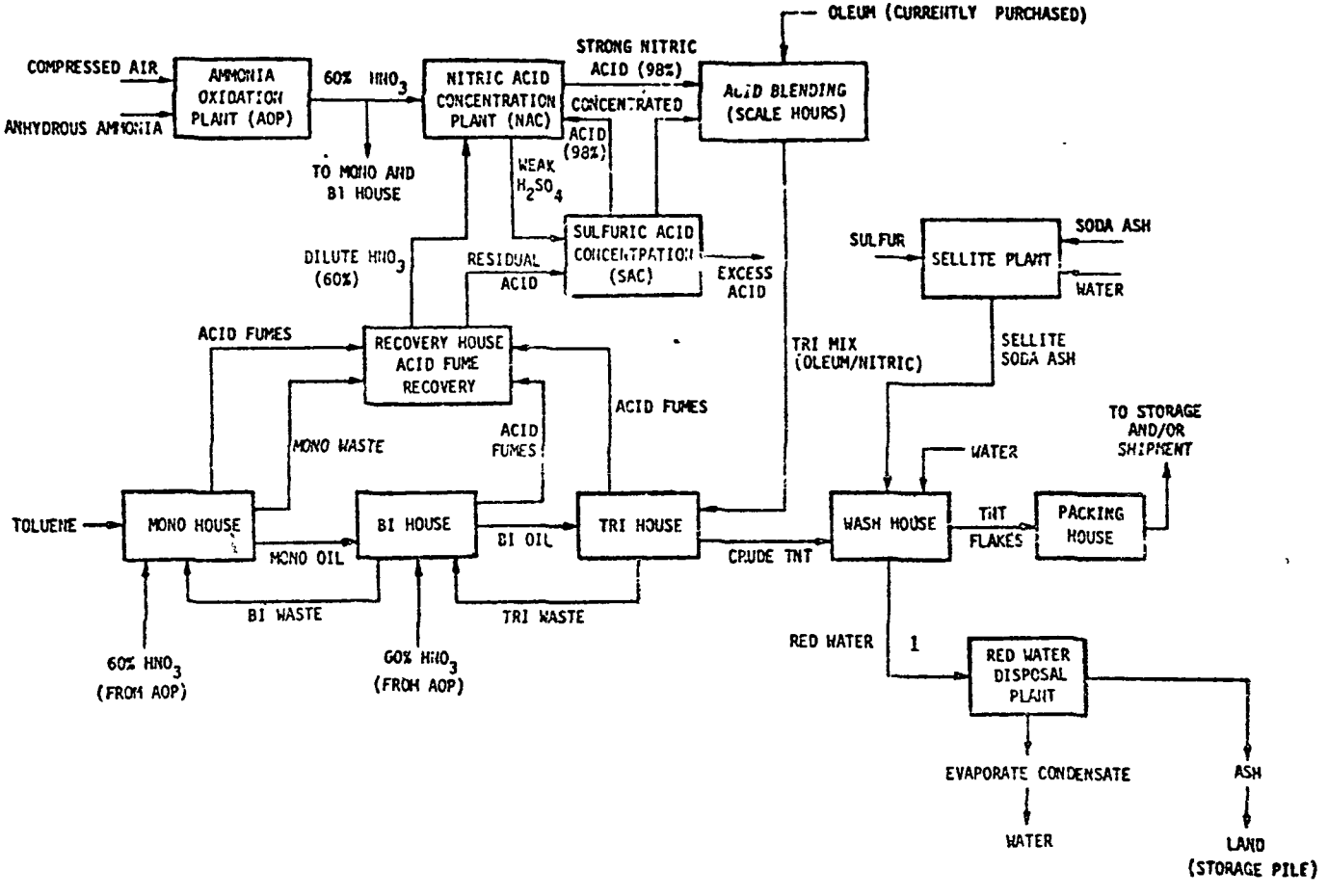

RED WATER

WASTE STREAM NO. 23

FIGURE 5-38 BATCH PROCESS TNT MANUFACTURING AND SATELLITE OPERATIONS

The batch TNT process red water is neutralized with sulfuric acid, concentrated by evaporation, and the concentrate incinerated in a rotary kiln. (See Figure No. 5-39). Red water from continuous TNT process (Radford AAP) is fed to a concentrator evaporator to increase the solids to 40 percent and then to a rotary kiln for incineration.

Since the quantity of ash produced is significant (0.19 kilogram p kilogram of TNT manufactured) large piles of ash have accumulated at some TNT production sites. At one plant the ash has been disposed of by land burial.[1]

Because of the environmental inadequacies of the disposal methods, a considerable amount of effort is directed toward developing methods for the utilization and recycle of red water ash.

Selected Alternate Treatment Process. Alternate treatment processes for disposal of red water must fulfill the following criteria:

1. Safety of operating personnel; 2. Environmentally acceptable emissions: 3. Ease of disposal of final waste products.

Based on the above criteria, several treatment systems were considered, including a fluid bed reactor reduction process, the Tampella process, and a red water acidification process.[1]

In fluidized bed reduction the ash resulting from red water incineration is ground and reacted with carbon monoxide which also serves to fluidize the solids. Carbon monoxide is generated by reacting coke with carbon dioxide. The process produces sodium carbonate and H_2S which can be used (after conversion of H_2S to SO_2) to produce sellite solution for recycling. The fluidized bed reduction process has been evaluated in laboratory bench-scale tests.

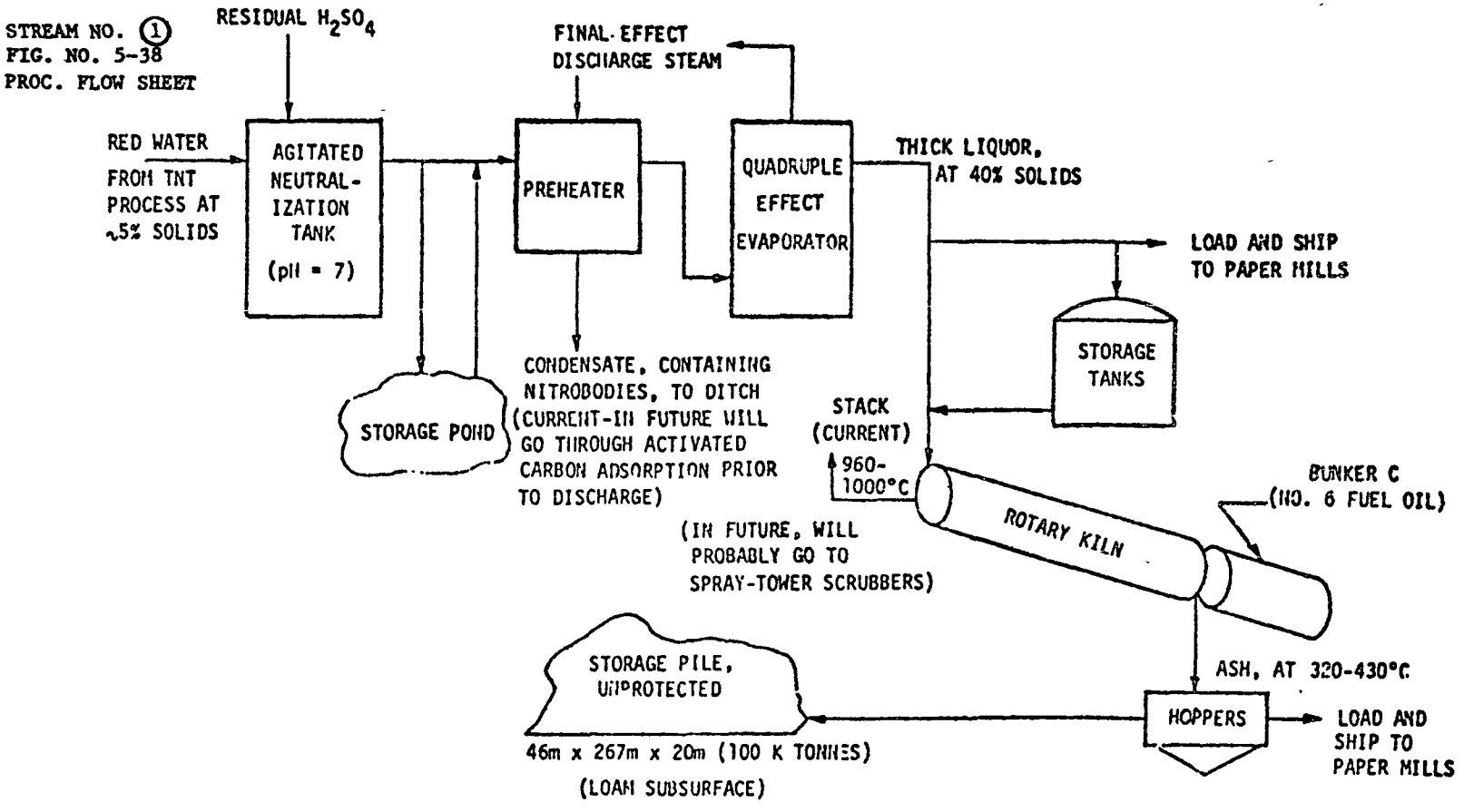

RED WATER WASTE DISPOSAL PROCESS (JOLIET AAP)

WASTE STREAM NO. 23

FIGURE NO. 5-39

In the Tampella process, pulverized coal is added to the concentrated red water and the mixture is incinerated to produce a sodium carbonate smelt plus gaseous hydrogen sulfide; these are used to produce sellite for recycling. This process has been tested in pilot-plant studies. (See Figure No. 5-40)

In red water acidification, the wastewater pH is lowered by the addition of acid. Steam is then added to convert the nitrotoluene sulfonates in the red water to such useful compounds as diaminotoluene and dinitrotoluene. The red water acidification process is in the laboratory bench-scale evaluation stage.

Of the three systems the Tampella process appears to be the most promising and has been selected as the alternate treatment process.

Benefits and Environmental Advantages and Disadvantages. The Tampella process is superior to the existing rotary kiln incineration process in the following respects:

1. Recovery of Resource Material. Essentially all of the original sellite in the TNT wash is dissociated in the incineration stage (possibly) and recombined as follows:

(Eq 1) $Na_2SO_3 + \text{Heat} \longrightarrow Na_2O + SO_2\uparrow$

(Eq 2) $Na_2O + CO_2$ (from coal combustion) $\longrightarrow Na_2CO_3$

(Eq 3) $Na_2CO_3 + SO_2$ (from Eq 1) $\longrightarrow Na_2SO_3$

$\downarrow$ Water

Sellite solution which is returned to the TNT plant. The salvage value of the recovered sodium sulfite is about

STREAM NO. 1
FIG. NO. 5-38
(PROC. FLOW SHEET)

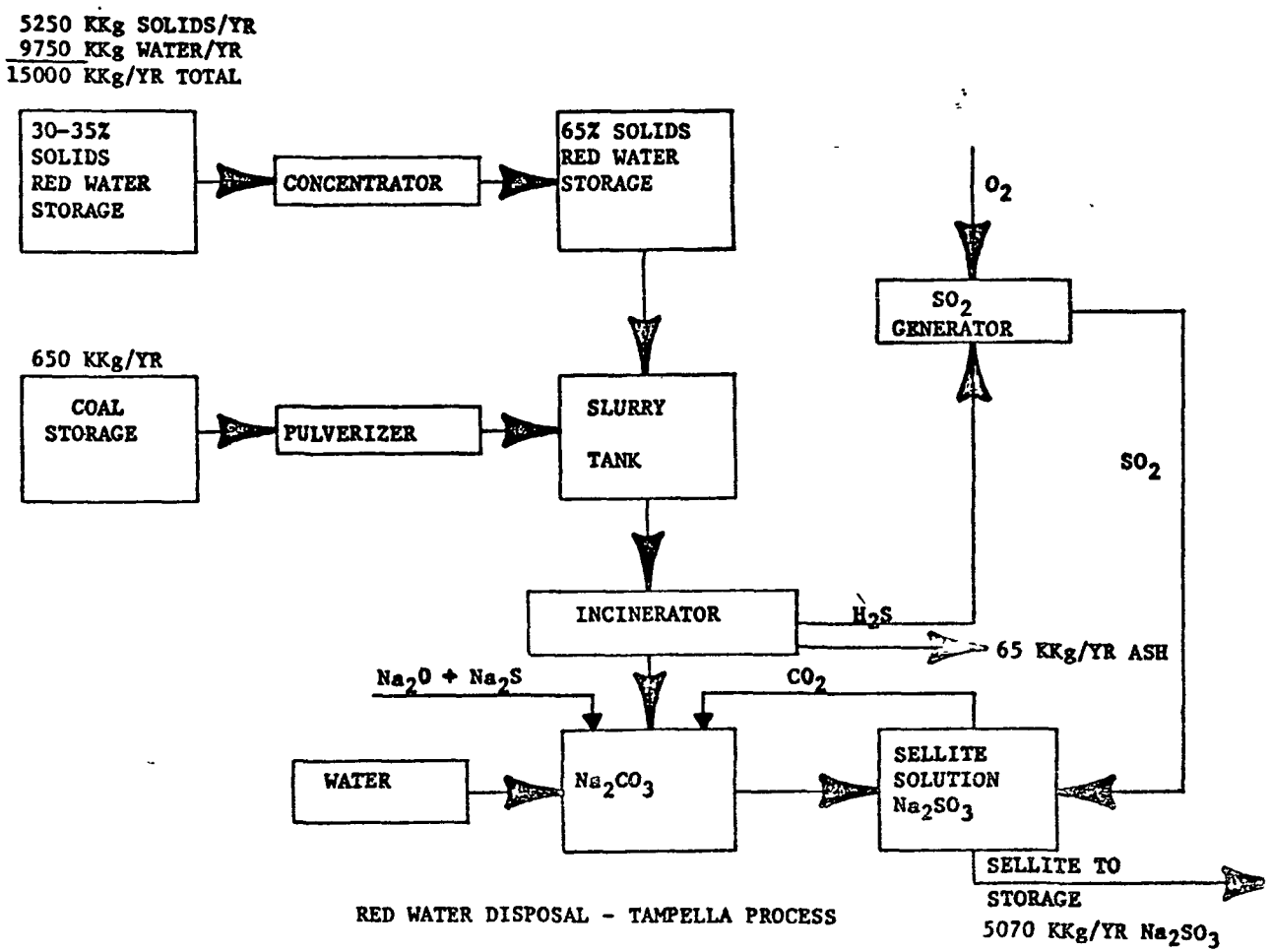

RED WATER DISPOSAL - TAMPELLA PROCESS

WASTE STREAM NO. 23

FIGURE NO. 5-40

$800,000. In existing incineration, the sodium sulfate crude salt cake is sold for a low price or else must be deposited in a chemical landfill.

2. Waste gases will be scrubbed to eliminate possible NO_x pollution of the atmosphere. This is also being done at the arsenals.

3. The total solid waste expected to be removed to landfill is approximately 220 kg of coal ash per day.

Cost Analysis. The cost analysis is based on a plant producing 30,000 KKg per year of TNT operating 24 hours per day and 300 days per year. A summary of capital cost, annual operating cost, and the cost impact for waste treatment follows.

WASTE STREAM NO. 23

1. ESTIMATED INSTALLED CAPITAL COST

BASIS: 50 KKg/Day of Red Water

Equipment Item	Estimated Cost
Tampella Process Installed [3]	$ 10,000,000
Subtotal	$ 10,000,000
Engineering at 10%	1,000,000
Contingency including freight at 20%	2,000,000
Total Estimated Installed Capital Cost	$ 13,000,000

WASTE STREAM NO. 23

2. ANNUAL FIXED CHARGES

Depreciation	$ 13,000,000 @ 10%/year	$ 1,300,000
Interest	$ 13,000,000 @ 10%/year	1,300,000
Insurance and Taxes	$ 13,000,000 @ 4%/year	520,000
Total Annual Fixed Charges		$ 3,120,000

3. DIRECT OPERATING COST

Raw Material		
Utilities	$ 110,200	
Maintenance 0.04 x 13,000,000	520,000	
Direct Labor 16,200 MH x 9.00 x 1.5	218,700	
Annual Direct Operating Cost		$ 848,900
Annual Disposal Cost, 66 KKg/year		Insignificant
Total Annual Cost		$3,968,900
Recovered Materials: Sodium Sulfite 5070 KKg @ $220/KKg x 0.7		- 780,800
Net Total Annual Cost		$3,188,100

4. COST PER KKg PRODUCT $ 3,188,100 ÷ 30,000 — $ 106.

5. COST PER KKg WASTE $ 3,188,100 ÷ 15,000 — $ 213.

6. IMPACT ON PRODUCT COST

(market value of 1 KKg product = NA)

Cost/KKg ÷ Market value/KKg = NA

REFERENCES

1. TRW Systems Group, Assessment of Industrial Hazardous Waste Practices: Organic Chemicals, Pesticides and Explosive Industries. SW-118C report.

2. S. Schott, C. C. Ruchoft, and S. Migrigan TNT Wastes, Industrial & Engineering Chemistry - October 1943.

3. Personal Conversation. A. H. Zipperstein, Processes Research, Inc., to A. Carotti, Picatinny Arsenal, September 8, 1976.

4. Nay, Marshall W., Jr., C. W. Randall, and P. H. King. Factors Affecting Color Development During Treatment of TNT Waste. Presented at 27th Annual Purdue Industrial Waste Conference Purdue University, Lafayette, Indiana May 2-4, 1972.

Waste Explosives - Waste Stream No. 24

Waste Stream Description. Explosives and propellants are manufactured by the United States Government for the military in arsenals and ammunition plants, and by private industry for commercial blasting purposes.

In 1973, waste explosives from GOCO (Government Owned-Contractor Operated) plants amounted to 19,850 metric tons (MT) on a dry basis, and from all private industry 5000 MT on a wet basis. This wet basis, the characteristic condition of most private industry explosives wastes, relates to the dry basis on a 3.17 to 1 ratio. That is, wet basis/dry basis = 3.17. The waste explosives rate is related to explosives production rate at a ratio of .003kg waste/kg product for high explosives, and .001 kg waste/kg product for blasting agents.[1] These ratios, on a dry basis, hold true for both GOCO and private industry manufacturing processes.

The wastes are, for the most part, obsolete or off specification items and include:

Nitrocellulose. A mixture obtained by nitrating cellulose. The conditions of acid concentration, temperature, and time of nitration vary depending on the type of nitrocellulose desired.

Ammonium Picrate ($C_6H_2ONH_4(NO_2)_3$). Produced by ammonia neutralization of picric acid in water.

Diazodinitrophenal (DDNP). Results from the reaction of picramic acid with sodium nitrite and hydrochloric acid.

Dinitrotoluene (DNT) and Trinitrotoluene (TNT). Both are manufactured

by the stepwise nitration of toluene with mixed acids (nitric and sulfuric, and nitric and oleum).

Pentaerythritol-Tetranitrate (PETN) and Dipentaerythritol-Hexanitrate (DPEHN). Prepared by nitrating, without sulfuric acid, pentaerythritol and di-pentaerythritol respectively.

Lead Azide. Obtained by reacting lead nitrate with sodium azide.

Nitroglycerin (NG). Manufactured in a similar process to T.N.T., that is the reaction of glycerin with mixed nitric and sulfuric acids.

Existing Treatment Methods. The Level I and Level II technologies for disposal of waste explosives consist of open burning in a safe area. This open burning, for the most part, consists of placing the waste high explosives and detonators on either a noncombustible pad or in a burning pit. These wastes are then covered with a flammable material such as fuel oil or straw and remotely ignited with a squib or blasting cap. The practice is not environmentally acceptable since the uncontrolled air emissions will contain particulates, NO_x, and other compounds. In addition to this unburned explosives remaining after combustion are a danger to personnel during cleanup operations.

Selected Alternative Treatment Processes. It is essential that the alternative treatment processes for disposal of waste explosives fulfill several criteria. These are: (1) safety of operating personnel; (2) environmentally acceptable emission; (3) ease of disposal of final waste products.

Based on these criteria, two treatment process trains have been selected for analysis. These are: (1) wet grinding, wet oxidation and sewage treatment

(aerobic and anaerobic); (2) wet grinding, chemical reduction, filtration and/or evaporation and calcination.

Train 1. Wet Grinding, Wet Oxidation and Sewage Treatment. See Figure 5-41. Since most explosives are shock sensitive and come in cast or bulk form, wet grinding is a necessary step which must be undergone in treating this hazardous waste. In an automated or remote control wet grinding system, waste explosives are passed through a metal detection and removal device where stray pieces of metal are removed. The explosive is then conveyed into a blade type grinder where it is simultaneously mixed with water and ground into small particles. The ground up wet explosive is then transferred to a mixing vessel (usually the grinder is located directly on top of the mixing vessel) where additional water is added to form a suspension of explosive particles in water.

From the mixing tank, the explosive slurry is sent to a wet oxidation unit where air is injected into the slurry and, with the unit under pressure, the explosive slurry burns autogenically. A destruction of 80 to 90 percent on a COD/TOC basis has been reported,[2] and recovery of some portion of the heat generated during wet oxidation should be quite possible, since high pressure steam is being generated in the oxidation unit. This high pressure steam could power a turbine for production of electricity. The bulk of the condensate could be returned to the wet grinding operation with a bleed stream combined with the oxidation reactor effluent and sent to a conventional sewage treatment plant.[2]

The liquid effluent from the wet oxidation process, containing only 3 to 10 percent of the inlet organic concentration on a COD/TOC basis and 10 to 25

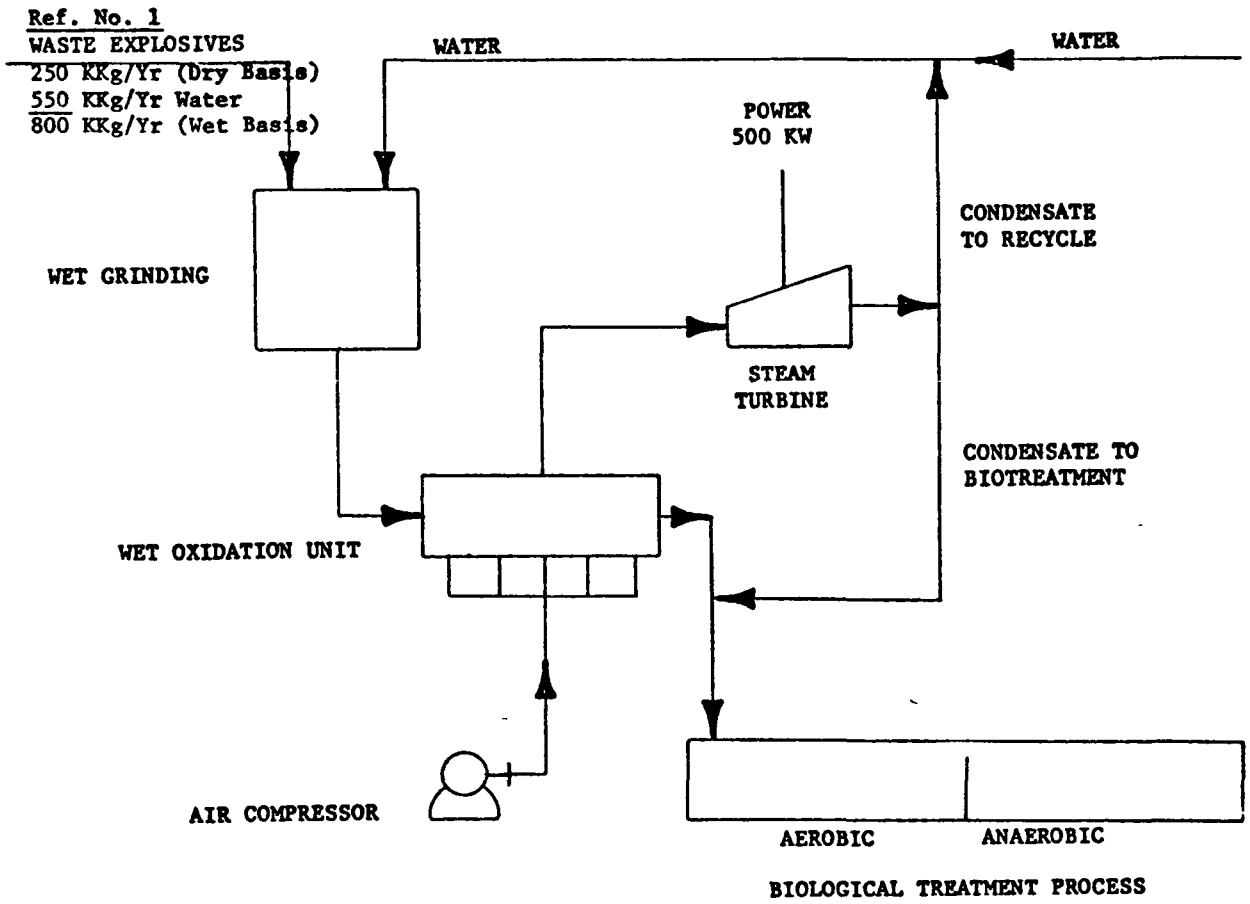

TRAIN 1
(WET GRINDING-WET OXIDATION)

EXPLOSIVES MANUFACTURE - WASTE EXPLOSIVES

WASTE STREAM NO. 24

FIGURE NO. 5-41

percent of the inlet nitrogen as either nitrates or ammonia, is also sent to the sewage treatment process. The latter involved aerobic treatment for conversion of the organic carbon to CO_2 followed by anaerobic treatment to convert first the ammonia to nitrates and then the nitrates to N_2[3]. This three sludge system, Figures 5-42 through 5-44 allows management of the separate biological transformations which are necessary for successful denitrification. The high rate system handles the bulk of the carbonaceous removal and, at this station, the waste activated sludge is removed. Thus, the nitrification stage receives a predominantly ammonia nitrogen feed and an enriched culture develops because each system has its own sludge recycle. This process design also has other desirable features. The high rate system protects subsequent nitrification stages from any toxic chemicals which might escape the oxidation process. Heavy metals, cyanides, thiocyanates, and toxic organic chemicals will either be sorbed or biologically degraded before they reached the nitrification stage. Since this is a staged system, there can be no direct short circuiting of materials from the influent to the effluent. Temperature effects on the enriched culture of the nitrification stage are not as extreme as with a single sludge system which contains only a marginal population of nitrifying organisms.

Once controlled nitrification has been established the biological denitrification process can be optimized. The nitirifed effluent flows to a stirred anaerobic reactor where methyl alcohol is added in proportion to the nitrate

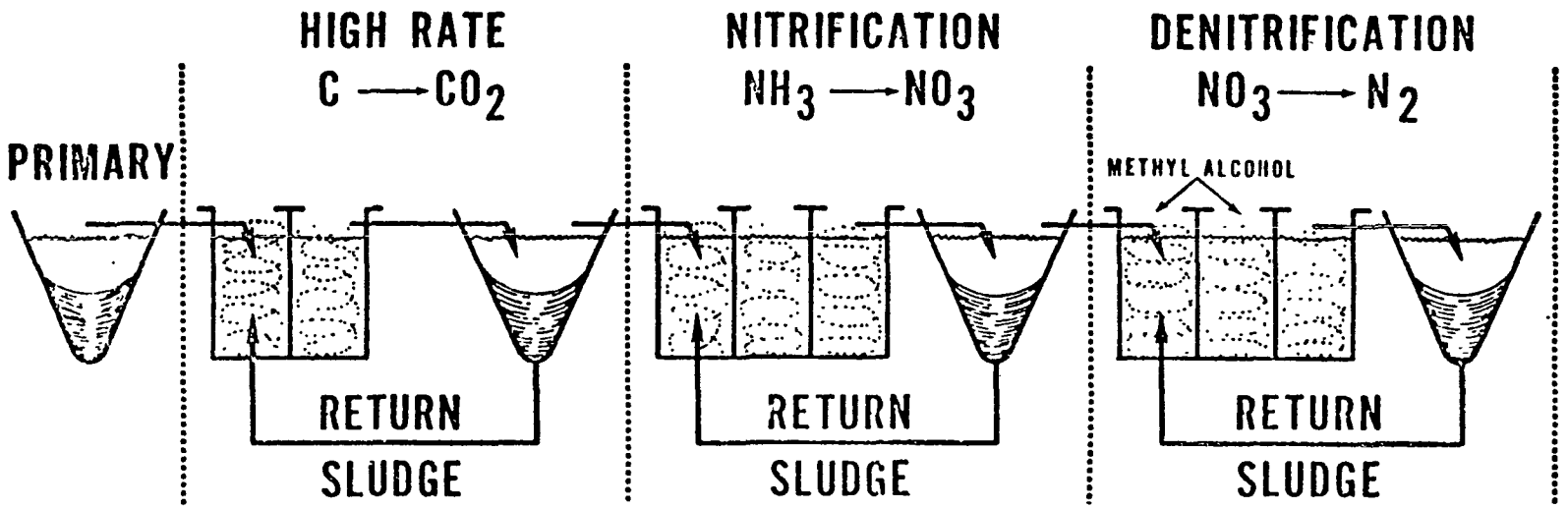

THREE SLUDGE SYSTEM FOR NITROGEN REMOVAL

FIGURE NO. 5-42

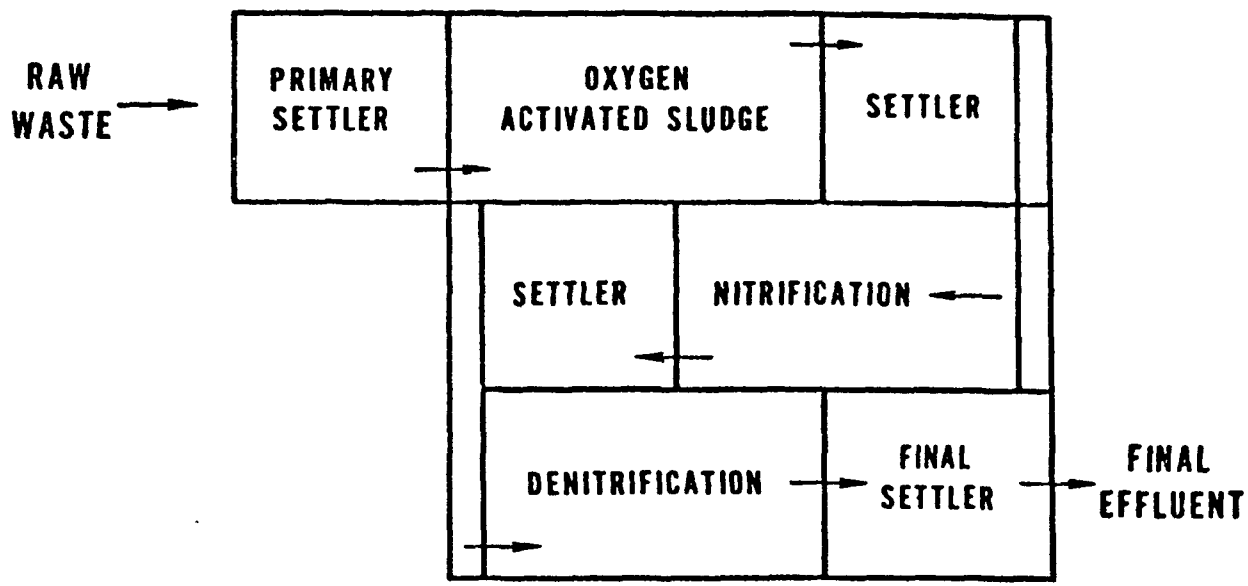

COMMON WALL CONSTRUCTION OF 3-SLUDGE SYSTEM

FIGURE NO. 5-43

MAJOR PROCESS FUNCTIONS	REMOVE SETTLEABLE SOLIDS AND PARTICULATE COD	REMOVE BULK OF SOLUBLE ORGANICS AND PRECIPITATE PHOSPHORUS	CONVERT NH_3 TO NO_3	CONVERT NO_3 TO NITROGEN GAS AND CO_2 AND FURTHER REDUCE PHOSPHORUS
CHEMICAL ADDITIVES	NONE	SODIUM ALUMINATE	NONE	SODIUM ALUMINATE AND METHYL ALCOHOL
Unit	Primary	High-Rate	Nitrification	Denitrification

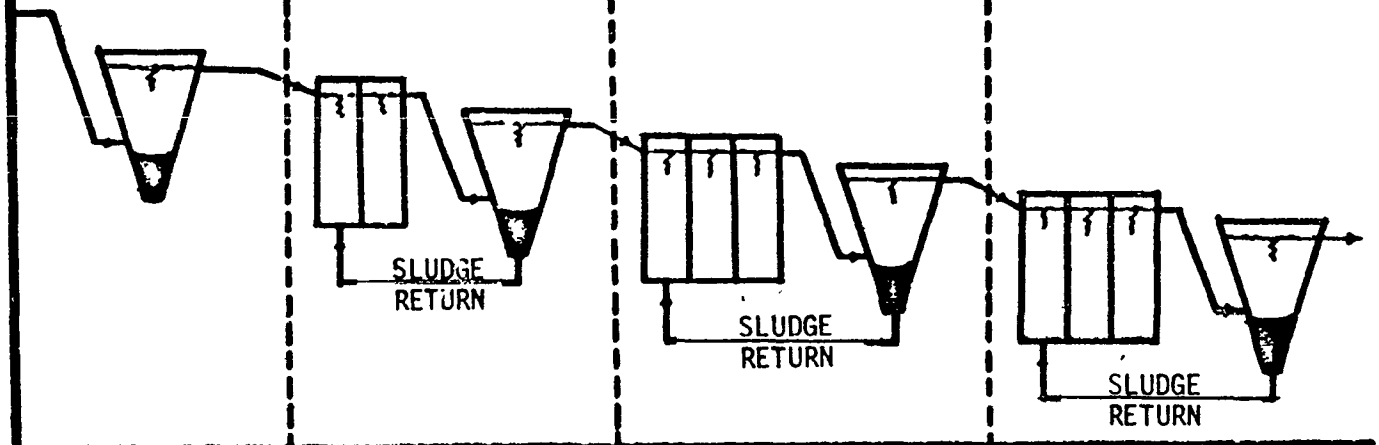

PROCESS FLOW DIAGRAM

FIGURE NO. 5-44

nitrogen concentration. The organisms in this stage use the oxygen component of the nitrate radical to oxidize the organic carbon of methyl alcohol. The end products of this metabolism are elemental inert nitrogen gas and carbon dioxide, which are liberated to the atmosphere.

Train 2. Wet Grinding, Reduction, Filtration/Evaporation and Calcination. See Figure 5-45. Wet grinding is used to reduce the particle size of solid waste explosives and when mixed with water a treatable slurry is produced. It has been found that waste explosives may be chemically reduced by treatment with solutions of sodium hydroxide and/or sodium sulfide. For example: Small quantities of nitrocellulose are decomposed by adding it with agitation to five times its weight of a 10 percent solution of sodium hydroxide that has been heated to 70C. Agitation is continued for at least 15 minutes after all the nitrocellulose has been added. The products of this decomposition process require additional treatment. After pH adjustment and dilution, the cellulose can be handled by a sewage treatment plant.

Lead azide may be destroyed chemically by mixing it with at least five times its weight of a 10 percent sodium hydroxide solution. The mixture is allowed to stand 16 hours and the supernatant solution containing sodium azide is decanted. The sodium azide solution is disposed of by draining into the ground. The lead is precipitated and can be recovered. This method is extensively used for waste streams from lead azide manufacture. This procedure is not recommended unless the effluent is treated.

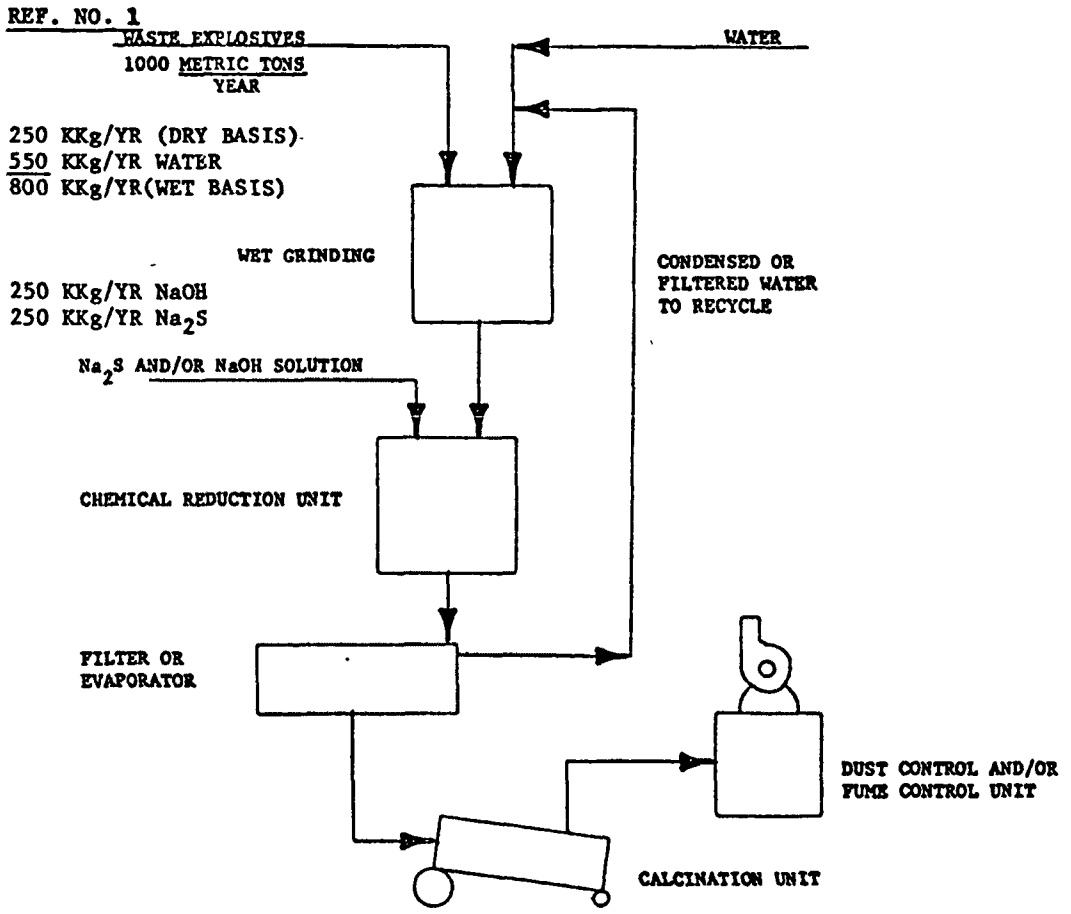

TRAIN 2

(WET GRINDING-REDUCTION)

EXPLOSIVES MANUFACTURE - WASTE EXPLOSIVES

WASTE STREAM NO. 24

FIGURE NO. 5-

Small quantities of PETN can be dissolved in acetone, and decomposed by reaction with a concentrated aqueous solution of sodium sulfide. The technique employed is to add a hot (80C) 33 percent solution of $Na_2S \cdot 9H_2O$ to an 11 percent solution of PETN in acetone at such rate that the acetone does not boil. Seven parts by weight of sulfide solution are used per part PETN. Stirring is continued for 30 minutes after mixing is completed. The reaction products should be burned in a spray injection type incinerator equipped with a caustic soda solution scrubber.

TNT is decomposed by adding it slowly, while stirring to thirty times its weight of a solution prepared by dissolving one part of sodium sulfide ($Na_2S \cdot 9H_2O$) in six parts of water. The reaction products should be burned in an incinerator equipped with caustic soda solution scrubbers.

Picric acid in aqueous waste streams or excess picric acid is decomposed by dissolving the material in 25 times its weight of water containing 1 part sodium hydroxide and 21 parts hydrated sodium sulfide. The hydrogen sulfide and ammonia liberated must be absorbed or scrubbed from the vent air. The solution from the disposal process should be neutralized, and the phenolic material remaining should be oxidized by chlorine or removed by adsorption on carbon. This disposal technique is considered satisfactory where the quantity of picric acid is too low to make recovery economically attractive, or when small quantities of the material are contaminated.

Those primers and detonators which are charged with explosive materials which can be decomposed by acids may be chemically "killed" by immersion in an

acid bath of sufficient strength to destroy the seals. This method permits recovery of the metallic components as scrap, but is limited in application because the items must be segregated by explosive mixture prior to treatment.

Benefits and Environmental Advantages and Disadvantages.

Train 1. Wet Grinding, Wet Oxidation, Aerobic and Anaerobic Treatment. The wet grinding, wet oxidation, biological treatment processes offer the following benefits:

1. Wet oxidation has been shown to reduce, on a COD/TOC basis, 80 to 97 percent of waste explosives.

2. In wet oxidation the water portion of the slurry provides a heat sink for absorption of the enthalpy of combustion. This shows up as a conversion of the water to high pressure steam. This generation of steam, estimated at an electrical equivalent of 500kw, based on a 1000 mt/year waste treatment plant, represents a considerable energy recovery. This energy can be recovered by utilization of a steam turbine with an associated generation of electrical energy.

3. No trace of unreacted propellants or explosives remains from the feed to the wet oxidation unit after reaction.

4. The "three sludge" system of aerobic and anaerobic digestion, as shown in Figures 5-41 through 5-43 represents a 90 percent or greater removal of total nitrogenous materials from its inlet stream and a 98-99 percent removal based on inlet nitrates content of material to the wet grinding operation.

Environmentally, the wet grinding, wet oxidation, biological treatment procedure for the treatment of waste explosives offers many advantages. These are:

1. Emissions from the wet grinding system are minimal, consisting of

spills from the mix tank and occasional floor washdowns. These can be collected with the water and any entrained explosives recycled for use in the wet grinding operation.

2. Emissions from the wet oxidation process, following the grinding operation, consist mainly of excess oxygen, nitrogen, CO_2 and steam. This gas stream, under high pressure, would be exhausted through a steam turbine, to recover useful electrical energy, and to condense the steam. The noncondensibles after the turbine can be exhausted to the atmosphere without any adverse effects. The condensed steam from the turbine is recycled back to the wet grinding operation eliminating this as an emission source.

3. The "3 sludge" biological treatment has air emissions consisting of CO_2 and nitrogen and is therefore environmentally acceptable. The final sludge from the biological treatment system is both biologically and chemically inert This sludge may be dewatered with the water being returned to the wet grinding and wet oxidation processes, and the dewatered inert sludge disposed of in a landfill.

The environmental disadvantages of the wet grinding, wet oxidation processes result in the main from the nature of certain of the explosives and/or propellants being treated.

Existence of compounds containing halogen group species will require special materials of construction in the wet grinding and wet oxidation processes. In addition, these halogen compounds will evidence themselves in the vapor stream from the wet oxidation unit necessitating special resistant metals for the energy recovery turbine and a vapor scrubbing-neutralization system.

Heavy metals, from such compounds as lead azide and mercury fulminate, will pass unchanged through the wet oxidation system and require the biological treatment processes to include precipitation and sedimentation as well as aerobic and anaerobic digestion.

These are not environmental disadvantages per se, but do result in an increase in capital and operating costs for the waste explosives process modules.

Train 2. Wet Grinding, Chemical Reduction, Filtration, Evaporation, Calcination. Wet Grinding followed by chemical reduction offers a safe controllable means of disposal of waste explosives. The benefits are:

1. The technologies of grinding chemical reduction, filtration, evaporation, and calcination are well developed with the scale-up from pilot plant processes easily defined.

2. All of the necessary equipment is commercially available and simple to operate and control.

3. Energy requirements, excepting for the evaporation and calcination processes, are not significant.

4. Chemical reduction and filtration will allow recovery of metals from the waste explosives.

5. Wet grinding will safely reduce solid waste explosives into sizes that are more reactive with chemical reduction (more surface area), easier to convey, and since they are in a water slurry, safer to handle.

The environmental advantages of the wet grinding, chemical reduction calcination disposal processes are:

1. Air emissions are not expected to be significant with proper fume abatement equipment on the calcination process.

2. Water emissions will be negligible, if any, since the condensed vapors from the evaporation process and some of the water from the filtration process are recycled to the wet grinding, chemical reduction processes for reuse. There are no liquid emissions from the calcination or wet grinding processes.

3. Solid wastes are generated only from the calcining process. Since these have been "deactivated" in the chemical reduction process they may be disposed of in a sanitary landfill.

The environmental disadvantages of these waste explosive disposal processes are:

4. Air pollution control equipment, notably cyclones and wet scrubbers, will be required to eliminate the air emissions from the calcining process.

5. The energy requirements of the evaporation and calcination process are excessive. This will be only partially offset by the fuel valve of the chemically reduced explosives.

6. If heavy metal explosives, such as lead azide or mercury fulminate are disposed of by these processes this will complicate the solid waste disposal problem. Either a heavy metal recovery system must be installed or the calcination solid wastes will have to be disposed of in a special chemical land disposal site.

Cost Analysis. The cost analysis is based on a plant producing 125,000 KKg per year of explosives and propellants operating 24 hours per day and 300 days per year. A summary of capital cost, annual operating cost and the cost impact for waste treatment follows.

WASTE STREAM NO. 24

TRAIN I

1. ESTIMATED INSTALLED CAPITAL COST

BASIS: 0.83 KKg/Day of Explosive Wastes (Dry Basis)

Equipment Item	Estimated Cost
Grinder	$ 10,200
Wet Oxidation Unit	307,700
Air Compressor	236,000
Slurry Pump	15,300
Aeration System	26,100
Steam Turbine	65,700
Biological Treatment System	60,000
Subtotal	$ 721,000
Engineering at 10%	72,100
Contingency including freight at 20%	144,200
Total Estimated Installed Capital Cost	$ 937,300

WASTE STREAM NO. 24

TRAIN I

2. ANNUAL FIXED CHARGES

Depreciation	$937,300	@ 10%/year	$ 94,000
Interest	$937,300	@ 10%/year	94,000
Insurance and Taxes	$937,300	@ 4%/year	38,000
Total Annual Fixed Charges			$ 226,000

3. DIRECT OPERATING COST

Raw Material		
Utilities	$ 1,400	
Maintenance 0.04 x $940,000	38,000	
Direct Labor 9600 MH x 9.00 x 1.5	129,600	
Annual Direct Operating Cost		$ 169,000
Annual Disposal Cost, Biosludge		Insignificant
Total Annual Cost		$ _____

Recovered Materials:
None - Power Recovered is credited in Utility Cost

Net Total Annual Cost		$ 395,000
4. COST PER KKg PRODUCT	$395,000 ÷ 125,000	$ 3.20
5. COST PER KKg WASTE	$395,000 ÷ 250	$ 1,580.

6. IMPACT ON PRODUCT COST

(Market value of 1 KKg product = NA)

Cost/KKg ÷ Market value/KKg = NA

WASTE STREAM NO. 24

TRAIN II

1. ESTIMATED INSTALLED CAPITAL COST

BASIS: 0.83 KKg/Day of Explosive Wastes (Dry Basis)

Equipment Item	Estimated Cost
Grinder	$ 10,200
Slurry Pump	15,300
Chemical Mix Tank	106,700
Chemical Feed Tank	74,700
Pump	9,000
Filter	168,800
Evaporator	153,300
Calciner	87,600
Dust Collector	18,400
Subtotal	$ 644,000
Engineering at 10%	64,400
Contingency including freight at 20%	128,800
Total Estimated Installed Capital	$ 837,200

WASTE STREAM NO. 24

TRAIN II

2. ANNUAL FIXED CHARGES

Depreciation	$ 837,200 @ 10%/year	$ 83,700
Interest	$ 837,200 @ 10%/year	83,700
Insurance and Taxes	$ 837,200 @ 4%/year	33,500
Total Annual Fixed Charges		$200,900

3. DIRECT OPERATING COST

Raw Material Caustic - 250 KKg/Year @ $155 Na_2S - 250 KKg/Year @ $265	$ 105,000	
Utilities	12,800	
Maintenance 0.04 x 837,200	33,500	
Direct Labor 9600 MH x 9.00 x 1.5	129,600	
Annual Direct Operating Cost		$280,900
Annual Disposal Cost, Residues from Calcination		Insignificant
Total Annual Cost		$481,800
Recovered Materials: None		0
Net Total Annual Cost		$481,800

4. COST PER KKg PRODUCT $481,800 ÷ 125,000 — $ 3.85

5. COST PER KKg WASTE $481,800 ÷ 250 — $ 1,930.

6. IMPACT ON PRODUCT COST

(Market value of 1 KKg product = NA)

Cost/KKg ÷ Market value/KKg = NA

REFERENCES

1. TRW Systems Group, Assessment of Industrial Hazardous Waste Practices: Organic Chemicals, Pesticides and Explosives Industries, 1976.

2. Proceedings; National Conference on Management and Disposal of Residues From The Treatment of Industrial Wastewaters, Washington, D. C., February 3-5, 1975. Page 87-97.

3. Barth, E. F. Nitrogen Removal by Biological Suspended Growth Reactors, Advanced Waste Treatment and Water Reuse Symposium, Cleveland, Ohio, March 30-31, 1971.

4. TRW Systems Group, Recommended Methods of Reduction, Neutralization, Recovery, or Disposal of Hazardous Waste, Volume VII, NTIS Publication PB224-579-SET/AS.

SECTION VI - INCINERATION

Summary and Basis

Of the 24 waste streams included in this report, 19 were considered applicable for incineration. Lead alkyls sludge, Waste Stream No. 10, and fluorocarbon manufacture spent reactor catalyst, Waste Stream No. 14, were eliminated from consideration because of anticipated air and water pollution by the heavy metals.

Nitrobenzene manufacture, crude nitrated aromatics Waste Stream No. 2 and chlorotoluene manufacture benzylchloride and benzotrichloride Waste Stream No. 15 were eliminated as being too small to consider; and cyanuric chloride manufacture Waste Stream No. 17 was not deemed to be applicable for incineration because of its high water and low organic content. It was considered that the 19 waste streams mentioned above could best be incinerated using four distinct types of incinerators (Table 6-1) as follows:

Five streams were processed in fluid bed units.

Eleven streams were processed in rotary kilns.

Two streams were processed in liquid incinerators.

One stream was treated using the Tampella process.

Detailed calculations were made for sizing the processing equipment in order to compute their costs. Basis data for preparation of the cost analysis for this report were obtained from USEPA Report SW-118C, Assessment of Industrial Hazardous Waste Practices: Organic Chemicals, Pesticides and Explosives Industries; (1976).

TABLE NO. 6 - 1

WASTE STREAM CHARACTERISTICS AND INCINERATION SYSTEM SELECTION

Stream* No.	Product and Typical Plant Size	Waste Stream Components Kg/KKg	Annual Rate KKg	Hourly Rate Kg/ (1)	Approx. Ht. Value KgCal/Kg	Incinerator Selection	Scrubber Selection	Comments
1	Perchloroethylene 39,000 KKg/yr	Hexachlorobutadiene (230) Dichlorobenzene (20) Tetrachloroethane (10) 1,2-Dichlorobutadiene (10) Tars (20)	12,000	1,700	2,200	Fluid bed reactor	Packed column	Auxiliary fuel required to convert Cl_2 to HCl
2	Nitrobenzene 20,000 KKg/yr	Crude nitrated aromatics (2.5)	50	7.0	6,000	-	-	Insufficient amount of waste to consider an incineration system. Use plant boiler fire box.
3	Chlorinated solvents 50,000 KKg/yr Chloromethane	Crude hexachlorobenzene and Hexachlorobutadiene (6)	300	42.0	1,800	Rotary kiln	Packed column	Auxiliary fuel required to convert Cl_2 to HCl
4	Epichlorohydrin 75,000 KKg/yr	Ethyl, methyl, 1-chloro ether (7.4) Dichlorohydrin (5.7) Trichloropropane (37.1) Epichlorohydrin (1.06)	4,000	560.0	2,700	Fluid bed reactor	Packed column	
5	Toluene diisocyanate 27,500 KKg/yr	Polyurethanes (19) Isocyanates (0.58) Ferric chloride (1.35)	558	78.0	7,200	Rotary kiln	Packed column	
6	Vinyl chloride monomer 136,000 KKg/yr	Ethylene dichloride (0.8) Chloroethanes (37.0) Tars (0.05) Ash (0.20)	1,400	660.0	4,100	Fluid bed reactor	Packed column	Ash removal required
7	Methyl methacrylate 55,000 KKg/yr	Hydroquinone (1) Various polymeric residues (125)	4,730	660.0	7,200	Liquids incinerator	Packed column	
8	Acrylonitrile 80,000 KKg/yr	Acrylonitrile (2.5) Higher nitriles (2.5)	160	55.0	8,400	Liquids incinerator	Packed column	
9	Maleic anhydride 11,000 KKg/yr	Maleic anhydride (3.8) Fumaric acid and tars (26.5)	333	47.0	4,800	Rotary kiln	Packed column	
11	Ethanolamines mfr. 14,000 KKg/yr	Triethanolamine (40) Tars (40)	1,120	155.0	7,300	Rotary kiln	Packed column	

Note: Stream No. 10 and 14 contain toxic metals and are not to be incinerated.

(1) Hourly rate fed to incineration system.

*See Table 2-1.

TABLE NO. 6 - 1 (CONTINUED)

Stream No.	Product and Typical Plant Size	Waste Stream Components Kg/KKg	Annual Rate KKg	Hourly Rate Kg/hr (1)	Approx. Ht. Value KgCal/Kg	Incinerator Selection	Scrubber Selection	Comments
12	Furfural mfr. 35,000 KKg/yr	Sulfuric acid (60) Tars and polymers (500)	19,600	2,720.0	7,400	Fluid bed incinerator	Packed column	W/H_2SO_4 recovery
13	Furfural mfr. 35,000 KKg/yr	Filter solids (5)	350	49.0	3,300	Use Stream 12 incinerator	-	-
15	Chlorotoluene mfr. 15,000 KKg/yr	Benzylchloride (.5) Benzotrichloride (.5)	15	2.1	3,600	-	-	Waste stream too small to consider incineration
16	Chlorobenzene mfr. 32,000 KKg/yr	Polychlorinated (.044) Aromatic resinous mat'l.	1,400	195.0	2,500	Rotary kiln	Packed column	W/HCl recovery
17	Cyanuric chloride mfr. in atrazine production 20,000 KKg/yr	Sodium chloride (924) Cyanuric acid (6) Sodium hydroxide (31) Insoluble residue (161) (Balance water)	224,600	31,200	-	-	-	Incineration not practical. Almost all water and inorganics in waste stream.
18	Trifluralin mfr. 10,000 KKg/yr	Spent carbon (60) Fluoroaromatics (9.3) Intermediates (45.7) and solvents	1,150	160.0	5,600	Rotary kiln	Packed column	Ash removal required
19	Malathion mfr. 14,000 KKg/yr	Dimethyl dithiophosphoric acid (5) Toluene & insol. reaction prod. (54) Carbon filter aid (71.5)	1,826	255.0	8,000	Rotary kiln	Packed column	Ash removal required
20	Malathion mfr. 14,000 KKg/yr	Malathion (10) Toluene & malathion (15) Impurities plus NaOH plus water	350+ 14,350*	49.0+ 2,000*	5,600+ 136*	Rotary kiln	Packed column	Evaporation step, then combine and incinerate with Stream 19
21	Parathion mfr. 20,000 KKg/yr	Sulfur (105) Diethylthiophosphoric acid (10)	2,300	320.0	2,600	Rotary kiln	Packed column	W/SO_2 recovery
22	Explosives mfr. 93,000 KKg/yr (TNT)	Activated carbon (1.71) Nitrobodies (0.72) Water (1.71)	350	42.0 71.0	3,300	Rotary kiln	Packed column scrubber	Ash removal required
23	Explosives mfr. 30,000 KKg/yr TNT	Red water solids (175) Water (325)	15,000	2,090	-	Tampella process included		
24	Explosives mfr. 125,000 KKg/yr	Waste explosives (2.0)	250	52.0	2,600	Rotary kiln	Packed column scrubber	

*Wet basis
+Dry basis

(1) Hourly rate fed to incineration system.

Cost data for most pollution control equipment modules were obtained from Environmental Protection Cost Manual EPA-R5-73-023b July 1973. Costs for treatment and disposal for the waste streams in this report are based on 300 operating days per year and 3 shifts per day unless otherwise stated. Unit costs for utilities, maintenance, labor, taxes, insurance, land cost, and contingency are per EPA letter.[6] For further detail of unit costs and bases see Methodology Section. Incineration Cost Summary as shown in Table 6-2.

In the examination and review of the tabulated data on the summary sheets it became apparent that savings could be realized by increasing the unit size of the controlled incineration equipment while reducing the operation to fewer shifts. For example, Waste Streams No. 3 and No. 8 were each recalculated from 900 to 300 shifts per year and operation. In each case, an appreciable cost saving per kkg of product was realized with 300 shifts per year operation. For Waste Stream No. 3 the cost dropped from $3.00 to 1.70 per kkg of product and for Waste Stream No. 8, the cost fell from $1.48 to $1.10 per kkg of product. It is possible that by further reducing the number of operating shifts and increasing the equipment size accordingly that additional cost savings might be realized.

Although optimum cost determinations are beyond the scope of this report and is usually not needed to generate order-of-magnitude cost data, the foregoing cost analysis is presented for general interest. Cost optimization must be considered once an incineration system has been studied and fully defined.

TABLE NO. 6 - 2

WASTE STREAM INCINERATION COST SUMMARY

Stream* No.	Product and Typical Plant Size	Installed Capital Cost	Annual Fixed Charges	Utility Cost/yr	Maintenance/yr	Labor/yr	Total Annual Cost	Cost per KKg Waste	Cost per KKg Product	Resource Recovery Possibility HCl	SO_2	Energy
1	Perchloroethylene 39,000 KKg/yr	$1,276,000	$306,000	$134,000	$52,000	$49,000	$541,000	$ 45.	$14.	Yes	-	Yes
2	Nitrobenzene 20,000 KKg/yr	Insufficient quantity of waste to consider incinerator system								-	-	-
3	Chloromethane 50,000 KKg/yr	184,000	48,000	6,400	8,000	24,300	86,400	288.(1)	1.70(1)	Yes	-	Yes
4	Epichlorohydrin 75,000 KKg/yr	938,000	225,000	25,000	37,500	49,000	337,000	84.	4.50	Yes	-	Yes
5	Toluene diisocyanate 27,500 KKg/yr	173,000	42,000	7,000	7,000	73,000	129,000	231.	4.70	Yes	-	Yes
6	Vinyl chloride monomer 136,000 KKg/yr	946,000	228,000	8,000	38,000	17,000	291,000	208.	2.10	Yes	-	Yes
7	Methyl methacrylate 55,000 KKg/yr	371,000	89,200	11,300	15,000	24,000	140,000	30.	2.50	-	-	Yes
8	Acrylonitrile 80,000 KKg/yr	153,000	37,000	5,000	6,100	8,000	56,000	350.(1)	1.10(1)	-	-	Yes
9	Maleic anhydride 11,000 KKg/yr	160,000	38,600	3,000	6,400	73,000	121,000	363.	12.	-	-	Yes
** 11	Ethanolamines 14,000 KKg/yr	198,000	47,500	5,000	8,000	73,000	134,000	120.	9.60	-	-	Yes
12	Furfural mfr. 35,000 KKg/yr	1,699,000	408,000	110,000	68,000	49,000	635,000	32.	18.	-	Yes	Yes
13	Furfural mfr. 35,000 KKg/yr	172,000	41,200	2,000	6,900	-	50,000	143.	1.40	(Incinerate with Stream No. 12)		
** 15	Chlorotoluene mfr. 15,000 KKg/yr	15 KKg/yr of waste is too small to consider incineration										

(1) One Shift Per Day.
*See Table 2-1
**Stream No. 10 and 14 contain toxic metals and are not to be incinerated.

TABLE NO. 6 - 2 (CONTINUED)

WASTE STREAM INCINERATION COST SUMMARY

Stream No.	Product and Typical Plant Size	Installed Capital Cost	Deprec. Value/yr	Utility Cost/yr	Maintenance/yr	Labor/yr	Total Annual Cost	Cost per KKg Waste	Cost per KKg Product	Resource Recovery Possibility HCl	SO2	Energy
16	Chlorobenzene mfr. 32,000 KKg/yr	$ 205,000	$ 49,200	$5,000	$ 8,200	$73,000	$135,000	$ 97.	$ 4.20	Yes	-	Yes
17	Cyanuric chloride 20,000 KKg/yr atrazine	Water is 90 percent of waste stream, and incineration is too costly to consider.										
18	Trifluralin mfr. 10,000 KKg/yr	225,000	54,100	5,000	9,000	73,000	141,000	123.	14.	-	-	Yes
19	Malathion 14,000 KKg/yr	313,000	75,000	6,000	12,500	73,000	167,000	91.	12.	-	-	Yes
19 & 20	Malathion 14,000 KKg/yr	792,000	190,000	89,000	31,700	122,000	433,000	30.* 1240.+	31.	Incinerate with Stream 19		
21	Parathion 20,000 KKg/yr	282,000	67,500	7,000	11,300	73,000	159,000	69.	7.90	-	Yes	Yes
22	Explosives mfr. 93,000 KKg/yr	649,000	155,800	11,000	26,000	113,000	306,000	873. 1530.	3.30	-	-	-
23	Explosives mfr. 30,000 KKg/yr (TNT)	13,200,000	3,168,000	110,000	528,000	219,000	4,025,000	268.	134.	-	-	-
24	Explosives mfr. 125,000 KKg/yr	544,000	130,000	11,000	21,700	113,000	276,000	1105.	2.20	-	-	-

*Wet basis
+Dry basis

Types of Incinerator Equipment

Many different types of incineration equipment are availabe for disposal of gases, liquids and solid wastes. The type and form of waste will dictate the type of combustion unit required.

1. Incinerators for waste gases are usually of the flare, direct combustion, or catalytic oxidation type.

Of these three types, the flare is not environmentally suitable for hazardous materials.

The direct flame type is suitable for waste gases with calorific value less than 25 percent of the lower flammability limit.[3]

Catalytic oxidation is suitable for gases with low calorific values (approximately 180 kg C/M^3).[3]

2. Liquid injection incinerators are limited to pumpable liquids and slurries which can be properly atomized (viscosity of 750 SSU or less) and are commercially available in both vertical and horizontal design.[3]

3. Solid waste incinerators are available in many designs, among which are rotary kiln, multiple hearth, multiple chamber, fluidized bed, and open pit. Open pit incineration is not environmentally suitable for hazardous materials as it cannot readily be adapted to secondary pollution abatement equipment, hence is unacceptable under many air pollution codes.[2]

Equipment Selection and Benefits

The types of incinerator units having the greatest application in handling the waste streams in this report are described below. The type of waste for

which these and other units are best suited is shown diagrammatically in Figure 6-1.

1. Liquid Waste Incinerator. See Figure 6-2.

a. Operating Principle.[1] Liquid waste is converted to the gaseous state inside a combustion chamber, receiving heat transfer from the hot combustion product gases to the injected liquid. Commonly, the amount of surface exposed to heat is increased by atomizing the liquid to small droplets in the liquid burner, directly at the point of fuel and air mixing.

A wide range of industrial liquid wastes may be incinerated provided the heating value is sufficient to maintain temperature for complete combustion. When a low-heat-value liquid is incinerated, it must be blended with a liquid of higher heat value or auxiliary fuel will be required.[2]

The ash, if any, will essentially be all gas borne particles and will normally be removed by an appropriate air pollution control system. A certain amount of particulate will drop out within the incinerator, occasional shutdown and cleanout will be required. Depending on the quality of the liquid waste and auxiliary fuel burned, cleanout may be required at about six month intervals.[2]

b. Uses and Advantages.

(1) Capable of incinerating a wide range of liquid wastes.

(2) No continuous ash removal system is required other than for air pollution control.[2]

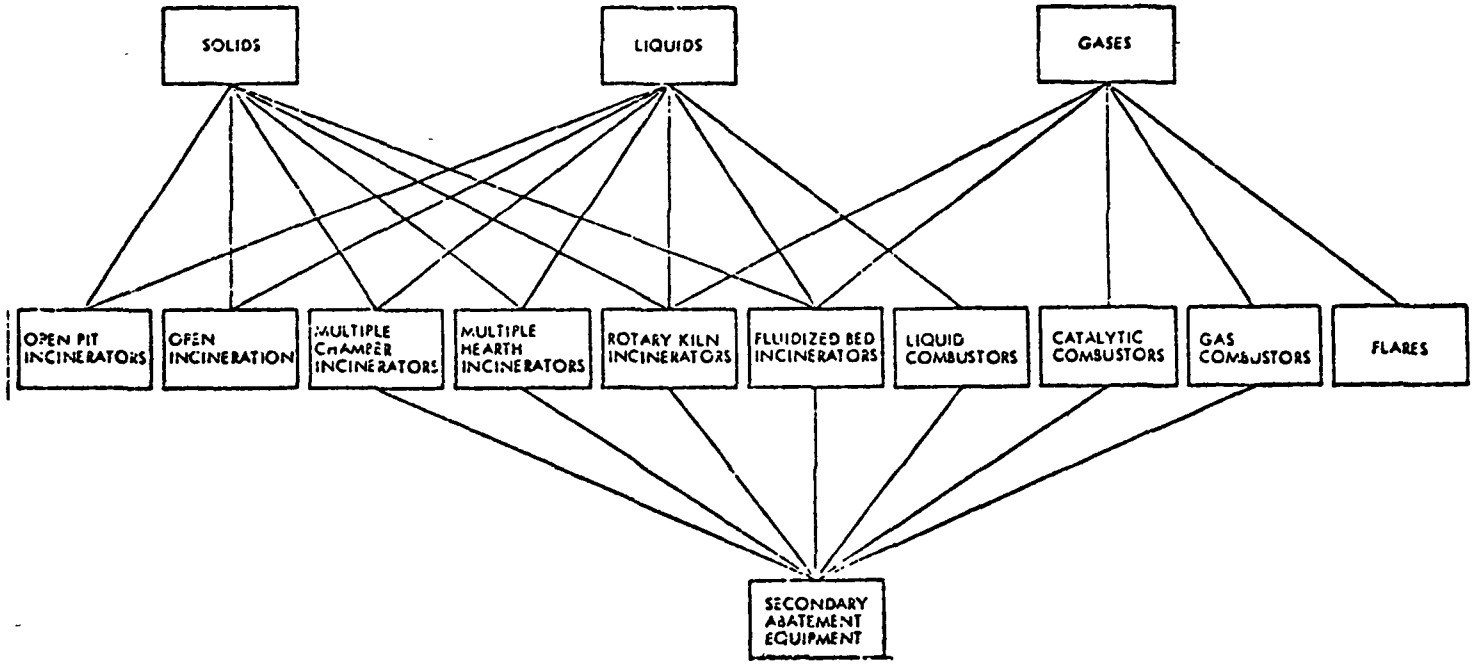

TYPES OF INCINERATORS AND THEIR APPLICATIONS

FIGURE NO. 6-1

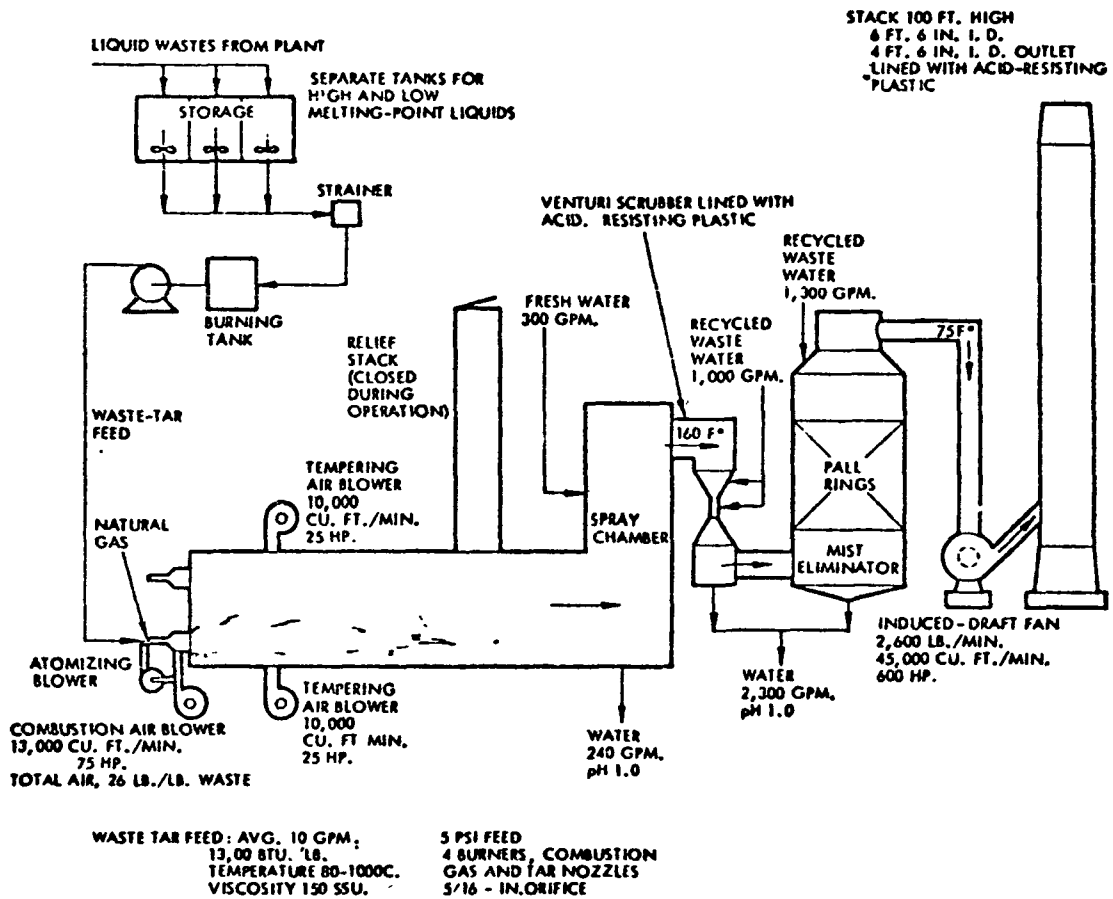

HORIZONTALLY FIRED LIQUID WASTE INCINERATION (1)

FIGURE 6-2

c. Limitations and Disadvantages.

(1) Must be able to atomize tars or liquids through a burner nozzle except for certain limited applications.

(2) Heat content of liquids must maintain adequate temperatures or a supplemental fuel must be provided.

(3) Must provide for complete combustion and prevent flame impingement on refractory.[2]

2. Rotary Kiln

a. **Operating Principle.** The rotary kiln[2] provides the design flexibility for incineration of a wide variety of liquid and solid industrial wastes. Any burnable liquid capable of being atomized by steam or air through a burner nozzle can be incinerated concurrently with a wide range of industrial solids. Heavy tars may be fed as solid waste in packs or metal drums. The kiln can be designed to receive 55 gallon drums, or a feed mechanism can be designed to empty the drum and retain it. It is also capable of handling pallets, plastics, filter cakes, and other solid chemicals passing through a liquid phase before combustion.

The rotary kiln provides a maximum amount of turbulence, agitation and surface air contact to achieve complete burnout. Complete combustion of slow burning refuse is aided by a relatively long inventory time in the combustion chamber. Ash discharge is continuous. Roll through a spherical or cylindrical items would normally be prevented by the other solid refuse being incinerated.

Since the drive mechanism is outside the kiln, maintenance is low.

There are no internal moving parts such as rabble arms, grates, or plows.

Care must be exercised in determining kiln size to provide for adequate accommodation of solid wastes and maximize refractory life. As the kiln size decreases, the unit becomes increasingly sensitive to excessive heat release and temperature control becomes more difficult.

The rotary kiln is a high capital installation and would not be considered practical for very low feed rates. Practical sizes are limited. At a minimum, sufficient capacity must be provided to accommodate the feed packages such as drums or packs and prevent flame impingement on the refractory when liquid wastes are incinerated. The maximum size is determined by turndown problems, operating costs, maintenance of a proper combustion temperature, and construction-fabrication costs. Turndown, the ratio of maximum to minimum thermal capability, represents a problem due to leakage of air through the system.

Since the rotary motion of the kiln precludes the use of suspended brick, the refractory is more susceptible to thermal shock damage. For this reason, continuous operation should be maintained as much as possible. Rebricking of the hottest part of the kiln can be anticipated on roughly an annual basis. Therefore, it is often advisable to maintain an inventory of kiln refractory and refractory for multiple hearth furnaces in protected storage.

Airborne particles may be carried out of the kiln before complete combustion. A high temperature secondary combustion chamber with intimate flame contact is normally required for complete burnout. The fuel for the secondary combustion chamber should be dependable high quality waste liquid or commercial fuel. The rotary kiln incinerator is shown in Figure No. 6-3.

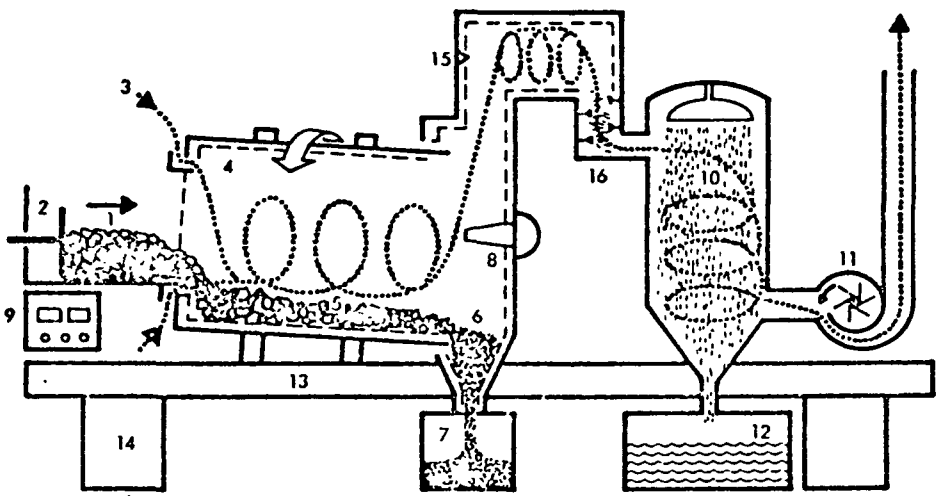

1 WASTE TO INCINERATOR
2 AUTO-CYCLE FEEDING SYSTEM: FEED HOPPER, PNEUMATIC FEEDER, SLIDE GATES
3 COMBUSTION AIR IN
4 REFRACTORY-LINED, ROTATING CYLINDER
5 TUMBLE-BURNING ACTION
6 INCOMBUSTIBLE ASH
7 ASH BIN
8 AUTO-CONTROL PACKAGE: PROGRAMMED PILOT BURNER
9 SELF-COMPENSATING INSTRUMENTATION-CONTROLS
10 WET-SCRUBBER PACKAGE: STAINLESS STEEL, CORROSION-FREE WET SCRUBBER; GAS QUENCH
11 EXHAUST FAN AND STACK
12 RECYCLE WATER, FLY-ASH SLUDGE COLLECTOR
13 SUPPORT FRAME
14 SUPPORT PIERS
15 AFTERBURNER CHAMBER
16 PRECOOLER

PORTABLE ROTARY KILN INCINERATION UNITS[1672]

FIGURE NO. 6-3

b. Uses and Advantages

(1) Will incinerate a wide variety of liquid and solid wastes.

(2) Capable of receiving liquids and solids independently or in combination.

(3) Not hampered by materials passing through a melt phase.

(4) Feed capability for drums and bulk containers.

(5) Wide flexibility in feed mechanism design.

(6) Provides high turbulence and air exposure of solid wastes.

(7) Long inventory time for slow burning refuse.

(8) Continuous ash discharge.

(9) No moving parts within the kiln.

(10) Adaptable for use with a wet gas scrubbing system.

c. Limitations and Disadvantages

(1) High capital cost installation for low feed rates.

(2) Cannot utilize suspended brick in kiln.

(3) Operating care necessary to prevent refractory damage.

(4) Airborne particles may be carried out of kiln before complete combustion.

(5) Spherical or cylindrical items may roll through kiln before complete combustion.

(6) Kiln incinerators frequently require excess air intake to operate due to air leakage into the kiln via the kiln end seals and feed chute, which lowers fuel efficiency.

(7) Drying or ignition grates, if used prior to the rotary kiln, can cause problems with plastics melt plugging grates and grate mechanisms.

3. Fluidized Bed Incinerator.

a. Operating Principle. Fluidized bed incinerators[3] are quite versatile, being usable for the disposal of solid, liquid, and gaseous combustible wastes. The utilization of this process for waste disposal is relatively new, having been in commercial use for only about the last dozen years. At present, the most popular applications are in the petroleum and paper industries, in the processing of nuclear wastes, and in sewage sludge disposal.

The basic fluidized bed combustor is shown in Figure No. 6-4. The bed is essentially a vessel containing inert granular particles, such as sand, Blower-driven air enters at the bottom and proceeds vertically through the bed, agitating or "fluidizing" it and causing it to behave in a nature similar to a dense liquid mass. Wastes are injected pneumatcially, mechanically, or by gravity into the bed. Rapid and relatively uniform mixing of wastes and bed material occurs.

In the combustion process, heat transfer occurs between the bed materials and the injected waste materials. Typical bed temperatures are in the range of 760 to 870C (1400 to 1600F). Due to the high heat capacity of the bed material, the heat content of the fluidized bed is approximately 142,000 kg-cal./m^3 (16,000 Btu per $foot^3$), which is about three times greater than the heat capacity of flue gases in typical incinerators operating in the same temperature range.[1] Heat from combustion is transferred back to the bed

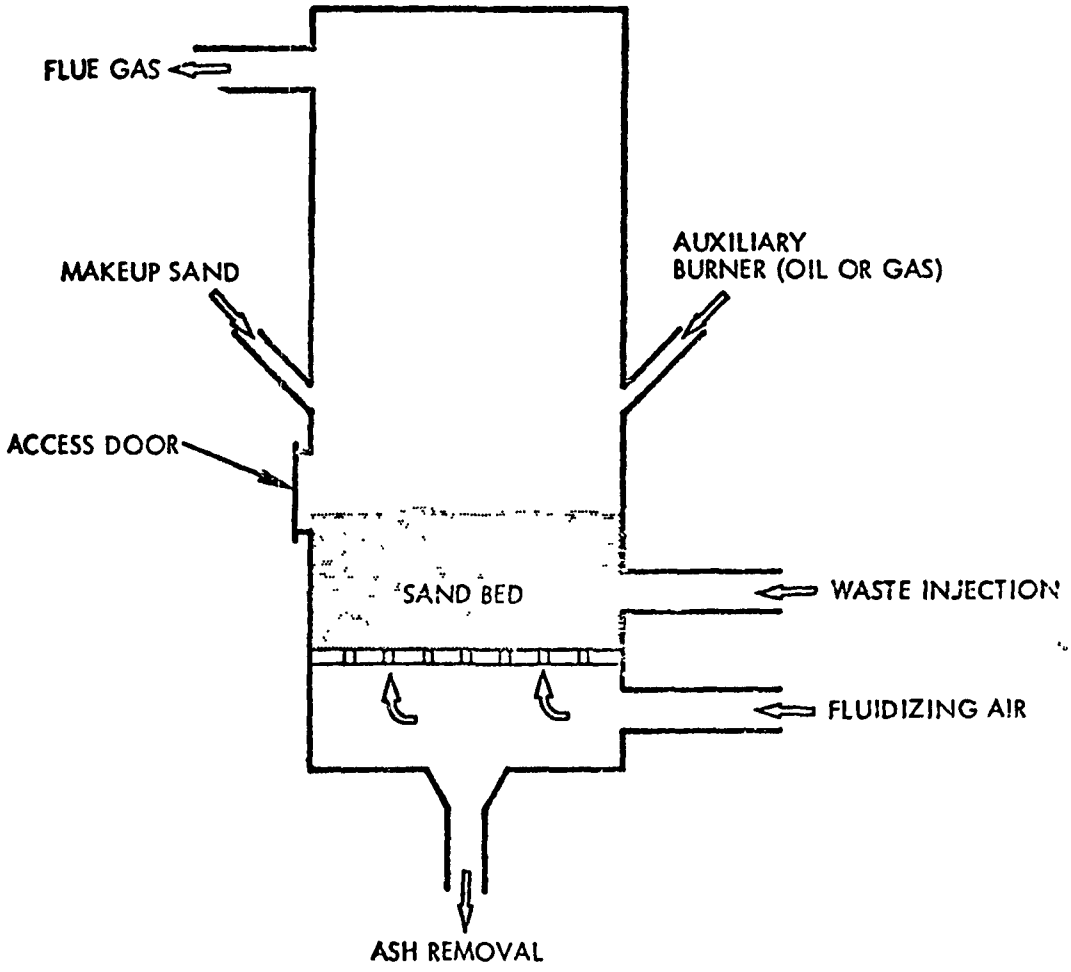

SCHEMATIC OF A FLUIDIZED BED INCINERATOR[1]

FIGURE NO. 6-4

material. Solid materials remain in the bed until they have become small and light enough to be carried off with the flue gas as a particulate. Collected ash is generally land disposed.

Gas velocity, bed diameter, bed temperature, waste type, and composition are important in designing a fluidized bed incinerator. Due to waste particle size constraints, gas velocities are usually low, around 1.5 to 2.1 m (5-7 feet) per second. With present design technology, bed diameters are limited to 15.3 meters (50 feet) or less. Bed depths range from 38 centimeters (15 inches) to a few meters. To avoid softening and agglomeration, bed temperatures are restricted to below the material softening point. Certain wastes have to be presized before feeding.[1]

For adequate combustion, predrying of wastes may be necessary. The use of recycled combustion gases in such a drying system can recover waste heat, thus reducing auxiliary fuel input and costs. For start-up and for conditioning of the bed, an auxiliary burner system is required.

As with most other incineration techniques, fluidized bed combustion may generate particulate and/or gases which may require air pollution controls prior to emission to the atmosphere. Wet scrubbers, dry collectors, electrostatic precipitators, and fabric filters have proven to be effective in reducing airstream particulates. The method used to control gaseous pollutants will depend upon the particular combustion products. Normally, no odors and little nitrogen oxide is produced from fluidized bed combustion.

b. Uses and Advantages

(1) General applicability for the disposal of combustible solids, liquids, and gaseous wastes.

(2) Simple design concept, requiring no moving parts in the combustion zone.

(3) Compact design due to high heating rate per unit volume (900,000-1,800,000 kg.-cal./hr. m^3 (100,000-200,000 Btu per hour.-ft.^{3}) which results in relatively low capital costs.

(4) Relatively low gas temperatures and excess air requirements which tend to minimize nitrogen oxide formation and contribute to smaller, lower cost emission control systems.

c. Limitations and Disadvantages[2,3]

(1) Requires fluid bed preparation and maintenance.

(2) Feed selection must avoid bed damage.

(3) May require special operating procedures to avoid bed damage.

(4) Incineration temperatures limited to a maximum of about 1500F.

(5) With present design technology, unit capacity is limited by a maximum bed diameter of about 15 m (50 feet).

(6) A potential problem in removing residual materials from the bed.

4. Air Pollution Control Equipment. Following incineration of industrial hazardous wastes the combustion gases will invariably require a secondary treatment to render the waste stream quality acceptable to the atmosphere. A great

variety of equipment is available for controlling air polluting emissions. Some wet scrubbers are: spray tower, packed bed, wet cyclone, orifice plate bubbler, venturi, jet type. Among the dry type units are mechanical cyclones, electrostatic precipitators, and fabric filters. In this report the packed bed scrubber has been selected for all installations where secondary pollution control equipment was required.

In the packed bed scrubber[1] the effluent gas stream to be cleaned is directed through a chamber or tower in which it makes contact with the scrubbing liquid. The high liquid surface area exposed to the gas stream is produced by interaction with the packed bed. The packed bed may be in the form of a fixed packing or loose material which is supported by the action of the gas stream passing through it. This latter type is called a floating bed scrubber. Scrubbing liquid is generally passed through this type of scrubber in a direction crosscurrent or countercurrent to the gas flow.

The fixed bed scrubber is not often used strictly for particulate pollutant collection. Operating problems have been encountered when this type of collector is utilized to clean a gas stream containing an excessively high concentration of particulate material. Therefore, in conjunction with this type of equipment, some form of dry collection equipment is used that eliminates much of the particulate load on the wet scrubber and helps prevent clogging.

The floating bed units, in which the packing is supported by the upward motion of the exhaust gas stream, are reported to be more resistant to

clogging caused by particulate collection than the fixed packed bed units.

This reported increased ability to handle particulate contaminant is attributed to the relative motion between the materials which produce a self-cleaning action and allows the collected particulate material to be removed by the liquid flow. High particulate removal efficiencies (95 to 98 percent) have been reported for floating bed scrubbing units.

Flooding occurs when the upward gas velocity in the packed tower reaches a point at which there is a hold-up of liquid phase on the packing. In this condition, the liquid held in the packing builds up and eventually increases the pressure drop across the packed tower unit to the point where liquid will be entrained and carried out with the exhaust stream. Care must be taken in the design and operation of tower equipment to ensure that this flooding condition is avoided and a reasonable pressure drop is maintained. Properly designed packing materials allow a high liquid surface area to be maintained within the scrubber. Operation at proper liquid-to-gas flow ratios can achieve high gaseous pollutant removal at relatively low gas flow resistances. Packing materials commonly used are plastic materials of various shapes, including rings, spiral rings, berl saddles, and other shapes which allow a high ratio of surface area to volume.

Utility consumption for the packed bed scrubber depends on the design of the bed, the packing material used and the collection efficiency desired, Typical water consumption for the packed bed scrubber ranges from 5 to 10 gpm per 1,000 cfm. Normal packed scrubber design dictates a pressure drop of from

1 to 10 inches of water with a total horsepower requirement of 0.3 to 2.8 for fan and pumping costs. Efficiencies of 95 to 98 percent have been realized for both particulate and gaseous control, although not necessarily concurrently.

The choice between crossflow and countercurrent scrubber design is dependent on the particular application. Generally the crossflow scrubber is applied to situations where the bed depth is less than 6 feet and countercurrent design is applied at bed depths of 6 feet or more. These applications are based on the lowest combination of installed capital cost and operating cost.

REFERENCES

1. TRW Systems Group - Recommended Metho-s of Reduction, Neutralization, Recovery, or Disposal of Hazardous Waste - Volume III Disposal Process Discriptions. August 1973. NTIS Publication PB-224-579-SET/AS

2. Manufacturing Chemists Association. A Guide for Incineration of Chemical Plant Wastes SW-3, Adapted 1974.

3. Scurlock A. C., A. W. Lindsey, T. Fields Jr. and D. R. Huber, Office of Solid Wastes Management Programs. Incineration in Hazardous Waste Management EPA Report SW-141. 1975.

4. Personal Communications. Fluid Bed Reactor Sizing Data. Walker Process Division, Chicago Bridge & Iron. August 14, 1973.

5. The 1975 Energy Management Guidebook.

6. Personal Communication. E. P. Crumpler, OSWMP to J. M. Genser, Processes Research, Inc., October 14, 1976.

SECTION VII - LAND DISPOSAL

Description. The conventional sanitary landfill has been defined as "a land disposal site employing an engineered method of disposing of solid wastes on land in a manner that minimizes environmental hazards by spreading the solid wastes in thin layers, compacting solids to the smallest practical volume, and applying cover material at the end of each operating day."[1] A chemical waste landfill is a modification of the conventional sanitary landfill to make it acceptable for receipt of hazardous materials. In general, the landfill should provide long-term protection for the quality of surface and subsurface waters from hazardous deposits therein, and against hazards to public health and the environment.[1]

It is assumed that the operation of a landfill is at the site of a typical plant. Quantities of waste are based on the individual waste stream only (not accepting waste from other sources).

At best, a chemical land disposal is Level II technology, but in some cases it may be the only alternative for waste disposal. Most of the criteria used for design of a sanitary landfill for municipal wastes can also be applied to a chemical land disposal. These criteria are well established in the literature, as well as documented in EPA publications.[1-7]

Cost Analysis (See Table 7-1). Costs have been developed for disposing of hazardous wastes in a sanitary landfill which is really an unacceptable method but was generated for comparison. The mode of operation was the same as for municipal refuse.

TABLE NO. 7 - 1
WASTE STREAM LANDFILL COST SUMMARY

Stream No.*	Products and Typical Plant Size	Waste Stream Components	Waste Generation KKg/Year	Sanitary Landfill Cost $/ KKg Waste	Sanitary Landfill Cost Impact $/ KKg Prod.	Chemical Landfill Cost $/ KKg Waste	Chemical Landfill Cost Impact $/ KKg Prod.
1	Perchloroethylene 39,000 KKg/yr.	Hexachlorobutadiene Chlorobenzenes Chloroethanes Chlorobutadiene Tars	12,000	10.00	3.15	48.00	16.00
2	Nitrobenzene 20,000 KKg/yr.	Crude Nitrated Aromatics	50*	98.00	0.24	157.00	0.39
3	Chloromethane 50,000 KKg/yr.	Hexachlorobenzene Hexachlorobutadiene Tars	300*	97.00	0.58	128.00	0.77
4	Epichlorohydrin 75,000 KKg/yr.	Epichlorohydrin Dichlorohydrin Chloroethers Trichloropropane Tars	4,000	17.00	0.92	55.00	2.90
5	Toluene Diisocyantes 27,500 KKg/yr.	Polyurethane Ferric Chloride Isocyanates Tars	558*	97.00	2.08	156.00	3.34
6	Vinyl Chloride Mono. 136,000 KKg/yr.	1,2 Dichloroethane 1,1,2 Trichloroethane 1,1,1,2 Tetrachloroethane Tars	1,400	17.00	0.25	67.00	0.94
7	Methyl Methacrylate 55,000 KKg/yr.	Hydroquinone Polymeric residues	4,730	17.00	1.43	76.00	6.55
8	Acrylonitrile 80,000 KKg/yr.	Acrylonitrile Higher Nitriles	160*	98.00	0.19	158.00	0.31
9	Maleic Anhydride 11,000 KKg/yr.	Maleic Anhydride Fumaric Acid Chromogenic Compounds Tars	333*	98.00	2.95	166.00	5.02
10	Lead Alkyls 60,000 KKg/yr	Lead	30,000	7.00	3.53	61.00	31.00

*See Table 2-1.

TABLE NO. 7 - 1 (CONTINUED)
WASTE STREAM LANDFILL COST SUMMARY

Stream No.	Products and Typical Plant Size	Waste Stream Components	Waste Generation KKg/Year	Sanitary Landfill Cost $/ KKg Waste	Sanitary Landfill Cost Impact $/ KKg Prod.	Chemical Landfill Cost $/ KKg Waste	Chemical Landfill Cost Impact $/ KKg Prod.
11	Ethanolamines 14,000 KKg/yr.	Triethanolamine Tars	1,120	18.00	1.40	77.00	6.18
12	Furfural 35,000 KKg/yr.	Sulfuric Acid Tars and Polymers	19,600	8.00	4.46	76.00	43.00
13	Furfural 35,000 KKg/yr.	Fines and Particulates from Stripped Hulls	350*	Combined with Stream 12			
14	Fluorocarbon 80,000 KKg/yr.	Antimony Pentachloride Carbon Tetrachloride Trichlorofluoromethane Organics	18*	98.00	0.02	117.00	0.03
15	Chlorotoluene 15,000 KKg/yr.	Benzylchloride Benzotrichloride	15*	98.00	0.10	156.00	0.17
16	Chlorobenzene 32,000 KKg/yr.	Polychlorinated Aromatic Resinous Material	1,400	17.00	0.77	70.00	3.08
17	Atrazine 20,000 KKg/yr.	Water Sodium Chloride Insoluble Residues Caustic Cyanuric Acid	224,600	6.00	71.00	NA (huge water volume makes chemical landfill impractical.)	NA
18	Trifluralin 10,000 KKg/yr.	Spent Carbon Fluoro-aromatics Intermediates and Solvents	1,150	18.00	2.04	326.00	38.00
19	Malathion 14,000 KKg/yr.	Filter Aid Toluene Insoluble Residues Dimethyl Dithiophosphoric Acid	1,826	18.00	1.80	326.00	43.00

TABLE NO. 7 - 1 (CONTINUED)
WASTE STREAM LANDFILL COST SUMMARY

Stream No.	Products and Typical Plant Size	Waste Stream Components	Waste Generation KKg/Year	Sanitary Landfill Cost $/ KKg Waste	Sanitary Landfill Cost Impact $/ KKg Prod.	Chemical Landfill Cost $/ KKg Waste	Chemical Landfill Cost Impact $/ KKg Prod.
20	Malathion 14,000 KKg/yr.	Malathion Toluene Impurities Sodium Hydroxide	14,350	18.00	0.44	76.00	1.90
21	Parathion 20,000 KKg/yr.	Diethyl Thiophosphoric Acid	2,300	17.00	2.00	70.00	8.00
22	Explosives 93,000 KKg/yr.	Activated Carbon Nitrobodies	350*	NA	NA	NA	NA
23	Explosives 30,000 KKg/yr.	Redwater Nitrobodies of DNT	15,000	NA	NA	NA	NA
24	Explosives 125,000 KKg/yr.	Waste Explosives	250*	NA	NA	NA	NA

NA - Not Applicable, see page I-9.
*Drummed for Landfill

The costs of chemical or secure landfills were developed using the sanitary landfill techniques modified to insure the protection of subsurface water.[8] The following parameters were used: (See Figure No. 7-1).

1. Trench method of operation.
2. Landfill lined with compacted colloidal clay.
3. Synthetic liner over clay layer.
4. Primary leachate collection system (no leachate treatment).
5. Percolation barrier over each landfill.
6. Compacted cover material over the entire landfill.
7. Where applicable, encapsulation or chemical fixation was considered.
8. Land purchase was for one year's operation.

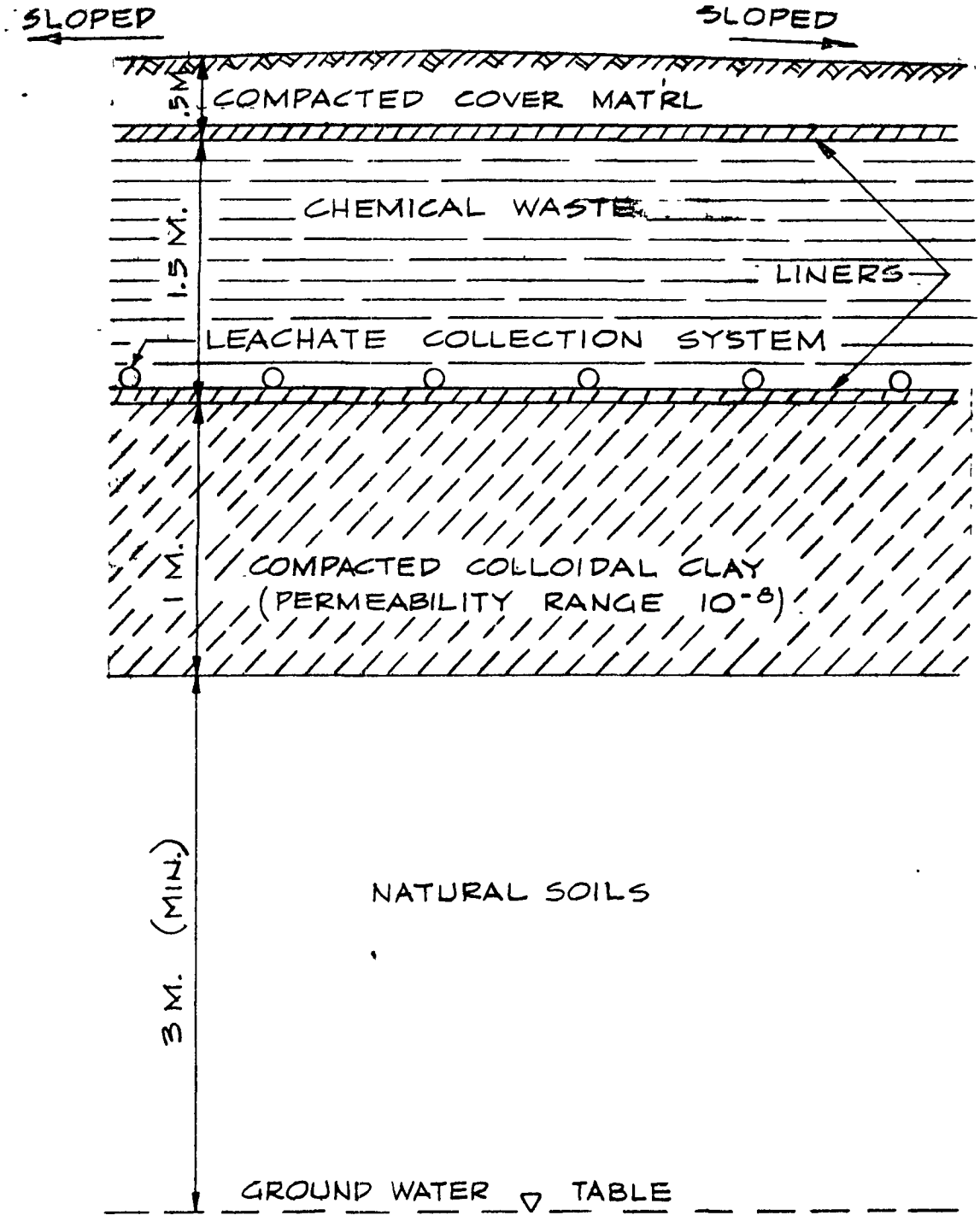

TYPICAL CROSS SECTION
CHEMICAL (SECURE) LANDFILL

Figure No. 791

It was assumed that each liquid or semiliquid waste stream would require either chemical fixation or encapsulation.[1] A bench-scale pilot unit could be used to determine the best technique. The cost for encapsulation or chemical fixation was also assumed the same. This is a major portion of the overall treatment cost for each waste stream; i.e., approximately 50-60 percent of total treatment cost.

Drumming costs were added to those waste streams whose quantity amounted to 20 drums or less per day. This cost is approximately $80 per metric ton of waste generated. Waste streams whose quantities exceeded 20 drums per day were assumed to be collected in tank trailers or tote bins for transport to the landfill site depending on whether the waste is liquid or solid. The cost for tank trailers or tote bins and the labor involved in transporting these containers has little effect on the total costs.

It was assumed that there would be no significant difference in cost per square meter for liner materials even though the materials of construction would differ among waste streams.

Basis For Estimating

1. Land Cost equals $12,350 per hectare ($5,000 per acre).

2. Sanitary Landfill

   a. Volume equals $1.25 \frac{R}{D} \frac{1-P}{100}$

      V equals volume in cubic meters

      R equals waste in MT

      D equals density in cubic meters per MT

P equals percent reduction from compaction

(Empirical formula from American Public Works)

b. Disposal Cost. Curve developed from TRW report for cover material, landfill equipment, and landfill labor.[5]

c. Leachate Cost. $1.32 per 1,000 liters or $1.30 per MT.[6]

3. Chemical Landfill

a. Construction as shown in Figure No. 7-1.

b. Excavation and Haul. $5.25 per cubic meter (derived from [10]).

c. Compacted Backfill. $4.40 per cubic meter (derived from [10]).

d. Liner Cost. $5.89 per square meter. Assumed 30 mil Hypalon liner, or equivalent. (Derived from information from liner manufacturer).

e. Leachate Collection System. $16,000 per hectare (derived from EPA/530/SW-165, September 1975).

f. Chemical Fixation or Encapsulation. $.05 per liter (derived from EPA/530/SW-165, September 1975).

g. Operating Cost. $1.50 per MT or $1.50 per 1,000 liter (from TRW curve for equipment and labor).[5]

4. Quantity of land purchased was based on that needed for one year's operation.

5. Densities and physical characteristics used to arrive at waste stream volumes are approximate. Ranges used are: $\frac{.23MT}{m3}$ equivalent to municipal refuse to $\frac{1.6MT}{m3}$ for heavy ends from perchloroethylene.

6. Cost Estimating Method for Sanitary Landfill.

a. Determine volume required in cubic meters.

b. Assuming 2-3 meter cell layers are available for use, determine surface area required:

$$\text{Surface Area Required} = \frac{V}{6} \times 10^{-4} \text{ hectares}$$

c. Multiply surface area by cost of land ($12,350/ha).

d. Use curve developed for cover material, landfill equipment, and landfill labor. Escalate to 1977.

e. Add cost in 4. to land cost.

f. If leachate treatment costs are to be included use $1.30 per MT of wastes.

Example: Stream No. 5, Centrifuge Sludge = 588 MT/year

$$\text{Volume} = 1.25 \frac{R}{D} \times \frac{1-P}{100} = 1.25 \times \frac{588}{1.23} \times \frac{1-50}{100}$$

$$= 735 \text{ m}^3.$$

$$\text{Land Cost} = \frac{735 \text{ m}^3}{6 \text{ m}} \times 10^{-4} \times \$12,350 = \$150$$

Disposal Cost = $10/MT x 588 MT x Escalation (From curve)

= 10 x 588 x 1.59 = $9,350

Leachate Cost = $1.30/MT x 588 MT = $ 765

Total $10,265

Cost for Drumming = $80/MT of waste

$$\text{Cost per MT of Waste} = \frac{\$10,265}{588} + \$80 = \$97.$$

$$\text{Cost per MT of Product} = \frac{\$10,265}{27,500} + \frac{588 \times 80}{27,500} = \$2.08$$

7. Cost Estimating Method for Chemical Landfill

a. Using density known or assumed $\frac{kkg}{m^3}$, determine volume of waste.

b. Using volume and assuming 1.5m depth of waste, determine area required for 20 year life and multiply by land cost.

c. Using 3m for total excavation depth, determine excavation and haul quantity and multiply times cost for excavation and haul.

d. Using 1.5m, for total compacted clay and cover material, determine quantity and multiply times cost for imported clay plus compaction.

e. Determine m^2 of liner material for 2 liners and multiply times cost of liner.

f. Determine leachate collection system cost, i.e., \$16,000/ha.

g. Add cost for chemical fixation or encapsulation at \$50/kkg or $\frac{\$.05}{1}$.

h. Determine operating cost at \$1.50/kkg.

Example: Stream No. 5, Centrifuge Sludge = 588 kkg/year

(1) Using Density = $\frac{1 \text{ kkg}}{m^3}$, Volume = 588 m^3

(2) Land Cost = $\frac{588 \text{ m}^3}{1.5 \text{ m}} \times \frac{10^{-4}}{m^2}$ ha x $\frac{\$12,350}{\text{ha}}$ = \$484

(3) Excavation and Haul = $\frac{\$5.25}{m^3} \times \frac{588m^3}{1.5m} \times 3m$ = \$6,175

(4) Imported Clay Plus Compaction = $\frac{\$4.40}{m^3} \times \frac{588m^3}{1.5m} \times 1.5m$ = \$2,590

(5) Liner Cost $= 2 \times \frac{588m^3}{1.5m} \times \frac{\$.55}{feet^2} \times \frac{10.7\ feet^2}{m^2} = \$4,615$

(6) Leachate Collection System Cost $= \frac{588m^3}{1.5m} \times \frac{10^{-4}ha}{m^2} \times \frac{\$16,000}{ha}$

$= \$650$

(7) Encapsulation or Chemical Fixation Cost =

$\frac{588\ kkg \times 1000}{1.0} \times \frac{\$.05}{1} = \$29,400$

(8) Operating Cost $= \frac{\$1.50}{MT} \times 588 = \$885$

Total	$44,800

Cost for Drumming = $80/kkg of waste

Cost per MT of wastes $= \frac{\$44,800}{588} + \$80 = \$156$

Cost per MT of product $= \frac{\$44,800}{27,500} + \frac{588 \times 80}{27,500} = \$3.34$

References

1. Fields, Timothy, Jr. and Lindsey, Alfred W., Landfill Disposal of Hazardous Wastes: A review of Literature and Known Approaches. Environmental Protection Publication SW-165. U. S. Government Printing Office, 1975. 36 pp.

2. American Public Works Association. Municipal Refuse Disposal. 2nd Edition, 1966.

3. Manson, Robert J. and Merritt, Clifford A., Land Application of Liquid Municipal Wastewater Sludges. Journal Water Pollution Control Federation, 47 (1): 23, January 1975.

4. Office of Solid Waste Management Programs. SW-87d. Unpublished data.

5. Office of Solid Waste Management Programs. Assessment of Industrial Hazardous Waste Practices: Organic Chemicals, Pesticides and Explo Industries. Environmental Protection Publication SW-118c. U. S. Government Printing Office, 1976.

6. Office of Solid Waste Management Programs. Analysis of Potential Application of Physical, Chemical and Biological Treatment Techniques to Hazardous Waste Management. EPA Contract No. 68-01-3554.

7. Proceedings; Hazardous Waste Research Symposium, University of Arizona, February 2-4, 1976. Environmental Protection Agency Publication EPA-600/9-76-015, July 1976, 269 pp.

8. Personal Communication. E. P. Crumpler, OSWMP, to J. M. Genser, Processes Research, Inc., 9 September 1976.

9. Personal Communication. E. P. Crumpler, OSWMP, to J. M. Genser, Processes Research, Inc., 12 October 1976.

10. Moselle, G., National Construction Estimator, 25th Edition. Solano Beach, California, Craftsman Book Company of America, 1977. 242 pp.

μσ1619
SW-151c