EPA-R2-73-201
MAY 1973

Environmental Protection Technology Series

Standard Dispersant Effectiveness and Toxicity Tests

National Environmental Research Center
Office of Research and Monitoring
U.S. Environmental Protection Agency
Cincinnati, Ohio 45268

RESEARCH REPORTING SERIES

Research reports of the Office of Research and Monitoring, Environmental Protection Agency, have been grouped into five series. These five broad categories were established to facilitate further development and application of environmental technology. Elimination of traditional grouping was consciously planned to foster technology transfer and a maximum interface in related fields. The five series are:

1. Environmental Health Effects Research
2. Environmental Protection Technology
3. Ecological Research
4. Environmental Monitoring
5. Socioeconomic Environmental Studies

This report has been assigned to the ENVIRONMENTAL PROTECTION TECHNOLOGY series. This series describes research performed to develop and demonstrate instrumentation, equipment and methodology to repair or prevent environmental degradation from point and non-point sources of pollution. This work provides the new or improved technology required for the control and treatment of pollution sources to meet environmental quality standards.

EPA-R2-73-201
May 1973

STANDARD DISPERSANT EFFECTIVENESS AND TOXICITY TESTS

L. T. McCarthy, Jr., I. Wilder and
J. S. Dorrler

Edison Water Quality Research Laboratory
Edison, New Jersey 08817

Program Element 1B2041

National Environmental Research Center
Office of Research and Monitoring
U.S. Environmental Protection Agency
Cincinnati, Ohio 45268

For sale by the Superintendent of Documents, U.S. Government Printing Office, Washington, D.C. 20402
Price 90 cents domestic postpaid or 65 cents GPO Bookstore

REVIEW NOTICE

The National Environmental Research Center, Cincinnati, has reviewed this report and approved its publication. Mention of trade names or commercial products does not constitute endorsement or recommendation for use.

ABSTRACT

A brief history of the development of the Standard EPA Dispersant Effectiveness and Toxicity tests is outlined. The standard tests are presented and discussed. An analysis of variance is performed on the data developed by three independent laboratories in order to determine the reproducibility of standard test procedures.

In the standard effectiveness test, oil is applied to the water surface in a cylindrical tank. Dispersant is applied in a fine stream and then mixing energy is supplied by a pressurized water stream. The tank contents are recirculated after which samples are withdrawn for extraction and spectrophotometric analysis.

The standard toxicity test involves exposing three species (*Pimephales promelas*, *Fundulus heteroclitus*, and *Artemia salina*) to dispersant and oil/dispersant mixtures. From these tests a curve relating organism survival to material concentrations is developed to determine median tolerance limits.

Separate discussion sections include the statistical analyses of "testing the test" results for reproducibility and the rationale for selecting the test procedures as presented.

ACKNOWLEDGEMENTS

The authors wish to convey their appreciation to those who contributed to the development of this report.

Special acknowledgement is given to T. A. Murphy, Ph.D., formerly Chief, Oil Spills Research Branch, Edison Water Quality Research Laboratory, and C. M. Tarzwell, formerly Director, National Marine Water Quality Laboratory, Narragansett, Rhode Island who directed the initial research efforts which developed the standard dispersant tests.

Valuable assistance in the preparation of the final manuscript and review of the contract reports were furnished by R. J. Nadeau, Ph.D., biologist, and T. Roush, biologist, of the Oil Spills Research Branch, Edison Water Quality Research Laboratory.

The author is grateful to Marion Curry, Writer-Editor, Technical Information Office, NERC, Cincinnati for her review of the original manuscript. The serveral drafts and final manuscript were typed by Ann Krypel, whose patience and forbearance is gratefully appreciated.

CONTENTS

Section		Page
I	INTRODUCTION	1
	Perspective	3
	Background	5
II	EPA STANDARD DISPERSANT TEST PROCEDURES	9
	EPA STANDARD DISPERSANT EFFECTIVENESS TEST	11
	Scope and Application	11
	Definition	11
	Summary of Method	11
	Apparatus	11
	Reagents	13
	Oils	14
	Dispersant Dosages	15
	Replications	15
	Preparation of Stock Oil Solutions	15
	Preparation of Standard Curves	15
	Procedure	16
	Calculations	18
	Test Results	20
	EPA STANDARD DISPERSANT TOXICITY TEST	22
	Scope and Application	22
	Definition	22
	Summary of Method	22
	Measures of Toxicity	22
	Selection and Preparation of Test Materials	22
	Preparation of Experimental Water	24
	Standard Freshwater Formulation	24
	Standard Seawater Formulation for Fish	24
	Standard Seawater Formulation for *Artemia*	25
	Sampling and Storage of Test Materials	25
	No. 2 Fuel Oil	26
	General Test Conditions and Procedures for Bioassay	27
	Dissolved Oxygen and Aeration	27
	Transfer of Organisms	28
	Test Duration and Observations	28
	Physical and Chemical Determinations	29
	Testing Laboratory	29
	Test Containers	29
	Preparation of Test Concentrations	31
	Calculations and Reporting	32
	Summary of Procedures	33
	BIOCHEMICAL OXYGEN DEMAND TEST	35

Section		Page
III	DISCUSSION OF DISPERSANT EFFECTIVENESS TEST	37
	Statistical Analysis	39
	Comment on Test Revisions	42
IV	DISCUSSION OF TOXICITY TEST	51
	Statistical Analysis	53
	Comment on Test Revisions	53
	REFERENCES	57

FIGURES

		Page
1.	Test Tank	12
2.	Suggested Hosing System	12
3.	Schematic Diagram of Automatic Dispensing Pipette System	30
4.	Mean and Confidence Limits (95%) of 48 Hour TL_{50} *Artemia salina* Bioassay Results for Three Laboratories	54
5.	Mean and Confidence Limits (95%) of 96 Hour TL_{50} *Fundulus heteroclitus* Bioassay Results for Three Laboratories	54

TABLES

No.		Page
1	Unit Costs vs. Cleanup Costs	4
2	Properties of Test Oils	7
3	Composition of Synthetic Sea Water	13
4	Characteristics of Test Oils	14
5	Dispersant Blank Correction Factors	19
6	Required Dispersant Effectiveness Test Results	21
7	Standard Seawater Formulation for Fish	24
8	Standard Seawater Formulation for *Artemia*	25
9	Characteristics for No. 2 Fuel Oil	26
10	Analysis of Variance	40
11	Analysis of Variation	41
12	Sources of Variation and Percent of Total Variation within 3x4x4 Factorial Design	55

SECTION I
INTRODUCTION

INTRODUCTION

Perspective

Several hundred products are currently available for the purpose of emulsifying or dispersing oil slicks (1). The products are marketed and sold throughout the country to individuals who have little or no knowledge of their relative effectiveness and toxicity. This lack of awareness is due, in part, to the unavailability of information concerning the relative advantages and disadvantages of specific dispersants, and this may result in erroneous conclusions and expensive errors in judgment.

From the consumer's point of view, the least expensive product, on a cost per gallon basis, may not necessarily be the most economical. For instance, although product A (Table 1) is less expensive on a unit cost basis than product B, it is less efficient, and therefore more expensive to use. From the environmentalists' points of view, the problem of product selection requires consideration of the toxicity, as well as the efficiency, of the dispersant being compared. It would be futile to use a particular dispersant whose toxicity was 10 times less than all other available dispersants if 10 times more material were required to disperse the same given quantity of oil. Additionally, dispersant effectiveness and toxicity must be known to realistically estimate the volume required for storage and cleanup.

Thus, the need to determine relative dispersant effectiveness and toxicity is clear. The U.S. Environmental Protection Agency (EPA) has satisfied this need according to the schedule of events that will be described shortly.

It should be emphasized at this time that the EPA Standard Dispersant Effectiveness and Toxicity Tests presented in this report are laboratory procedures only. The provide a means for conducting comparisons among diverse products manufactured to accomplish a single goal - the dispersing of oil slicks. These products are sold, without formula modifications, for use under extremely variable environmental conditions. To develop a test that would compare hundreds of products under all possible conditions would be impossible. Yet, the comparisons must be made. The dispersant tests presented in this report provide a reasonable compromise suitable for comparative laboratory testing of relative effectiveness and toxicity.

The results of the effectiveness test, therefore, should not be considered directly applicable to actual situations. The data are for comparison purposes only. Likewise, the toxicity test described in this report represents artificial conditions. It is expected, however, that the relative order of the dispersant-effectiveness and toxicity-test results would be applicable to field situations.

TABLE 1. UNIT COSTS COMPARED WITH CLEANUP COSTS

Stipulation	Dispersant A	Dispersant B
Volume of oil (gal)	100	100
Recommended application ratio (dispersant/oil)	1:5	1:10
Required volume of dispersant (gal)	20	10
Costs of dispersants ($/gal)	3	4
Cleanup costs, total $	60	40

Replication of a test organism's natural environment is extremely difficult, and thus use of a natural environment was sacrificed because of the need for constant and defined test conditions. Therefore, the data generated from toxicity tests should not be considered directly ecologically relevant. The test was not designed to provide data that could be used to directly assess the potential effect of dispersants on the biota of an aquatic system; rather, it was to provide a standard toxicity value (TL_{50}) that would be useful for comparing a dispersant's toxicity against known standards and other dispersant products. The consumer will then know that the toxicity and effectiveness values quoted by the manufacturer are comparable and reproducible in the laboratory with the use of standard procedures.

Background

In October 1968, the Federal Water Quality Administration (FWQA), a predecessor of the U.S. Environmental Protection Agency, developed and issued a policy statement on the "Use of Chemicals to Treat Oil Spills." This policy was submitted to and subsequently approved by the Secretary of the Department of the Interior, the agency under which FWQA then operated. This policy represented the first major step taken by a regulatory agency toward the rational use of chemicals, including dispersants, for the protection of the environment from oil pollution. It directed the Administration to develop a standard laboratory procedure for determining the acute toxicity of such chemicals, specifically dispersants. An Interim Toxicity Procedure was developed and subsequently published on April 28, 1969. Further improvements and modifications of these tests, which were later expanded to include the development of procedures for measuring dispersant emulsion efficiency and stability, were continued until July 19, 1969, when the procedures for toxicity and emulsion efficiency were submitted to the Assistant Secretary, U.S. Department of the Interior, for approval.

The Assistant Secretary deemed industry's acceptance of these standard procedures to be critical. The procedures were therefore reviewed for technical accuracy and scientific significance by an Ad Hoc Committee consisting of representatives from industry, state and water pollution control regulatory agencies, and the academic community.

Following the first American Petroleum Institute/Federal Water Pollution Control Administration Joint Conference on Prevention and Control of Oil Spills, held in December 1969, the Ad Hoc Committee convened and, after two days of discussion accepted the two procedures presented, with only minor technical modifications. The Committee did recommend, however, that both laboratory procedures be considered as "Tentative Assay Methods" until they had been evaluated for precision and accuracy by laboratories outside the Federal government.

Following this recommendation, bids for "testing the tests" were solicited and research contracts awarded (in April 1970) to:

Syracuse University Research Corporation
Life Sciences Division
Syracuse, New York 13210

Pacific Environmental Laboratory
657 Howard Street
San Francisco, California 94105

University of Miami
School of Marine and Atmospheric Sciences
10 Rickenbacker Causeway
Miami, Florida 33149

New England Aquarium
Central Wharf
Boston, Massachusetts 02210

Two of the laboratories (Pacific Environmental Laboratory and New England Aquarium) evaluated both the toxicity and emulsion efficiency procedures; the other two laboratories concentrated on only one of the procedures (Syracuse University Research Corporation - dispersent efficiency; University of Miami - dispersant toxicity.) In addition, all laboratories were asked to determine the biodegradability and ultimate and 5-day biochemical oxygen demand (BOD), of selected dispersants, using standard accepted procedures.

Data generated by the investigating laboratories are evaluated in this report. The recommended tests for measuring efficiency and acute toxicity of oil spill dispersants are presented and discussed.

The four laboratories participating in the study were instructed to follow the procedures presented in "Standard Tests for Measuring Oil Dispersant Toxicity and Emulsion Efficiency" (2). These procedures were published in the "Proceedings of the Joint Conference on Prevention and Control of Oil Spills," December 1969 (3 and 4). The revised procedures are presented in this report.

Four test oils were investigated during the course of the study: South Louisiana Crude Oil, Bachequero Crude Oil, Number Two Fuel Oil and Number Six Fuel Oil (Table 2). These oils were selected on the basis of their relative availability, wide range of physical and chemical properties, and high degree of spill incidents.

Four commercially available dispersants, representing the generic range of products available, were also studied:

A - water based, nonionic polyhydric alcohol ester of fatty acid.

TABLE 2. PROPERTIES OF TEST OILS

Property	So. Louisiana Crude	Bachaquero Crude	No. 2 Fuel Oil	No. 6 Fuel Oil
Gravity, API°	36.6	17	32	10
Viscosity, SUS @ 100°F	41	1500	35	4500
Pour point, °F	15	- 5	-20	60
Sulfur weight, %	0.20	2.2	0.3	2.5
Asphaltenes weight, %	0.3	7.0		10.0
Neutralization no.	0.40	2.7	0.05	2.5
Distillation volume distilled, %				
@ 300°F	18	6	5	0
@ 500°F	43	17	50	5

B - oil based, blend of anionic alkyl aryl benzene and nonionic wetting agents.

C - water based, nonionic blend of alkanol amides

D - oil based, nonionic emulsifier in petroleum based solvents.

The test oils, dispersants, test tank for dispersant effectiveness, and related equipment were supplied to the contracting laboratories by the Edison Water Quality Research Laboratory.

The military procurement specifications for oil slick solvent emulsifier, MIL-S-22864A (SHIPS) of 24 February, 1969, was used as a basis for developing the test for dispersant effectiveness described here.

The bioassay methods for determining the short-term toxicity of various materials to fishes described in Standard Methods for the Examination of Water and Wastewater" (5) were the basis for the tests described herein for determining the relative toxicity of dispersants and similar oil spill treatment products to aquatic organisms. Because of particular problems arising in the bioassay of oil and oil dispersants mixtures and the need for comparable results, certain procedures described in Standard Methods have been made more specific. The changes include the addition of special bioassay methods or organisms other than fish and the standardization of certain elements and conditions of the test such as the test species, mixing and agitation, dilution water, aeration, dissolved oxygen (DO) concentrations, temperatures, pH, and salinity.

Throughout the test period, attention was given to those aspects of the procedures that could be modified, tightened, or otherwise improved. The recommended modifications incorporated into the revised standard tests are discussed in detail in subsequent sections of this report.

SECTION II

EPA STANDARD DISPERSANT TEST PROCEDURES

EPA STANDARD DISPERSANT EFFECTIVENESS TEST

Scope and Application

This method applies to all substances defined as Dispersing Agents (or Dispersants) by the National Oil and Hazardous Substances Pollution Contingency Plan (August 1971), Annex X (6). This is the EPA standard dispersant effectiveness procedure required in Annex X of the Contingency Plan.

Definition

For the purpose of this method, the definition of Dispersing Agents (or Dispersant) in Annex X is applicable and is as follows: "Dispersing Agents are those compounds which emulsify, disperse or solubilize oil into the water column or act to further the surface spreading of oil slicks in order to facilitate dispersal of oil into the water column".

Summary of Method

Oil is applied to the surface of synthetic sea water contained in a cylindrical tank. The dispersant is applied in a fine stream to the oil and a 1.0 minute contact time is allowed for the dispersant to contact the oil. Energy is imparted to the oil/dispersant mixture by hosing and agitating the mixture with a pressurized water stream. The contents of the tank are allowed to recirculate and samples are withdrawn from the tank after 10 minutes and after 2 hours of recirculation. Oil is extracted from the samples with chloroform and the quantity of oil is spectrophotometrically determined.

Apparatus

1. Test Tank: Construct test tank, 24 inches, ID, by 28 inches high of 16-gauge stainless steel and equipment, as shown in Figure 1, with associated piping, valve, and pump for recirculation of dispersed oil and for sample collection.

2. Oil Containment Ring: Use 16-gauge stainless steel ring, 7½ inches in diameter and 9 inches in length to contain the oil while the oil contacts the dispersant. Fit the ring with clamps so that it can be placed vertically in the center of the test tank with its midpoint 16 inches above the base of the tank. Design the clamps so the ring can be quickly removed from and replaced in the tank.

3. Hosing System: Provide a pressurized hosing system suitable for delivering synthetic sea water to the oil/dispersant mixture in the test tank. A suggested hosing system is shown in Figure 2. Deliver hosing water through a 1/2-inch ID hose, which is connected to a shut-off nozzle consisting of a cast brass ball shut-off valve with

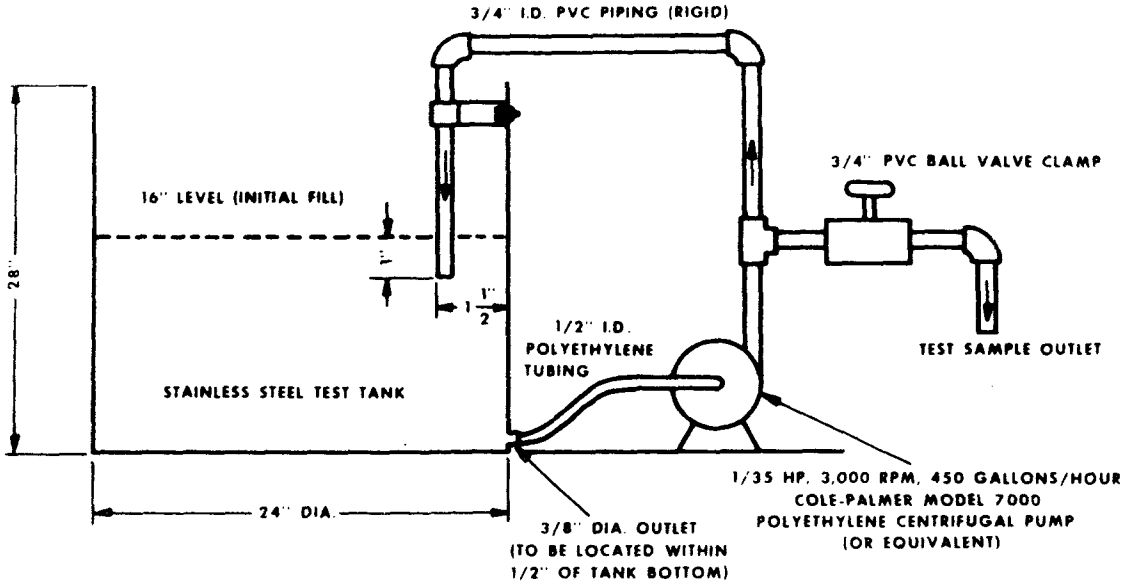

TEST TANK

Figure 1

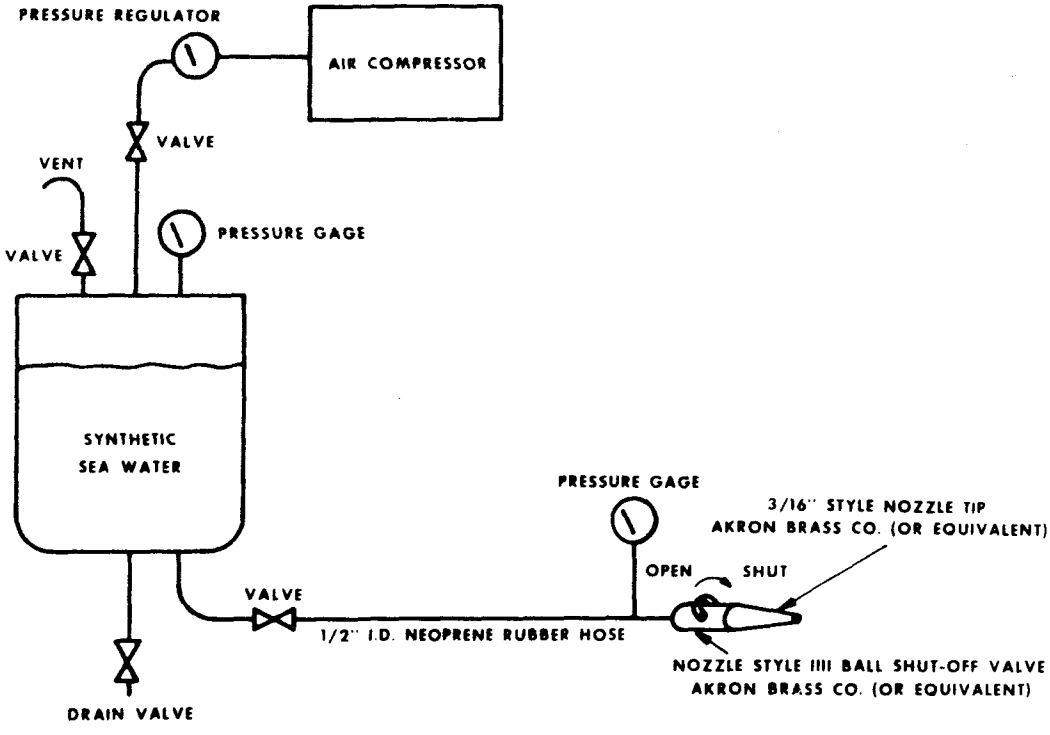

SUGGESTED HOSING SYSTEM

Figure 2

a 3/16-inch ID discharge tip. (Akron Brass Company, Style 111 shut-off valve with Style 558, 3/16-inch tip, or equal).

To obtain a 20 psig nozzle flow rate (the specified pressure during the hosing operation) hose synthetic sea water at 23 ± 1°C into a calibrated container for a predetermined time. This rate shall be 4.0 ± 0.2 gpm @ 20 psig. Use a suitable valve in the hose line to adjust and control the hosing pressure. The pressure should be determined by means of a pressure gauge in the line immediately before the nozzle or by a pitot gauge reading in the synthetic sea water stream.

Corrosion buildup within the nozzle may change hosing pressure and alter test results. To prevent this, remove and flush the nozzle with fresh water at the end of each day's tests.

4. Spectrophotometer: Use a spectrophotometer suitable for measurement at 340 mμ and 620 mμ to photometrically determine oil concentration of the oil/chloroform mixture. A Bausch and Lomb Spectronic 20 spectrophotometer (or equal) is acceptable for this purpose.

5. Dispersant Dispensing Bottle: Use a 250-ml-capacity dispensing bottle with a 3-mm orifice tip to apply dispersant to the oil in the test tank. A Fisher Scientific Company Nalgene bottle (Catalog No. 3-409-15-A) or equivalent with its fine tip cut off to expose a 3-mm opening is acceptable for this purpose.

5. Filter Paper: Use a filter paper suitable for filtering the oil/chloroform extract. Whatman No. 1 filter paper (or equivalent) is acceptable for this purpose.

Reagents

1. Synthetic Sea Water: To prepare synthetic sea water solutions, dissolve the amounts of Reagent Grade chemical salts shown in Table 3 in water having a total hardness of less than 50 mg/l:

TABLE 3. COMPOSITION OF SYNTHETIC SEA WATER

Salt	A g/l	or	B g/100 gal
NaCl	17.096		6,471
$MgCl_2 \cdot 6H_2O$	7.444		2,931
Na_2SO_4	2.852		1,080
$CaCl_2$	0.802		304
KCl	0.483		183
$NaHCO_3$	0.140		53

If any salt other than those listed above are used, allowances must be made for water of crystallation.

After dissolving the salts and thorough aeration, the resultant solution should be clear, with a pH between 7.9 and 8.3, and a salinity of 25.00 ± 0.50%.

If necessary, adjust pH to 8.0 ± 0.1 with HCl or NaOH.

Use this salt solution for initial test tank contents and for hosing during test procedure.

> Note: For convenience, a concentrated solution in an amount sufficient for 10 tests (exclusive of hosing) may be prepared by dissolving 3.13 times the quantity of salts listed in (B) above per 100 gallons. Ten gallons of this concentrated solution diluted to the 16-inch level in the test tank will provide the required salt concentration for testing.

2. Chloroform, Reagent Grade

3. Sodium Sulfate, Anhydrous, Reagent Grade

Oils

Test the dispersant with 100 ml of No. 2 Fuel Oil and No. 6 Fuel Oil. These oils shall have characteristics as defined in Table 4.

TABLE 4. CHARACTERISTICS OF TEST OILS

Characteristic		No. 2 Fuel Oil		No. 6 Fuel Oil	
		Min.	Max.	Min.	Max.
Gravity	°API	32.1	42.8	8.9	16.9
Viscosity					
Kinematic @ 100°F	(cs)	2.35	3.00	-	-
Furol @ 122°F	(SFS)	-	-	101	250
Flash point	(°F)	150	-	160	-
Pour point	(°F)	-	0	-	+35
Cloud point	(°F)	-	+10	-	-
Sulfur	(Wt %)	-	0.35	-	2.73
Aniline point	(°F)	125	180	-	-
Carbon residue	(Wt %)	-	0.16	-	12.3
Water	(Vol %)	-	0	-	0.20
Sediment	(Wt %)	-	0	-	0.10
Ash	(Wt %)	-	-	-	0.10
Aromatics	(Vol %)	10	15	-	-
Distillation					
IBP	(°F)	347	407		
10%	(°F)	402	456		
50%	(°F)	475	530		
90%	(°F)	542	606		
End point	(°F)	596	655		
Aphaltenes	(Wt %)	-	-	-	10.0
Neutralization No.		-	0.05	-	2.5

Dispersant Dosages

Test the dispersant at the following dosages:

10 ml, 25 ml, 50 ml, and 100 ml.

Replications

Replicate each test a minimum of five (5) times.

Preparation of Stock Oil Solution

Dissolve exactly 3.250 grams of test oil in 1 liter of chloroform in a 1-liter volumetric flask and mix well.

(1 ml ≃ 3.25 mg of oil)

Preparation of Standard Curves

(Suggested procedure when utilizing Bausch and Lomb Spectronic 20 spectrophotometer)

No. 2 Fuel Oil: Prepare the standard curve from the stock solution as follows:

Dilute 10 ml, 25, ml, and 50 ml of stock solution to 100 ml with chloroform in 100-ml volumetric flasks. Mix well.

Determine spectrophotometrically the Optical Density (O.D) of the stock solution and the diluted aliquots in a 1-inch cell at a wavelength of 340 mμ.

Plot the standard curve as milligrams of oil versus O.D.

No. 6 Fuel Oil: Prepare the standard curve from the stock solution as follows:

Dilute 10 ml, 25 ml, 40 ml and 50 ml of stock solution to 100 ml with chloroform in 100 ml volumetric flasks. Mix well.

Determine spectrophotometrically the O.D. of the diluted aliquots in a 1/2-inch cell at a wavelength of 620 mμ.

Plot the standard curve as milligrams of oil versus O.D.

Procedure

Step 1: Fill the test tank to a height of 16.0 inches with synthetic sea water at 23 ± 1°C.

Step 2: Clamp the oil containment ring to the test tank. The ring shall be positioned in the center of the tank with its mid-point 16 inches above the base of the tank.

Step 3: Slowly add 100 ml of the test oil at 23 ± 1°C from a 100-ml graduated cylinder with a rapid circular motion onto the water surface within the center of the ring. Care should be exerted so that oil is not lost below the ring and that oil does not contact the ring walls upon application.

Allow the oil to drain from the graduated cylinder for 3.0 minutes after application.

Weigh the graduated cylinder before and after application to determine the exact amount of oil used in the test. Record weights to 0.1 gram for use in final calculations.

Step 4: Add the dispersant at 23 ± 1°C onto the oil surface within the ring in a fine stream from the dispersant dispensing bottle, using minimum force to maintain flow of dispersant.

Add the dispersant with a rapid circular and criss-cross motion.

Carefully apply the dispersant onto the oil surface only and not through the oil surface or onto the ring walls.

Apply the dispersant during a time period of less than 2 minutes.

Weigh the dispersant dispensing bottle before and after application to determine the exact amount of dispersant used in the test. Record weights to 0.1 gram for use in final calculations.

Step 5: After completely applying the dispersant, allow an additional 1.0 minute contact time before hosing.

Step 6: Activate the hosing system, adjust nozzle pressure to 20 psig, and apply a stream of synthetic sea water at 23 ± 1°C to the oil/dispersant mixture within the ring. Immediately lift the ring out of the test tank, and simultaneously hose off the oil adhering to its inner surface. Remove the ring completely and continue to hose and agitate the oil/dispersant mixture for a total hosing period of 1.0 minute. (Flow rate of hosing nozzle must be 4.0 ± 0.2 gpm at 20 psig.)

Note: (1) Removing the ring should take no longer than 5 to 10 seconds.

(2) To hose the oil/dispersant mixture, hold the discharge tip of the nozzle approximately level with the top edge of the test tank and pointed vertically downward. Move the nozzle rapidly in a random manner from side to side, backwards and forwards, and around the inner wall of the tank, as necessary, to facilitate continuous hosing and agitation of the entire oil/dispersant surface.

Step 7: Immediately after hosing, start the recirculation pump and continue recirculation for 2.0 hours.

Step 8: After 10.0 minutes of recirculation, withdraw a 500-ml sample into a 500-ml graduate cylinder and discard. Immediately collect another 500-ml sample for determining "initial dispersion."

Step 9: After 2.0 hours of recirculation, withdraw a 500-ml sample into a 500-ml graduate cylinder and discard. Immediately collect another 500-ml sample for determining "final dispersion".

Step 10: Transfer the 500-ml sample to a 1-liter separatory funnel. Add 25 ml of chloroform to the separatory funnel, stopper funnel, and shake vigorously for 50 strokes.

After shaking, place the funnel in a rack, vent, and allow a settling time of 2 to 3 minutes.

After settling period, lift the funnel from the rack and gently invert several times. While holding the funnel, allow contents to settle and then gently swirl with a circular motion to afford additional settling of the oil/chloroform mixture.

Transfer the oil/chloroform mixture to a 250-ml Erlenmeyer flask that contains anhydrous Na_2SO_4 for drying the extract.

Repeat the extractions using a total of at least three, 25 ml portions of chloroform.

Step 11: After the oil extraction is complete, filter the combined extracts from the Erlenmeyer flask through dry filter paper into an appropriate size volumetric flask (100 ml, 250 ml, or 500 ml depending on the amount of chloroform used to complete the extraction).

Rinse the Na_2SO_4 and filter paper with small portions of chloroform to remove entrained oil.

After rinsing, fill the volumetric flask to the mark with chloroform, stopper, invert, and thoroughly mix contents.

Spectrophotometrically determine the O.D. of the extract using the identical wavelength and cell established for the test oils. From the standard curve for the test oil, determine the quantity of oil in milligrams.

Step 12: Blank Correction Determination

Perform test with 100 ml dispersant in the absence of oil with the following modifications:

(a) Add dispersant from a 100-ml graduate cylinder (calibrated to contain 100 ml) into synthetic sea water in test tank without the oil containment ring.

(b) Allow the dispersant to drain from the graduated cylinder for 3.0 minutes after application.

(c) Using 50 ml of synthetic sea water, rinse the dispersant from the graduate into the tank. Repeat rinsing two times.

Continue test procedure Step 6 through Step 11. The total volume of dispersant/chloroform extract shall not exceed 100 ml.

Spectrophotometrically determine the O.D. of the extract using the identical wavelength and cell established for the test oils. From the standard curve for each test oil, determine the dispersant interference expressed as milligrams of oil. This quantity of oil, referred to as "X" in the table under Calculations, is the blank correction for 100 ml dispersant in 100 ml total extract.

Additional blank corrections for other test conditions can be determined by multiplying "X" by the appropriate factors indicated in the table.

Calculations

1. Dilution Factor (DF): The dilution factor is 1, 2.5, or 5 depending upon whether the total volume of oil/chloroform extract was 100 ml, 250 ml, or 500 ml, respectively.

2. Oil Conversion Factor (OCF): Calculate the OCF as follows:

$$OCF = \frac{\text{Sp Gr of oil} \times 100 \text{ ml}}{\text{grams of test oil applied}}$$

3. Dispersant Conversion Factors (DCF): Calculate the DCF as follows:

For 10 ml dispersant:

$$DCF = \frac{\text{Sp Gr of dispersant} \times 10 \text{ ml}}{\text{grams of dispersant applied}}$$

For 25 ml dispersant:

$$DCF = \frac{\text{Sp Gr of dispersant} \times 25 \text{ ml}}{\text{grams of dispersant applied}}$$

For 50 ml dispersant:

$$DCF = \frac{\text{Sp Gr of dispersant} \times 50 \text{ ml}}{\text{grams of dispersant applied}}$$

For 100 ml dispersant:

$$DCF = \frac{\text{Sp Gr of dispersant} \times 100 \text{ ml}}{\text{grams of dispersant applied}}$$

The specific gravity @ 60/60F should be determined to ± 0.0001.

4. Blank Correction (BC): Calculate BC (expressed as milligram of oil) for the dispersant as outlined in Table 5.

TABLE 5. DISPERSANT BLANK CORRECTION FACTORS

Volume of test dispersant	Blank correction (mg of oil) Volume of chloroform extract		
	100 ml	250 ml	500 ml
100 ml	X*	0.40X	0.20X
50 ml	0.50X	0.20X	0.10X
25 ml	0.25X	0.10X	0.05X
10 ml	0.10X	0.04X	0.02X

*Refer to Step 12 of Procedure for determination of "X."

5. Milligrams of Oil Equivalent to 100% Dispersion: Complete dispersion (100%) of 100 ml of test oil in the testing procedure is equivalent to 0.749 ml of oil/liter of sample after completion of tank test procedure.

Convert the above volume of oil (0.749 ml/liter) to milligram of oil per 500 ml sample (the quantity of sample required in the test procedure) as follows:

Milligrams of oil equivalent to 100% dispersion =

$$\frac{500 \text{ ml sample} \times 0.749 \text{ ml}}{1000 \text{ ml sample}} \times \text{Sp Gr of Oil} \times \frac{1000 \text{ mg}}{\text{gram}} =$$

$$375 \times \text{Sp Gr of oil}$$

This result, expressed in milligrams, is equivalent to 100% dispersion of 100 ml of test oil per 500 ml sample after completion of tank testing procedure.

6. Percent Dispersion: Calculate the percent dispersion as follows:

Percent dispersion =

$$\frac{(\text{mg oil from standard curve} \times \text{DF} \times \text{OCF} \times \text{DCF}) - \text{BC} \times 100}{\text{mg oil equivalent to 100\% dispersion}}$$

Test Results

1. Based on 100 ml of oil, determine the percent dispersion of each of the two test oils caused by 10, 25, 50, and 100 ml of dispersant:

   (a) after 10 minutes recirculation ("initial dispersion");

   and

   (b) after 2 hours recirculation ("final dispersion").

2. Determine the mean of at least 5 replicate tests for each of the four dispersant dosages. If the percent dispersion value found (after the 10-minute recirculation period only) for any of the 5 replicate tests varies from the mean value by more than $\pm$ 8, discard that result and run another replicate.

3. For each test oil, using percent dispersion as the ordinate and dispersant dosage (ml) as the abscissa, plot two graphs, one for "initial dispersion" and the other for "final dispersion." Draw the graphs by plotting mean percent dispersion values for each of the dispersant dosages (10, 25, 50, and 100 ml) and connecting in a straight line fashion each of the data points. From the "initial dispersion" graph, determine the dispersant dosage (ml) causing 50% dispersion. From the "final dispersion" graph, determine the dispersant dosage (ml) causing 25% dispersion.

4. When reporting test results, provide the following information for each of the two test oils:

TABLE 6. REQUIRED DISPERSANT EFFECTIVENESS TESTS RESULTS

Volume Dispersant, ml	Initial dispersion (10 minutes)		Final dispersion (2 hours)	
	% Dispersion for replicate #	Mean % dispersion	% Dispersion for replicate #	Mean % dispersion
10	1 - 2 - 3 - 4 - 5 -	-	1 - 2 - 3 - 4 - 5 -	-
25	1 - 2 - 3 - 4 - 5 -	-	1 - 2 - 3 - 4 - 5 -	-
50	1 - 2 - 3 - 4 - 5 -	-	1 - 2 - 3 - 4 - 5 -	-
100	1 - 2 - 3 - 4 - 5 -	-	1 - 2 - 3 - 4 - 5 -	-
	Dosage (ml) causing 50% dispersion (from "initial dispersion" graph) _____ml		Dosage (ml) causing 25% dispersion (from "final dispersion" graph) _____ml	

EPA STANDARD DISPERSANT TOXICITY TEST

Scope and Application

This method applies to all substances defined as Dispersing Agents (or Dispersants) by the National Oil and Hazardous Substances Pollution Contingency Plan (August 1971), Annex X (6). This is the EPA standard dispersant toxicity procedure required in Annex X of the Contingency Plan.

Definition

For the purpose of this method, the definition of Dispersing Agents (or Dispersants) in Annex X is applicable and is as follows: "Dispersing Agents are those compounds which emulsify, disperse or solubilize oil into the water column or act to further the surface spreading of oil slicks in order to facilitate dispersal of oil into the water column."

Summary of Method

The standard toxicity test for dispersants involves exposing three species (*Pimephales promelas*, *Fundulus heteroclitus*, and *Artemia salina*) to five different concentrations of each dispersant alone and in mixture with the recommended test oil in a ratio of 1:10 (dispersant to oil). From these tests, a curve relating to the survival of the organisms to the concentrations of the test material can be generated that allows the determination of median tolerance limits. To ensure consistency in the assays carried out by different workers and to detect any changes in the condition of the test organisms that might lead to different results, reference bioassays will be made with docyl sodium sulfate in addition to the usual control tests.

Measures of Toxicity

Express bioassay results in terms of tolerance limits (TL). Along with the symbol TL, the time of exposure and the percentage of fish surviving are indicated. For example, a 96-hour TL_{50} of a toxic substance is that concentration in which 50% of the fish survive for 96 hours. The TL_{50} is equivalent to the median tolerance limits (TL_{50}).

Determine the 96-hour TL_{50} for the fish bioassays and 48-hour TL_{50} for the *Artemia* bioassays.

Selection and Preparation of Test Materials

1. *Test Organisms:* The test organisms will be: freshwater-fathead minnow (*Pimephales promelas*); saltwater-mummichog (*Fundulus heteroclitus*); and brine shrimp (*Artemia salina*).

2. Preparation of Test Organisms: Obtain test fish from a common source for any one series of bioassays. Report any known unusual condition to which fish were exposed before use (e.g., pesticides or chemotherapeutic agents); avoid if possible. Use small fish preferably 1 to 1-1/2 inches in length and weighing about 1 gram. The longest individual should be no more than 1.5 times the length of the smallest.

Acclimate test fish for use in the bioassays to the selected temperature and salinity for a period of 10-14 days before being used for the bioassays to determine relative toxicity. Disregard groups of fishes having more than 20% mortality during the first 48 hours and more than 5% thereafter. During acclimation, feed all species a balanced diet. Dry, pelleted, commercially available fishfood containing 30-45% protein is satisfactory. The protein source will be fishmeal, alone or with other animal protein. The pellets should be of a size for ready consumption by the test fish. Feed the fish twice daily to satiation, but not for 48 hours before or during the bioassay test. Use only those organisms that feed actively and appear to be healthy. Discard any individuals injured or dropped while handling. During acclimation of marine species, keep water temperatures at a final level of 20 $\pm$ 1°C; pH at a level of 8.0 with a variation of $\pm$ 0.1 unit; and salinity at a level of 20 $\pm$ 0.5 ppt. Acclimate freshwater species to a water temperature of 25 $\pm$ 1°C and a pH of 7.5 to 7.8. Keep oxygen levels above 4 ppm, preferably between 5-6 during the acclimation period. Run all tests in a series with organisms from the same group.

To ensure uniformity of Artemia, secure the eggs from the San Francisco Bay area. Since the eggs of Artemia may be kept dessicated for long periods in a viable state, required numbers of the organism can be secured at any time for use in the bioassay tests through the use of proper hatching procedures.

A rectangular tray (plastic, glass, or enamel) having 200 square inches of bottom surface is suitable for hatching Artemia eggs. Divide this tray into two parts by a partition that extends from the top down to about 0.75 to 0.5 inch from the bottom. This partition may be of any opague, biologically inert material (a pasteboard strip, sealed with paraffin wrapping, is satisfactory.) Raise one end of the tray about 0.5 inch and add 3 liters of the standard seawater formulation (See Table 8.) Spread 0.5 gram of brine shrimp eggs in the shallow end of the tray. Cover this end of the tray with a piece of cardboard to keep the eggs in darkness until hatching is complete. About 20 hours after the eggs hatch, direct a narrow beam of light across the uncovered portion of the tray. Since the brine shrimp are phototactic, they will swim beneath the partition into the illuminated end of the chamber and congregate in the beam of light. The Artemia concentrated in the beam of light can be easily collected with the use of a collecting pipette or siphon connected

to a 12-inch rubber tube and mouthpiece. Transfer them to a beaker having a small amount of the artificial seawater.

Preparation of Experimental Water

Because large quantities of dilution water will be used in these tests, formulate the experimental water in large batches to ensure uniformity and constant condition for the various tests. To prevent contamination, prepare and store the experimental water in fiber glass containers of suitable size.

Standard Freshwater Formulation

Prepare the standard freshwater as follows: bubble CO_2 through 10 liters of distilled water containing 2.1 gram of $CaCO_3$ to convert it to a clear solution of $Ca(HCO_3)_2$. Dilute this solution with 20 liters of distilled water and add 30 ml of a mixed salt solution. To prepare this mixed salt solution dissolve 23.4 grams of NaCl, 73.9 grams $MgSO_4 \cdot 7H_2O$ and 4.4 grams K_2SO_4 in distilled water and dilute to 1 liter.

Use any multiple of these volumes and weights to secure desired volumes of the standard water. This water is very close in dissolved materials to the average natural stream water of the United States. When preparing the standard freshwater, use distilled water from a glass still or from a tin-lined still to ensure the absence of metal ions. The pH of this water shall be in the range of 7.6 to 7.8; to adjust, add or remove CO_2.

Standard Seawater Formulation for Marine Fish

To prepare standard seawater for marine fish, mix technical grade salts with 900 liters of distilled or demineralized water in the order and quantities listed in Table 7. These ingredients must be added in the order listed and each ingredient must be dissolved before another is added. Sitr constantly during preparation to accomplish this.

TABLE 7. STANDARD SEAWATER FORMULATION FOR MARINE FISH

Ingredient	Amount, grams	Ingredient	Amount, grams
$SrCl_2 \cdot 6H_2O$*	20	$MgCl_2 \cdot 6H_2O$	5000
H_3BO_3	30	NaCl	23500
KBr	100	$Na_2SiO_3 \cdot 9H_2O$	20
$CaCl_2 \cdot 2H_2O$	1100	EDTA** -tetra sodium salt*	3

*Reagent grade if technical grade not available.
**Ethylene diamine tetracetate.

Add distilled or demineralized water to make up to 1000 liters. The pH should now be 8.0 ± 0.1. To attain the desired salinity of 20 ± 0.5 ppt at time of use dilute with distilled or demineralized water.

Standard Seawater Formulation for Artemia

The standard seawater used in bioassays with *Artemia* is prepared in the same manner and is essentially the same water used in the fish bioassays. Because much smaller quantities are needed, the formulation in Table 8 is suggested.

To formulate this water, mix technical grade salts with distilled or demineralized water in the order and quantities listed in Table 8. Dilute the final water with distilled or demineralized water to achieve a salinity of 22 ppt. If necessary, add $NaHCO_3$ to adjust final pH of water to between 8.0 and 8.2. Before the water is used, filter it through a 0.22 micron Millipore filter under vacuum.

TABLE 8. STANDARD SEAWATER FORMULATION FOR *ARTEMIA*

Ingredient	Amount, grams	Ingredient	Amount, grams
$SrCl_2 \cdot 6H_2O$	0.02	$MgCl_2 \cdot 6H_2O$	10.00
H_3BO_3	0.03	NaCl	23.50
KBr	0.10	$Na_2SiO_3 \cdot 9H_2O$	0.02
$CaCl_2 \cdot 2H_2O$	1.10	EDTA**	0.003
Na_2SO_4	4.00		

*Ethylene diamine tetracetate
Ingredients are dissolved in 900 ml of water in order given and solution is diluted to 1 liter.

Sampling and Storage of Test Materials

Store oil used in bioassays in sealed containers to prevent the loss of volatiles and other changes. For ease in handling and use, it is recommended that 100 ml glass containers be used and a minimum of 40 containers of each grade or kind of oil under test be available. To ensure comparable results in the bioassay tests, use oils packaged and sealed at the source. Dispose of unused oil in each open container on completion of the dosing to prevent its use at a later date when it has lost its volatiles. Run all tests in a bioassay series with oil from the same container and with organisms from the same group collected or secured from the same source.

No. 2 Fuel Oil

Perform the dispersant bioassays with No. 2 Fuel Oil having the characteristics defined in Table 9.

TABLE 9. CHARACTERISTICS OF NO. 2 FUEL OIL

Characteristic		Minimum	Maximum
Gravity	^{o}API	32.1	42.8
Viscosity			
Kinematic @ 100°F	(cs)	2.35	3.00
Furol @ 122°F	(SFS)	-	-
Flash point	(^{o}F)	150	-
Pour point	(^{o}F)	-	0
Cloud point	(^{o}F)	-	+10
Sulfur	(Wt %)	-	0.35
Aniline point	(^{o}F)	125	180
Carbon residue	(Wt %)	-	0.16
Water	(Vol %)	-	0
Sediment	(Wt %)	-	0
Ash	(Wt %)	-	-
Aromatics	(Vol %)	10	15
Distillation			
IBP	(^{o}F)	347	407
10%	(^{o}F)	402	456
50%	(^{o}F)	475	530
90%	(^{o}F)	542	606
End point	(^{o}F)	596	655
Aphaltenes	(Wt %)	-	-
Neutralization no.		-	0.05

General Test Conditions and Procedures for Bioassay

Temperature: For these bioassays, use test solutions with temperatures of 25 ± 1°C for freshwater species and 20 ± 1°C for salt water species.

Dissolved Oxygen and Aeration

1. Fish: Because oils and dispersants contain volatile materials, many of which are toxic and because the toxicity of some water-soluble fractions of oil and degradation products are changed by oxidation, special care must be used in the oxygenation of test solutions. Initiate aeration to provide DO and mixing after the fish are added. The DO content of test solutions must not drop below 4 ppm. To limit the removal of volatiles, keep aeration to a minimum: aerate only enough to keep the DO concentration about 4 ppm. Aerate at a rate of 100 ± 15 bubbles per minute supplied from a 1-ml serological pipette having a 1-mm ID. At this rate and with the proper weight of fish, DO concentration can be maintained slightly above 4 ppm over a 96-hour period. Take DO measurements at least daily.

2. Artemia: The surface area of the test solution exposed in relation to volume is so large that DO is not a problem. Oxygen content remains high throughout the assay because of the small quantity of test substances added and the low oxygen demand of organisms in each dish.

3. Controls: With each fish or Artemia test or each series of simultaneous tests of different solutions, perform a concurrent control test in exactly the same manner as the other tests and under the conditions prescribed or selected for those tests. Use the experimental water or diluent alone as the medium in which the controls are held. There must be no more than 10% mortality among the controls during the course of any valid test and at least 90% must remain apparently healthy.

   To ensure consistency in the assays carried out by different workers and to detect changes in the condition of the test organisms that might lead to different results, perform reference bioassays made with reagent grade dodecyl sodium sulfate (DSS) commonly known as sodium lauryl sulfate in addition to the usual control tests. To prepare a stock solution of DSS with either the fresh or salt water formula, immediately before use add 1 gram of DDS per 500 ml solution. When all conditions of the bioassay are met and the outlined tests are carried out, results of bioassays made in different areas and by different investigators will be comparable and serve to indicate the relative toxicity of different dispersants and oil/dispersant mixtures. Use exploratory tests before the full-scale tests are begun to determine the amount of reference standard to be used in each of the five different concentrations.

4. Number of Organisms: For the bioassay procedures utilizing fish place two fish in each jar. For the bioassay utilizing *Artemia*, place 20 larvae in each container.

Transfer of Organisms

Transfer fish from the acclimatizing aquaria to the test containers only with small-mesh dip nets of soft material and do not rest on any dry surface. Do not hold out of the water longer than necessary. Discard any specimen accidentally dropped or otherwise mishandled during transfer.

Artemia can be conveniently handled and transferred with a small pipette connected to a 12-inch rubber tubing and mouthpiece. To have the necessary *Artemia* ready for the study, transfer 20 *Artemia* into small beakers containing 20 ml of artificial seawater. Hold these batches of *Artemia* until they are 24 hours old; at that time, place them in the respective series of test concentrations set up for the bioassay.

To avoid large fluctuations in the metabolic rate of organisms and the fouling of test solutions with metabolic waste products and uneaten food, do not feed organisms during tests.

Test Duration and Observations

1. Fish: Observe the number of dead fish in each test container and record at the end of each 24-hour period. Fish are considered dead upon cessation of respiratory and all other overt movements, whether spontaneous or in response to mild mechanical prodding. Remove dead fish as soon as observed.

   Also note and report when the behavior of test fish deviates from that of control fish. Such behavioral changes would include variations in opercular movement, coloration, body orientation, movement, depth in container, schooling tendencies, and other. Abnormal behavior of the test organisms is a desirable parameter to monitor in a bioassay because changes in behavior and appearance may preceed mortality. Toxicants can reduce an organism's ability to survive natural stresses. In these cases, the mortality is not directly attributed to the toxicant, but most certainly is an indirect effect. Reports on behavioral changes during a bioassay can give insight into the nonacute affects of the tested material.

   At the end of the 96-hour period, terminate the fish assays and determine the TL_{50} values.

2. *Artemia*: Terminate the *Artemia* test after 48 hours of incubation. To count the dead animals accurately and with relative ease, place the test dishes on a black surface and hold a narrow beam of light parallel to the bottom of the dish. Most of the dead *Artemia* will

be on the bottom of the test dish and can be readily seen against the black background. Also search the top of the liquid for Artemia trapped there by surface tension. Exercise caution when determining death of the animals. Occasionally, an animal appears dead, but closer observation shows slight movement of an appendage or a periodic spasm of its entire body. For this test, animals exhibiting any movement when touched with a needle are considered alive. Account for all test animals to ensure accuracy since some Artemia may disintegrate and lose integrity. Consider individuals not accounted for as dead.

Physical and Chemical Determinations

Determine the temperature, DO, and pH of test solutions and the measurable toxicant concentrations before introducing the organism, and as soon as possible after the death of all or most of the organisms, or at the end of a test where organisms are still alive. The additional determinations of temperature and DO are needed for proper control of test conditions and to facilitate interpretation and application of the bioassay results, make them at regular intervals.

Testing Laboratory

An ordinary heated or air-conditioned laboratory room with thermostatic controls suitable to maintain prescribed test temperatures generally will suffice to conduct the bioassays. Where ambient temperatures cannot be controlled to the required temperature range, use water baths with the necessary temperature controls.

Test Containers

Process all required glassware before each assay. Immerse in normal hexane for 10 minutes. Follow this with a thorough rinse with hot tap-water, three hot detergent scrubs, an additional hot tap-water rinse, and three rinses with distilled water. Oven or air dry the glassware in a reasonably dust free atmosphere.

For fish tests, use 4-liter glass jars measuring approximately 22.5 cm high, 15 cm in diameter, and 11 cm in diameter at the mouth. The jars are to have screw top lids, lined with aluminum foil. In carrying out the test, add 2 liters of the standard seawater formulation aerated to saturation with DO to each of the jars. To add the 2 liters easily and accurately, use a 2-liter capacity, automatic dispensing pipette (Figure 3).

For the Artemia tests, use Carolina culture dishes (or their equivalent) having dimensions approximately 3-1/2 by 1-1/2 inches.

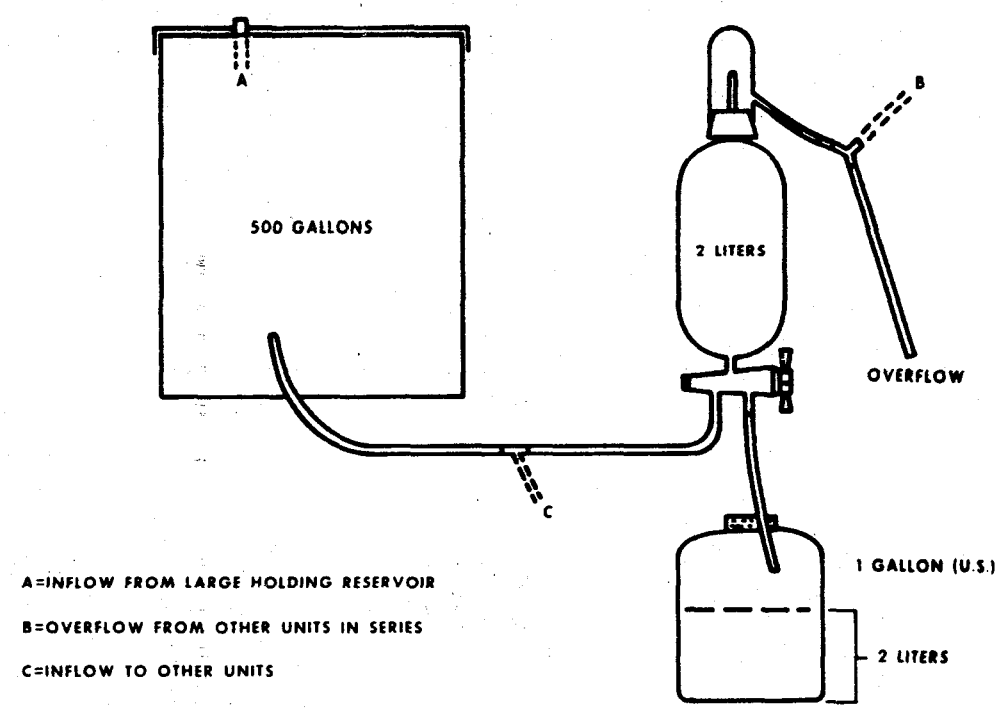

SCHEMATIC DIAGRAM OF AUTOMATIC DISPENSING PIPETTE SYSTEM

Figure 3

Preparation of Test Concentrations

1. Fish: Place the test jars containing 2 liters of standard water on a reciprocal shaker. The shaker platform should be adapted to firmly hold six of the bioassay jars. Add the desired amount of the petroleum product under test with a calibrated syringe directly to each test jar. Dispense the appropriate amount of the dispersant-standard water stock into the jars with a pipette. Tightly cap the test jars and shake for 5 minutes at approximately 315 to 333 three-quarter-inch strokes per minute in a reciprocal shaker. At the completion of shaking, remove the jars from the shaker to a constant-temperature water bath or room, remove the lids, and add two test fish.

2. Artemia: To prepare test solutions for dispersants and oil/dispersant mixtures: (1) Blend or mix with an electric blender having speeds of 10,000 to 20,000 rpm or less, a stainless steel cutting assembly, and 1-liter borosilicate jar. To minimize foaming, blend at speeds below 10,000 rpm. (2) For the dispersant test solution, add 550 ml of the standard seawater to the jar, then with the use of a gas-tight calibrated glass syringe with a Teflon-tipped plunger, add 0.55 ml of the dispersant and mix for 5 seconds. (3) For the oil/dispersant mixture, add 550 ml of the standard seawater to the mixing jar. While the blender is in operation, add 0.5 ml of the oil under study with the use of calibrated syringe with Teflon-tipped plunger and then 0.05 ml of the dispersant as indicated above. Blend for 5 seconds after addition of dispersant. These additions provide test solutions of the dispersant and the oil/dispersant mixture at a concentration of 1000 ppm of dispersant and oil/dispersant combination, respectively, and in a 1:10 ratio of dispersant to oil.

3. Fish and Artemia: Immediately after the test solution of the dispersant or oil/dispersant solution is prepared, with the use of a gas-tight Teflon-tipped glass syringe of appropriate size, draw up the necessary amount of test solution and dispense into each of the five containers in each series. If the series of five concentrations to be tested are 10, 18, 32, 56, and 100 ppm, the amount of the test solution in the order of the concentrations listed above would be as follows: 1, 1.8, 3.2, 5.6 and 10 ml.

   Each time a syringe is to be filled for dispensing to the series of test containers, start the mixer and withdraw the desired amount in the appropriate syringe while the mixer is in operation. Turn off immediately after the sample is taken to limit the loss of volatiles.

   Use exploratory tests before the full-scale test is set up to determine the concentration of reference standard to be used in each of the five different concentrations. After adding the required

amounts of liquid bring the volume in each of the test containers up to 80 ml with the artificial seawater. To ensure keeping each of the series separate, designate on each lid of the test containers the date, the material under test, and its concentration.

When the desired concentrations are prepared, gently release into each dish the 20 test Artemia (previously transferred into 20 ml of medium). This provides a volume of 100 ml in each test chamber. A pair of standard cover glass forceps with flat, bent ends is an ideal tool for handling and tipping the small beaker without risk of contaminating the medium.

After added the test animals, incubate the assay dishes at 20°C for 48 hours. Recommended lighting is 2100 lumens/m^2 (200 ft-c) of diffused, constant, fluorescent illumination coming from beneath the culture dishes during incubation. Because Artemia are phototatic, bottom lighting should keep them from direct contact with the oil that sometimes layers on top.

Wash the blender thoroughly after each use and repeat the above procedures for each series of tests. To wash the blender: (1) Pour a strong solution of laboratory detergent into the blender to cover the blades. (2) Fill the container about half of its volume with hot tap-water. (3) Operate the blender for about 30 seconds at high speed. (4) Remove and rinse twice with hot tap-water, mixing each rinse for 5 seconds at high speed. (5) Rinse twice with distilled water, mixing each rinse for 5 seconds at high speed.

Calculations and Reporting

At the end of the test period, the bioassays are terminated and the TL_{50} values are determined.

1. Calculations: A TL_{50} is a concentration at which 50% of the experimental animals survived, or it is an interpolated value based on percentages of organisms surviving at two or more concentrations, at which less than half and more than half survived. Estimating the TL_{50} by interpolation involves plotting the data on semilogarithmic coordinate paper with concentrations on the logarithmic axis and percentage survival on the arithmetic axis. A straight line is drawn between two points representing survival at the two successive concentrations that were lethal to more than half and to less than half of the organisms. The concentration at which the line crosses the 50% survival line is the TL_{50} value.

2. Reporting: The tested dispersant and oil and their source and storage are described in the bioassay report. Note any observed changes in the experimental water or the test solutions. Also include the species of fish used, the source, size, and condition of the fish, data on any known treatment of the fish for disease or infestation with parasites before their use, and any observations on the fish

behavior during tests. In addition to the calculated TL_{50} values, data used to make the calculations (i.e., the percent survival at the end of each day of exposure at each concentrations of toxicant) must be reported.

Summary of Procedures

1. Fish:

   a. Prepare adequate stocks of the appropriate standard dilution water.

   b. Add 2 liters of the standard dilution water to the 4-liter test jars. The 5 repetitions of each of 5 dispersant or oil/dispersant concentrations will require 35 jars.

   c. Add the determined amount (quarter points on the log scale) of test material to the respective jars with gas-tight, Teflon-tipped glass syringe.

   d. Cap the jars tightly with the aluminum-foil-lined screw caps and shake for 5 minutes at 315 to 333 three-quarter-inch strokes per minute on a reciprocal shaker.

   e. Remove the jars from the shaker, and add 2 acclimated fish per jar. Execute these operations at 20 $\pm$ 1°C for marine fish and 25 $\pm$ 1°C for freshwater fish.

   f. To maintain oxygen levels above 4 ppm, aerate with 100 $\pm$ 15 bubbles per minute through a 1 ml serological pipette with an ID of 1 mm.

   g. Observe and record mortalities and behavioral changes each 24 hours.

   h. After 96 hours, terminate the assay, and plot the data on semi-log graph paper to determine TL_{50}.

2. Artemia

   a. Initiate the procedure for hatching the *Artemia* the day before the bioassay is to be conducted so that 24-hour-old larvae are available.

   b. With the use of the small pipette, transfer 20 *Artemia* into each of 35 small beakers each containing 20 ml of the proper artificial seawater.

   c. To prepare the test stock dispersant solution, add 550 ml of the artificial seawater to the prescribed blender jar. By

means of a gas-tight glass syringe with a Teflon-tipped plunger, add 0.55 ml of the dispersant and mix at 10,000 rpm for 5 seconds.

To prepare the test stock oil/dispersant mixture, add 550 ml of the standard seawater to the blender jar. While the blender is in operation (10,000 rpm), add 0.5 ml of the oil, then 0.05 ml of the dispersant with the use of a calibrated syringe with a Teflon-tipped plunger. Blend for 5 seconds after adding the dispersant. One ml of these stock solutions added to the 100 ml of standard seawater in the assay containers yields a concentration of 10 ppm dispersant or oil/dispersant combination and the latter will be in a ratio of 1 part dispersant to 10 parts of oil.

d. Each test consists of 5 replications of each of 5 concentrations of the material under study, a control series of 5 dishes, and a standard reference series of 5 different concentrations, a total of 35.

Immediately after preparing the test solution of the dispersant or oil/dispersant solution, and using an appropriately sized syringe, draw up the necessary amount of test solution and dispense into each of the five containers in each series.

Each time a syringe is to be filled for dispensing to the series of test containers, start the mixer and withdraw the desired amount in the appropriate syringe while the mixer is in operation. Turn mixer off immediately after the sample is taken to limit the loss of volatiles.

After adding the required amounts of the test oil/dispersant or dispersant mixture, bring the volume of liquid in each of the test containers up to 80 ml with the artificial seawater.

When the desired concentrations are prepared, gently release into each dish the 20 test animals previously transferred into 20 ml of medium. This provides a volume of 100 ml in each test chamber. A pair of standard cover glass forceps with flat, bent ends is an ideal tool for handling and tipping the small beaker without risk of contaminating the medium.

e. Wash the blender as prescribed for each series of tests.

f. Incubate the assay dishes at 20 $\pm$ 1°C for 48 hours with the prescribed lighting.

g. Terminate the experiment after 48 hours, observe and record the mortalities, and determine the TL_{50} as prescribed.

BIOCHEMICAL OXYGEN DEMAND TEST

Since biodegradability or oxygen demand factors have a substantial bearing on the selection of a particular chemical material to treat oil floating on water, 5-day BOD data on dispersants must be submitted to EPA.

The procedure to be used for this determination is found in:

> Standard Methods for the Examination of Water and Wastewater, 13th Edition, p. 489, Method 219 (1971),
>
> or
>
> ASTM Standards, Part 23, Water; Atmospheric Analysis, p. 712, Method D - 2329-68 (1970).

SECTION III
DISCUSSION OF DISPERSANT EFFECTIVENESS TEST

DISCUSSION OF DISPERSANT EFFECTIVENESS TEST

Statistical Analysis

According to test requirements, each laboratory conducted at least three replicate series of tests on each of the 16 oil/dispersant combinations. Additional testing, as procedural modifications were incorporated into the test routine, produced a total of over 380 analyses from each laboratory. Several procedural discrepancies, attributable to the preliminary nature of the original test procedure, were discovered, however, when the results from all laboratories were compared. Therefore, a complete statistical analysis could not be performed on the entire set of data.

The analysis of variance of the standard percent dispersion for 10 ml of dispersant, one of several data points common to all laboratories which could be statistically examined, is presented in Table 10. The 10 ml point was chosen for analysis because it provided a realistic indication of the degree of reproducibility among laboratories and is one of the points required in the revised test procedure.

A four by four nested factorial design was used to determine that part of the total variation attributable to each of the four major experimental variables represented in Tables 10 and 11 by the following symbols:

O - Oils (4 types)

L = Laboratories (3 contracts)

D = Dispersants (4 products)

R = Replicates (3 of each test combination)

An F-test was applied to determine if each source of variation was significant at the 95% confidence level.

The results of the analysis presented in Table 10 indicate that replication was involved in every instance where there was no statistical difference. This is to be expected as replication tends to dampen variation within test runs. Eliminating replication as a source of variation and analyzing only the oils, dispersant, laboratories, and their interactions yields the results presented in Table 11.

Examination of Table 11 reveals that (1) the variations among oils, dispersants, laboratories, and their interactions are statistically significant 99% of the time; (2) major variation is, as expected, the result of the four different oils and four different dispersant; and (3) the variation that results from the laboratories is approximately 11% of the

TABLE 10. ANALYSIS OF VARIANCE

Source of variation	Sums of squares	Degress of freedom	Means squares	% of total	$F_{0.95} = \frac{MS}{HSR}$	Significant difference
O	15033	3	5011	31.7	87.9	Yes
L	3152	2	1576	9.9	27.7	Yes
D	17720	3	5097	37.4	103.7	Yes
R	1849	2	924	5.8	16.2	Yes
OL	1201	6	200	1.2	3.5	Yes
OD	5361	9	596	3.7	10.5	Yes
LD	5456	6	909	5.7	16.0	Yes
OR	229	6	38	2.1	0.7	No
LR	189	4	47	0.2	0.8	No
DR	739	6	123	0.7	2.2	No
OLD	5466	18	304	1.9	5.3	Yes
OLR	591	12	49	0.3	0.9	No
ODR	562	18	31	0.1	0.5	No
LDR	327	12	27	0.1	0.5	No
OLDR	985	36	27	0.1	0.5	No

TABLE 11. ANALYSIS OF VARIATION

Source of variation	Sum of squares	Degree of freedom	Mean squares	% of total	$F_{0.99}$	Significant difference
Main effect						
O	15,033	3	5,011	34.6	88	Yes
L	3,152	2	1,567	10.8	28	Yes
D	17,720	3	5,907	40.8	10.0	Yes
Two-factor interaction						
OL	1,201	6	200	1.4	3.5	Yes
OD	5,361	9	596	4.1	10	Yes
LD	5,456	6	909	6.3	16	Yes
Three-factor interaction						
OLD	5,466	18	304	2.1	5.3	Yes
Sum	53,389	47	14,494			

total variance. This includes the variation due to the procedure, as well as to inherent laboratory variation resulting from any inconsistencies in equipment performance, ambient temperature, personal habits, etc. On the whole, an 11% variation is not considered excessive. However, considerable effort has been expended to tighten the test procedure, and thereby reduce variation and increase reproducibility.

Comments on Test Revisions

The statistical analysis of the dispersant effectiveness test results, discussed above, indicated that 11% of the total variance in test results was attributable to differences among the laboratories. A comprehensive review of the procedures carried out by each laboratory, as well as a careful evaluation of the original test method, identified the need for certain procedural modifications that should significantly improve both the methodology and the reproducibility of the test, and consequently, reduce laboratory variation to a minimum.

These revisions include clarification and expansion of critical aspects of the test not clearly defined in the original procedure, as well as incorporation of modifications and recommendations suggested by the laboratories.

The original test procedure was difficult for the reader to follow because several other documents had been incorporated by reference. All such cross-references have been eliminated from the revised procedure, which makes it easier to follow now. The new format should eliminate some of the misinterpretation associated with the testing requirements and procedural steps of the original procedure.

Critical testing criteria, i.e., temperature and time, are now clearly defined in each and every step of the testing procedure where appropriate.

Precautionary statements, particularly in reference to oil and dispersant applications and agitation by hosing, as well as instructions more clearly defining sampling technique, have been inserted. Methods for calculating the final results, which include detailed instructions for normalization of the test results, have also been included. Finally, the importance of testing and correcting for dispersant interference is emphasized and expanded.

A detailed discussion of the revisions follows.

1. Test Tank: The original schematic of the test tank has been revised to include the critical dimensions of component parts not specifically identified in the original test procedure.

   Additionally, a clamp has been incorporated on the recirculation return line from the pump as recommended by one contractor "so that

the piping system remains rigid." The contractor noted that the slight shift in angle of the return line seemed to alter slightly the circulation of the tank contents from one run to the next.

None of the laboratories indicated any major problem specifically attributable to the test tank. EPA furnished each of the contractors identical test tanks so that problems that would have been expected if each laboratory had fabricated its own test tank were avoided.

2. Hosing System: The original test procedure was extremely vague concerning the pressurized hosing system. No schematic of the apparatus was given, nor were any details of the hosing nozzle and flow rates provided. Since the energy imparted to the oil/dispersant mixture is a function of the pressurized system delivering the water stream, any variation in nozzle characteristics (orifice size, flow rate, pressure) could seriously influence dispersant effectiveness.

   These deficiencies have been corrected by incorporating a sketch of the hosing system along with a detailed specification for the nozzle and its required performance characteristics (pressure/flow rate).

3. Spectrophotometer: The suitability of a Bausch and Lomb (B&L) Spectronic 20 (or equivalent) instrument for determining oil concentration in chloroform extracts of test samples is clearly stated in the revised procedure.

   The original procedure omitted guidelines on suitable wavelength and cell size for spectrophotometrically measuring the concentrations of the test oils. The revised procedure suggests measuring No. 2 Fuel Oil concentrations at 340 mμ in a 1-inch cell and measuring No. 6 Fuel Oil concentrations at 620 mμ in the 0.5-inch cell.

   These general guidelines related to spectrophotometry will be most beneficial for those testing laboratories not equipped for routine spectrophotometric analysis but that are otherwise technically competent to fulfill the test requirements.

4. Dispersant Dispensing Bottle: In the original procedure, using a dispersant dispensing bottle for applying dispersant was purely optional on the part of the laboratory conducting the tests. In the interest of standardization, the revised procedure now makes the utilization of this particular device mandatory.

5. Synthetic Sea Water: The revised formula for synthetic sea water (SSW) includes the addition of potassium chloride (KCl). The new formulation now consists of the six major elements (Cl, Na, Mg, S, Ca, and K) that are present in sea water at concentrations of 1%

or greater. Collectively, these elements constitute 93% of the total elemental composition of sea water.

To minimize the difficulty of SSW preparation and the costs of distillation or purchase associated with the large volumes of water required in the testing procedure, the option of using a source water with a hardness (EDTA) of less than 50 mg/l is now specified. Commercial softeners with sufficient capacity to produce treated water with a hardness significantly less than 50 mg/l are readily available at minimum costs.

Additionally, by inserting a softener ahead of a hot water heater, softened hot water is available to expedite the solution of the salts required to prepare SSW. Use of a softener particularly applies to preparing the concentrated SSW, which is a new option of the revised procedures.

After preparing the concentrated SSW, the proper aliquot of the concentrate can be diluted in the test tank by interconnection of the softened cold and hot water supplies. Most importantly, by inserting valves for adjusting the flow rate of the two water supplies, little difficulty should be encountered in maintaining the precise control of water temperature at 23 $\pm$ 1°C from test to test. The water temperature fluctuations experienced by one laboratory were attributed to the variability in temperature of the distilled water purchased from a supplier.

It is anticipated that the emphasis placed on water temperature requirements, together with the optional suggestions relating to water hardness and concentrated SSW preparation, will aid the testing laboratories in handling the large volumes of water required for testing.

6. Test Oils: Three important considerations in the development of standard test procedures are: economy, simplicity, and reproducibility. Each of these played a key role in the selection of oils for the dispersant effectiveness test.

Crude oils were tested in the original procedures. However, the following problems were encountered: (1) crude oils were difficult to obtain in gallon or single drum quantities. Refineries, terminals, and similar facilities that handle crude oils are not equipped to provide such small volumes; (2) crude oils from the same field vary significantly in chemical and physical properties. Additionally, a refinery may handle a particular crude for a short time period and then switch to another as the supply or demand varies; and (3) there are over 8,000 different crude oils worldwide. How representative of this picture one or two local crudes might be is not known.

For these reasons, the revised dispersant effectiveness test procedures do not specify crude oils.

The principle characteristics of oils that affect the efficiency of dispersants are viscosity, surface tension, and density. From experience and manufacturers' data, some oils are known to be "easy" to disperse and some are "difficult" to disperse. The revised procedure specifies No. 2 Fuel Oil, which is relatively easy to disperse, and No. 6 Fuel Oil, which is relatively difficult to disperse. These oils represent a large percentage of spill incidents and are readily obtainable. Additionally, it is expected that the range of physical characteristics of the test oils will generally reflect the broad range of crude oils having characteristics within the limits of the test oils.

The original test procedure referenced ASTM specifications for No. 2 and No. 6 Fuel Oils. Yet it is known, for example, that the viscosity for No. 6 Fuel Oil, according to ASTM specifications, varies from 900 to 9000 cs and that this variation will greatly influence the resultant dispersion. It is also known that ASTM specifications contain no allowance for the aromatic content of No. 2 Fuel Oil, which varies from 5% to 40% on a weight basis. In addition to a tremendous effect on toxicity, this variation could also influence dispersant effectiveness. With knowledge such as this experience gained at the Edison Water Quality Research Laboratory, and recommendations from the contract laboratories, the decision was made to omit the ASTM specifications and publish more precise specifications on the characteristics of the test oils.

In the revised test procedure, detailed specifications are established for No. 2 and No. 6 Fuel Oils. Because these specifications must be met at the time of testing as well as at the time of purchase, proper preservation, storage, and quality control of the test oils is required.

7. Dispersant Dosages: The three participating laboratories were required to determine the dosages of dispersant causing 25%, 50%, and 75% oil dispersion. This procedure turned out to be extremely time consuming since it required testing by trial and error. Also, for any oil/dispersant combination, the target percent dispersion points (25%, 50% and 75%) were never exactly reached by all three laboratories. Accordingly, this procedure made it extremely difficult to determine common data points from which to compare results among the laboratories.

The revised procedure now requires the preparation of curves that relate dispersant dosage to percent dispersion. A more informative and statistically sound method of measuring percent dispersion at preselected specific volumes of dispersant (10 ml, 25 ml, 50 ml and 100 ml) is now stipulated.

8. Preparing Stock and Standard Solutions of Oil: Suggested procedures for preparation of stock and standard working test oil solutions are outlined in the revised test. Although specifically referenced for application when the B&L Spectronic 20 is used, the format for preparing standard solutions with appropriate volumetric modifications is generally applicable for use with other spectrophotometers. Likewise, the stock solution, prepared as proposed, is applicable for use regardless of which spectrophotometer is employed.

9. Water Temperature: Presently, the degree to which test-water temperature variations influence dispersant effectiveness is not defined; however, test-water temperature is known to directly effect the physical characteristics of both the oil and dispersant. The physical characteristics of the dispersion formed and its subsequent stability are also dependent on water temperature. Therefore, it is critical that the test water temperature be precisely controlled.

   The water temperatures employed at the three laboratories varied: Lab 1, 16.0°C to 28.0°C; Lab 2, 20.0°C to 22.2°C; and Lab 3, 21.0°C to 25.0°C.

   In the analysis of variance, the extent to which test-water temperature differences between the laboratories contributed to the total variance is not known. In the original procedure the intent was to have the effectiveness tested at a water temperature of 23± 2°C. Unfortunately, this water temperature requirement was not specifically nor clearly stated in the documents outlining the test procedure, and two of the three laboratories misinterpreted it. To overcome the possible recurrence of the problem, the revised test procedure incorporates water temperature requirement of 23 ± 1°C in Step 1. To avoid any misinterpretation, the requirement is additionally included in Step 6 that relates to hosing with SSW.

   The required temperature, which approximates room temperature, is considered to be a realistic compromise considering the large volume of water involved in the testing procedure. Most laboratories are expected to have little difficulty in precisely controlling temperatures at this level. Such precise control is highly desirable when considering the potentially large number of laboratories reporting results to EPA.

10. Oil and Dispersant Temperatures: No consideration was given in the original test procedure to the question of controlling the temperatures of the oils and dispersants. The properties of some oils and oil/dispersant mixtures (e.g., viscosity, etc.) change radically with temperature and consequently influence the effectiveness rating of the dispersant under consideration. To eliminate this influence and to increase reproducibility of the test, the revised procedure now provides for maintaining the oil and dispersant at temperatures of 23 ± 1°C.

11. Oil and Dispersant Applications: The technique for applying oil and dispersant in the original procedures lacked sufficient details to assure uniformity of applications from test to test. The revised procedure elaborates the mode of application; details are expanded and precautionary statements are included to avoid certain techniques that could cause loss of oil and dispersant to the underlying water or cylinder walls before completion of the oil/dispersant contact time.

Gravimetric determination of the amounts of oil, as well as dispersant, applied in the testing procedure are now required for subsequent normalization of test results.

The revised procedure should make possible the application of more precise quantities of the required volumes of oils and dispersants to be tested, as well as minimize the degree of normalization required for adjusting test results.

12. Contact Time: The laboratories were required to determine whether the contact time (the period between the addition of dispersant to the oil and the onset of hosing) influenced dispersant effectiveness. For each oil/dispersant combination, the percent dispersion for contact periods of zero (instantaneous) and 10 minutes were measured. Analysis of the data indicated that the effectiveness was independent of contact time. Although the laboratories did not always agree on the "best contact time," the differences in effectiveness found by a given laboratory at zero contact time as compared with 10-minute contact time were not, in most cases, greater than the differences in effectiveness found by the laboratory between replicate runs for the same contact time. Therefore, for the purposes of standardization of the test conditions and for ease of carrying out the test procedure, the test method has been revised to require testing at only a single contact time -- 1.0 minute.

13. Hosing Operation: The original test method required the oil/dispersant mixture in the test tank to be agitated with a pressurized hose stream of SSW. This hosing was to be continued until the water level in the tank increased 2 inches. Because of the turbulence of the tank contents and the foaming and frothing of the oil/dispersant mixtures during hosing, determining when the 2-inch level had been reached and exactly when to terminate hosing, was extremely difficult. Consequently, data from the laboratories indicated that the time of hosing varied from 40 to 90 seconds. Any variation in hosing alters the amount of agitation of the oil/dispersant mixtures, which consequently affects oil dispersion. To eliminate the time and volumetric errors inherent in this hosing operation, the procedure was modified by establishing a volume flow rate for the hosing stream (4.0 ± 0.2 gpm at 20 psig) and then designating a specific hosing period for the operation -- 1.0 minute.

14. Sampling Techniques: The original test required recirculation of the contents of the test tank for a predetermined period at which time a 500 ml sample was immediately taken. One of the contract laboratories indicated that when the valve was opened to remove the sample, water with a high oil content was nearly always detected in the volume collected from the first few seconds of flow. It was stated that the probable reason was that a trap was formed by the short dead-end line leading to the spigot in which the oil concentrated during the recirculation period.

    To eliminate the above effect and ensure a representative sample, the revised procedure now requires purging the recirculated stream by discarding the first 500 ml sample and collecting a subsequent sample for analysis.

15. Sampling Times: The original test required the collection of a sample for initial dispersion after 5 minutes recirculation. It also required sampling for dispersion stability after 15 minutes 30 minutes, and 1, 2, 4, and 6 hours of recirculation. A review of the stability data furnished by the three contract laboratories indicates that the instability of any particular dispersion will normally be manifested within 2 hours; therefore, any testing beyond this time frame should not be necessary. Therefore, for ease and simplicity of testing, the original number of samplings has been reduced to only two, i.e., 10 minutes for "initial dispersion" and 2 hours for "final dispersion.".

16. Dispersant Blank Correction : Although the original test required checking for dispersant interference in the absence of oil and correcting for this interference when appropriate, one laboratory failed to run the blank tests. Another laboratory ran the blank tests but failed to correct results for the two dispersants producing positive and significant interference.

    Two laboratories failed to properly interpret the requirements for blank corrections. To avoid recurrence of this problem, a more detailed explanation of the dispersant blank interference testing and blank correction is outlined in the revised procedure. Also included in the revised procedure is a detailed sequential procedure for calculating test results.

17. Normalization of Results: Significant variations resulted in many cases because the prescribed method failed to require calculating a correction factor for the actual quantities of the oils and dispersants used in the tests. Since it is difficult to deliver exactly the same quantitites of dispersants and oils from test to test, the results generated from each test should be adjusted, by a ratio of preselected quantities of dispersants and oil, for the quantity of dispersant and oil actually used in the particular test. For example, the revised procedure requires testing at 10, 25, 50,

and 100 ml of dispersant with 100 ml oil. Accordingly, the test method now requires adjustment or normalization of the results by multiplying each result by a "dispersant conversion factor"

$$\frac{\text{10, 25, 50, or 100 ml dispersant}}{\text{ml dispersant used}}$$

and by an "oil conversion factor"

$$\frac{\text{100 ml oil}}{\text{ml oil used}}$$

This normalization of the data will reduce the results to a common end point and should tend to improve the accuracy and precision of the test.

SECTION IV
DISCUSSION OF TOXICITY TEST

DISCUSSION OF TOXICITY TEST

Statistical Analysis

The degree of reproducibility of bioassay results obtained from the testing laboratories was a major determinent in assessing the validity of the test procedure and the appropriateness of each species as a test organism. To assess the degree of agreement among laboratory results, the bioassay values from each laboratory were calculated and plotted, with 95% Confidence Limits (Figures 4 and 5.) Overlapping Confidence Limits indicate that the differences are not significant.

The Least Significant Interval test, plus the percent variation information in Table 12, were the basis for evaluating the interim toxicity test procedure designed for each test species.

The *Artemia* bioassay exhibited the greatest "among laboratory" variation with 22% of the total variation attributable to the laboratories. Figure 4 illustrates this large variation: the mean 48-hour TL_{50} for one laboratory is significantly different from the other two laboratories. Close examination of all the data reveals that toxicity values for one particular oil/dispersant combination were considerably different from the results for the other oil/dispersant combinations.

For both fish species, the total variation attributable to laboratories was less than 13%. A situation similar to that of the *Artemia* assay was evident for the *Fundulus* bioassay (Figure 5), however. The mean 96-hour TL_{50} for one laboratory's bioassay results was significantly greater than that for the other two laboratories. In both instances, the same oil/dispersant combination was responsible for the large variation in the reported values. This discontinuity in the data demonstrates the need to blend the test dispersant and oil sufficiently.

Statistical analysis of the bioassays data indicates that less than 22% of the total variation is attributable to differences among laboratories. The variation associated with each laboratory results from differences in such factors as laboratory personnel, preparation of materials, and source of organisms. Discrepancies arising from these factors can, however, be reduced by carefully scrutinizing and upgrading each bioassay procedure. The following discussion presents that qualifications and alterations to the test procedure that should enhance the reproducibility of the tests, lessen the variation attributed to laboratories, and, thereby, lend more credibility to the data.

Comments of Test Revisions

1. Test Oils: The standard test oil, No. 2 Fuel Oil, was chosen for its known relative toxicity, ease of acquisition, and consistency of composition as compared with crude oils and other petroleum products, and the ease of preparation for testing. For example, high

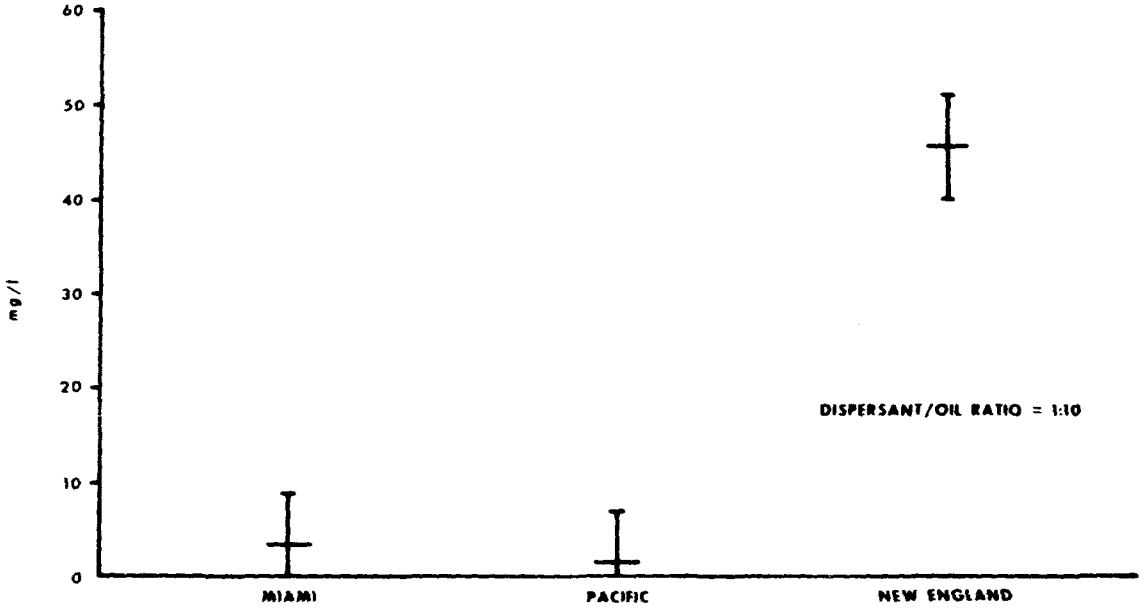

MEAN AND CONFIDENCE LIMITS (95%) OF 48 HOUR TL_{50}
Artemia salina BIOASSAY RESULTS FOR THREE LABORATORIES
Figure 4

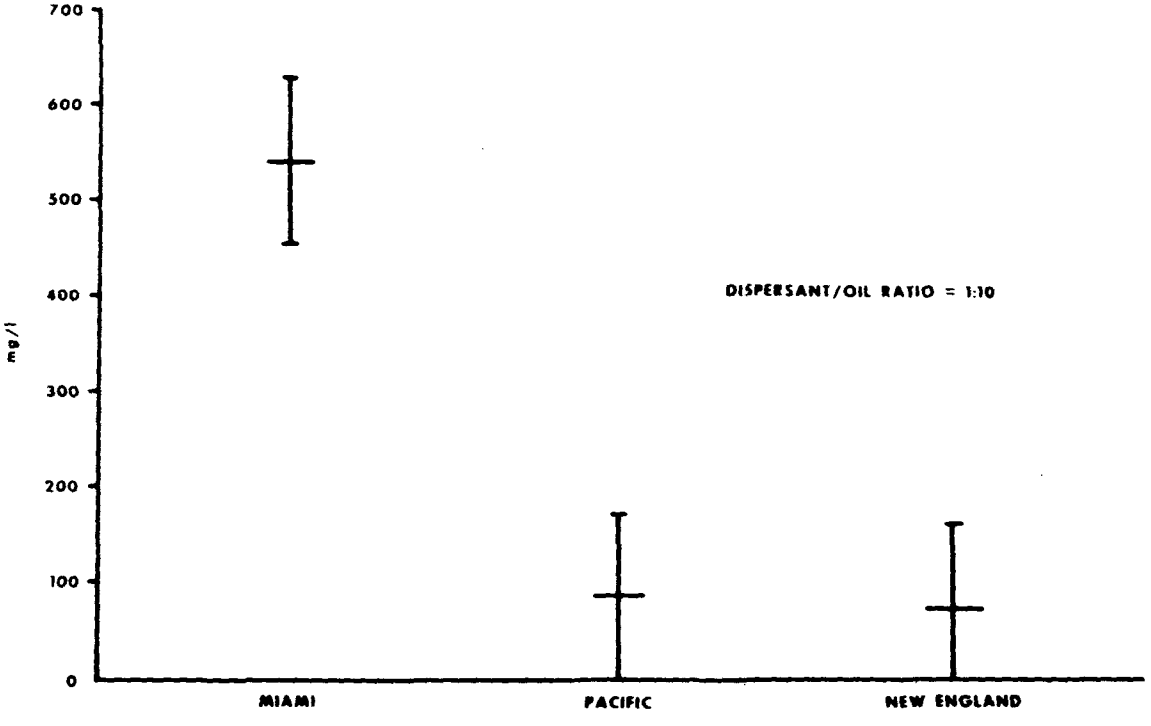

MEAN AND CONFIDENCE LIMITS (95%) OF 96 HOUR TL_{50}
Fundulus heteroclitus BIOASSAY RESULTS FOR THREE LABORATORIES
Figure 5

TABLE 12. SOURCES OF VARIATION AND PERCENT OF TOTAL VARIATION WITHIN 3x4x4 FACTORIAL DESIGN*

Sources	Brine shrimp *Artemia*	Fat-head minnow *Pimephales*	Mummichog *Fundulus*
Laboratories	21.6	7.6	12.8
Oil/dispersant combination (B)	8.1	40.0	13.8
Interaction (AxB)	9.1	4.0	14.1
Dispersants (C)	22.3	24.2	16.0
Interaction (AC)	21.8	5.5	14.4
Interaction (BC)	8.4	14.8	14.9
Residual (ABC)	8.3	3.8	13.7

*Bioassay results from oil/dispersant mixtures combined in a ratio of 1:10.

viscosity oils are difficult to draw into the Teflon-tipped syringes, to measure, and to extrude into the blender vessel.

2. Oyster Larvae Bioassay: The oyster larvae bioassay procedure discussed by Tarzwell (3) was omitted from the standard toxicity test because of the inability of many laboratories to spawn oysters and rear early-stage larvae. At best, oyster culturing is tenuous and the successful laboratories usually specialize only in bivalve rearing. Acquiring sexually mature oysters on a year round basis is a difficult task, and a stock of several mature adults would be necessary to produce enough larvae to run bioassays. Another problem is inducing oysters to spawn. In addition, producing viable, healthy oyster larvae is difficult because of the naturally high mortality of the early stages.

   Because oyster larvae have high commerical value, are ecologically important, and have a known susceptibility to toxicants, they are an ideal species for testing; however, the problems associated with maintaining, spawning, and rearing osyters are too complicated to include their use in the standard dispersant toxicity tests.

REFERENCES

1. Anon. 1971. Oil Spill Dispersant Product Data, EPA, Edison Water Quality Laboratory, Edison, New Jersey.

2. Anon. 1969. Standard Tests for Measuring Oil Dispersant Toxicity and Emulsion Efficiency, Unpublished. U.S. Dept. of Int., FWPCA.

3. Tarzwell, C. M. 1969. Standard Methods for the Determination of Relative Toxicity of Oil Dispersants and Mixtures of Dispersants and Various Oils to Aquatic Organisms. In Proc. Joint Conference on Prevention and Control of Oil Spills, API and FWPCA, December 15 - 17, 1969, New York, pp. 179-186.

4. Murphy, T. A., McCarthy, L. T. 1969. Evaluation of the Effectiveness of Oil Dispersing Chemicals. In Proc. Joint Conference on Prevention and Control of Oil Spills, API and FWPCA, December 15 - 17, 1969, New York, pp. 199-207.

5. Standard Methods for the Examination of Water and Wastewaters, 1969. 12th Edition American Public Health Assoc., New York.

6. National Oil and Hazardous Substances Pollution Contingency Plan, Council on Environmental Quality. August 1971.

SELECTED WATER RESOURCES ABSTRACTS

INPUT TRANSACTION FORM

1. Report No. 2.

W

STANDARD DISPERSANT EFFECTIVENESS AND TOXICITY TESTS,

5. Report Date

6.

8. Performing Organization Report No.

McCarthy, Jr., L.T., Wilder, I., and Dorrler, J. S.

In-House Project

U.S. Environmental Protection Agency
Edison Water Quality Research Laboratory
National Environmental Research Center
Edison, New Jersey 08817

13. Type of Report and Period Covered

12. Sponsoring Organization

Environmental Protection Agency report number EPA-R2-73-201, May 1973

A brief history of the development of the Standard EPA Dispersant Effectiveness and Toxicity tests is outlined. The standard tests are presented and discussed. An analysis of variance is performed on the data developed by three independent laboratories in order to determine the reproducibility of standard test procedures.

In the standard effectiveness test, oil is applied to the water surface in a cylindrical tank. Dispersant is applied in a fine stream and then mixing energy is supplied by a pressurized water stream. The tank contents are recirculated after which samples are withdrawn for extraction and spectrophotometric analysis.

The standard toxicity test involves exposing three species (Pimephales promelas, Fundulus heteroclitus, and Artemia salina) to dispersant and oil/dispersant mixtures. From these tests a curve relating organism survival to material concentrations is developed to determine median tolerance limits.

Separate discussion sections include the statistical analyses of "testing the test" results for reproducibility and the rationale for selecting the test procedures as presented.

17a. Descriptors

*Oil Dispersants, *Standard Tests, *Bioassay, *Toxicity Test, Emulsifiers

17b. Identifiers

Dispersant tests, Dispersant effectiveness tests, Dispersant toxicity test

17c. COWRR Field & Group

19. Security Class. (Report)	21. No. of Pages	Send To:
20. Security Class. (Page)	22. Price	WATER RESOURCES SCIENTIFIC INFORMATION CENTER U.S. DEPARTMENT OF THE INTERIOR WASHINGTON, D.C. 20240

Leo T. McCarthy, Jr. | Edison Water Quality Laboratory, NERC