EPA-600/2-76-015
January 1976

Environmental Protection Technology Series

MOLECULAR SIEVE NO_x CONTROL PROCESS IN NITRIC ACID PLANTS

Industrial Environmental Research Laboratory
Office of Research and Development
U.S. Environmental Protection Agency
Research Triangle Park, North Carolina 27711

RESEARCH REPORTING SERIES

Research reports of the Office of Research and Development, U.S. Environmental Protection Agency, have been grouped into five series. These five broad categories were established to facilitate further development and application of environmental technology. Elimination of traditional grouping was consciously planned to foster technology transfer and a maximum interface in related fields. The five series are:

1. Environmental Health Effects Research
2. Environmental Protection Technology
3. Ecological Research
4. Environmental Monitoring
5. Socioeconomic Environmental Studies

This report has been assigned to the ENVIRONMENTAL PROTECTION TECHNOLOGY series. This series describes research performed to develop and demonstrate instrumentation, equipment, and methodology to repair or prevent environmental degradation from point and non-point sources of pollution. This work provides the new or improved technology required for the control and treatment of pollution sources to meet environmental quality standards.

EPA REVIEW NOTICE

This report has been reviewed by the U.S. Environmental Protection Agency, and approved for publication. Approval does not signify that the contents necessarily reflect the views and policy of the Agency, nor does mention of trade names or commercial products constitute endorsement or recommendation for use.

This document is available to the public through the National Technical Information Service, Springfield, Virginia 22161.

EPA-600/2-76-015

MOLECULAR SIEVE NO_x CONTROL PROCESS IN NITRIC ACID PLANTS

by

Harvey S. Rosenberg

Battelle-Columbus Laboratories
505 King Avenue
Columbus, Ohio 43201

Contract No. 68-02-1323, Task 17
ROAP No. 21ADH-008
Program Element No. 1AB014

EPA Task Officer: E.J. Wooldridge

Industrial Environmental Research Laboratory
Office of Energy, Minerals, and Industry
Research Triangle Park, NC 27711

Prepared for

U.S. ENVIRONMENTAL PROTECTION AGENCY
Office of Research and Development
Washington, DC 20460

January 1976

ABSTRACT

An engineering analysis of the applicability of molecular sieve technology to the control of nitrogen oxide emissions from nitric acid plants has been conducted. Field test data from a commercial plant using this technology show that after 6 months of operations the plant is still controlling the NO_x emissions to well within the New Source Performance Standard for nitric acid plants (1.5 kg of NO_x/metric ton of acid which is equivalent to about 200 ppm NO_x in the tail gas). Field test data from a second commercial plant taken 10 months after start up show that NO_x emissions are below the New Source Performance Standard even though the sieve had been damaged by an accidental backup of nitric acid. The process appears capable of achieving an average effluent NO_x concentration of 50 ppm based on testing at the former plant, but the achievement of the concentration was not demonstrated at the latter plant during the performance test because of the prior acid damage to the sieve. The 2-year sieve life has not yet been demonstrated, although there is no reason to believe it cannot be achieved. Thus, it appears that molecular sieve technology is technically feasible.

The economic feasibility of molecular sieve technology for this application was assessed by comparing the total capitalized cost (including investment and operating cost) of this technology with those of the catalytic reduction and extended absorption processes. It should be noted that molecular sieve technology is potentially able to limit the effluent NO_x concentration to 50 ppm, whereas catalytic reduction and extended absorption usually limit the effluent NO_x concentration to only 200 ppm. The capitalized cost for the molecular sieve process is higher than for the catalytic reduction process and lower than for the extended absorption process. However, considering the shortage of natural gas required for catalytic reduction, molecular sieve technology is probably economically feasible for most acid plants. Molecular sieve technology becomes economically competitive with catalytic reduction when the price of natural gas reaches \$2.4/1000 ft^3.

TABLE OF CONTENTS

	Page
INTRODUCTION	1
NITRIC ACID MANUFACTURE, AIR EMISSIONS, AND CONTROL ALTERNATIVES	2
Nitric Acid Manufacture	3
Sources of Atmospheric Emissions	6
Emissions Control Technology	7
Catalytic Reduction	7
Extended Absorption	11
Wet Scrubbing	11
Adsorption	15
Flaring	17
TECHNICAL EVALUATION OF MOLECULAR SIEVE CONTROL TECHNOLOGY	18
General Description of Molecular Sieves	18
Use of Molecular Sieves for NO_x Recovery	18
Description of PuraSiv N Process	20
Performance of the PuraSiv N Process	28
Tests by Union Carbide Corporation	28
Tests by U.S. Army	32
Tests by Engineering-Science, Inc.	37
Sieve Life	41
ECONOMIC EVALUATION OF MOLECULAR SIEVE CONTROL TECHNOLOGY	42
Basis and Procedures	42
Investments	42
Operating and Maintenance Costs	43
Capitalized Costs	45
Investment and Operating Costs	46
Molecular Sieve Adsorption	46
Catalytic Reduction	46
Extended Absorption	48
Cost Equations	48
Capitalized Costs	52
CONCLUSIONS AND RECOMMENDATIONS	54
REFERENCES	56
APPENDIX A	
DETAILED COST DATA	A-1

LIST OF TABLES

		Page
Table 1.	Generalized Material Balance for 2-Bed PuraSiv N Process Applied to 100 Ton/Day Nitric Acid Plant	25
Table 2.	Generalized Material Balance for 4-Bed PuraSiv N Process Applied to 300 Ton/Day Nitric Acid Plant	29
Table 3.	Design Basis for Hercules and Holston PuraSiv N Units	30
Table 4.	Performance of Hercules PuraSiv N Unit During Three Day Performance Run After Start Up	31
Table 5.	Performance of U.S. Army - Holston PuraSiv N Unit During Three Day Performance Run After Start Up	31
Table 6.	Three Day Performance Tests of the Holston PuraSiv N Unit By the U.S. Army	34
Table 7.	Performance Tests of the Hercules PuraSiv N Unit by Engineering-Science	38
Table 8.	Unit Costs Used in Calculating Operating and Maintenace Costs	44
Table 9.	Costs of PuraSiv N Process (8000 hr/yr operating time)	47
Table 10.	Costs of Catalytic Reduction Process (8000 hr/yr operating time)	49
Table 11.	Costs of Extended Absorption Process (8000 hr/yr operating time)	50
Table 12.	Equations for Investment and Operating Costs for NO_x Emission Control Processes at Existing Nitric Acid Plants	51

LIST OF FIGURES

Figure 1.	Flow Diagram of a Typical 120-Ton-Per-Day Nitric Acid Plant Utilizing the Pressure Process	5
Figure 2.	Typical Nitric Acid Plant Tail Gas Catalytic Reduction Unit Utilizing Natural Gas	9
Figure 3.	Extended Absorption System on Existing Nitric Acid Plant	12

LIST OF FIGURES
(Continued)

		Page
Figure 4.	Caustic Scrubbing for NO_x Control at Canadian Chemical Plant.	14
Figure 5.	Simplified Flow Diagram for Molecular Sieve Adsorption of NO_x From Nitric Acid Plant Tail Gas	16
Figure 6.	Two-Bed PuraSiv N Process (Vessel A Under Adsorption and Vessel B Under Regeneration Heating)	21
Figure 7.	Four-Bed PuraSiv N Process (Vessels A and B Under Adsorption, Vessel C Under Regeneration Cooling, and Vessel D Under Regeneration Heating)	26
Figure 8.	Performance of Hercules Adsorption Beds After About 40 Cycles.	33
Figure 9.	Inlet NO_x Concentration to Adsorption Beds as a Function of Temperature	36
Figure 10.	Total NO_x Mass Loading Vs. Average NO_x Removal	40
Figure 11.	Capitalized Costs for NO_x Emission Control at Nitric Acid Plants.	53

TOPICAL REPORT

on

ENGINEERING ANALYSIS OF THE PURASIV N CONTROL PROCESS IN NITRIC ACID PLANTS

to

INDUSTRIAL ENVIRONMENTAL RESEARCH LABORATORY
OFFICE OF RESEARCH AND DEVELOPMENT
ENVIRONMENTAL PROTECTION AGENCY
RESEARCH TRIANGLE PARK, NORTH CAROLINA

by

Harvey S. Rosenberg

Task 17, Contract No. 68-02-1323

INTRODUCTION

The main source of atmospheric emissions from the manufacture of nitric acid is the tail gas from the absorption tower which contains unabsorbed oxides or nitrogen. These oxides are largely in the form of nitric oxide (NO) and nitrogen dioxide (NO_2). NO_2 is a red-brown acidic gas with a pungent odor; NO is colorless and odorless but is oxidized by the oxygen in air to NO_2. The toxic effects of NO_2 are well documented in the literature. Several control technologies are available to reduce the nitrogen oxide emissions from nitric acid plants to 1.5 kg per metric ton of acid (the standard for new plants). Among these is adsorption of the nitrogen oxides on a unique molecular sieve developed by Union Carbide Corporation especially for this purpose. The NO_x removed is recycled back to the absorption tower as NO_2 for additional acid production. The developer and vendor of the molecular sieve process claims that the NO_x emissions can be reduced to a guaranteed average level of less than 50 ppmv. The molecular sieve is guaranteed to have a life of 2 years.

The study described in this report was undertaken for the U. S. EPA in order to evaluate the technical and economic feasibility of molecular sieve control systems for nitric acid plant tail gas. The objective of this study was to determine (1) the technical feasibility of the control system on the basis of the analysis of data independently obtained from testing of a molecular sieve adsorption system currently in operation and from analysis of information made available by the system vendor and (2) the economic feasibility of the system by comparison with other commercially available control processes.

NITRIC ACID MANUFACTURE, AIR EMISSIONS, AND CONTROL ALTERNATIVES

Nitric acid is used in the manufacture of ammonium nitrate and in numerous other chemical processes. Ammonium nitrate, which is used as both a fertilizer and in explosives, accounts for about 80 percent of the nitric acid consumption. Nitric acid is produced by oxidation of ammonia followed by absorption of the reaction products in dilute acid solution. Most nitric acid plants in the United States are designed to manufacture acid with a concentration of 55 to 65 percent, which may subsequently be dehydrated to produce 99 percent acid.

At the beginning of 1974, 46 companies privately owned and operated 76 nitric acid plants in the contiguous 48 states, in addition to seven plants operated for the U.S. government by five companies. Nearly all nitric acid produced in the United States is for captive consumption. Capacities of U.S. plants range from 40 to 1160 metric tons per day. Privately owned nitric acid plants are located in 30 states with Texas, Louisiana, Missouri, and Kansas leading in production capacity.

The reported U.S. capacity for production of nitric acid was 8.4 million metric tons per year at the beginning of 1974, exclusive of production for the U.S. government. Production from these privately owned plants is expected to be about 6.6 million metric tons in 1974, 6.9 million in 1976,

and 7.1 million in 1980. Production is currently proceeding at about 78.5 percent of capacity.

Nitric Acid Manufacture

The essential raw materials for the modern manufacture of nitric acid are anhydrous ammonia, air, water, and platinum-rhodium gauze as catalyst. The essential reactions for the production of nitric acid by the oxidation of ammonia may be represented as follows:

$$4NH_3(g) + 5O_2(g) \longrightarrow 4NO(g) + 6H_2O(g) \quad \Delta H_{298} = -216.6 \text{ kcal} \tag{1}$$

$$2NO(g) + O_2(g) \longrightarrow 2NO_2(g) \quad \Delta H_{298} = -27.1 \text{ kcal} \tag{2}$$

$$3NO_2(g) + H_2O(l) \longrightarrow 2HNO_3^{(aq)} + NO(g) \quad \Delta H_{298} = -32.2 \text{ kcal} \tag{3}$$

Several side reactions reduce somewhat the yield of reaction (1):

$$NH_3(g) + O_2(g) \longrightarrow 1/2N_2O(g) + 3/2H_2O(g) \quad \Delta H = -65.9 \text{ kcal} \tag{4}$$

$$4NH_3(g) + 3O_2(g) \longrightarrow 2N_2(g) + 6H_2O(g) \quad \Delta H_{298} = -302.7 \text{ kcal} \tag{5}$$

$$4NH_3(g) + 6NO(g) \longrightarrow 5N_2(g) + 6H_2O(g) \quad \Delta H_{298} = -302.7 \text{ kcal} \tag{6}$$

$$2NO_2(g) \longrightarrow N_2O_4 \quad \Delta H = -13.9 \text{ kcal} \tag{7}$$

Equation (3) is really an absorption phenomenon and is probably the controlling step in making nitric acid. The rate of reaction (3) can be increased by employing an absorption tower under pressure and cooling and by using countercurrent absorption with graded strengths of acid. Secondary air must be supplied to the absorption tower to provide for the reoxidation of NO formed and to desorb (bleach) the dissolved nitrogen oxides which would color the acid. In the "pressure" process which is used for over 90 percent of the nitric acid manufacture in the United States,[1] both the oxidation of ammonia and the absorption of the resulting nitrogen oxides are carried out at about 80 to 120 psig. High pressure oxidation has the advantage of larger space velocity at the expense of shorter catalyst life. Also, pressure oxidation results in a higher-strength product acid.

A typical arrangement of the pressure process for a 120 ton/day nitric acid plant, with data on temperatures, pressures, flows, and compositions, is shown in Figure 1. In this example, oxidation of the ammonia to nitric oxide is accomplished by passing a preheated mixture of 90 percent air and 10 percent ammonia, by volume, through a catalytic converter at a pressure of 112 psig and a temperature of 1,650 F. The catalyst consists of layers of fine wire gauzes, usually 80-mesh, made with 0.003-inch-diameter wire composed of approximately 90 percent platinum and 10 percent rhodium. Contact time with the catalyst is about 1 millisecond, and conversion of the ammonia to nitric oxide and water is about 95 percent complete at these conditions. The remaining 5 percent is lost through dissociation and side reactions. The resulting nitric oxide, oxygen, nitrogen, and water vapor is passed through various arrangements of heat exchangers. A filter at the exit of the heat exchanger train recovers catalyst dust.

Oxidation of nitric oxide to nitrogen dioxide is a continuing process once the gas leaves the converter; however, oxidation is favored by low temperatures, and no significant formation of nitrogen dioxide occurs until the gas enters the cooler condenser. As the gas becomes cooled, water condenses and reacts with the newly formed nitrogen dioxide to produce a weak nitric acid. Cooler condensers are usually designed with sufficient surface and volume to allow for both cooling of the gas and oxidation of nearly all nitric oxide to nitrogen dioxide.

The gas stream leaving the cooler condenser is passed through a cyclone separator before entering the base of the absorber. The separated condensate, which is 40 to 50 percent nitric acid, enters the column at an intermediate point. The absorber contains bubble cap plates to provide intimate countercurrent contact between the aqueous solution and the rising gas stream. Because the absorption of nitrogen dioxide in this solution and its reaction with water to form nitric acid are highly exothermic processes, the tower is provided with internal cooling coils to remove the heat of reaction. Water is fed to the top of the column for absorption, and the secondary air enters the bottom of the column to provide oxygen for the conversion of nitric oxide to nitrogen dioxide in the absorber.

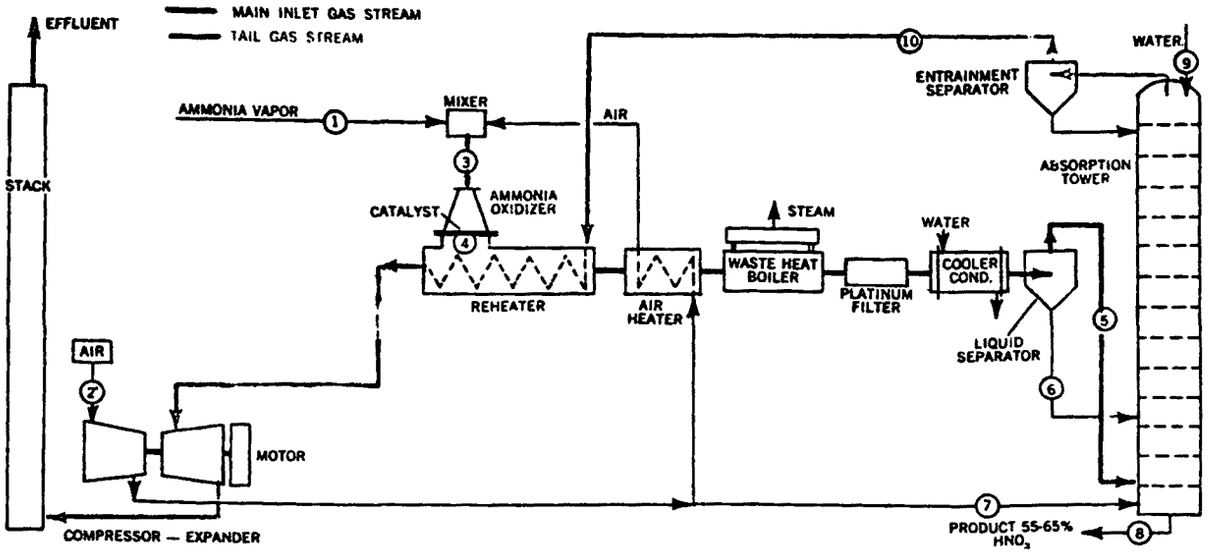

	1	2	3	4	5	6	7	8	9	10
	AMMONIA	AIR	MIX	CONVERTER PRODUCTS	COOLED GAS	CONDENSATE ACID	SECONDARY AIR	NITRIC ACID PRODUCT	WATER	TAIL GAS
FLOW, lb/hr	2,900	51,600	47,050	47,050	38,350	8,700	7,450	16,650	3,350	41,200
TEMPERATURE, °F	170	60	450	1,650	105	105	450	135	100	65
PRESSURE, psig	170	0	112	112	98	98	120	95	125	92
NH_3, Vol %	100	—	100	0	0	—	—	—	—	—
NO, Vol %	—	—	—	9.3	1.1	—	—	—	—	0.10
NO_2, Vol %	—	—	—	0	6.4	1.2	—	—	—	0.15
O_2, Vol %	—	20.8	18.7	6.3	—	—	20.8	—	—	3.0
H_2O, Vol %	—	0.9	0.8	15.4	0.9	—	0.9	—	—	0.6
HNO_3, Wt %	—	—	—	—	—	40-50	—	60	—	—
H_2O, Wt %	0.05	—	—	—	—	50-60	—	40	100	—
N_2, Vol %	—	78.3	17.5	69.0	91.6	—	78.3	—	—	96.15
CO_2, Vol %	—					—		—	—	

FIGURE 1. FLOW DIAGRAM OF A TYPICAL 120-TON-PER-DAY NITRIC ACID PLANT UTILIZING THE PRESSURE PROCESS

Source: Reference 2.

Unabsorbed gas, principally nitrogen, leaves the absorption tower at a temperature of about 85 F and is passed through an entrainment separator. The tail gas is then heated by heat exchange with the hot process gases. The energy contained in the resultant hot gas is recovered in a centrifugal expander, which drives the air compressor. The gas leaving the expander is then discharged to the atmosphere.

Sources of Atmospheric Emissions

Atmospheric emissions from the manufacture of nitric acid occur from the release of unabsorbed oxides of nitrogen in the tail gases from the absorption tower. These oxides are largely in the form of nitric oxide and nitrogen dioxide. The intensity of the reddish-brown color of the gas depends on the concentration of nitrogen dioxide present. The tail gas contains from 0.08 to 0.30 percent total nitrogen oxides, 2 to 3 percent oxygen, and the balance water and nitrogen. About 50 pounds of nitrogen oxides are discharged to the atmosphere for each ton of nitric acid (100 percent basis) made. Small quantities of acid mist usually are also present in the gases from the absorption tower. This mist is vaporized when the gas is reheated and usually enters the atmosphere as a gas. The quantity of acid vapor discharged is relatively insignificant.

Emissions of nitrogen oxides may vary widely with plant operation and with equipment. A survey of 12 nitric acid plants without tail gas control equipment showed emission rates ranging from 17 to 111 pounds of nitrogen oxides per ton of nitric acid.[2] The main plant-operating variables that affect tail gas concentrations adversely are insufficient air supply to the system, low pressure in the system especially in the absorber, high temperatures in the cooler-condenser and absorber, the production of an excessively high strength product acid, and operation at high throughput rates. Faulty equipment includes such items as improperly operating compressors and pumps, and heat exchangers in which leaks between rich and lean nitrogen oxide gas streams may occur.

Insufficient air supply may be due to poor compressor design, malfunctioning of the compressor and power recovery equipment, or leaks in the air supply system. Oxygen is usually supplied to the system by the air compressor, which provides air for the oxidation of ammonia and also

for the reaction to form nitric acid in the absorption tower. Lack of oxygen in the system will hinder the oxidation of nitric oxide to nitrogen dioxide and thus decrease absorption efficiency.

Recent plant design improvements include injecting a portion of the air into the cooler-condenser to increase oxidation of nitrogen oxides at this point. Tower volume and number of plates have an important bearing on plant efficiency.

Pressure in the absorber is fixed by basic design of the unit, by compressor capacity, and by the pressure drop in the lines leading to the absorber. The rate of oxidation of nitric oxide to nitrogen dioxide increases as the square of the pressure, and a small increase in absorber pressure provides a substantial increase in oxidation and absorption rates.

High temperatures also cause a decrease in absorption efficiency. The rate of oxidation of nitric oxide and the rate of absorption of nitrogen dioxide in water vary inversely with the temperature and are favored by low temperatures. Absorber temperature is largely a function of entering gas temperature, ambient air temperature, and temperature and flow of the cooling water that is circulated through coils on each plate. Throughput of the cooling water is dictated by pump design, and its temperature is fixed by the source of the water supply.

Emissions Control Technology

A number of methods are presently available for reducing nitrogen oxide emissions from nitric acid plants. These methods include catalytic reduction with certain fuels, extended absorption, wet scrubbing, adsorption, and flaring. Catalytic reduction is by far the most widely used method of abatement. About 35 nitric acid plants employ catalytic reduction for tail gas treatment, but about 25 of these plants practice decolorization rather than full abatement. About 5 plants employ other types of abatement methods.

Catalytic Reduction

Several types of catalytic reduction units have been used with varying degrees of success. All employ fuel to reduce nitrogen oxides, converting NO_2 to NO and NO to nitrogen. Nonselective reduction uses

hydrogen, hydrocarbons, or carbon monoxide as fuel, which reacts with oxygen in the tail gas, as well as with nitrogen oxides. In selective reduction, ammonia reacts with NO_x in preference to oxygen. In all catalytic reductions, catalyst activity decreases somewhat with use.

Nonselective catalytic reduction is particularly suited to the pressure process for the manufacture of nitric acid in which the absorption tower tail gas is of uniform composition and flow, is under pressure, and can be reheated by heat exchange to the necessary reduction system inlet temperature. Removal efficiencies above 90 percent* are possible, and in addition an economic return may be realized through recovery of heat generated in the catalytic reduction unit if a use for steam is available.

In operation, the tail gases from the absorber are heated to the necessary ignition temperature, mixed with a fuel such as natural gas, and passed into the reactor and through the catalyst. There a number of reactions take place resulting in the dissociation and decomposition of nitrogen oxides:

$$CH_4 + 2O_2 \longrightarrow CO_2 + 2H_2O \tag{8}$$

$$CH_4 + 4NO_2 \longrightarrow 4NO + CO_2 + 2H_2O \tag{9}$$

$$CH_4 + 4NO \longrightarrow 2N_2 + CO_2 + 2H_2O \quad . \tag{10}$$

Reactions (8) and (9) proceed rapidly, with the evolution of considerable heat. Since the NO_2 is converted to NO in reaction (9), the gas is now colorless even though there is yet no substantial destruction of NO. The reaction of further amounts of natural gas with the NO in accordance with reaction (10), which takes place more slowly, results in the reduction of NO to nitrogen. The efficiency of abatement is directly proportional to the degree of completion of reaction (10).

A typical catalytic reduction unit is shown in Figure 2. Temperature and compositions are shown only for illustrative purposes, since in practice actual operating conditions are governed by the kind of fuel employed, the gas composition, and the type of catalyst. Usually the catalyst consists of 0.5 percent platinum or palladium on a support such as woven Nichrome ribbon or ceramic material having a pelleted or honeycomb structure.

---

* Reduction from an inlet NO_x concentration of 2500 ppm to an effluent concentration of 200 ppm.

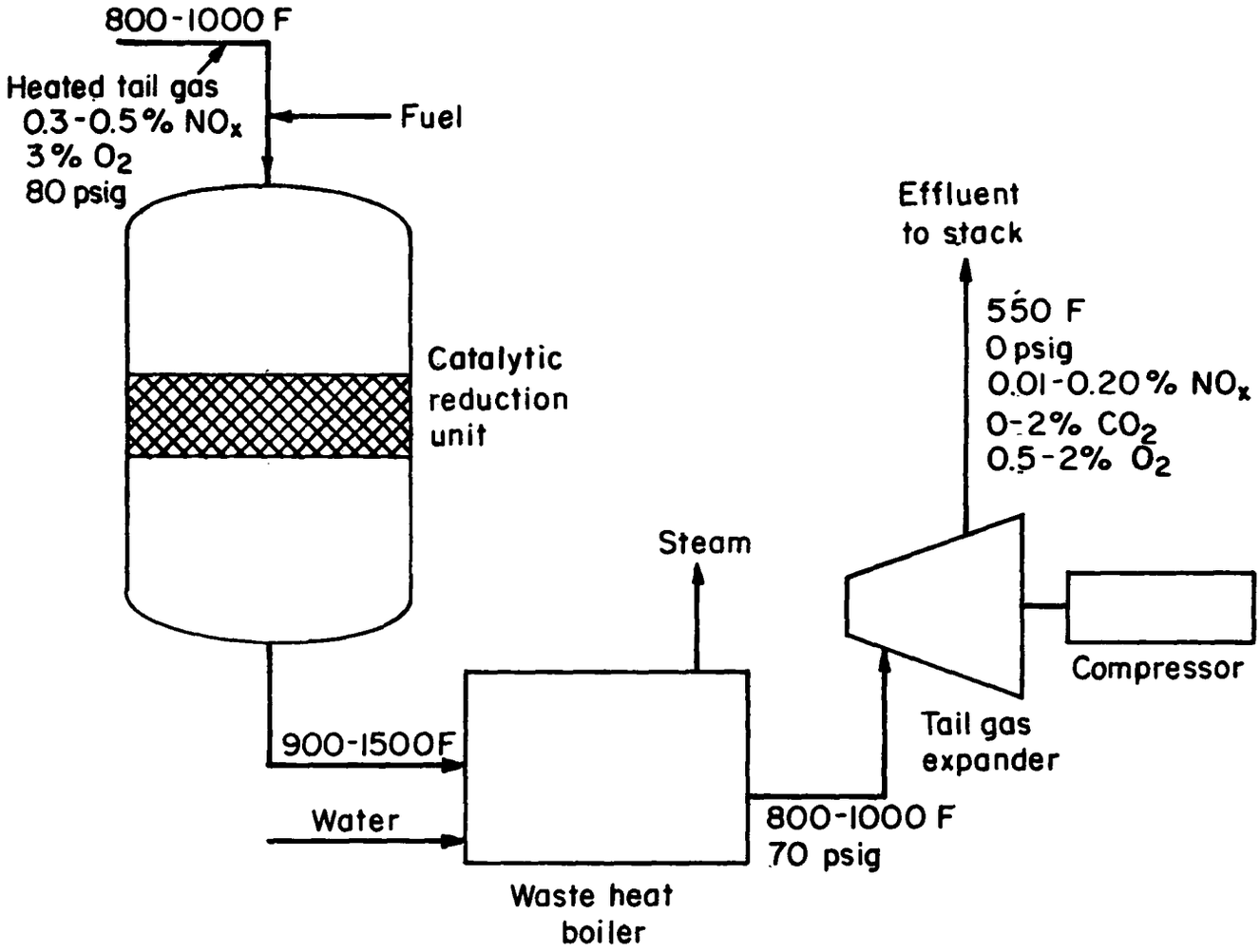

FIGURE 2. TYPICAL NITRIC ACID PLANT TAIL GAS CATALYTIC REDUCTION UNIT UTILIZING NATURAL GAS

Source: Reference 2.

In a single-stage reduction unit, increasing the amount of fuel raises the temperature of the gas as reactions (8) and (9) take place. Generally, the upper temperature limit of the catalyst and reactor vessel of about 1500 F is reached before all of the oxygen has reacted with the fuel. This is especially true when natural gas is used, since a higher inlet temperature is then required. Under these conditions, the effluent is usually a colorless gas in which nitrogen oxides are largely present as NO.

When hydrogen or carbon monoxide is used as the reducing fuel, the inlet temperature may be as low as 285 F, where as with methane the minimum ignition temperature is about 800 F. Thus, a greater amount of oxygen may be removed in a single stage when hydrogen is used, and the subsequent reduction of NO to nitrogen may then take place according to reaction (10) before the limiting temperature of 1500 F is reached.

In most instances natural gas is the most economical fuel. Where temperature limits the extent of reaction in a single-stage reduction unit, it may be necessary to treat the gas in two catalytic reactor stages, with intermediate cooling. By this method, operation can be carried out with excess fuel and the reduction of total nitrogen oxides to less than 100 ppm obtained.

Selective catalytic reduction must be carried out within the narrow temperature range of 410 to 520 F. Within these limits, ammonia will reduce NO_2 and NO to nitrogen, without simultaneously reacting with oxygen. As a result, temperature rise in the catalytic reactor is very small. A ceramic supported (either pellets or honeycomb) platinum catalyst is used. The reactions are

$$8NH_3 + 6NO_2 \longrightarrow 7N_2 + 12H_2O \qquad (11)$$

$$4NH_3 + 6NO \longrightarrow 5N_2 + 6H_2O \quad . \qquad (12)$$

Below 410 F there is a chance that ammonium nitrate will be formed. Above 520 F, oxides of nitrogen are formed by ammonia oxidation.

A number of older nitric acid plants are equipped with reciprocating compressors for power recovery. If selective catalytic reduction units were installed ahead of their expanders, ammonium salts could enter the lubricating oil system, and an explosion could result. This is not a problem with turboexpanders.

Extended Absorption

In theory, emissions from nitric acid plants can be reduced to meet regulations by means of more efficient absorption of the NO_x used in acid production. Societe Chimique de la Grande Paroisse of Paris, France, has designed and engineered nitric acid plants utilizing extended absorption technology for many years. Basically, the extended absorption system forms part of a complete nitric acid process operating at dual pressure (medium-pressure ammonia burner, high-pressure absorption), but since most nitric acid plants in the U.S. operate under high pressure, the extended absorption system lends itself to addition to existing plants.

The first NO_x abatement facility to meet the 200 ppm limit (1.5 kg NO_x as NO_2 per metric ton of 100 percent acid) utilizing the extended absorption technique as an addition to an existing plant came on-stream in the U.S. in late 1973.[3] A simplified flow diagram of the plant after addition of the extended absorption system is shown in Figure 3. The system consists essentially of an additional absorption tower which reduces the NO_x concentration from 2,000 ppm to 180 ppm. In effect, no additional operating costs are encountered through use of the process. The largest operating requirement is the additional electric power required to overcome the pressure drop imposed by the new tower, but the cost of this and other additional operating requirements is largely offset by the increased production capacity of the plant.

Wet Scrubbing

NO_2 can be absorbed by reaction with a large number of liquids, including water, hydroxide and carbonate solutions, solutions of complex-forming salts, organic liquids, and molten alkali carbonates and hydroxides to form nitrates and/or nitrites in most cases. On the other hand, NO is a relatively inert gas that reacts with few of the above liquids. However, N_2O_3, which is in equilibrium with NO and NO_2 in aqueous solution according to the following equation, is more reactive than NO_2.

$$NO + NO_2 \rightleftharpoons N_2O_3 \qquad (13)$$

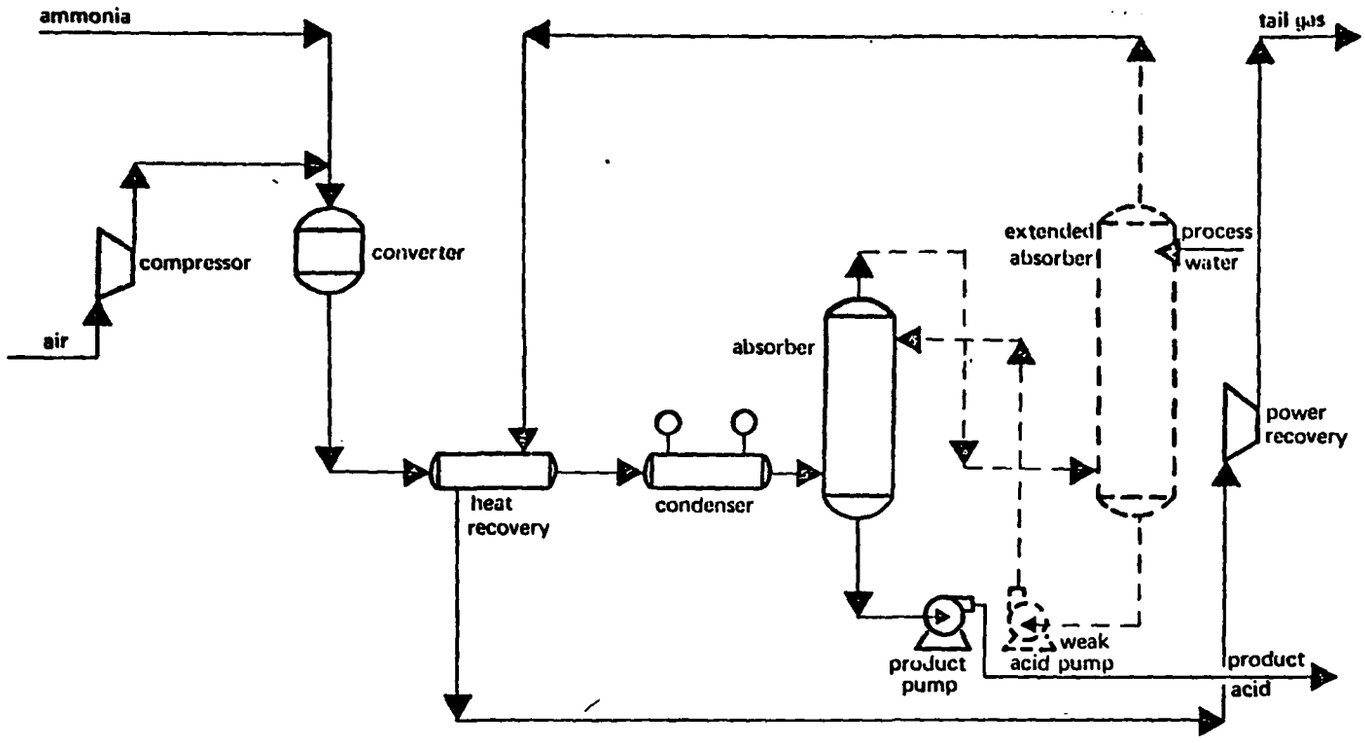

Extended Absorber Performance (360 ton/day plant)

NO_x inlet tower	2,000	ppm
NO_x exit tower	180	ppm
Tower pressure drop	4.5	psi
Cooling water	150	gpm (7 F ΔT)
Electric power	108	kW*
Catalyst	0	
Fuel (additional)	0	
Maintenance (additional)	0	
Process water (additional)	0	
Operations man hours (additional)	0	
Additional production	6.1	tons/day

* 88 kW required to offset 4.5 psi pressure drop.

FIGURE 3. EXTENDED ABSORPTION SYSTEM ON EXISTING NITRIC ACID PLANT

Sherwood and Pigford[4] showed that at an NO_x concentration of 1 percent, a gas containing equal molar quantities of NO and NO_2 was absorbed by a 46 percent NaOH solution as much as ten times faster than NO_2 alone. They found that the rate of absorption of NO + NO_2 was approximately proportional to the first power of the N_2O_3 concentration--indicating the latter to be the reacting specie.

Tail gas from nitric acid plants usually contains an excess of NO_2 over NO, but the molar ratio is much closer to 1 than for stack gas. In caustic scrubbing, NO_x in tail gas reacts with sodium hydroxide, sodium carbonate, or ammonium hydroxide to form nitrite and nitrate salts according to the following typical reactions:

$$2NaOH + 3NO_2 \longrightarrow 2NaNO_3 + NO + H_2O \qquad (14)$$

$$2NaOH + NO + NO_2 \longrightarrow 2NaNO_2 + H_2O \quad . \qquad (15)$$

Unless the nitrites and nitrates resulting from the absorption of NO_x are treated further, the potential for water pollution by these highly soluble salts is considerable.

A caustic scrubbing system was put into operation at a chemical plant in Canada[5] to treat vent gases containing NO and NO_2 and coming from three sources: (1) tail gas from a nitric acid plant, (2) reaction off-gases, and (3) vent gases from tanks and process equipment. The system treated from 4,000 to 7,000 cfm of gas containing from 5,200 to 19,400 ppm NO_x. The molar ratio of NO to NO_2 was about 0.5. The liquor system was designed for batch operation, starting with 3.5 to 4 percent caustic solution which would be essentially exhausted before the spent liquor was sent to the sewer and replaced with fresh liquor. The scrubbing system is shown in Figure 4. The absorber was 8 ft in diameter and contained 41.5 ft of 2-in. random packed porcelain Raschig rings. The NO_x removal efficiency ranged from 65 to 70 percent. The purge stream dumped to the sewer contained 5.4 wt percent $NaNO_2$ and 1.5 wt percent $NaNO_3$ in a 2,570 gal batch which was dumped about every 10 hours.

Nitric acid plant tail gas also can be scrubbed with aqueous urea solutions. The use of urea to remove NO_x is interesting because of the radically different chemical approach taken to the problem. The mechanism of the urea scrubbing involves dissolution of the NO_x in slightly acidic

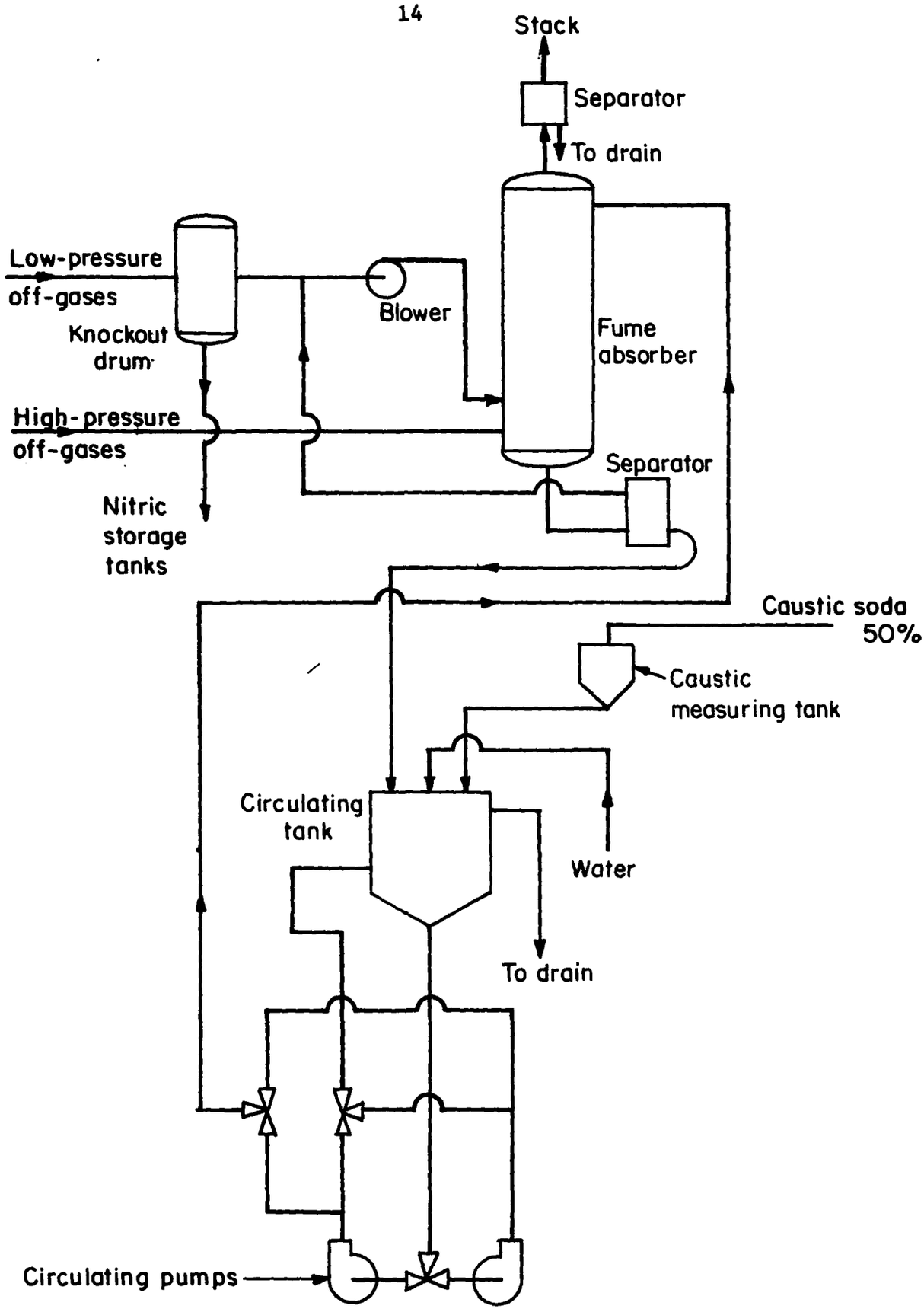

FIGURE 4. CAUSTIC SCRUBBING FOR NO_x CONTROL AT CANADIAN CHEMICAL PLANT

aqueous urea solution to form nitrous acid which reacts with the urea to form nitrogen, carbon dioxide, and water. Some ammonium nitrate is also formed in the process and this must be used as fertilizer.

The following mechanism has been proposed[6] for the reaction of nitrous acid with urea in an acidic solution:

$$HNO_2 + CO(NH_2)_2 \longrightarrow N_2 + HNCO + 2H_2O \quad (16)$$

$$HNCO + HNO_2 \longrightarrow N_2 + CO_2 + H_2O \quad (17)$$

$$HNCO + H_2O + H^+ \longrightarrow NH_4^+ + CO \quad . \quad (18)$$

Laboratory studies[7] revealed that where the concentration of nitrous acid is low, reaction (18) predominates over reaction (17), so that the overall reaction, with nitric acid as the acidic species, is as follows:

$$HNO_2 + CO(NH_2)_2 + HNO_3 \longrightarrow N_2 + CO_2 + NH_4NO_3 + H_2O \quad . \quad (19)$$

Adsorption

Molecular sieves can selectively adsorb NO_x from nitric acid plant tail gas. NO_x removal is accomplished in a fixed bed adsorption/catalyst system, providing recovery and recycle of the nitrogen oxides back to the nitric acid plant absorption tower. A very simplified flow diagram is shown in Figure 5. The water saturated nitric acid plant absorption tower overhead stream is chilled to 45-50 F, the exact temperature level being a function of the NO_x concentration in the tail gas stream, and passed through a mist eliminator to remove entrained water and acid mist. The condensed water, which absorbs some of the NO_2 in the tail gas to form a weak acid, is collected in the mist eliminator and either recycled to the absorption tower or sent to storage. The tail gas then passes through a molecular sieve bed where the special properties of the NO_x removal grade molecular sieve result in the catalytic conversion of nitric oxide (NO) to nitrogen dioxide (NO_2). This occurs in the presence of the low concentrations of oxygen typically present in the tail gas stream. Nitrogen dioxide is then selectively adsorbed. The molecular sieve adsorbent/catalyst provides the most effective performance and longest life when the tail gas is bone dry.

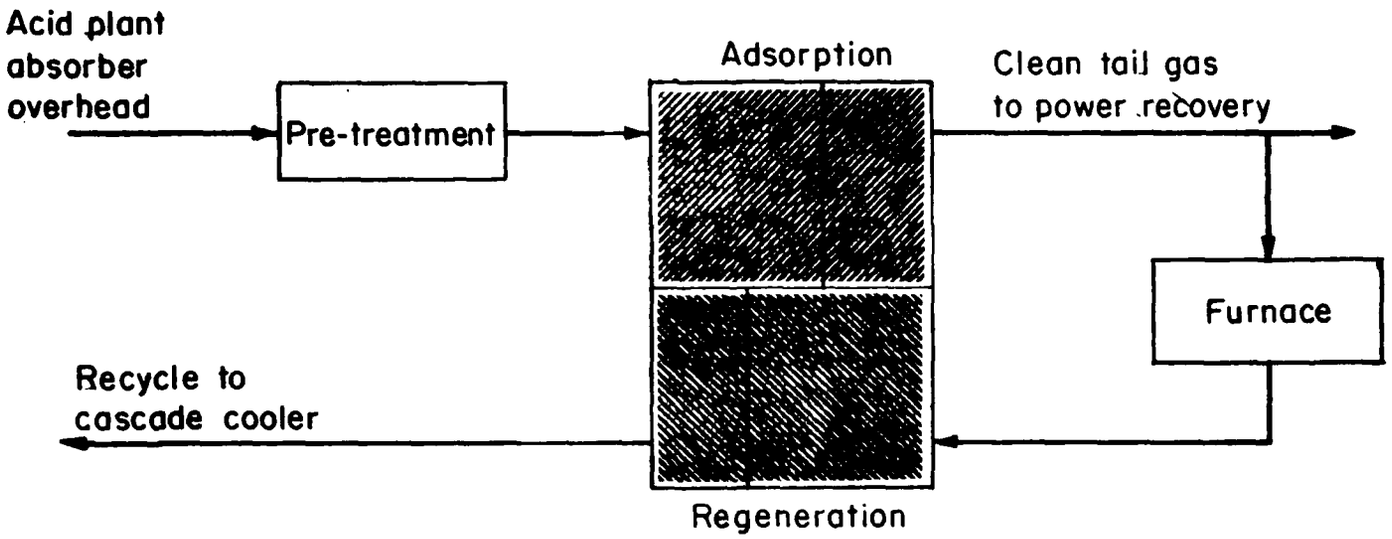

FIGURE 5. SIMPLIFIED FLOW DIAGRAM FOR MOLECULAR SIEVE ADSORPTION OF NO_x FROM NITRIC ACID PLANT TAIL GAS

This is accomplished by drying with a desiccant which exhibits very little coadsorption of NO_x during water removal. The desiccant is located in the same adsorber vessel as the NO_x adsorbent/catalyst in a compound bed arrangement.

Regeneration is accomplished by thermal swinging the adsorbent/catalyst bed after it completes its adsorption step and contains a high adsorption loading of NO_2. The required regeneration gas is obtained by using a portion of the treated tail gas stream to desorb the adsorbed NO_2 from the bed for recycle back to the nitric acid plant absorption tower. This requires that the nitric acid plant absorption tower be able to accommodate the recycle regeneration stream.

Flaring

Passing the gases that contain nitrogen oxides through a combustion chamber or flame usually will reduce the nitrogen oxides to nitric oxide and thereby provides a colorless emission. The extent of nitrogen oxides destruction to nitrogen is influenced by the kind of burner or flare, the type of fuel, and the initial concentration of NO_x in the waste gas. The performance to be realized for any given set of conditions must be determined experimentally. Flaring is usually too costly for treatment of nitric acid plant tail gas because of the large volume of gas and low initial NO_x concentration.*

---

* For example, a typical 100 ton/day nitric acid plant generates about 7800 scfm of tail gas containing 0.08 - 0.30 vol. percent NO_x.

TECHNICAL EVALUATION OF MOLECULAR SIEVE CONTROL TECHNOLOGY

General Description of Molecular Sieves

The term "molecular sieve" was originated by J. W. McBain to describe fine porous solid materials which have a structure of channels and voids which permits them to act as sieves on a molecular scale. A molecular sieve has pores of a very uniform size which are uniquely determined by the unit structure of the crystal. These pores will completely exclude molecules which are larger than their diameter.

An important type of molecular sieve is the zeolites, which are crystalline, hydrated aluminosilicates of the alkali, and alkaline earth elements. The structure of zeolites consists of a three-dimensional network of SiO_4 and AlO_4 tetrahedra linked together by sharing all the oxygen atoms. There are 34 known species of natural zeolites and about 100 types of synthetic zeolites, although only a few have practical significance at the present time.[8] Zeolites must be dehydrated in order to be used as molecular sieves, and the structure after complete dehydration must remain intact. Uncontrolled dehydration can collapse the zeolite structure.

The selectivity of a molecular sieve for a particular adsorbate depends not only on the dimensions of the interstitial spaces in the sieve crystal, but also on the polarity of the adsorbate, and, in the case of hydrocarbons, the extent of carbon-bond saturation of the adsorbate.

Use of Molecular Sieves for NO_x Recovery

In 1955, Addison and Barrer[9] studied the adsorption of nitric oxide on natural and synthetic zeolites. They found that adsorbed nitric oxide underwent the following disproportionation reaction:

$$4\ NO \rightleftharpoons N_2O + N_2O_3 \quad . \qquad (20)$$

Molecular sieves have shown a high adsorption capacity for nitrogen dioxide but essentially no capacity for adsorbing nitric oxide by itself. However, in the presence of oxygen, molecular sieves can catalyze the oxidation of nitric oxide to nitrogen dioxide which will subsequently adsorb.

Sundaresan, et al.[10] studied the use of molecular sieves for the treatment of nitric acid tail gas. The tail gas was simulated by a nitrogen stream containing 3.5 percent oxygen to which was added 1800 to 2500 ppm of nitric oxide. A synthetic zeolite was used as the adsorbent. The performance of the adsorbent was tested by cycling it through periods of adsorption followed by desorption using either hot air or steam and hot air as a purge. Adsorbed NO_x was recovered as enriched NO_x and nitric acid. The experimental results showed an initial adsorption capacity of 5 to 6 lb NO_x removed per 100 lb bed which decreased after 11 cycles to 2 to 3 lb NO_x removed per 100 lb bed.

Several other studies have been carried out on the adsorption of nitrogen dioxide alone on a variety of molecular sieves. Krasnyy, et al.[11] examined the effect of SiO_2/Al_2O_3 ratio on the adsorption of NO_2. Dealuminated mordenite with an SiO_2/Al_2O_3 ratio of 13:1 was found to have the highest adsorption capacity at low relative pressures of NO_2. More highly dealuminated mordenites and commercial acid-resistant zeolites had lower capacities. Similar observations were obtained in a study by Lewis[12].

Joithe[13], et al., examined the adsorption of NO/NO_2 mixtures from a dry carrier gas. The results showed that molecular sieves have a high capacity for NO_2. Mixtures of NO and NO_2 can also be adsorbed provided that oxygen is present in the carrier gas to oxidize the NO. After exposure of the sieves to NO_x in a carrier gas saturated with water, they can be reactivated without a loss of loading capacity for adsorbing NO_x from a dry carrier gas provided the reactivation process has desorbed all of the water vapor.

The Union Carbide Corporation has been actively working on the use of molecular sieves for NO_x removal from nitric acid plant tail gas for over five years. Extensive laboratory screening tests

were carried out to select the product best suited for the removal and recovery of NO_x from process streams. These included laboratory adsorption selectivity determinations, equilibrium loading determinations, catalytic activity measurements, mass transfer rate measurements, and cyclic life testing. This work led to a pilot scale test program and thereby to the development of the PuraSiv N process to be considered here.

Description of PuraSiv N Process*

There are two process flow schemes which can be employed for the PuraSiv N process. The choice between the two is based primarily on economic considerations rather than the differences between the flow schemes. In general, the scheme referred to as the 2-bed process is the economically preferred scheme for nitric acid plants smaller than about 200 tons/day. Above 200 tons/day, the scheme referred to as the 4-bed process is the economically preferred scheme.

Figure 6 shows the process flow scheme of the 2-bed system. Tail gas (Stream 1) from the nitric acid plant absorption tower is chilled from the absorption tower overhead temperature, typically 85 - 95 F, to 45 - 55 F, the exact temperature level being a function of the NO_x concentration, in the feed chiller. The water content is thus reduced to its saturation level at the lower temperature level. Brine solution from a chilled water unit is the cooling medium for this exchanger.

The condensate formed in the feed chiller is removed in the mist eliminator. The condensate reacts with the nitrogen dioxide present and forms a weak solution of nitric acid which is sent to storage (Stream 2). Alternately, this weak acid could be recycled to an intermediate stage in the nitric acid absorption tower. Entrained water and nitric acid mist are removed from the chilled gas by a wire mesh pad in the mist eliminator.

* Based on information obtained from Union Carbide Corporation.

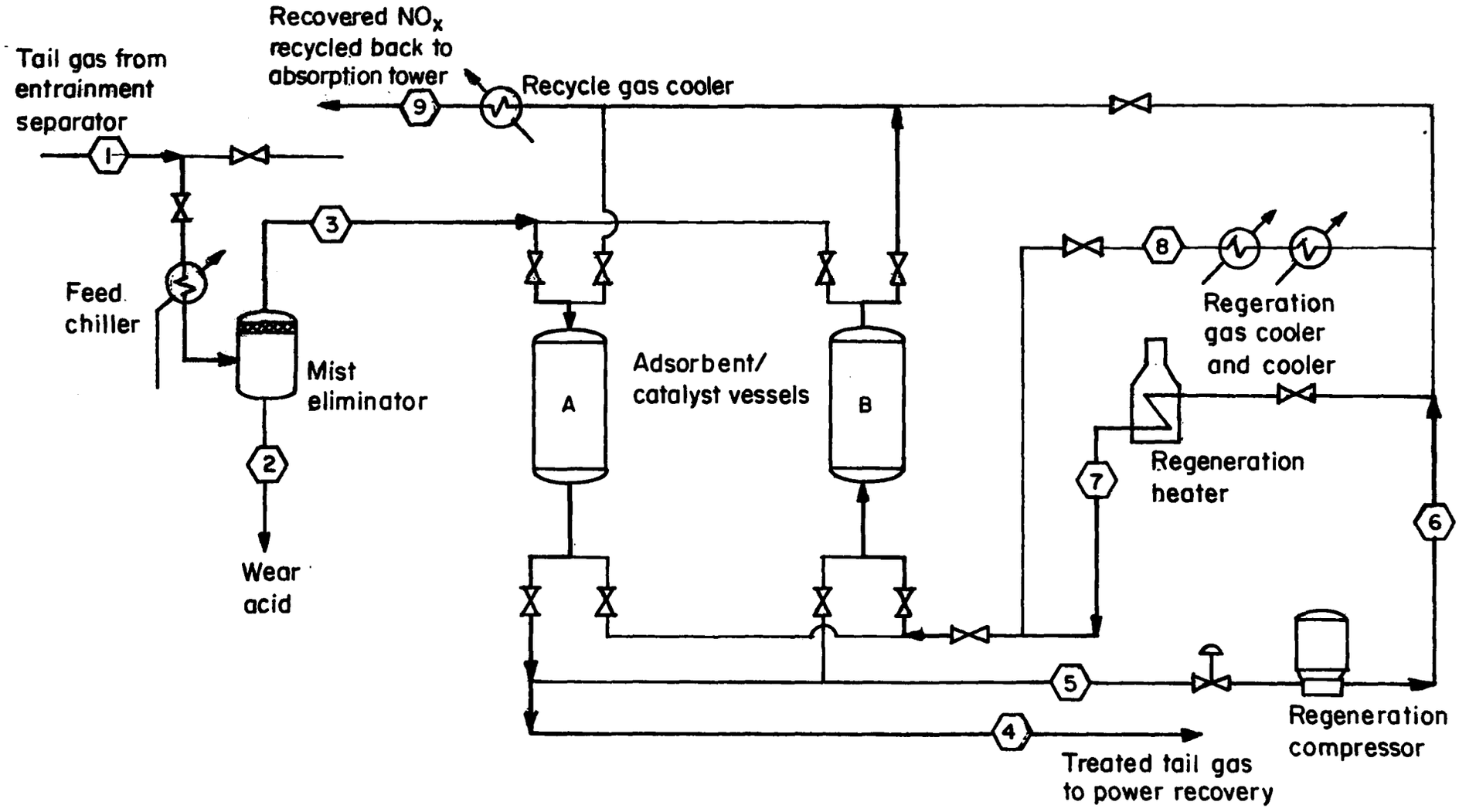

FIGURE 6. TWO-BED PURASIV N PROCESS (VESSEL A UNDER ADSORPTION AND VESSEL B UNDER REGENERATION HEATING)

The overhead from the mist eliminator (Stream 3) flows downward through the adsorbent/catalyst vessel, A, which is operating on the adsorption step of its cycle. The tail gas passes downflow through the compound bed of desiccant and NO_x removal grade adsorbent/catalyst for water and NO_x removal, respectively. The particle size of the desiccant and adsorbent/catalyst is selected to provide high mass transfer rates, assuring efficient bed utilization and minimum adsorbent inventory. The adsorbent/catalyst beds are sized to minimize pressure drop through them while maintaining a velocity high enough for good flow distribution and mass transfer characteristics.

The effluent stream from the adsorbent/catalyst vessel is split into two streams. About 80 percent of the treated tail gas (Stream 4) is returned to the nitric acid plant for power recovery. The remaining 20 percent of the effluent stream (Stream 5) is used to regenerate the absorbent/catalyst bed in the vessel which is operating on the regeneration step of its cycle. The regeneration stream represents an internal recycle stream between the nitric acid plant absorption tower and the PuraSiv N unit. Therefore, the flow rate of the treated tail gas sent to power recovery is equal to that of the tail gas before the addition of the PuraSiv N unit.

Regeneration of the adsorbent/catalyst bed is effected in a "thermal pulse" cycle. The regeneration gas (Stream 5) is first compressed (Stream 6) in the regeneration compressor. The gas is then heated in the regeneration heater, to 550 F (Stream 7) and passed upflow through the adsorbent/catalyst bed until approximately 40 percent of the bed is at the regeneration temperature. Once this heat zone is established, the gas is directed through the regeneration gas cooler and chiller, instead of the regeneration heater. Tower water and brine solution from a chilled water unit are the cooling media for the regeneration gas cooler and chiller, respectively. The cold regeneration gas (Stream 8), 50 F, is also directed upflow through the adsorbent/catalyst bed pushing the heat zone through the bed in a "thermal pulse", accomplishing NO_2 and then H_2O desorption. The cool gas simultaneously

cools the bed behind the heat pulse in preparation for the next adsorption step. Complete regeneration is assured by selecting time periods for the heating and cooling steps that do not allow the cooling front to overtake the heating front before the heating front passes the bed exit.

The NO_2-rich effluent gas stream (Stream 9) is cooled, using tower water, to a maximum temperature of 95 F in the recycle gas cooler, and returned to the nitric acid plant upstream of the absorption tower. Alternately, if the nitric acid plant cooler-condenser were adequate, the recycle gas cooler could be eliminated and the recycle regeneration gas returned to the nitric acid plant upstream of the cooler-condenser. In either event, the nitric acid plant absorption tower must be able to accommodate the internal recycle stream required for regeneration. The effect of this increased load on the performance of the absorption tower is accounted for in the design of the PuraSiv N unit.

At automatically controlled intervals the function of each adsorbent/catalyst vessel changes to provide continuous and uninterrupted NO_x removal and recovery. The following block diagram illustrates a complete cycle.

<table>
<tr><th rowspan="2">Adsorbent/Catalyst Vessel</th><th colspan="4">Percent of Cycle
0 50 100</th></tr>
<tr><td colspan="2" rowspan="2">Adsorption</td><td colspan="2">Regeneration</td></tr>
<tr><td>Heating</td><td>Cooling</td></tr>
<tr><td rowspan="2">Vessel B</td><td colspan="2">Regeneration</td><td colspan="2" rowspan="2">Adsorption</td></tr>
<tr><td>Heating</td><td>Cooling</td></tr>
</table>

A generalized material balance for the 2-bed PuraSiv N process applied to a 100 ton/day nitric acid plant is shown in Table 1.

Figure 7 shows the process flow scheme of the 4-bed system. The only difference between this flow scheme and that of the 2-bed system is that the 2-bed system employs two adsorbent/catalyst vessels with one vessel on adsorption and the other on "thermal pulse" regeneration in a flow direction countercurrent to adsorption, while the 4-bed system employs four adsorbent/catalyst vessels with two vessels on adsorption, staggered by one-half of the time required for an adsorption step, one vessel on regeneration heating in a direction countercurrent to adsorption and one vessel on cooling in a direction cocurrent to adsorption. All statements applicable to the chilling of the tail gas prior to adsorption, the adsorption step of the cycle, the properties of the desiccant and NO_x removal grade adsorbent/catalyst, the source of the regeneration gas and the recycle of the regeneration gas to the nitric acid plant for the 2-bed system are also applicable to the 4-bed system.

Referring to Figure 7, the tail gas (Stream 1) from the nitric acid plant absorption tower is chilled in the feed chiller, and passed through the mist eliminator for the removal of entrained water and acid mist. The weak solution of nitric acid (Stream 2) collected in the mist eliminator is sent to storage or recycled to the nitric acid absorption tower. The overhead from the mist eliminator (Stream 3) flows downward through either of the two adsorbent/catalyst vessels, A or B, which are operating on the adsorption step of their respective cycles.

The effluent streams from the two vessels operating in parallel are combined in the adsorption effluent manifold and then split into two streams. About 85 percent of the treated tail gas (Stream 4) is returned to the nitric acid plant for power recovery, while the remaining 15 percent of the effluent stream (Stream 5) is used to regenerate the absorbent/catalyst beds in the vessels which are operating on the cooling and regeneration heating steps of their respective cycles.

TABLE 1. GENERALIZED MATERIAL BALANCE FOR 2-BED PURASIV N PROCESS APPLIED TO 100 TON/DAY NITRIC ACID PLANT

	Tail Gas From Absorption Tower	Weak Acid	Absorber Feed	Treated Tail Gas	Recycle Purge Gas	Compressed Recycle Purge Gas	Heated Purge Gas	Cooled Purge Gas	Recycle Gas to Acid Plant[a]
Stream Number	1	2	3	4	5	6	7	8	9
Temperature, F	85	45	45	70	70	135	500	50	60-95
Pressure, psig	92	91	90	88	88.5	108	106.5	106.5	105
Composition, lb/hr									
N_2	47,140		47,140	38,225	8,915	8,915	8,915	8,915	8,915
O_2	1,683		1,632	1,283	299	299	299	299	299
NO_2	30		143	3	1	1	1	1	1
NO	178		93						
HNO_3		23							
H_2O	177	133	44						44
Total	49,208	156	49,052	39,511	9,215	9,215	9,215	9,215	9,541
Moles/Hr	1752.6		1743.2	1405.4	327.7	327.7	327.7	327.7	366.3

(a) Average composition.

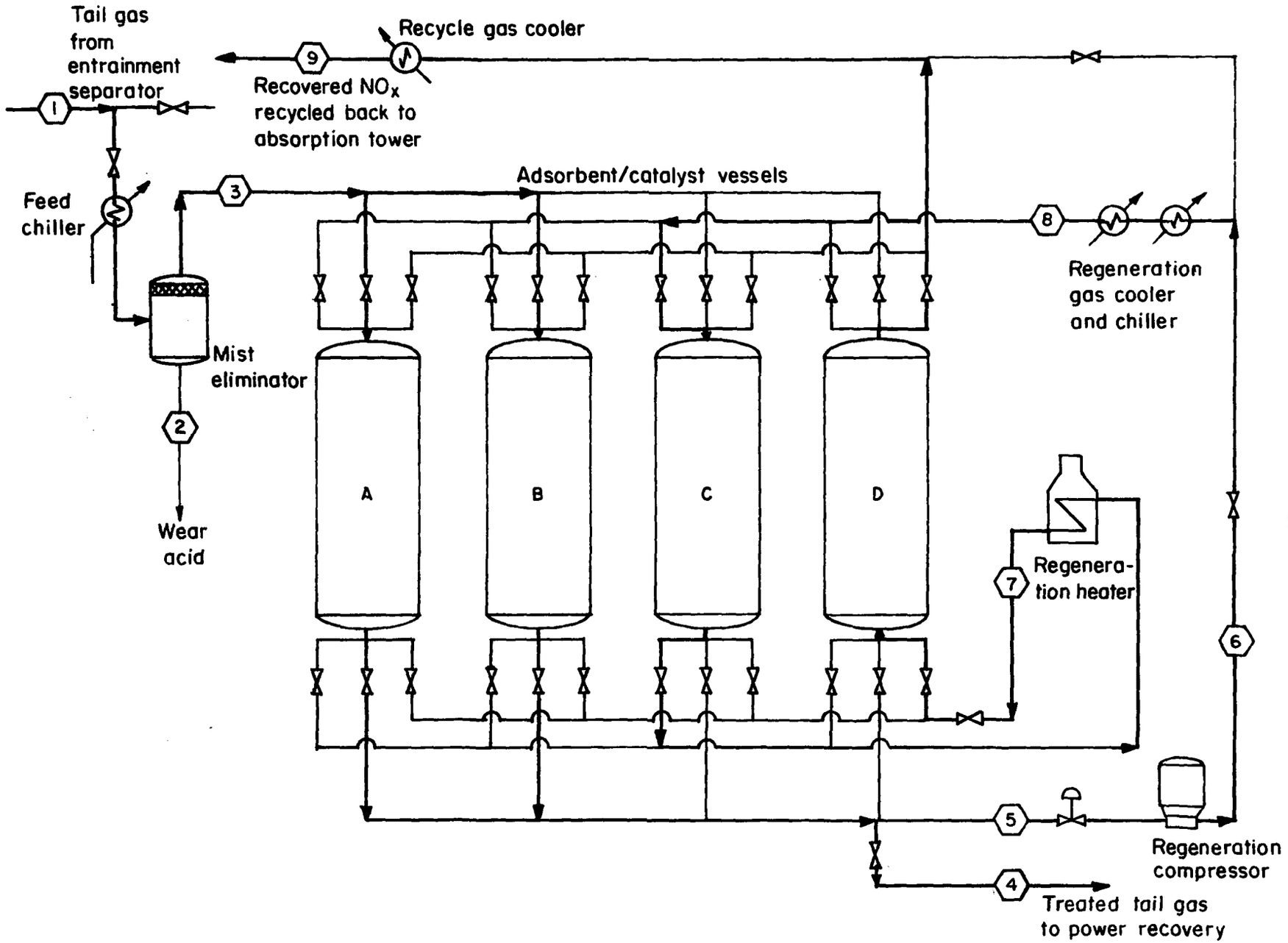

FIGURE 7. FOUR-BED PURASIV N PROCESS (VESSELS A AND B UNDER ADSORPTION, VESSEL C UNDER REGENERATION COOLING, AND VESSEL D UNDER REGENERATION HEATING)

The regeneration gas (Stream 5) is compressed in the regeneration compressor, and then cooled to 50 F in the regeneration gas cooler and chiller. The cool regeneration gas (Stream 8) is employed first to cool the adsorbent/catalyst bed which is hot from a previous regeneration heating step. As the cooling gas passes downflow through this hot bed, it is heated as the bed cools. This heated regeneration gas then passes through the regeneration heater, where make-up heat is provided. This gas (Stream 7), now at 550 F, is used to regenerate the adsorbent/catalyst bed loaded with NO_2 from a previous adsorption step. The hot gas, passing upflow through the adsorbent/catalyst vessel, transfers heat to the molecular sieve, accomplishing thermal desorption of the NO_2 and H_2O from the bed. Complete regeneration is assured by selecting an adequate heating-cooling period and regeneration gas rate to allow the heating front to pass through the bed exit prior to the end of this step of the cycle. The NO_2-rich effluent gas stream (Stream 9) is then cooled to a maximum temperature of 95 F in the recycle gas cooler, and returned to the nitric acid plant absorption tower.

At automatically controlled intervals the function of each adsorbent/catalyst vessel changes, so that two vessels, staggered by one-half of the time required for an adsorption step, are on adsorption, one vessel is on cooling, and one vessel is on heating at all times. The following block diagram illustrates a complete cycle.

<table>
<tr><th rowspan="2">Adsorbent/Catalyst Vessel</th><th colspan="4">Percent of Cycle</th></tr>
<tr><th>0 25 50 75 100</th></tr>
<tr><td>Vessel A</td><td colspan="2">Adsorption</td><td>Heating</td><td>Cooling</td></tr>
<tr><td>Vessel B</td><td>Cooling</td><td colspan="2">Adsorption</td><td>Heating</td></tr>
<tr><td>Vessel C</td><td>Heating</td><td>Cooling</td><td colspan="2">Adsorption</td></tr>
<tr><td>Vessel D</td><td>Adsorption</td><td>Heating</td><td>Cooling</td><td>Adsorption</td></tr>
</table>

A generalized material balance for the 4-bed PuraSiv N process applied to a 300 ton/day nitric acid plant is presented in Table 2.

Performance of the PuraSiv N Process

The first commercial PuraSiv N unit was started up in May, 1974, on a 55 ton/day nitric acid plant of Hercules, Inc. in Bessemer, Alabama. The unit is designed to remove and recover up to 3300 ppm NO_x. The tail gas contains 3 percent oxygen and is water saturated at temperature and pressure. The maximum design tail gas flow rate for the unit is 5,000 scfm. The design basis for the unit is given in Table 3.

A second PuraSiv N unit was started up in August, 1974, also on a 55 ton/day nitric acid plant at the U. S. Army's Holston Defense Corporation in Kingston, Tennessee. This unit is designed to remove and recover up to 3,000 ppm NO_x from tail gas containing 2.8 percent oxygen and saturated with water at temperature and pressure. The maximum design tail gas flow rate for this unit is 4,700 scfm. The design basis for this unit is also given in Table 3.

Both commercial PuraSiv N units use treated tail gas for the regeneration of the NO_x adsorbers. The units contain two NO_x adsorbers (2-bed process), operating on a four hour adsorption-four hour regeneration cycle. Both units are skid mounted and were shop fabricated and assembled. The battery limits plot size for each unit is about 400 ft^2.

Tests by Union Carbide Corporation

Union Carbide made a three-day performance run at the two commercial installations of the PuraSiv N process immediately after start up. The performance records for the Hercules and Holston units are shown in Tables 4

TABLE 2. GENERALIZED MATERIAL BALANCE FOR 4-BED PURASIV N PROCESS APPLIED TO 300 TON/DAY NITRIC ACID PLANT

	Tail Gas From Adsorption Tower	Weak Acid	Absorber Feed	Treated Tail Gas	Recycle Purge Gas	Compressed Recycle Purge Gas	Heated Purge Gas	Cooled Purge Gas	Recycle Gas to Acid Plant[a]
Stream Number	1	2	3	4	5	6	7	8	9
Temperature, F	85	45	45	70	70	135	500	50	60-95
Pressure, psig	92	91	90	88	88.5	111	107	109.5	105
Composition, lb/hr									
N_2	125,928		125,928	106,283	19,645	19,645	19,645	19,645	19,645
O_2	4,493		4,363	3,578	662	662	662	662	662
NO_2	75		354	9	2	2	2	2	2
NO	442		231						
HNO_3		62							
H_2O	471	355	116						
Total	131,409	417	130,992	109,870	20,309	20,309	20,309	20,309	21,116
Moles/Hr	4680.4		4655.6	3907.8	722.3	722.3	722.3	722.3	743.9

(a) Average composition.

TABLE 3. DESIGN BASIS FOR HERCULES AND HOLSTON PURASIV N UNITS

	Hercules Unit	Holston Unit
Battery Limits Tail Gas Feed Conditions:		
Flow rate (60 F & 14.7 psia), maximum	5,000 scfm	4,700 scfm
Temperature, maximum	90 F	100 F
Pressure, minimum	90 psig	92 psig
Composition		
O_2	3.0 percent	2.8 percent
NO_x, maximum	3,300 ppm	3,000 ppm
HNO_3	Saturated at temp. & pressure	
H_2O	Saturated at temp. & pressure	
N_2	Balance	Balance
Others	None	None

TABLE 4. PERFORMANCE OF HERCULES PURASIV N UNIT DURING THREE DAY PERFORMANCE RUN AFTER START UP

	May 26	May 27	May 28
NO_x in Effluent			
Average, ppm	2	2	5
Range, ppm	0-6	0-7	0-25
NO_x in Feed			
Average, ppm	2,600	2,400	2,450
Range, ppm	2,000-3,000	2,300-2,500	2,300-2,500
Average Gas Flow			
Tail gas flow, scfm	4,850	4,650	4,600
Recycle gas flow, scfm	950	950	950
Total gas flow, scfm	5,800	5,600	5,550

TABLE 5. PERFORMANCE OF U.S. ARMY - HOLSTON PURASIV N UNIT DURING THREE DAY PERFORMANCE RUN AFTER START UP

	August 17	August 18	August 19
NO_x in Effluent			
Average, ppm	< 1	6	7
Range, ppm	0-2	0-30	0-30
NO_x in Feed			
Average, ppm	4,100	3,700	3,900
Range, ppm	3,000-5,700	3,500-4,400	2,500-4,700
Average Gas Flow			
Tail gas flow, scfm	4,400	4,400	4,400
Recycle gas flow, scfm	1,100	1,100	1,100
Total gas flow, scfm	5,500	5,500	5,500

and 5, respectively. More than 99 percent of the NO_x present in the tail gas stream was recovered in both units. In each case, the on-stream NO_x adsorber is not switched to regeneration until breakthrough of NO_x in the effluent has occurred. The Hercules unit provided an average daily effluent NO_x concentration of 2 to 5 ppm (0.08 lb NO_x/ton acid) under design conditions of flow and feed concentration. The Holston unit provided an average daily effluent NO_x concentration of 1 to 7 ppm (0.1 lb NO_x/ton acid) under NO_x feed concentrations 35 percent higher than design.

Union Carbide performed a field evaluation of the Hercules unit during the first two weeks of June following start up.[14] After about 40 commercial cycles, the PuraSiv N adsorbers were performing well within design specifications. NO_x effluent concentration traces under fairly typical operating conditions are shown in Figure 8. While treating about 6,000 scfm of chilled tail gas containing about 2,600 ppm NO_x at 50 F and 50 psig, the adsorbers provided 4 ppm NO_x after four hours of adsorption time. The design guarantees an average of 50 ppm NO_x during a four hour adsorption cycle. One percent breakthrough occurred slightly earlier in Cycle No. 43 A than in No. 39 B (460 versus about 510 minutes). Based on the average feed conditions, the reverse would have been expected. This difference is attributed to fluctuations in feed NO_x concentrations and inherent differences in the two beds. When a malfunctioning valve caused hot regeneration gas to enter the adsorbing bed, higher NO_x effluent concentrations (up to 45 ppm) were observed after four hours adsorption time.

Tests by U. S. Army

The U. S. Army ran several three-day performance tests on the Holston PuraSiv N unit during the period August, 1974 to January, 1975[15]. The results of these tests are summarized in Table 6. The test in August, 1974 coincides with the test performed by Union Carbide and reported in

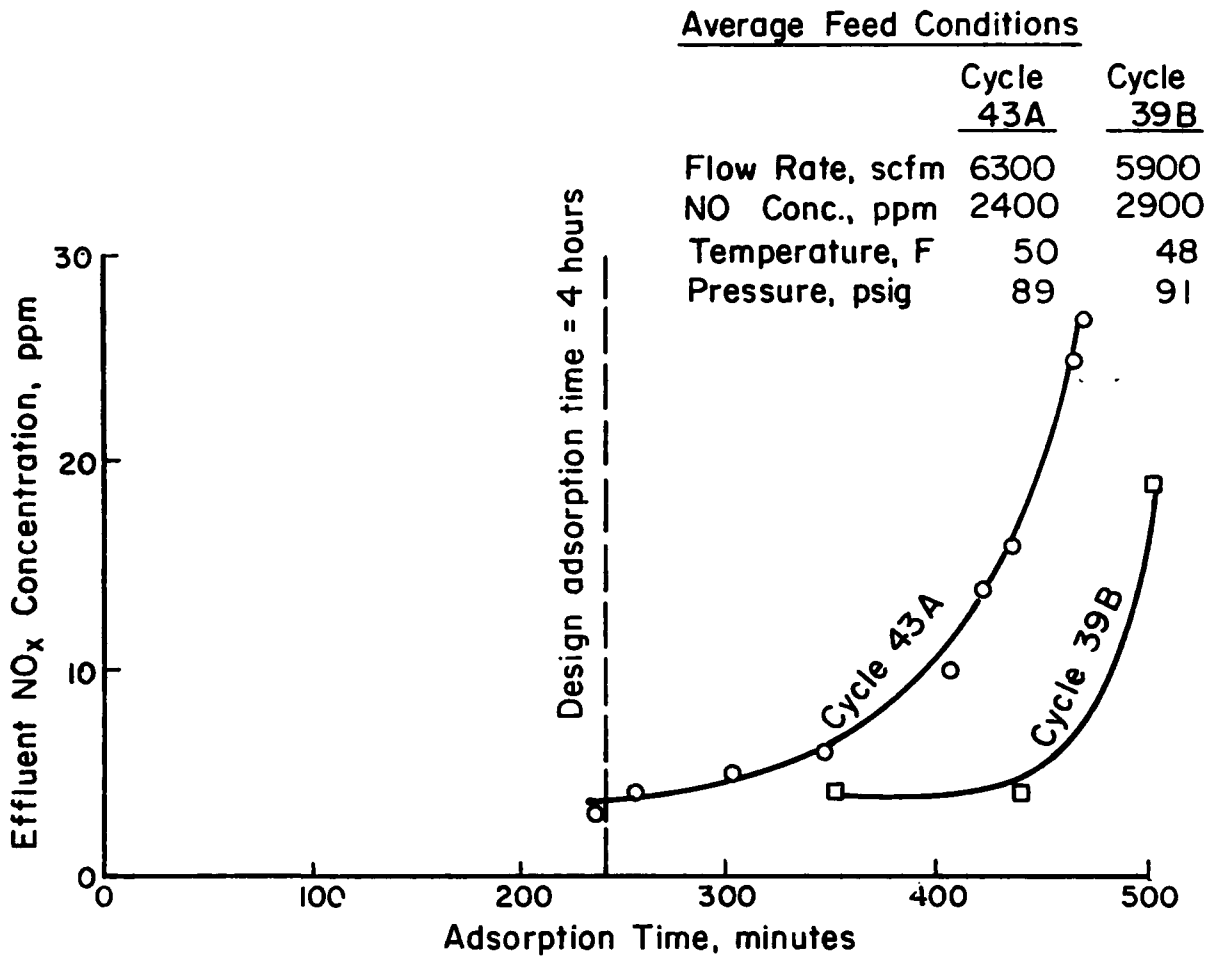

FIGURE 8. PERFORMANCE OF HERCULES ADSORPTION BEDS AFTER ABOUT 40 CYCLES

TABLE 6. THREE DAY PERFORMANCE TESTS OF THE HOLSTON PURASIV N UNIT BY THE U.S. ARMY

Time Period	Average Inlet NO_x Concentration, ppm	Average Outlet NO_x Concentration, ppm	Average NO_x Removal, percent
August, 1974	4,090	17.1	99.6
October, 1974	3,429	59.0	98.3
November, 1974	2,760	33.2	98.8
December, 1974	1,324	14.2	98.9
January, 1975	1,833	18.4	99.0

Table 5. The discrepancy in average outlet NO_x concentration can be attributed to different methods of analysis. The Union Carbide data is based on "Draeger" tube analyses for NO_x which were taken every two hours. The U. S. Army data is based on continuous monitoring of NO_x concentrations using a chemiluminescent analyzer for NO and a photometric ultraviolet analyzer for NO_2. However, the three-day average NO_x emission of 17.8 ppm was well within the required acceptance specifications that NO_x emissions average under 50 ppm over an eight hour period. A statistical analysis of the data resulted in a projected probability that the outlet NO_x concentration would exceed an average of 50 ppm over an 8-hour period less than one percent of the time.

In the three-day performance run in October, 1974, the NO_x emissions averaged 59.0 ppm which slightly exceeded the purchase specification of 50 ppm over an eight-hour period. The abnormal sieve operation was attributed to improper adsorption in adsorber vessel B. The three-day performance runs in November and December, 1974, and in January, 1975, yielded average NO_x emissions below the 50 ppm specification. However, the run in November was terminated after 17 hours because of a maintenance shut down of the acid plant. During the run in January, adsorber vessel B continued to exhibit high NO_x emissions with respect to vessel A. The tail gas flow rates during the performance runs are not known at the present time.

An inspection of Table 6 indicates that the inlet NO_x concentration decreases as ambient temperature decreases (perhaps with the exception of the run in January). Figure 9 presents the variation of inlet NO_x concentration with temperatures of product acid, injection water, and filtered water. Filtered water cools the absorption tower trays and then is used in the cascade cooler upstream from the tower. At the present time, it is not known whether the molecular sieve continued to meet performance specifications as the NO_x loading increased with ambient temperature.

The instrumental NO_x analyses were compared with EPA Method 7 analyses by Midwest Research Institute. Instrumental inlet NO_x analyses were found to agree within 6.5 percent of Method 7. However, instrumental

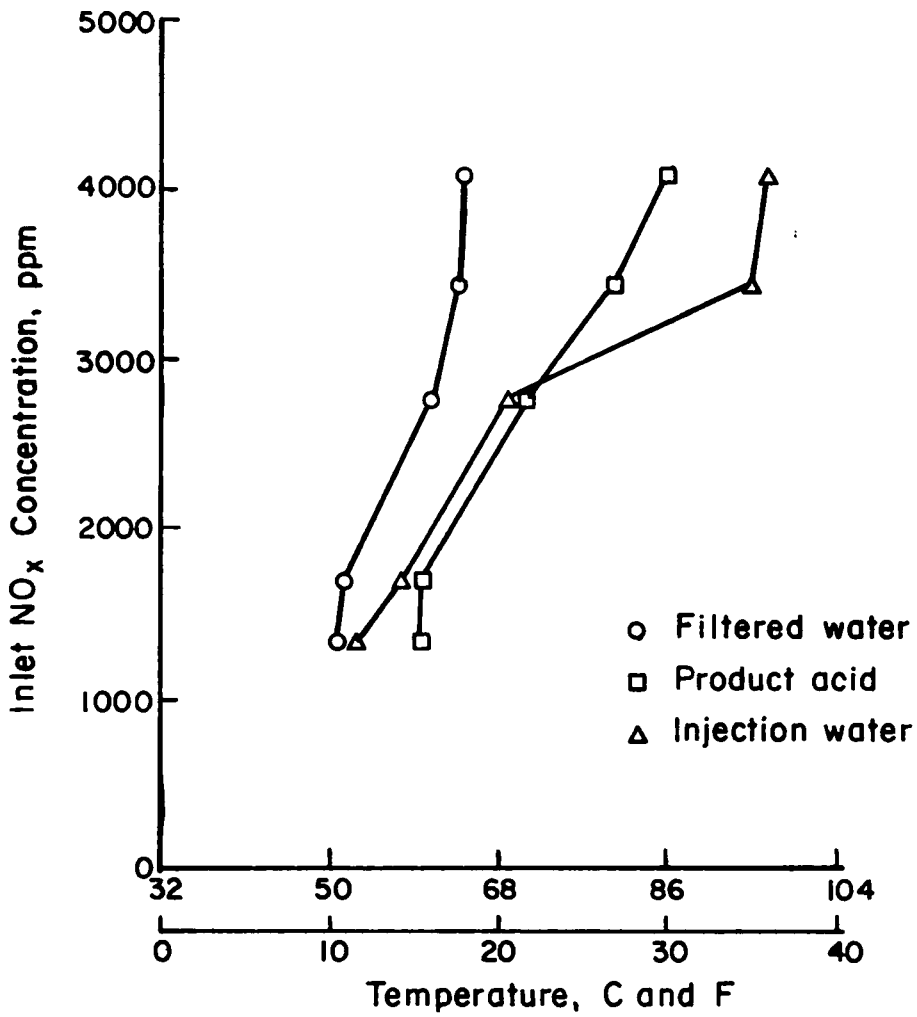

FIGURE 9. INLET NO_x CONCENTRATION TO ADSORPTION BEDS AS A FUNCTION OF TEMPERATURE

outlet analyses were found to agree only within +56.1 percent of Method 7 at about 10 ppm NO_x and -54.8 percent of Method 7 at about 280 ppm NO_x. The outlet analyzer apparent error has been attributed to one or more of the following:

(1) High noise levels and limiting accuracy

(2) Difference between cell pressure and calibration pressure

(3) Presence of nitric acid mist.

Tests by Engineering-Science, Inc.

Engineering-Science, Inc., was given a contract by the EPA Control Systems Laboratory for the purpose of testing the Hercules PuraSiv N unit. Simultaneous measurement of NO_x concentrations in the PuraSiv N inlet and outlet streams were performed during 11 individual four-hour adsorption cycles in the period March 5 through 14, 1975, when the molecular sieve was about nine months old, using continuous photometric analyzers. The continuous measurements were supplemented by NO_x determinations using grab samples taken and analyzed by EPA Method 7. The complete results of this test program are presented in a draft report prepared by Chehaske and Greenberg.[16]

Two different inlet sampling sites were used during the tests. During the first eight cycles of testing, the inlet sampling was conducted between the mist eliminator and the two adsorption beds. During the final three cycles of testing, the inlet sampling was conducted upstream of the feed chiller and mist eliminator. The latter sampling site was added at the request of Union Carbide under the rationale that because the feed chiller and mist eliminator are part of the packaged system, a more representative system evaluation would be obtained if samples were taken upstream from the feed chiller. However, acid mist was not measured because instrumentation for continuous monitoring was not available and isokinetic grab sampling would be very difficult because of the high pressure of the tail gas stream.

The results of the NO_x emission tests are summarized in Table 7. The average flow rates and average inlet and outlet NO_x concentrations were calculated by numerical integration of the data tabulated by Engineering-Science.

TABLE 7. PERFORMANCE TESTS OF THE HERCULES PURASIV N UNIT BY ENGINEERING-SCIENCE

Run No.	Average Gas Flow Rate, scfm			Average Inlet NO_x Concentration, ppm	Average Outlet NO_x Concentration, ppm	Average NO_x Removal, percent	Adsorption Bed	Total Inlet Mass of NO_x, grams	Total Mass of NO_x Absorbed, grams
	Tail Gas	Recycle Gas	Total						
1	4854	1025	5879	2541	113	95.6	B	172,780	165,190
2	4633	1055	5688	3076	154	95.0	B	214,240	203,540
3	4447	1035	5482	2799	140	95.0	A	198,370	188,990
4	4541	1010	5551	3133	125	96.0	B	221,610	212,740
5	4549	1020	5569	2258	99.0	95.6	A	157,200	150,330
6	3815	1025	4840	1006	16.4	98.4	A	59,280	58,300
7	3392	1020	4412	2332	62.6	97.3	B	128,150	124,680
8	4014	1020	5034	2325	73.2	96.9	A	145,690	141,110
9	4016	1040	5056	2937	91.7	96.9	B	220,100	213,000
10	5040	1025	6065	3120	137	95.6	A	235,580	225,250
11	4449	1020	5469	3114	139	95.5	A	212,880	203,410

The tail gas flow rate was calculated by subtracting the recycle gas flow rate from the inlet (total) gas flow rate to the sieve. Battelle calculated the average NO_x removal as follows:

$$\text{percent } NO_x \text{ removal} = 100 \left(1 - \frac{\text{average outlet ppm } NO_x}{\text{average inlet ppm } NO_x}\right) .$$

This value corresponds to what is termed the total percent reduction due to adsorption by Engineering-Science and can also be calculated by dividing the total mass of NO_x adsorbed by the total inlet mass of NO_x. The inclusion of a percent reduction of NO_x due to regeneration does not appear to be relevant.

A plot of average NO_x removal versus total mass loading on the sieve for runs 1 through 11 is shown in Figure 10. The graph reveals that the average removal efficiency and total mass loading follow an inverse relationship. The graph also shows that the average removal efficiences based on inlet concentrations measured upstream of the feed chiller are only slightly higher than efficiencies at similar mass loadings based on concentrations measured after the mist eliminator.

During all the cycles tested the instantaneous control efficiency reached a maximum value within the first hour of the cycle and then gradually decreased for the remainder of the cycle. All cycles except one exhibited a temporary decrease in instantaneous efficiency during the first 30 minutes of the adsorption cycle. The exact cause of the temporary decrease was undetermined.

The outlet NO_x concentrations listed in Table 7 show that the unit did not meet the design guarantee of an average of 50 ppm NO_x during a four-hour adsorption cycle. Before the Engineering-Science tests were performed, the PuraSiv N unit experienced an abnormal shut down which caused a back flow of nitric acid into the sieve.[17] Although a fail-safe system has now been installed, the sieve was probably damaged by the acid. However, it is significant to note that the unit still met the new source performance standard which is equivalent to about 200 ppm NO_x in the effluent.

In comparing the photometric NO_x analyses with EPA Method 7, the mean percent difference was + 8.2 percent at the inlet site after the mist eliminator and -1.9 percent at the inlet site before the feed chiller. The mean percent difference at the outlet test site was 10.7 percent,

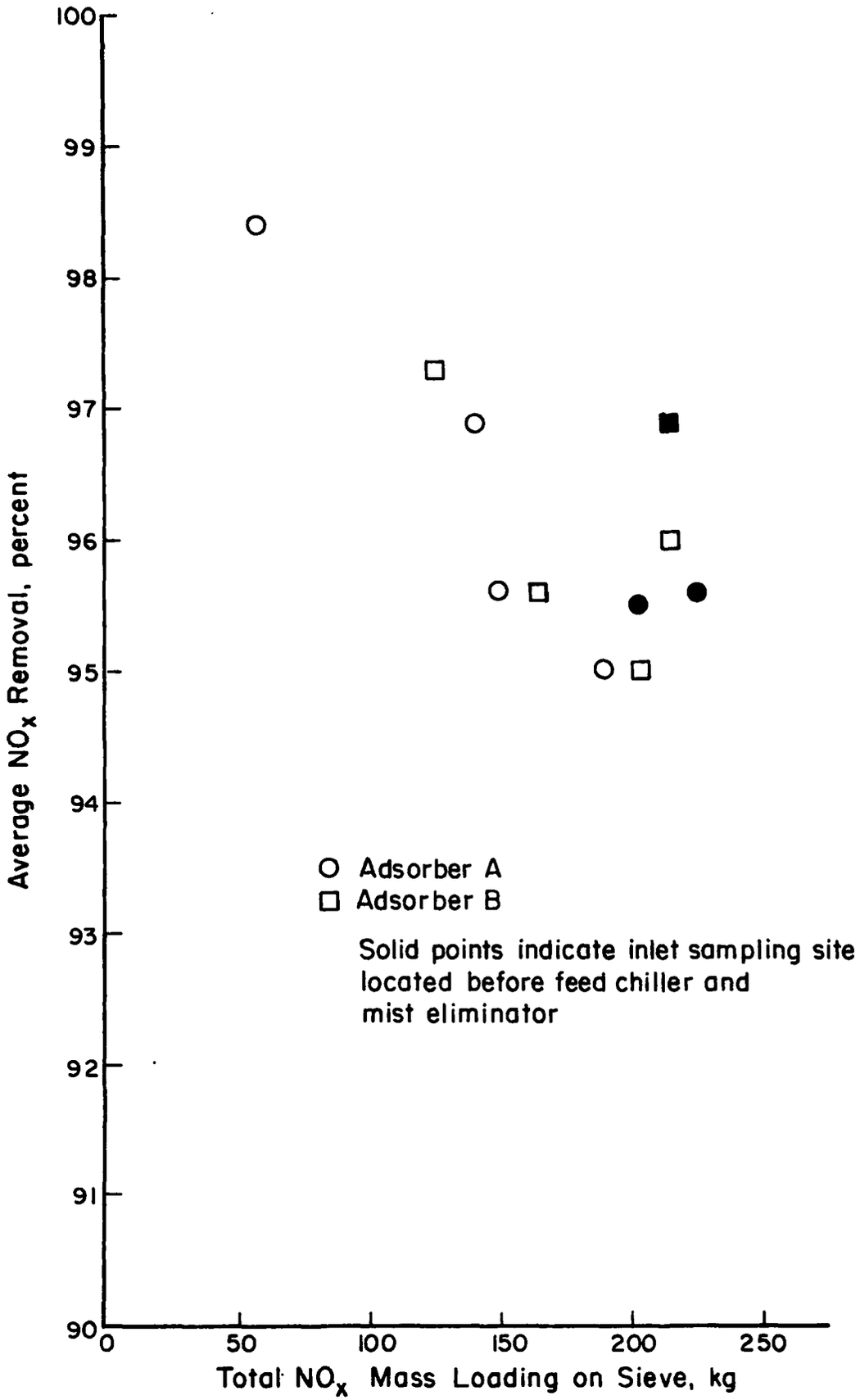

FIGURE 10. TOTAL NO_x MASS LOADING VERSUS AVERAGE NO_x REMOVAL

but the range of difference was larger at the outlet than the inlet, presumably because of greater relative errors in Method 7 at low concentrations. It is difficult to explain why there is better agreement between the two analytical methods at the test site before the feed chiller rather than after the mist eliminator. Method 7 is sensitive to nitric acid mist and vapor present in the gas while the photometric analyzer does not detect these species. More nitric acid mist would be expected ahead of the feed chiller than after the mist eliminator.

Sieve Life

The performance of the molecular sieve adsorbent used to control NO_x in tail gas from nitric acid plants is dependent upon the number of adsorption/regeneration cycles to which it has been subjected. The PuraSiv N process design is such that a maximum average effluent NO_x concentration of 50 ppm is guaranteed for a period of two years. With the passage of time, the average concentration of NO_x in the effluent is expected to gradually increase from a level which is well below that guaranteed to one which is close to it. This loss in performance is caused by the gradual but cumulative destruction of the micropores of the adsorbent as a result of exposure to the temperature swings between 45 and 500 F for adsorption and regeneration, respectively, as well as exposure to very low concentrations of nitric acid mist and vapor present in the tail gas. The effect of nitric acid on the sieve is demonstrated in the extreme case by the abnormal shut down that occurred at the Hercules unit prior to the performance tests by Engineering-Science.[16,17] The only definitive data available to Battelle for determining sieve life are the tests by the U. S. Army on the Holston unit.[15] These data indicate no significant degradation in sieve performance after six months of operation. However, one adsorber bed has continually shown better performance than the other bed. Therefore, at the present time only a six-month sieve life has been demonstrated. However, there appears to be no evidence to negate Union Carbide's claim of a two-year sieve life.

Union Carbide has tested the PuraSiv N adsorbent through 1,000 adsorption/regeneration cycles in the laboratory. The cycle consisted of 1/2 hour adsorption and 1/2 hour regeneration. At the end of 1,000 cycles, the adsorption capacity had decreased by only 5 percent. One thousand

cycles corresponds to a three-year life for the field units, but the cycle time is 8 hours rather than 1 hour. Also, it is not known whether any nitric acid was present in the adsorbate.

ECONOMIC EVALUATION OF MOLECULAR SIEVE CONTROL TECHNOLOGY

In this section the economic feasibility of the PuraSiv N process for emission control at nitric acid plants will be assessed by comparison with two of the other control processes described in a previous section of this report. The processes selected for comparison purposes are nonselective catalytic reduction with natural gas and extended absorption. Although catalytic reduction is employed at about two-thirds of the nitric acid plants practicing full abatement of NO_x emissions, the current shortage of natural gas may curtail further usage of this process. However, the alternative of urea scrubbing also is dependent on natural gas supply to the extent that ammonia required for urea production is produced from natural gas. The economic comparison of the three processes (molecular sieve adsorption, nonselective catalytic reduction with natural gas, and extended absorption) will be based on the concept of capitalized costs.

Basis and Procedures

Investments

The investments (capital costs) for the control alternatives were obtained from data on units which have been built and other data provided by system designers, vendors, and operators. The costs reported are mid-1974 estimates as updated by the Marshall and Stevens Index (390 in mid-1974). All calculations were made for two acid plant sizes, 100 and 1000 tons/day of 100 percent HNO_3. For convenience in further calculations the investments have been expressed by an equation of the form

$$\text{Investment} = A(\text{tons/day } HNO_3)^B \qquad (21)$$

where A and B are constants.

The investments include not only on-site facilities but also off-site facilities associated with utilities. The off-site investments are based on the following unit costs.

Electricity	\$360/kw
Cooling water	\$27.50/gpm

These values were determined in connection with a recent Battelle study.[18] The off-site investments are an allocated cost applied on a uniform basis for the three processes under consideration. Whether or not existing facilities can handle the utilities reuqirements is extremely site specific.

Operating and Maintenance Costs

The operating and maintenance (O & M) costs were calculated on an annual basis and include the following

- Operating labor
- Utilities (electricity, cooling water, steam, and fuel)
- Raw materials and chemicals
- Maintenance labor and materials
- Local property taxes and insurance
- By-product credits.

Table 8 lists the unit costs used in these calculations.

Again, the calculations were made for the two acid plant sizes. For convenience in further calculations the operating and maintenance costs have been expressed by an equation of the form

$$\text{O \& M Cost} = C(\text{tons/day } HNO_3)^B + D(\text{tons/day } HNO_3)^E \qquad (22)$$

where B, C, D, and E are constants. The first term here is the investment-related O & M costs, which includes maintenance and local taxes and insurance. Since this is taken as a percentage of the investment, the constant B is the same as the investment equation. The second term above includes all the other O & M costs.

TABLE 8. UNIT COSTS USED IN CALCULATING OPERATING AND MAINTENANCE COSTS

Item	Unit Cost
Electricity	1.2¢/kWh
Cooling Water	3¢/1000 gal
Process water	15¢/1000 gal
Steam	$1.2/1000 lb
Fuel oil	$12/bbl
Natural gas	$1.2/1000 ft^3
HNO_3 credit	$25/ton

Capitalized Costs

The economic comparison of the control alternatives was done through the concept of capitalized costs. The basic principle underlying this method of economic evaluation of alternatives is the indefinite and perpetual replacement of a given capital investment which has a finite life. The capitalized cost is defined as the original investment plus the present value of the perpetuity which will permit the perpetual replacement of the item.[19] For an item with an initial cost of I and a salvage value of S after n years the capitalized cost K (in present dollars) is

$$K = I + \frac{(I - S)}{(1 + i)^n - 1} \tag{23}$$

where i is the fractional annual interest rate or, more precisely, the rate of return on investment which the investor requires. This is usually of the order of 15 percent.[20] In this study, the capitalized cost associated with the investment, which will be designated K_I, was calculated from Equation 23 with the assumption of zero salvage value. That is,

$$K_I = \frac{I\ (1 + i)^n}{(1 + i)^n - 1} \quad . \tag{24}$$

The concept of capitalized costs can be extended to include annual and other periodic costs in addition to capital investments. An expression for the capitalized cost associated with the annual O & M costs can be obtained from Equation 23 by treating this like an investment with a life of 1 year but discounting to present dollars, since these are end-of-year costs. Thus,

$$K_{O\ \&\ M} = \frac{O\ \&\ M}{i} \quad . \tag{25}$$

The total capitalized cost is the sum of the term for the initial investment and that for the O & M costs.

$$K_{tot} = K_I + K_{O\ \&\ M} \tag{26}$$

In this study a 15 percent rate of return and a 12-year equipment life were used.

Investment and Operating Costs

Molecular Sieve Adsorption

The on-site investment and operating costs for the PuraSiv N process were based on data obtained from Union Carbide in February, 1975. The costs data were given as a function of tail gas flow rate. Based on data previously presented in this report, the tail gas flow rate was taken as 78 scfm/tpd. The stated accuracy for the investment costs was ± 25 percent. The data included the annual cost for the adsorbent contract and the requirements for electrical power, heat, and cooling water. Utilities requirements were verified by field data obtained by the U. S. Army at the Holston unit[15] and by Engineering-Science at the Hercules unit.[16]

As a basis for comparison, investments were sought for the two PuraSiv N units which have been built. For the 55 ton/day Holston unit the 1974 investment was $289,000. This was for a skid-mounted unit and did not include foundation work and tie-ins. This cost agrees quite well with the cost based on the Union Carbide data ($294,000 from the cost equation presented in Table 12). Hercules would not give the investment for their unit but said that Union Carbide gave them an unusually low price because it was the first-of-a-kind unit.

The costs were calculated on the basis of 2500 ppm NO_x in the tail gas and a maximum of 50 ppm NO_x in the effluent. The operating labor requirements for the molecular sieve process are known to be very low[20] and were taken as $1,000/yr for a 100 ton/day acid plant and $3,000/yr for a 1,000 ton/day acid plant. Investment and O & M costs for the PuraSiv N process on the two plant sizes are presented in Table 9.

Catalytic Reduction

Battelle personnel developed an equation expressing the investment for the catalytic reduction process as a function of plant size for an existing nitric acid plant as part of the Cost of Clean Air study.[21] The equation updated to mid-1974 is

$$\text{Investment } (\$) = 13{,}000 \ (\text{tons/day 100 percent } HNO_3)^{0.6} \ .$$

TABLE 9. COSTS OF PURASIV N PROCESS
(8000 hr/yr operating time)

Item	Plant Capacity 100 tons/day	Plant Capacity 1000 tons/day
Tail gas flow rate, 10^3 ft^3/min at 60 F and 1 atm	7.8	78.0
Investment, $		
Battery limits including license fee	440,000	3,500,000
Off sites		
Electricity	57,000	541,000
Cooling water	7,500	69,700
Site preparation	1,000	10,000
TOTAL	505,500	4,120,700
Operating and Maintenance Cost, $		
Operating labor	1,000	3,000
Molecular sieve contract	23,800	179,000
Electricity	13,900	131,000
Cooling water	3,900	36,500
Fuel oil	9,500	85,500
Subtotal	52,100	435,000
Maintenance (2.5 percent of investment/yr)	12,600	103,000
Taxes and insurance (2.5 percent of investment/yr)	12,600	103,000
TOTAL GROSS	77,300	641,000
Credit for additional HNO_3 produced	(19,000)	(190,000)
TOTAL NET	58,300	451,000
Net Operating and Maintenance Cost in $/ton HNO_3	1.75	1.35

The utility and catalyst requirements for the catalytic reduction process were based on the following values:[21,22]

Fuel (natural gas)	--	2.10×10^6 Btu/ton acid
Steam (credit)	--	1.80×10^3 lb/ton acid
Catalyst (2-year life)	--	\$0.175/ton acid.

These requirements were taken as directly proportional to the acid plant capacity. The operating labor requirements are minimal[20] and were taken as \$1,000/yr for a 100 ton/day plant and \$3,000/yr for a 1,000 ton/day plant as in the molecular sieve process. Maintenance cost was given by Searles[22] as 4 percent of investment per year. Investment and O & M costs for the catalytic reduction process on existing plants of the two sizes are presented in Table 10 for the case of an NO_x emission level below 200 ppm.

Extended Absorption

The investments for the extended absorption process were based on information supplied by J. F. Pritchard and Company, Kansas City, Missouri, the U. S. licensee of the Grande Paroisse process.[23] Operating and maintenance costs were based on values given by Boudreaux.[3] Table 11 shows the investments and O & M costs for the extended absorption process on existing 100 and 1,000 ton/day nitric acid plants for the case of an NO_x emission level below 200 ppm.

Cost Equations

Table 12 presents the equations for total investment and net O & M costs as functions of plant capacity for existing nitric acid plants for the molecular sieve, catalytic reduction, and extended absorption processes. The level of control is 50 ppm NO_x in the effluent gas for the molecular sieve process, and 200 ppm NO_x for the latter two processes. The cost savings in the molecular sieve process in going from 50 to 200 ppm NO_x in the effluent is small and shows up as a reduced cost for the molecular sieve contract. This cost savings amounts to less than 8 percent of the total gross O & M costs for the molecular sieve process.

TABLE 10. COSTS OF CATALYTIC REDUCTION PROCESS
(8000 hr/yr operating time)

Item	Plant Capacity 100 tons/day	Plant Capacity 1000 tons/day
Investment, $		
Battery limits	206,000	820,000
Site preparation	1,000	10,000
TOTAL	207,000	830,000
Operating and Maintenance Cost, $		
Operating labor	1,000	3,000
Catalyst	5,800	58,000
Natural gas	84,000	840,000
Steam	(72,000)	(720,000)
Subtotal	18,800	181,000
Maintenance (4.0 percent of investment/yr)	8,300	33,200
Taxes and insurance (2.5 percent of investment/yr)	5,200	20,800
TOTAL	32,300	235,000
Net Operating and Maintenance Cost in $/ton HNO_3	0.97	0.70

TABLE 11. COSTS OF EXTENDED ABSORPTION PROCESS
(8000 hr/yr operating time)

Item	Plant Capacity 100 tons/day	Plant Capacity 1000 tons/day
Investment, $		
Battery limits	1,200,000	6,000,000
Off sites		
Electricity	10,800	108,000
Cooling water	1,100	11,000
Site preparation	2,000	20,000
TOTAL	1,213,900	6,139,000
Operating and Maintenance Cost, $		
Operating labor	1,000	3,000
Electricity	2,900	29,000
Cooling water	600	6,000
Subtotal	4,500	38,000
Maintenance (2.5 percent of investment/yr)	30,300	153,000
Taxes and insurance (2.5 percent of investment/yr)	30,300	153,000
TOTAL GROSS	65,100	344,000
Credit for additional HNO_3 produced	(14,100)	(141,000)
TOTAL NET	51,000	203,000
Net Operating and Maintenance Cost in $/ton HNO_3	1.53	0.61

TABLE 12. EQUATIONS FOR INVESTMENT AND OPERATING COSTS FOR NO_x EMISSION CONTROL PROCESSES AT EXISTING NITRIC ACID PLANTS

Process	Total Investment, $(a)	Net Operating and Maintenance Cost, $/year
Molecular sieve (PuraSiv N)	$7{,}670C^{0.91}$ (b)	$384C^{0.91} + 602C^{0.87}$
Catalytic reduction (nonselective using CH_4)	$13{,}100C^{0.60}$	$852C^{0.60} + 206C^{0.98}$
Extended absorption (Grande Paroisse)	$48{,}600C^{0.70}$	$2{,}430C^{0.70} - 83.7C^{1.03}$

(a) Includes off sites.

(b) C equals plant capacity in short tons per day of 100 percent acid.

Capitalized Costs

Equations 24, 25, and 26 were used to calculate the capitalized costs. The investment and O & M costs for the three emission control processes under consideration were calculated for four plant sizes (100, 400, 700, and 1,000 tons/day) using the equations listed in Table 12. These costs were used in Equations 24 and 25 along with an "interest" rate, i, of 15 percent and an equipment life, n, of 12 years. Figure 11 shows the capitalized costs for the emission control processes applied to existing nitric acid plants as a function of plant capacity.

The molecular sieve process is intermediate in cost between catalytic reduction and extended absorption. While the catalytic reduction process is the least expensive, the future application of this process is in doubt because of the curtailment in natural gas supply. The cost of the extended absorption process is very dependent upon specific plant conditions, so that in some cases, especially for large plant sizes, extended absorption may be competitive with the molecular sieve process. It appears that the economic feasibility of the molecular sieve process depends on the continued shortage of natural gas. The capitalized costs of the two processes become equal when the price of natural gas reaches \$2.4/1000 ft^3.

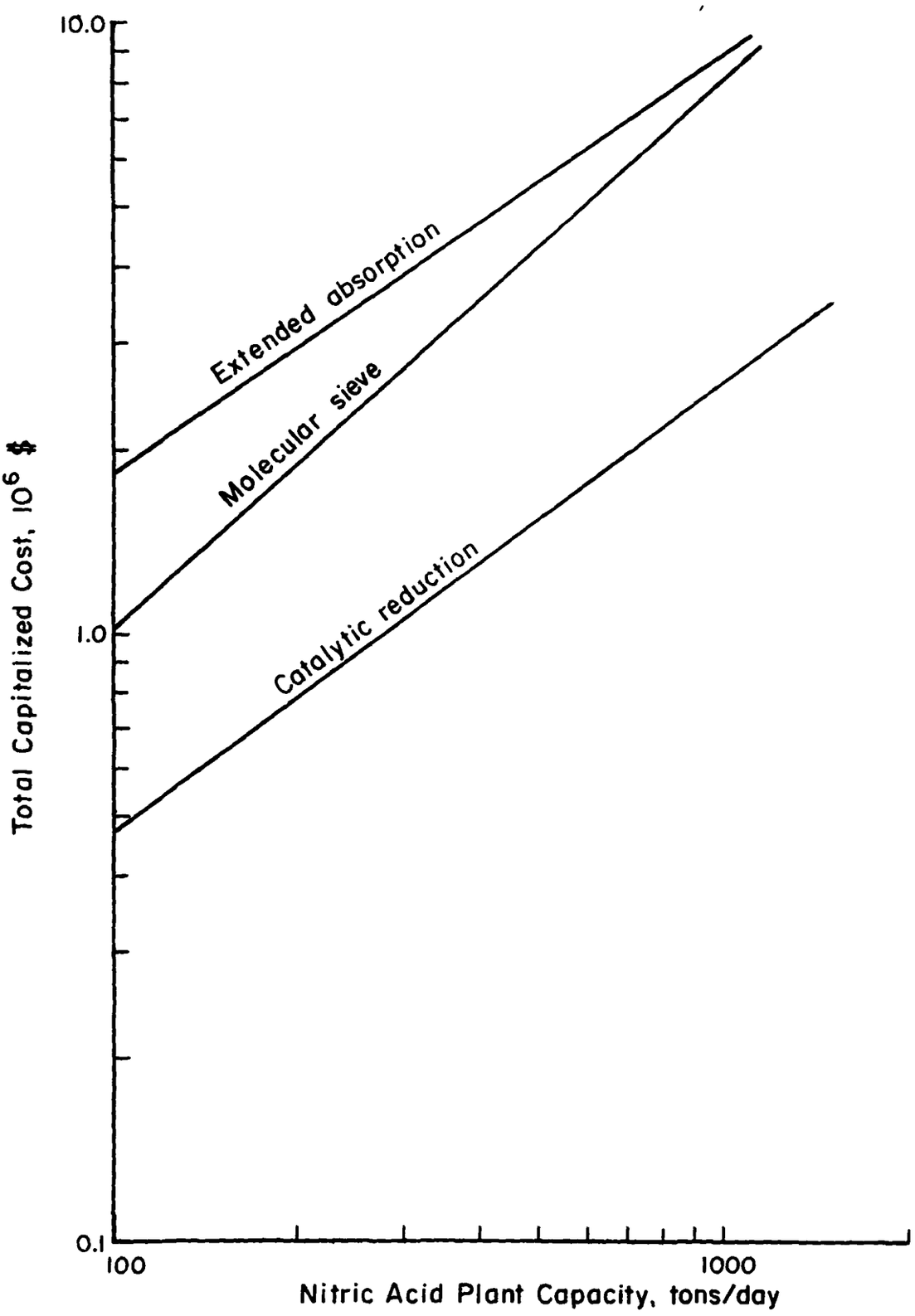

FIGURE 11. CAPITALIZED COSTS FOR NO_x EMISSION CONTROL AT NITRIC ACID PLANTS

CONCLUSIONS AND RECOMMENDATIONS

This analysis of the applicability of molecular sieve technology to the control of NO_x emissions from nitric acid plants leads to the following conclusions:

- Molecular sieve technology can control the NO_x emissions to well within the New Source Performance Standard for nitric acid plants (1.5 kg NO_x/metric ton acid or 3 lb NO_x/ton acid). Union Carbide field test data taken at both the Hercules and Holston units shortly after startup indicated that the units were limiting emissions to no more than 0.1 lb NO_x/ton acid. Continuous monitoring data taken by the U. S. Army at the Holston unit for three days out of each month during the first six months of operation indicate NO_x emissions ranged from about 0.2 to 0.6 lb NO_x/ton acid. The data taken by Engineering-Science, Inc. at the Hercules unit 10 months after start up show an average emission range of 0.24 to 2.3 lb NO_x/ton acid, even after the sieve had been damaged by a back flow of nitric acid.

- The NO_x emissions from a molecular sieve control unit increase with increasing NO_x mass loading on the sieve. Inlet NO_x concentration to the sieve decreases as the ambient temperature decreases.

- The assumed 2-year sieve life with NO_x control at a guaranteed level of less than 50 ppm (0.75 lb NO_x/ton acid) has not been demonstrated in the field, although laboratory tests indicate that this sieve life can be achieved. The Holston unit will not achieve 2 years of operation until August, 1976, and the Hercules unit has to have the damaged sieve replaced so that it will take 2 more years for this unit to demonstrate acceptable sieve life. However, a six-month sieve life has been demonstrated on the Holston unit.

- Molecular sieve technology appears to be less costly than extended absorption but more costly than catalytic reduction. The former process is capable of reducing effluent NO_x concentrations to less than 50 ppm, while the latter two processes usually reduce the effluent NO_x concentrations to only 200 ppm. The shortage of natural gas probably means that molecular sieve adsorption is an economically competitive emission control technology. When the price of natural gas reaches \$2.4/1000 ft^3, the cost of catalytic reduction equals the cost of molecular sieve adsorption. Since the cost of the extended absorption process is very dependent upon individual acid plant characteristics, each plant will have to be evaluated separately.

It is recommended that the 2-year sieve life be demonstrated by continuing to monitor the NO_x emissions at the Holston unit periodically until 2 years of operation have elapsed. Also, the cause of improper adsorption in adsorber vessel B at the Holston unit should be determined.

REFERENCES

1. NATO Committee on the Challenge of Modern Society, "Air Pollution: Control Techniques for Nitrogen Oxide Emissions From Stationary Sources", PB-240-578, October, 1973.

2. U. S. Public Health Service, "Atmospheric Emissions from Nitric Acid Manufacturing Processes", PHS Publication 999-AP-27, 1966.

3. Boudreaux, M. L., "Additional Absorption Capacity Stems Nitric Acid Plant NO_x Pollution", Nitrogen, (91), 36-38 (September/October, 1974).

4. Sherwood, T. K. and Pigford, R. L., Absorption and Extraction, Second Edition, McGraw-Hill, New York (1952).

5. Streight, H. R. L., "Reduction of Oxides of Nitrogen in Vent Gases", Can. J. Chem. Eng., 36 (1), 3-11 (February, 1958).

6. Ringbakken, R., Lie, O. H., and Mejdell, G. T., "Urea As An Agent in the Destruction/Recovery of NO_x in Nitric Acid and Nitrophosphate Production", paper presented at ISMA Technical Conference, Prague (September, 1974).

7. Anonymous, "NO_x Abatement in Nitric Acid and Nitrophosphate Plants", Nitrogen, (93), 32-37 (January/February, 1975).

8. Breck, D. W., Zeolite Molecular Sieves, John Wiley & Sons, New York (1974).

9. Addison, W. E. and Barrer, R. M., "Sorption and Reactivity of Nitrous Oxide and Nitric Oxide in Crystalline and Amorphous Siliceous Sorbents", J. Chem. Soc., 1955, 757-769 (1955).

10. Sundaresan, B. B., Harding, C. I., May, F. P., and Hendrickson, E. R., "Adsorption of Nitrogen Oxides from Waste Gas", Environ. Sci. Technol., 1 (2), 151-156 (February, 1967).

11. Krasnyy, E. B., Musin, T. G., Piguzova, L. I., and Prokof'eva, E. N., "Nitrogen Oxide Adsorption Capabilities of Zeolites with High Silica Contents", Sov. Chem. Ind., (9), 52-54 (September, 1969).

12. Lewis, L. C., "Evaluation of Adsorbents for Purification of Noble Gases in Dissolver Off-Gas", U. S. Atomic Energy Commission Report IN-1402 (1970).

13. Joithe, W., Bell, A. T., and Lynn, S., "Removal and Recovery of NO_x from Nitric Acid Plant Tail Gas by Adsorption on Molecular Sieves", Ind. Eng. Chem. Process Des. Develop., 11 (3) 434-439 (1972).

REFERENCES
(Continued)

14. Holcombe, T. C., "Field Evaluation of Hercules PuraSiv N. Unit", PE Memo #39, Union Carbide Corporation, Tarrytown Technical Center, Tarrytown, N. Y. (October 25, 1974).

15. Forsten, I., Letter to E. Wooldridge, EPA Control Systems Laboratory from Dept. of the Army, Picatinny Arsenal, Dover, New Jersey (May 30, 1975).

16. Chehaske, J. T. and Greenberg, J. S., "Testing of a Molecular Sieve Used to Control NO_x Emissions from a Nitric Acid Plant", draft report prepared for EPA by Engineering-Science, Inc., McLean, Virginia (June, 1975).

17. Casetty, R., Union Carbide Corp., Tarrytown, New York, private communication to H. S. Rosenberg of Battelle-Columbus (June 23, 1975).

18. Study in progress for the American Petroleum Institute.

19. Peters, M. S. and Timmerhaus, K. D., Plant Design and Economics for Chemical Engineers, Second Edition, McGraw-Hill, New York (1968) pp 173-175.

20. Clapperton, J. A., PPG Industries, Pittsburgh, Pennsylvania, letter to M. Y. Anastas of Battelle-Columbus (February 28, 1975).

21. "Cost of Clean Air, 1975", report in progress by Battelle-Columbus.

22. Searles, R. A., "Cleaner Nitric Acid Plant Tail Gases", Nitrogen, (88), 38-42 (March/April, 1974).

23. "Grande Paroisse Absorption Process for NO_x Abatement", J. F. Pritchard & Company, Kansas City, Missouri (May, 1973).

APPENDIX A

DETAILED COST DATA

APPENDIX A

DETAILED COST DATA

This appendix presents some details related to the cost data presented in the text. Data are included for the PuraSiv N process, catalytic reduction, and extended absorption.

PuraSiv N Process

This section contains data obtained from Union Carbide on the investment and operating costs for the PuraSiv N process. The following data are included:

Figure A-1. PuraSiv N Cost vs Tail Gas Flow Rate
Table A-1. PuraSiv N Adsorbent Price Estimates Through 1975
Table A-2. PuraSiv N Utility Estimates.

These data were used in the cost estimates presented in this report, based on a tail gas flow rate of 78 scfm/tpd. The cost of the molecular sieve was taken as an O & M cost based on a yearly service contract, since this is the manner in which Union Carbide quotes this cost.

Catalytic Reduction

The capital cost for the catalytic reduction process as a function of plant size was taken from the Cost of Clean Air study.[21] Tables A-3, A-4, and A-5, originally presented by Searles,[22] provide backup data on the investment and operating costs.

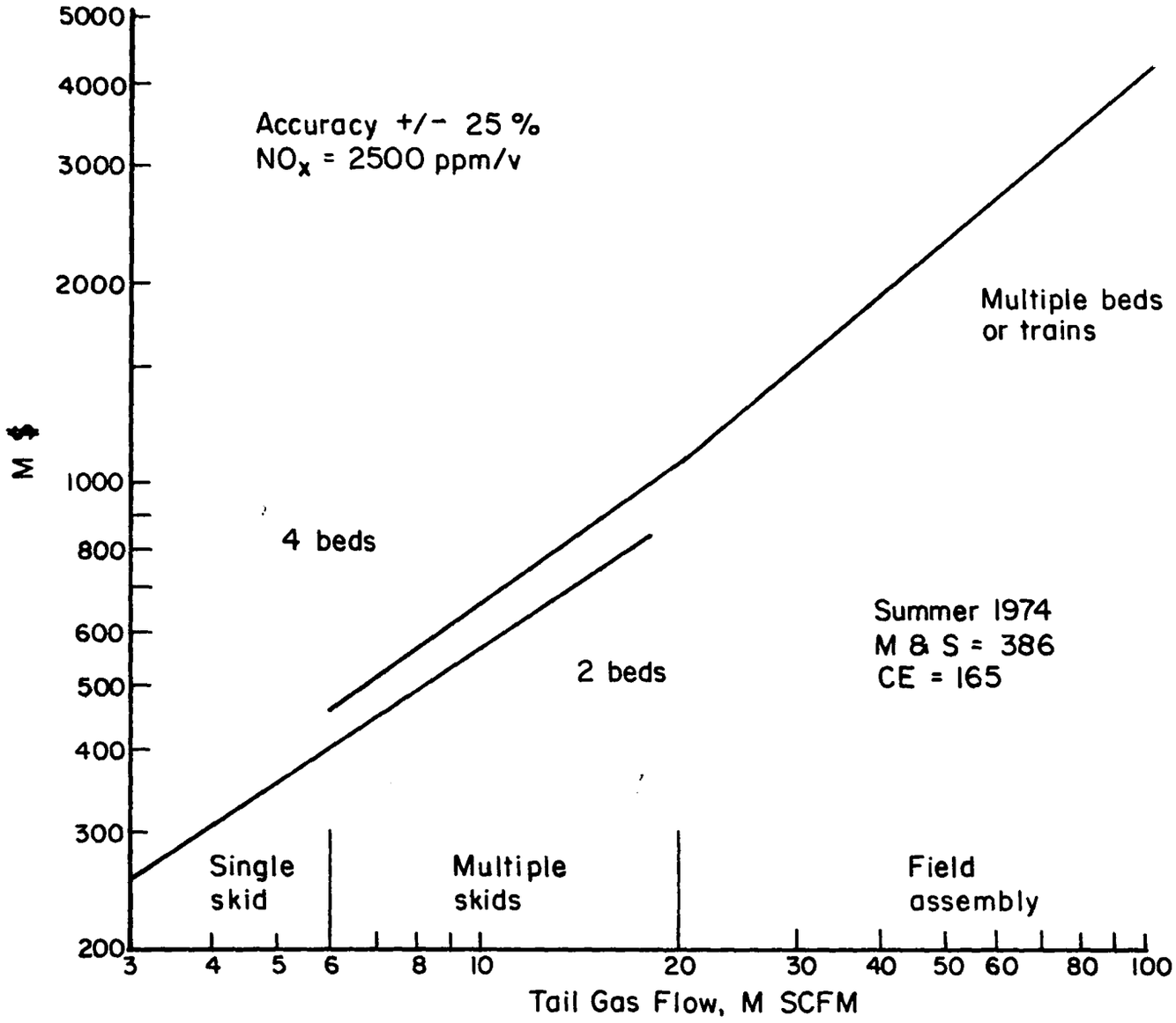

FIGURE A-1. PURASIV N COST VERSUS TAIL GAS FLOW RATE

TABLE A-1. PURASIV N ADSORBENT PRICE ESTIMATES THROUGH 1975

F = TAIL GAS FLOW RATE FROM CUSTOMER'S ABSORBER, MSCFM @ 60°F, 14.7 psia

A. CUSTOMER NEEDS 250 OR HIGHER ppmv GUARANTEED NO_x IN EFFLUENT

ppmv NO_x in Tail Gas	Outright Sale Price Due Upon Unit Acceptance 3-Year Pro-Rated Life Guarantee		Yearly Service Contract, First Payment Due Upon Unit Acceptance Contract Runs for 4 Years	
	2-Bed Type	4-Bed Type	2-Bed Type	4-Bed Type
1500	$4,000 F	$3,100 F	$1,460 F/Yr	$1,120 F/Yr
2500	$5,900 F	$4,300 F	$2,130 F/Yr	$1,600 F/Yr
3500	$7,200 F	$5,200 F	$2,680 F/Yr	$1,900 F/Yr

B. CUSTOMER NEEDS 50 ppmv GUARANTEED NO_x IN EFFLUENT

ppmv NO_x in Tail Gas	Outright Sale Price Due Upon Unit Acceptance 2-Year Pro-Rated Life Guarantee		Yearly Service Contract, First Payment Due Upon Unit Acceptance Contract Runs for 4 Years	
	2-Bed Type	4-Bed Type	2-Bed Type	4-Bed Type
1500	$4,000 F	$3,100 F	$2,090 F/Yr	$1,600 F/Yr
2500	$5,900 F	$4,300 F	$3,050 F/Yr	$2,300 F/Yr
3500	$7,200 F	$5,200 F	$3,830 F/Yr	$2,700 F/Yr

2-BED/4-BED FIRST PASS SELECTION GUIDELINE

ppmv NO_x in Tail Gas	F Less Than 7.5	F Between 7.5 and 20	F Greater Than 20
Below 2500	2-Bed	2-Bed	4-Bed
2500 - 3000	2-Bed	Toss-Up	4-Bed
More than 3000	4-Bed	4-Bed	4-Bed

TABLE A-2. PURASIV N UTILITY ESTIMATES*

F = MSCFM TAIL GAS @ 60°F, 14.7 psia

	AVERAGE USAGE**		
	Power KW	Cooling H_2O @ 15°F Rise, GPM	Heat Absorbed @ 100% Furnace Eff. MM BTU/DAY
2 Bed Unit	18.5 F	35 F	1.5 F
4 Bed Unit	17.5 F	32.5 F	1.35 F

* Tail Gas at 90 F and 90 psig used as Base Point. Lower temperatures and higher pressures will reduce the utility requirements.

** Peak (demand) usage figures are, of course, somewhat higher. The customer uses the average figures above for his operating cost economic studies, but he needs to know the demand figures to size utility lines, etc. Here are some guidelines:

Demand Power = 1.10 x Avg. Power
Demand Cooling H_2O = 1.0 x Avg. Cooling H_2O
Demand Absorbed Heat = 2 x Avg. Absorbed Heat

TABLE A-3. COST OF PRODUCING NITRIC ACID
(300 tons/day plant built in 1962)
(without NO_x abatement)

	Unit	Quantity	Cost/ Unit $	Cost/Ton Acid $
A. Raw material				
1. Ammonia	Tons	0.2998	35.00	10.49
B. Utility Consumption				
1. Cooling water	M. Gal.	34.000	0.02	0.68
2. Steam	Import M lb.	0.610	0.92	0.56
3. Electricity	kWh	6.000	0.01	0.06
C. Other Cost				
1. Maintenance	$			0.71
2. Depreciation	$			1.18
3. Operating labor	$			0.86
				$14.54

Basic

1. Investment	$1,800,000
2. Production	102,000 tons/yr
3. Maintenance	$72,000
4. Depreciation	15 years
5. Operating labor	8,760 man-hours/yr at $10.00/hr

Source: Reference 22

TABLE A-4. COST OF PRODUCING NITRIC ACID

(300 ton/day Plant Built in 1962)
(NO_x Abatement Added 1972)

	Unit	Quantity	Cost/ Unit, $	Cost/Ton Acid, $
A. Raw Material & Catalyst				
1. Ammonia	Tons	0.2998	35	10.49
2. Abatement catalyst	$			0.15
B. Utility Consumption				
1. Cooling water	M gal	34.000	0.02	0.68
2. Steam	Export M lb	1.090	0.92	(1.00)
3. Electricity	kWh	6.000	0.01	0.06
4. Fuel	MM Btu	1.75	0.65	1.14
C. Other Cost				
1. Maintenance	$			0.88
2. Depreciation	$			1.47
3. Operating labor	$			14.75
Basic				
1. Investment	$2,200,000			
2. Production	100,000 ton/yr			
3. Maintenance	$88,000			
4. Depreciation	15 years			
5. Operating labor	8,760 man-hours/yr at $10/hr			

Source: Reference 22.

TABLE A-5. COST OF PRODUCING NITRIC ACID

(300 ton/day Plant Built in 1972)
(NO_x Abatement Included)

	Unit	Quantity	Cost/ Unit, $	Cost/Ton Acid, $
A. Raw Material & Catalyst				
1. Ammonia	Tons	0.290	35	10.15
2. Abatement catalyst	$			0.15
B. Utility Consumption				
1. Cooling water	M gal	20.5	0.02	0.41
2. Steam	Export M lb	2.430	0.92	(2.24)
3. Electricity	kWh	3.00	0.01	0.03
4. Fuel	mm Btu	1.75	0.65	1.14
C. Other Cost				
1. Maintenance	$			0.49
2. Depreciation	$			1.31
3. Operating labor	$			0.20
				$11.64
Basic				
1. Investment		$2,000,000		
2. Production		102,000 ton/yr		
3. Maintenance		$50,000		
4. Depreciation		15 years		
5. Operating labor		2,000 man-hours/yr at $10/hr		

Source: Reference 22.

The cost of natural gas at which molecular sieve adsorption becomes economically competitive with catalytic reduction was calculated by the following method:

100 ton/day plant

$$K_{total}(\text{PuraSiv N}) = K_{total}\ (\text{Catalytic Reduction})$$

$$\text{Catalytic Reduction: } K_{total} = K_I + K_{O+M}$$

$$K_{O+M} = K_{total} - K_I$$

$$K_{O+M} = \$1{,}013{,}600 - 255{,}300$$

$$K_{O+M} = \$758{,}300$$

$$O + M = K_{O+M}/6.67$$

$$O + M = \$113{,}700$$

$$O + M - \text{cost of natural gas} = \$32{,}300 - 84{,}000 = -\$51{,}700$$

$$\text{cost of natural gas} = \$113{,}700 + 51{,}700 = \$165{,}400$$

$$\frac{\$1.2}{1000\ ft^3} \times \frac{\$165{,}400}{\$\ 84{,}000} = \frac{\$2.4}{1000\ ft^3}$$

A similar analysis for the 1,000 ton/day plant also yielded a natural gas cost of $\$2.4/1000\ ft^3$.

Extended Absorption

The data included in Figure A-2 and Table A-6 were provided by J. F. Pritchard and Company. However, the investment costs are out of date and updated costs were supplied by Mr. L. Boudreaux, Senior Process Engineer, J. F. Pritchard and Company.

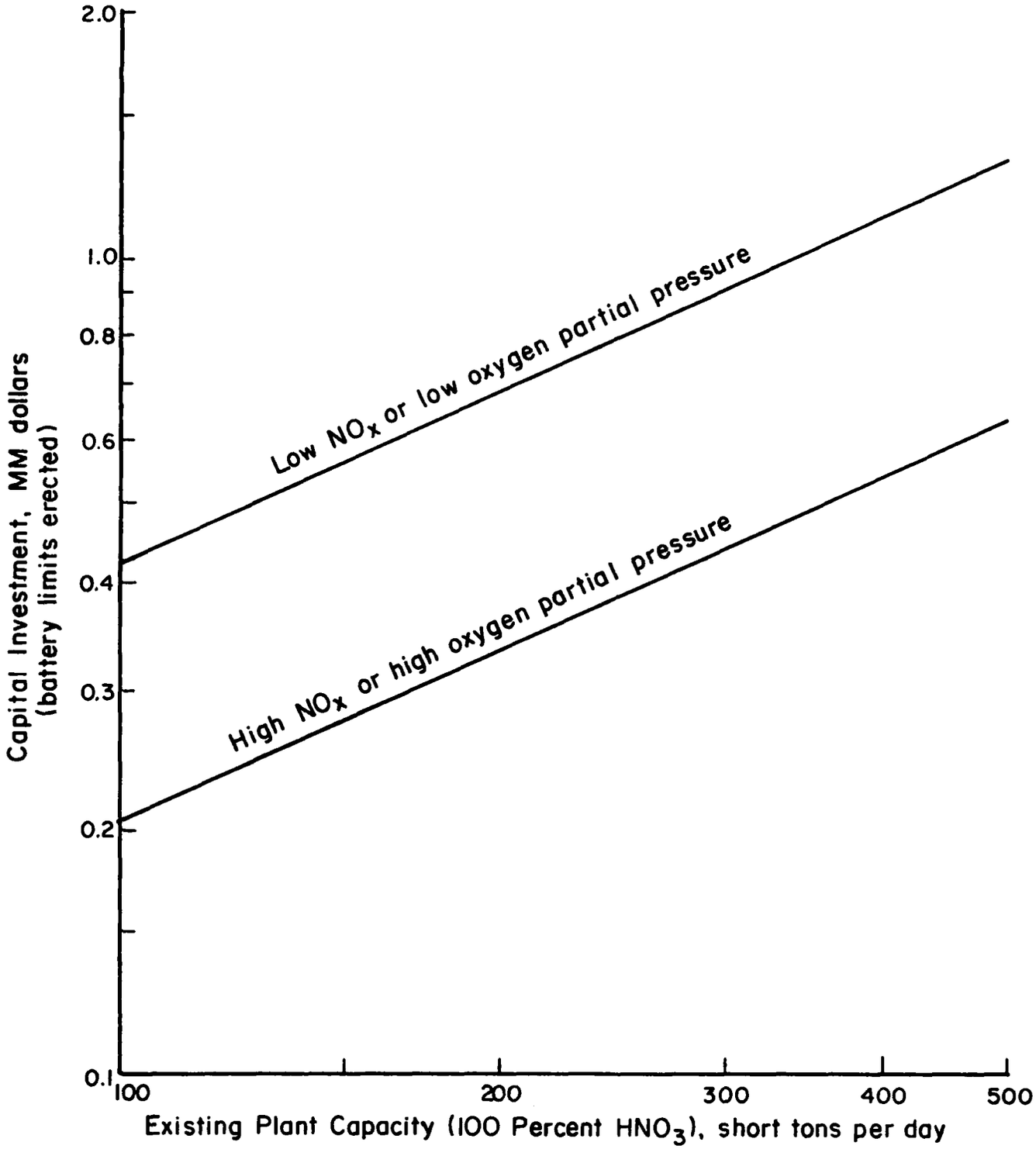

FIGURE A-2. CAPITAL INVESTMENT VERSUS EXISTING PLANT CAPACITY GRANDE PAROISSE EXTENDED ABSORPTION PROCESS FOR NO_x ABATEMENT

TABLE A-6. ECONOMICS OF TYPICAL PROCESS APPLICATIONS GRANDE PAROISSE ABSORPTION PROCESS FOR NO_x ABATEMENT

	Plant A	Plant B	Plant C
I. PROCESS CONDITIONS			
Existing Capacity, Tons/Day	120	230	350
N(O)x Emission, ppm (v)	1500	2500	5000
Tail Gas Pressure, PSIG	100	90	110
Tail Gas Temperature, °F	60	70	80
Residual Oxygen, Mol. %	2.5	2.5	2.8
Design Emission Level, ppm(v) N(O)x	400	400	400
II. UTILITIES			
Cooling Water, GPM	50	120	330
Electric Power, KW	6	8	10
Instrument Air, SCFM	2	2	2
Pressure Loss, PSI	5	6	8
III. INVESTMENT			
Order-of-Magnitude (Including Royalty)	$300,000	$500,000	$850,000
IV. YEARLY OPERATING COST *			
1. Operating Labor	From Existing Acid Plant		
2. Maintenance Material & Labor @ 1.5% of Investment	$ 4,500	$ 7,500	$ 12,750
3. Depreciation, Taxes, Insurance @ 12.5% of Investment	37,500	62,500	106,250
4. Electricity @ 10 mils/Kwh	497	663	828
5. Cooling Water (Circ.) @ 2¢/1000 Gal.	497	1,192	3,279
Total $/Yr.	$ 42,994	$ 71,855	$123,107
* 345 Days/Yr.			
Incremental HNO_3 Recovered - T/Yr.	414	1,484	5,451
Total Tons HNO_3 - Tons/Yr.	41,814	80,834	126,201
Operating Cost - $/T Total Acid	$ 1.03	$ 0.89	$ 0.98

TECHNICAL REPORT DATA
(Please read Instructions on the reverse before completing)

1. REPORT NO. EPA-600/2-76-015	2.	3. RECIPIENT'S ACCESSION NO.
4. TITLE AND SUBTITLE Molecular Sieve NO_x Control Process in Nitric Acid Plants		5. REPORT DATE January 1976
		6. PERFORMING ORGANIZATION CODE
7. AUTHOR(S) Harvey S. Rosenberg		8. PERFORMING ORGANIZATION REPORT NO.
9. PERFORMING ORGANIZATION NAME AND ADDRESS Battelle-Columbus Laboratories 505 King Avenue Columbus, Ohio 43201		10. PROGRAM ELEMENT NO. 1AB014; ROAP 21ADH-008
		11. CONTRACT/GRANT NO. 68-02-1323, Task 17
12. SPONSORING AGENCY NAME AND ADDRESS EPA, Office of Research and Development Industrial Environmental Research Laboratory Research Triangle Park, NC 27711		13. TYPE OF REPORT AND PERIOD COVERED Task Final; 10/74-11/75
		14. SPONSORING AGENCY CODE
15. SUPPLEMENTARY NOTES		

16. ABSTRACT The report gives results of an engineering analysis of the applicability of molecular sieve technology to the control of NOx emissions from nitric acid plants. Field test data from a plant using this technology show that, after 6 months of operation, the plant still controls NOx emissions to well within the New Source Performance Standard (NSPS) (1.5 kg of NOx/metric ton of acid; equivalent to about 200 ppm NOx in the tail gas). Field test data from a second plant, 10 months after start-up, show that NOx emissions are below the NSPS, even though the sieve had been accidentally damaged. The process appears able to achieve an average effluent NOx concentration of 50 ppm, based on tests at the former plant; however, this concentration was not achieved during the tests at the latter plant because of the damaged sieve. Although a 2-year sieve life has not been demonstrated, there is no reason to believe it cannot be achieved, and it appears that molecular sieve technology is technically feasible. The economic feasibility of molecular sieve technology for this application was assessed by comparing this technology with the catalytic reduction and extended absorption processes, both of which usually limit effluent NOx concentration to only about 200 ppm. The capitalized cost for the molecular sieve process is higher than for catalytic reduction and lower than for extended absorption.

17. KEY WORDS AND DOCUMENT ANALYSIS

a. DESCRIPTORS		b. IDENTIFIERS/OPEN ENDED TERMS	c. COSATI Field/Group	
Air Pollution	Cost Analysis	Air Pollution Control	13B	14A
Absorbers (Materials)	Evaluation	Stationary Sources	11G	
Nitrogen Oxides		Molecular Sieves	07B	
Industrial Plants		Nitric Acid Plants		
Nitric Acid		Catalytic Reduction		
Catalysis		Extended Absorption	07D	

18. DISTRIBUTION STATEMENT Unlimited	19. SECURITY CLASS (This Report) Unclassified	21. NO. OF PAGES 75
	20. SECURITY CLASS (This page) Unclassified	22. PRICE

EPA Form 2220-1 (9-73)