EPA-600/2-76-048a
March 1976

Environmental Protection Technology Series

MOLECULAR SIEVE TESTS FOR CONTROL OF NO_x EMISSIONS FROM A NITRIC ACID PLANT

Volume I

Industrial Environmental Research Laboratory
Office of Research and Development
U.S. Environmental Protection Agency
Research Triangle Park, North Carolina 27711

RESEARCH REPORTING SERIES

Research reports of the Office of Research and Development, U.S. Environmental Protection Agency, have been grouped into five series. These five broad categories were established to facilitate further development and application of environmental technology. Elimination of traditional grouping was consciously planned to foster technology transfer and a maximum interface in related fields. The five series are:

1. Environmental Health Effects Research
2. Environmental Protection Technology
3. Ecological Research
4. Environmental Monitoring
5. Socioeconomic Environmental Studies

This report has been assigned to the ENVIRONMENTAL PROTECTION TECHNOLOGY series. This series describes research performed to develop and demonstrate instrumentation, equipment, and methodology to repair or prevent environmental degradation from point and non-point sources of pollution. This work provides the new or improved technology required for the control and treatment of pollution sources to meet environmental quality standards.

EPA REVIEW NOTICE

This report has been reviewed by the U.S. Environmental Protection Agency, and approved for publication. Approval does not signify that the contents necessarily reflect the views and policy of the Agency, nor does mention of trade names or commercial products constitute endorsement or recommendation for use.

This document is available to the public through the National Technical Information Service, Springfield, Virginia 22161.

EPA-600/2-76-048a
March 1976

MOLECULAR SIEVE TESTS FOR CONTROL OF NO_x EMISSIONS FROM A NITRIC ACID PLANT

VOLUME I

by

John T. Chehaske and Jonathan S. Greenberg

Engineering-Science, Inc.
7903 Westpark Drive
McLean, Virginia 22101

Contract No. 68-02-1406, Task 2
ROAP No. 21AFA-106
Program Element No. 1AB015.

EPA Project Officer: E. J. Wooldridge

Industrial Environmental Research Laboratory
Office of Energy, Minerals, and Industry
Research Triangle Park, NC 27711

Prepared for

U.S. ENVIRONMENTAL PROTECTION AGENCY
Office of Research and Development
Washington, DC 20460

ABSTRACT

Performance testing for NO_x emission control was conducted by Engineering-Science, Inc. on the Union Carbide PuraSiv N* unit currently controlling emissions from the tail gas stream of the ammonia oxidation nitric acid production facility of Hercules Inc. in Bessemer, Alabama.

Measurements of NO_2/NO_x concentrations in the PuraSiv N inlet and outlet streams were performed during 11 individual four-hour adsorption cycles using continuous photometric analyzers. The inlet and outlet streams were sampled simultaneously. NO_x concentrations were also measured at the test sites using the EPA Method 7 reference procedure in order to provide comparative data. Total NO_x mass loading to the sieve was variable from cycle to cycle, ranging from 63,370 to 251,800 grams, reported as NO_2. The average efficiency of the control unit for the cycles tested ranged from 98.68 to 95.92%. The integrated average concentrations of NO_x emitted over the complete cycles ranged from 17 to 154 ppm with the average concentration for all eleven tests being 105 ppm.

This report was submitted in fulfillment of Contract Number 68-02-1406, Task Number 2 by Engineering-Science, Inc. under the sponsorship of the Environmental Protection Agency. Work was completed as of December 1975.

---

*Registered Trademark of the Union Carbide Corporation.

CONTENTS

		Page
Abstract		iii
List of Figures		v
List of Tables		vi
List of Abbreviations		vii
Sections		
I	Introduction	1
II	Summary	3
III	Process Description and Operation	6
IV	Sampling and Analytical Procedures	14
V	Discussion of Results	32
	Reference List	60

FIGURES

No.		Page
III-1	Schematic Diagram of Ammonia Oxidation Process at Hercules Bessemer Plant	7
III-2	Flow Diagram for PuraSiv-N Molecular Sieve (shown with A adsorbing and B regenerating)	9
IV-1	Schematic Diagram of Sampling Train Used on Inlet Test Sites HV-12 and HV-23	17
IV-2	Schematic Diagram of Sampling Train Used on Outlet Test Site HV-13	19
V-1	Instantaneous NO_x Mass Loading and Control Efficiency Test--2 (1010 to 1408 3/6/75)	37
V-2	Instantaneous NO_x Mass Loading and Control Efficiency Test--6 (1400 to 1754 3/14/75)	38
V-3	Instantaneous NO_x Mass Loading and Control Efficience Test--11 (0711 to 1114 3/14/75)	39
V-4	Instantaneous Inlet and Outlet NO_x Concentrations and Integrated Outlet NO_x Concentration Test--2	41
V-5	Instantaneous Inlet and Outlet NO_x Concentrations and Integrated Outlet NO_x Concentration Test--6	42
V-6	Instantaneous Inlet and Outlet NO_x Concentrations and Integrated Outlet NO_x Concentration Test--11	43
V-7	Total Mass Loading Versus Average Control Efficiency for Tests 1-11	47

TABLES

NO.		Page
III-1	Nitric Acid Production Rates During Tests	12
IV-1	Process Conditions Monitored	23
IV-2	Calibration Gas Analyses	27
V-1	Summary of Calculated NO_x Mass Flow Rates and Control Efficiencies for Instantaneous Flow and Concentration Data for Test-11	33
V-2	Summary of NO_x Mass Loading, Average Control Efficiency and Average Concentration of NO_x Emitted Test-11	44
V-3	Cumulative Mass Loading, Average Control Efficiency and Average Concentration of NO_x Emitted	45
V-4	Summary of Performance of PuraSiv-N Molecular Sieve	46
V-5	Fuel Consumption of Regeneration Heater	49
V-6	Summary of Electrical Power Usage of PuraSiv N System During Tests 1-11	49
V-7	Comparison of Inlet (HV-12) NO_x Concentrations Determined by Photometric Analyzer and EPA Method No. 7	51
V-8	Comparison of Inlet (HV-23) NO_x Concentrations Determined by Photometric Analyzer and EPA Method No. 7	53
V-9	Comparison of Inlet (HV-13) NO_x Concentrations Determined by Photometric Analyzer and EPA Method No. 7	54
V-10	Results of EPA Method 7 Analysis of Calibration Gases	59

LIST OF ABBREVIATIONS

Symbol	Meaning
^{o}C	Degrees Centigrade
cfm	Cubic Feet per Minute
^{o}F	Degrees Fahrenheit
m^3/min.	Cubic Meters per Minute
N/m^2	Newtons per Square Meter
$\underline{N}m^3$/min.	Normal Cubic Meters per Minute (at standard conditions of 15.56^{o}C (60°F) and 760 milimeters of mercury pressure)
ppm	Parts per Million by Volume
psig	Pounds per Square Inch, Gauge
scfm	Standard Cubic Feet per Minute (at standard conditions of 15.56^{o}C (60°F) and 760 milimeters of mercury pressure)

SECTION I

INTRODUCTION

Engineering-Science, Inc. (ES) was contracted by the Environmental Protection Agency, Office of Research and Development, Control Systems Laboratory, for the purpose of testing the proprietary Union Carbide, PuraSiv N Molecular Sieve Process designed to control NO_x emissions. Tests were performed on a PuraSiv N unit installed at the Hercules, Inc. nitric acid plant in Bessemer, Alabama. The plant utilizes the pressure ammonia oxidation process. The overall objectives of this contract were to determine the effectiveness of the PuraSiv N system in controlling NO_x emissions from the nitric acid plant tail gas stream, and to determine the unit's utility usage, thus providing a data base for subsequent technical/economic evaluations of the PuraSiv N system. A subject of major consideration in this study was whether the unit tested met Union Carbide claims that the PuraSiv N system limits NO_x emissions to an average of 50 ppm.

The unit selected for evaluation was installed at the plant in May of 1973 and was utilized periodically during the day shift until the Summer of 1974, at which time 24-hour operation was begun. The unit was not operated from December, 1974, to February, 1975, due to a temporary plant shutdown. The unavailability of an operating log for the unit from the time of installation made it impossible to determine the exact number of hours the unit had been used.

The tail gas stream from the nitric acid plant absorption tower passes through the PuraSiv N unit, first undergoing cooling and demisting and then encountering an adsorption bed which removes the water vapor and NO_x contained in the stream. The unit contains two separate but identical adsorbers which are utilized alternately. While one bed is operating in the adsorption mode, the other bed is being regenerated. Each adsorption/regeneration cycle is timed to last four hours.

The NO_x sampling sites were located at the inlet and outlet of the adsorption beds. Two distinct inlet sites were tested at different times during the study. One inlet site was located before the feed chiller and demister at the PuraSiv N/plant interface (known as the "battery limits"). The other inlet site was located between the demister and the adsorption beds. A total of 11 four-hour cycles were tested during the period February 5 through 14, 1975. The testing consisted of simultaneously measuring the inlet and outlet NO_2/NO_x concentrations using continuous photometric analyzers. These continuous measurements were supplemented by NO_x determinations using grab samples taken and analyzed in accordance with the EPA Method 7 procedure, "Determination of Nitrogen Oxide Emissions From Stationary Sources" as located at 40 CFR 60.85 dated July 1, 1974. A total of 117 grab samples were taken during the 11 cycles tested. All field testing and subsequent laboratory analyses were performed by personnel of ES and the subcontractor, Commonwealth Laboratory, Incorporated.

This report is published in two volumes. Volume I contains the body of the report, while Volume II contains the appendices.

SECTION II

SUMMARY

The overall objectives of the testing program were to measure the efficiency and utility usage of the proprietary PuraSiv N molecular sieve system for control and recovery of NO_x emissions from the tail gas stream of a nitric acid plant. Testing was conducted on a system installed at the Hercules, Inc. nitric acid plant in Bessemer, Alabama. Successful completion of the field testing program provided simultaneous measurements of inlet and outlet NO_2/NO_x concentrations during 11 separate four-hour adsorption cycles, and measurements of the system's electrical, water and fuel usage. The analytical technique used to obtain the NO_x measurements for evaluation of the molecular sieves performance was a continuous photometric method. Measurements were also made using the EPA Method 7 procedure in order to provide a comparative data base.

Analysis of the field test data revealed that the highest instantaneous control efficiency measured during any of the cycles was 99.53%, occurring at the beginning of an adsorption cycle during a period of slowed production. At the time, the inlet mass loading was approximately 25% of the loading which usually occurs during normal production. It was during this cycle that the lowest instantaneous outlet concentration was measured, 6 ppm, occurring after the inlet mass loading had dropped to about 20% of normal. The lowest instantaneous efficiency measured, excluding an upset condition, was 91.88%, occurring at the end of an adsorption cycle when the plant had been operating at 95% capacity. It was at this time that the highest instantaneous outlet concentration, 291 ppm, was measured.

Average control efficiencies for individual four-hour cycles ranged from 95.92% to 98.68%. The highest average control efficiency occurred during the cycle in which acid production and sieve inlet mass loadings were at their lowest observed levels. The average concentration of NO_x emitted during this cycle was 17 ppm. The highest average concentration of NO_x emitted during a cycle was 154 ppm. During the 11 cycles tested, the average control efficiency was generally inversely proportional to the total NO_x mass loading occurring during the cycle. A plot of the average control efficiency versus the total mass loading for each test cycle shows that the lowest efficiencies occurred during the cycles with the greatest mass loading. The plot and further discussion are presented in Section V of this volume.

For the 11 tests performed, the integrated average outlet NO_x concentrations for the complete adsorption/regeneration cycles ranged from 17 to 154 ppm. The average for the 11 cycles tested was 105 ppm. The cycle for which the integrated average outlet concentration was 17 ppm was the only cycle where the average outlet concentration remained below 50 ppm, the level claimed by Union Carbide as the maximum integrated outlet NO_x concentration which is emitted over a cycle when the unit is operated at design rate.

During all the cycles tested the instantaneous control efficiency reached a maximum value within the first hour of the cycle and then gradually decreased during the remainder of the cycle. All cycles except one exhibited a temporary decrease in instantaneous efficiency during the first 30 minutes of the adsorption cycle. The exact cause of the temporary decrease was undetermined.

Electrical power usage by the system was greatly affected by the operation of the refrigeration unit which supplies cooled brine to the PuraSiv System. During some of the test cycles the refrigeration unit cycled on and off, because cooler ambient temperatures placed less load on the

unit. When the refrigeration unit was off, electrical power usage by the process was reduced by approximately 50%. The average electrical power usage for the four-hour test cycles in which the refrigeration unit operated continuously was 236.6 kilowatt hours.

Treated water usage during the cycles average 314.5 liters per minute. Fuel oil usage by the regeneration heater averaged 38 liters per cycle.

SECTION III

PROCESS DESCRIPTION AND OPERATION

The Hercules Plant began producing nitric acid by the ammonia oxidation process in 1929. Since then various portions of the plant have been rebuilt and/or replaced. The last major revisions occurred in 1966 when the acid absorption tower was replaced by a larger unit, and in 1973 when the PuraSiv N Process was added for NO_x removal and recovery. Current production capacity is 59 metric tons per day (130,000 pounds).

Figure III-1 illustrates the pressure process for the production of nitric acid which is utilized at the Hercules Plant. In the process, the PuraSiv N system is located after the absorption tower, between the entrainment separator and the reheater.

In the process, ammonia (NH_3) is first oxidized to nitric oxide (NO) and then to nitrogen dioxide (NO_2). The nitrogen dioxide is absorbed in water to produce nitric acid (HNO_3). Oxidation of the ammonia to nitric oxide is accomplished by passing a preheated mixture of 90 percent air and 10 percent ammonia by volume through a catalytic reactor at a pressure of about 7.72×10^5 N/m^2 (112 psig) and a temperature of 899°C (1650°F). The catalyst consists of a fine platinum/rhodium wire gauze. The reaction is highly exothermic, and goes to about 95% completion. The compounds leaving the reactor (nitric oxide, oxygen, nitrogen and water vapor) are passed through heat exchangers which cool the gases and promote the further oxidation of nitric oxide to nitrogen dioxide and its dimer dinitrogen tetroxide (N_2O_4). The recovered heat is used to preheat reaction air and reheat the plant's tail gas stream for power recovery.

FIGURE III-1. SCHEMATIC DIAGRAM OF AMMONIA OXIDATION PROCESS AT HERCULES BESSEMER PLANT

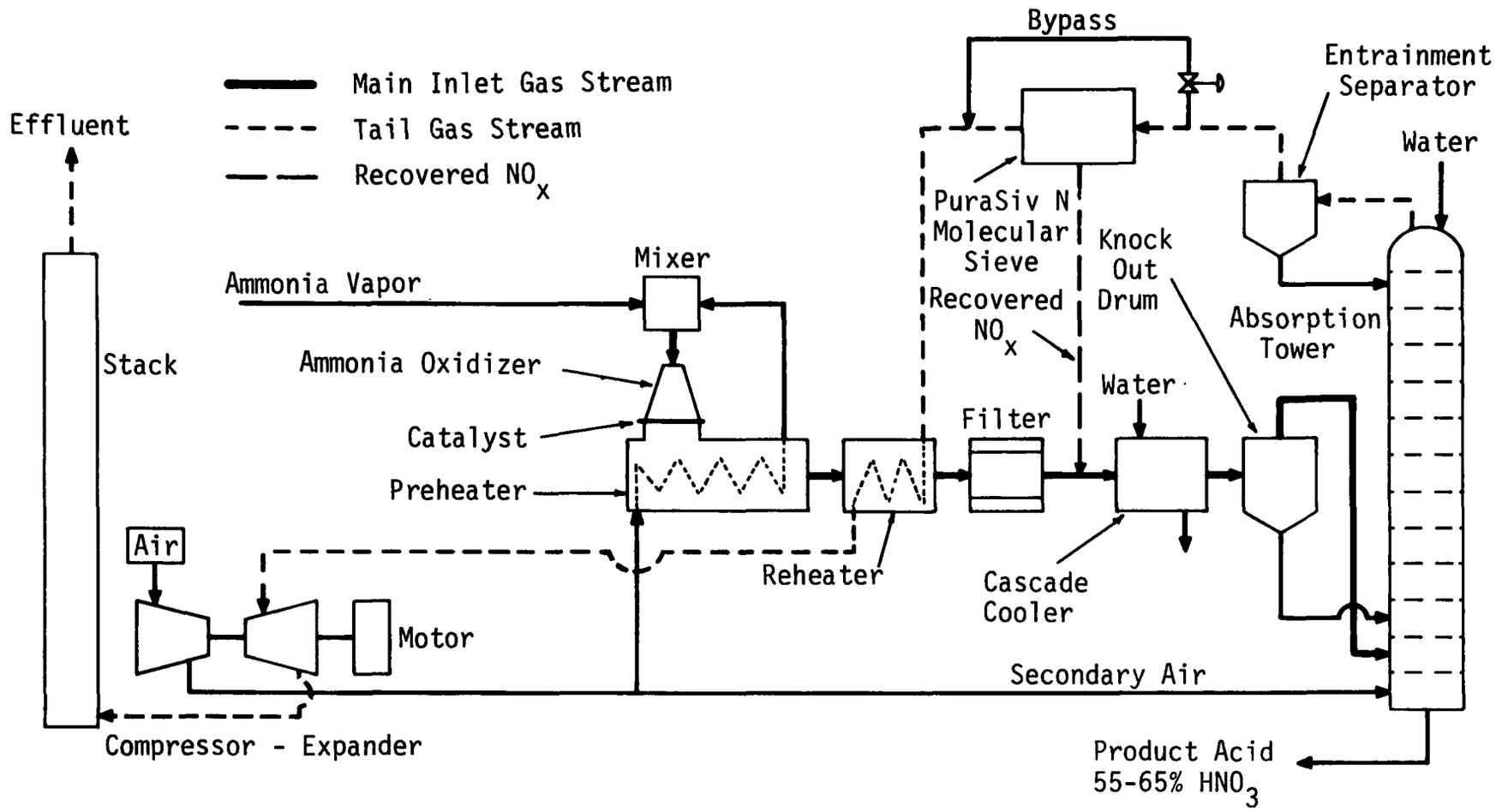

The product stream passes through a cascade cooler (water cooled heat exchanger) which cools the stream further before entering the absorption tower. By this time a portion of the NO_2 which has formed has reacted with condensed water vapor in the stream and produced a solution of nitric acid and nitric acid mist. The nitric acid is separated from the product stream by a knock out drum and the gas stream enters the base of the absorption tower. Water is introduced at the top of the absorption tower and secondary air at the bottom. The secondary air provides the additional oxygen needed for the formation of nitric acid. The absorption tower contains bubble cap trays which provide countercurrent contact between the falling aqueous solution and the rising gas stream. The product acid leaving the bottom of the tower has a concentration in the range of 55 to 65%.

The gas stream leaving the top of the absorption tower passes through an entrainment separator which removes entrained acid droplets, and then enters the PuraSiv N molecular sieve control system. A sieve bypass line is located between the entrainment separator and the reheater. During the operation of the sieve, the bypass valve is normally closed, but is set to open automatically when the flow through the sieve exceeds 161.4 $\underline{N}m^3$/min (5700 scfm). The gas stream before entering the sieve has a pressure of about 6.21×10^5 N/m^2 (90psig) and a temperature of about 32°C (90°F). The approximate composition of the stream is 3% oxygen, 6000 ppm H_2O and 3000 ppm NO_x, with the balance nitrogen.

Figure III-2 illustrates a simplified flow diagram for the PuraSiv N system. The major components of the system are the feed chiller, mist eliminator, two molecular sieve adsorption beds, regeneration compressor, regeneration furnace, and regeneration coolers.

Upon entering the PuraSiv N System the NO_x laden tail gas stream, saturated with water vapor and acid mist, first passes through the feed chiller and demister. Here portions of the water and NO_x

FIGURE III-2. FLOW DIAGRAM FOR PURASIV-N MOLECULAR SIEVE (SHOWN WITH A ADSORBING AND B REGENERATING)

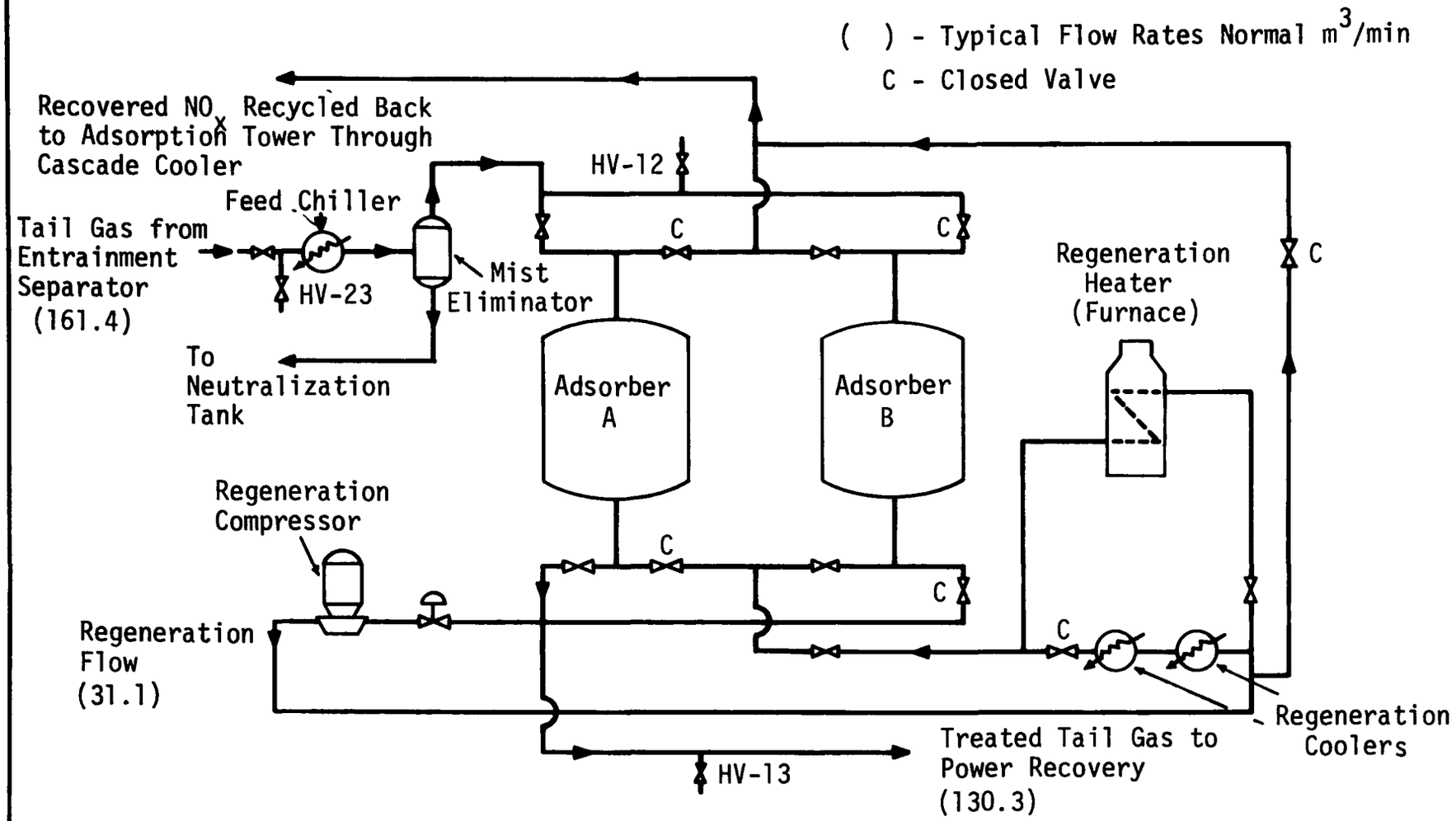

vapors as well as some of the existing acid mist are removed. Following the mist eliminator, the gas stream enters the top of one of the two molecular sieve beds and passes through a moisture removing layer. In the bed, residual NO is catalytically converted to NO_2 in the presence of the 3% oxygen contained in the gas stream. The NO_2 and N_2O_4 are then adsorbed by the bed molecular sieve material.

After passing through the adsorption bed the treated tail gas stream is split. One portion of the stream is diverted for regeneration of the second bed and the remainder is piped back to the plant for reheating and power recovery before it is discharged.

The two molecular sieve beds alternate between adsorption and regeneration on a timed cycle. The tail gas is passed through one bed, while the other bed is being regenerated. At the end of the cycle the regenerated bed is placed in the adsorption mode and the first bed begins regeneration. The cycle length is designed such that the adsorption capacity of the adsorbing bed is not exceeded before the end of the cycle. If the bed is subjected to total NO_x loadings in excess of the adsorption capacity, breakthrough will occur prior to the end of the cycle. At the Hercules Plant the cycle was programmed to last four hours. The design flow rate for the system was 161.4 $\underline{N}m^3$/min (5700 scfm) at an average NO_x concentration of 3300 ppm.

Regeneration of the second bed continues for the full four-hour cycle and consists of two main stages, heating and cooling. Approximately 31.1 $\underline{N}m^3$/min (1100 scfm) of the treated tail gas stream is diverted for the regeneration process and boosted to 8.27×10^5 N/m^2 (120 psig) by a compressor to provide sufficient pressure needed for recycling. During the heating portion of the cycle the regeneration gas is heated by an oil-fired furnace to approximately 220°C after which it passes through the bed from the bottom upward, removing the adsorbed NO_2 from the sieves. The

regeneration gas containing the desorbed NO_2 is returned to the acid plant absorption tower via the cascade cooler for recycling of the recovered NO_2. The heating portion of the regeneration cycle lasts approximately two hours, after which the furnace is shut off and the regeneration gas is diverted through two heat exchangers where it is cooled to approximately 7°C (45°F). The stream is passed through the bed in order to cool it before it is switched back to the adsorption mode.

Refrigerated brine is used in the feed chiller and the second of the two regeneration coolers. A closed loop brine system is furnished as an integral part of the PuraSiv N package. The recirculating brine is cooled by a refrigeration unit. The refrigeration unit accounts for nearly half of the total electrical power consumed by the PuraSiv N system. The balance of the electrical power is consumed by the regeneration compressor, the combustion air blower and other miscellaneous electrical equipment associated with the system.

Treated cooling water is used in the brine refrigeration unit compressor, the regeneration compressor, and the first regeneration cooler. This water is not recirculated and comes from an external supply. The water is essentially at ambient temperature.

Although plant personnel do not record hourly nitric acid production rates per se, process data is recorded which permits the estimation of the hourly production rates. Monthly yield checks are performed at the plant to verify yield estimates. Prior yield checks indicate the plant produces 0.91 metric tons of nitric acid per day per 2.8 $\underline{N}m^3$/min of feed air flow (1 ton per day per 100 scfm). The acid production rate estimates contained in Table III-1 were calculated from feed air flow rates read from process instrument charts using this correlation. The production rates estimate the tons of acid produced during each hour of testing. There were times during the testing when the sieve bypass line

Table III-1. NITRIC ACID PRODUCTION RATES DURING TESTS

Metric Tons/Hour

TIME	3/5	3/6	3/7	3/11	3/12	3/13	3/14
0700-0800							2.4
0800-0900			2[b]				2.3
0900-1000			2.1				2.3
1000-1100		2.3	1.6[c]		1.0	1.0	2.3
1100-1200		2.3	2.1		1.0	1.4[f,g]	2.3
1200-1300		2.3	2.1		1.0	2.2	
1300-1400		2.3	2.1		1.2[e]	2.1	
1400-1500	2.2	2.2	2.1	1.0	1.8	2.3[h]	
1500-1600	2.2	2.2	2.1	1.5[d]	1.6	2.2	
1600-1700	2.2	2.2	2.1	1.7	1.6	2.3	
1700-1800	2.2	1[a]	2.1	1.7	1.6	2.3	
1800-1900	2.2	2.0		1.7	1.6	2.3	
1900-2000					1.6	2.3	

(a) Upset caused by failure of XRD at 1709
(b) 37.9 m^3/min compressor put on line at 0845
(c) Upset caused by failure of 37.9 m^3/min compressor at 1000
(d) 17.0 m^3/min compressor put on line at 1530
(e) 17.0 m^3/min compressor put on line at 1345
(f) 37.9 m^3/min compressor put on line at 1130
(g) Upset caused by failure of XRD at 1133
(h) 17.0 m^3/min compressor put on line at 1355

was opened due both to upset conditions and to tail gas flow rates in excess of the bypass control valve set point. The plant has no means of measuring the quantity of tail gas bypassing the sieve system. For this reason the acid production data is not necessarily indicative of the relative load delivered to the control system.

The acid production rates experienced during the testing program were quite variable, primarily due to variable air compressor operation. During normal operation the plant uses four compressors to supply the reaction air needed for the process. One large compressor, an Ingersoll Rand PRE rated at 76.2 m^3/min (2690 cfm), and two smaller compressors, an Ingersoll Rand XLE and a Chicago Pneumatic rated at 37.9 m^3/min (1340 cfm) and 17.0 m^3/min (600 cfm) respectively, supply approximately 60% of the reaction air. These three units are powered by electric motors. After plant start-up, the XRD (reciprocating expander) power recovery unit is used to supply the remaining 40% of the air requirements.

There were several reasons for the compressors going on and off line. A minor mechanical problem with the 37.9 m^3/min compressor during test 3 caused a short-term reduction in the production rate. A major mechanical problem with the 37.9 m^3/min compressor resulted in decreased production rates during tests 6, 7, 8 and 9. A fluctuating requirement for compressed air elsewhere in the plant resulted in the 17.0 m^3/min unit being placed on and off line during tests 6, 7, and 9. The net result was that during the testing program, production rates ranged from 40 to 100% of nominal plant capacity. Also, during test number 8 problems with the regeneration heater caused a delay in the regeneration of bed A, resulting in the extension of the adsorption cycle for an additional 47 minutes.

SECTION IV

SAMPLING AND ANALYTICAL PROCEDURES

In order to provide the data base needed to evaluate the efficiency of the Union Carbide PuraSiv N control system, it was first necessary to select analytical methods for measuring the concentrations of the NO_x species (NO, NO_2, N_2O_4 and acid mist) entering and leaving the sieve. The basic approach decided upon was to use an instrumental method capable of providing continuous NO_x concentration profiles during sieve operational cycles, and to supplement the data with measurements made using EPA Method 7, "Determination of Nitrogen Oxide Emissions from Stationary Sources", (PDS procedure). A major consideration in the selection of the instrumental method to be used was the commercial availability of reliable instrumentation.

Two instrumental methods, chemiluminescent detection and photometry received primary consideration during the initial planning stages of the testing program. Instrumentation was available using both analytical techniques and either instrument offered the degree of range needed to measure concentrations as low as 10 to 100 ppm, the expected outlet NO_2 concentration, and as high as 5000 ppm, the maximum expected inlet concentration.

Process information for the nitric acid plant indicated that the tail gas stream would be at approximately 6.21×10^5 N/m^2 (90 psig) pressure, 32°C (90°F), and saturated with nitric acid mist. Because neither the chemiluminescent analyzer or the UV-visible photometric analyzer were capable of measuring nitric acid species, it became necessary to consider another analytical method for measuring nitric acid concentrations.

An investigation of the analytical methods specific for measuring nitric acid revealed that continuous monitoring instrumentation was not commercially available, but developmental work had been performed. Miller and Spicer have reported the adaptation of a Mast microcoulomb meter for use in measuring low concentrations of nitric acid found in ambient air. (1) However, adaptation of this method for analyzing the higher concentrations of nitric acid found in the tail gas stream was considered to be beyond the scope of this test program.

The remaining alternative for measuring nitric acid was to collect and analyze integrated samples of the tail gas stream. The integrated samples would have to be collected isokinetically (due to the presence of the acid mist) in order to obtain samples which would have nitric acid concentrations representative of actual concentrations in the tail gas stream. Because of the high pressure of the tail gas stream, 6.21×10^5 N/m^2 (90 psig), it would not be possible to use a conventional sampling technique. A specially-designed probe would be needed and sampling ports would have to be installed, necessitating modifications to the plant's existing piping. Consultation with Hercules concerning this matter made it apparent that for safety reasons they were reluctant to allow any modifications to the existing piping. With the approval of EPA it was decided not to attempt either isokinetic sampling or the isolation of nitric acid and nitric acid mist from the NO and NO_2 present in the tail gas stream. The nitric acid and nitric acid mist concentrations would be included in the total NO_x determined by the PDS method. The decision was made to use photometric instrumentation rather than chemiluminescent for the analysis of NO and NO_2. This decision was based on reports (unpublished study)

of a corrosion problem that had occurred with a chemiluminescent analyzer used for monitoring NO_x in the presence of acid mist.

SAMPLING LOCATIONS

Two different inlet sampling sites were tested during the study. Initially, during the first eight cycles of testing (Tests 1-8), the inlet sampling was conducted at HV-12, an existing globe valve on an 8-inch line located between the mist eliminator and the two adsorption beds. Because the globe valve was not attached directly to the 8-inch line, but was connected via a 5-foot section of uninsulated 1/2-inch pipe which extended vertically downward, it was necessary to use a knock-out pot to eliminate acid which collected in the pipe as a result of condensation. The condensation occurred at night and during the early morning hours, when the outside temperature was less than the temperature of the cooled tail gas stream leaving the mist eliminator. A schematic of the sampling site is shown in Figure IV-1.

During the final three cycles of testing (Tests 9-11), the inlet sampling was conducted at HV-23, an existing valve on an 8-inch line upstream of the feed chiller and mist eliminator. The final work plan for the test did not include testing at this location, but upon a request by Union Carbide and approval by EPA, HV-23 was added as an inlet sampling location. The same sampling setup was used for HV-23 as for HV-12.

Initially, during the planning stages of the testing program, HV-23 had been considered as a possible inlet sampling location, but was eliminated after the decision was made not to measure the acid mist. This decision was based on the fact that continuous instrumentation for monitoring acid mist was not available, and grab samples would not have been representative without isokinetic sampling. Furthermore, the unique feature of the PuraSiv N system is the use of molecular sieve adsorption to remove NO_x and it is primarily because of this feature that the system is of interest. The cooler and mist

FIGURE IV-1. SCHEMATIC DIAGRAM OF SAMPLING TRAIN USED ON INLET TEST SITES HV-12 AND HV-23

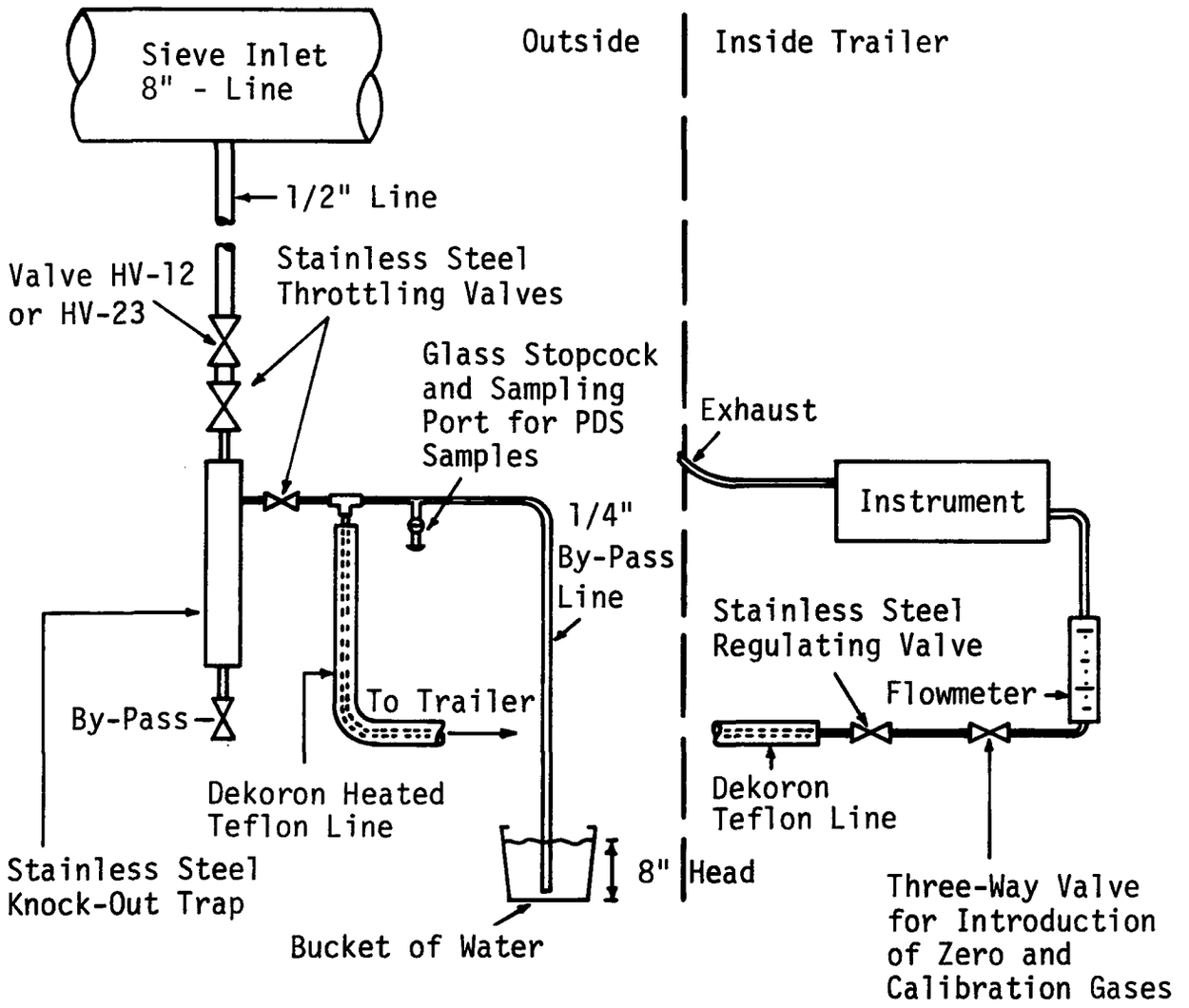

eliminator are standard hardware items with documented performance in similar applications. Because acid mist is known to have caused serious sampling difficulties in the past and because only gaseous NO_x was to be measured, sampling at HV-23 was not considered further until requested by Union Carbide.

The rationale for finally adding HV-23 as an inlet testing site was that because the feed chiller and mist eliminator are part of the packaged system, a more representative system evaluation would be obtained if samples were taken at HV-23. It was still feared that the acid mist present at HV-23 might interfere with the sampling instruments, so sampling at HV-23 was scheduled after the HV-12 sampling was completed. Fortunately, the knock-out trap and bypass system successfully minimized acid mist related problems.

The sieve outlet sampling site used during all 11 cycles of testing was an existing globe valve, HV-13, located on a 9-inch line which carried the cleaned tail gas stream to the XRD power recovery unit. A schematic of the sampling train used at this site is shown in Figure IV-2. Because the cleaned tail gas stream was essentially moisture-free (normal operation of the sieve bed removes moisture from the tail gas stream), it was not necessary to use a knock-out pot. The sampling line was connected directly to HV-13.

SAMPLING PROCEDURES

During the tests, the photometric analyzers and apparati for evacuating the sample flasks and recovering the Method 7 grab samples were housed in a 20-foot trailer. The trailer was heated in order to maintain a stable temperature environment for the instrumentation. The photometric analyzers were connected to the sampling ports on the sieve via thermostatically controlled heated 1/4" Dekoron* teflon line which was maintained at about 32°C.

---

*Registered Trademark of Samuel Moore & Company.

FIGURE IV-2. SCHEMATIC DIAGRAM OF SAMPLING TRAIN USED ON OUTLET TEST SITE HV-13

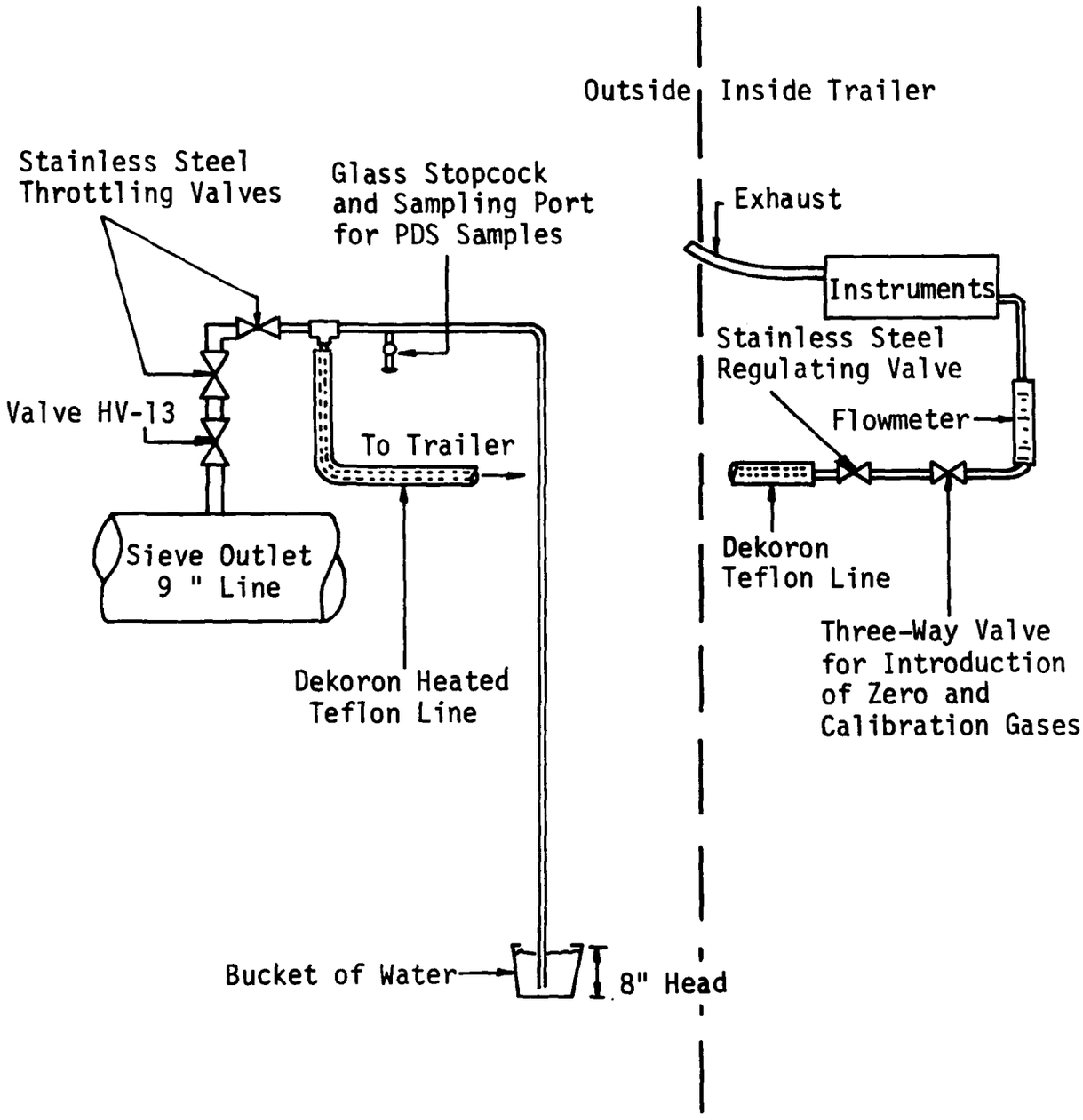

Continuous Photometric Analysis

The NO_x concentrations at the inlet and outlet test sites were each determined by an individual Dupont 411 Photometric Analyzer and recorded on strip chart recorders. The measurements were initiated at the beginning of a four-hour adsorption cycle and when possible continued until the completion of two full cycles. (Due to upset conditions caused by process and sieve equipment failure, it was only possible to monitor one complete four-hour adsorption cycle on March 5 and 11, 1975.)

During the tests, the photometric analyzers were manually switched back and forth from the NO_2 to NO_x ($NO + NO_2$) modes of operation. Changing to the NO_x mode was accomplished by sealing the instrument sample cell and introducing excess oxygen for converting the NO to NO_2. The NO_2 measurements that were made while the analyzers were in the NO_2 mode represented a real time variation of concentration with time, while the NO_x measurements made while the sample cells were sealed, represented the instantaneous $NO + NO_2$ concentration existing at the time the sample cells were sealed.

During the first three adsorption cycles tested, the analyzers were placed in the NO_x mode approximately every 15 minutes. Each of the NO_x measurements took approximately five minutes to insure complete conversion of NO to NO_2. At the end of each NO_x determination, the NO_2 measurements were resumed. By completion of the third cycle of testing, it had become evident that NO was not present in the outlet stream. (Normal operation of the sieve catalyzes the oxidation of NO to NO_2.) After the third cycle of testing, NO_x measurements at the outlet were made approximately once an hour instead of every 15 minutes.

EPA Method 7

The grab samples for the EPA Method 7 analysis were taken at the same sampling sites as the samples for the continuous photometric analyzers.

Thus during the first eight cycles (Tests 1-8) the inlet sampling was conducted at HV-12. The outlet sampling site for all eleven cycles was HV-HV-13.

The sampling procedures used for taking the grab samples followed the EPA Method 7 procedures as located at 40 CFR 60.85, however, it was necessary to deviate slightly from the published method and make the following exceptions:

1. The evacuation of the sample flask, leak check, and recording of the initial flask pressure was done inside the trailer several minutes before each sample was taken, rather than outside the trailer at the sampling site.

2. A knock-out pot was incorporated into the inlet sampling train upstream of the point of sample removal. A heated sample line was not utilized.

Both variations from the standard sampling procedure were necessary. The flask evacuation was performed inside the trailer in order to eliminate the difficulties associated with setting up the evacuation apparatus outside, and to reduce the overall equipment requirements. By doing so, it was possible to use one vacuum pump and one manometer for preparing the flasks for each site. In addition one person was able to prepare the flasks and take both samples. The knock-out pot in the sampling train was required to stop condensation from entering the photometric analyzers. Because the Method 7 sampling train used was designed to interphase with the sampling train for the continuous photometric samples, it was not possible to avoid its use. It is believed, however that the knock-out pot was more suited for the purpose of eliminating the condensation occurring in the 1/2 inch process line than a heated sample line. A heated sample line would not have been able to evaporate a sudden release of condensation buildup from the 1/2 inch line.

The grab samples were taken at the inlet and outlet sampling sites approximately every hour during the tests. (On March 5 and 11, the grab samples were taken approximately every half hour.) Each sample was taken at a time corresponding to an NO_x determination with a photometric analyzer. The inlet and outlet sampling times were staggered by five minutes to allow time for one person to take both samples. After the grab samples were collected, the flasks were shaken for 5 minutes, allowed to sit for 16 hours and recovered following Method 7 procedures. The samples were shipped to the analytical laboratory where the analysis could be carried out in a nitrate-free environment.

In addition to taking NO_x samples at the inlet and outlet sampling sites, three samples of each calibration gas and one of the zero gas were taken as a means of checking the accuracy of the Method 7 procedure.

PROCESS DATA

In addition to the NO_x measurements, various process conditions were recorded in a process log once an hour in order to characterize the inlet and outlet streams with respect to flow rate, temperature, and pressure. These data were obtained from existing gauges and recorders which were part of the plant's process instrumentation. Table IV-1 lists the process conditions measured.

The recorded records of the sieve inlet flow, regeneration flow, pressure drop, and bed temperature were also made available by Hercules after completion of the testing.

The utility usage of the sieve system was measured in order to provide data input for subsequent economic analysis. The parameters measured were the amount of electrical power consumed by the sieve and associated equipment, the volume of treated water used for cooling, and the fuel consumption of the regeneration heater. Cooling water usage was determined by installing a water meter ($\pm$ 2% accuracy) in the 3-inch treated water

Table IV-1. PROCESS CONDITIONS MONITORED

PuraSiv N Process

Tail Gas Pressure
Tail Gas Temperature
Sieve Inlet Gas Flow
Sieve Inlet Gas Temperature (after mist eliminator)
Pressure Drop Across Sieve
Sieve Regeneration Gas Flow
Sieve Regeneration Gas Temperature (inlet to bed)
Bed Temperature During Regeneration (top of bed)
Sieve Regeneration Gas Temperature (outlet of bed)
Sieve Regeneration Gas Pressure
Sieve Outlet Gas Flow
Sieve Outlet Gas Temperature
Brine Temperature

PuraSiv N Utility Usage

Electrical Power
Cooling Water Flow
Regeneration Heater Fuel Consumption

Acid Production

Feed Air Flow
Air Receiver Pressure
System Pressure
Back Pressure
XRD RPM
Injection Water Flow
Acid Strength At Trays 4, 16, 26 & 29
Product Strength

feed line. The water meter was not functional until the 7th test cycle due to a delay in receiving a part need for repairing the meter which had been damaged in shipment to the test site. Electrical usage was measured with a recording volt meter and a recording ammeter (± 3% accuracy) installed at the main power box serving the sieve system. Fuel consumption was determined by periodically measuring the level of fuel in the storage tank with a dip stick. The accuracy of the fuel measurement is unknown.

ANALYTICAL PROCEDURES

Continuous Photometric Analyses

The two DuPont Model 411 Photometric Analyzers used in the study determine NO_2 concentration by measuring the absorption of light passing through a sample at two different wave lengths (436 and 546 nm). NO concentration is determined by quantitatively converting it to NO_2 in the presence of 4.14×10^5 N/m^2 (60 psi) of excess oxygen and measuring the absorbance. For the outlet sampling site, the DuPont analyzer was equipped with the standard 20-inch cell. The instrument was calibrated for 0-500 ppm full scale. The inlet instrument was equipped with a special 7-inch cell and was calibrated for 0-5000 ppm full scale.

The manufacturers specification for the precision of the instruments was ± 1% of the full-scale range used. Thus for the outlet site, the precision was ± 5 ppm, and for the inlet site ± 50 ppm. The accuracy of the measurement is dependent on the accuracy of the calibration standards used. The calibration gases for the inlet and outlet instruments were specified by the manufacturer to be within ± 2% of the stated concentration and traceable to a National Bureau of Standards primary standard.

The measurements of the NO_2 concentrations in the inlet and outlet streams were made at atmospheric pressure and at the instruments cell temperature, approximately 45°C. The reduction in pressure from process conditions of 6.21×10^5 N/m^2 (90 psig) to atmospheric was accomplished using a series

of regulating and throttling valves located after the sampling ports. (See Figures IV-1 and IV-2.) The reduction to atmospheric pressure before measurement was done for several reasons:

1. The reduction to atmospheric pressure shifts the equilibrium between NO_2 and its dimer, N_2O_4 to the left.

   $$2NO_2 \rightleftarrows N_2O_4$$

   Because N_2O_4 does not absorb light appreciably in the region of 436 nanometers it is not measured by the DuPont 411 Photometric Analyzer. At the prevaling analytical conditions, atmospheric pressure and a cell temperature of 43°C, the extent of dimerization in a sample containing 4000 ppm NO_2 is approximately 0.6%. At lower concentration the extent of dimerization is even less.

2. Pressure limitations of the instrument cell and valves would not permit the introduction of 4.14×10^5 N/m^2 (60 psi) of O_2 into the cell during the NO_x determination in addition to an initial cell pressure of 6.21×10^5 N/m^2 (90 psig).

3. Operation of the cells at process conditions would have made it necessary to monitor cell pressure continuously in order to correct the instrument calibration for changes in pressure.

Thus, the reduction of the inlet and outlet sampling streams to atmospheric pressure greatly simplified both sampling and calibration procedures. At atmospheric pressure, the extent of the dimerization of NO_2 to N_2O_4 was not considered significant and no corrections were made to account for it.

Neither instrument was equipped with a thermostically-controlled cell for maintaining constant cell temperature. Heat produced by the electrical components within the instrument cases resulted in cell temperatures that

were above the ambient temperature. Cell temperatures were monitored by mercury-in-glass thermometers attached to each cell. During the tests, the instrument cases remained closed, keeping the sample cells at a stable elevated temperature. The inlet instrument was originally calibrated at a cell temperature of 46.1°C (115°F), and the outlet instrument at a cell temperature of 42.2°C (108°F). While the tests were being conducted, the cell temperature varied slightly due to changes in temperature inside the trailer. The range of variation was ± 6°C from the calibration temperatures. The maximum error expected from such temperature changes, based on ideal gas law calculations, is ± 2%. Most of the time, the instrument cell temperatures were within ± 3°C of the calibration temperatures.

Calibration Gases

Two NO_2 calibration gases were used in the field study. The gases were obtained from the Rare and Specialty Gas Department of Airco Industrial Gases, Airco, Inc., Riverton, New Jersey. The gases were supplied in specially-treated aluminum cylinders to increase concentration stability. Analyses supplied with the gases indicated the high concentration standard contained 3980 ppm NO_2 and the low concentration standard contained 35 ppm NO_2. In both cases the balance of the gases was nitrogen. Airco's NO_2 analyses were specified to be within ± 2%, and traceable to a National Bureau of Standards primary standard. Additional information on the method of preparation and analyses of NO_2 standards was obtained from two papers which were subsequently published.[(2)(3)]

The NO_2 field calibration gases were checked in the ES laboratory prior to the field testing by comparing them with another calibration gas standard and also by comparing them with the internal calibration filters contained in the DuPont analyzers. The high concentration standard checked within 1% of the vendor analysis. The low standard, however,

was found to be 33 ppm, approximately 6% below the manufacturer's stated concentration. Although the standard was considered suspect, time did not allow return of the standard for reanalysis prior to the field testing. Thus it was decided that both gases would be submitted for reanalysis after completion of the study.

After both gases were submitted for reanalysis, Airco revealed that the low concentration NO_2 standard had been initially mislabled and that the original analysis had been 31 ppm. Table IV-2 lists the concentrations of the calibration gases reported by Airco before and after the tests.

Table IV-2. CALIBRATION GAS ANALYSES

Date	Outlet Standard (ppm) NO_2	Inlet Standard (ppm) NO_2
1/28/75	31	3,980
4/14/75	32	3,910

Calibration Procedures

Initial instrument calibration and check-out was performed at the ES McLean, Virginia laboratory. The standard start-up procedure, as outlined in the instrument manual, was performed using the instrument's built in test functions. The instruments were found to be within the factory specifications stated in the manual. The linearity of each instrument's response was determined over an absorbance range of 0 to 0.95 absorbance units, (approximately 0 to 3,300 ppm for the inlet instrument and 0 to 950 ppm for the outlet instrument). The observed linearity deviations were less than 1% of full scale.

Upon arrival at the test site, the instruments were allowed to warm up overnight and the test functions were checked again. No changes were observed from the way the instruments had performed in the laboratory.

Using both instruments and the same gain settings as used in the laboratory, the calibration of both instruments was checked using the calibration gases. For the high standard, both instruments yielded values within $\pm$ 1% of the stated concentration. The low standard, when checked on the outlet instrument measured 32 ppm. Because all indications were that the reported concentration was incorrect, the decision was made to consider the gas to be 32 ppm and not adjust the span settings to give a 35 ppm output. If when reanalyzed the gas proved to be other than 32 ppm, the measurements made during the study could easily be corrected.

The analysis reported by the vendor for the low concentration NO_2 standard verified that the decision not to adjust the instrument span was correct. No corrections to the measured inlet or outlet concentrations were necessary.

Each day before initiating the NO_x measurements, the calibration of the photometric analyzers was checked using the calibration gases. The instruments were zeroed before each calibration using zero nitrogen containing < 0.1 ppm NO_x. The instruments were also zeroed periodically during testing by diverting the sample gas flow and introducing zero gas into the instrument sample cell. Any zero drift which had occurred was compensated for using the instruments' zeroing potentiometer. All adjustments that were made were noted on the recorder strip charts and written down in a field data log kept for each instrument. After completion of each day's tests, the calibration of each analyzer was verified again.

EPA Method 7 Analyses

The EPA Method 7 procedure, "Determination of Nitrogen Oxide Emissions from Stationary Sources", sometimes referred to as the phenoldisulfonic acid (PDS) procedure, utilizes a wet chemical colorometric method of analysis to determine the nitrate in species present in a grab sample. A sample of the subject gas is collected in an evacuated 2-liter glass flask.

The flask contains an absorbing reagent which consits of sulfuric acid and hydrogen peroxide. In the flask NO_x species, except nitrous oxide (N_2O) are oxidized to the nitrate over a period of at least 16 hours. After absorption, the solution is made alkaline with sodium hydroxide and slowly evaporated to dryness. Phenoldisulfonic acid reagent is added and the nitrate ion content is determined colorimetrically at 420 nm using a spectrophotometer. A calibration curve is prepared using standard nitrate solutions and the phenoldisulfonic acid reagent.

The accuracy and precision of Method 7 have been the subject of a number of studies.[4][5][6] A recent study has estimated the accuracy and precision of the method from collaborative testing results.[6] The within-laboratory precision, between-laboratory precision, and laboratory bias were estimated to be 14.88%, 18.47% and 10.49% of the sample mean, respectively. The method was sited as being accurate at the 95 percent level of confidence; however, because of the relatively large within-laboratory and between-laboratory standard deviations (estimates of the method precision), there was considerable scatter among the observations. Of the three different concentration levels tested in the study for determining the method accuracy, the standard deviations ranged from 7 to 11% of the sample means. Individual determinations ranged from 76 to 130% of the true sample concentrations.

DATA REDUCTION

The strip charts containing the recorded outputs of the photometric analyzers provided a nearly continuous record of the NO_2 concentrations, and intermittent measurements of the NO_x ($NO + NO_2$) concentration. A data reduction technique was used which provided instantaneous sieve inlet/outlet NO_x concentrations and corresponding flow rates at appropriate intervals. The technique utilized linear interpolation and application of the trapezoidal rule for integration. The following steps summarize the technique used. A more complete description and examples of the calculations are contained in Volume II, Appendix A of this report.

1. The nearly continuous records of inlet and outlet NO_2 concentrations were converted to continuous form using linear interpolation in order to provide an estimate of the NO_2 concentrations which existed while the analyzers were being operated in the NO_x or zero modes. The technique was applied by drawing a straight line on the strip chart between the points where the NO_2 measurements terminated and started again.

2. Zero drift which occurred during the intervals between zeroing of the instruments was distributed over the interval using linear interpolation. This provided an estimate of the instrument zero baseline at any point in time.

3. Points were selected for reading the NO_2 concentrations from the recorded charts. The points selected included, but were not limited to, all points which corresponded to the beginning of each NO_x measurement.

4. The NO_2 concentrations for each point were obtained from the differences in the recorded outputs and the zero baselines, using the proper instrument range factors.

5. NO_x concentrations were calculated from each of the recorded NO_x determinations using the same procedure as in step 4.

6. The ratio of NO_2 to NO_x was computed for each point corresponding to the beginning of an NO_x measurement.

7. For the inlet test sites, all NO_2 concentrations without corresponding NO_x measurements were converted to NO_x concentrations using the calculated ratios of NO_2 to NO_x. Linear interpolation was used to derive the ratios from the ratios determined in step 6.

8. For the outlet test sites, NO_2 and NO_x concentrations were equal because of the absense of NO in the outlet stream.

9. Sieve inlet and regeneration flow rates (scfm) were read from the recorded process charts corresponding to all points selected in step 3. The flow rate discharged from the system to the stack was calculated for each point by subtracting the regeneration flow rate from the inlet flow rate.

10. A computer program was used to calculate instantaneous mass flow rates and instantaneous control efficiencies occurring at each of the points during the cycles. The program also calculated mass loading occurring over the intervals between the points using the trapezoidal rule, cumulative mass loading over the cycle, average efficiency during each interval, average efficiency over each cycle, and average concentration of NO_x emitted over the cycle.

SECTION V

DISCUSSION OF RESULTS

During the testing program at Hercules, eleven complete cycles of operation of the PuraSiv N unit were tested in order to determine the extent of NO_x removal occurring during a cycle of operation. The NO_2 concentrations at the inlet and outlet of the unit were measured continuously during each cycle using photometric analyzers. The sums of NO and NO_2 concentrations existing at both the inlet and outlet were determined periodically during each cycle by the same photometric analyzers. In addition, 117 NO_x grab samples were taken for analysis by EPA Method 7. Plant and sieve process data were obtained to permit calculations of NO_x mass flow rates, nitric acid production rates, and sieve utility usage. These data also provided a means of characterizing the overall process conditions existing during each cycle of operation.

Contained in this section are tables and figures summarizing and illustrating the performance of the PuraSiv N unit, and comparing the test results obtained using the photometric analyzer and EPA Method 7.

Table V-1 summarizes instantaneous inlet and outlet NO_x concentrations and sieve flow rates measured during test 11 and the corresponding calculated instantaneous mass loadings and control efficiencies for that test. Tables similar to Table V-1 have been prepared for tests 1 through 10 and are contained in Volume II of this report. Test 11 was chosen for illustration here because plant operating conditions during the test were very stable and were closer to design conditions than during any of the other tests.

The data presented in Table V-1 are based on inlet NO_x concentration measurements made at HV-23. Therefore, the four NO_x mass flow rates

TABLE V-1. SUMMARY OF CALCULATED NO_X MASS FLOW RATES AND CONTROL EFFICIENCIES FOR INSTANTANEOUS FLOW AND CONCENTRATION DATA FOR TEST--11

HERCULES INC., RUN 11, INLET HV-23, OUTLET HV-13 UNIT A 0711-1114 3/14/75

TIME INTO CYCLE (MIN)	INLET FLOW (SCFM)	REGEN. FLOW (SCFM)	INLET CONC. (PPM)	OUTLET CONC. (PPM)	MASS FLOW RATE IN (G/MIN)	MASS FLOW RATE ADS. (G/MIN)	MASS FLOW RATE REGEN. (G/MIN)	MASS FLOW RATE EMIT. (G/MIN)	% REDUC. OF NOX DUE TO ADS.	% REDUC. OF NOX DUE TO REGEN.	% REDUC. OF NOX
0.0	5500	1020	3340	190	1010.0	952.6	10.66	46.80	94.31	1.05	95.37
3.0	5500	1020	3320	90	1004.0	976.7	5.05	22.17	97.29	0.50	97.79
4.0	5500	1015	3360	82	1016.1	991.3	4.58	20.22	97.56	0.45	98.01
6.0	5500	1015	3310	78	1000.9	977.4	4.35	19.23	97.64	0.43	98.08
14.0	5475	1020	3220	112	969.3	935.6	6.28	27.43	96.52	0.65	97.17
15.0	5475	1020	3220	124	969.3	932.0	6.95	30.37	96.15	0.72	96.87
19.0	5450	1020	3380	101	1012.8	982.5	5.66	24.60	97.01	0.56	97.57
23.0	5450	1020	3390	81	1015.8	991.5	4.54	19.73	97.61	0.45	98.06
34.0	5475	1020	3290	64	990.4	971.1	3.59	15.68	98.05	0.36	98.42
39.0	5475	1020	3280	61	987.4	969.0	3.42	14.94	98.14	0.35	98.49
49.0	5475	1020	3260	58	981.3	963.9	3.25	14.21	98.22	0.33	98.55
59.0	5475	1020	3200	58	963.3	945.8	3.25	14.21	98.19	0.34	98.53
64.0	5475	1020	3150	61	948.2	929.9	3.42	14.94	98.06	0.36	98.42
79.0	5450	1020	3120	79	934.9	911.2	4.43	19.24	97.47	0.47	97.94
94.0	5475	1020	3110	95	936.2	907.6	5.33	23.27	96.95	0.57	97.51
97.0	5475	1020	3100	99	933.2	903.4	5.55	24.25	96.81	0.59	97.40
109.0	5475	1020	3100	114	933.2	898.9	6.39	27.92	96.32	0.69	97.01
124.0	5475	1020	3130	128	942.2	903.7	7.18	31.35	95.91	0.76	96.67
139.0	5475	1020	3090	141	930.2	887.7	7.91	34.54	95.44	0.85	96.29
154.0	5475	1020	3080	156	927.2	880.2	8.75	38.21	94.94	0.94	95.88
160.0	5450	1020	3060	164	916.9	867.8	9.20	39.95	94.64	1.00	95.64
169.0	5425	1020	3060	178	912.7	859.6	9.98	43.11	94.18	1.09	95.28
184.0	5450	1020	3050	200	913.9	854.0	11.22	48.71	93.44	1.23	94.67
199.0	5475	1020	2990	219	900.1	834.1	12.28	53.64	92.68	1.36	94.04
214.0	5475	1020	2960	230	891.0	821.8	12.90	56.34	92.23	1.45	93.68
220.0	5475	1020	2960	235	891.0	820.3	13.18	57.56	92.06	1.48	93.54
229.0	5475	1020	2940	240	885.0	812.8	13.46	58.79	91.84	1.52	93.36
243.0	5475	1020	2880	246	866.9	792.9	13.80	60.[illegible]	91.46	1.59	93.05

given in Table V-1 represent instantaneous values of: NO_x mass flow rate into the PuraSiv N system; NO_x mass rate removed by the combined action of the feed chiller, mist eliminator, and adsorption bed; NO_x mass flow rate in that portion of the adsorption bed outlet stream that is diverted for regeneration; and NO_x mass flow rate in the balance of the sieve outlet stream that is discharged from the PuraSiv N system via the power recovery unit to the plant outlet stack. For tests 1 through 9 where inlet NO_x concentrations were measured at HV-12, "Mass Flow Rate In" represents the NO_x flow rate entering the adsorption bed; and "Mass Flow Rate Ads." represents the NO_x mass removal rate of the adsorption bed only. It should be noted that because plant operation was so variable, no directly comparable tests were obtained for the two inlet sites. From the data that was obtained no definitive differences were noted in the results from the two inlet sampling sites.

The instantaneous values of percent reduction given in Table V-1 were calculated from the instantaneous NO_x mass flow rates. Thus, it was possible to separately calculate the NO_x reduction achieved by the adsorption beds (including feed chiller and mist eliminator for runs 9 through 11), and the additional NO_x reduction resulting from the diversion of that portion of the adsorption bed outlet flow that is used for regeneration. The overall effective reduction achieved by the PuraSiv N system is a combination of these two removal mechanisms. This overall reduction efficiency, as shown in the last column of Table V-1, was calculated using the instantaneous NO_x mass flow rate emitted from the PuraSiv system to the plant stack and the instantaneous NO_x mass flow rate into the PuraSiv N system.

The inlet NO_x concentrations ranged from 3390 ppm to 2880 ppm during test 11. The highest inlet flow rate during the test was 155.7 $\underline{N}m^3$/min

5500 scfm)[a], the lowest was 153.6 $\underline{Nm}^3$/min (5425 scfm). Outlet NO_x concentrations ranged from 58 ppm to 246 ppm which occurred at the end of the cycle. The average outlet NO_x concentration was 139 ppm. For tests 1 through 10 the sieve inlet flow rates and concentrations were somewhat more variable. Test 3 had the greatest range of inlet flow rates, 76.5 to 166.4 $\underline{Nm}^3$/min (2700 to 5875 scfm). The flow rate of 76.5 $\underline{Nm}^3$/min, the lowest recorded during any test, occurred during a temporary outage of the XRD power recovery unit. The highest inlet sieve flow rate recorded was 180.5 $\underline{Nm}^3$/min (6375 scfm) and occurred during test 9. The highest inlet NO_x concentration measured was 4370 ppm, occurring during test 10; the lowest, 680 ppm, occurred during test 6 when the plant was operating at about 50% of capacity. Outlet concentrations ranged from a low of 6 ppm occurring near the beginning of test 6 to a high of 291 ppm occurring at the end of test 2. One higher outlet concentration, 308 ppm, was observed during test 3. This was the result of a temporary upset condition and is not considered representative of normal operation.

During test 11, the instantaneous percent reductions of NO_x ranged from a high of 98.55% to a low of 93.05%. During tests 1 through 10, the maximum instantaneous percent reduction of NO_x, 99.53%, occurred at the beginning of test 6, when acid production and inlet NO_x mass flow rate were approximately 50% and 25% of the normal operating values, respectively. The minimum percent instantaneous reduction (excluding an upset period during test 3) was 91.88% which occurred at the end of the adsorption cycle during test 2. Production during test 2 was about 95% of plant capacity. During the tests, the contribution of the regeneration process to the instantaneous percent reduction of NO_x ranged from a high of 1.88% during test 2 to a low of 0.24% at the beginning of test 6.

---

[a] All sieve inlet flow rates are based on standard conditions of 15.56°C (60°F) and 760 mm pressure, the standard conditions for the calibrated readout on the plants' process instrumentation.

Figures V-1 through V-3 are plots of the instantaneous mass loading and overall control efficiencies for tests 2, 6 and 11. Tests 2 and 11 were chosen for illustration because they represent tests made at each of the two inlet sites at similar operating conditions. While the operating conditions were not identical, they were closer for these two tests than any of the other tests. Test 6 was included to show how the PuraSiv N performed under highly variable operating conditions.

Examination of these figures reveals that the inlet NO_x mass loadings were quite variable during the cycles. The variability was due in part to the changes in production rate which occurred when compressors were put on and off line. This is particularly evident in the case of test 6. The 17 m^3/min compressor and the 37.9 m^3/min unit were both off line at the beginning of test 6. The small 17 m^3/min compressor was put on line 80 minutes into the cycle. Variability of NO_x mass loading was also due to changes in process conditions which occurred as the plant made a transition from start up to normal production.

As is apparent in Figures V-1 and V-3, the efficiency of the molecular sieve unit rapidly increases immediately after the freshly regenerated bed is switched on line. The efficiency then decreases temporarily, followed by a rise to a maximum value for the cycle, and then decreases steadily until a new bed is put on line. The temporary decrease in efficiency occurred in all cases except test 6. In this case, the molecular sieve was placed on line after the plant had been shut down for the weekend. The adsorption bed had been purged with air following startup of the plant. For this reason, it was not a typical beginning of a cycle. The cause of the temporary decrease in efficiency at the beginning of the cycles is not known.

FIGURE V-1. INSTANTANEOUS NO_x MASS LOADING AND CONTROL EFFICIENCY TEST--2 (1010 TO 1408 3/6/75)

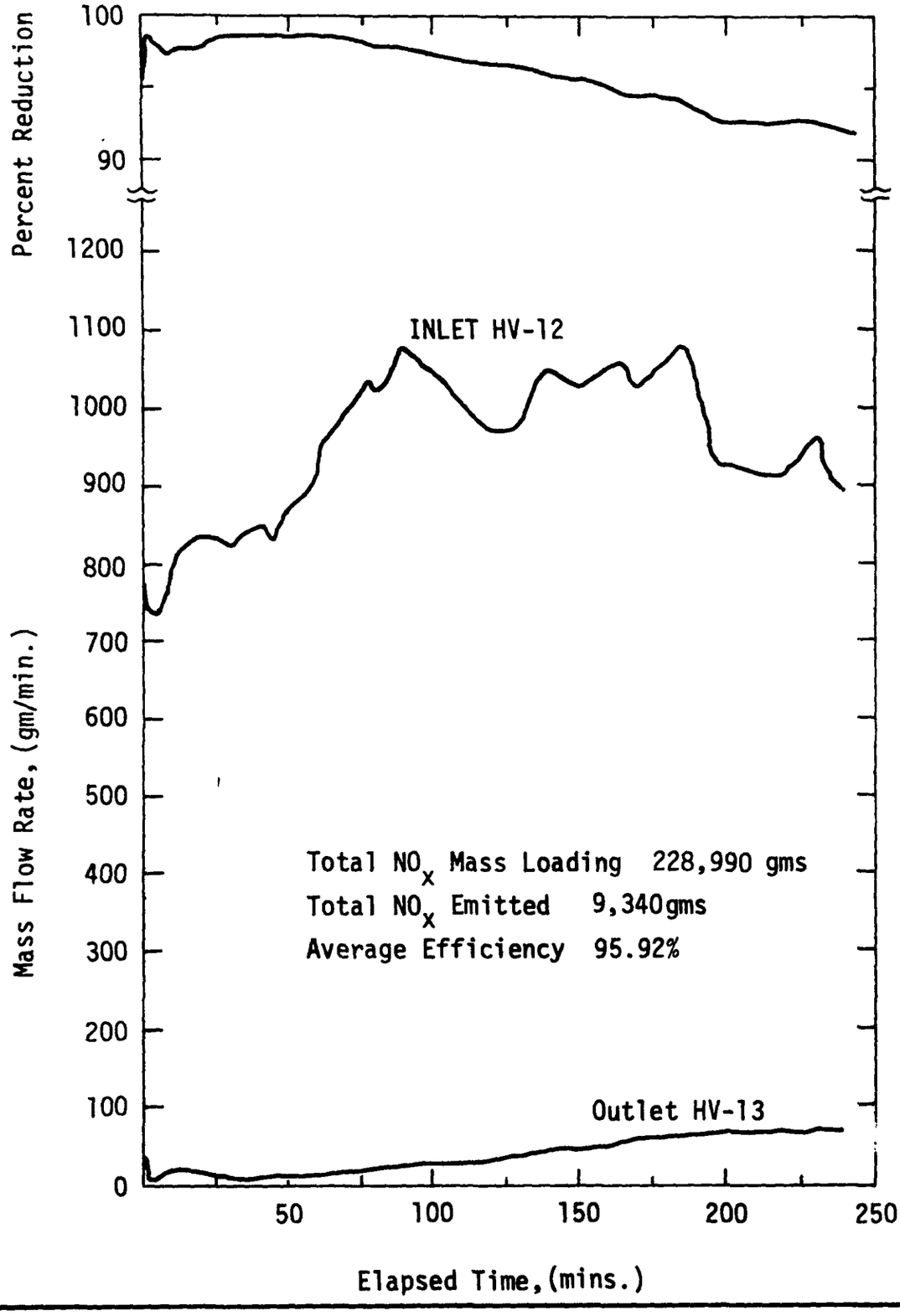

FIGURE V-2. INSTANTANEOUS NO_x MASS LOADING AND CONTROL EFFICIENCY TEST--6 (1400 TO 1754 3/11/75)

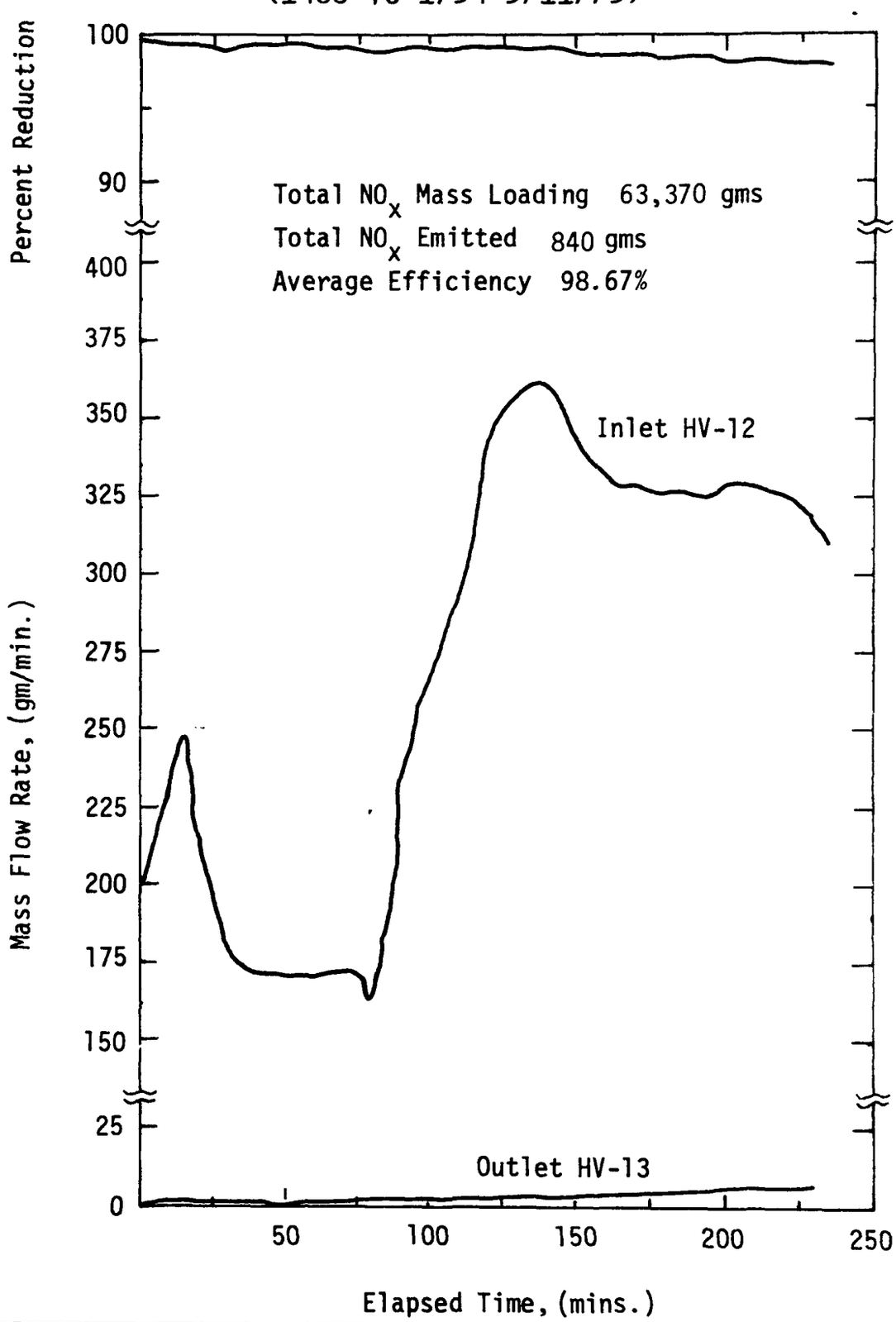

FIGURE V-3. INSTANTANEOUS NO_x MASS LOADING AND CONTROL EFFICIENCY TEST--11 (0711 TO 1114 3/14/75)

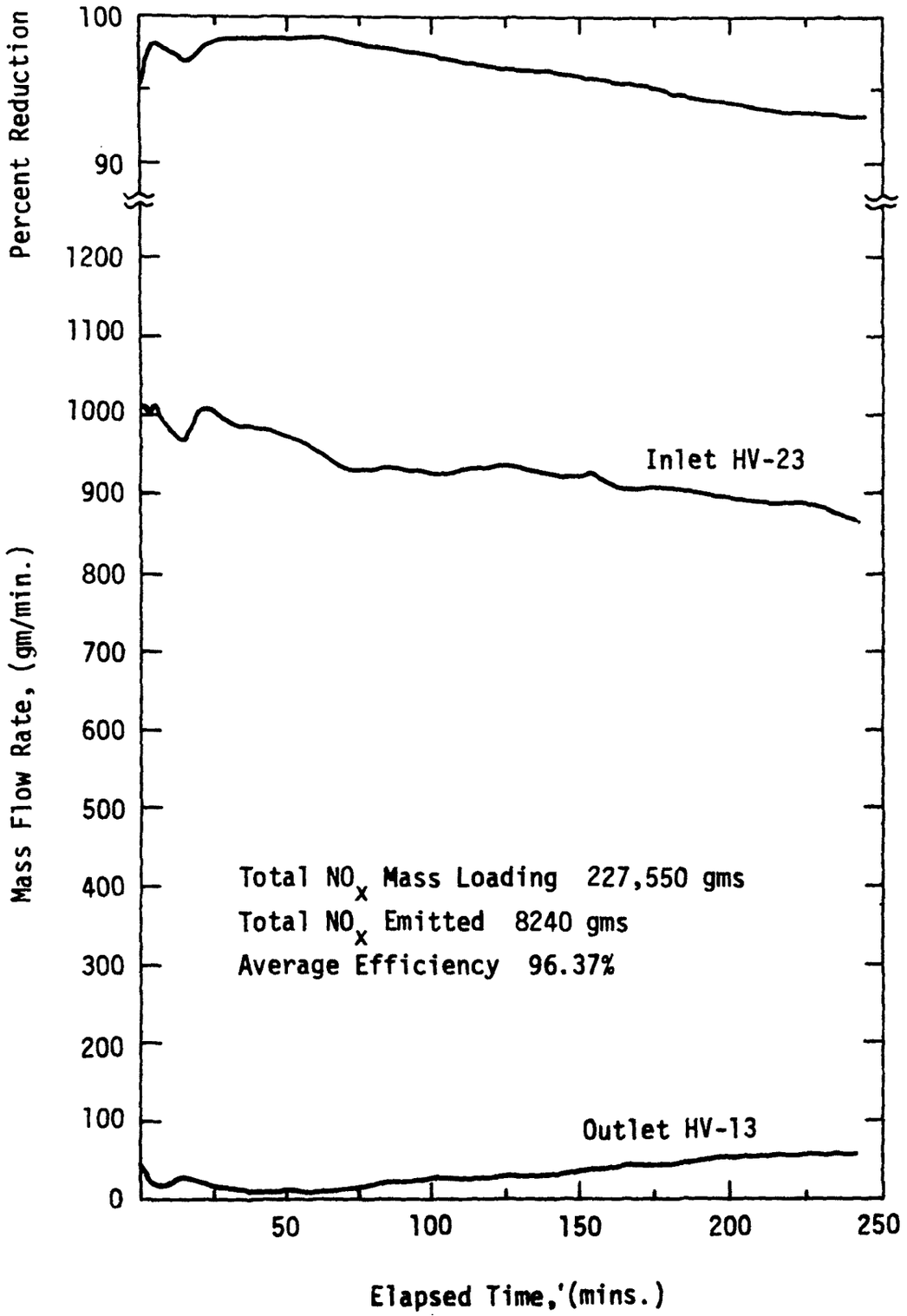

Figures V-4 through V-6 are plots of the inlet and outlet NO_x concentration profiles and integrated outlet NO_x concentrations for test 2, 6 and 11. Examination of these figures reveals that the variation of inlet NO_x concentration was the major factor affecting the shape of the inlet mass loading profiles shown in Figures V-1 through V-3. The integrated outlet NO_x concentrations for the complete adsorption/regeneration cycles were 154, 17 and 139 ppm for tests 2, 6 and 11 respectively. The integrated outlet NO_x concentrations for the remaining cycles ranged from 63 ppm for test 7, to 137 ppm for test 10. Test 6 was the only test for which the integrated outlet NO_x concentration remained below 50 ppm, the level claimed by Union Carbide as the maximum integrated outlet NO_x concentration which is emitted over a cycle when the unit is operated at design rate.

Table V-2 summarizes mass loading, control efficiency, and average ppm of NO_x emitted for intervals during test 11. Table V-3 summarizes cumulative mass loading, average control efficiency and average ppm of NO_x emitted during the test. Similar tables for the other ten tests are contained in Volume II. The average control efficiencies for tests 1 through 11 ranged from 98.68 to 95.92% and are summarized in Table V-4. The average efficiencies were calculated from the ratio of total mass of NO_x emitted from the PuraSiv system to total mass of NO_x entering the system during each cycle. As was expected, the highest average efficiency, 98.67% occurred during test 6 when the inlet mass loading was substantially lower than the loading for the other tests, due to a lower production rate. The lowest efficiency, 95.92% occurred during test 2 when the plant was operating at approximately 95% of design capacity. Figure V-7 is a plot of average control efficiency versus total mass loading for tests 1 through 11. The graph reveals that average control efficiency and total mass loading follow an inverse relationship. The graph also shows that the average control efficiencies during tests 9, 10 and 11 which are based on inlet concentration measurements made

FIGURE V-4. INSTANTANEOUS INLET AND OUTLET NO_X CONCENTRATIONS AND INTEGRATED OUTLET NO_X CONCENTRATION TEST - 2 (1010 TO 1408 3/6/75)

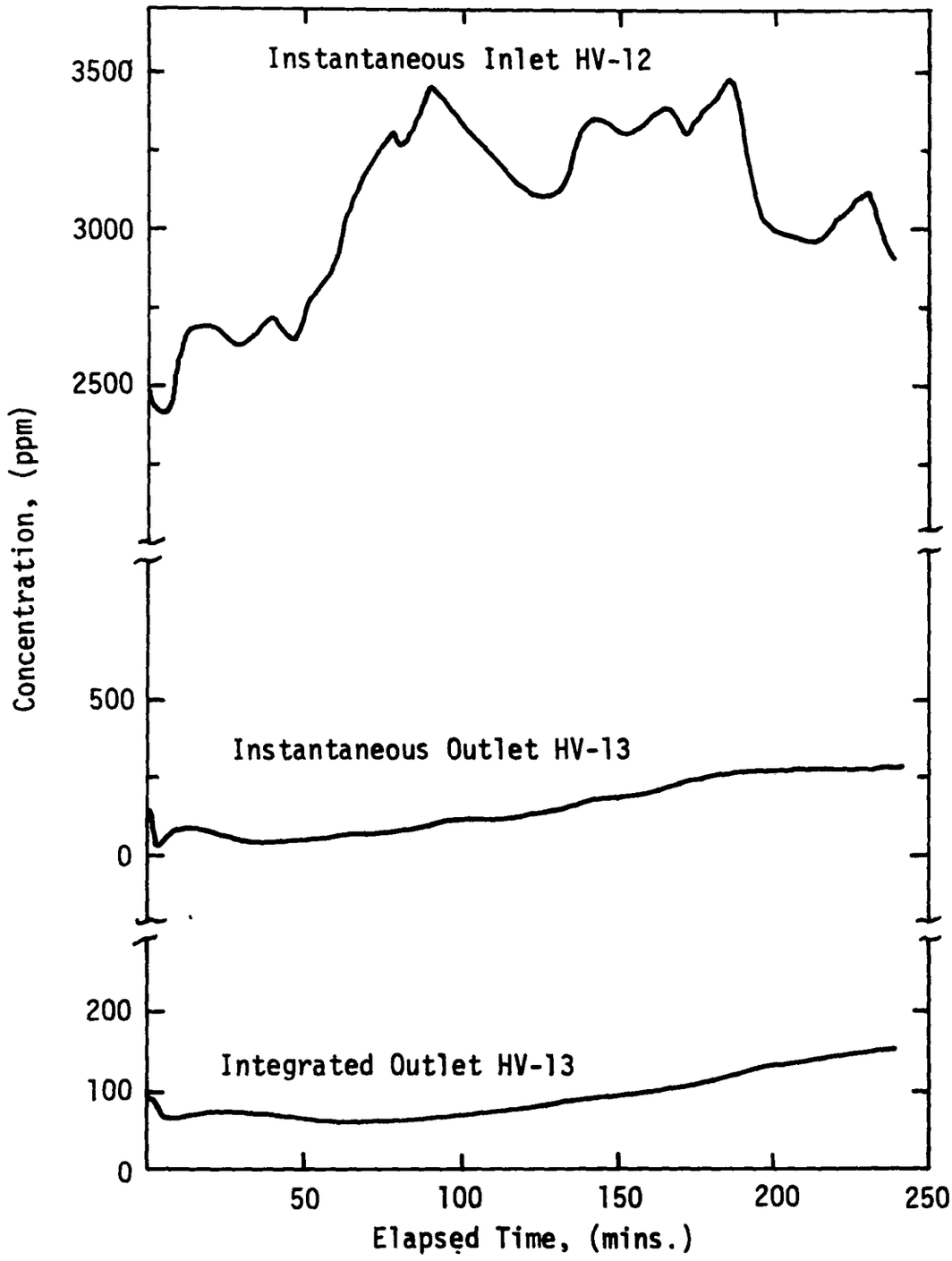

FIGURE V-5. INSTANTANEOUS INLET AND OUTLET NO_X CONCENTRATIONS AND INTEGRATED OUTLET NO_X CONCENTRATION TEST - 6 (2400 TO 1754 3/11/75)

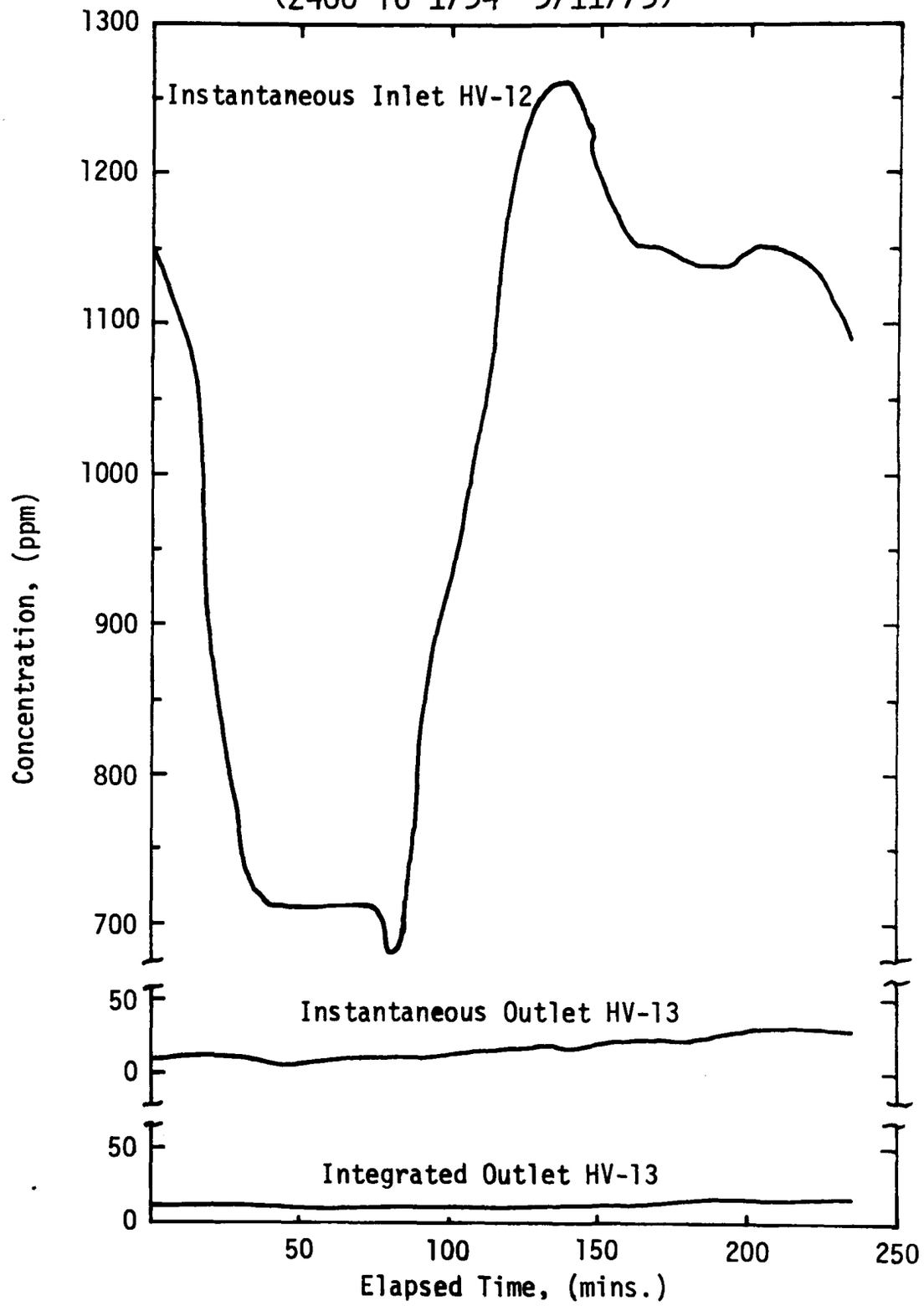

FIGURE V-6. INSTANTANEOUS INLET AND OUTLET NO_X CONCENTRATIONS AND INTEGRATED OUTLET NO_X CONCENTRATION TEST - 11 (0711 TO 1114 3/14/75)

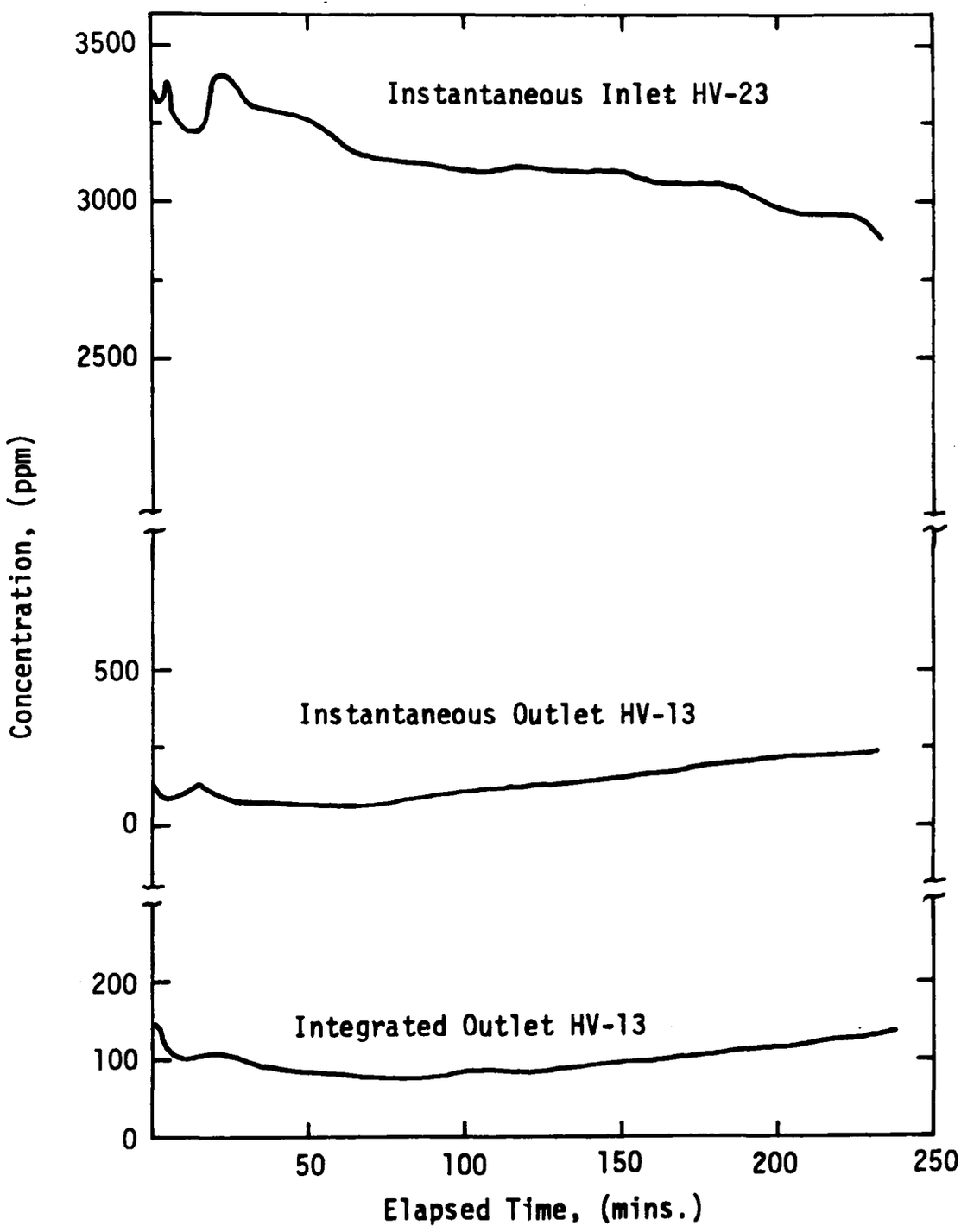

TABLE V-2. SUMMARY OF NO_X MASS LOADING, AVERAGE CONTROL EFFICIENCY AND AVERAGE CONCENTRATION OF NO_X EMITTED FOR INTERVALS DURING TEST--11

HERCULES INC., RUN 11, INLET HV-23, OUTLET HV-13 UNIT A 0711-1114 3/14/75

INTERVAL OF CYCLE (MIN)	NOX IN DURING INTERVAL (GRAMS)	NOX ADSORBED DURING INTERVAL (GRAMS)	NOX REGEN. DURING INTERVAL (GRAMS)	NOX EMITTED DURING INTERVAL (GRAMS)	PERCENT OF NOX ADSORBED DURING INTERVAL	PERCENT NOX FOR REGEN. DURING INTERVAL	PERCENT REDUC. OF NOX DURING INTERVAL	AVERAGE PPM OF NOX EMIT. DURING INTERVAL
0.0- 3.0	3021.0	2894.0	23.55	103.45	95.80	0.78	96.58	140
3.0- 4.0	1010.0	984.0	4.81	21.19	97.43	0.48	97.90	86
4.0- 6.0	2017.0	1968.6	8.93	39.45	97.60	0.44	98.04	80
6.0- 14.0	7880.9	7651.7	42.54	186.67	97.09	0.54	97.63	95
14.0- 15.0	969.3	933.8	6.62	28.90	96.34	0.68	97.02	118
15.0- 19.0	3964.2	3829.0	25.24	109.95	96.59	0.64	97.23	113
19.0- 23.0	4057.2	3948.2	20.41	88.66	97.31	0.50	97.81	91
23.0- 34.0	11034.0	10794.5	44.72	194.73	97.83	0.41	98.24	72
34.0- 39.0	4944.3	4850.2	17.53	76.54	98.10	0.35	98.45	62
39.0- 49.0	9843.5	9664.4	33.37	145.74	98.18	0.34	98.52	60
49.0- 59.0	9723.1	9548.5	32.53	142.07	98.20	0.33	98.54	58
59.0- 64.0	4778.7	4689.2	16.68	72.87	98.13	0.35	98.48	59
64.0- 79.0	14123.5	13808.2	58.89	256.38	97.77	0.42	98.18	70
79.0- 94.0	14033.2	13641.1	73.19	318.84	97.21	0.52	97.73	87
94.0- 97.0	2804.0	2716.4	16.32	71.28	96.88	0.58	97.46	97
97.0-109.0	11198.1	10813.4	71.67	313.04	96.56	0.64	97.20	106
109.0-124.0	14065.3	13519.0	101.79	444.57	96.12	0.72	96.84	121
124.0-139.0	14042.7	13435.4	113.14	494.17	95.68	0.81	96.48	134
139.0-154.0	13929.9	13259.3	124.92	545.61	95.19	0.90	96.08	148
154.0-160.0	5532.2	5243.9	53.84	234.47	94.79	0.97	95.76	160
160.0-169.0	8233.4	7773.3	86.31	373.75	94.41	1.05	95.46	171
169.0-184.0	13699.9	12852.2	158.99	688.68	93.81	1.16	94.97	189
184.0-199.0	13604.9	12661.0	176.23	767.67	93.06	1.30	94.36	210
199.0-214.0	13433.2	12419.5	188.85	824.84	92.45	1.41	93.86	224
214.0-220.0	5346.2	4926.3	78.23	341.69	92.15	1.46	93.61	232
220.0-229.0	7992.2	7348.7	119.87	523.56	91.95	1.50	93.45	238
229.0-243.0	12263.7	11239.6	190.79	833.29	91.65	1.56	93.21	243

TABLE V-3. CUMULATIVE NO_X MASS LOADING, AVERAGE CONTROL EFFICIENCY AND AVERAGE CONCENTRATION OF NO_X EMITTED DURING TEST--11

HERCULES INC., RUN 11, INLET HV-23, OUTLET HV-13 UNIT A 0711-1114 3/14/75

TIME INTO CYCLE (MIN)	TOTAL NOX IN (GRAMS)	TOTAL NOX ADS. (GRAMS)	NOX USED FOR REGEN. (GRAMS)	TOTAL NOX EMIT. (GRAMS)	% NOX REDUC. DUE TO ADS.	% NOX REDUC. DUE TO REGEN.	AVG. % REDUC. OF NOX	AVG. PPM OF NOX EMIT.
0								
3.0	3021.0	2894.0	23.6	103.5	95.80	0.78	96.58	140
4.0	4031.0	3878.0	28.4	124.6	96.20	0.70	96.91	126
6.0	6048.0	5846.6	37.3	164.1	96.67	0.62	97.29	111
14.0	13928.9	13498.3	79.8	350.8	96.91	0.57	97.48	102
15.0	14898.2	14432.1	86.4	379.7	96.87	0.58	97.45	103
19.0	18862.4	18261.1	111.7	489.6	96.81	0.59	97.40	105
23.0	22919.7	22209.3	132.1	578.3	96.90	0.58	97.48	103
34.0	33953.6	33003.8	176.8	773.0	97.20	0.52	97.72	93
39.0	38897.9	37854.0	194.3	849.6	97.32	0.50	97.82	89
49.0	48741.4	47518.4	227.7	995.3	97.49	0.47	97.96	83
59.0	58464.5	57066.8	260.2	1137.4	97.61	0.45	98.05	79
64.0	63243.2	61756.0	276.9	1210.2	97.65	0.44	98.09	77
79.0	77366.7	75564.2	335.8	1466.6	97.67	0.43	98.10	76
94.0	91399.8	89205.4	409.0	1785.4	97.60	0.45	98.05	78
97.0	94203.9	91921.8	425.3	1856.7	97.58	0.45	98.03	78
109.0	105401.9	102735.2	497.0	2169.8	97.47	0.47	97.94	81
124.0	119467.3	116254.2	598.8	2614.3	97.31	0.50	97.81	86
139.0	133510.0	129689.6	711.9	3108.5	97.14	0.53	97.67	91
154.0	147439.9	142948.9	836.8	3654.1	96.95	0.57	97.52	97
160.0	152972.1	148192.8	890.7	3888.6	96.88	0.58	97.46	99
169.0	161205.5	155966.2	977.0	4262.3	96.75	0.61	97.36	103
184.0	174905.4	168818.4	1136.0	4951.0	96.52	0.65	97.17	110
199.0	188510.3	181479.4	1312.2	5718.7	96.27	0.70	96.97	118
214.0	201943.5	193898.9	1501.1	6543.5	96.02	0.74	96.76	125
220.0	207289.6	198825.1	1579.3	6885.2	95.92	0.76	96.68	128
229.0	215281.8	206173.9	1699.2	7408.8	95.77	0.79	96.56	132
243.0	227545.5	217413.5	1890.0	8242.1	95.55	0.83	96.38	139

Table V-4. SUMMARY OF PERFORMANCE OF PURASIV-N MOLECULAR SIEVE

Test Number	Date	Time of Cycle	Bed on Absorb.	Inlet Sample Location	Total Mass of NO_x into Sieve over Cycle (grams)	Total Mass of NO_x Emitted over Cycle (grams)	Average Concentration of NO_x Emitted over Cycle (ppm)	Average Control Efficiency (%)
1	3/05/75	1412-1800	B	HV-12	184,680	6,670	112	96.39
2	3/06/75	1010-1408	B	HV-12	228,990	9,340	154	95.92
3	3/06/75	1408-1812	A	HV-12	212,030	8,110	136	96.18
4	3/07/75	0850-1255	B	HV-12	236,870	7,790	127	96.71
5	3/07/75	1255-1658	A	HV-12	168,030	6,000	99	96.43
6	3/11/75	1400-1754	A	HV-12	63,370	840	17	98.68
7	3/12/75	1002-1404	B	HV-12	136,970	2,850	63	97.92
8	3/12/75	1404-1806	A	HV-12	155,720	3,900	73	97.49
9	3/13/75	1017-1503	B	HV-23	235,260	6,060	98	97.42
10	3/13/75	1503-1905	A	HV-23	251,800	9,170	137	96.36
11	3/14/75	0711-1114	A	HV-23	227,550	8,240	139	96.38
Average		4 hr. 4 min.			178,716	5,865		96.72

NOTE: Tests 9, 10, and 11 are based on inlet test site HV-23.

FIGURE V-7. TOTAL MASS LOADING VERSUS AVERAGE CONTROL EFFICIENCY FOR TESTS 1-11

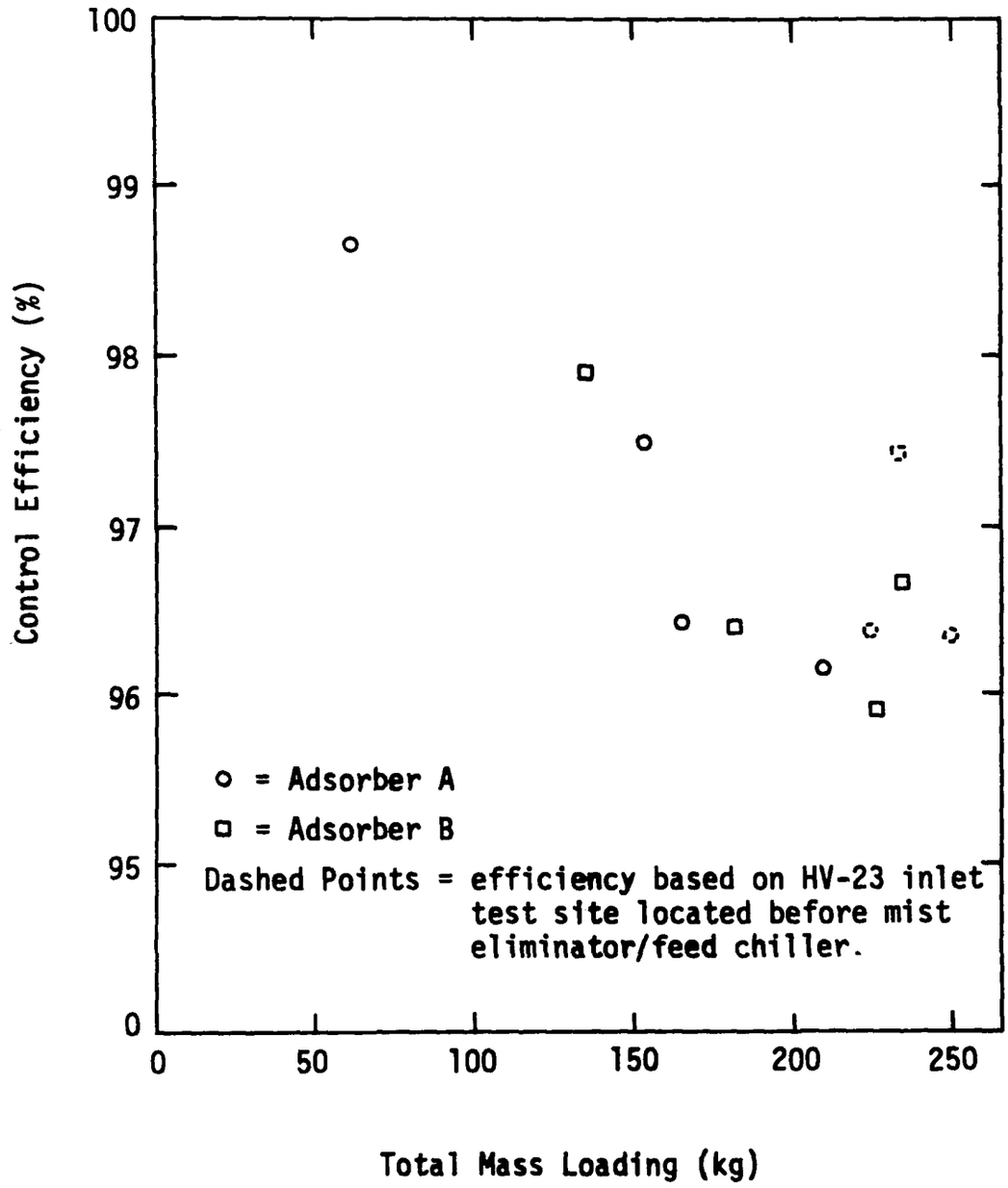

upstream of the feed chiller/mist eliminator are only marginally higher at best than efficiencies based on similar mass loading derived from concentrations measured after mist elimination. The existing scatter of the points makes definitive evaluation difficult.

The utility usage of the PuraSiv N unit is summarized in Tables V-5 and V-6. Table V-5 summarizes the regeneration heater fuel consumption. The average fuel consumption per regeneration cycle was 37.65 liters (9.95 gal.) of number 2 fuel oil.

Table V-6 summarizes the electrical power consumption of the PuraSiv N unit for each of the 11 cycles tested. The power consumed per cycle was not constant due to slight differences in the lengths of each cycle, and a variable demand by the brine refrigeration unit. (Cycle length varied slightly due to inconsistencies of the control timers.) In the case of test 9, the cycle was extended due to a malfunction of the regeneration heater. The major factor affecting power consumption during the cycles was the operation of the refrigeration unit. During tests 1, 3, 5, 7, 8 and 10 the refrigeration unit remained on throughout the entire cycle. During tests 2, 4, 6 and 9, the refrigeration unit cycled on and off for part of the cycle and during test 11, the refrigeration unit was cycling on and off throughout the whole cycle. When the refrigeration unit was off, electrical power consumption was cut nearly in half. Cycles 2, 4, 6, 9 and 11 were morning cycles when the outside ambient temperature was cooler and there was less load on the refrigeration unit. It was noted that the refrigeration unit began to cycle when ambient temperatures dropped below 10°C. Based on those cycles in which the unit operated continuously, the average power consumption during a four-hour cycle was 236.6 kilowatt hours.

Table V-5. FUEL CONSUMPTION OF REGENERATION HEATER

Period	Liters of No. 2 Fuel Oil Used	Number of Regen. Cycles	Liters per Cycle	10^3 Btu per Cycle
1300-3/5 to 1700-3/7	363.4	12	30.28	1088
1730-3/11 to 1000-3/14	690.8	16	43.18	1551
TOTAL	1054.2	28	Avg 37.65	1353

Table V-6. SUMMARY OF ELECTRICAL POWER USAGE OF PURASIV N SYSTEM DURING TESTS 1 - 11

Test	Cycle Length (Minutes)	Kilowatt Hours
1	228	224.9 (b)
2	238	235.7 (c)
3	244	241.7 (b)
4	245	215.2 (c)
5	243	226.6 (b)
6	234	223.5 (c)
7	242	237.8 (b)
8	242	241.3 (c)
9	286	283.8 (a)(c)
10	242	248.0 (b)
11	243	210.6 (d)

(a) Extended cycle due to malfunction of the regeneration heater.

(b) Refrigeration unit operating continuously during the cycle.

(c) Refrigeration unit cycling on and off during part of the cycle.

(d) Refrigeration unit cycling on and off during the entire cycle.

Treated water consumption measured from 0900 on 3/12/75 to 1100 on 3/14/75 was 943,771 liters, an average flow of 314.5 liters per minute. The flow rates computed for various time intervals within the 50 hour measuring period ranged from 199.1 to 334.2 liters per minute.

Tables V-7 through V-9 compare the NO_x concentrations measured using EPA Method 7 with the NO_x concentrations determined by the photometric analyzers. The EPA Method 7 NO_x samples were taken strictly for the purpose of providing a comparison between the two analytical methods, and were not intended to be used as a means of evaluating the efficiency of the molecular sieve process.

It is generally recognized that there are problems associated with EPA Reference Method 7 which include poor precision and an undemonstrated accuracy.[4][5] A more recent study has sited the method to be accurate at the 95 percent level of confidence.[6]

It must be recognized that both analytical methods do not measure exactly the same NO_x species. EPA Method 7 measures oxides of nitrogen species (NO, N_2O_3, NO_2, N_2O_4 and HNO_3) which are collected in an evacuated flask and oxidized to nitrate in the presence of hydrogen peroxide. The DuPont 411 Photometric Analyzer operated in the NO_x mode does not measure nitrates, but measures nitrogen dioxide and nitric oxide which is oxidized to nitrogen dioxide by oxygen added to the cell. Because EPA Method 7 is sensitive to nitrates, any nitric acid mist or nitric acid vapor present in the gas stream would be included in the analysis. The gas streams for both inlet test sites HV-12 and HV-23 contained moisture and were expected to contain nitric acid mist and vapor. More acid mist was expected to be present at site HV-23 which was located before the feed chiller and mist eliminator. The amount of nitric acid vapor in the inlet stream is dependent on the equilibrium vapor pressure of the nitric acid. The amount of nitric acid mist is now known.

Table V-7. COMPARISON OF INLET (HV-12) NO_X CONCENTRATIONS DETERMINED BY PHOTOMETRIC ANALYZER AND EPA METHOD NO. 7

Test	Date	Time	X Concentration by Photometric Analysis (ppm)	Y Concentration by Method No. 7 (ppm)	Δ Difference	%Δ Percentage Difference
1	3/05/75	1415	2080	2490	410	19.7
1	3/05/75	1447	2010	2270	260	12.9
1	3/05/75	1516	2550	3090	540	21.2
1	3/05/75	1545	2650	3040	390	14.7
1	3/05/75	1645	2930	3090	160	5.5
1	3/05/75	1745	2680	2160	-520	-19.4
2	3/06/75	1015	2410	2070	-340	-14.1
2	3/06/75	1115	3100	2840	-260	- 8.4
2	3/06/75	1215	3100	3270	170	5.5
2	3/06/75	1316	3450	3370	-080	- 2.3
3	3/06/75	1415	2910	2640	-270	- 9.3
3	3/06/75	1515	3350	3080	-270	- 8.1
3	3/06/75	1616	3340	2680	-660	-19.8
3	3/06/75	1715	2420	2630	210	- 8.7
4	3/07/75	0915	2800	2140	-660	-23.6
4	3/07/75	1015	1610	1800	190	11.8
4	3/07/75	1115	4150	4130	-020	- 0.5
4	3/07/75	1215	3910	4140	230	5.9
5	3/07/75	1316	2390	2820	430	18.0
5	3/07/75	1415	2050	2760	710	34.6
5	3/07/75	1517	2250	2710	460	20.4
5	3/07/75	1615	2200	2300	100	4.5

Table V-7. COMPARISON OF INLET (HV-12) NO_X CONCENTRATIONS DETERMINED BY PHOTOMETRIC ANALYZER AND EPA METHOD NO. 7 (cont'd)

Test	Date	Time	X Concentration by Photometric Analysis (ppm)	Y Concentration by Method No. 7 (ppm)	Δ Difference	%Δ Percentage Difference
5	3/07/75	1658	2310	2860	550	23.8
6	3/11/75	1415	1060	1080	020	1.9
6	3/11/75	1445	710	720	10	1.4
6	3/11/75	1515	710	1130	420	59.2
6	3/11/75	1545	970	1860	890	91.8
6	3/11/75	1620	1260	840	-420	-33.3
6	3/11/75	1645	1150	1090	-060	- 5.2
6	3/11/75	1715	1140	1580	440	38.6
6	3/11/75	1745	1130	1430	300	26.5
7	3/12/75	1023	2090	1440	-650	-31.1
7	3/12/75	1117	2590	2870	280	10.8
7	3/12/75	1215	2290	2850	560	24.4
7	3/12/75	1316	2280	2690	410	18.0
8	3/12/75	1430	2350	2400	50	2.1
8	3/12/75	1516	2280	2840	560	24.6
8	3/12/75	1615	2520	2800	280	11.1
8	3/12/75	1745	2590	2420	-170	- 6.6

$\overline{\%\Delta}$ = + 8.2 Standard Deviation = 23.6

$Y = 434 + 0.863\ X$

Where Y = Concentration by EPA Method No. 7
X = Concentration by Photometric Analyzer

Correlation Index = 0.788

Table V-8. COMPARISON OF INLET (HV-23) NO_x CONCENTRATIONS DETERMINED BY PHOTOMETRIC ANALYZER AND EPA METHOD NO. 7

Test	Date	Time	X Concentration by Photometric Analysis (ppm)	Y Concentration by Method No. 7 (ppm)	Δ Difference	%Δ Percentage Difference
9	3/13/75	1045	1800	2060	260	14.4
9	3/13/75	1130	1850	1580	-270	-17.1
9	3/13/75	1217	3020	3130	110	3.6
9	3/13/75	1315	3940	3800	-140	- 3.6
10	3/13/75	1530	2980	2510	-470	-15.8
10	3/13/75	1630	2990	2950	- 40	- 1.3
10	3/13/75	1730	3050	3480	430	14.1
10	3/13/75	1845	3580	3380	-200	- 5.6
11	3/14/75	0745	3290	3040	-250	- 7.6
11	3/14/75	0845	3110	3670	560	18.0
11	3/14/75	0945	3080	2530	-550	-17.9
11	3/14/75	1045	2960	2840	-120	- 4.1

$\overline{\%\Delta}$ = - 1.9 Standard Deviation = 12.3

Y = 151 + .739 X

Where Y = Concentration by EPA Method No. 7

X = Concentration by Photometric Analyzer

Correlation Index = 0.738

Table V-9. COMPARISON OF OUTLET (HV-13) NO_X CONCENTRATIONS DETERMINED BY PHOTOMETRIC ANALYZER AND EPA METHOD NO. 7

Test	Date	Time	X Concentration by Photometric Analysis (ppm)	Y Concentration by Method No. 7 (ppm)	Δ Difference	%Δ Percentage Difference
1	3/05/75	1420	80	67	- 13	-16.3
1	3/05/75	1454	64	81	17	26.6
1	3/05/75	1520	81	71	- 10	-12.3
1	3/05/75	1550	91	87	- 4	- 4.4
1	3/05/75	1650	135	143	8	5.3
1	3/05/75	1750	179	157	- 22	-12.3
2	3/06/75	1021	88	101	13	14.7
2	3/06/75	1120	71	49	- 22	-31.0
2	3/06/75	1220	145	89	- 56	-38.6
2	3/06/75	1320	268	131	-137	-51.1
3	3/06/75	1420	186	161	- 25	-13.4
3	3/06/75	1520	92	82	- 10	-10.9
3	3/06/75	1621	93	99	6	6.5
4	3/07/75	0921	64	35	- 29	-45.3
4	3/07/75	1021	56	29	- 27	-48.2
4	3/07/75	1121	150	140	- 10	- 6.7
4	3/07/75	1220	232	156	- 76	-32.8
5	3/07/75	1320	96	58	- 38	-39.6
5	3/07/75	1420	64	81	17	26.5
5	3/07/75	1524	95	62	- 33	-34.7
5	3/07/75	1620	125	130	5	4.0
5	3/07/75	1654	139	94	- 45	-32.4

Table V-9. COMPARISON OF OUTLET (HV-13) NO_X CONCENTRATIONS DETERMINED BY PHOTOMETRIC ANALYZER AND EPA METHOD NO. 7 (cont'd)

Test	Date	Time	X Concentration by Photometric Analysis (ppm)	Y Concentration by Method No. 7 (ppm)	Δ Difference	%Δ Percentage Difference
6	3/11/75	1420	10	40	30	300.0
6	3/11/75	1450	6	8	2	33.3
6	3/11/75	1520	10	11	1	10.0
6	3/11/75	1550	14	96	82	585.0
6	3/11/75	1645	21	23	2	8.7
6	3/11/75	1721	29	23	- 6	- 20.7
6	3/11/75	1750	29	26	- 3	- 10.3
7	3/12/75	1028	66	54	- 12	- 18.2
7	3/12/75	1120	61	49	- 12	- 19.7
7	3/12/75	1220	59	65	6	10.2
8	3/12/75	1430	58	46	- 12	- 20.7
8	3/12/75	1520	51	49	- 2	- 3.9
8	3/12/75	1620	72	86	14	19.4
8	3/12/75	1720	91	101	10	11.0
9	3/13/75	1049	45	42	- 3	6.7
9	3/13/75	1135	30	36	6	20.0
9	3/13/75	1200	44	64	20	45.5
9	3/13/75	1325	124	112	- 12	- 9.6
10	3/13/75	1535	56	58	2	3.6
10	3/13/75	1635	85	101	16	18.8
10	3/13/75	1735	146	46	-100	- 68.5
10	3/13/75	1850	261	92	-169	- 64.7

Table V-9. COMPARISON OF OUTLET (HV-13) NO_X CONCENTRATIONS DETERMINED BY PHOTOMETRIC ANALYZER AND EPA METHOD NO. 7 (cont'd)

Test	Date	Time	X Concentration by Photometric Analysis (ppm)	Y Concentration by Method No. 7 (ppm)	Δ Difference	%Δ Percentage Difference
11	3/14/75	0750	61	67	6	9.8
11	3/14/75	0850	101	92	- 9	- 8.9
11	3/14/75	0951	164	204	40	24.4
11	3/14/75	1050	235	228	- 7	- 3.0

$\overline{\%\Delta}$ = 10.7 Standard Deviation = 98.91

Y = 27.4 + 0.576 X

Where Y = Concentration by EPA Method No. 7
X = Concentration by Photometric Analysis

Correlation Index = 0.601

Excluding the values with deviations of 300 and 585% (during test 6)

$\overline{\%\Delta}$ = -8.0 Standard Deviation = 25.93

Y = 22.97 + 0.607X

Correlation Index = 0.6311

Because the EPA Method 7 samples cannot be taken isokinetically it is impossible to estimate the contribution of nitric acid mist to the measured NO_x concentrations. At the outlet site, both methods would be expected to be measures of the same thing, since NO_2 is the only expected species.

The tables comparing the results determined by the two methods are categorized according to the molecular sieve test sites, HV-12, HV-23 and HV-13. In all three tables the difference and the percent difference between the concentrations measured by EPA Method 7 and the photometric analyzer have been computed.

Also, for each of the test sites, the mean and standard deviation of the percent difference between the determinations have been calculated. A linear relationship was assumed between the concentrations determined by both methods and regression analysis was performed using the method of least squares. The multiple correlation coefficient for the methods was computed for each test site.

For the inlet test site, HV-12, the percent differences ranged from -23.6% to +91.8%. The mean percent difference was +8.2% and the standard deviation was 23.6%. For inlet test site HV-23 the range of percent difference -17.9% to +18%, was narrower than for inlet test site HV-12. The mean percent difference was -1.9% and the standard deviation was 12.3%. The outlet test site, HV-13 had the largest range of percent difference between the results of the two methods, -68.5% to +585%. The mean percent difference was +10.7% and the standard deviation was 98.91%. It is apparent however, that the two Method 7 results with deviations of 300 and 585% are outliers. By eliminating these two values, the range becomes -68.5% to +45.5%, the mean percent difference becomes -8.0% and the standard deviation becomes 25.93%. This larger range is at least partially due to the fact that there are greater relative errors in the Method 7 analytical procedures at low concentrations.

EPA Method 7 results correlated more highly with the photometric results at the inlet sites than the outlet site. The correlation indexes for the inlet sites were 0.788 and 0.738 for HV-12 and HV-13 respectively. For the outlet site, the correlation index was 0.601.

Table V-10 lists the results of three determinations of each of the NO_2 calibration gases by EPA Method 7.

For the low concentration calibration gas standard, EPA Method 7 yielded an average result which was 26% higher than the vendors determination. The Method 7 analysis for the higher concentration standard, excluding determination number 1, averaged only 3% higher than the vendors determination.

In summary there was a better agreement between the concentrations measured by the DuPont 411 Photometric Analyzer and EPA Method 7 for the inlet test sites than for the outlet site. The EPA Method 7 results for the inlet test sites in most cases collaborated with measurements made using the DuPont analyzer. For inlet site HV-12, 67% of the Method 7 results were within $\pm$ 20% of the DuPont analyzer, and 92% were within $\pm$ 35%. For inlet site HV-23, 100% of the Method 7 results were within $\pm$ 20% of the DuPont analyzer measurements. Analysis of the inlet instrument calibration gas by EPA Method 7 further verified the agreement between the two methods. The average of two determinations of the inlet standard using Method 7 was only 3% higher than the vendors analysis. (The result of a first determination of the inlet standard by EPA Method 7 was eliminated because it was suspected that the sampling line was improperly purged.) It is believed that the differences between the results of the two methods of measurement are due primarily to the lack of precision of EPA Method 7. The within-lab coefficient of variation estimate for replicate single determinations by Method 7 has been sited as being 14.88%[6]. Because the test procedures used in the study at Hercules

Table V-10. RESULTS OF EPA METHOD 7 ANALYSIS OF CALIBRATION GASES

Calibration Gas Concentration (ppm NO_2 + NO)	Analysis No.	Concentration by EPA Method No. 7 (ppm NO_x)
32.5	1	40
	2	39
	3	43
	Avg.	41
3970	1	2700
	2	4167
	3	4030
	Avg. of No. 2 & 3	4098

did not involve the taking of replicate measurements using Method 7, no within-lab coefficient of variation estimate for these tests has been calculated. Estimation of the within-lab coefficient by any other means is considered beyond the scope of this study.

The EPA Method 7 results for the outlet test site corroborated with the DuPont analyzer results, but did so in fewer cases than for the inlet sites. When the two outlier values with deviations of 300 and 585% were excluded, 61% of the outlet Method 7 measurements were within ± 20% of the DuPont analyzer results and 83% were within ± 35%. Again it is believed that the differences between the results of the two methods are due primarily to the lack of precision of EPA Method 7.

REFERENCE LIST

(1) "A Continuous Analyzer for Detecting Nitric Acid", David F. Miller and Chester W. Spicer, presented at the 67th Annual Air Pollution Control Association Meeting, June, 1974.

(2) "Preparation of Stable Pollution Gas Standards Using Treated Aluminum Cylinders", Stephen G. Wechter, presented at the ASTM Calibration Symposium at Boulder, Colorado on August 5, 1975.

(3) "Gas Standards, How Standard Are They?", Stephen G. Wechter and Henry A. Grieco, presented at the ASTM Calibration Symposium at Boulder, Colorado on August 7, 1975

(4) Collaborative Study of Method For The Determination of Nitrogen Oxide Emissions From Stationary Sources. EPA Report 6501/4-74-025, 1973.

(5) An Improved Manual Method for NO_x Emission Measurement. EPA Report R2-72-067, 1972.

(6) Collaborative Study of Method For The Determination of Nitrogen Oxide Emissions From Stationary Sources. EPA Report 650/4-74-028, 1974.

TECHNICAL REPORT DATA
(Please read Instructions on the reverse before completing)

1. REPORT NO. EPA-600/2-76-048a	2.	3. RECIPIENT'S ACCESSION NO.
4. TITLE AND SUBTITLE Molecular Sieve Tests for Control of NOx Emissions from a Nitric Acid Plant; Volume I		5. REPORT DATE March 1976
		6. PERFORMING ORGANIZATION CODE
7. AUTHOR(S) John T. Chehaske and Jonathan S. Greenberg		8. PERFORMING ORGANIZATION REPORT NO.
9. PERFORMING ORGANIZATION NAME AND ADDRESS Engineering-Science, Inc. 7903 Westpark Drive McLean, Virginia 22101		10. PROGRAM ELEMENT NO. 1AB015; ROAP 21AFA-106
		11. CONTRACT/GRANT NO. 68-02-1406, Task 2
12. SPONSORING AGENCY NAME AND ADDRESS EPA, Office of Research and Development Industrial Environmental Research Laboratory Research Triangle Park, NC 27711		13. TYPE OF REPORT AND PERIOD COVERED Task Final; 11/74-12/75
		14. SPONSORING AGENCY CODE EPA-ORD

15. SUPPLEMENTARY NOTES Project officer for this report is E.J. Wooldridge, Ext 2547.

16. ABSTRACT The report gives results of performance testing for NOx emission control on Union Carbide's PuraSiv N unit, now controlling emissions from the tail gas stream of the ammonia oxidation nitric acid production facility of Hercules, Inc. in Bessemer, Alabama. Simultaneous measurements of NO2/NOx concentrations were performed in the PuraSiv N inlet and outlet streams during 11 individual 4-hour adsorption cycles, using continuous photometric analyzers. NOx concentrations were also measured at the test sites, using the EPA Method 7 reference procedure, to provide comparative data. Total NOx mass loading to the sieve was variable from cycle to cycle, ranging from 63,370 to 251,800 grams, reported as NO2. Average efficiency of the control unit for the cycles tested ranged from 98.68 to 95.92%. The integrated average concentrations of NOx emitted over the complete cycles ranged from 17 to 154 ppm.

17. KEY WORDS AND DOCUMENT ANALYSIS

a. DESCRIPTORS	b. IDENTIFIERS/OPEN ENDED TERMS	c. COSATI Field/Group
Air Pollution	Air Pollution Control	13B
Nitric Acid	Stationary Sources	07B
Chemical Plants	Molecular Sieves	07A
Absorbers (Materials)	Ammonia Oxidation	11G
Nitrogen Oxides	Tail Gas	
Adsorption	PuraSiv N	

18. DISTRIBUTION STATEMENT Unlimited	19. SECURITY CLASS *(This Report)* Unclassified	21. NO. OF PAGES 68
	20. SECURITY CLASS *(This page)* Unclassified	22. PRICE

EPA Form 2220-1 (9-73)