EPA-600/2-76-101
April 1976

Environmental Protection Technology Series

EVALUATION OF POLLUTION CONTROL IN FOSSIL FUEL CONVERSION PROCESSES: Final Report

Industrial Environmental Research Laboratory
Office of Research and Development
U.S. Environmental Protection Agency
Research Triangle Park, North Carolina 27711

RESEARCH REPORTING SERIES

Research reports of the Office of Research and Development, U.S. Environmental Protection Agency, have been grouped into five series. These five broad categories were established to facilitate further development and application of environmental technology. Elimination of traditional grouping was consciously planned to foster technology transfer and a maximum interface in related fields. The five series are:

1. Environmental Health Effects Research
2. Environmental Protection Technology
3. Ecological Research
4. Environmental Monitoring
5. Socioeconomic Environmental Studies

This report has been assigned to the ENVIRONMENTAL PROTECTION TECHNOLOGY series. This series describes research performed to develop and demonstrate instrumentation, equipment, and methodology to repair or prevent environmental degradation from point and non-point sources of pollution. This work provides the new or improved technology required for the control and treatment of pollution sources to meet environmental quality standards.

EPA REVIEW NOTICE

This report has been reviewed by the U.S. Environmental Protection Agency, and approved for publication. Approval does not signify that the contents necessarily reflect the views and policy of the Agency, nor does mention of trade names or commercial products constitute endorsement or recommendation for use.

This document is available to the public through the National Technical Information Service, Springfield, Virginia 22161.

EPA-600/2-76-101
April 1976

EVALUATION OF POLLUTION CONTROL IN FOSSIL FUEL CONVERSION PROCESSES

FINAL REPORT

by

E.M. Magee

Exxon Research and Engineering Company
P.O. Box 8
Linden, New Jersey 07036

Contract No. 68-02-0629
ROAP No. 21ADD-023
Program Element No. 1AB013

EPA Project Officer: William J. Rhodes

Industrial Environmental Research Laboratory
Office of Energy, Minerals, and Industry
Research Triangle Park, NC 27711

Prepared for

U.S. ENVIRONMENTAL PROTECTION AGENCY
Office of Research and Development
Washington, DC 20460

TABLE OF CONTENTS

		Page
	ACKNOWLEDGEMENTS	
1.	INTRODUCTION	1
	1.1 Background	1
	1.2 Literature Survey	2
	1.2.1 Trace Elements in Fossil Fuels	2
	1.2.2 Coal and Crude Oil Conversion/Treatment Processes	2
	1.3 Discussion with Process Developers	3
	1.4 Trips to Commercial Plants	3
	1.5 Preliminary Process Designs	3
	1.6 Analytical Test Plan	4
	1.7 Transient Pollutants	4
2.	COAL GASIFICATION PLANTS	7
	2.1 General Gasification Description	7
	2.2 Coal Storage and Preparation	11
	2.2.1 Description of Coal Storage and Preparation	11
	2.2.2 Effluents to Air from Coal Storage and Preparation	14
	2.2.3 Liquids and Solids Effluents from Coal Storage and Preparation	15
	2.2.4 Process Alternatives	15
	2.3 Gasification and Quench Sections	16
	2.3.1 Gasifiers and Operating Conditions	16
	2.3.2 Gasifier Effluents to Air	18
	2.3.3 Liquid and Solid Effluents	18
	2.3.4 Process Alternatives	18
	2.4 Shift Conversion and Cooling	23
	2.4.1 Description of Shift Conversion	23
	2.4.2 Effluents to Air from Shift Conversion and Cooling	23
	2.4.3 Liquids and Solid Effluents from Shift Conversion and Cooling	24
	2.4.4 Process Alternatives in Shift Conversion and Cooling	24
	2.5 Acid Gas Removal	24
	2.5.1 Description of Acid Gas Removal	24
	2.5.2 Effluents to Air From Acid Gas Removal	28
	2.5.3 Liquids and Solid Effluents from Acid Gas Removal	28
	2.5.4 Process Alternatives in Acid Gas Removal	28

TABLE OF CONTENTS (Cont'd)

Page

2.6 Methanation Section. 29

2.6.1 Description of the Methanation Section. 29
2.6.2 Effluents to Air From the Methanation Section . . . 30
2.6.3 Liquids and Solid Effluents 30
2.6.4 Process Alternatives in Methanation 30

2.7 Compression and Drying 30

2.8 Final Product Gas. 31

2.9 Oxygen Plants. 31

2.10 Sulfur Recovery. 31

2.10.1 Description of Sulfur Recovery. 31
2.10.2 Effluents from Sulfur Recovery. 34

2.11 Ash and Solids Disposal. 36

2.11.1 Description of Ash and Solids Disposal. 36
2.11.2 Effluents to Air from Solids Disposal 36
2.11.3 Liquids and Solids Effluent from Solids Disposal. . 36
2.11.4 Process Alternatives in Solids Disposal 38

2.12 Wastewater Treatment 38

2.13 Power and Steam Generation 43

2.13.1 Alternatives in Power and Steam Generation. 43
2.13.2 Effluents from Power and Steam Generation 45

2.14 Cooling Water System 45

2.15 Raw Water Treatment. 48

2.16 Miscellaneous Plant Sections 48

2.16.1 CO_2 Acceptor Regeneration 48
2.16.2 Low Btu Fuel Gas Production in the Lurgi Process. . 48
2.16.3 Low Btu Fuel Gas Production in the HYGAS Process. . 51

3. COAL LIQUEFACTION PLANTS. 55

3.1 General Description of Coal Liquefaction Plants. 55

3.2 Main Liquefaction Train. 57

3.2.1 Coal Storage and Preparation. 57
3.2.2 Coal Liquefaction 57
3.2.3 Products Separation 64
3.2.4 Hydrotreating 64

3.3 Hydrogen Production. 64

TABLE OF CONTENTS (Cont'd)

	Page
3.4 Auxiliary Facilities	68
3.4.1 Oxygen Plants	68
3.4.2 Acid Gas Removal	68
3.4.3 Sulfur Recovery	72
3.4.4 Ash and Solids Disposal	72
3.4.5 Wastewater Treatment	72
3.4.6 Electricity and Steam Generation	72
3.4.7 Cooling Water System	77
3.4.8 Raw Water Treatment	77
3.5 Products from Liquefaction Plants	77
3.6 Miscellaneous Facilities	77
4. COAL TREATING	87
4.1 Description of the Meyers Process	87
4.2 Feed, Products, Utilities and Effluents of the Meyers Process	87
5. THERMAL EFFICIENCY	92
5.1 General	92
5.2 Non-Process Related Factors Affecting Thermal Efficiency	92
5.3 Thermal Efficiencies of Processes Investigated	94
5.4 Detailed Losses in Thermal Efficiency	94
6. STREAM ANALYSIS FOR TRACE ELEMENTS AND OTHER POTENTIAL POLLUTANTS	99
6.1 General	99
6.2 The Fate of Trace Elements in Coal Conversion	99
6.2.1 Trace Elements in Coals	99
6.2.2 Trace Elements in Coal Feed to Processes in this Study	105
6.2.3 Fate of Trace Elements in Coal	105
6.3 Trace Elements in Petroleum and Shale	108
6.3.1 Correlations Indicated	108
6.3.2 New Data Required	109
6.4 Trace Compounds Formed in Coal Conversion	109

TABLE OF CONTENTS (Cont'd)

Page

6.5 Data Acquisition. 113

6.5.1 Analyses to Be Made. 113
6.5.2 Analytical Techniques. 113
6.5.3 Coal Conversion Streams to Be Sampled. 113

6.6 Analysis of Streams from Commercial and Development Scale Gasification Plants 121

7. TECHNOLOGY NEEDS 133

7.1 Trace Elements in Coal. 133

7.2 Trace Elements and Other Potential Pollutants in Coal Conversion 134

7.3 Improvements in Thermal Efficiency. 135

8. TRANSIENT POLLUTANTS 137

8.1 General 137

8.2 Startup 138

8.3 Shutdown. 143

8.4 Upsets. 153

8.4.1 General. 153
8.4.2 Coal Storage and Preparation 154
8.4.3 Crushing and Screening 155
8.4.4 Drying 155
8.4.5 Pretreatment 156
8.4.6 Coal Conversion. 158

8.4.6.1 Gasification. 158
8.4.6.2 Liquefaction. 160

8.4.7 Shift and Cooling. 162
8.4.8 Acid Gas Removal 163
8.4.9 Methanation, Compression and Drying. 164
8.4.10 Sulfur Plant 165
8.4.11 Oxygen Plant 166
8.4.12 Solids Disposal. 167
8.4.13 Water Treating 167
8.4.14 Steam and Power Supply 172

8.5 Maintenance 174

8.6 Chemicals and Catalyst Replacement. 175

8.7 Storage of Products and Byproducts. 176

8.8 Design Considerations 176

9. BIBLIOGRAPHY 179

TABLE OF CONTENTS (Cont'd)

APPENDICES — Page

A. PROCESS DESCRPTIONS - GASIFICATION. 187

A.1 Koppers-Totzek Process 187

A.1.1 General 187
A.1.2 Main Gasification Stream. 187

A.1.2.1 Coal Preparation 187
A.1.2.2 Gasifier 189
A.1.2.3 Gas Cleaning 190
A.1.2.4 Acid Gas Removal 190

A.1.3 Auxiliary Facilities. 190

A.1.3.1 Oxygen Plant 190
A.1.3.2 Sulfur Plant 190
A.1.3.3 Utilities. 191

A.2 Synthane Process 192

A.2.1 General 192
A.2.2 Main Gasification Stream. 192

A.2.2.1 Coal Preparation and Storage 192
A.2.2.2 Coal Grinding. 194
A.2.2.3 Gasification 194

A.2.2.3.1 Coal Feed System. 194
A.2.2.3.2 Char Letdown. 196

A.2.2.4 Dust Removal 197
A.2.2.5 Shift Conversion 199
A.2.2.6 Waste Heat Recovery. 199
A.2.2.7 Light Hydrocarbon Removal. 199
A.2.2.8 Gas Purification 199
A.2.2.9 Residual Sulfur Cleanup. 200
A.2.2.10 Methanation. 201
A.2.2.11 Final Methanation. 201
A.2.2.12 Final Compression. 201

A.2.3 Auxiliary Facilities. 201

A.2.3.1 Oxygen Plant 201
A.2.3.2 Sulfur Plant 202
A.2.3.3 Utilities. 202

A.2.3.3.1 Power and Steam Generation. . . 202
A.2.3.3.2 Cooling Water 203
A.2.3.3.3 Waste Water Treatment 203

TABLE OF CONTENTS (Cont'd)

APPENDICES — Page

A.3 Lurgi Process 204

A.3.1 General 204
A.3.2 Main Gasification Stream 204

A.3.2.1 Coal Storage and Pretreatment 204
A.3.2.2 Gasification 206
A.3.2.3 Tar Separation 207
A.3.2.4 Shift Conversion 207
A.3.2.5 Gas Purification 208
A.3.2.6 Methanation 208
A.3.2.7 Compression and Dehydration 208

A.3.3 Auxiliary Facilities 209

A.3.3.1 Oxygen Plant 209
A.3.3.2 Sulfur Plant 209
A.3.3.3 Incineration 210
A.3.3.4 Power and Steam Production 210
A.3.3.5 Raw Water Treatment 210
A.3.3.6 Gas Liquor Treatment and Effluent Water Treatment 212
A.3.3.7 Ash Disposal 213

A.4 CO_2 Acceptor Process 213

A.4.1 General 213
A.4.2 Main Gasification Stream 213

A.4.2.1 Coal Preparation 213
A.4.2.2 Gasifier 215
A.4.2.3 Gas Cleaning 215
A.4.2.4 Acid Gas Removal 216
A.4.2.5 Methanation and Compression 216
A.4.2.6 Regenerator 216
A.4.2.7 Ash Desulfurizer 217

A.4.3 Auxiliary Facilities 217

A.4.3.1 Sulfur Plant 217
A.4.3.2 Utilities 218

A.5 BIGAS Process 219

A.5.1 General 219
A.5.2 Main Gasification Stream 219

A.5.2.1 Coal Preparation and Drying 219
A.5.2.2 Gasification 221
A.5.2.3 Quench and Dust Removal 221
A.5.2.4 Shift Conversion 221
A.5.2.5 Acid Gas Removal 222
A.5.2.6 Methanation and Drying 222

A.5.3 Auxiliary Facilities 223

TABLE OF CONTENTS (Cont'd)

APPENDICES Page

A.6 HYGAS Process. 223

A.6.1 General 223
A.6.2 Main Gasification Stream. 224

A.6.2.1 Coal Preparation 224
A.6.2.2 Gasification 224
A.6.2.3 Quench and Dust Removal. 226
A.6.2.4 Shift Conversion and Cooling 226
A.6.2.5 Acid Gas Treatment 226
A.6.2.6 Methanation and Drying 227

A.6.3 Auxiliary Facilities. 228

A.7 U-Gas Process. 229

A.7.1 General 229
A.7.2 Main Gasification Stream. 229
A.7.3 Auxiliary Facilities. 231

A.8 Winkler Process. 232

A.8.1 General 232
A.8.2 Main Gasification Stream. 232

A.8.2.1 Coal Preparation 232
A.8.2.2 Gasification 234
A.8.2.3 Gas Cooling and Dust Removal 234
A.8.2.4 Sulfur Removal 235

A.8.3 Auxiliary Facilities. 235

B. PROCESS DESCRIPTIONS - LIQUEFACTION 237

B.1 COED Process 237

B.1.1 General 237
B.1.2 Main Gasification Stream. 237

B.1.2.1 Coal Storage and Preparation 237

B.1.2.1.1 Coal Storage. 237
B.1.2.1.2 Coal Grinding 240

B.1.2.2 Coal Drying and First Stage Pyrolysis. . . 241
B.1.2.3 Stages 2, 3, 4 Pyrolysis 242
B.1.2.4 Product Recovery System. 243
B.1.2.5 COED Oil Filtration. 243
B.1.2.6 Hydrotreating. 244

B.1.3 Hydrogen Plant. 245

TABLE OF CONTENTS (Cont'd)

APPENDICES — Page

B.1.4 Auxiliary Facilities 246

B.1.4.1 Oxygen Plant. 246
B.1.4.2 Acid Gas Removal. 246
B.1.4.3 Sulfur Plant. 247
B.1.4.4 Utilities 248

B.1.4.4.1 Power and Steam Generation . . 248
B.1.4.4.2 Cooling Water. 250
B.1.4.4.3 Water Treatment. 251

B.2 SRC Process 252

B.2.1 General. 252
B.2.2 Main Liquefaction Stream 252

B.2.2.1 Coal Storage and Preparation. 252
B.2.2.2 Slurry Formation and Liquefaction 254
B.2.2.3 Hydrotreating 254

B.2.3 Acid Gas Removal 255
B.2.4 Hydrogen Manufacture 255
B.2.5 Gasification and Slag Disposal 255
B.2.6 Auxiliary Facilities 256

B.3 H-Coal Process. 259

B.3.1 General. 259
B.3.2 Main Liquefaction Stream 261

B.3.2.1 Coal Preparation and Feeding. 261
B.3.2.2 Liquefaction Section. 261
B.3.2.3 Gas Separation and Cleanup. 262
B.3.2.4 Liquid Product Recovery 262

B.3.3 Hydrogen Manufacture 262
B.3.4 Auxiliary Facilities 263

C. PROCESS DESCRIPTIONS - COAL TREATING 266

C.1 Meyers Process. 266

C.1.1 General. 266
C.1.2 Main Process Streams 266

C.1.2.1 Coal Storage and Preparation. 266
C.1.2.2 Reactor Section 266
C.1.2.3 Sulfur Removal Section. 268
C.1.2.4 Product Drying Section. 268
C.1.2.5 Sulfur Recovery Section 269
C.1.2.6 Iron Sulfate Recovery Section 269

C.1.3 Auxiliary Facilities 269

TABLE OF CONTENTS (Cont'd)

APPENDICES Page

D. TRACE ELEMENTS IN PETROLEUM AND SHALE 271

D.1 Domestic Crude Oils 271

D.1.1 Sulfur and Nitrogen Data 271
D.1.2 Other Trace Element Data 272

D.2 Shale Oil 288

E. TABLE OF CONVERSION UNITS 292

LIST OF TABLES

No.		Page
1	Gasification Processes for Which Designs Were Made. . . .	8
2	Reactions in Gasifier	10
3	Coal Preparation and Storage Operations-Gasification. . .	12
4	Coal Analyses - Gasification.	13
5	Gasifier Descriptions and Operating Conditions.	17
6	Inputs to Gasifiers	19
7	Raw, Dry Gas from Gasifiers and Quench.	20
8	Other By-Products from Gasifier and Quench.	21
9	Char Analysis	22
10	Sour Water from Shift Conversion, Cooling and Scrubbing .	25
11	Acid Gas Removal.	27
12	Net Dry Product Gas	32
13	Gasification Process Oxygen Requirements.	33
14	Sulfur Recovery in Gasification Systems	35
15	Solid Gasifier Product.	37
16	Classification of Wastewater Treatment Methods.	40
17	Dirty Water Treatment Systems of Gasification Plants. . .	41
18	Generation of Steam and Electricity in Gasification Plants	44
19	Effluents from Steam and Electricity Generation	46
20	Cooling Water Requirements and Effluents in Gasification.	47
21	Raw Water Treatment in Gasification	49
22	Feed and Effluents of the CO_2 Acceptor Regeneration Section.	50
23	Disposition of the Low Btu Fuel Gas in the Lurgi Process	52

LIST OF TABLES (Cont'd)

No.		Page
24	Inputs and Outputs of the Lurgi Low Btu Gasification System.	53
25	Major Inputs and Outputs of the Low Btu Gasification Plant Used in the HYGAS Process	54
26	Coal Storage and Preparation Operations - Liquefaction .	58
27	Coal Analysis - Liquefaction	59
28	Coal Drying.	60
29	Liquefaction Descriptions and Operating Conditions . . .	61
30	Inputs to Liquefaction Reactors.	62
31	Outputs from Liquefaction Reactors	63
32	Raw Product to Product Separation.	65
33	Input Streams to Hydrotreating	66
34	Output Streams from Hydrotreating.	67
35	Input Streams to Hydrogen Production	69
36	Output Streams from Hydrogen Production.	70
37	Oxygen Requirements - Liquefaction Processes	71
38	Liquefaction Acid Gas Removal Facilities	73
39	Sulfur Recovery in Liquefaction Systems.	74
40	Wastewater Treatment for Liquefaction Plants	75
41	Generation of Steam and Electricity in Liquefaction Plants.	76
42	Effluents from Steam and Electricity Production in Liquefaction.	78
43	Cooling Water Requirements and Effluents from Liquefaction.	79
44	Raw Water Treatment in Liquefaction.	80
45	COED Syncrude Properties	81
46	SRC Process - Major Streams from Plant	82

LIST OF TABLES (Cont'd)

No.		Page
47	Liquid Product from H-Coal Process.	83
48	Product Char Analysis from the COED Process	84
49	Other Products from Liquefaction.	85
50	Inputs and Outputs of SRC Syngas Plant.	86
51	Analysis of Feed Coal and Coal Product of The Meyers Process.	88
52	Inputs and Outputs of the Meyers Process.	89
53	Utility Requirements of the Meyers Process.	90
54	Thermal Efficiency in Gasification.	95
55	Thermal Efficiency in Liquefaction.	96
56	Thermal Losses by Unit in Lurgi Gasification.	98
57	Trace Element Concentration of Pittsburgh No. 8 Bituminous Coal at Various Stages of Gasification . . .	108
58	Components in Gasifier Gas.	110
59	Mass Spectrometric Analyses of Benzene-Soluble Tar from Synthane Gasification.	111
60	By-Product Water Analysis from Synthane Gas	112
61	Possible Pollutants from Coal Processing.	114
62	Other Analyses.	115
63	Summary of Effluent Streams to be Analyzed Coal Gasification - Lurgi Process Model	117
64	Summary of Effluent Streams to be Analyzed Coal Liquefaction - COED Process Model.	123
65	Analyses of Streams in Gasification	126
66	Analyses of Streams in Gasification Plants: Ash Disposal.	128
67	Analyses of Streams in Gasification: Gas Liquor.	129
68	Analyses of Streams in Coal Gasification: Gas Purification.	130

LIST OF TABLES (Cont'd)

No.		Page
69	Analyses of Streams in Coal Gasification: Organic Liquid By-Products.	131
8.1	Possible Sources of Transient Pollutants.	140
8.2	Gasification - Possible Transient Emissions	145
8.3	Transient Emissions from SRC Process.	149
8.4	Coal Pretreatment - Calculated Yields and Balances. . .	157
8.5	Typical Catalyst and Chemicals Consumption in a Liquefaction Process.	171
8.6	Example of Number of Trains and Spares Proposed for Large Scale Gasification Plant.	177
APPENDICES		
D.1	Sulfur and Nitrogen Content of the Giant U.S. Oil Fields.	273
D.2	Trace Element Content of U.S. Crude Oils	283
D.3	Sulfur and Nitrogen Content of Crude Shale Oils. . . .	289

LIST OF FIGURES

No.		Page
1	Typical Table of Contents from a Process Report.	5
2	Flow Plan for Coal Gasification.	9
3	Generalized Coal Liquefaction Scheme	56
4	Trace Elements in U.S. Coals	100
5	Lurgi Gasification	116
6	COED Liquefaction.	122
8.1	Flowrates for a Representative Coal Gasification Process	139
8.2	BIGAS Process - Possible Transient Emissions	144
8.3	SRC Process - Possible Transient Emissions	148
APPENDICES		
A.1.1	Koppers-Totzek Gasification Process.	188
A.2.1	SYNTHANE Coal Gasification - 250 million SCFD High - Btu Gas.	193
A.3.1	LURGI Process.	205
A.4.1	CO_2 Acceptor Process	214
A.5.1	BIGAS Process.	220
A.6.1	HYGAS Process.	225
A.7.1	U-Gas Process.	230
A.8.1	Winkler Process.	233
B.1.1	COED Coal Conversion	238
B.1.2	COED Design Revised to Incorporate Environmental Controls and to Include Auxiliary Facilities	239
B.2.1	SRC Coal Liquefaction Process.	253

LIST OF FIGURES (Cont'd)

No.		Page
B.3.1	Block Flow Plan of H-Coal Plant for Coal Liquefaction.	260
C.1	Flow Diagram of Meyers Process	267
D.1	Frequency Distribution of Sulfur Content in Crude Oils of U.S. Giant Oil Fields.	280
D.2	Frequency Distribution of Nitrogen Content in Crude Oils of U.S. Giant Oil Fields.	281

ACKNOWLEDGEMENTS

The following personnel of Exxon Research and Engineering Company made major contributions to the work under this contract:

R. R. Bertrand
H. E. W. Burnside
G. Ciprios
H. J. Hall
C. E. Jahnig
C. D. Kalfadelis
E. M. Magee
G. E. Milliman
T. D. Searl
H. Shaw
G. M. Varga, Jr.

The contributors wish to express special thanks to Miss E. A. DeTuro and Dr. A. H. Popkin for assistance in gathering information. The advice and consultation of various members of the Exxon Engineering Petroleum Department, the Exxon Engineering Technology Department, the Synthetic Fuels Engineering Department, and the Analytical and Information Division of Exxon Research and Engineering Company are very much appreciated. Thanks are also due Miss L. Krupski and Mrs. N. M. Malinowsky for their assistance in report preparation.

A long list of companies, U.S. Government agencies, and their personnel were consulted in the course of this work. Visits were made to the various facilities of these organizations and their personnel were very helpful in donating their time to these visits. Attempts have been made in the various reports under this contract to point out the sources of much of our information and we wish to acknowledge the help that was received.

A special acknowledgement is due T. K. Janes and W. J. Rhodes of the Environmental Protection Agency for continued advice and information that aided considerably the progress of this work.

1. INTRODUCTION

1.1 Background

Along with improved control of air and water pollution, the country is faced with urgent needs for energy sources. To improve the energy situation, intensive efforts are under way to upgrade coal, the most plentiful domestic fuel, to liquid, gaseous and solid fuels which give less pollution. Other processes are intended to convert liquid fuels to gas. A few of the coal gasification processes are already commercially proven , and several others are being developed in large pilot plants. These programs are extensive and will cost millions of dollars, but this is warranted by the projected high cost for commercial conversion plants and the wide application expected in order to meet national needs.

Coal conversion is faced with potential environmental problems peculiar to the conversion process as well as problems that are common to coal-burning electric utility power plants. It is thus important to examine the alternative conversion processes from the standpoint of pollution and thermal efficiencies and these can then be compared with direct coal utilization when applicable.

This type of examination is needed well before plans are initiated for commercial applications. Similar industries, such as the petroleum industry, have gradually grown over a number of years. Much knowledge has been gained concerning stream compositions in the plant, control technology and other operating parameters. This is not true of coal conversion plants. The country is faced with the possibility of having a new industry suddenly emerge on a vast scale with very little background and knowledge of potential environmental hazards. At a time when the country is faced with an energy gap it is also faced with large environmental problems. If recognition of and action taken on the latter is not done early in the area of coal conversion, then the filling of the energy gap may have to be delayed considerably to avoid worsening of the environmental situation.

Coal is a dirty material and the potential exists in coal gasification and liquefaction for far more environmental problems than have even been conceived in coal combustion. Coal combustion is a drastic operation that contains within itself a great amount of pollution control: potential organic pollutants are converted essentially one hundred percent to carbon dioxide and water; many inorganic materials are converted to innocuous oxides. In fact, incineration is an often used technique of destroying unwanted materials. Even so, coal combustion leads to environmental problems that have not been completely solved despite many years of experience. Problems connected with sulfur, nitrogen oxides and trace element emissions are examples of these.

Coal conversion by liquefaction or gasification is much more condusive to environmental contamination. The conditions for coal conversion are far milder than for its combustion; instead of destroying potential pollutants, they are actually formed. Massive streams of dirty water, many hydrocarbon streams, numerous gaseous vents and huge quantities of solids offer the potential for almost every conceivable method of environmental pollution.

Unfortunately, there is little operating experience on which to draw that will predict where and in what form undesirable chemicals will appear. In conceptual designs, the main process streams can be reasonably identified and quantified, but as secondary and tertiary streams are added to the design, the composition of the streams becomes less and less obvious. The picture has been so cloudy that it was not known where knowledge was lacking. With massive funding of coal conversion technology a great need is present to develop adequate pollution controls before many large plants are built. Otherwise, large amounts of funds will have to be spent in retrofitting such plants to add on pollution control equipment, and the time delays could be very large before such plants could operate in a manner that is safe for the environment. To clarify the environmental picture and to furnish a base for additional or new pollution control technology development, the Environmental Protection Agency contracted for the present study to be made by Exxon (formerly Esso) Research and Engineering Company under Contract No. EPA-68-02-0629.

Much of the work under this contract has been reported in individual final task reports and no attempt is made to include all the information in the final report. References to individual task final reports are given in appropriate places. This final report rather addresses itself to summarizing and generalizing the work that has been performed.

1.2 Literature Survey

1.2.1 Trace Elements in Fossil Fuels

An extensive and in-depth literature survey was made to compile available information concerning trace element concentrations in coal, crude oil and shale oil for U.S. fossil fuels. The results of this survey, the interpretation and critique of the information, and information gaps have been reported in a final task report (1) and at an EPA symposium (2).

1.2.2 Coal and Crude Oil Conversion/Treatment Processes

A large quantity of literature information was collected on the various techniques for treating and converting coal and crude oils. Included were physical cleaning techniques, coal gasification processes, coal liquefaction processes, petroleum gasification processes, and a number of miscellaneous conversion and treating processes. The last category included various petroleum refinery processes and sulfur removal processes. Information obtained indicated the need for more extensive work to fill the gaps in the environmental aspects of the processes. This literature information was used extensively in later parts of the program.

1.3 Discussion With Process Developers

A number of visits were made to the developers of various processes for coal conversion. During these visits, unpublished, non-confidential information was obtained relating to possible polluting streams and techniques that might be used to clean the streams. An attempt was made to obtain as much information as possible to use in preliminary environmental plant designs. The visits to and discussions with the developers were very helpful in these studies. The following is a list of developers visited:

U.S. Bureau of Mines
Applied Technology Corporation
Institute of Gas Technology
Koppers Company, Inc.
Consolidation Coal Company, Inc.
Stearns-Roger Inc.
FMC Corporation
Pittsburg and Midway Coal Mining Company
Hydrocarbon Research, Inc.

1.4 Trips to Commercial Plants

A number of commercial plants in the U.S., Europe and South Africa were visited in the course of this contract. A significant amount of non-confidential information relating to pollutants, pollution control and energy efficiency was obtained. This information was useful in confirming the design parameters used for the developing processes, since in many cases the design bases for the latter processes were sketchy. The following is a list of companies whose plants were visited:

Consumers Power Company
Westfield Development Centre of the Scottish Gas Board
Azot Sanayii
South African Coal, Oil and Gas Corporation, Ltd.

1.5 Preliminary Process Designs

Information collected during discussions with developers and commercial plant vendors and operators, together with information from the literature were used to prepare preliminary designs of coal conversion plants. These designs were prepared to pin-point the areas where concern for pollution control should be focused and to obtain overall thermal efficiencies for the processes. For some processes, we used rather detailed engineering designs prepared by others; for other processes, screening type designs, with little optimization, were prepared using the little information that was available. The basis and information sources for each study were defined as much as possible. Plant location, which can have a major effect on air and water conditions, pollution controls required and product disposition, was not specified. Since the basis for each process was different regarding such items as coal feed, product slate, etc., great caution should be taken in making comparisons between the various processes. The process reports are listed in References 3-10 and 41-44.

Where possible, an attempt was made to obtain consistency in the various process designs but this was frequently impossible due to fundamental differences in the processes themselves. For example, feed coals were different and products were frequently different. In almost all cases, consistency was sacrificed to meet the desires of the developers pertaining to specific coals, products, methods of pollutant removal, etc. or to conform, as far as possible, to other designs prepared for governmental agencies or developers. In no case was technical accuracy knowingly sacrificed to conform to anyone's desires or other designs. In all cases, engineering alternatives were suggested. Environmental technology needs were highlighted in each case.

The various plants were made self-sufficient in that utilities were included in the designs. Costs or economics were not included and areas such as coal mining and general offsites as well as small utility consumers such as instruments, lights, etc., were excluded.

An example of the items considered in these studies is indicated by the table of contents from a typical process final report shown in Figure 1.

1.6 Analytical Test Plan

It became obvious early in this work that sufficient information was not available to accurately predict all possible pollutants in the processes and to determine the fate of these pollutants (including trace elements of interest). Consequently, an Analtyical Test Plan was prepared that could be used to determine the course of the pollutants through the various units of coal gasification and liquefaction processes. A "typical" flow plan was shown for gasification and liquefaction. Streams to be sampled were specified for these plants, and analyses to be performed were indicated. Methods of sampling, sample storage and methods of analysis for each material were specified. Ranges of expected pollutant concentrations were specified where possible. Actual examples of analyses of important streams were given, when available. Existing local and Federal regulations and proposed regulations were outlined for each pollutant. The Analytical Test Plan should serve as a guide and model for analysis of pollutant containing streams in any coal conversion plant.

1.7 Transient Pollutants

An attempt was made to point out sources and types of transient pollutants, i.e., pollutants resulting from start-ups, shut-downs, upsets, maintenance, etc. The material in this section has not appeared in previous reports. It was prepared by C. E. Jahnig and E. M. Magee.

Page

SUMMARY 1

TABLE OF CONVERSION UNITS 2

INTRODUCTION 3

1. PROCESS DESCRIPTION AND EFFLUENTS - GENERAL 5

2. EFFLUENTS TO AIR - MAIN GASIFICATION STREAM 8

2.1 Coal Preparation and Storage 8
2.2 Coal Grinding 13
2.3 Gasification 14

2.3.1 Coal Feed System 14
2.3.2 Char Letdown 16

2.4 Dust Removal 18
2.5 Shift Conversion 25
2.6 Waste Heat Recovery 25
2.7 Light Hydrocarbon Removal 25
2.8 Gas Purification 26
2.9 Residual Sulfur Cleanup 27
2.10 Methanation 28
2.11 Final Methanation 30
2.12 Final Compression 30

3. EFFLUENTS TO AIR - AUXILIARY FACILITIES 31

3.1 Oxygen Plant 31
3.2 Sulfur Plant 31
3.3 Utilities 33

3.3.1 Power and Steam Generation 33
3.3.2 Cooling Water 36
3.3.3 Waste Water Treatment 37
3.3.4 Miscellaneous Facilities 39

4. LIQUIDS AND SOLIDS EFFLUENTS 40

4.1 Coal Preparation 40
4.2 Coal Grinding 41
4.3 Gasification 41
4.4 Dust Removal 41
4.5 Shift Conversion 47
4.6 Waste Heat Recovery 47
4.7 Gas Purification 47
4.8 Residual Sulfur Cleanup 48
4.9 Methanation 48
4.10 Gas Compression 48

Figure 1

Typical Table of Contents from a Process Report

(From Ref. 4)

Page

4.11 Auxiliary Facilities 48

4.11.1 Oxygen Plant 48
4.11.2 Sulfur Plant 48

4.11.3 Power and Steam Generation 49
4.11.4 Cooling Water 49
4.11.5 Miscellaneous Facilities 50

4.12 Maintenance 40

5. THERMAL EFFICIENCY 51

6. SULFUR BALANCE 55

7. TRACE ELEMENTS 58

8. PROCESS ALTERNATIVES 66

9. ENGINEERING MODIFICATIONS 69

10. QUALIFICATIONS 72

11. RESEARCH AND DEVELOPMENT NEEDS 76

12. BIBLIOGRAPHY 82

Figure 1 (Continued)

Typical Table of Contents from a Process Report

(From Ref. 4)

2. COAL GASIFICATION PLANTS

Preliminary designs have been made for the gasification processes listed in Table 1. The design for the U-Gas process was for a low Btu product, that for the Winkler and Koppers-Totzek processes were for intermediate Btu products and the rest were designed to produce high Btu gas. In this section of the final report, a summary is given of the results of the studies for the necessary steps in the gasification processes. This summary will include unit descriptions, effluents to the air, solid and liquid effluents, and process alternatives. It cannot be emphasized too strongly that, although tables may be given with results for each process, extreme care should be taken in making comparisons because of the different coal feeds, product slates, furnace feeds, etc. used in the various designs. The Lurgi, Koppers-Totzek and Winkler gasification processes are commercial while the rest of the processes considered are in various stages of development and the designs are conceptual.

Overall environmental considerations of coal gasification have been reported (11,12,13).

2.1 General Gasification Description

Figure 2 is a typical flow plan for coal gasification. Not all the units are the same for different processes and for some, additional units are required.

Coal arrives in the plant and is stored or used directly. Coal preparation may consist of physical cleaning to remove refuse (in many of the designs this step is assumed to be carried out at the mine), crushing and drying. In some cases a slurry preparation step is necessary.

In the gasifier, the coal is reacted with steam and oxygen (pure or as air for low Btu gas) at elevated temperatures and, usually, at elevated pressure. The major reactions in the gasifier are shown in Table 2. The oxygen is necessary to burn part of the coal to supply the heat required for the endothermic reaction of steam with the coal. The products are related to the temperature of the reaction; less methane and carbon dioxide are produced at higher temperatures. Also, by-products such as tar and phenols are reduced at elevated temperatures. Higher pressures tend to increase the formation of methane which is desirable if high Btu gas (substitute natural gas, SNG) is the end product. The quantity of methane is relatively immaterial if fuel gas is desired and may be detrimental if synthesis gas is to be the product. The hot, raw product is normally scrubbed with product liquor or tar to cool it to the point where higher boiling components such as tar and phenols can be removed and to remove particulates.

If SNG or synthesis gas is desired, a shift reactor is normally included to produce more hydrogen by the following reaction:

$$CO + H_2O = CO_2 + H_2 + 17{,}770 \text{ Btu/lb-mole}$$

The hydrogen to carbon monoxide ratio should have a value of approximately 3/1 for the methanation step.

Table 1

Gasification Processes for Which Designs Were Made

(Numbers in the parentheses are references to the Bibliography)

Koppers-Totzek (3)

Synthane (4)

Lurgi (5)

CO_2 Acceptor (6)

BI-GAS (7)

HYGAS (8)

U-Gas (9)

Winkler (10)

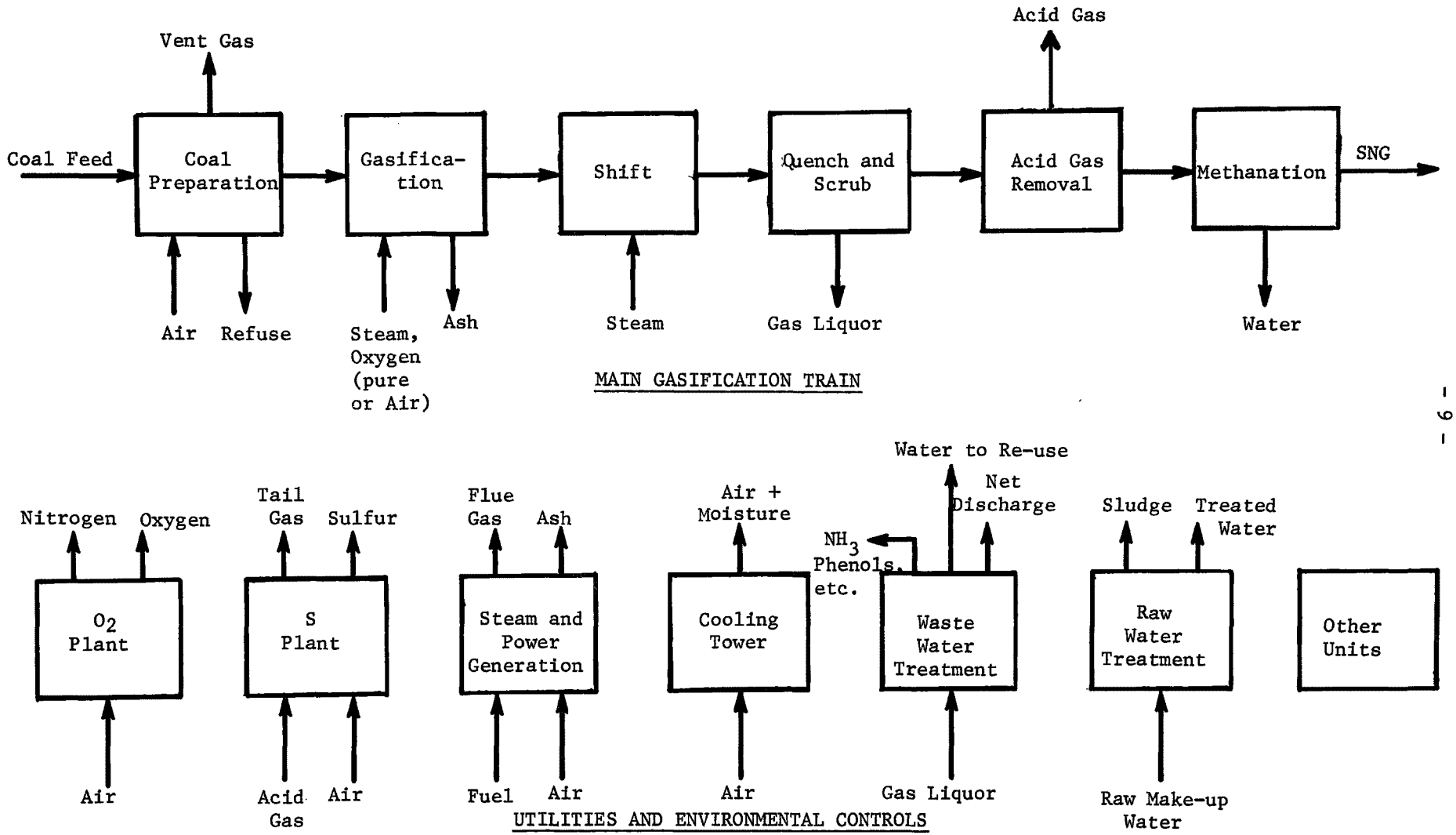

Figure 2

Flow Plan for Coal Gasification

Table 2

Reactions in Gasifier

Devolatilization and Drying

$$\text{Coal} + \text{Heat} \longrightarrow CH_4 + H_2O + \text{Organics}$$

Gasification

$$C + H_2O + 56{,}400 \text{ Btu/lb-mole} \longrightarrow CO + H_2$$

$$C + CO_2 + 74{,}200 \text{ Btu/lb-mole} \longrightarrow 2\ CO$$

$$CO + H_2O \longrightarrow CO_2 + H_2 + 17{,}700 \text{ Btu/lb-mole}$$

$$C + 2H_2 \longrightarrow CH_4 + 32{,}300 \text{ Btu/lb-mole}$$

Combustion

$$C + 1/2\ O_2 \longrightarrow CO + 47{,}550 \text{ Btu/lb-mole}$$

$$C + O_2 \longrightarrow CO_2 + 169{,}200 \text{ Btu/lb-mole}$$

An acid gas removal unit is the next step in the reaction sequence. Hydrogen sulfide must almost always be removed. Carbon dioxide is usually also removed except for fuel gas applications. A number of techniques are available for acid gas removal including hot carbonate solutions, amine solutions, physical absorbtion in cold methanol or other solvents, and, in some cases, chemical reaction of H_2S with appropriate reagents. The reactions occurring are usually reversible so that the materials used are regenerated. This is the last step in fuel gas production.

The final step in the sequence for producing SNG or hydrogen is methanation by the following reactions:

$$CO + 3H_2 = CH_4 + H_2O + 87{,}000 \text{ Btu/lb-mole}$$

$$CO_2 + 4H_2 = CH_4 + 2H_2O + 71{,}000 \text{ Btu/lb-mole}$$

This is a major step in SNG production but is relatively minor when hydrogen is being produced because most of the CO has been removed in the shift section of the plant. SNG is compressed to pipeline pressure and dried.

A number of auxiliary facilities is required for many plants. If oxygen is used in gasification, then an oxygen plant is required. The sulfur compounds from acid gas removal are converted to sulfur in a separate plant if the conversion is not effected in the removal step. For most plants, steam and power must be generated by combustion of an appropriate fuel. Cooling towers, waste water treatment and fresh water treatment are required in all cases. In certain instances, other facilities are required. For example, in the CO_2 Acceptor process, an acceptor regenerator is necessary.

Each of the steps in the overall gasification scheme are discussed in the following sections for the different processes.

2.2 Coal Storage and Preparation

2.2.1 Description of Coal Storage and Preparation

Table 3 gives a summary of the coal preparation and storage assumptions used in the designs. A more detailed description of the individual coal preparation sections is given in Appendix A. A variety of coals were selected by the developers for the processes studied and, thus, comparisons of the processes are difficult. A summary of feed coals with analyses is shown in Table 4. About 30 days storage was assumed for most processes. The size of the coal feed is dictated by the nature of the process and varies from 70% less than 200 mesh up to 1-3/4 inches.

All the coals are dried except for those used in the Lurgi and Synthane processes. In some cases, especially when the moisture content is very high, it is necessary to dry the coal for smooth operation of the process. In others the coal is dried to reduce the heat load in the gasifier, lessening the oxygen requirements. As can be seen from Table 3, a variety of fuels can be used for drying the coal. As indicated below, the purpose of using clean fuel gas in drying is to reduce stack emissions.

Table 3

Coal Preparation and Storage Operations-Gasification

Process	Coal Type	Quantity Stored, tons	Size of Coal Feed	Fuel for Coal Drying	Other Operations
Koppers-Totzek	Navajo Sub-bituminous	200,000	70% < 200 mesh	Coal/Product Gas	---
Synthane	Pittsburgh Seam	400,000	70% < 200 mesh	N.S.	---
Lurgi	Navajo Sub-bituminous	720,000*	1-3/4" x 5/8" & 3/8" x 3/16"	None	---
Co_2 Acceptor	Lignite	800,000	8 x 100 mesh	Lignite/Product Gas Fired Furnace	---
BI-GAS	Western Kentucky No. 11	700,000**	70% < 200 mesh	Coal	---
HYGAS	Illinois No. 6	530,000	< 8 mesh	Fuel Gas	Slurry Formation
U-Gas	Pittsburgh Seam	220,000	< 1/4"	Product Gas	---
Winkler	Lignite	600,000	< 4 mesh	Product Gas	---

---

* Plus 650,000 for emergencies.
** Contains 21% refuse.

N.S. = Not specified

Values shown in this table depend on the original bases chosen; plant sizes as well as other factors differ and direct comparison of the values is difficult. The process reports in references 3-10 should be consulted to determine each design basis, information sources, and qualifications (see Section 1.5) if individual numbers are to be utilized.

Table 4

Coal Analyses - Gasification

Process	Coal Type	Proximate, %				Ultimate (MAF), %						Higher Heating Value, Btu/lb
		Fixed Carbon	Volatiles	Ash	Moisture	C	H	N	S	O	Other	
Koppers-Totzek	Navajo Sub-bituminous	35.0	31.2	17.3	16.5	76.72	5.71	1.37	0.95	15.21	0.04	8,830
Synthane	Pittsburgh Seam	--	--	7.4	2.5	81.9	5.8	1.7	1.8	8.9	--	13,700
Lurgi	Navajo Sub-bituminous	--	--	17.3	16.5	76.72	5.71	1.37	0.95	15.21	0.04	8,872
CO_2 Acceptor	Lignite	--	--	7.47	33.67	70.53	4.71	1.17	1.00	22.59	--	7,376
BI-GAS	Western Kentucky No. 11	45.4	39.5	6.7	8.4	80.20	5.50	1.62	4.10	8.58	--	12,330
HYGAS	Illinois No. 6	--	--	10.79	6.48	78.45	5.43	1.53	4.75	9.85	--	12,600
U-Gas	Pittsburgh Seam	--	--	10.7	6.0	80.70	5.64	1.35	4.97	7.34	--	12,387
Winkler	Lignite Type	--	--	14.5	13.3	71.2	5.4	0.8	4.3	18.3	--	8,910

Values shown in this table depend on the original bases chosen; plant sizes as well as other factors differ and direct comparison of the values is difficult. The process reports in references 3-10 should be consulted to determine each design basis, information sources, and qualifications (see Section 1.5) if individual numbers are to be utilized.

Other operations in coal storage and preparation include slurry feed formation in the HYGAS Process. The use of a slurry feed obviates the problems of lock hoppers operating at high pressures (∿1000 psi) and the consequent handling of lock hopper gas. Evaporation of the slurry liquid is required, however, and pumping slurried coal represents heavy duty on pumps.

2.2.2 Effluents to Air from Coal Storage and Preparation

The coal storage piles represent a potential source of air pollution from dusting and possible fines. In all cases, the storage piles are large and have a large surface area, thus winds can remove significant quantities of dust. Spontaneous combustion could produce obnoxious fumes and proper compaction of the coal piles is necessary (Ref. 14, p. 296-306). Lignites are especially prone to catch fire, but in all cases, proper monitoring of temperatures should be carried out and means should be available for extinguishing fires if they occur.

All coal handling steps are potential sources of dust. Covered conveyors should be used and spills should be recovered promptly or at least maintained in a wet state until recovery is possible.

Crushing and grinding operations can be dusty and should probably be carried out in enclosed spaces provided with sub-ambient pressure control and bag filters. The enclosures would also reduce noise although personnel within the buildings should be properly protected. Environmentally sound disposition of the collected coal dust must be provided. For processes using fine coal, this should present no problem. If fine coal cannot be used in the conversion process, it may be necessary to burn the coal dust for steam generation; in which case, adequate control of stack gas emissions must be provided.

Drying operations present a source of potential pollution. If clean gas is used for drying, one source of pollution is reduced. In all cases, particulate control is necessary since the coal is contacted with a large volume of hot gas. For example, to meet the particulates standard of 0.1 lbs per MM Btu (the level required of stationary boilers) the lignite loss in the CO_2 Acceptor process would have to be less than 0.01 weight percent.

Control of NO_x formation may be desirable. Flame temperature should be kept low and excess oxygen content should be limited to about 10%. This can be accomplished by recycling vent gas. Inert gas (nitrogen from the oxygen plant or carbon dioxide from acid gas removal) can be added to reduce flame temperature and moisture content of the dryer gas. Each process must be considered individually in order to minimize pollution and costs.

2.2.3 Liquids and Solids Effluents from Coal Storage and Preparation

The first problem is due to rain. The storage pile has a very large surface area and the residence time is long so that rain has a chance to react and form acids or extract organics, sulfur, and soluble metals, and in any event contribute suspended matter to the rain runoff. Therefore, it is necessary to collect water from this area as well as from the process area, and send it to a separate retention pond. This pond should have a long enough residence time for solids to settle out; also, there will be a certain amount of biological action which will be effective in reducing contaminants. Limestone can be added in this circuit if needed to correct acidity. The problem may bear some resemblance to acid mine water and should be reviewed from that standpoint (15,16). Run off from the dolomite storage area should also be treated.

In some comparable situations, seepage down through a process area can be a problem in addition to the runoff. Even though storm sewers collect the runoff in a chemical plant or refinery, leaks and oil spills can release enough material that it actually seeps down into the ground water supply. If the ground contains a lot of clay this will not normally be a problem - in fact, the clay can absorb large quantities of metallic ions. In sandy soil it may be necessary to provide a barrier layer underneath the coal storage piles. This could be concrete, plastic or possibly a clay layer.

Water from the coal drainage retention pond will be relatively clean and low in dissolved solids and is therefore a good makeup water for the cooling tower circuit and for preparation of boiler feed water. Normally all of the runoff water can be used in this way so that it will not constitute an effluent from the plant.

No specific solid or liquid effluents are expected from the coal or dolomite grinding, drying, and preheating sections. Coal dryer vent gas will be passed through bag filters to recover the dust. It can be combined with the ash slurry and returned to the mine. Electrostatic precipitators or scrubbers may be used instead of bag filters.

In the BIGAS design, considerable refuse is removed at the plant. It is probable that the refuse will be returned to the mine. Wash water should be sent to a settling pond and recycled.

2.2.4 Process Alternatives

An alternative to minimize dusting and drainage from coal piles is to use the piles only as "dead storage" (17). This stored coal would be used only in emergencies. A much smaller quantity of coal could be stored in silos for day-to-day use. The emergency storage can be covered with a a coating of polymer or asphalt. This reduces the drainage and dusting problems. A further advantage would be loss of coal value due to slow reaction with air. This reaction should decrease with time and coal value losses will be minimized. The use of a cap is, however, contrary to previous recommendations (Ref. 14, p. 298) and should be used with care.

A number of options exist for minimizing air pollution in coal preparation. To minimize coal dusting, for those plants using fine coal feed, the coal can be dried in a relatively coarse form with subsequent grinding. Drying offers a number of other alternatives for optimization with respect to cost and pollution.

One major area for optimization is trade-off between heat load in the gasifier and dryer. This should especially be considered in low Btu processes using air for gasification. Some of the heat of drying in the gasifier can be recovered in subsequent steps in the process. Smaller dryer gas volumes can be used if the moisture content of the coal feed is allowed to increase.

Another major area to be considered is the use of clean gas for dryer fuel vs the use of coal with stack gas scrubbing. The latter alternative should be effective in removing particulates and sulfur.

Nitrogen or carbon dioxide from the process can be used to reduce the oxygen content of the dryer gas. This increases drying capacity of the gas over that obtained by gas recycle.

In those areas where water is a premium, much of the moisture from the coal dryer gas could be recovered using air fin condensers. This might be very useful for Western coals and lignite where the moisture content of the coal is high and fresh water is scarce.

2.3 Gasification and Quench Sections

2.3.1 Gasifiers and Operating Conditions

The gasifiers examined in this study include several types. These range from a counter-current, slowly moving bed to fluidized beds to entrained flow. Temperatures vary considerably, often in the same bed, and range from 600°F in the dryer of the HYGAS process to 3000°F in the bottom of the BIGAS process. Pressures vary widely, from essentially atmospheric pressure in the Koppers-Totzek process to 1200 psia in the HYGAS process. Both air and oxygen gasifiers were examined. The products from the processes include low, medium and high Btu gas. (The processes producing high Btu gas necessarily produce a medium Btu gas before methanation.) A summary of the various process gasifiers is shown in Table 5 together with operating conditions and type of final product gas. A more detailed description of the gasifiers is given in Appendix A and in references 3-10.

The inputs to the gasifiers are given in Table 6. The quantities of coal/lignite feed shown for the processes is actual feed dried to the moisture contents given as footnotes. The CO_2 acceptor process is different in that air is fed to the acceptor regenerator rather than to the reactor. Except for the Koppers-Totzek and U-Gas processes, the Btu contents of the final product gases are roughly the same (231-250.3 X 10^9 Btu/day). The Koppers-Totzek design produces 88.7 X 10^9 Btu/day while the U-Gas design produces 124 X 10^9 Btu/day. These products are discussed in a later section.

Table 5

Gasifier Descriptions and Operating Conditions

Process	Type	Oxidant Supplied	Temperature, °F	Pressure, psia	Product Gas
Koppers-Totzek	Entrained Slagging	oxygen	2700	15	Medium Btu
Synthane	Fluid bed	oxygen	Top - 800 Bottom - 1700	1000	High Btu
Lurgi	Counter-current bed	oxygen	Top - 1100 - 1400 Bottom - ∿1700	420	High Btu
CO_2 Acceptor	Fluid bed	air*	1500	150	High Btu
BI-GAS	Top zone - entrained bottom zone - slagging	oxygen	Top zone - 1700 Bottom Zone - 3000	1200	High Btu
HYGAS	Fluid bed 4 sections	oxygen	Top - 600 2nd Sect. - 1250 3rd Sect. - 1750 Bottom - 1900	1200	High Btu
U-Gas	Fluid bed	air	1900	350	Low Btu
Winkler	Fluid bed	oxygen	1700	30	Medium Btu

---

*To Acceptor regenerator

Values shown in this table depend on the original bases chosen; plant sizes as well as other factors differ and direct comparison of the values is difficult. The process reports in references 3-10 should be consulted to determine each design basis, information sources, and qualifications (see Section 1.5) if individual numbers are to be utilized.

The products in the raw gas from the gasifier/quench section of the plants are tabulated in Table 7, based on dry gas. Other materials leaving the gasifiers in various streams are given in Table 8.

In Table 8, some of the solid effluents from the gasifiers are classified as ash while others are shown as char. The distinction is subjective as some carbon remains in the ash and some chars have relatively low carbon. The analyses of those solids listed as chars are shown in Table 9. Steam is also produced in all cases from the gasifier jackets or in waste heat boilers.

2.3.2 Gasifier Effluents to Air

No major gaseous effluent streams are expected from the gasifier/quench sections of the plants. It is expected that inert gas or steam used in pressurizing lock hoppers will be returned to the main gas stream. Care must be taken that sources of dust from dry ash or char does not enter the atmosphere. Quench systems for ash or char should be designed to prevent effluent odors, if present. For more details of the containment of gaseous effluents from the gasifier sections of the plants, the individual process reports (3-10) should be consulted.

2.3.3 Liquid and Solid Effluents

The largest liquid and solid effluent streams from the gasifier section of the plants are the ash or char streams. For those processes utilizing char as fuels, these streams are not effluents at this point.

The ash is usually recovered as a slurry and may pass to settling ponds, be returned to the mine, or may have a use such as land fill. In all cases, there exists the possibility of leaching of inorganic materials into general water systems. This can be prevented by using linings for ponds where the soil is sandy. Linings will not be necessary if the soil has a large adsorptive capacity for the soluble ions.

Dirty water streams from the quench sections of each process are sent to some form of waste water treatment. This treatment is reported to consist only of settling ponds for some streams such as ash slurries, but the treatment may be extensive for those streams containing phenols, ammonia, etc. The waste water treatment systems will be discussed later.

There is a purge stream of slurry oil from the HYGAS process that may require treatment. It may contain organic materials as well as trace elements. The disposition of this stream will depend on further definition of its analysis.

2.3.4 Process Alternatives

No major process alternatives exist for the gasifiers since each is defined by the developer. Minor alternatives such as lock hoppers vs slurry feeding, method of pressurizing feed hoppers, methods of ash removal and techniques for quenching the various raw gas streams are discussed for each process in the process reports (Ref. 3-10). A good discussion of these alternatives is presented in the Synthane report (Ref. 4).

Table 6

Inputs to Gasifiers

(lb/hr except as noted)

Process	Coal or Lignite	Higher Heating Value, Btu/lb coal*	Steam	Oxygen	Air
Koppers-Totzek	479,300 (1)	10,327	84,700	326,900	--
Synthane	1,187,500 (2)	13,700	1,169,700	304,000	--
Lurgi	1,722,200 (3)	8,872	1,762,200	468,500	--
CO_2 Acceptor	1,413,400 (4)**	10,945	1,653,700	--	3,373,400***
BI-GAS	946,300 (5)	13,285	409,700	497,600	--
HYGAS	1,057,900 (6)	12,600	981,700	270,300	--
U-Gas	575,400 (7)	13,178	371,750	--	1,849,000
Winkler	1,675,000 (8)	9,320	820,800	961,300	--

Notes: * With moisture as shown in notes 1-8.

** 7,164,000 lb/hr hot acceptor also enters from regenerator

*** Air used in regeneration of acceptor

(1) 2% Moisture
(2) 2.5% Moisture
(3) 16.5% Moisture
(4) 0% Moisture
(5) 1.3% Moisture
(6) 0% Moisture
(7) 0% Moisture
(8) 8.7% Moisture

Values shown in this table depend on the original bases chosen; plant sizes as well as other factors differ and direct comparison of the values is difficult. The process reports in references 3-10 should be consulted to determine each design basis, information sources, and qualifications (see Section 1.5) if individual numbers are to be utilized.

Table 7

Raw, Dry Gas from Gasifiers and Quench

(lb/hr)

Process	CO	H_2	CO_2	CH_4	H_2S	COS	N_2	Higher Hydrocarbons
Koppers-Totzek	575,300	22,200	88,900	600	3,400	700	11,000	0
Synthane	320,000	38,200	871,000	268,000	12,200	N.R.	16,000	15,000
Lurgi	535,500	76,500	1,243,800	174,000	10,700	N.R.	8,800	28,900
CO_2 Acceptor*	431,600	145,000	308,500	98,900	1,142	N.R.	6,200	N.R.
BI-GAS**	1,024,300	40,900	512,300	207,300	40,600	N.R.	15,300	N.R.
HYGAS	650,100	48,300	763,800	244,200	43,300	700	1,700	15,100
U-Gas	520,800	25,600	422,900	72,400	25,600	1,400	1,407,900	N.R.
Winkler	1,094,800	85,700	1,066,500	32,000	51,250	10,000	34,000	N.R.

---

* Does not include gas from acceptor regenerator

** Output includes 104,100 lb/hr (dry) recycled product gas

N.R. = Not reported

Values shown in this table depend on the original bases chosen; plant sizes as well as other factors differ and direct comparison of the values is difficult. The process reports in references 3-10 should be consulted to determine each design basis, information sources, and qualifications (see Section 1.5) if individual numbers are to be utilized.

Table 8

Other By-products from Gasifier and Quench

(lb/hr)

Process	Ash	Char	Tar & Oil	Phenols	NH_3	Hydrocarbon liquids
Koppers-Totzek	111,500	-	negligible	negligible	negligible	negligible
Synthane	-	362,200	43,200	N.R.	13,200	7,400
Lurgi	314,000	-	126,400	10,100	16,900	18,400
CO_2 Acceptor	*	496,800**	N.R.	N.R.	N.R.	N.R.
BI-GAS	68,400	-	N.R.	N.R.	7,700	N.R.
HYGAS	-	138,900	N.R.	1,300	11,300	39,800
U-Gas	-	86,400	N.R.	N.R.	N.R.	N.R.
Winkler	-	372,500	N.R.	N.R.	N.R.	N.R.

---

* See regenerator section in section 2.16.1.

** Char passes to regenerator. 7,977,000 lb/hr of acceptor passes to regenerator section.

N.R. = Not reported

Values shown in this table depend on the original bases chosen; plant sizes as well as other factors differ and direct comparison of the values is difficult. The process reports in references 3-10 should be consulted to determine each design basis, information sources, and qualifications (see Section 1.5) if individual numbers are to be utilized.

Table 9

Char Analysis

Process	Char Analysis, wt. %						
	C	H	O	S	N	Ash	HHV, Btu/lb
Synthane	71.4	0.9	1.8	1.5	0.5	23.9	11,000
CO_2 Acceptor*	63.41	0.54	2.26	0.97	0.25	32.57	9,450
HYGAS	10.3	N. A.	N. A.	N. A.	N. A.	N. A.	1,488
U-Gas	20.33	1.43	-	0.58	1.78	75.88	3,877
Winkler	31.7**	N. A.	N. A.	N. A.	N. A.	N. A.	4,810

---

* Char is burned in acceptor regenerator

** Average of two streams

N. A. = not available

Values shown in this table depend on the original bases chosen; plant sizes as well as other factors differ and direct comparison of the values is difficult. The process reports in references 3-10 should be consulted to determine each design basis, information sources, and qualifications (see Section 1.5) if individual numbers are to be utilized.

2.4 Shift Conversion and Cooling

Shift conversion, that is, the reaction of carbon monoxide with steam to produce hydrogen and carbon dioxide, is only used in those processes where SNG is the final product and only then when there is not sufficient hydrogen in the raw gas to effect the methanation step. (Processes designed for maximum hydrogen production would of course also use the shift reaction.) Of the processes studies in this work, only the Synthane, Lurgi, BIGAS and HYGAS processes use shift conversion.

2.4.1 Description of Shift Conversion

When SNG is to be the final product of the process, it is usually necessary to convert carbon oxides to methane by hydrogenation. Since the principal reaction is carbon monoxide with hydrogen, a ratio of hydrogen to carbon monoxide of about 3:1 is required prior to methanation. This ratio is obtained in the shift reactor section of the plant by reacting carbon monoxide with steam in the following reaction:

$$CO + H_2O = CO_2 + H_2 + 17{,}770 \text{ Btu/lb-mole.}$$

(The CO_2 Acceptor process is an exception since sufficient hydrogen is present in the raw gas.) Usually, only a fraction of the total raw gas stream passes through the converter system since only part of the carbon monoxide is reacted. Before entering the converter reactors, the gas is usually washed to remove most of the tars, dust, etc., to prevent bed plugging.

Although low temperature catalysts (ca. 450°F) are available for carbon monoxide conversion, these catalysts are deactivated by sulfur compounds. In the designs for SNG production, it has been assumed that acid gas removal is most economically carried out after the shift reaction so that carbon dioxide, formed during shift conversion, is also removed. Thus, high temperature (ca. 700°F) catalyst are used that are not grossly affected by sulfur compounds. These usually consist of chromia promoted iron oxide and have a life of up to three years. The exothermic heat of the shift reaction is removed by intercooling and preheating the cool raw gas.

After the shift reaction the shifted gas and bypassed gas are cooled and remixed. During cooling, as much useful heat is recovered as possible. Also during cooling, organic compounds may be removed and sent to storage or to other units in the plant. Large quantities of water are condensed and must be treated prior to reuse or discharge. (In some cases, at least part of the dirty water can be used for quench.) The cooled gas is then sent to the acid gas removal section for further purification.

A more detailed description of the individual shift converter sections may be found in Appendix A.

2.4.2 Effluents to Air from Shift Conversion and Cooling

There are normally no effluents to the air from the shift conversion and cooling section of the plant; any vent gases are collected, recompressed and returned to the system.

2.4.3 Liquids and Solid Effluents from Shift Conversion and Cooling

The only solid effluent from the shift conversion section is the periodic catalyst removal required after about three years operation. The relatively small quantities involved should present no disposal problems. A note of caution is warranted, however. It is possible that there would be a buildup of trace metals on the catalyst that could present environmental problems. The spent catalyst should be examined carefully before disposal to assure that the disposal method used will be environmentally sound.

Liquid streams leaving the shift/cooling section may include oil products to storage or other use and contaminated water. The latter must be treated and will be discussed later in Section 2.11. The quantities of dirty water leaving the shift conversion and cooling areas are shown in Table 10. The water from the cooling areas is also included for those processes without a shift reactor.

2.4.4 Process Alternatives in Shift Conversion and Cooling

Few process alternatives exist in the area of shift conversion. The technique is quite old and most variables have been optimized.

One alternative that might offer advantages in some cases is the use, as much as possible, of the dirty water before treatment. This is done in the BIGAS process. Use of the water in place of steam would offer credits for steam production as well as decrease the load on waste water treatment. It should be noted, however, that water in the Koppers-Totzek process is relatively clean and requires only a settling pond for treatment for reuse.

Cooling of the gas stream prior to acid gas removal should be carried out so as to conserve as much heat as possible for subsequent use. The level at which this heat is recovered will be determined by its subsequent utilization. Air fin coolers can be used as far as possible in the final cooling to conserve cooling water.

2.5 Acid Gas Removal

The acid gas removal section of the plant has the duty of removing sulfur compounds, carbon dioxide and any other materials that would interfere with subsequent methanation. There is a large number of options for this section and no attempt will be made to describe them all. Brief descriptions will be given of those chosen for the processes in the present study together with the effluents from each as far as information is available.

2.5.1 Description of Acid Gas Removal

The procedures chosen for acid gas removal generally involve chemical or physical absorption of the acidic materials in a suitable liquid with subsequent desorption of the acid gases at a lower pressure

Table 10

Sour Water from Shift Conversion, Cooling and Scrubbing

Process	Water, lbs/hr	Disposition
Synthane	1,110,000	To waste water treatment
Lurgi	1,277,500 (1)	To waste water treatment
BI-GAS	866,600	To quench (2)
HYGAS	806,500	To waste water treatment
Koppers-Totzek (3)	7,142,800 (4)	To clairifier
CO_2 Acceptor (3)	612,000	To waste water treatment
U-Gas (3)	230,800	To waste water treatment
Winkler (3)	928,300	To waste water treatment

(1) Contains sour water from initial cooling

(2) Perhaps 86,000 lb/hr must be treated to prevent build up of trace contaminants

(3) No shift conversion. Sour water from quench and cooling

(4) This water is reported not to contain sour components; the large quantity is needed for solids removal.

Values shown in this table depend on the original bases chosen; plant sizes as well as other factors differ and direct comparison of the values is difficult. The process reports in references 3-10 should be consulted to determine each design basis, information sources, and qualifications (see Section 1.5) if individual numbers are to be utilized.

(and in some cases at higher temperatures) to regenerate the absorbent. Table 11 lists the acid gas removal techniques suggested for the processes studied in this work. It should be noted that acid gas removal is a major consumer of utilities.

The hot carbonate process has been described in a number of publications (e.g., Ref. 18 and 19). Basically, the process involves absorption of acid gases in a solution of potassium carbonate (and additives) at about 230°F. The acid gases are desorbed in a regeneration tower at lower pressure with steam stripping. Variations (such as operation at a lower temperature in the absorber) have been suggested to increase absorption. Other sulfur compounds, such as COS, CS_2 and mercaptans can be removed to a certain extent depending on conditions. Thiophenes should not react with the carbonate solution but partial removal has been reported (18). Cyanides and sulfur dioxide may react irreversibly with the solution. By modification of the design two acid gas streams can be obtained: one high in sulfur content (suitable for a Claus plant) and the other high in carbon dioxide. The latter stream will still contain significant sulfur as hydrogen sulfide that will have to be incinerated or removed (see the description of the BIGAS process (7)).

The Rectisol cold methanol process operates by absorption of acids in methanol at reduced temperatures (ca. -50°F) and has been described in the literature (e.g., Ref. 20). This process is capable of removing all the types of sulfur compounds but can also remove significant quantities of combustibles. One design (21), after reducing combustibles to a minimum, incinerates the acid gas after sulfur removal. Although it is possible to obtain a relatively pure CO_2 stream and a high concentration of H_2S in a separate stream, the relationship between the loss of product gas and the concentration of H_2S in such an arrangement is not clear. (The unit described in Reference 21 produces only one stream with a low H_2S content unsuitable for a Claus plant.) The Rectisol process may use stripping gas (N_2) in some cases and can be integrated with the final product gas compression step to remove water from the final product gas.

The Koppers-Totzek process makes use of an amine system (methyl diethanolamine) for acid gas removal at about 120°F. This system is capable of producing a high concentration of H_2S in the sour gas stream which can be sent to a Claus plant. Several hundred parts per million of sulfur compounds and most of the CO_2 remain in the product gas, but for fuel use this is acceptable. If it were necessary to methanate the product gas, further treatment would be necessary.

Selexol acid gas removal, indicated for use in the U-Gas process, absorbs acid gases in dimethoxy tetraethylene glycol. (See References 22 and 23 for a description of the Selexol process.) A high concentration of H_2S in the product gas stream can be obtained by this process, but no information is available as to the concentration of product gas in the acid gas stream.

Table 11

Acid Gas Removal

Process	Type of Acid Gas Removal	Volume of Acid Gas, MM scfh (1)	Acid Gas Analysis (1) V % H_2S	Acid Gas Analysis (1) V % Total S Compounds	HHV of Acid Gas, Btu/scf (1)	Type of S Guard
Koppers-Totzek	Methyl diethanolamine	0.138	23.1	24	N. S.	N. N.
Synthane	Hot carbonate (Benfield)	9.2	1.5	N. S.	35 (2)	Iron oxide/ char (or activated carbon)
Lurgi	Cold methanol (Rectisol)	13.5	1.1	N. S.	38	Zinc oxide
CO_2 Acceptor	N. S.	0.22 (3)(4)	5.9 (4)	N. S.	N. S.	Zinc oxide
BI-GAS	Hot carbonate (Benfield)	2.92 (5)	14.6	N. S.	N. S.	Zinc oxide
HYGAS	Cold methanol (Rectisol)	1.71 (6)	29.8	N. S.	N. S.	Zinc oxide
U-Gas	Dimethoxy tetraethylene glycol (Selexol)	1.58	17.9	18.2	N. S.	N. N.
Winkler	Hot carbonate	4.04	15.0	15.0	N. S.	N. N.

N. N. = Not needed
N. S. = Not specified

(1) Dry Gas
(2) Estimated
(3) Does not include gas from regenerator
(4) N. S. if wet or dry gas
(5) Does not include all CO_2 - 9.91 MM scfh vented separately
(6) Does not include all CO_2 - 9.88 MM scfh vented separately

Values shown in this table depend on the original bases chosen; plant sizes as well as other factors differ and direct comparison of the values is difficult. The process reports in references 3-10 should be consulted to determine each design basis, information sources, and qualifications (see Section 1.5) if individual numbers are to be utilized.

The sulfur content of the gas from the acid gas absorption system is usually decreased further by reaction with iron oxide, or zinc oxide or by adsorption. This step is frequently necessary to protect the methanation catalyst which is highly sensitive to the presence of sulfur compounds. The clean gas, if SNG is to be the final product, then passes to the methanation section. The acid gas stream containing the H_2S passes to a sulfur recovery plant.

2.5.2 Effluents to Air From Acid Gas Removal

The only atmospheric emission from the acid gas removal section is, in some cases, a carbon dioxide stream containing sulfur compounds and combustible materials (H_2, CO, CH_4, etc.). The quantities that could be emitted depend on the type of system used and the specific design of the system. The sulfur compounds, such as H_2S, COS, thiophenes, etc., can be removed by various treating processes, such as adsorption by molecular sieves. Alternatively, the combustible materials can be converted to carbon dioxide and the sulfur can be emitted as sulfur oxides by inceration. Unless the HHV of the carbon dioxide stream is sufficiently high, the cost of incineration can be expensive due to the large quantities of carbon dioxide that must be vented.

When guard boxes are to be regenerated (usually by air blowing at elevated temperatures), appropriate disposition of the exit gases must be available. These gases normally will contain sulfur oxides. The effluent may be directed to a furnace stack if the SO_x concentration is not too high. Otherwise some sort of scrubbing will be necessary.

2.5.3 Liquids and Solid Effluents from Acid Gas Removal

Condensate streams are formed in the acid gas removal sections of the plants. These streams are normally sent to a waste water treatment section. Build up of impurities in the absorption medium requires purging of the absorbent and the disposition of these purges requires individual examination. One frequently suggested technique of disposal is by incineration followed by mine burial of the solid residues.

When guard boxes are necessary prior to the methanation step, it is necessary to dispose of the spent solids from time to time. One suggested method is mine burial. A determination of leachability of the solids will be necessary to assure that contamination of ground water is not a problem. The solids should especially be examined to assure that potentially hazardous trace elements have not accumulated which could present an environmental problem. If such is the case, techniques will have to be devised to assure the environmental soundness of the ultimate fate of the solids.

2.5.4 Process Alternatives in Acid Gas Removal

Besides those discussed in 2.5.1, other alternatives exist for removal of acid gases from the main gas streams (24, 25, 26). In particular, it should be mentioned that aqueous solutions of monoethanolamine (MEA) and diethanolamine (DEA) have been used for removal of acid gases

from gas streams (see, for example, Reference 27). If COS is present, MEA reacts with it irreversibly, while the COS passes through DEA. The MEA and DEA are not particularly selective for H_2S removal vs CO_2 removal. However, triethanolamine (TEA) preferentially removes hydrogen sulfide and a combination of TEA and a CO_2 removal system could be used to obtain a highly concentrated hydrogen sulfide stream for a Claus plant.

Alternatives for trace sulfur removal should also include the use of molecular sieves alone or in conjunction with methods discussed above.

Any type of acid gas removal unit chosen can be varied extensively. The choice of configuration will be dictated by such restrictions as gas composition, temperature and pressure, type of sulfur recovery facility, availability of excess steam, economics of the final trace sulfur clean-up system, and others. Each case must be examined individually, not only to choose the best type of acid gas removal system for the particular application, but also as to what modification to choose for the best type. It should be kept in mind, however, that ultimate disposition of effuents can be a major factor in the final choice for acid gas removal.

As in other cooling operations, air fin cooling rather than the use of cooling water can be advantageous in areas where water is scarce. Where the absorber and regenerator operate at different temperatures, heat exchange can be used to reduce the heat load. Another possible alternative to be considered is the use of heat pumps to minimize energy consumption. Still further energy conservation can be had by the use of liquid turbines in the depressurization of the absorber solution. These options must, of course, be considered from the standpoint of cost, availability and environmental effect.

2.6 Methanation Section

2.6.1 Description of the Methanation Section

When SNG is the desired final product, a methanation step is required. The reactions involved in methanation are

$$CO + 3H_2 = CH_4 + H_2O + 87{,}700 \text{ Btu/lb-mole}$$

$$CO_2 + 4H_2 = CH_4 + 2H_2O + 71{,}000 \text{ Btu/lb-mole}$$

It is usually desirable to reduce the need for the last reaction to conserve hydrogen requirements. Fortunately, the reaction of CO_2 is slow in the presence of CO. The above reactions are generally carried out over a nickel catalyst that is easily deactivated by sulfur compounds, hence the need for very clean feed gas.

Methanation has been used for years in, for example, ammonia plants where the levels of carbon monoxide to be removed has been low. In the production of SNG, the concentration of CO is high and special considerations are then necessary (28).

The methanation reactions are highly exothermic and it is necessary to design the unit to keep the temperature within limits dictated by catalyst life. It is also desirable to recover as much as possible of the heat released in the reactions at as high a temperature as possible. Other design considerations involve the possible formation of nickel carbonyl at low temperatures and the reaction of CO to give CO_2 and carbon at high temperatures; methanators usually operate at about 750°F.

Temperature control can generally be effected by large recycle of the cooled effluent gas. This keeps the carbon monoxide low and hence the temperature rise is minimized. The U.S. Bureau of Mines (now PERC of ERDA) has proposed the use of a heat exchanger in which a nickel catalyst is sprayed onto the exchanger tube walls (4). Heat can then be transferred to a suitable liquid.

2.6.2 Effluents to Air from the Methanation Section

During normal operation, there should be no effluents to the air from the methanation section. During start-up, recycle of the process gas is necessary, and during shut-down, facilities are required for flushing the catalyst bed with inert gas and for oxidizing the catalyst with a stream containing low amounts of oxygen. The effluent gases can be incinerated.

There is the possibility of the formation of nickel carbonyl, especially at low temperatures, and care must be taken that this is not released to the atmosphere (or, for that matter, that the final SNG product is not contaminated).

2.6.3 Liquids and Solid Effluents

The only liquid from methanation is a relatively clean condensate that can be sent to raw water treatment. Gases evolved during decompression of the water should be recompressed and returned to the system. No solids leave this section except during catalyst replacement; the catalyst will probably be reworked to recover the nickel content.

2.6.4 Process Alternatives in Methanation

Few alternatives exist for methanation and these generally have to do with methods of heat recovery/temperature control. Internal cooling, as in the Bureau of Mines (now PERC of ERDA) technique, is one possibility. The generally accepted method is recycle of a large stream of cooled gas. Heat is then extracted from the hot gas from the reactor before recycle. However, the recycle compressor can be a large energy user. A desirable alternative, but one that is not available at present, would be a catalyst that was more tolerant of sulfur compounds.

2.7 Compression and Drying

For high Btu gas a compression step may be required to bring the gas to pipeline pressure. (For some other applications, compression of the gas from the atmospheric gasification processes may be required.) This compression does not release atmospheric pollutants but does require considerable energy. The gas is then dried, using, for example, a glycol

system. (Systems using a cold methanol carbon dioxide removal step do not require further drying.) The water from the gas stream is sent to raw water treatment. Gases evolved during decompression are recompressed and returned to the gasification system. Thus there are normally no gaseous, liquid or solid effluents from the compression and drying section. The materials used for drying will have to be replaced infrequently.

2.8 Final Product Gas

Table 12 shows the analyses of the product gas produced in each of the processes studied, along with the total volumes, heat contents and pressures.

2.9 Oxygen Plants

All the gasification processes studied in this work except the CO_2 Acceptor and U-Gas processes, require an oxygen plant. Oxygen in some form is required to burn part of the coal to produce the heat required in the gasifier. The U-Gas process uses air to accomplish this. The CO_2 Acceptor process carries out the oxidation in a separate reactor where air can be used without contamination of the product gas with large quantities of nitrogen. Other than for process operability, the use of pure oxygen allows the production of a higher Btu product from the gasifier than could be obtained by the use of air and the consequent introduction of nitrogen into the gas stream. Reference 29 presents a good discussion of oxygen separation from air.

Table 13 lists the oxygen requirements of the processes studied. The oxygen plants are relatively clean; the major effluents to the atmospheres are those that come in with the air. The liquid effluent is the water from the air and this can be directed to boiler feed water treatment. However, oxygen plants consume considerable energy for compression; approximately 0.2 hp-hr is required per pound of oxygen. Supplying this energy represents the major environmental effect of the oxygen plant.

2.10 Sulfur Recovery

2.10.1 Description of Sulfur Recovery

Sulfur recovery is a major concern with respect to its effect on the environment. There are quite a number of alternatives available for sulfur recovery, each with its own problems. Sulfur recovery has long been an active area for research and development and has been discussed extensively in the literature (see, for example, Refs. 24,25,26,30,31).

Basically, sulfur recovery usually depends on the oxidation of sulfur according to the equation

$$H_2S + (O) \longrightarrow H_2O + S$$

Classically, the oxygen came directly from air but newer processes depend on intermediate compounds which oxidize the hydrogen sulfide.

Table 12

Net Dry Product Gas

Process	Volume of Product Gas, MM scfd	HHV of Product Gas, Btu/scf	Pressure of Product Gas, psia	Gas Analysis, Volume %					
				CH_4	H_2	N_2	CO_2	CO	H_2S + COS
Koppers-Totzek	290	303	166	0.1	32.6	1.2	5.2	60.9	0.03
Synthane	250	927	1000	90.5	3.6	2.1	3.7	0.1	----
Lurgi	251	972	915	95.9	0.8	1.2	2.0	0.1	----
CO_2 Acceptor	263	952	1000	93.0	4.8	0.8	1.3	0.1	----
BI-GAS	250	943	1075	91.8	5.1	1.9	1.1	0.1	----
HYGAS	260	1000	958	93.0	6.6	0.2	0.1	0.1	----
U-Gas	784	158	300	4.9	13.8	54.4	6.7	20.2	0.015
Winkler	886	282	Ca 15	2.0	42.7	1.2	15.1	38.9	0.08

Values shown in this table depend on the original bases chosen; plant sizes as well as other factors differ and direct comparison of the values is difficult. The process reports in references 3-10 should be consulted to determine each design basis, information sources, and qualifications (see Section 1.5) if individual numbers are to be utilized.

Table 13

Gasification Process Oxygen Requirements

Process	Oxygen Required, lb/hr	Oxygen Required, lb per MM Btu in Gasifier Feed Coal
Koppers-Totzek	326,900	66.04
Synthane	304,000	18.69
Lurgi	468,500	30.67
BI-GAS	497,600	39.58
HYGAS	270,300	20.28
Winkler	961,300	61.58

Values shown in this table depend on the original bases chosen; plant sizes as well as other factors differ and direct comparison of the values is difficult. The process reports in references 3-10 should be consulted to determine each design basis, information sources, and qualifications (see Section 1.5) if individual numbers are to be utilized.

The Claus process, developed about 1890, oxidized H_2S over a bauxite or iron ore catalyst. Later modifications included oxidation of part of the hydrogen sulfide completely to recover heat and the subsequent reaction of the SO_2 with the remaining H_2S to produce sulfur. The latter technique allows operation at lower H_2S concentrations in the feed stream. At very low concentrations of H_2S, fuel must be added to the hydrogen sulfide stream to support combustion. The biggest problems with the Claus plant approach is that high concentrations of H_2S are required and the tail gas from the plant still contains sulfur at such a level as to make its atmospheric release undesirable.

The liquid phase production of sulfur has been used to decrease sulfur content of the exit gases. These processes use an intermediate compound such as vanadates to oxidize the H_2S and can operate with dilute feeds. Commercial examples of these processes are the Stretford (32, 33, 34), the Giammarco Vetrocoke (24) and the Takahax (24) processes. These processes suffer due to problems in removal of other sulfur compounds, such as COS, and difficulty of liquid effluent disposal.

Details on sulfur recovery for the various processes are summarized in Table 14.

2.10.2 Effluents from Sulfur Recovery

The principal effluent from sulfur recovery plants is the tail gas. In the past it has been common practice to incinerate Claus plant effluents. In coal gasification, the large volume of CO_2 in the effluent makes incineration expensive. Furthermore, the SO_2 content of the incinerated gas can be excessive.

A number of processes have been announced for removing most of the sulfur from the Claus tail gas (24). Among these are the Beavon, IFP, SCOT, Sulfreen and the W-L processes. In the Beavon and SCOT processes, the sulfur compounds are converted to H_2S. The H_2S, in the Beavon process, is converted to sulfur in a Stretford unit. In the SCOT process, the H_2S is separated from the CO_2 using a selective alkanolamine absorber and is returned to the Claus plant. In the IFP process, the tail gas is incinerated and scrubbed with aqueous ammonia. The sulfates are reduced to sulfites, SO_2 is generated from the sulfites in solution and is reacted with a slip stream of H_2S to produce sulfur. The Sulfreen process is an extension of the Claus process. The H_2S and SO_2 are reacted catalytically at low temperature to form sulfur. The W-L process produces SO_2 solutions by incineration of the Claus tail gas followed by absorption. The SO_2 is removed from solution and returned as a concentrated stream to the Claus unit.

The use of tail gas clean-up adds to the cost of the gasification plants. Also, those processes utilizing liquids usually have a liquid effluent to dispose of with attendant environmental consequences that must be taken into account. Each case must be investigated individually to determine the environmental effects and at present no firm commitments have been made as to the process to be used.

Table 14

Sulfur Recovery in Gasification Systems

Process	Type of Sulfur Recovery	Acid Gas to Sulfur Plant MM scfd (1)	H_2S Concentration in Acid Gas (1) V%	Total Sulfur Produced, lb/hr	Sulfur in Tail Gas, V ppm	HHV of Tail Gas, Btu/scf	Tail Gas Disposal
Koppers-Totzek	Claus	0.138	23.1	3,330	3,390	N.S.	Clean-up (N.S.)
Synthane	Stretford	9.2	1.5	11,670	5	26 (7)	To boiler stack
Lurgi	Stretford	13.5 (2)	0.93 (2)	12,340	740	29	Incineration
CO_2 Acceptor	N.S.	0.22 (3)(4)	5.9 (3)	9,920	N.S.	N.S.	Incinerate and clean up with flue gas
BI-GAS	Claus	2.92 (5)	14.6	35,130	2,431	N.S.	Clean-up (N.S.)
HYGAS	Claus	1.7 (2,6)	29.8 (2)	55,500	3,010	N.S.	Clean-up Wellman-Lord
U-Gas	Claus	1.58	17.9	23,580	N.S.	N.S.	Clean-up (N.S.)
Winkler	Claus	4.04	15.0	40,420	N.S.	N.S.	Clean-up (N.S.)

N.S. = Not specified
(1) Dry Gas.
(2) Does not include gas from auxiliary fuel gasification unit.
(3) Does not include gas from regenerator.
(4) N.S. if wet or dry gas.
(5) Does not include all CO_2 - 9.91 MM scfh vented separately.
(6) Does not include all CO_2 - 9.88 MM scfh vented separately.
(7) Estimated

Values shown in this table depend on the original bases chosen; plant sizes as well as other factors differ and direct comparison of the values is difficult. The process reports in references 3-10 should be consulted to determine each design basis, information sources, and qualifications (see Section 1.5) if individual numbers are to be utilized.

If the concentration of H_2S in the acid gas to the sulfur plant is very low, then a liquid phase recovery of sulfur is necessary as indicated above. The available processes have difficulty in removing compounds of sulfur other than H_2S. If the sulfur content is sufficiently high, the gas from these processes must be controlled. One technique could be incineration as in the Lurgi design. This may be necessary in any case since most acid gas removal processes also remove combustibles that must be removed or destroyed before venting. (See the Lurgi and Synthane processes as examples, Table 11.) The liquid processes also have a liquid effluent for which inceration may be required (32,33). The effluent may be quite large, amounting, in some cases, to 0.2 to 0.3 gal/lb sulfur recovered(33). The resulting solids from incineration must be examined to determine if mine disposal is safe as they may contain heavy metals such as vanadium or arsenic as well as soluble salts. It would also be wise to determine that no heavy metals enter the atmosphere during incineration.

2.11 Ash and Solids Disposal

2.11.1 Description of Ash and Solids Disposal

The solids from the gasifiers are removed in different ways depending on the process. The Koppers-Totzek process removes molten slag at low pressure and quenches it with water. The Winkler process, also at low pressure, removes the char via water cooled screw conveyors. The Lurgi process, at intermediate pressures, uses a lock hopper. The remaining processes are conceptual and suggested methods of removal are indicated in Table 15.

It should be pointed out that not all the solids are removed directly from the gasifiers. For example, in the Koppers-Totzek process, only about one-half the solids are removed directly; the remainder exits with the raw gas and is subsequently removed by an elaborate series of washing operations. Smaller amounts of dust are carried overhead in the Lurgi gasifier and are removed in a tar scrubber and a final wash before shifting. A major portion of the solids in the Winkler process is removed from the raw gas by cyclone, water scrubbing and an electrostatic precipitator. In all cases, sufficient care must be taken to assure essentially dust free gas before shifting.

2.11.2 Effluents to Air from Solids Disposal

There should be little air contamination from solids handling and disposal from the gasifiers. Odors may occur when ash or char is quenched, but this must be checked in each case. Care must be taken to prevent dusting; dust can be controlled by keeping the solids moist.

2.11.3 Liquids and Solids Effluents from Solids Disposal

The solids from the gasifiers represent the largest source of solids effluents (directly or later from their fuel use). The water quench streams are also very large.

Table 15

Solid Gasifier Product

Process	Type of Solid	Quantity of Solid, lb/hr	Type of Cooling, Removal	Solids Disposition	Liquid Disposition
Koppers-Totzek	Slag	111,500	Water quench	To mine	Recycle
Synthane	Char	362,200	Dry let-down, fluid bed	To power plant	--
Lurgi	Ash	314,000	Water cool, ash locks	To mine	Used in plant
CO_2 Acceptor	Char/Spent Acceptor	496,800	Char to regenerator Spent acceptor overhead, water cool	N.S.	Recycle
BI-GAS	Slag	68,400	Water quench, lock hoppers	N.S.	Steam to Reactor Water N.S.
HYGAS	Ash/Char	138,900	Water cool, lock hoppers	N.S.	Returned to system
U-Gas	Char	86,400	Water cooling venturi throat	N.S.	Returned to system
Winkler	Char	372,500	Water cooled screw conveyors	To power plant	--

---

N.S. = Not specified

Values shown in this table depend on the original bases chosen; plant sizes as well as other factors differ and direct comparison of the values is difficult. The process reports in references 3-10 should be consulted to determine each design basis, information sources, and qualifications (see Section 1.5) if individual numbers are to be utilized.

Chars that can be utilized as boiler fuel are, of course, directed to the steam plant. Other solids present more of a problem. Permanent mine storage has been suggested in a number of cases but this may not always be an environmentally acceptable solution. Although the metal content of the solids was originally removed from the mine, its physical and chemical nature has been changed so that its return to the mine could present problems. The major potential problem involves leaching of contaminants which may show up in surface water streams or in sub-surface water. If the soil contains sufficient clay, run-off will be the chief problem, but in sandy soils the ions can move considerable distances in the soil. In these cases, consideration must be given to providing an impervious layer of asphalt, concrete or other material to prevent movement of the inorganic materials. If surface movement is the only problem, impoundment would solve the problem.

Liquids that have been in contact with the ash or slag present similar problems as the solids themselves. Recycle of clarified water can be used as much as possible but a purge may be necessary to prevent continued build up of dissolved solids. This purge can be directed to impervious evaporation ponds.

Perhaps solids from other areas of the plant will present as much of a disposal problem as the ash from the gasifiers even though the quantity is lower. Purge streams from various units (e.g. sulfur recovery) may contain hazardous, soluble metallic ions. Incineration and mine disposal may be the answer in most cases, but each process must be examined individually and in detail. Care should be taken in incineration that hazardous metals do not escape into the atmosphere as vapors or entrained liquids or solids.

2.11.4 Process Alternatives in Solids Disposal

Although alternatives are available for solids removal and disposal, in general, when the individual process and operating conditions are considered, very few options exist. Problems connected with solids removal are discussed in reference 4 and in the section on the Synthane process in Appendix A. Consideration should be given in all cases to the possibility of recovering valuable chemicals from the solids before disposal.

2.12 Wastewater Treatment

The handling of the process and cooling water streams can represent one of the major pollution problems in coal conversion plants. These water streams have the potential for both air, water and land pollution if not handled properly as they can give off gaseous, liquid and solid wastes. For economic and other reasons many conversion plants are seriously considering recycling all process water to extinction. The water treatment systems will have to be designed specifically for each plant; no one process will be universally applicable. The variety of coal sources and gasifier operating conditions will differentiate the aqueous wastes in the various processes under development.

Water treatment in coal conversion plants is very much like that used in petroleum refineries and petrochemical plants. Reference 35 discusses in detail the treatment of aqueous wastes from such plants. Reference 36 outlines the design of such treatment facilities.

Water treatment technology for petroleum refineries can be classified as primary, secondary and tertiary. Primary treatment can be described as gross removal of materials, secondary treatment provides for reasonably clean effluents, and tertiary treatment methods are for polishing the effluent or for removal of special materials to acceptable levels. Some of the methods of each classification are listed in Table 16.

Wastewaters are generally segregated in some fashion such as oily water (including oily rainwater run off), high solids clean water, sour water, and very hazardous waters. These streams are handled separately to minimize the size of treatment units.

The treatment system necessary for each process has not been specified. A detailed examination of the individual process would be necessary, including stream analyses, before such a system could be outlined. Table 17 shows the quantities of water treated by the gasification plants studied here. The treatment of rainwater run-off, minor purges, etc. is not indicated. In most cases, secondary and tertiary treatment has not been determined.

High temperature processes such as Koppers-Totzek and BIGAS form negligible quantities of heavy organic materials and there is little sour water to be treated. In the Koppers-Totzek case, it has been suggested that the water from the particulate removal spray can be directed to a clarifier and then recycled. This water has been in contact with hydrogen sulfide and should dissolve a certain quantity of this toxic substance. The H_2S would be removed from the system in the cooling tower. Such practice should be checked to see if it meets reasonable air enviornmental requirements.

Some water may contain such materials as phenols, acids, ammonia and sulfur compounds. In many of the processes considered, the sour water stream is large and requires special treatment. This usually involves phenol removal by extraction with a suitable solvent and stripping to remove ammonia and hydrogen sulfides. The phenols can be sold as such, burned or recycled. The ammonia can be sold or burned while the hydrogen sulfide can be routed through the acid gas removal section. Water leaving the strippers still contains materials that cannot be allowed to enter the environment. This water is sent to secondary treatment.

Suspended matter is usually removed by coagulation or flocculation. The sludge from these operations can be disposed of with other sludges from, for example, biological oxidation. Techniques available are described in Reference 35 and include incineration and burial. Final solids disposal can be handled with the ash from the gasifier.

Following removal of the suspended matter, a biological oxidation unit (biox) may be used to reduce further the contaminant levels of the water. Several techniques are available for biological treating including

TABLE 16

CLASSIFICATION OF WASTEWATER TREATMENT METHODS

Primary Treatment

- Stripping
- Primary Incineration
- Neutralization
- Oil Separation

Secondary Treatment

- Activated Carbon Adsorption
- Chemical Coagulation
- Flocculation
- Air Flotation
- Biological Treatment
  - Aerated Ponds
  - Activated Sludge Processes
  - Trickle Filter Processes
  - Biological Oxidation in Cooling Towers

Tertiary Treatment

- Chlorination
- Activated Carbon Adsorption
- Evaporation
- Ozone Oxidation
- Ion Exchange
- Reverse Osmosis
- Dialysis
- Precipitation

Table 17

Dirty Water Treatment Systems of Gasification Plants

Process	Total Dirty Water Treated, lb/hr (1) (2)	Sour Water, lb/hr	Secondary Treatment Type	Tertiary Treatment
Koppers-Totzek	8,297,800 (3)	0	None	None
Synthane	1,773,900	1,311,100	N. S.	N. S.
Lurgi	1,644,500	1,282,000	Activated sludge	Evaporation ponds
CO_2 Acceptor	612,000 (3)	612,000	N. S.	N. S.
BI-GAS	686,000 (4)	86,000	N. S.	N. S.
HIGAS	809,600 (5)	809,600	N. S.	N. S.
U-Gas	397,400	230,800	N. S.	N. S.
Winkler	928,300 (5)	928,300	N. S.	N. S.

---

(1) Does not include rain water, miscellaneous purges, filter backwash, septic sewer, stack gas scrubber.
(2) Does not include "clean" water from condensate in oxygen plant, methanation or compression.
(3) Only clarifier treatment used and water is recycled.
Cooling tower blowdown is disposed of with ash in mine.
(4) Disposition of cooling tower blowdown N. S. S.
(5) Cooling tower blowdown not included; its disposition N. S.

N. S. = Not specified

Values shown in this table depend on the original bases chosen; plant sizes as well as other factors differ and direct comparison of the values is difficult. The process reports in references 3-10 should be consulted to determine each design basis, information sources, and qualifications (see Section 1.5) if individual numbers are to be utilized.

activated sludge treatment, aeration ponds, trickle filters and biological oxidation in cooling towers. Such techniques are very effective in removing phenol and reducing BOD but problems still exist. For example, an activated sludge system has been found inadequate in ammonium ion removal and erratic in its removal of cyanide and thiocyanate (37). It has been pointed out that reduction of BOD does not necessarily mean that all harmful organics have been removed (38). Materials such as polynuclear aromatics may not show up in a BOD test and, likewise, would not be removed by bacterial action in a biox unit. A third problem arises from the possibility of air pollution from biox units. The large liquid surface area necessary for transport of oxygen and carbon dioxide makes biox units ideally suited for stripping of contaminants into the air (39). This area of foul water treatment deserves close attention when used in a coal gasification plant for it would be very easy to convert a water pollution situation into an air pollution problem. A final problem with biological oxidation involves its sensitivity to upset conditions. Fluctuations in the concentration of contaminants in the water influent may cause a decrease in the biological activity. In some cases, the activity can be destroyed by a sudden increase in some component (e.g. cyanide).

Activated carbon adsorption can be used as a final polishing step after a biox unit or may be substituted for such a unit. The performance of carbon adsorption of materials from petroleum refinery effluent has been investigated (40). Advantages of activated carbon are that effluents are concentrated and can be disposed of rather easily and the system is relatively insensitive to fluctuations in contaminant concentrations. A disadvantage is the semi-batch nature of the process with its necessary regeneration step.

The use of API separators for bulk oil removal are usually necessary in gasification plants. Not only is it frequently necessary to treat oily process water, but rain water run off from process areas and tank farms contains oil that must be removed. It may be necessary to follow the separation with flotation units before sufficient oil is removed.

Non-oily rain water run-off can usually be impounded and used, after raw water treatment, as make-up water. Boiler blowdown water can also be used as cooling tower make-up water.

One of the larger streams in gasification plants is the blowdown from the cooling water system. Not only does this water contain large amounts of dissolved solids but may contain other contaminants introduced through leaks in heat exchangers, pump seals, etc. Furthermore, materials, such as chromimum, added to prevent algae formation in the cooling towers, present a special problem in water treatment. Chromimum can be precipitated before other treatment of the blowdown water or ion exchange can be used for metals removal. In the Koppers-Totzek and CO_2 acceptor processes, cooling tower blowdown is disposed of with ash in the mine. In the Lurgi process, final disposal is provided by evaporation ponds. Blowdown water may be eliminated by using softened water for cooling. Drift loss in the cooling towers keeps the solids level sufficiently low in the cooling water circuit. In areas where water is scarce, this total recycle of cooling water might be especially attractive.

In any gasification plant there will be minor streams to be considered. These will include minor purge streams, filter backwash, contaminated water from raw water treatment, etc. These streams must be considered individually and treatment may consist of special techniques such as neutralization, precipitation, incineration, and evaporation ponds.

In conclusion, it should be stated again that careful evaluation of waste water treatment is necessary. Care should be taken to see that contaminants are not transferred from the water to the air and proper management of solids, which are often the product of water treatment processes, is necessary. Further work in the area of water treatment is needed.

2.13 Power and Steam Generation

2.13.1 Alternatives in Power and Steam Generation

A number of alternatives exist as regards the methods and fuels used to generate power and steam and the resulting pollution problems. Our basis for design of all gasification plants has been one wherein the plants were self-sufficient with respect to steam and electrical requirements. Table 18 shows the steam and electricity requirements for each process, together with type and quantity of fuel and whether or not flue gas scrubbing is required.

No separate steam plant is required for the CO_2 Acceptor, U-Gas and Winkler plants. In fact, so much by-product high pressure steam is available in the CO_2 Acceptor process that all electricity needed in the plant and mine could be produced by bleeding the high pressure steam to 165 psi and 377,000 lb/hr of 165 psi steam would be available for sale.

The major area where a number of alternatives are available is that of fuel used to generate steam. Alternatives include the use of coal, clean intermediate product, clean final product, char, and manufactured low Btu gas. In the processes studied here, alternatives chosen are coal, char, and manufactured clean, low Btu gas. The use of manufactured gas or product gas decreases thermal efficiency of the overall process but has the advantage of low sulfur emissions. If coal or char is used as fuel, then stack gas scrubbing is frequently required to remove sulfur and particulates. This too, of course, reduces thermal efficiency over the use of coal or char alone and increases liquid or solid effluents.

In some cases an alternative to reduce sulfur emissions is the use of some clean product gas along with coal for fuel to the boilers. In this way, sulfur can be reduced to acceptable levels and particulates can be removed by electrostatic precipitators. This elminates the large quantities of spent limestone that must be disposed of from scrubbing operations. It was estimated that 150-200 tpd of sulfated lime would result from scrubbing the flue gas from the Synthane process (4).

Table 18

Generation of Steam and Electricity in Gasification Plants

Process	Steam Plant, lb/hr	Boiler Fuel Type	Boiler Fuel Quantity, lb/hr (MM Btu/hr)	Flue Gas Scrubbing	Total Steam Generated,* lb/hr High P	Total Steam Generated,* lb/hr Low P	Electrical Generation, kW
Koppers-Totzek	646,000	Coal	113,300 (1,000)	Yes	1,307,800	109,500	19,400
Synthane	2,840,000	Char	362,500 (3,980)	Yes	3,346,800	809,600	6,000
Lurgi	1,488,800 (1)	Low Btu gas	(1,725) (3)	No	3,067,900	1,263,100	58,500 (2)
CO_2 Acceptor	(4)	-	-	-	2,142,000 (4)	253,000	17,500
BI-GAS	1,329,400	Coal	179,600 (2,220)	Yes	2,931,200	670,600	41,900
HYGAS	N. S.	Low Btu gas	(2,923)	No	N. S.	N. S.	57,000
U-Gas	0	-	-	-	984,000	600,000	10,000
Winkler	0	-	-	-	753,800	502,500	20,000

N. S. = Not specified

* Extraction steam not included twice.

(1) Besides steam plant, 41,354,260 lb/hr saturated steam from methanation waste heat boiler is superheated from 562°F to 930°F in superheater using 430 MM Btu/hr of low Btu gas and 443 MM Btu/hr of off-gas from sulfur removal (the heating value of the latter is small)

(2) Includes 1,500 kW produced in oxygen plant

(3) Plus effluent from gas turbine

(4) No steam plant required; after producing electricity, 377,000 lb/hr excess steam available at 165 psig for sales

Values shown in this table depend on the original bases chosen; plant sizes as well as other factors differ and direct comparison of the values is difficult. The process reports in references 3-10 should be consulted to determine each design basis, information sources, and qualifications (see Section 1.5) if individual numbers are to be utilized.

If clean gas is used for fuel, the use of combined cycle operation becomes an alternative. This alternative has been used in the Lurgi, HYGAS and U-Gas designs.

2.13.2 Effluents from Power and Steam Generation

The effluents from the production of steam and electricity are given in Table 19. The major effluents are ash (when coal or char is used as fuel), flue gas, and heated cooling water when condensers on turbines are water cooled. The ash may be handled along with gasifier ash described in Section 2.11. Particulates, sulfur oxides and nitrogen oxides are the main consideration in the flue gas, although plume formation can sometimes be a problem. If coal is used, stack gas scrubbing may be necessary to reduce sulfur emissions. Less information is available on NO_x emissions; this subject was discussed in reference 5.

2.14 Cooling Water System

The cooling water system includes some of the largest streams in the plant and can represent a major source of pollution unless handled adequately. Table 20 summarizes some of the streams associated with the cooling water circuit.

The quantity of recirculated cooling water can be varied by the use of air-cooled heat exchangers where applicable. Cooling water is then used only for trim-cooling and low temperature heat transfer. The Lurgi design (5) is a good example of the use of air-fin cooling. In areas where water is scarce, the use of air cooling may be necessary. This method of cooling is not without debits, however. Added investments are necessary and electrical requirements are increased. Balanced against this is a reduction in water treatment and pumping costs. It has been estimated in one case that the decrease in thermal efficiency attendant to the use of air cooling is 1.5% (4).

The possibilities for air pollution caused by the cooling towers mainly result from leaks in equipment. Especially at high pressures, leaks in heat exchangers can result in contaminants being transferred to cooling water. These contaminants can enter the atmosphere with evaporated water or drift losses. The only technique for preventing such pollution is continuous monitoring of appropriate cooling water streams and provision of facilities for immediate removal of offending equipment from the system. This obviously requires spare equipment to allow for such removal from service.

The cooling water system is also a potential source of water pollution. Chemicals used to treat make-up cooling water may include chromium or zinc compounds, acids, chlorine and others. Some of these materials are toxic. Furthermore, because of evaporation, the concentration of dissolved solids builds up in the cooling water and must be purged. Drift loss acts as a purge and additional purge can, in some cases such as the Koppers-Totzek and CO_2 Acceptor processes, be used for ash quench with subsequent mine disposal. Waste water treatment was discussed in Section 2.12. There it was pointed out that one possibility for reducing water effluent would be to use softened water in the cooling water circuit.

Table 19

Effluents from Steam and Electricity Generation

Process	Boiler Fuel	Ash, lb/hr	Spent Limestone, lb/hr	Flue Gas, MM scfd	SO_x, lb/hr	NO_x, lb/hr	Cooling water, gpm
Koppers-Totzek	Coal	19,600	3,300	320	Less than 1.2 lb/MM Btu	N. S.	16,400
Synthane	Char	87,500	15,000	1,070	Less than 1.2 lb/MM Btu	N. S.	N. S.
Lurgi	Fuel Gas	nil	0	1,440 (1)	2,004	676	0 (3)
CO_2 Acceptor	(2)	(2)	(2)	(2)	(2)	(2)	N. S.
BI-GAS	Coal	12,000	44,500	625	Less than 1.2 lb/MM Btu	N. S.	N. S.
HYGAS	Low Btu gas	nil	0	905	Low	N. S.	N. S.
U-Gas	---	---	---	---	---	---	N. S.
Winkler	---	---	---	---	---	---	N. S.

N. S. = not specified

(1) Includes flue gas from steam superheater which includes incinerated gas from sulfur plant
(2) Does not include limestone regenerator
(3) Uses air-cooled condenser

Values shown in this table depend on the original bases chosen; plant sizes as well as other factors differ and direct comparison of the values is difficult. The process reports in references 3-10 should be consulted to determine each design basis, information sources, and qualifications (see Section 1.5) if individual numbers are to be utilized.

Table 20

Cooling Water Requirements and Effluents in Gasification

Process	Cooling Water Circulated	Cooling Tower Water, lb/hr: Blowdown	Drift Loss	Make-up	Air to Cooling Tower, MM scfd
Koppers-Totzek	73,764,000 (1)	302,000 (1)(2)	148,000	1,500,000	48,000
Synthane	50,000,000	250,000	150,000	1,700,000	20,000
Lurgi	65,000,000	105,000	130,000	1,405,000	N. S.
CO_2 Acceptor	21,450,000	N. S.	43,000	N. S.	15,000
BI-GAS	131,285,000	600,000	263,000	3,489,000	85,000
HYGAS	100,000,000	N. S.	200,000	N. S.	74,000
U-Gas	25,700,000	167,000	N. S.	891,000	16,000
Winkler	31,500,000	150,000	63,000	996,000	25,000

N.S. = Not specified

(1) Does not include cooling tower on water scrubber.

(2) Blowdown from utility cooling tower sent to scrubber.

Values shown in this table depend on the original bases chosen; plant sizes as well as other factors differ and direct comparison of the values is difficult. The process reports in references 3-10 should be consulted to determine each design basis, information sources, and qualifications (see Section 1.5) if individual numbers are to be utilized.

2.15 Raw Water Treatment

The gasification processes reviewed require raw water for make-up purposes. The treatment of this water will depend, of course, on the nature of the water as well as its ultimate use. In general, the water is treated with lime and filtered. A sludge stream from filter back wash is an effluent that must be disposed of; this can frequently be concentrated and returned to the mine with ash. Boiler feedwater make-up can be demineralized by ion exchange. The blow-down water from the demineralization must be treated; at least it must be neutrailized. Cooling tower water make-up will usually be treated with chemicals such as chromium to prevent algae formation. Other chemicals that may be included in raw water treatment include alum, chlorine and acids.

Table 21 summarizes the raw water treatment operations in gasification.

2.16 Miscellaneous Plant Sections

This section presents a brief review of other plant installations that are not common to all processes. These are the acceptor regeneration section of the CO_2 Acceptor process and the low Btu fuel gas generation facilities in the Lurgi and HYGAS processes.

2.16.1 CO_2 Acceptor Regeneration

The dolomite Acceptor in the CO_2 Acceptor process removes sulfur and CO_2 in the reaction section. This reacted dolomite is removed from the reactor and passes to a regenerator section. The char from the reactor section is burned with air in the regenerator section to regenerate the acceptor material which is then returned to the reactor. The hot gas produced by the char combustion is used to superheat steam and its CO content is reduced by addition of more air. The hot exhaust gases then pass through an expansion turbine.

Dust, separated by cyclones from the hot gases, passes to ash desulfurization where it is reacted with carbon dioxide and water to form $CaCO_3$ and H_2S. The sulfur-containing gas from the desulfurizing unit passes to the acid gas removal unit and the ash is handled as discussed in Section 2.13. A more detailed description of the regeneration section is given in Appendix A.

The feed and effluents to the regenerator section are tabulated in Table 22.

2.16.2 Low Btu Fuel Gas Production in the Lurgi Process

In the design of the Lurgi process used in this study, fuel needs are supplied by fuel gas with 229.1 Btu/scf higher heating value. This gas is produced in a Lurgi gasifier operating at 285 psig and using air as the oxygen source. The system is very similar to the Lurgi high Btu gas train except for the use of air for gasification, a hot carbonate acid gas removal unit instead of the Rectisol unit used in the main train, and the lack of methanation which is not required. The low and high Btu gas operations cannot be combined because of contamination of the high Btu

Table 21

Raw Water Treatment in Gasification

Process	Raw Water Treated, lb/hr	Chemicals Added, lb/hr	Sludge from Water Treating, lb/hr	Water Treatment Sludge Disposal	Contaminated Water from Water Treatment, lb/hr	Contaminated Water Disposal
Koppers-Totzek	1,575,100	N. S.	N. S.	Concentrated; to mine	N. S.	Neutralized; ash slurry
Synthane	N. S.	N. S.	N. S.	N. S.	N. S.	N. S.
Lurgi	2,531,000	N. S.	90,000	Evaporation Ponds	275,000	Ash quench
CO_2 Acceptor	1,420,000	N. S.	N. S.	Concentrated; to mine	N. S.	Neutralized; ash slurry
BI-GAS	3,489,000	N. S.	N. S.	N. S.	N. S.	N. S.
HYGAS	3,536,000	N. S.	N. S.	Dispose of with char	N. S.	N. S.
U-Gas	1,245,000	N. S.	N. S.	Dispose of with ash	N. S.	N. S.
Winkler	1,197,000	N. S.	N. S.	N. S.	N. S.	N. S.

N.S. = Not specified

Values shown in this table depend on the original bases chosen; plant sizes as well as other factors differ and direct comparison of the values is difficult. The process reports in references 3-10 should be consulted to determine each design basis, information sources, and qualifications (see Section 1.5) if individual numbers are to be utilized.

Table 22

Feed and Effluents of the CO_2 Acceptor Regeneration Section

Material	Quantities
Inputs	
Char, lb/hr	496,810
Reacted acceptor, lb/hr	7,977,000
Air, scfh	44,500,000
Dolomite makeup, lb/hr	254,454
CO_2, scfh	600,000
Water, lb/hr	15,800
Outputs	
Regenerated acceptor, lb/hr	7,164,000
Carbonated ash slurry (50% water), lb/hr	466,000
Acid gas, scfh	450,000
Flue gas, scfh	57,300,000

gas with nitrogen, but waste liquids and liquid by-products are combined. Thus, the coal tar, ash, gas liquor and acid gas produced in the low Btu complex is combined with those materials from the high Btu system for ultimate disposal. A major portion of the product gas is heated, by burning a portion of the product, and expanded through an expander turbine to provide part of the air compression energy requirements of the low Btu complex.

The disposition of the low Btu fuel gas is shown in Table 23. The inputs and outputs of the low Btu plant are given in Table 24.

2.16.3 Low Btu Fuel Gas Production in the HYGAS Process

Fuel for coal drying and for the utility furnace in the HYGAS process is provided as low Btu fuel gas from a U-Gas gasifier. The U-Gas process was the object of a special process report (9) and has been described in that report. Therefore, no special description will be given here. The major inputs and outputs of the production of low Btu gas for use in the HYGAS process is given in Table 25.

Table 23

Disposition of the Low Btu Fuel Gas in the Lurgi Process

Gas Disposition	Volume, MM scfd
Burned internally to heat gas for expander turbine on air compressor	19.5
To gas turbines in oxygen plant	82.1
To steam super heater	44.9
To power boilers	180.2

Table 24

Inputs and Outputs of the Lurgi Low Btu Gasification System

Material	Quantities
Inputs	
Steam (to gasifier), lb/hr	258,060
Boiler feed water, lb/hr	54,440
Air (including 3,679 lb/hr water), MM scfd (dry)	184.0
Coal, lb/hr	440,000
Outputs	
Low Btu product gas (HHV, 229.8 Btu/scf), MM scfd (dry)	307.2
Ash, lb/hr	80,224
Coal tar, lb/hr	21,846
Boiler blowdown, lb/hr	560
Gas liquor, lb/hr	213,165
Acid gas, MM scfd (dry)	40.3
Flue gas (low sulfur)	not specified
Utility Requirements	
Steam, lb/hr	166,600
Electricity, kW	4,230
Cooling water, gpm	2,000

Table 25

Major Inputs and Outputs of the Low Btu Gasification Plant Used in the HYGAS Process

Material	Quantity
Inputs	
Coal, lb/hr	273,800
Air (to gasifier), MM scfd (dry)	309.3
Air (for sulfur acceptor regeneration, MM scfd	17.2
Steam, lb/hr	213,300
Quench water, lb/hr	333,300
Make-up chemicals to remove sulfur	not specified
Outputs	
Fuel gas (33 MM scfd for coal preparation), MM scfd	482
Char slurry, lb/hr (dry)	37,500
Dust	not specified
SO_2 stream (to sulfur recovery), lb/hr	66,400

3. COAL LIQUEFACTION PLANTS

Preliminary designs have been made for the COED process, the SRC process and the H-Coal process. A summary is given of the results of these design studies, including unit descriptions, effluents to the air, solid and liquid effluents and process alternatives. General comparisons of the processes are almost meaningless since the coal feeds are different and the products are completely different.

3.1 General Description of Coal Liquefaction Plants

In descriptions of the pollution aspects of coal gasification plants in previous sections of this report, it was possible to take advantage of the similarities in the total processing schemes to subdivide all processes into groups of major sections. Such a grouping is not as easy for coal liquefaction processes. This is a result of the significant differences in the nature of the liquefaction and in the different natures of the products formed.

Plants producing liquids from coals that are being used or investigated can be classified into three types. These are the Fischer-Tropsch process which produces liquids from synthesis gas that has been produced by coal gasification, coal pyrolysis as in the COED process being developed by the FMC Corporation, and coal hydrogenation. The latter type can be further subdivided into non-catalytic hydrogenation as in the Solvent Refined Coal process (SRC) of the Pittsburg and Midway Coal Mining Company and catalytic hydrogenation as in the H-Coal process being developed by Hydrocarbon Research, Inc. The Fischer-Tropsch process was not studied in the present work, but process reports have been issued on the other processes (41, 42, 43).

The plant outputs from the COED, SRC and H-Coal processes are quite different. COED produces, besides the liquid and gaseous products, a relatively large quantity of char, the SRC process produces mainly a heavy liquid product that solidifies above ambient temperatures, and the H-Coal process produces mainly a synthetic crude oil with some by-product gas.

A rough generalization of the areas required to produce these products can be made and a generalized scheme is shown in figure 3. In the main liquefaction train there are four areas common to all three processes. These are coal storage and preparation (grinding, drying, etc.), coal liquefaction, product separation and hydrotreating. Hydrotreating, in the H-Coal case, is carried out simultaneously with liquefaction. Hydrogen production is another major segment of the complex and the main train for this operation is similar to the gasification processes discussed in Section 2. Finally there are the auxiliary facilities, such as the oxygen plant, acid gas plant, utilities, etc. which are necessary for operation of the other segments of the processes. These facilities have been described in Section 2 for gasification.

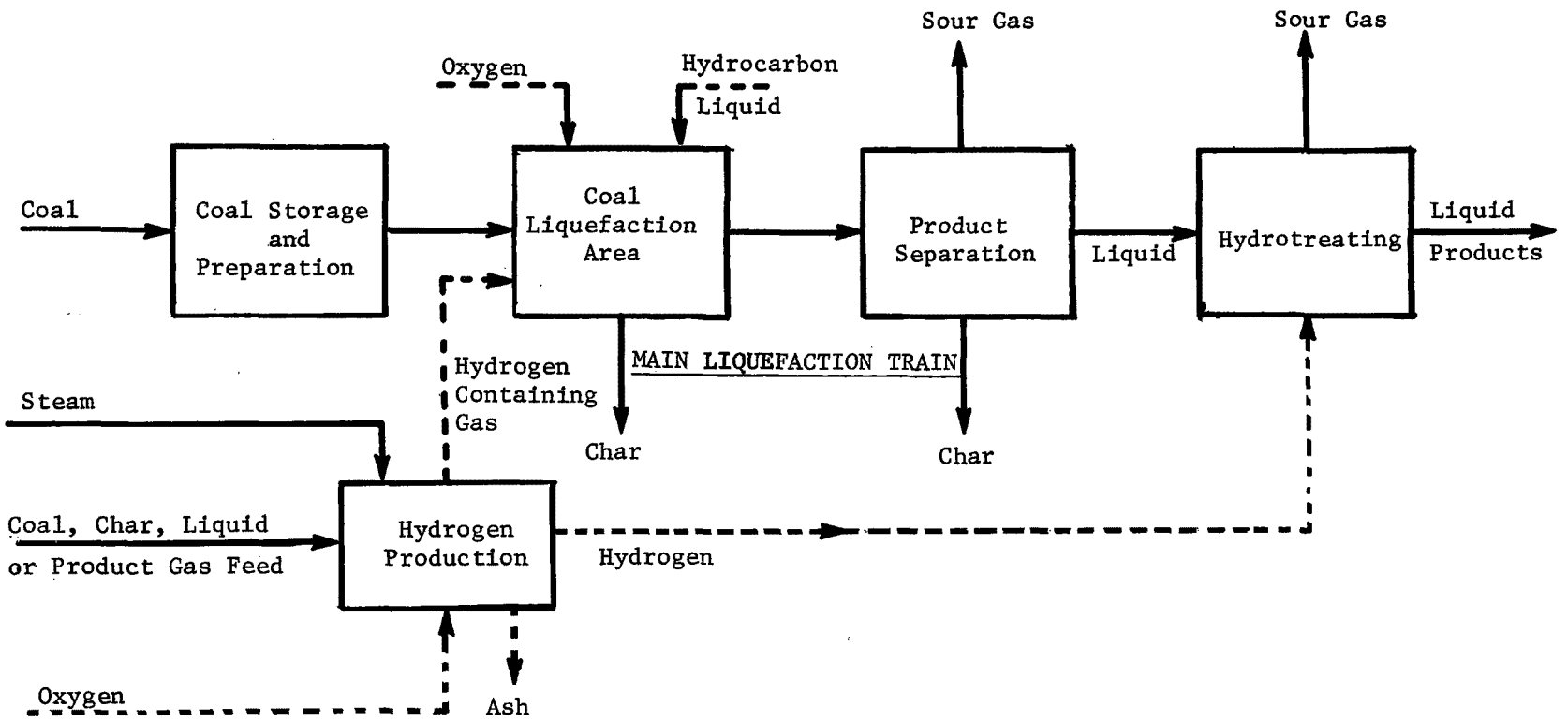

HYDROGEN PRODUCTION

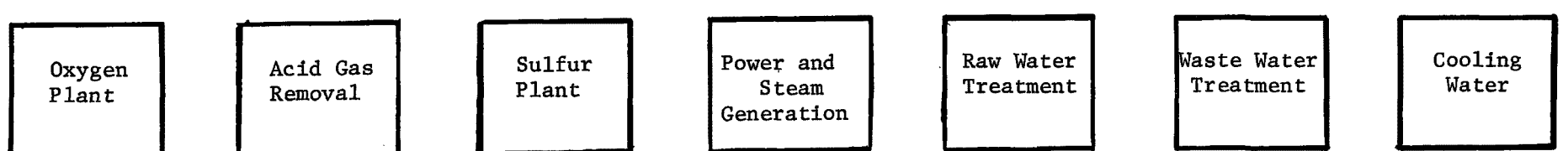

AUXILIARY FACILITIES

Dotted lines indicate streams absent in some plants

Figure 3

Generalized Coal Liquefaction Scheme

A more detailed description of the processes studied is given in Appendix B. For further details, the reader is referred to the process reports (41, 42, 43).

3.2 Main Liquefaction Train

3.2.1. Coal Storage and Preparation

In general, the description, effluents and alternatives in the area of coal storage and preparation are the same as those described in section 2.2 for gasification.

Table 26 summarizes the coal storage and preparation operations and Table 27 gives the analysis of the coals used in the processes. It should be noted that the SRC process only has three days storage and that, furthermore, gross coal cleaning takes place within the liquefaction complex with the removal of about 200,000 lb/hr of solids. This must be disposed of, possibly in the mine.

Table 28 summarizes operations of the coal dryers. In the COED process, partial drying is effected during milling operations using clean fuel gas. Drying operations are included with liquefaction. The SRC process uses coal with enough clean fuel gas to reduce sulfur emissions to that required by new coal-fired power sources. The H-Coal process makes use of clean fuel gas to fire the dryer.

3.2.2 Coal Liquefaction

Table 29 summarizes the liquefaction types and conditions. As indicated earlier, the COED process produces liquids by coal pyrolysis, the SRC process hydrogenates coal in a slurry and the H-Coal process uses an ebullating bed of slurry to hydrogenate coal with a catalyst. Table 30 shows the inputs to the reactors and Table 31 shows the outputs. The H-Coal process burns 65,800 lb/hr of clean fuel gas in a pre-heat furnace.

The only major effluent from this area is in the COED gas purge stream and in the flue gas streams. The flue gas should be relatively clean since clean fuels are used. The purge stream from the COED process is indicated to contain a relatively large quantity of combustibles and should, perhaps, be incinerated. It contains the equivalent of 250MM Btu/hr and is indicated to be sulfur free.

Leaks on high pressure equipment in the SRC and H-Coal processes may present problems from an atmospheric pollution viewpoint as well as liquids pollution. Water run-off from the process areas must of course be collected and treated.

Table 26

Coal Storage And Preparation Operations - Liquefaction

Process	Coal Type	Quantity Stored, tons	Size of Coal Feed	Fuel for Coal Drying	Other Operations
COED	Illinois No. 6	891,000	<16 mesh (minimum fines)	Fuel gas	--
SRC	Illinois No. 6	37,500	<1/8"	Fuel gas/coal	Extensive physical cleaning
H-Coal	Illinois No. 6	1,000,000	<40 mesh	Fuel gas	--

Values shown in this table depend on the original bases chosen; plant sizes as well as other factors differ and direct comparison of the values is difficult. The process reports in references 3-10 should be consulted to determine each design basis, information sources, and qualifications (see Section 1.5) if individual numbers are to be utilized.

Table 27

Coal Analysis - Liquefaction

Process	Coal Type	Proximate Analysis, %				Ultimate Analysis (MAF), %					Higher Heating Value, Btu/lb
		Fixed Carbon	Volatiles	Ash	Moisture	C	H	N	S	O	
COED	Illinois No. 6	44.0	32.0	10.0	14.0	75.5	5.5	1.2	4.6	13.2	12,420(1)
SRC	Illinois No. 6	35.58	47.82	6.59	10	78.46	5.20	1.19	3.75	11.40	12,821(2)
H-Coal	Illinois No. 6	37.8	43.3	8.9	10	78.5	6.0	1.1	5.5	8.9	12,983(3)

---

(1) 5.9% Moisture

(2) 2.7% Moisture

(3) Dry

Values shown in this table depend on the original bases chosen; plant sizes as well as other factors differ and direct comparison of the values is difficult. The process reports in references 3-10 should be consulted to determine each design basis, information sources, and qualifications (see Section 1.5) if individual numbers are to be utilized.

Table 28

Coal Drying

Process	Fuel	Quantity, lb/hr	Heating Value, MM Btu/hr	Dried Coal Moisture Content, Wt. %	Dryer Vent Gas, lb/hr
COED(1)	--	--	--	--	--
SRC	Plant fuel gas/ Coal	6,853 2,700	150	2.7	244,300
H-Coal	Plant fuel gas	11,667	542	0	457,200

(1) Drying included with liquefaction

Values shown in this table depend on the original bases chosen; plant sizes as well as other factors differ and direct comparison of the values is difficult. The process reports in references 3-10 should be consulted to determine each design basis, information sources, and qualifications (see Section 1.5) if individual numbers are to be utilized.

Table 29

Liquefaction Descriptions and Operating Conditions

Process	Type	Temperature, °F	Pressure, psig	Major Reactor Products
COED	Fluid bed pyrolysis	Stage 1, 550-600 Stage 2, 850 Stage 3, 1,050 Stage 4, 1,550	8	Char, gas, liquid
SRC	Non-catalytic hydrogenation	840	1,000	Gas, char slurried in high melting liquid
H-Coal	Catalytic hydrogenation-ebulating bed	850	2,000	Gas, ash in liquid

Values shown in this table depend on the original bases chosen; plant sizes as well as other factors differ and direct comparison of the values is difficult. The process reports in references 3-10 should be consulted to determine each design basis, information sources, and qualifications (see Section 1.5) if individual numbers are to be utilized.

Table 30

Inputs to Liquefaction Reactors

(lb/hr, except as noted)

Process	Coal	Btu/lb Coal	Steam (Water)	Recycle Slurry	Gas	Combustion Air	Oxygen,	Transport Gas
COED	2,126,000(1)	12,420	507,200	--	48,600(4)	732,000	313,000	94,100
SRC	833,300(2)	12,821	110,500	1,666,700	740,300(5)	811,900	--	--
H-Coal	2,083,300(3)	12,983	--	4,166,700	92,000(6)	--	--	--

---

(1) 5.9% moisture

(2) 2.7% moisture

(3) Dry

(4) Natural gas. Does not include approximately 288,500 lb/hr gas recycled through char cooler.

(5) Syngas. Does not include 1,039.5 MM Btu/hr of fuel gas to preheat slurry

(6) Consists of make-up hydrogen. Does not include 65,800 lb/hr of fuel gas (1,580 MM Btu/hr) to preheat slurry or an unspecified quantity of recycled, hydrogen-containing gas.

(7) Oil only

Values shown in this table depend on the original bases chosen; plant sizes as well as other factors differ and direct comparison of the values is difficult. The process reports in references 3-10 should be consulted to determine each design basis, information sources, and qualifications (see Section 1.5) if individual numbers are to be utilized.

Table 31

Outputs From Liquefaction Reactors
(lb/hr)

Process	Raw Product	Char	Gas	Water
COED	2,174,500	1,042,600	732,000 (2)	187,000
SRC	3,689,700 (1)	--	873,200 (3)	--
H-Coal	N.S. (1)	--	N.S.	N.S.

N.S. = Not specified

(1) Total product; includes char

(2) Purge gas must be treated due to high CO concentration

(3) Relatively clean flue gas

Values shown in this table depend on the original bases chosen; plant sizes as well as other factors differ and direct comparison of the values is difficult. The process reports in references 3-10 should be consulted to determine each design basis, information sources, and qualifications (see Section 1.5) if individual numbers are to be utilized.

3.2.3 Products Separation

The raw product stream from liquefaction contains solids, liquids and gases and these must be separated. Table 32 shows the raw product composition. Most of the char in the COED process is removed during liquefaction, but a small portion exits the liquefaction section in the liquid-gas stream.

Heat is recovered from the raw products and the phases are separated. Product gas is passed to acid gas removal. Solids and liquids are separated by filtration in the COED and SRC processes and by vacuum distillation in the H-Coal process. The small quantity of oily solids from the COED process is recycled to coal feed. In the H-Coal process, 4,166,700 lb/hr of product oil is recycled to the slurry tank and the vacuum bottoms are used to produce hydrogen.

3.2.4 Hydrotreating

The H-Coal process does not have a hydrotreating section. In the COED and SRC processes, the liquid products from filtration are treated with hydrogen to reduce sulfur, nitrogen and oxygen compounds, and to hydrogenate unsaturated materials. Hydrogenation takes place at elevated temperatures and pressures.

The major effluents from hydrotreating are flue gases to the air and sour water. Since clean product fuel gas is used for fuel, the flue gases should be relatively clean. The sour water from the COED process is returned to the high temperature liquefaction reactor while it is sent to water treatment in the SRC case. Table 33 summarizes the inputs to the hydrotreating sections and Table 34 summarizes the output streams.

The liquid products from the hydrotreating area are sent to storage tanks.

3.3 Hydrogen Production

The production of hydrogen is similar in many respects to gasification which was discussed in Section 2. No attempt is made here to repeat that discussion, but a summary description of the hydrogen production facilities will be given. The reader is referred to Appendix B for more details or to the individual process reports (41, 42, 43).

In the COED process, by-product gas from the liquefaction process is mixed with cleaned bleed gas from the hydrogenation unit and fed to steam reforming reactors. Here it is reacted with steam to produce hydrogen and CO_2. The CO_2 is removed by acid gas absorption and residual carbon monoxide is removed by methanation. The product hydrogen stream is available for hydrogenation.

In the SRC operation, synthesis gas is available from the gasification section (see Section 3.6). This is shifted with steam to produce hydrogen, followed by CO_2 removal and methanation.

Table 32

Raw Product To Product Separation
(lb/hr)

Process	Liquid	Solid	Gas
COED	846,000	27,400 (1)	1,025,400 (2)
SRC	452,000	441,400	958,083
H-Coal	N.S.	N.S.	N.S.

N.S. = Not specified

(1) Oily solids; most char exits separately from reactors.

(2) Not including transport gas

Values shown in this table depend on the original bases chosen; plant sizes as well as other factors differ and direct comparison of the values is difficult. The process reports in references 3-10 should be consulted to determine each design basis, information sources, and qualifications (see Section 1.5) if individual numbers are to be utilized.

Table 33

Input Streams To Hydrotreating

(lb/hr)

Process	Product Oil	Hydrogen Make-up	Stripping Gas	Fuel Gas	Combustion Air	Water or Steam
COED	371,800	56,800	205,600	(1)	(1)	--
SRC	405,400	8,200	--	9,500	125,700	29,600
H-Coal	--	--	--	--	--	--

(1) 167 MM Btu/hr fuel gas and required combustion air.

Values shown in this table depend on the original bases chosen; plant sizes as well as other factors differ and direct comparison of the values is difficult. The process reports in references 3-10 should be consulted to determine each design basis, information sources, and qualifications (see Section 1.5) if individual numbers are to be utilized.

Table 34

Output Streams From Hydrotreating

(lb/hr)

Process	Liquid Products	Sour Gas	Stripping Gas	Sour Water	Flue Gas
COED	328,800	58,200	214,000	33,200	N.S.
SRC	385,750(1)	15,900	--	41,400	135,156
H-Coal	--	--	--	--	--

N.S. = Not specified

(1) Not including 10,100 lb/hr to plant fuel

Values shown in this table depend on the original bases chosen; plant sizes as well as other factors differ and direct comparison of the values is difficult. The process reports in references 3-10 should be consulted to determine each design basis, information sources, and qualifications (see Section 1.5) if individual numbers are to be utilized.

In the H-Coal process, bottoms from vacuum distillation are gasified in a Texaco type partial oxidation process, along with supplementary coal, with steam and oxygen. Solids are removed from the gas which then is passed through an acid gas removal step and to a shift reactor. Carbon dioxide is removed from the hydrogen which is then passed to the liquefaction section.

The major effluents from hydrogen manufacture are flue gases, CO_2 from acid gas removal and any purge from the acid gas removal units. The flue gases should be relatively clean since clean fuel is used. The CO_2 effluent should be clean but this should be checked in the case of the SRC process to be sure that COS is not admitted to the shift section. The waste water stream may contain carbonates and additives from the hot carbonate acid gas removal units. Its exact nature is unknown and should be ascertained.

Inputs to hydrogen production are shown in Table 35 and outputs are summarized in Table 36.

3.4 Auxiliary Facilities

As in gasification, auxiliary facilities have been included to make the liquefaction plants self sufficient. These facilities have been discussed in detail under gasification and will only be summarized here.

3.4.1 Oxygen Plants

Oxygen is required in the liquefaction complexes studied in this work and plants to produce the oxygen have been included. Oxygen plant descriptions and effluents have been discussed in the gasification section. Table 37 summarizes the oxygen requirements.

3.4.2 Acid Gas Removal

Although in liquefaction, as opposed to gasification, acid gas removal is not a part of the main train, such facilities are required to clean up various ancillary gas streams. A description of the processes has been given, along with effluents, in the gasification section.

All the plants require what may be called "primary" units for removal of a mixture of CO_2 and sulfur compounds. One primary unit is indicated for the COED process but two might be required; one would be used for streams from hydrotreating that contain ammonia. The ammonia could, however, be removed in a separate operation. Three primary units are required for the SRC process, one on recycle syngas, one on bleed gas from hydrotreating and one on syngas production. The latter is separate from the recycle gas unit because a part of the syngas produced is used for hydrogen production. The H-Coal process has two such plants, one on the recycle gas stream to liquefaction and one on the syngas prior to shifting in hydrogen production.

Table 35

Input Streams to Hydrogen Production

(lb/hr)

Process	Raw Material	Gasifier Steam	Oxygen	Other Steam and Water	Fuel Gas	Air
COED	108,000(1)	(2)	--	(2)	46,000	N.S.
SRC	255,100(3)	77,500	163,700	563,600	7,100	93,800
H-Coal	653,300(4)	177,800	414,000	1,528,300	--	--

N.S. = Not specified

(1) Mixture of clean product gas and hydrotreater off-gas

(2) 86,000 lb/hr net water consumption

(3) Mixture of char, ash and heavy liquid

(4) Mixture of heavy bottoms and coal

Values shown in this table depend on the original bases chosen; plant sizes as well as other factors differ and direct comparison of the values is difficult. The process reports in references 3-10 should be consulted to determine each design basis, information sources, and qualifications (see Section 1.5) if individual numbers are to be utilized.

Table 36

Output Streams from Hydrogen Production

(lb/hr)

Process	Hydrogen	Synthesis Gas	Ash	Steam	Flue Gas/CO_2	Water	Acid Gas
COED	56,800	--	--	N.S.	N.S.(1)	N.S.	--
SRC	8,200	303,200	108,300(2)	331,500	168,300	129,700	111,600
H-Coal	92,000	--	222,300	508,000	1,104,800(3)	554,800	291,500

N.S. = Not specified

(1) 120,000 lb/hr CO_2 removed from raw hydrogen stream

(2) Water slurry containing 59,400 lb/hr slag

(3) CO_2 vent; contains 19,800 lb/hr water vapor

Values shown in this table depend on the original bases chosen; plant sizes as well as other factors differ and direct comparison of the values is difficult. The process reports in references 3-10 should be consulted to determine each design basis, information sources, and qualifications (see Section 1.5) if individual numbers are to be utilized.

Table 37

Oxygen Requirements - Liquefaction Processes

Process	Oxygen Required, lb/hr	Oxygen Required, lb per MM Btu in Liquefaction Feed Coal
COED	313,000	11.9
SRC	163,700	15.3
H-Coal	414,000	14.2[1]

---

(1) Includes coal to gasifier

Values shown in this table depend on the original bases chosen; plant sizes as well as other factors differ and direct comparison of the values is difficult. The process reports in references 3-10 should be consulted to determine each design basis, information sources, and qualifications (see Section 1.5) if individual numbers are to be utilized.

Besides the primary acid gas removal facilities, each plant requires a final CO_2 removal that may be referred to as "secondary" acid gas removal. These take out essentially pure CO_2 which can be vented.

Details of the acid gas removal facilities are summarized in Table 38.

3.4.3 Sulfur Recovery

Sulfur plants, including effluents and alternatives have been described previously. Table 39 summarizes available information on the sulfur plants used in the liquefaction complexes.

3.4.4 Ash and Solids Disposal

The disposal of ash and solids was discussed in Section 2. The type and quantity of ash from the COED process is uncertain since the type fuel is not completely specified. There is a large fraction of the coal input that is high Btu char; this will require disposition with recovery of heat equivalent. In the SRC process, the filter cake is gasified in a BIGAS type system. This was described in Section 2 above. The principal effluent consists of 108,300 lb/hr of a water slurry containing 59,400 lb/hr of ash. The H-Coal process has 222,300 lb/hr of ash from the hydrogen production section. Its fate is not specified.

There will, of course, be other solids from water treatment, etc. to be disposed of. These will be handled by methods similar to those used for gasification complexes.

3.4.5 Wastewater Treatment

Process wastewater in the COED process is injected into the last pyrolysis stage of the liquefaction section. Most of the sour water in the SRC process is injected into the coal slurry prior to liquefaction. Table 40 summarizes wastewater treatment information for liquefaction.

A discussion of wastewater treatment was given in Section 1. A general discussion of wastewater treatment has also been given in prior process reports (41, 42).

3.4.6 Electricity and Steam Generation

Table 41 summarizes the steam and electricity produced in the liquefaction plants. The H-Coal process uses high sulfur coal with stack gas scrubbing. The COED and SRC processes use fuel gas supplemented in the former case with char and in the latter case with clean product. The COED flue gas would require scrubbing.

Table 38

Liquefaction Acid Gas Removal Facilities

Process	Type of Removal: Primary ($H_2S + CO_2$)	Type of Removal: Secondary (CO_2 Only)	Type of Sulfur Guard	Quantity of Gas Treated, lb/hr: Primary	Quantity of Gas Treated, lb/hr: Secondary	Quantity of Acid Gas Removed, lb/hr: Primary	Quantity of Acid Gas Removed, lb/hr: Secondary	H_2S Concentration in Primary Acid Gas, Volume %
COED	Hot carbonate(1)	N.S.	ZnO	1,297,400	N.S.	658,500	120,000	7.2(1)
SRC	Monoethanolamine/caustic(2)	Hot carbonate	---	1,438,400	149,000	469,900	67,400	7.6
H-Coal	Alkanolamine	Hot carbonate	---	N.S.	1,751,600	386,700	1,104,750	35.6

N.S. = not specified

(1) Separate unit may be necessary for ammonia containing streams.

(2) Three units required, one on recycle syngas, one on bleed gas from hydrotreating, and one on syngas production.

Values shown in this table depend on the original bases chosen; plant sizes as well as other factors differ and direct comparison of the values is difficult. The process reports in references 3-10 should be consulted to determine each design basis, information sources, and qualifications (see Section 1.5) if individual numbers are to be utilized.

Table 39

Sulfur Recovery In Liquefaction Systems

Process	Type of Sulfur Recovery	Quantity of Primary Acid Gas	H_2S Concentration, Volume %	Sulfur Produced, lb/hr	Sulfur in Tail Gas, vppm	Tail Gas Disposal
COED	Claus	658,500	7.2	42,500	N.S.	Beavon
SRC	Claus	469,900	7.6	26,400	N.S.	Beavon
H-Coal	Claus	386,700	35.6	107,900	N.S.	N.S.

N.S. = Not specified

Values shown in this table depend on the original bases chosen; plant sizes as well as other factors differ and direct comparison of the values is difficult. The process reports in references 3-10 should be consulted to determine each design basis, information sources, and qualifications (see Section 1.5) if individual numbers are to be utilized.

Table 40

Wastewater Treatment For Liquefaction Plants

Process	Total Wastewater Treated, lb/hr (1) (2)	Sour Water, lb/hr	Secondary and Tertiary Treatment
COED	1,494,900	0 (3)	--
SRC	532,200 (4)	178,700 (5)	biox pond
H-Coal	1,177,100	752,100	biox pond

---

(1) Does not include rain runoff

(2) Does not include miscellaneous streams

(3) Sour water incinerated in final reactor

(4) Does not include coal wash water

(5) Does not include 110,500 lb/hr injected to coal slurry

Values shown in this table depend on the original bases chosen; plant sizes as well as other factors differ and direct comparison of the values is difficult. The process reports in references 3-10 should be consulted to determine each design basis, information sources, and qualifications (see Section 1.5) if individual numbers are to be utilized.

Table 41

Generation Of Steam And Electricity In Liquefaction Plants

Process	Steam Plant, lb/hr	Boiler Fuel		Total Steam Generated, lb/hr		Flue Gas Scrubbing	Electrical Generation, kW
		Type	Quantity, MM Btu/hr	High P(1)	Low P(1)(2)		
COED	782,800(2)	Fuel gas/ char	2,032(3)	1,151,000(4)	485,800(4)	Yes	95,370
SRC	715,300	Fuel gas/ liquid product	1,484	1,228,700(4)	298,520(4)	No	64,090
H-Coal	2,178,000	Coal	3,267	3,236,000	0	Yes	50,000

---

(1) Does not include extraction steam.

(2) 150 psig or less.

(3) Includes fuel for electrical generation.

(4) Does not include steam for electrical generation.

Values shown in this table depend on the original bases chosen; plant sizes as well as other factors differ and direct comparison of the values is difficult. The process reports in references 3-10 should be consulted to determine each design basis, information sources, and qualifications (see Section 1.5) if individual numbers are to be utilized.

Effluents from steam and electricity production are similar to those in gasification and are summarized in Table 42.

3.4.7 Cooling Water System

Table 43 summarizes the cooling water requirements and effluents. The large volume of air from the cooling towers offers a significant potential for atmospheric pollution. The cooling tower blow-down contains chemicals and may require special treatment. These effluents have been discussed in more detail in the section on gasification.

3.4.8 Raw Water Treatment

Raw water treatment and effluents were described in the gasification section. Table 44 summarizes the information on raw water treatment in liquefaction.

3.5 Products from Liquefaction Plants

As indicated above, the COED process produces a synthetic crude oil and a high Btu char, the SRC process produces a low melting solid fuel product and the H-Coal process produces a synthetic crude oil and has excess by-product gas.

Table 45 lists the properties of the synthetic crude from the COED process, Table 46 lists those for the products from the SRC process and Table 47 lists the properties of the H-Coal liquids product. Table 48 lists the properties of the char product from COED process. Table 49 lists the other products from the three liquefaction processes.

3.6 Miscellaneous Facilities

The SRC process produces synthesis gas used in liquefaction and for hydrogen production. The oily filter cake from product separation, together with oil, is gasified with steam and oxygen to produce the synthesis gas. The gasification system is a modification of the BI-GAS process described in Section 2 and Appendix A.5. Table 50 lists the inputs to and outputs from the syngas plant.

Table 42

Effluents From Steam And Electricity Production In Liquefaction

Process	Boiler Fuel	Ash, lb/hr	Flue Gas, lb/hr	Spent Limestone, lb/hr	SO_x, lb/hr	NO_x, lb/hr
COED	Fuel gas/char	12,800	N.S.	N.S.	Low	N.S.
SRC	Fuel gas/ liquid product	--	1,246,600(1)	--	Less than 1.2 lb/MM Btu	N.S.
H-Coal	Coal	24,900	3,121,000	39,400	Low	N.S.

N.S. = Not specified

(1) Includes flue gas from firing turbine

Values shown in this table depend on the original bases chosen; plant sizes as well as other factors differ and direct comparison of the values is difficult. The process reports in references 3-10 should be consulted to determine each design basis, information sources, and qualifications (see Section 1.5) if individual numbers are to be utilized.

Table 43

Cooling Water Requirements And Effluents From Liquefaction

Process	Cooling Tower Water, lb/hr				Air to Cooling Tower, MM scfd
	Cooling Water Circulated	Blowdown	Drift Loss	Make-up	
COED	100,000,000	1,200,000	300,000	4,500,000	N.S.
SRC	60,600,000	302,000	100,000	1,333,000	31,000
H-Coal	100,000,000	425,000	100,000	2,642,000	69,500

N.S. = Not specified

Values shown in this table depend on the original bases chosen; plant sizes as well as other factors differ and direct comparison of the values is difficult. The process reports in references 3-10 should be consulted to determine each design basis, information sources, and qualifications (see Section 1.5) if individual numbers are to be utilized.

Table 44

Raw Water Treatment In Liquefaction

Process	Raw Water Treated, lb/hr	Chemicals Added, lb/hr	Sludge From Water Treating, lb/hr	Water Treatment Sludge Disposal	Contaminated Water From Water Treatment, lb/hr	Contaminated Water Disposal
COED	3,795,000	N.S.	N.S.	N.S.	N.S.	N.S.
SRC	1,813,000	N.S.	N.S.	Concentrate; dispose of with slag	N.S.	N.S.
H-Coal	3,140,000	N.S.	N.S.	Concentrate; dispose of with ash	N.S.	N.S.

N.S. = Not specified

Values shown in this table depend on the original bases chosen; plant sizes as well as other factors differ and direct comparison of the values is difficult. The process reports in references 3-10 should be consulted to determine each design basis, information sources, and qualifications (see Section 1.5) if individual numbers are to be utilized.

Table 45

COED Syncrude Properties*

Product Quantity, lb/hr	328,800
API, °@60°F	22
Pour Point, °F	0
Flash Point, PMCC, °F	60
Viscosity, cs. @ 100°F	5
Ultimate Analysis, wt. %	
C	87.1
H	10.9
N	0.3
O	1.6
S	0.1
Ash	<0.01
Moisture	0.1
ASTM Distillation	
IBP	190
10%	273
30%	390
50%	518
70%	600
90%	684
EP (95%)	746
Metals, ppm	<10
% Carbon Residue, 10% Bottoms	4.6
Hydrocarbon Type Analysis, Liquid Vol. %	
Paraffins	10.4
Olefins	0
Naphthenes	41.4
Aromatics	48.2

---

* Properties depend on severity of operation of hydrotreating unit.

Table 46

SRC Process - Major Streams From Plant

NET PRODUCTS

1. 242,900 lb/hr of heavy liquid, with a sulfur content of 0.5%.

Higher heating value	16,660 Btu/lb
Gravity	-9.7° API

2. 120,200 lb/hr of hydrotreated liquid, with a sulfur content of 0.2%.

Boiling range	400 to 870°F
Higher heating value	18,330 Btu/lb
Gravity	13.9° API

3. 22,700 lb/hr of hydrogenated light oils with the following approximate characteristics.

Boiling range	C_4 - 400°F
Gravity	52° API
Nitrogen	5 ppm
Sulfur	1 ppm

Table 47

Liquid Product from H-Coal Process

Synthetic Crude (91,240 b/d)	1,201,300 lb/hr

Synthetic Crude Inspections

Gravity, ^{o}API	25.2
Hydrogen, wt. %	9.48
Sulfur, wt. %	0.19
Nitrogen, wt. %	0.68

Table 48

Product Char Analysis From The COED Process

	PRODUCT CHAR
Quantity, lb/hr	1,042,600
Proximate Analysis, wt. %	
Volatile Matter	2.5
Fixed Carbon	75.5
Ash	21.1
Moisture	1.0
Ultimate Analysis, wt. % dry	
Carbon	73.8
Hydrogen	0.8
Nitrogen	1.0
Sulfur	3.2
Oxygen	0.0
Ash	21.2
High Heating Value, Btu/lb	11,700

Table 49

Other Products From Liquefaction

Process	Products, lb/hr			
	By-Product Fuel Gas	Sulfur	High Btu Char	Ammonia
COED	0	42,500	1,042,600 (1)	0
SRC	0	26,400	0	0
H-Coal	100,800 (2)	107,900	0	17,100

---

(1) See Table 48 for description

(2) HHV = 24,000 Btu/lb (900 Btu/scf); H_2 content = 56 Vol. %

Values shown in this table depend on the original bases chosen; plant sizes as well as other factors differ and direct comparison of the values is difficult. The process reports in references 3-10 should be consulted to determine each design basis, information sources, and qualifications (see Section 1.5) if individual numbers are to be utilized.

Table 50

Inputs And Outputs Of SRC Syngas Plant

Material	In, lb/hr	Out, lb/hr
Char Slurry	255,100	-
Oxygen	163,700	-
Steam	77,500	331,500
Water	437,100	29,100
Fuel Gas	2,440	-
Air	33,000	-
Slag Slurry	-	108,300
Flue Gas	-	35,400
Acid Gas	-	111,583
Clean Syngas	-	352,800

4. COAL TREATING

The Meyers process, being developed by TRW, Inc., is the only coal treating process examined in detail in this study. The description of the process, effluents, and alternatives are discussed in this section.

4.1 Description of the Meyers Process

In the Meyers process, the pyrites in ground coal are removed by leaching with ferric sulfate according to the equation

$$FeS_2 + 4.6Fe_2(SO_4)_3 + 4.8H_2O \longrightarrow 10.2FeSO_4 + 4.8H_2SO_4 + 0.8S$$

The ferric sulfate is regenerated with oxygen and sulfuric acid according to the equation

$$9.6FeSO_4 + 4.8H_2SO_4 + 2.4O_2 \longrightarrow 4.8Fe_2(SO_4)_3 + 4.8H_2O$$

The sulfur formed in the reaction is dissolved in a light hydrocarbon solvent and removed from the solid coal product by filtration. The sulfur is subsequently recovered by solvent evaporation. A portion of the iron sulfates is removed as a solution from the solid product by filtration and is subsequently precipitated and filtered and then leaves the plant as solids.

The solvent and some water are removed from the product which is then ready for use as a solid fuel.

The total treating complex is self sufficient with respect to steam, oxygen and electricity. Such facilities have been discussed in previous sections of this report.

For a more detailed description of the Meyers process, the reader is referred to Appendix C or to the original process report (44).

4.2 Feed, Products, Utilities and Effluents of the Meyers Process

Table 51 shows the analysis of the feed coal and coal product in the Meyers process. The inputs and outputs of the plant are shown in Table 52. Utility requirements of the process are shown in Table 53. Product coal is burned to provide steam.

Table 51

Analysis Of Feed Coal And Coal Product Of The Meyers Process

	Feed Coal (Dry)[1] (Lower Kittanning)	Product Coal (Dry)[2]
Proximate Analysis, wt %		N.S.
Fixed C	58.48	
Volatile Matter	20.66	
Air	20.86	
Ultimate Analysis, wt %		N.S.
C	68.53	
H	3.85	
N	1.20	
S	3.92	
O	1.56	
Cl	0.08	
Ash	20.86	
Sulfur Forms, wt %		
Pyritic	3.21	0.17
Sulfate	0.04	0.03
Organic	0.67	0.71
Elemental	-	0.04
HHV, Btu/lb (Dry)	12,140	12,748

N.S. = Not specified

(1) Feed Coal assumed to contain 10% moisture

(2) Product Coal contains 16.62% moisture

Table 52

Inputs And Outputs Of The Meyers Process

	Input[1], lb/hr	Output[1], lb/hr
Coal	220,000	210,318[2]
Air		
To Process	31,556	-
To Boiler	141,229	-
To Cooling Tower	12,700,000	-
From Cooling Tower		12,700,000
Solvent	200	-
Water	153,850[3]	135,560[4]
Flue Gas	-	154,570
Sulfur	-	2,438
Iron Sulfates	-	16,258
Nitrogen	-	24,050
Ash	-	2,541
Vents	-	1,100

---

(1) Does not include inputs and outputs of flue gas scrubbing
(2) Includes moisture
(3) As liquid water
(4) From cooling tower

Table 53

Utility Requirements Of The Meyers Process

Steam, lb/hr	120,000[1]
Electricity, kW	4,530
Product for Fuel, (Dry), lb/hr	13,234
Water, lb/hr	
Raw water required	153,850
Boiler feed makeup	6,000
Cooling water makeup	135,560
Cooling tower drift loss	14,160
Cooling tower blowdown	21,400

---

(1) High pressure steam. Also uses 120,000 lb/hr extracted steam.

Major effluents from the plant that could cause problems include the iron sulfates, cooling tower blowdown, vents and flue gas. It was assumed that the iron sulfates would be impounded permanently and that the cooling tower blowdown would be evaporated in a holding pond. For the specific coal used in the study, the product coal contained more sulfur than allowed under Federal regulations and flue gas scrubbing was assumed. The vents, containing small amounts of solvent, would be incinerated.

Major process alternatives involve methods of separation of the various phases in the process. The reader is referred to the original process report for details.

5. THERMAL EFFICIENCY

5.1 General

The thermal efficiency of a process is a qualitative indication of certain aspects of the process' effect on the environment. (The thermal efficiency is the percentage of the coal heating value that is retained in useful products.) For example, it is an indication of the disturbances associated with the mining of the raw fuel. It is also a measure of the heat released to the environment and, in this respect, is some indication of the possible water requirements.

Perhaps the greatest benefits from the consideration of thermal efficiency, especially when a detailed examination of it is made, are the ideas for process improvements that may emerge. The reaction,

$$\text{Coal} + H_2O \longrightarrow CH_4 + CO_2 + \text{By-products},$$

representating overall coal gasification to high Btu gas, is endothermic. When the theoretical amount of coal is burned to supply the heat for this reaction, the theoretical thermal efficiency is 100%. Since the heating value of the useful products from coal gasification is less than that of the coal to the plant, part of the heat must be degraded to the point where it is no longer useful and is rejected to the environment. A consideration of the reasons for conversion of the energy of the coal to sensible heat, reasons for the degradation of the heat and ways of conserving the heat can lead to ideas for improvements in the processes to reduce their environmental impact.

Perhaps no other parameter of fuel conversion processes is as difficult to quantify, in such a way that the results can be compared for different processes, as the thermal efficiency. On the other hand, except for "cost per million Btu," probably no other number can generate as much interest. The difficulties associated with comparing the thermal efficiencies of two processes arise from sources other than from the process itself. These are discussed below in an attempt to prevent erroneous conclusions from being drawn in making such comparisons.

5.2 Non-Process Related Factors Affecting Thermal Efficiency

One of the first major differences in thermal efficiencies of two processes can be caused by differences in the coal feeds to the processes. A high moisture content in the coal throws a heavier heat load on the coal drier; a lower hydrogen to carbon ratio means that more

hydrogen must be produced from water within the process and this leads to a heat loss; a high ash content requires more energy for handling and grinding and more heat is lost as sensible heat in the rejected solids; a high sulfur content in the feed coal can cause a heavier load on acid gas removal facilities and can require flue gas scrubbing or the use of clean product as fuel for heat sources. All of these properties of the feed coal can have a significant bearing on the ultimate overall thermal efficiency of the process.

The nature of the final products plays an important role in determining the thermal efficiency of a process. Of major importance is the type of fuel products desired. If a large fraction of the fuel products consists of solid, high Btu char then the thermal efficiency tends to be high because the char can be thought of as a stream of coal that has by-passed the process and retains its original heating value. Liquid products require less hydrogen than synthetic natural gas (SNG) and this leads to a higher thermal efficiency for liquids production than for SNG. This fact tends to increase the thermal efficiency of a gasification process if a significant fraction of the products is liquid. The question then naturally arises as to whether or not the heating value of the liquids should be included in the thermal efficiency, especially if only gaseous products are desired and the liquids are a nuisance. Another major difference in thermal efficiencies results from the type of gaseous products desired. If a low Btu gas is suitable then air can be used for gasification and the high energy losses associated with oxygen production and methanation are avoided. If a medium Btu gas is required (for example, as synthesis gas) then an oxygen plant is usually necessary but methanation is avoided. SNG production, of course, requires a methanation plant and usually an oxygen plant. The desired pressure of the gaseous product can also have a large affect on the thermal efficiency.

Another large effect on the thermal efficiency is caused by environmental considerations. For example, the type of fuel used for steam generation is significant. The use of feed coal tends to give the highest and the use of clean product the lowest thermal efficiencies. Quite often however, the use of coal requires flue gas clean up, and this leads to other environmental problems such as, for example, disposal of solid wastes from the scrubbing operation. Another environmental consideration that affects thermal efficiency is water availability and use. Air fin cooling can replace cooling water to a large extent, but decreases thermal efficiency. Cooling tower blowdown can be cleaned for reuse, but again, thermal efficiency is decreased. Any unit added to decrease pollutant discharge will, of course, decrease thermal efficiency.

Another area that can have a major effect on thermal efficiency is related to the conservatism of the designer and to the degree of engineering optimization. Obviously, more heat can be recovered by the use of more heat exchangers, heat pumps, power recovery from high pressure liquids, etc., but cost or other considerations might limit such use. In some cases, heat conservation can be increased with the use of equipment whose reliability is uncertain. The limits of cost and reliability used by the designer can significantly affect the thermal efficiency of the plant. Such effects are difficult to point out in comparisons of the thermal efficiency of two processes.

5.3 Thermal Efficiencies of Processes Investigated

The thermal efficiencies of the processes investigated and described in sections 2 to 4 were estimated. These were overall estimates based on products produced and coal fed. In most cases, variations in the thermal efficiencies were estimated for different assumptions concerning boiler fuel and other alternatives of the processes.

The results for gasification are given in table 54. Several values are presentd which correspond to various assumptions: when only the gaseous product is considered, when total combustible products (including sulfur and ammonia) are used in the calculations, and for the range of thermal efficiencies for the alternatives considered.

Thermal efficiencies for liquefaction are tabulated in table 55 The efficiencies for liquefaction are confused by the presence of non-liquid products. Thus, in the COED process, the solid char represents a larger portion of the product than the liquid. Since the char still contains considerable sulfur, it cannot be considered a clean fuel, and this clouds the picture as to how to include it in the thermal efficiency. Similarly, the H-coal process produces excess gas. This gas is, however, clean and could be used directly if a need were present.

The Meyers process was the only coal treating process investigated in depth. The thermal efficiency was 92.5% including the sulfur product and utilizing cleaned coal for fuel.

5.4 Detailed Losses in Thermal Efficiency

As indicated previously, losses of thermal efficiency represent heat that is rejected to the environment. It is of interest to know where this heat leaves the process and how. Obviously, the heat leaves as sensible heat or is rejected to cooling water or to air, but what process units are responsible for the losses is of much more interest.

The point at which heat leaves the overall complex can be pinpointed but the unit responsible for the loss is not so easy to ascertain. For example, sensible heat in the raw product stream is usually recovered down to the level where the cost of recovery becomes too great (or to the level where there is no use for the heat). The plant unit where this final low level heat is rejected to the atmosphere is not responsible for the total loss. This loss should, in some way, be prorated over the entire plant, but how this should be done is not evident. Similarly, losses from steam generation should be prorated over those units requiring steam. This can be done.

As an example, to give some indication of the units responsible for the energy losses, the Lurgi process was examined in more depth. This process was chosen because it was representative of the most complicated gasification sequence, that of producing high Btu SNG, and because considerable information was available. In carrying out this study the total heating value of materials

Table 54

Thermal Efficiency in Gasification

Process	Basic Efficiency, % (1) (2)	Efficiency Including By-products, %(1)	Efficiency Range of Alternatives Considered, %
Koppers-Totzek	62.3(3)	62.5(3)	53.0 - 69.0(3)
Synthane	59.3(4)	64.3(4)	59.3 - 66.0
Lurgi	55.1(5)	67.3	52.9 - 67.3
CO_2 Acceptor	62.4	67.7(9)(10)	60.2 - 67.7(10)(11)
BI-GAS	65.9	66.8	61.8 - 66.8(12)
HYGAS	64.2(6)	70.5	60.3 - 70.5
U-Gas	69.6(7)(8)	70.8(8)	68.1 - 70.8(8)
Winkler	67.6(3)(9)	68.9(3)	66.8 - 68.9(3)

---

(1) Coal as fuel.
(2) No by-products included, no debit for flue gas scrubbing.
(3) Medium Btu gas.
(4) Char to boiler, no drying required.
(5) Base case is 52.9% with clean fuel gas to boiler; no drying required.
(6) Base case is 60.3% with clean fuel gas to boiler and drying.
(7) Base case is 68.1% with clean product gas as fuel.
(8) Low Btu gas.
(9) Base case is 66.8% with clean product gas as fuel.
(10) Includes by-product steam and electricity.
(11) Efficiency is 76% if only medium Btu gas is produced.
(12) Efficiency is 77% if only medium Btu gas is produced.

Values shown in this table depend on the original bases chosen; plant sizes as well as other factors differ and direct comparison of the values is difficult. The process reports in references 3-10 should be consulted to determine each design basis, information sources, and qualifications (see Section 1.5) if individual numbers are to be utilized.

Table 55

Thermal Efficiency in Liquefaction

Process	Base Thermal Efficiency, %[1]	Range of Thermal Efficiency, %
COED	72.2[2]	57.6 - 72.2
SRC	64.0	60.3 - >70
H-Coal	77.0[3]	67.7 - 77.0

---

(1) Includes all net products
(2) Char accounts for 46.3% out of 72.2%.
(3) Includes 7.5% for clean by-product gas.

Values shown in this table depend on the original bases chosen; plant sizes as well as other factors differ and direct comparison of the values is difficult. The process reports in references 3-10 should be consulted to determine each design basis, information sources, and qualifications (see Section 1.5) if individual numbers are to be utilized.

out of each unit plus the sensible heat of useful products out of the unit were subtracted from the heating value and sensible heat of materials entering the unit (including electricity). It was impossible to take into account a number of minor streams and vents but these were indicated to be small enough to cause no major change in the results. The difference in the total heat to the unit and total heat in useful materials out of the unit represents the thermal loss from that unit. This loss occurs to cooling water, air cooling or as sensible heat in waste materials such as ash and carbon dioxide.

Table 56 shows the percentage loss for the major areas in the gasification plant. The first column includes the utilities area and the fuel gas production area. Since these areas exist only to supply energy to the other areas, their losses should be prorated to those areas utilizing this energy. This has been done and the results are shown in the second column of table 56. The second column gives a better perspective of the energy debits incurred by each process unit.

There are numerous qualifications of table 56, all of which are not quantified. These latter include the miscellaneous minor streams not taken into account, rather insignificant sensible heats of streams not included and miscellaneous vents. One item noted in the table involves losses in methanation and pipeline compression. In the design, extraction turbines were used for the compressors in these two areas whereas in most other areas condensing turbines were used. Since the use of extraction turbines in these two areas is due to process optimization and since the latent heat losses do not appear in these areas, an estimate was made of the losses from these areas when steam losses were evenly distributed to steam drives according to horsepower. The losses in methanation and pipeline compression are then approximately 11.9% and 6.9% respectively. The other areas losses would all be reduced sufficiently to match this increase. Part of the steam drive for electricity generation is also furnished by an extraction turbine. This was not corrected because electric power is spread rather evenly over all units.

Another type of qualification that must be made to table 56 involves those losses which have been subjectively assigned to a specific unit. Especially significant are losses associated with the shift and cooling area. The majority of the losses in this area is due to final cooling of the main gas stream before purification and not to any large electrical or compression debits. Ideally, these cooling losses should be distributed over other areas but no locigal way of doing this is evident.

Table 56

Thermal Losses by Unit in Lurgi Gasification

Plant Section	Percent of Total Energy Loss	
	Before Proration of Utility and Fuel Gas Losses	After Proration of Utility and Fuel Gas Losses
Coal Preparation	0.4	2.2
Oxygen Production	13.4	22.6
Gasification and Quench	5.7	22.8
Shift and Cooling	14.3 (1)	14.5 (1)
Purification	15.1	18.7
Methanation	6.7	7.7 (3)
Pipeline Compression	1.1	1.7 (3)
Sulfur Recovery	1.3	2.4
Gas Liquor Treating	6.4	7.4
Utilities	17.5 (2)	---
Fuel Gas Production	18.1	---

---

(1) Major losses due to cooling--see text.
(2) Includes miscellaneous areas totaling 0.4%.
(3) Extraction turbines used; if total losses in condensing steam to steam drives is distributed evenly, these numbers become 11.9% for methanation and 6.9% for pipeline compression with equivalent reductions in all other areas.

6. STREAM ANALYSIS FOR TRACE ELEMENTS AND OTHER POTENTIAL POLLUTANTS

6.1 General

One of the areas of coal conversion that is the most difficult to evaluate is the control of pollution by trace elements in coal and by trace organic compounds formed during conversion operations. The main difficulty is the paucity of analytical data from streams in coal conversion plants. A fair amount of data is available on trace elements in coal (1) but the fate of these elements in a gasification or liquefaction plant is largely unknown. Some qualitative data are available on carbon containing compounds formed in coal conversion, but little quantitative data are available. From the data available on trace elements and other trace compounds in coal conversion systems, it is difficult to decide if a problem with these materials exists. Information that has been collected under this contract together with a test plan to determine the fate of trace materials in coal conversion are presented in this section.

6.2 The Fate of Trace Elements in Coal Conversion

6.2.1 Trace Elements in Coals

A large amount of data has been accumulated on coals and coal ash under U.S. Bureau of Mines (USBM), U. S. Geological Survey (USGS), and the Illinois State Geological Survey (USGS). This material as well as that from other sources was surveyed and summarized in an early phase of this project. The data are summarized here in figure 4 for elements by regions. (A represents the Appalachian region, IE and IW are the Interior Eastern and Interior Western regions, N refers to the Great Northern Plains region, W indicates the Western region and SW symbolizes the Southwestern area of the Western region.)

In figure 4, USBM data for ppm on ash are shown at the top, and the USGS data on a coal basis at the bottom. The bar graphs for coal are the 90+% ranges, the dotted lines (---) are the extremes listed, and the regional average (•) is for the total region as given by USGS. This average is usually near the middle of the bar or may exceed it when there are many extremes, as for copper or zinc. Ranges which start below the limit of detection are shown by a broken bar line below 1 ppm in figure 4. Shorter dotted lines (--) represent values outside the 90+% range which were included in the USGS average but excluded here because they were for beds less than 75% analyzed. Artificially high specimen sample values for mercury are indicated by a O, and Δ shows the high values for weathered samples, not included in the averages.

The bar graphs for most elements, thus adjusted, lie within the range of 1 to 50 ppm, and mostly close to 5-10 ppm on coal. The only elements significantly higher than this are boron and fluorine, in the range from 10 to 200 ppm. Beryllium is lower in all regions by an order of magnitude, at about 0.1 to 5 ppm, and Hg by two orders of magnitude, at about 0.01 to 0.5 ppm on coal.

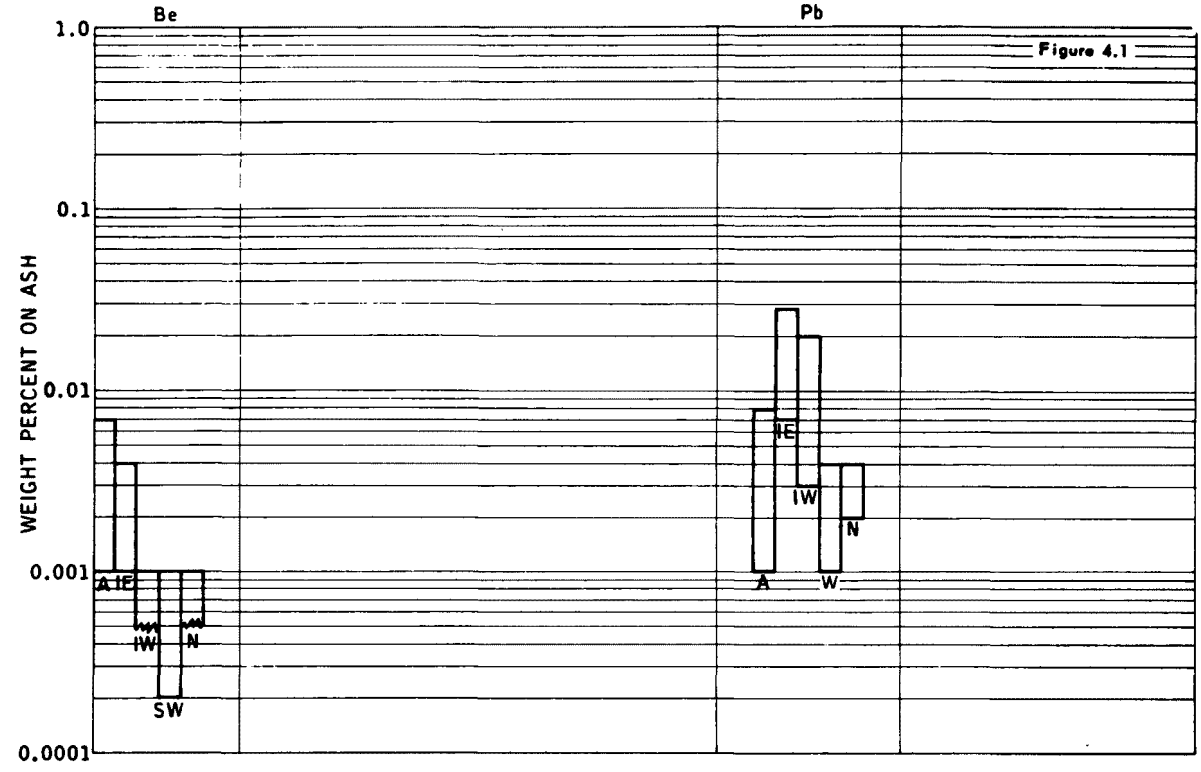

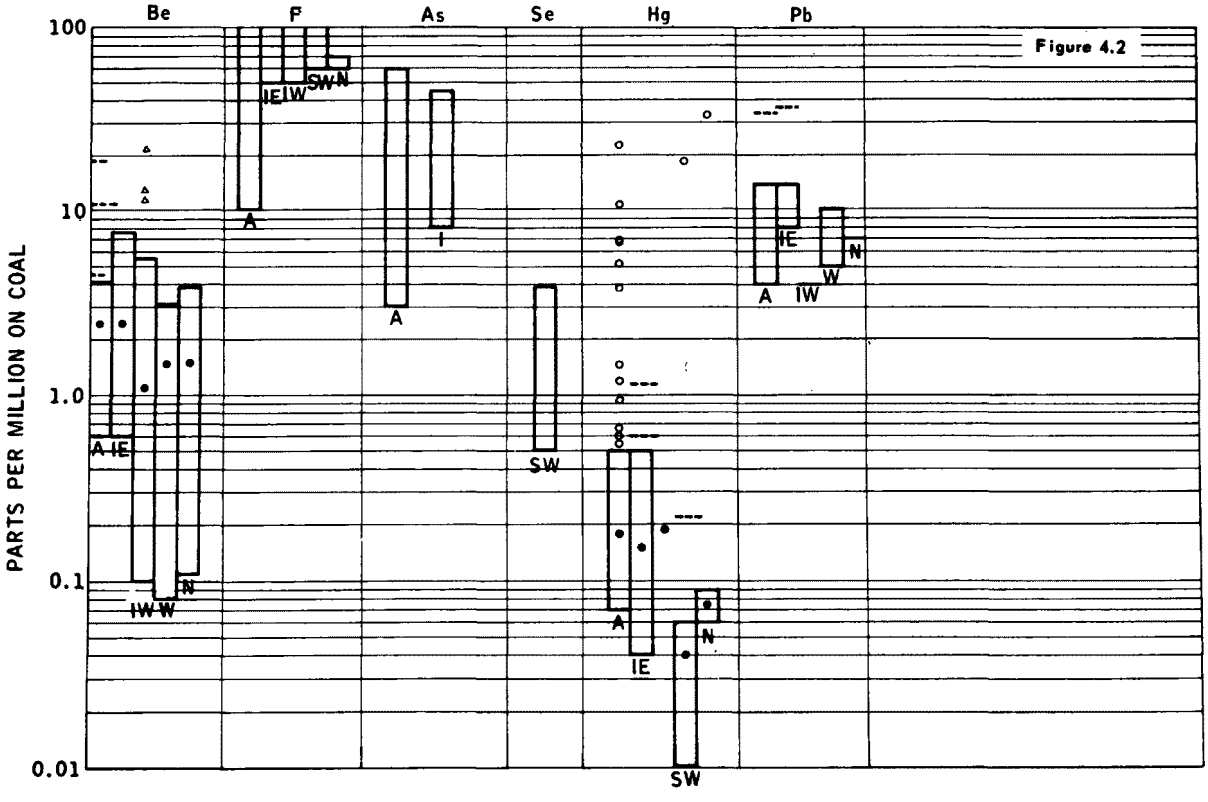

Figure 4

Trace Elements in U.S. Coals

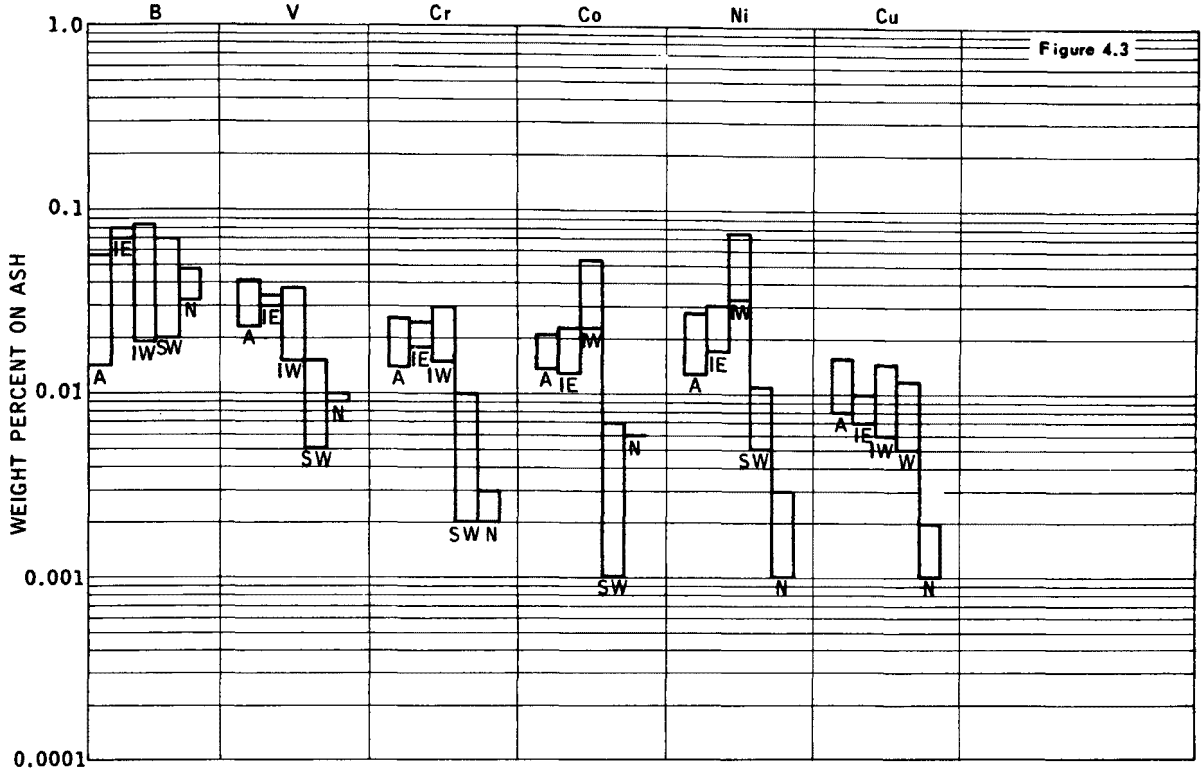

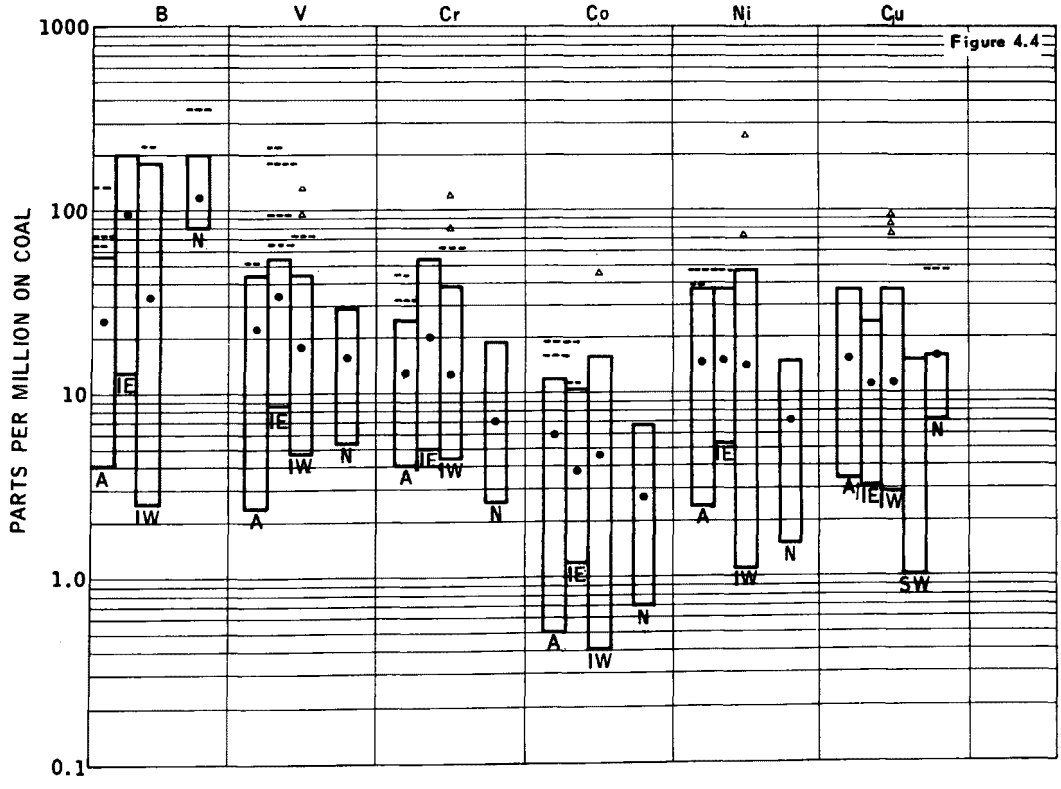

Figure 4 (Cont'd)

Trace Elements in U.S. Coals

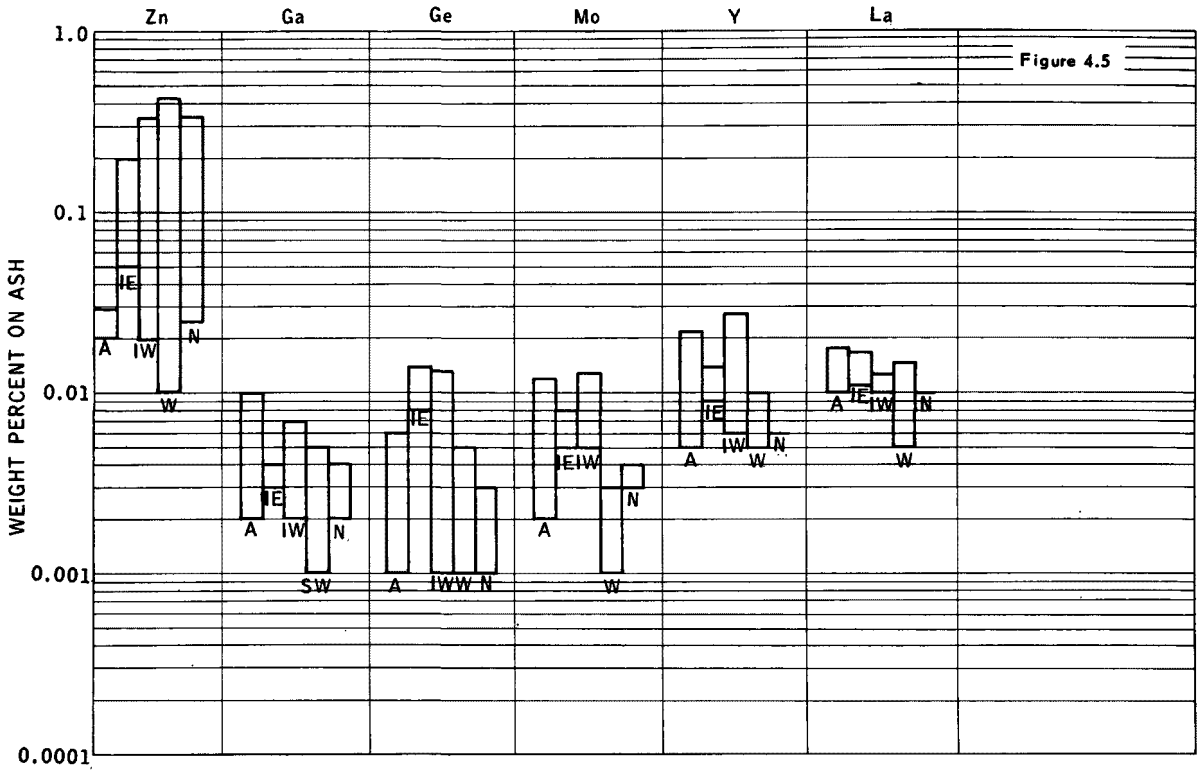

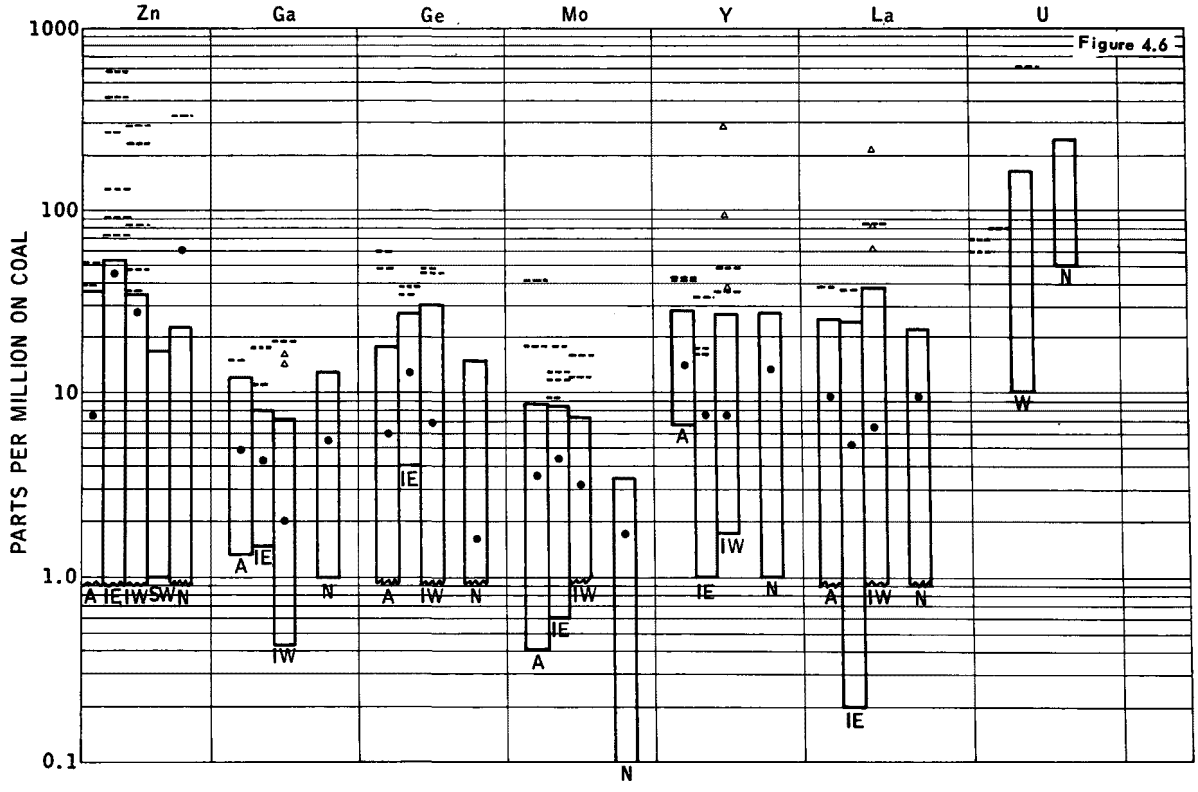

Figure 4 (Cont'd)

Trace Elements in U.S. Coals

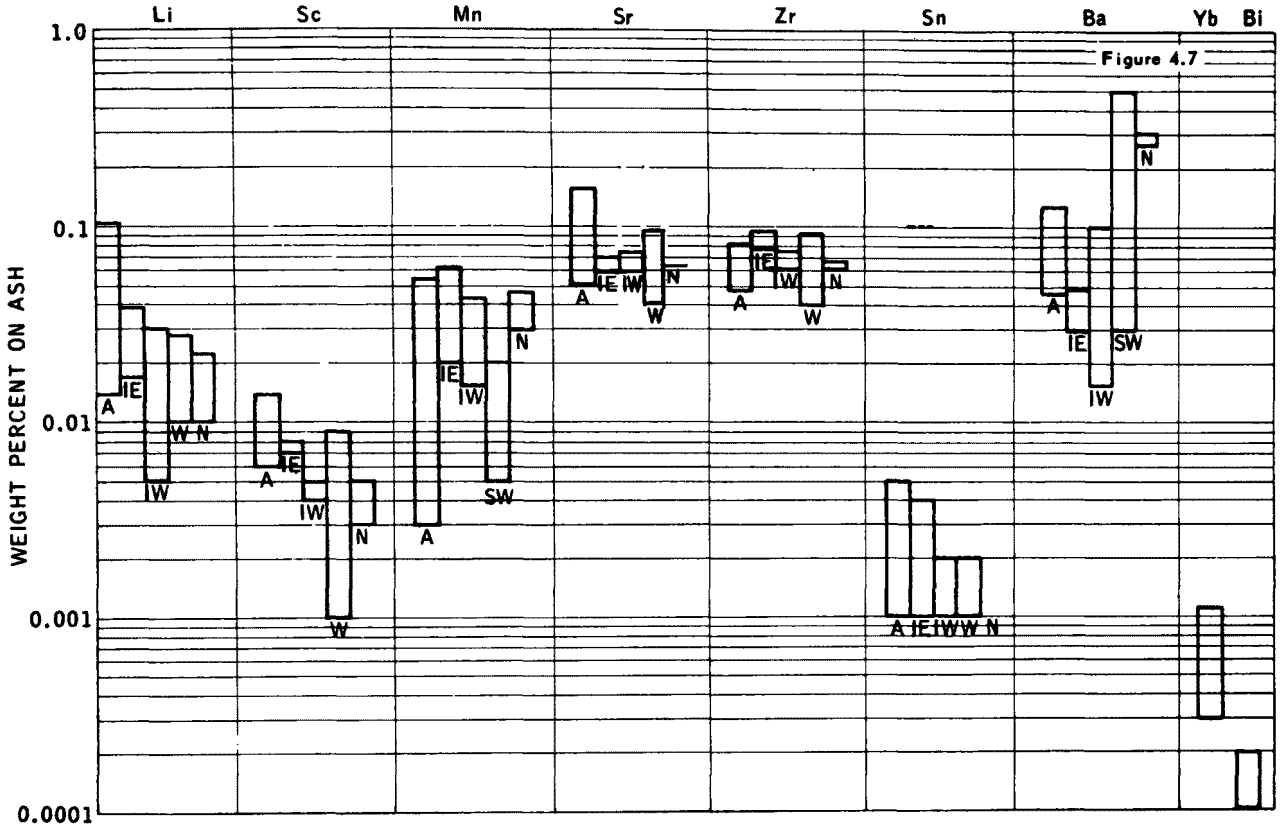

Figure 4 (Cont'd)

Trace Elements in U.S. Coals

The following are correlations indicated by the data obtained in this study:

1. Sulfur in coals appears in moderate amounts in the Appalachian region, higher in the Interior region (East and West), and less in all the Western coals.

2. Trace element concentration as a whole correlates only moderately with geographical location, and not at all with coal rank. Boron, which is high in lignites and lower in high rank coals, is an exception.

3. The amount of some trace elements is commonly highest in the top and bottom few inches of a bed, and at the edges of a coal basin (Ge, Be, Ga, and B at bottom only). These variations are frequently greater than the differences between the averages for different beds. Other elements (Cu, Ni, Co) show no such correlation.

4. Different elements tend to be concentrated at different parts of the bed or basin, depending on the geochemical processes involved in the formation of the coal.

5. Those elements which tend to be concentrated in coals (S, Ge, Be, B, Ga) are associated primarily with the organic portion of the coal. They also show the largest variance in average concentrations between different major producing areas: e.g., for germanium, which is high in Illinois.

6. The usual amount of some 20 trace elements present is about 5-10 ppm, in the range 1-50 ppm. B and F are higher, about 10-200 ppm, and Hg is lower, about 0.01-0.5 ppm.

7. Most trace elements are present in concentrations which fall within a narrow range, varying by a factor of 3 or less in the averages for different basins or areas. This range is close to their average crustal abundance, which usually lies between the concentration of the element in coal and its concentration in ash. Boron and germanium in coal are high compared to crustal abundance, and only a few elements such as manganese are low.

8. The selection of a completely "non-polluting" coal is not possible, in the general case. For a given amount of ash, coals which are low in any one group of elements must be correspondingly high in others. The definition of non-polluting depends directly on the decision as to which elements are of concern, and which are not.

9. Trace element variations between coals in different areas often reflect differences in the source rocks which contributed the elements to the coal-forming swamps, and the distance of the source rocks from the swamp. In certain areas, e.g., the Illinois basin, this shows an instructive geographical pattern.

10. Surface outcrops or samples weathered otherwise by exposure may not be indicative of trace element concentrations in the coal at depth. Surface oxidation creates active sites on the coal, with which minor elements in flowing water can selectively react.

11. The elements present in largest amount, as minor components of the coal rather than as traces only, are the common constitutents of surface waters and rocks: silicon, aluminum, iron, sulfur, phosphorus, sodium, potassium, calcium, and magnesium. These are present throughout the coal but they are often enriched in the top layer, where they have apparently been leached out of enclosing sediments.

12. Anomalous amounts of specific elements may be found in beds contiguous to mineral ore bodies of the same element. This is regularly the case for coals having a mercury, lead, zinc or uranium content higher than the usual range, and may be equally true for other elements including copper, tin and arsenic.

6.2.2 Trace Elements in Coal Feed to Processes in this Study

The trace elements in coals assumed as feeds for the various processes were given in each process report when information was available. Generalizations concerning trace elements in feeds are not possible; each prospective coal must be examined individually to determine what trace elements of interest are present and to what degree they will affect pollution control. Figure 4 is an indication of the ranges that must be considered.

6.2.3 Fate of Trace Elements in Coal

Although there is considerable information available, as indicated in Section 6.2.2, on the trace element composition of coals, much less is known concerning the fate of these elements during gasification and liquefaction. What goes into the plant must reappear somewhere. Thus, if 20,000 tons per day of coal is used as feed and this coal contains 1 wppm of a trace element, then 40 pounds per day of that element must appear in streams in the plant.

The fate of trace elements during combustion was determined in a study of both experimental and industrial furnaces (45). Some 85-90% of the mercury in coal leaves in the flue gas, and is not retained in the ash. Neither is it removed with the fly ash in an electrostatic precipitator. A large portion of the cadmium and lead are also vaporized during the combustion process, but the indications are that these will be retained with the fly ash and can be separated, for example, by an electrostatic precipitator on the stack gas. This work also shows that some elements appear in higher concentrations in the high density fractions of coal, so that coal cleaning may be effective in some cases for control.

Mass balances were made for 34 elements on a coal fired power station (46). More than 80% of the mercury and much of the selenium leave as a vapor. The electrostatic precipitator was about 98% efficient for removing fly ash and the elements associated with it. Other studies on furnaces have been described in references 47-49.

One study has been made on the trace element content of coal solids after various stages of treatment (50). The results are shown in Table 57. A very recent attempt has been made to make a material balance on trace elements in coal gasification (51). The recovery was variable, ranging from 17 to over 100 percent. Some information is available on the trace element content of liquid products from the SRC process (42).

It is obvious that all materials entering the plant must also leave via the effluent or product streams. Many of the trace elements volatilize to a small or large extent during processing, and many of the volatile components can be highly toxic. This is especially true for mercury, selenium, arsenic, molybdenum, lead, cadmium, beryllium, and fluorine.

The fate of trace elements in coal conversion operations such as liquefaction or gasification can be very different than experienced in conventional coal fired furnaces. One reason is that the conversion operations take place in a reducing atmosphere, whereas in combustion the conditions are always oxidizing. This maintains the trace elements in an oxidized condition such that they may have more tendency to combine or dissolve in the major ash components such as silica and alumina. Furthermore, the reducing atmosphere present in coal conversion may form compounds such as hydrides, carbonyls, or sulfides which may be more volatile.

Consideration must also be given to trace metals that are not volatilized and leave in the solid effluents from the plant, one of which is the slag or ash from the coal fired furnace and from gasification. Undesirable elements might be leached out of this slag since it is handled as a water slurry or will ultimately be exposed to leaching by ground water when it is disposed of as land fill or to the mine. Sufficient information is not now available to evaluate the potential problems and the situation on gasifiers may be quite different from the slag rejected from coal fired furnaces since it is produced in a reducing rather than an oxidizing atmosphere. Background information on slag from blast furnaces used in the steel industry may be pertinent from this standpoint, since the blast furnace operates with a reducing atmosphere. However, a large amount of limestone is also added to the blast furnace, consequently the nature of the slag will be different.

Other possible sources of trace element emissions from the plant need to be evaluated. Thus, additives such as chromates may be used in the cooling water circuit and appear in the blowdown stream. Depending upon the amount present and the particular plant location, it may be desirable to provide for chromium removal, for example using lime precipitation. Similarly, trace elements may be present in chemical purge streams such as from acid gas removal systems where arsenates etc. may be used as additives, or from absorption/oxidation sulfur plants using catalysts such as vanadates.

Table 57

Trace Element Concentration Of Pittsburgh No. 8 Bituminous Coal At Various Stages Of Gasification

Calculated on the Raw Coal Basis (From Ref. 50)

	Feed Coal	After Pretreat	After Hydro-Gasifier	After Electro Thermal Gasifier	% Overall Loss for Element
Max. Temp. of Treat, °C	-	430	650	1000	
Element:	ppm				
Hg	0.27	0.19	0.06	0.01	96
Se	1.7	1.0	0.65	0.44	74
As	9.6	7.5	5.1	3.4	65
Te	0.11	0.07	0.05	0.04	64
Pb	5.9	4.4	3.3	2.2	63
Cd	0.78	0.59	0.41	0.30	62
Sb	0.15	0.13	0.12	0.10	33
V	33	36	30	23	30
Ni	12	11	10	9.1	24
Be	0.92	1.0	0.94	0.75	18
Cr	15	17	16	15	0

It can be concluded that, until more information is available as to what streams trace elements appear in, what form they are in, and in what quantities they appear, little can be decided on how to prevent their movement into the environment or even whether or not they present a problem if they do.

6.3 Trace Elements in Petroleum and Shale

A major survey was made to determine the trace elements in petroleum and shale. The results of this survey were reported in detail in reference 1 but are summarized in Appendix D for information purposes. Correlations found in the data and new data required are indicated below.

6.3.1 Correlations Indicated

Correlations indicated and conclusions drawn from the data and information presented herein are given below.

1. The sulfur and nitrogen levels of crudes consumed in the U.S. are well characterized while the levels for other trace elements are not.

2. Vanadium and nickel analyses are qualitatively correct but different methods of analysis produce somewhat different results. Values for other trace elements are more questionable.

3. Part (or even all) of the quantity reported for certain elements present in trace concentrations in a sample may have been introduced inadvertently by well piping, transportation systems, preparation of the sample for analysis, etc.

4. Analytical data on elements contained in crudes as suspended material or dissolved in associated water cannot have the same impact as data obtained from elements present as an intimate part of the organic matrix.

5. Samples must be completely identified as to their origin if data are to be meaningful.

6. Correlations have been developed between crude oil trace element concentrations and the geological occurrence of the oil. This is especially true for sulfur. These correlations may aid in locating crudes possessing low concentrations of trace elements.

7. The increasing demand for crude oil by the U.S. coupled with declining domestic production means that the developing crude oil gap will be met by imports.

8. Imports of crude from the Middle East can be expected to increase substantially. Imports from Canada and Venezuela already at high levels will change proportionaly less.

9. Crude from the Middle East is of lower quality than much of U.S. production. The consumption of increasing quantities of Middle Eastern crude will decrease the overall quality of crudes processed in the U.S. This can require additional refining complexity in those refineries processing these crudes.

10. Trace element data are factors which contribute towards the establishment of a price for a given crude.

6.3.2 New Data Required

Based upon these conclusions it is apparent that a number of unmet needs exist related to crude oil trace element data. These unmet needs are listed below.

1. Far more extensive data are required for potentially hazardous elements present in trace concentrations in crude oil. This information should be obtained first on those crudes consumed in the greatest amounts in the U.S. Data from oil fields which can be expected to contribute to U.S. needs in the future (such as underdeveloped fields in the Middle East) would also be of value.

2. Referee methods must be developed in order to determine those trace elements that cannot be analyzed reliably at present. Several programs are underway to accomplish this. The methods developed should be widely promulgated as a first step in making crude oil trace element data more widely available.

3. It must be determined at which point a sample of oil should be obtained if the elemental analysis is to yield the maximum amount of information. In addition, it must be determined if it is desirable to remove extraneously introduced matter such as water and suspended particulates.

4. Further correlations should be developed between trace element data and geological information to aid in the search for high quality crude oils, i.e., those crudes possessing low levels of significant trace elements.

6.4 Trace Compounds Formed in Coal Conversion

In addition to the trace elements originally present in coal, it is also necessary to be concerned with the trace materials formed during processing. Some idea of the broad spectrum of chemicals produced in coal conversion is indicated in reference 52. Components in the gasifier gas, analyses of benzene-soluble tar, and by-product water analyses are shown in Tables 58, 59 and 60.

Table 58

Components In Gasifier Gas (From Ref. 52)
(ppm)

	Pittsburgh Seam Coal	Illinois No. 6 Coal
H_2S	860	9,800
COS	11	150
Thiophene	42	31
Methyl Thiophene	7	10
Dimethyl Thiophene	6	10
Benzene	1,050	340
Toluene	185	94
C_8 Aromatics	27	24
SO_2	10	10
CS_2	--	10
Methyl Mercaptan	8	60

Table 59

Mass Spectrometric Analyses Of
Benzene-Soluble Tar
From Synthane Gasification (Ref. No. 52)
(Vol. %)

Structural type; includes alkyl derivates	HP-118[a] #118 Pittsburg	HP-1[a] #92 Illinois
Benzenes	1.9	2.1
Indenes	6.1[b]	8.6[b]
Indanes	2.1	1.9
Napthalenes	16.5	11.6
Fluorenes	10.7	9.6
Acenaphthenes	15.8	13.5
3-ring aromatics	14.8	13.8
Phenylnaphthalenes	7.6	9.8
4-ring peri-condensed	7.6	7.2
4-ring cata-condensed	4.1	4.0
Phenols	3.0	2.8
Naphthols	b/	b/
Indanols	0.7	0.9
Acenaphthenols	2.0	--
Phenanthrols	--	2.7
Dibenzofurans	4.7	6.3
Dibenzothiophenes	2.4	3.5
Benzonaphthothiophenes	--	1.7
N-heterocyclics[c]	(8.8)	(10.8)
Average mol. wt.	202	212

a/ Spectra indicate traces of 5-ring aromatics.
b/ Includes any naphthol present (not resolved in these spectra).
c/ Data on N-free basis since isotope corrections were estimated.

Table 60

By-Product Water Analysis[1/] From Synthane Gas (Ref. No. 52)

	Pittsburgh Seam	Illinois No. 6	Coke Plant
pH	9.3	8.6	9
Suspended Solids	23	600	50
Phenol	1,700	2,600	2,000
COD	19,000	15,000	7,000
Thiocyanate	188	152	1,000
Cyanide	0.6	0.6	100
NH_3	11,000	8,100[2/]	5,000
Chloride		500	
Carbonate		6,000[3/]	
Bicarbonate		11,000[3/]	
Total S		1,400[4/]	

1/ Mg/liter (except pH)
2/ 85% free NH_3
3/ Not from same analysis
4/ $S^{=}$ 400

$SO_3^{=}$ 300

$SO_4^{=}$ 1,400

$S_2O_3^{=}$ 1,000

Compounds formed in coal conversion may cause environmental problems, but, unfortunately, little information is available as to the concentration of such materials in plant effluents. As a first step in obtaining the necessary information, an analytical test plan was constructed to guide in obtaining the necessary data. This plan is described in the next section.

6.5 Data Acquisition

No systematic study of a coal gasification or liquefaction plant is available that shows the fate of trace elements and trace organic compounds. It is impossible to estimate the concentrations of these materials and therefore sampling of the necessary streams with subsequent analysis of the samples is necessary to determine what controls are necessary. As part of the present program, an Analytical Test Plan (ATP) was devised for obtaining the needed information (53). This ATP is summarized here and for more information, the reader is referred to the original report.

6.5.1 Analyses to be Made

In selecting the possible pollutants for analysis in the selected plant streams, five factors were considered. These were: 1) the potential impact of the pollutant on the environment, 2) available data regarding the composition of commercial coal gasification and liquefaction plant streams, 3) the minor and trace constituents of coals, 4) various process considerations, and 5) lists supplied by the EPA of materials which are considered potential environmental hazards.

On the basis of this literature, the materials listed in Table 61 were selected for analysis. In addition to these materials other analyses were deemed desirable to include in the test plan because some environmental insight might be gained of the process in general; these analyses are listed in Table 62.

6.5.2 Analytical Techniques

The types of samples were classified as: 1) aqueous samples, 2) coal and coal-related solid samples, 3) gas and ambient air samples, and 4) coal liquid samples. Metals were discussed separately. Methods were referenced and discussed for analysis of each material contained in the sample classes. Techniques were given for sampling streams falling into the various classes. Sample preservation was indicated, where needed.

6.5.3 Coal Conversion Streams to be Sampled

Figure 5 shows the block flow diagram of the model gasification plant used in preparing the ATP. Table 63 lists those streams that should be sampled and analyzed. The ATP gives the methods for sampling and analyzing these streams. Successful analysis of these streams will give the disposition of the pollutants in gasification, but errors may occur due to faulty sampling, interfering substances, or others. It may then be necessary to analyze other streams to check the first analyses. If this is the case, it will be advisable to analyze the streams indicated below.

Table 61

Possible Pollutants From Coal Processing

Metals	Gases	Polynuclear Aromatics
As	AsH_3	Benzo(k)fluoranthene
Ba	H_2Se	Benzo(b)fluoranthene
Be	Fe, Co and Ni Carbonyls	Benzo(a)pyrene
Ca	SO_2/SO_3	Benzo(e)pyrene
Cd	NO_x	Perylene
Cr	COS	Benzo(ghi)perylene
Fe	H_2S	Coronene
Hg	CH_3SH	Chrysene
Li	NH_3	Fluoranthene
Mn	H_2	Pyrene
Na	CO	Benzo(ghi)fluoranthene
Ni	CO_2	Benz(a)anthracene
Pb	CH_4	Triphenylene
Sb		Benzo(j)fluoranthene
Se		
V		

Other Organic Materials

Thiophene
CS_2
phenols
benzene
toluene
xylene
oil
acids
aldehydes

Inorganic Ions		Particulates
CN^-	Cl^-	
SCN^-	Phosphates	
F^-		
$S^=$		
$CO_3^=$		

Table 62

Other Analyses

Coal Analysis

Moisture
Ash
Volatile Matter
Fixed C
S
O
C
H
N
Calorific Value
Fusibility of Ash

Water Quality Indicators

Specific Conductance
pH
COD
BOD
TOC
Residue
Dissolved Oxygen
Suspended solids
Dissolved solids
Turbidity
Color
Oils

Figure 5

Lurgi Gasification

Patterned After El Paso Burnham Complex

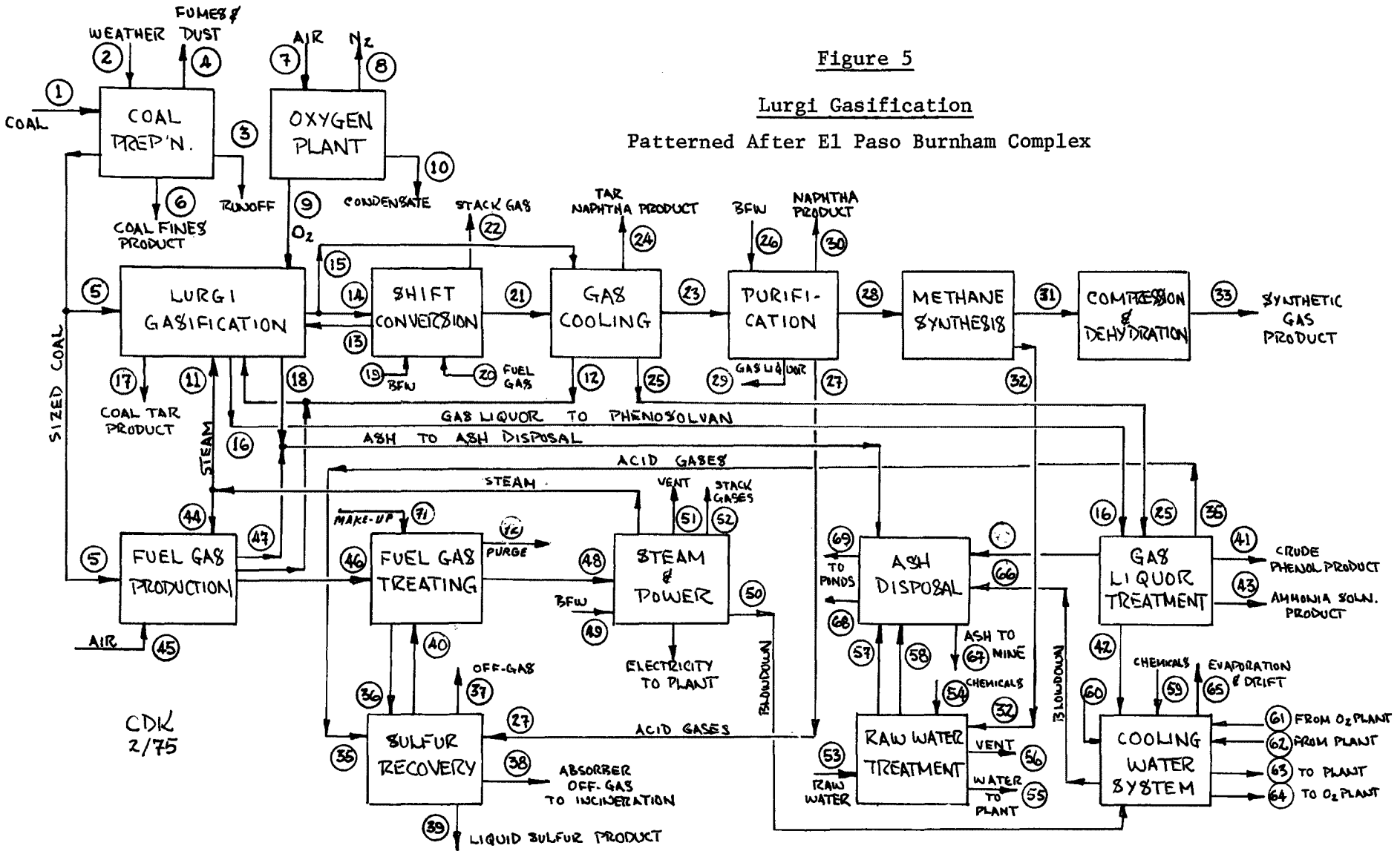

CDK
2/75

Table 63

Summary Of Effluent Streams To Be Analyzed

Coal Gasification

Lurgi Process Model

Stream No.	Stream Name	Analysis For
4	Dust and Fumes in Coal Preparation Area	Atmosphere in enclosed spaces, discrete stack emissions from enclosed spaces and from dust collection equipment, and atmosphere in vicinity of coal piles, open conveying and handling equipment, and coal fines collection system to be analyzed for particulates.
5	Sized Coal to Gasifiers and to Fuel Production	Complete coal analysis including trace elements.
17	Coal Tar Product*	Trace Sulfur Compounds Trace Elements
22	Shift Startup Heater Stack Gas	Stack Gas Analysis Trace Sulfur Compounds Particulates
24	Tar-Oil-Naphtha Product*	Sulfur Trace Elements
30	Naphtha Product*	Sulfur Trace Elements

Table 63 (Cont'd)

Summary Of Effluent Streams To Be Analyzed

Coal Gasification

Lurgi Process Model

Stream No.	Stream Name	Analysis For
33	Synthetic Gas Product	Trace Sulfur Compounds Metal Carbonyls
37 38	Absorber and Oxidizer Off-Gases and Incinerator Stack Gases	Trace Sulfur Compounds Particulates (V, Ni, Na, etc.)
39	Liquid Sulfur Product*	Trace Elements
41	Crude Phenol Product*	Total Sulfur Trace Elements
43	Aqueous Ammonia Solution Product*	Trace Sulfur Compounds Trace Elements
51	Deaerator Vent Gases	Particulates
52	Boiler Stacks and Heaters (multiple stacks are involved, including heaters in shift conversion and gas compression areas	Stack Gas Analysis Trace Sulfur Compounds Particulates
53	Raw Water to Process	Complete Water Analysis
56	Degasser Vent Gases	Trace Sulfur Compounds Hydrocarbons

Table 63 (Con'd)

Summary Of Effluent Streams To Be Analyzed

Coal Gasification

Lurgi Process Model

Stream No.	Stream Name	Analysis For
65	Evaporation and Drift from Cooling Towers	Atmosphere in vicinity of cooling towers to be sampled for: Trace Sulfur Compounds Trace Elements Hydrocarbons and PNA
67	Wet Ash to Mine	Complete coal solids analysis and complete water analysis.
68	Ash Water Effluent to Evaporation Ponds*	As for Stream 67
69	Wet Fine Ash Slurry to Evaporation Ponds*	As for Stream 67

* Atmosphere over all evaporation and holding ponds and vicinity of all storage tankage to be sampled and analyzed for hydrocarbons and trace sulfur compounds.

- Coal Preparation

Streams 2 and 3; it would be appropriate to determine the concentration of organic and inorganic materials in the run-off from the coal area as a function of the quantity of rainfall.

- Gas Cooling

Streams 15, 21; into gas cooling and streams 12, 23, and 25 from gas cooling would have to be analyzed to check the analysis of stream 24.

- Gas Purification

Streams 23 and 26 into gas purification and streams 27, 28, and 29 from the purification must be analyzed to check stream 30.

- Sulfur Recovery

In order to check streams 37, 38, and 39 it will be necessary to analyze streams 27, 35, and 36 into the low-pressure Stretford unit and stream 40 out of the unit.

- Fuel Gas Treating

It would be wise to analyze stream 72 (solution purge) from the high-pressure Stretford unit. How this is done is difficult to predict as this purge may be continuous, intermittent, or in some cases, none at all.

- Cooling Water System

This is one of the most critical units for overall material balance. Good sampling of evaporation and drift losses are difficult and other factors may make the cooling towers research projects in themselves. To get a material balance, it may be necessary to analyze streams 42, 59, 60, 61, and 62 into the system and streams 63, 64, and 66 out of the system. Even this may not be sufficient as trace pollutants can be trapped in slime in the towers. This also may have to be analyzed and its quantity estimated. Whether or not these analyses will check the analysis of stream 65 is uncertain due to the sampling problems mentioned above.

- Ash Disposal

The streams into ash disposal should probably be analyzed and compared with effluent streams 67, 68, and 69 to be sure no air pollutants are escaping. This would entail analyses of streams 18, 39, 47, 57, 58, and 66.

All of the above would require 28 to 29 more streams to be analyzed than the 20 indicated in Table 63. If satisfactory results were not obtained, then it may be necessary to analyze all 72 streams of Figure 5.

A block flow diagram of the COED process is shown in Figure 6. This process was used as a model for liquefaction. Streams to be sampled and analyzed are given in Table 64. If it is necessary to check the analyses for each unit, then it will be necessary to analyze the additional streams listed below.

Coal Preparation - Streams 2 and 4.

Stages 2,3,4 Pyrolysis - Streams 13, 14, 15, 16, 17, 18, 19 21, 22, and 39.

Oil Filtration - Streams 25, 27, 28, 29, 30, and 31.

Hydrotreating - Streams 30, 32, 33, 34, 36, 37, and 39.

Sulfur Recovery - 45 and 51, 53 and 54.

Power and Steam Generation - 20, 46, 58, 59, 60, and 64.

Cooling Water - Streams 68, 71, 72, 73, and 75.

The above would require 37 to 38 more streams to be analyzed than the 23 listed in Table 64.

6.6 Analysis of Streams from Commercial and Development Scale Gasification Plants

The tables in this section are provided as an indication of the limits of information available and to provide a frame of reference for the magnitude of the concentrations of the various streams. These data were obtained from trips to commercial coal plants and from the literature. The stream numbers in the tables refer to stream numbers of Figure 5.

Table 65 gives analyses of the feed coals as well as pertinent information on other coals. Table 66 presents analyses of materials in ash disposal. Table 67 contains information on liquor streams from various plants while Table 68 shows what information is available on streams in gas purification. Table 69 gives analyses on organic hydrocarbon by-products.

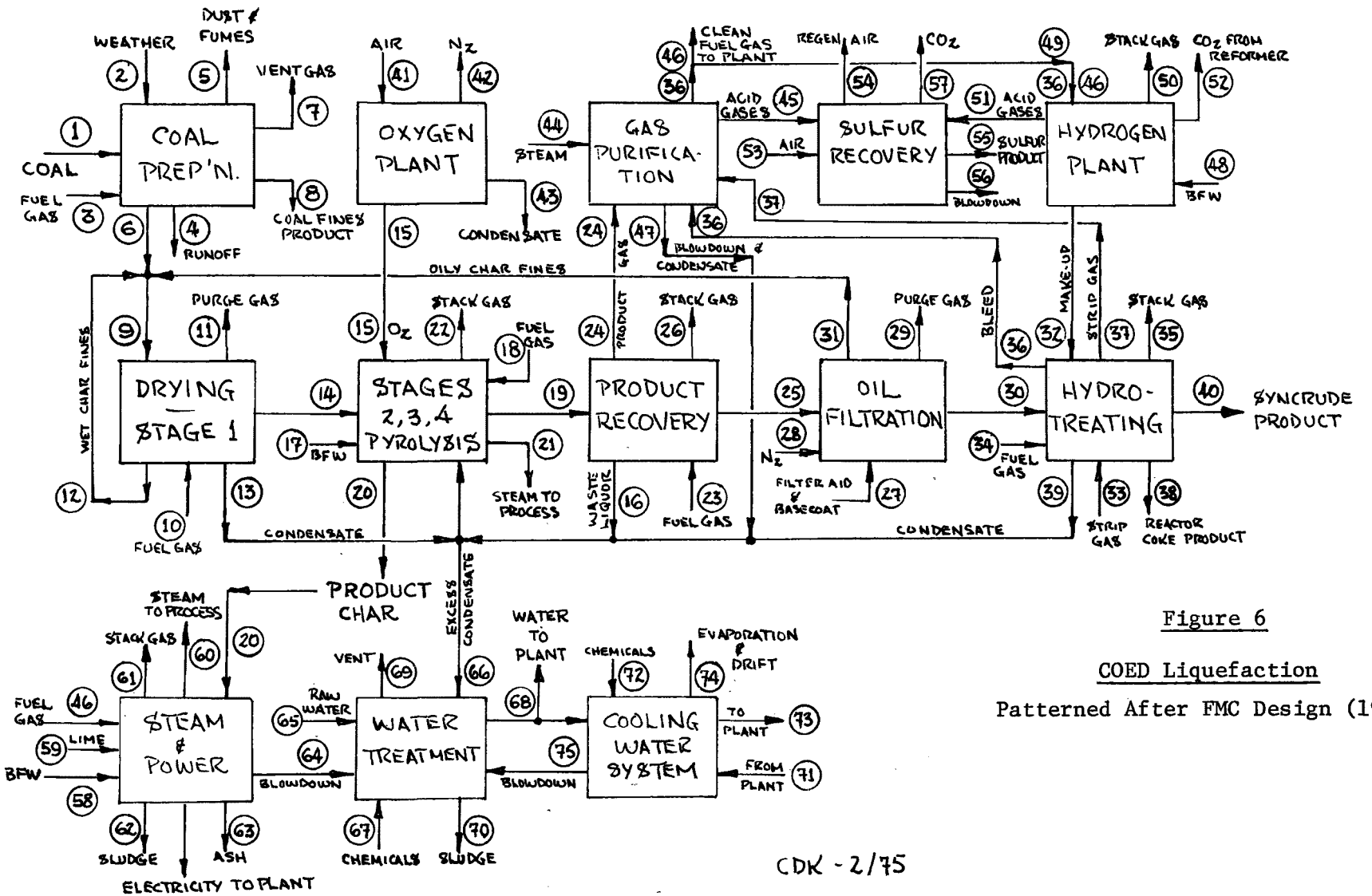

Figure 6

COED Liquefaction

Patterned After FMC Design (1974)

CDK - 2/75

Table 64

Summary Of Effluent Streams To Be Analyzed

Coal Liquefaction

COED Process Model

Stream No.	Stream Name	Analysis For
5	Dust and Fumes in Coal Preparation	Atmosphere in enclosed spaces, discrete stack emissions from enclosed spaces and from dust collection equipment, and atmosphere in vicinity of coal piles, open conveying and handling equipment, and coal fines collection system to be analyzed for particulates.
6	Sized Coal to Pyrolysis	Complete coal analysis including trace elements.
7	Coal Dryer Vent Gas	Stack Gas Analysis Trace Sulfur Compounds Particulates
11	Purge Gas from Stage 1 Pyrolysis	Stack Gas Analysis Trace Sulfur Compounds Particulates
20	Product Char	Complete Coal Analysis Including Trace Elements
22	Stack Gas from Superheaters	Stack Gas Analysis Trace Sulfur Compounds Particulates

Table 64 (Con'd)

Summary Of Effluent Streams To Be Analyzed

Coal Liquefaction

COED Process Model

Stream No.	Stream Name	Analysis For
26	Stack Gas from Transport Gas Heater	Stack Gas Analysis Trace Sulfur Compounds Particulates
35	Stack Gas from Preheater	Stack Gas Analysis Trace Sulfur Compounds Particulates
38	Hydrotreating Reactor Coke Product	Complete Coal Analysis Including Trace Elements
40	Syncrude Product	Sulfur Trace Elements
47	Benfield Blowdown	Complete coal solids analysis and complete water analysis.
50	Stack Gas from Hydrogen Plant Heaters	Stack Gas Analysis Trace Sulfur Compounds Particulates
52	Separated CO_2 from Steam Reforming	Stack Gas Analysis Trace Sulfur Compounds Particulates
55	Sulfur Product	Trace Elements

Table 64 (Con'd)

Summary Of Effluent Streams To Be Analyzed

Coal Liquefaction

COED Process Model

Stream No.	Stream Name	Analysis For
56	Stretford Blowdown	Complete coal solids analysis and complete water analysis.
57	Sulfur Plant Off Gas	Trace Sulfur Compounds Particulates (V, Ni, Na, etc.)
61	Boiler Stacks and Heaters (Multiple Stacks are Involved)	Stack Gas Analysis Trace Sulfur Compounds Particulates
62	Lime Sludge from Flue-Gas Treatment	Complete coal solids analysis and complete water analysis
63	Char Ash from Boilers	Complete coal solids analysis and complete water analysis.
65	Raw Water to Process	Complete Water Analysis
69	Degasser Vent Gases	Trace Sulfur Compounds Hydrocarbons
70	Sludges from Water Treatment	Complete coal solids analysis and complete water analysis.
74	Evaporation and Drift from Cooling Towers	Atmosphere in vicinity of cooling towers to be sampled for: Trace Sulfur Compounds Trace Elements Hydrocarbons and PNA

Table 65

Analyses of Streams in Gasification

(ppm, unless noted otherwise)

Unit Stream No. and Identification	Coal Storage and Preparation 2 and 5 ROM Coal and Feed Coal					Coal* Pretreatment 5a - Coal After Pretreatment	Hydrogasifier* 5b - Coal After Hydrotreating
Stream Material	U.S. Coals From Ref. 1	Navajo Coal From Ref. 21	Illinois No. 6 From Ref. 42	Pittsburgh No. 8 From Ref. 50	Sasol Plant From Ref. 57	Pittsburgh No. 8 From Ref. 50	Pittsburgh No. 8 From Ref. 50
Aluminum	--	--	12,000	--	--	--	--
Antimony	--	0.3-1.2	<4-10.6	0.15	<0.05-<0.5	0.13	0.12
Arsenic	3-60	0.1-3	19	9.6	2-5	7.5	5.1
Barium	--	--	50	--	--	--	--
Beryllium	0.08-11	--	<10	0.92	2-3	1.0	0.94
Bismuth	--	0-0.2	<5	--	--	--	--
Boron	2.7-370	60-150	200	--	100	--	--
Bromine	--	0.4-18	7.2	--	1	--	--
Cadmium	--	0.2-0.4	1.5-<33	0.78	<0.05-<0.1	0.59	0.41
Calcium	--	--	3400-4800	--	--	--	--
Cerium	--	--	--	--	150-200	--	--
Chlorine	--	--	--	--	70	--	--
Cobalt	0.4-20	--	<10-17	--	--	--	--
Copper	1-50	--	31-78	--	--	--	--
Chromium	2.7-20	--	--	15	--	17	16
Fluorine	10-100	200-780	300	--	100	--	--
Gallium	0.4-20	0.5-8	--	--	--	--	--
Germanium	0.4-50	0.06-0.5	<10	--	--	--	--
Gold	--	--	<10	--	--	--	--
Iron	--	--	20,000-24,000	--	--	--	--
Lanthanium	<1-90	--	--	--	--	--	--
Lead	4-33	1.4-4	8-<10	5.9	10-20	4.4	3.3
Lithium	--	--	7.4	--	--	--	--
Magnesium	--	--	550-890	--	--	--	--
Manganese	--	--	39-75	--	500	--	--
Mercury	0.01-1.2	0.2-0.35	0.05	0.27	<0.1	0.19	0.06
Molydenum	0.1-41	--	49	--	--	--	--
Niobium	--	--	<44	--	--	--	--
Nickel	1-50	3-30	29-120	12	30-50	11	10

---

* Not from Figure 5

Table 65 (Continued)

Analyses of Streams in Gasification

Unit Stream No. and Identification	Coal Storage and Preparation 2 and 5 ROM Coal and Feed Coal					Coal* Pretreatment 5a - Coal After Pretreatment	Hydrogasifier* 5b - Coal After Hydrotreating
Stream Material	U.S. Coals From Ref. 1	Navajo Coal From Ref. 21	Illinois No. 6 From Ref. 42	Pittsburgh No. 8 From Ref. 50	Sasol Plant From Ref. 57	Pittsburgh No. 8 From Ref. 50	Pittsburgh No. 8 From Ref. 50
Potassium	--	--	1,300-1,790	--	--	--	--
Samarium	--	--	1.9	--	--	--	--
Selenium	0.5-4.0	0.08-0.21	7	1.7	--	1.0	0.65
Silicon	--	--	18,000	--	--	--	--
Silver	--	--	0.8	--	--	--	--
Sodium	--	--	166-320	--	--	--	--
Strontium	--	--	<20	--	--	--	--
Sulfur	--	--	--	--	--	--	--
Tantalum	--	--	<50	--	--	--	--
Tellurium	--	--	5.8	0.11	--	0.07	0.05
Thorium	--	--	<20	--	--	--	--
Tin	--	--	40-104	--	--	--	--
Titanium	--	--	460-600	--	--	--	--
Tungsten	--	--	<30	--	--	--	--
Uranium	10-600	--	<100	--	--	--	--
Vanadium	2.3-190	--	200	33	300-500	36	30
Ytterbium	--	--	0.51	--	--	--	--
Yttrium	1-50	--	--	--	--	--	--
Zinc	<1-600	1.1-27	42	--	--	--	--
Zirconium	--	--	6.3-35	--	--	--	--
Coal Analysis, %							
Moisture	--	16.5	2.7 after drying	--	8	--	--
Fixed C	--	--	51.70	--	--	--	--
Volatile Matter	--	--	38.47	--	--	--	--
Ash	--	17.3	7.13	--	31.6 Dry	--	--
C	--	76.72 MAF	70.75	--	52.4 Dry	--	--
H	--	5.71 MAF	4.69	--	2.6 Dry	--	--
N	--	1.37 MAF	1.07	--	1.2 Dry	--	--
S	--	0.95 MAF	3.38	--	0.43 Dry	--	--
O	--	15.21 MAF	10.28	--	11.7 Dry	--	--
Heating Value, Btu/lb		7,500-10,250	12,821	--	8,890	--	--
Gross Streams, lb/hr							
Solid	--	2,162,135	1,041,667	--	560,000	--	--

---

* Not from Figure 5

Table 66

Analyses of Streams in Gasification Plants: Ash Disposal

Unit Stream No. Identification	Ash Disposal 18 Dry Ash, %		
	From Westfield After Quench From Ref. 56	From Sasol From Ref. 57	From Azot Sanayii From Ref. 58
Stream Materials			
SiO_2	54.60	52	42-65
Al_2O_3	32.66	28	16-19
Fe_2O_3	4.71	5	13-15
CaO	3.58	7	6-10
C	--	3	--
MgO	1.28	1.7	5-7
K_2O	--	0.5	1-3
Na_2O	--	0.7	0.3-1.0
SO_4	--	0.2	(SO_3)5-6
PO_4	--	0.3	--
TiO_2	--	--	0.2-0.8
Trace Elements	--	--	--
Loss on Ignition	2.82	--	--
Cr, Co, Ni, Mn	Trace		

Table 67

Analyses of Streams in Gasification: Gas Liquor

Unit Stream No.	Gas Liquor 16 + 25				Phenosolvan Treated Liquor 39
			Westfield From Ref. 56		
Identification	Sasol From Ref. 57	Synthane From Ref. 55	Tar Liquor	Oil Liquor	Sasol From Ref. 57
Stream Material					
CN^-	6 ppm	0.1-0.6 mg/l	7.8 ppm	2.6 ppm	1 ppm
$Fe(CN)_6$	--	--	4.2 ppm	10.5 ppm	--
SCN^-	--	21-200 mg/l	NIL	41.2 ppm	--
H_2S	--	--	--	--	12 ppm
F^-	--	--	--	--	56 mg/l
$SO_4^=$	--	--	90.6 ppm	74.1 ppm	--
$S^=$	223 ppm	total sulfur: 1,400 mg/l	0.7 ppm	177 ppm	--
S_2O_3	--	--	9.0 ppm	15.8 ppm	--
$CO_3^=$	--	17,000 mg/l	1,128 ppm	17,655 ppm	--
Cl^-	--	35-500 mg/l	4.3 ppm	11.3 ppm	25 ppm
Na^+	53 ppm	--	--	--	--
Phosphates	--	--	--	--	2.5 ppm
Particulates	--	--	--	--	--
Conductivity	--	--	--	--	1,000-1,800 μ Siemens/cm
pH	--	7.9-9.3	9.4	8.0	8.4
Ammonia (free)	10,600 ppm	Total NH_3: 2,500-11,000 mg/l	--	--	--
Ammonia (fixed)	150-200 ppm		Total NH_3 1,795 ppm	Total NH_3 9,597 ppm	215 ppm
COD	--	1,700-38,000 mg/l	--	--	1,126 ppm
BOD	--	--	--	--	--
TOD	--	--	--	--	--
Phenols	3250-4000 ppm	200-6600 mg/l	5,781 ppm	5,047 ppm	Steam Volatile 1 ppm Bound 160 ppm
TDS	--	--	--	--	875 ppm
Fatty Acids	0.03%	--	696 ppm	228 ppm	560 ppm
Suspended Solids	--	23-600 mg/l	100 ppm	340 ppm	21 ppm
Tar + Oil	5000 ppm	--	1,000-5,000 ppm	100-500 ppm	--
Quantity	--	--	--	--	594,000 lb/h

Table 68

Analyses of Streams in Coal Gasification: Gas Purification

Unit Stream No. and Identification	Sasol From Ref. 57					Raw Gas 23 From Synthane From Ref. 55
	23 Raw Gas to Purification	28 Pure Gas From Purification	27 Expansion Gases			
			High Pressure	Low Pressure	Atmospheric Pressure	
Stream Material						
SO_2/SO_3	--	--	--	--	--	1-10 ppm
NO_x	--	--	--	--	--	--
COS	$\angle$10 ppm	--	--	--	--	2-150 ppm
H_2S	3,220 mg/m^3_n	not detected	4,500 mg/m^3_n	7,000 mg/m^3_n	12,600 mg/m^3_n	186-9,800 ppm
Thiophenes	--	--	--	--	--	1.3-55 ppm
CH_3SH	RSH, 20 ppm	total sulfur:	--	--	--	0.1-60 ppm
CS_2	--	0.05 mg/m^3_n	--	--	--	10 ppm
NH_3	--		--	--	--	--
HCN	--	--	--	--	--	20 ppb
H_2	40.05 mol %	57.30 mol %	21.4 mol %	2.6 mol %	0.14 mol %	--
CO	20.20 mol %	28.40 mol %	18.2 mol %	4.8 mol %	0.0 mol %	--
CO_2	28.78 mol %	0.93 mol %	46.7 mol %	83.4 mol %	97.2 mol %	--
Inert	1.59 mol %	1.77 mol %	1.5 mol %	0.8 mol %	0.03 mol %	--
CH_4	8.84 mol %	11.38 mol %	11.4 mol %	7.2 mol %	0.9 mol %	--
C_2+	0.54 mol %	--	0.7 mol %	1.1 mol %	0.7 mol %	--
Flow Rate	381,000 m^3_n/h	263,000 m^3_n/h	4,600 m^3_n/h	15,000 m^3_n/h	98,000 m^3_n/h	--
Btu	--	--	--	--	--	--

---

* m^3_n at 0°C and 760 mm Hg; 1 lb mol = 10.167 m^3_n

Table 69

Analyses of Streams in Coal Gasification:
Organic Liquid By-Products

(ppm unless otherwise indicated)

Unit	Coal Gasification and Gas Liquor Separation						
	Coal Tar to Storage			Oil From Gas Cooling		Naphtha From Gas Purification	
Stream No.	17			24		30	
Identification	Benzene Soluble Tar From Ref. 55	Westfield From Ref. 56	Sasol From Ref. 57	Westfield From Ref. 56	Sasol From Ref. 57	Westfield From Ref. 56	Sasol From Ref. 57
Stream Material							
Antimony	--	--	0.8-1.0	--	0.5-0.6	--	--
Arsenic	0.7	--	3.1-5.0	--	23-30	--	--
Beryllium	--	--	0.6-1.0	--	<0.6	--	--
Boron	--	--	50	--	0.5-0.6	--	--
Bromine	--	--	<0.3	--	Not Detected	--	--
Cadmium	--	--	<0.03-<0.05	--	<0.3	--	--
Cerium	--	--	<0.3-5.0	--	<0.3	--	--
Chlorine	--	--	1.6-10	--	0.5-1.2	--	--
Fluorine	--	--	<0.5-5.0	--	<0.6	--	--
Lead	--	--	50	--	0.5-1.2	--	--
Manganese	--	--	1.6-4.1	--	0.2-0.3	--	--
Mercury	--	--	0.3-0.5	--	<0.1-0.15	--	--
Nickel	--	--	1.6-4.1	--	1-1.4	--	--
Sulfur	0.5-2.7 wt.% of tar	0.77%	0.3 wt.%	0.29%	0.25 wt.%	0.078%	0.34 wt.%
Vanadium	--	--	1.8-8.2	--	0.1-0.3	--	--
Polynuclear Aromatics	Percent of benzene soluble tar						
	Indenes, 1.5-8.6	--	--	--	--	--	--
	Indans 1.9-4.9	--	--	Naphthalene, 7.6%	--	Naphthalene, 1.4%	--
	Naphthalenes 11.6-19.0	--	--	--	--	Indan, 1.43%	--
	Fluorenes 7.2-10.7	--	--	--	--	Indene, 5.37%	--
	Acenaphtenes 11.1-15.8	--	--	--	--	--	--
	3-ring Aromatics 9.0-14.8	--	--	--	--	--	--
	Phenylnaphthylenes 3.5-9.8	--	--	--	--	--	--
	4-ring pericondensed 3.5-7.6	--	--	--	--	--	--
	4-ring catacondensed 1.4-4.1	--	--	--	--	--	--

Table 69 (Cont'd)

Unit	Coal Gasification and Gas Liquor Separation						
	Coal Tar to Storage			Oil From Gas Cooling		Naphtha From Gas Purification	
Stream No.	17			24		30	
Identification	Benzene Soluble Tar From Ref. 55	Westfield From Ref. 56	Sasol From Ref. 57	Westfield From Ref. 56	Sasol From Ref. 57	Westfield From Ref. 56	Sasol From Ref. 57
Stream Material							
Other Organics	Percent of benzene Soluble tar						
Thiophene	Thiophenes 1.0-5.2	--	--	--	--	Other Thiophenes, 1.77%	--
CS_2	--	--	--	--	--	--	--
$(CH_3)_2S$	--	--	--	--	--	--	--
Phenol	Phenols 2.8-13.7	--	--	--	--	--	--
Pyridine Bases	--	--	--	1.3%	--	--	--
Other Phenols	2.7-16.6	--	--	--	--	--	--
Benzene	All benzenes 1.9-4.1	--	--	--	--	19.56%	--
Toluene		--	--	--	--	28.40%	--
Xylene		--	--	--	--	C_8 Aromatics, 15.77%	--
	N-Heterocyclics 3.8-10.8					Other substituted benzenes, 14.5%	
Acids		7.1%	--	16.5%	--		--
	Furans 4.7-9.2					1:2 Benzfuran, 1.09%	
Aldehydes		--	--	--	--		--
%	(Tar analysis Illinois No. 6),%						
Moistures	--	--	--		--		
Fixed C	--	--	--		--		
Volatile Matter	--	--	--		--		
Ash	--	0.16%	--		--		
C	82.5	--	--		--		
H	6.6	--	--		--		
N	1.1	--	--		--		
S	2.8	0.77%	--		--		
O	2.9 (by diff.)	--	--		--		
Heating Value, Btu/lb	--	--	16,000-18,000	--	16,000-18,000	--	16,000-18,000
Gross Streams lb/hr							
Liquid	--	--	902-946	--	2,485-2,552	--	1,937

7. TECHNOLOGY NEEDS

7.1 Trace Elements in Coal

The results of the Phase 1 study on trace elements in coal brought out several gaps in existing data. These are summarized here.

1. Little or no data have been obtained on the content of the hazardous elements F, As, Se, Cd, and Hg in appropriate U.S. coals. This lack has been partially filled for mercury by recent studies, and it is being found in quantities much lower than those commonly quoted in the literature. Results for the other toxic elements noted are spotty at best, and methods for As, Se, and Cd are still in the research stage.

2. Reliable data are needed and not yet available on coals representing large future reserves which are not yet in production, such as those in Wyoming. These data should be on a basis which is directly comparable with the data for other regions. This means that they should either be obtained using the previous standard methods of analysis, or if newer methods are used after sufficient evaluation, correlation must be assured.

3. Changes have been noted in some stored samples on re-analysis by the original standard procedures, so it is not enough to re-examine old samples by a new method. The situation to be particularly avoided is analyzing the new samples only by a new method of analysis, which is not tied in any way into the present bank of basic data.

4. There is a similar need for basic data on the effects of coal conversions on the fate of trace elements, including the effect of operating conditions on the distribution of elements between fly ash (overhead) and bottom ash in combustion, in gasification, and in all other forms of processing. For these studies it is not as important to tie newer methods of analysis to older results. The method must be calibrated well enough within the range of concentrations and interferences concerned to be sure that it gives differential results which are reliable.

5. Major differences exist in the physical and chemical properties of the forms in which potentially pollutant elements are emitted on combustion. This includes such questions as the ionic state of fluorine, the oxidation state of beryllium, the formation of spinels from oxides, and the physical/chemical effects of the surfaces of sub-micron particles. In each of these cases one form may be metabolically active, and another in equal amounts inactive. These effects will

require special attention if the list of toxic hazards is extended to include elements whose presence in minute traces is recognized as essential to health.

7.2 Trace Elements and Other Potential Pollutants in Coal Conversion

The information shown in the tables of Section 6 is an indication of the lack of data regarding trace elements and other low concentration pollutants in the various streams of coal conversion plants. Little information is available for gasification, even though commercial plants exist, and even less information is available for liquefaction plants.

In the area of coal storage there is a need for analyses of rain run-off and ambient air. The water run-off can be expected to approximate mine drainage water but this is not certain. Along these lines, analyses of seepage from coal piles would be of interest. It might be expected that dust from coal piles would have the same trace element concentration as the gross coal, but this is not certain. Due to oxidation, there is the possibility that organic materials are present in small amounts in the air over coal piles. Analysis for these should be explored.

In the area of acid gas removal a knowledge of the traces of product removed would be helpful. Even though the solubility of such materials as carbon monoxide, methane, hydrogen, etc. is small in hot carbonate, amines, etc., a small quantity passes out with the acid gas and special precautions must be taken to prevent the eventual escape of these materials into the atmosphere. A cheap, efficient, high temperature acid gas removal system would be useful in conserving energy. Work is in progress to develop such systems (59-61). A system that would remove the CO_2 in such purity that it could be vented and which did this cheaply would be useful. It is recognized that a liquid that absorbs sulfur compounds and CO_2 to a different degree can produce a CO_2 stream with any designed degree of purity by adding more plates to the column. This, however, can become expensive as the degree of purity increases. The presence of sulfur compounds other than H_2S also adds complications. Other problems arise when there are reactions of impurities with the absorption medium. This results in purges that may be difficult to handle. The magnitude of this problem is difficult to evaluate at present due to lack of information. As more information becomes available, this problem can be considered in more detail. If the sulfur compounds can be removed in sufficient concentrations to use a single stream Claus plant for sulfur recovery, then the problems connected with carbonyl sulfide, organic sulfur, trace hydrocarbons, etc. will be minimized.

From a pollution point of view there is little concern with the shift and methanation sections of gasification, but from an overall environmental viewpoint, the saving in thermal efficiency of producing methane directly from carbon monoxide and water would be desirable.

If no technique is available that cheaply produces a highly concentrated hydrogen sulfide stream, then there is a need for an efficient technique of converting sulfur containing compounds to sulfur. Even a Claus

plant, operating on a concentrated stream of H_2S, produces a tail gas that may require cleanup. A desirable process would convert all sulfur compounds to sulfur, incinerate or recover all hydrogen, carbon monoxide, and hydrocarbons and produce a tail gas that could be vented directly to the atmosphere. It would have no obnoxious liquid or solid effluents and could be built and operated at reasonable costs.

Another area where there are technology needs has to do with waste water treatment. More details are needed as to the trace element and compound composition of waste water streams. Certainly, if water is to be conserved, it is necessary to have a better definition of what is in the water in order to devise techniques for its re-use. A measurement of biological oxygen demand is not sufficient for this. Cleaning the dirty water may not be a simple matter (38).

Of special need are detailed analyses of effluents from waste water treatment facilities treating water from coal conversion facilities. One unknown is the effluent to the air from biological oxidation. The possibility of transfer of water pollutants to the air has been considered (37). A special problem involves cooling tower blowdown. This waste water contains large amounts of dissolved solids and is difficult to treat. Techniques for using this water directly in the process or to make steam would be desirable.

Solids disposal is another general area where more data are needed and better disposal techniques are desirable. The leaching characteristics of ash, slag, flue gas scrubbing materials, incinerated sludges, and others are needed. The rates of leaching and concentration of potentially hazardous materials in the leachate would indicate whether or not a disposal technique was sufficient. One study on leaching of spent oil shale (62) shows considerable leaching of minor elements.

A number of other areas exist for which little if any information is available. One, for example, is the concentration of volatile trace elements in coal dryers. Another is the possible use of chars to remove polluting materials from waste water.

In general, much more information is needed about the composition of streams in coal conversion plants. The only way to obtain this information is by sampling and analyzing these streams. Once it is known what is present, then decisions can be made as to what is needed in the way of control technology. If this technology is not available, then programs can be initiated to develop it.

7.3 Improvements in Thermal Efficiency

To relieve the load on the environment caused by heat losses, a number of areas exist for research to make improvements in thermal efficiency. Table 56 is an indication that no discovery will change the overall thermal efficiency in a major way as the heat losses are so evenly distributed over so many plant areas. Nevertheless, improvements are possible in many areas and research could lead to such improvements.

Oxygen production is a large source of heat loss. Better techniques for oxygen production are possible. One possibility is the thermal decomposition of water by cyclic chemical reactions. This also produces hydrogen that would find wide use in the production of synthetic fuels.

A sulfur insensitive catalyst that would carry out the water gas shift and methanation reactions in one step would make a great contribution to the concept of heat conservation. Gases would then have to be cooled only once in the gasification sequence.

The need for better, more efficient techniques for sulfur removal have been discussed previously. This is an old area of technology, however, and improvements may be difficult without a fresh approach.

The area of water cleanup has also been discussed previously. When more is known of the composition of wastewater streams, there should be many areas of research that would improve thermal efficiency.

Most of the processes studied in this work have relatively large streams containing on the order of 500 million Btu/hr of sensible and latent heat at temperatures of about 300°F. This heat is worth recovering but at present no uses for it are obvious. The temperature level of this heat is greater than that available in some schemes such as energy recovery from temperature gradients in the ocean, but the quantity of heat available at any one site is such that no grand plan comes to mind on how it could be used. This area is worth further thought.

8. TRANSIENT POLLUTANTS

(Section 8 was prepared by C. E. Jahnig and E. M. Magee and has not appeared previously as a process report.)

8.1 General

The discussion in previous sections of this report dealt primarily with effluents released during normal on-stream operation of the processes. In addition there can be very significant emissions of an intermittent nature, for example during startup, upsets, shutdown, maintenance, etc. Such emissions can be classed as transients. In order to make the environmental evaluation of an assessment of coal conversion processes complete, an evaluation of transient pollutants has been made. Results of this study of transients is presented in this section of the report.

A plant sized to produce 250 MM scfd of SNG is commonly used for projected commercial plants, and in the following discussions when reference is made to a large plant it will refer to this size.

Transient emissions have received little attention or study to date, particularly on coal conversion processes. One reason is that they are released intermittently and therefore are difficult or nearly impossible to sample and analyze in order to determine the nature and amount of emission. Occurrences such as failure of the main electrical power supply in a plant can cause a serious upset with many transient emissions and very visible effects, but trying to sample them is not a fruitful way to approach the problem. However, it is important to first define the transient emissions so that they can be evaluated, classified as to relative importance, and practical control measures defined. What is needed is to apply reasonable and achievable controls on transient emissions and this will probably require a different approach than has been used for normal or primary emissions.

The purpose of this study is to examine potential transient emissions from coal conversion processes in order to determine the nature and amount of each such emission, to give perspective on the relative environmental concern for each emission, and to discuss and evaluate control methods.

A preferred approach is to eliminate the problem by suitable disposal of the stream (e.g., by returning it to the process, as might be done with vent gas streams), or making use of the stream in the existing facilities. An example of the latter would be sending high-sulfur gas release to the boiler furnace instead of a flare, whereby the heating value of the gas is recovered rather than wasted. Moreover, emission may be better controlled than with flaring if the furnace is one that normally burns coal with stack gas cleanup to remove sulfur. For discussion purposes, results of the study on transients will be organized according to the following major areas:

Startup
Shutdown
Operating upsets (in sequence of processing steps)
Utilities and auxiliary facilities
Design considerations
Technology needs and opportunities

While there are a large number of coal gasification processes using somewhat different operating conditions, there are enough similarities that it has been possible to develop a generalized model for steam-oxygen gasification to give representative flow rates that can be used for environmental evaluation (13). Figure 8.1 presents flow rates for a typical large plant. Potential transient emissions that should be considered are summarized in Table 8.1.

8.2 Startup

During startup of a plant, the operating conditions will often be such that the products or byproducts are not suitable for sale. This poses special problems in disposing of off-specification materials, particularly in the case of gases which are costly to store relative to solids or liquids. Sulfur, syncrude, etc. could be stored and later reworked to meet quality requirements. However, in starting up a gasifier it may be necessary to incinerate or flare the entire output of a reactor until conditions are lined out and other parts of the plant such as acid gas removal and methanation are on stream. If the gas has been processed for sulfur removal, it generally will not result in major pollution problems when it is burned in a flare, although the heating value is then wasted. If raw gas is flared before sulfur removal, there can be a serious, though temporary, pollution problem. In some cases consideration can be given to sending this gas to a utility or other furnace where it is burned to recover the fuel value. When the furnace includes stack gas cleanup, a very desirable pollution control is achieved along with the recovery of heating value.

Depending upon plant size, there may be up to 30 gasifier vessels, each of which has to be started up in turn and brought up to system pressure. It has been reported for Lurgi type gasifiers (63) that they can be brought to operating conditions from a cold start in about 12 hours, so the exit gas might have to be flared for this length of time before it can be included in normal production. Flow rate of gas could correspond to the production of one gasifier, or up to 30 MM scfd of raw gas (8 MM scfd of SNG). Newer processes under development are expected to use as few as two gasifier reactors for the same production, in which case the transient gas flow would be roughly 15 times greater. For the latter case, roughly 200 MM scf of medium Btu gas may be involved in each instance, with a potential fuel value of $50,000 at a nominal $1/MM Btu. For a Koppers-Totzek type gasifier it has been reported that it can be started up and brought on stream in as little as 1 hour (64).

A common startup problem is waste water treating facilities, particularly the biox (biological oxidation) unit. It may take 1-2 weeks to develop and acclimate the bioculture so that it is highly effective for destroying the chemicals and other constituents present in the waste water. A final holding pond is usually provided, with a holding time of 1 week or more, which could alleviate waste water problems during startup.

Figure 8.1

Flowrates for a Representative Coal Gasification Process

(Tons per day unless specified otherwise)

(Reference 13)

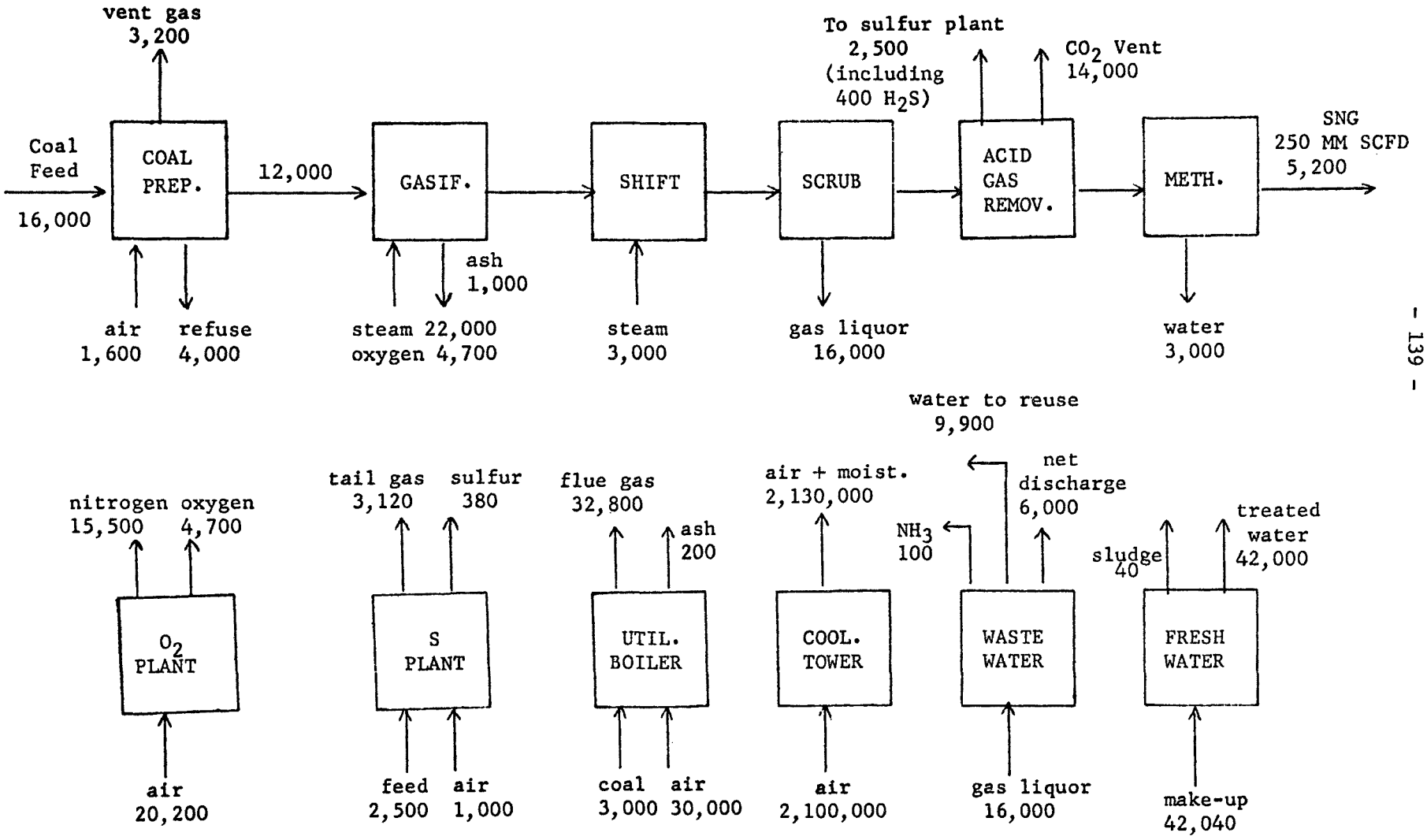

Table 8.1

Possible Sources of Transient Pollutants

Coal handling - broken belt, spills

Coal grinder - breakdown or motor failure

Coal screening - breakage, dust

Coal dryer - fire or broken bag filters

Coal pretreater (if used) - fines carryover, tar emulsion

Lock hoppers - valve failure, dust in vent gas, plugging

Coal pressurizer (slurry feeder) - breakdown or leaks

Slurry preparation - flashing of vapor if coal becomes wet

Ash removal - dust, steam cloud, odors, if valves fail

Tar handling - emulsions, solids, paste

Dust scrubber - plugging, spills of sour water

Shifting - plugging and cleanup, dust

Acid gas removal - chemical purge, sulfur or entrainment in CO_2 vented due to upset

Methanation - leaks of toxic CO, carbonyls, nickel dust

Sulfur plant - odors, fire, chemical wastes, burner failure

Hydrogen manufacture - similar to a complete gasification plant

Steam supply - failure, contamination with solids or gases

Power supply - failure

Motors, turbine drives, gear reduction, noise due to equipment malfunction

Pumps and seals - breakdown, leaks

Compressors and seals - breakdown, leaks

Valves, piping, flanges - leaks

Heat exchangers - leaks, rupture

Furnaces - flameout, smoke, or noise due to malfunction, tube rupture

Water treating - odors, oil, suspended solids, etc. from sudden surges upstream

Ponds - leaks, overflow

Solids disposal - dust, leaching, runoff due to erosion

Instrumentation - false readings, failure

Blowdown system - overloading, freeze up

Table 8.1 (Cont'd)

Possible Sources of Transient Pollutants

Pressure relief valves - leaks

Vacuum exhaust - on steam condensers, distillation, dust cleanup

Blind changing - leaks, spills

Sampling - purges, leaks, upsets

Product storage - vapor breathing, spills, tank cleaning

Other - corrosion, erosion, drains on equipment

Other concerns on the plant startup are associated with spills, leaks, vents, drains and purging. Spills of coal may occur on conveyors and handling, or from unplugging lines, hoppers, etc. Providing a vacuum cleanup system may be one answer, and of course dust control inside of buildings is essential for safety. Spills of heavy tar or oil may occur so plans for cleanup should be included, taking into account the carcinogenic nature of such materials. Similarly, leaks of liquids should be cleaned up, in some cases by flushing to a separate "oily water" sewer system. Leaks of gas, as on valves and compressors might best be controlled by a thorough program of inspection, monitoring, and maintenance.

Startup usually involves purging equipment with inert gas or nitrogen, drying of insulation etc., and then displacing with a combustible gas. Mixed gases are vented during the operation, and unless these are perfectly clean they should be collected and sent to a blow-down system and incinerator. Consideration can be given to using the utility furnace or a process heater to provide incineration. Considerable condensation of water is frequently encountered during startup, for example from drying out castable refractory linings. This can be removed via drains at low points on the equipment and included with makeup water.

Many proposed designs have planned on using clean products from the process (gasification or liquefaction) as plant fuel to control pollution. This fuel is of course not available at startup. Rather than add extra pollution controls or a separate fuel gas manufacturing systems, consideration should be given to storing low sulfur liquid fuels as required for startup. This applies to coal drying, process furnaces, utility boilers, etc.

One other example of environmental impact associated with startup will be given, relating to preparation and activation of catalysts. Methanation often uses a nickel base catalyst that is carefully reduced and activated in situ. Gas streams used in the treating operations may have to be disposed of by scrubbing or incineration. In addition, fines are rejected and should be reclaimed. Nickel carbonyl can form at temperatures below 400°F and is highly toxic. Therefore the catalyst must not be exposed to normal syngas containing CO except at temperatures above 400°F. The methanation catalyst can be pyrophoric in air, so precautions are needed. With other catalysts, such as shift or hydrotreating catalysts, other specialized treating and handling procedures are used, resulting in different streams and effluents that must be evaluated. Environmental concerns are similar. While this discussion on catalysts is brief, it is intended to illustrate the type of concerns and impacts that need to be covered by environmental planning, some of which can be unexpected and result in unnecessary problems if they are not addressed early enough in the program.

In planning startup procedures, the order in which the various units are activated should be considered from the standpoints of environmental controls and conservation of resources. Thus, by starting the utility furnace first, it is available for incineration (and sulfur control if it includes stack gas cleanup). Steam is then available to start up an oxygen plant which provides dry nitrogen for purging. Waste

water treating can then be activated, followed by coal preparation and the sulfur plant. Hydrogen manufacture, with its acid gas removal, may have to be put in operation before the conversion unit (gasification or liquefaction) can be started. Then the conversion unit, ash handling, filters, etc. can be started, followed by systems for treating and handling products and byproducts (hydrotreating, ammonia, phenol, etc.). This may not be the actual order of startup decided upon, but is intended to call attention to its impact on environmental concerns so that the best overall decisions can be made.

A more quantitative evaluation of potential transient emissions will now be given, based on a specific process. For gasification, the BIGAS process will be taken as an example and will be based on the flow plan in Figure 8.2. Flow rates of the various streams are shown on the figure, while specific points of possible transient emissions are indicated by letters within a circle. These latter items are identified and described in Table 8.2, including information on quantity and composition where these can be estimated.

In the case of coal liquefaction, the example is based on the SRC process to make clean boiler fuel, as shown on the flowplan in Figure 8.3. This is representative of a liquefaction process using low severity and low hydrogen consumption, to make a clean fuel that can be burned without having to control sulfur or particulate emissions. Again, the potential transient emissions are indicated on the flowplan by letters within circles, while the amount and composition of these is given in Table 8.3 for the cases where they can be estimated.

8.3 Shutdown

Transient emissions can result when facilities are shutdown for inspection, maintenance, or as a result of some interruption. The shutdown may involve one unit such as a gasifier, or a train of equipment, and thorough preplanning can avoid or minimize pollution at these times. A planned shutdown will include the following steps at least, though not necessarily in this exact order.

- cut input of heat (e.g., oxygen flow)
- cool to above water condensation temperature
- transfer solids to storage
- cool further and remove liquids (oil, water)
- depressure system
- purge with inert gas, then air.

Cooling of a gasifier may take 24 hours or more. As gasifier temperature is decreased, gas composition will change so that normal operation of subsequent facilities cannot be continued, consequently a large flow of gas may have to be incinerated for disposal. The utility furnace should be suitable for this incineration. If the furnace is equipped with stack gas cleanup, sulfur emissions would also be controlled without relying on acid gas removal facilities. Flow rates would be similar to those discussed in Section 8.2 on startup.

Figure 8.2

BIGAS PROCESS - POSSIBLE TRANSIENT EMISSIONS

FLOWPLAN AND FLOW RATES FOR PLANT MAKING 250 MM SCFD OF PIPELINE GAS FROM W. KENTUCKY NO. 11 COAL

(NUMBERS ARE LB/HR EXCEPT AS NOTED)

(Letters in circles refer to transients - see Table 8.2)

(Reference 7)

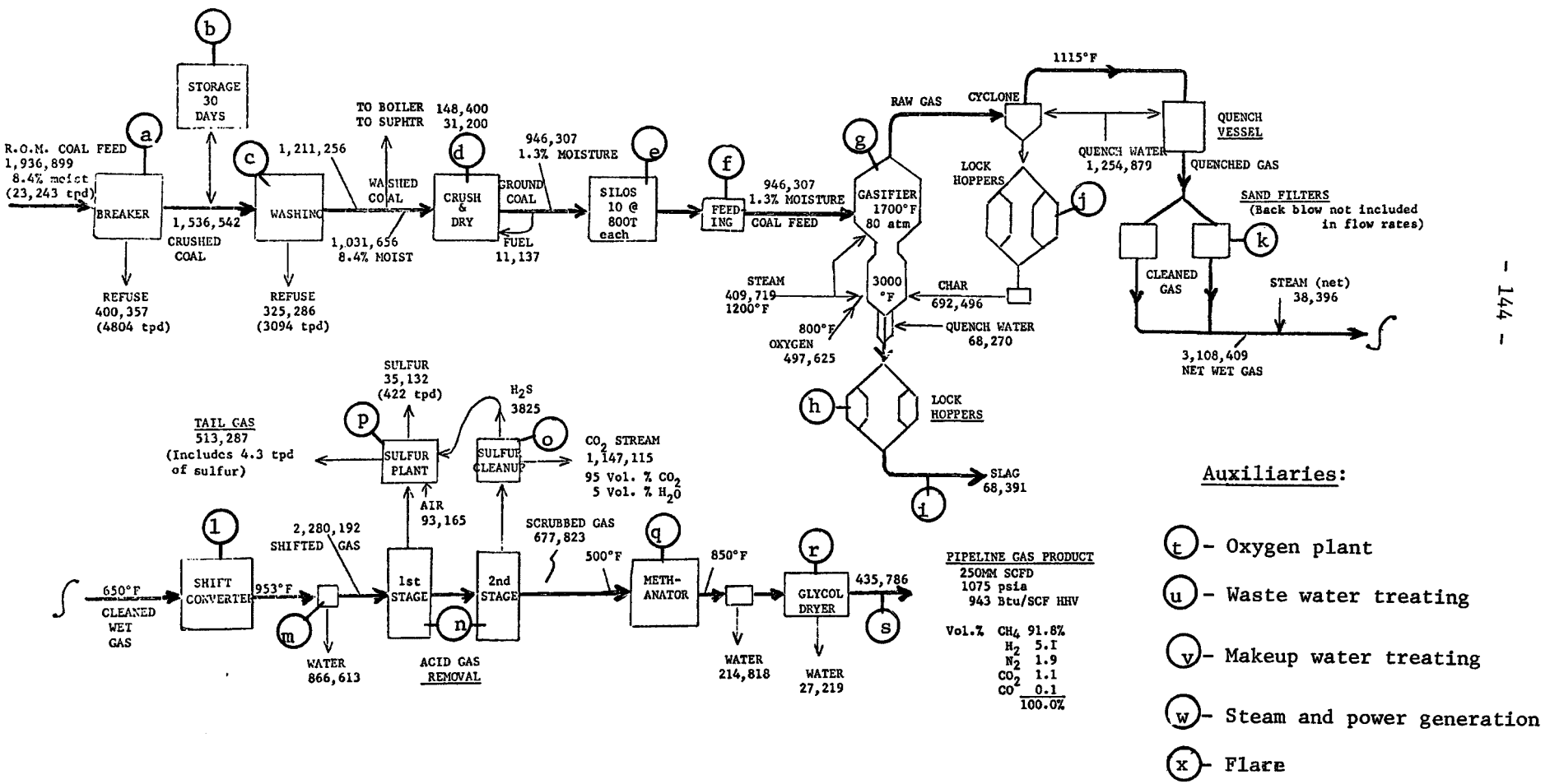

Table 8.2

Gasification - Possible Transient Emissions

(For Flowplan in Figure 8.2)

Item	Identification	Possible Transients and Amount
a	Refuse (gangue)	Dust loss at 0.1% would be 9600 lb/day Leaching of 10 ppm equals 100 lb/day
b	Coal Storage	Dust, runoff and leaching should be controlled. Fires must be prevented.
c	Cleaning refuse	Comparable to item a. in transients and amounts. If refuse includes 10% coal it amounts to a heating value of 7500 MM Btu/day.
d	Dust from dryer	Vent gas amounts to 45 MM scfd and broken bag filters could release 1-10 tons of dust in one minute.
e	Coal silos	Penumatic transport gas (nitrogen) is roughly 5 MM scfd and is normally recycled, but may be vented in upset, releasing dust.
f	Coal feeder	Medium Btu gas (270 Btu/cf) is used to pressurize lock hoppers and is normally recycled. Amount is about 35-70 MM scfd, which might be released to flare during upset. (see text)
g	Gasifier	Possible leaks on valves etc. while operating, plus dust and odors during maintenance.
h	Ash hoppers	Depressuring water slurry can release gas, vapors, and dust if normal cooling fails due to malfunction and external quench is required. Steam could be 15 MM scfd (see text).
i	Ash disposal	Dust loss at 0.1% would be 1670 lb/day Leaching of 10 ppm equals 17 lb/day
j	Cyclone hoppers	Possible leaks or venting in case of upset. Char flow is 2/3 of coal feed to lockhoppers (item f) but pressure swing may be only 5% as large. See original process report (7).

Table 8.2 (Cont'd)

Gasification - Possible Transient Emissions

Item	Identification	Possible Transients and Amount
k	Sand filters	Collected dust is blown back to gasifier. Dust may be a problem in maintenance.
l	Shift converter	Iron catalyst may be pyrophoric, requiring controlled oxidation at shutdown.
m	Sour water	Flow of 866,613 lb/hr could release H_2S and NH_3 and should be diverted to storage in case of upset.
n	Acid gas removal	Chemicals purge may be 150 gal/day for hot carbonate scrubbing, or perhaps 5-8 times as much for amine scrubbing. Suitable disposal must be defined. (see text)
o	CO_2 vent	CO_2 purged to atmosphere is about 14,000 tons/day and may contain sulfur compounds combustible gases, or entrained chemicals during upset (see text).
p	Sulfur plant	Feed gas contains 426 tons/day sulfur; release must be prevented. Thus, three units could be onstream operating at 2/3 capacity and able to pick up load if one unit shuts down.
q	Methanator	Transients are associated with pretreating catalyst and with shutdown (see text)
r	Dryer	Glycol or other drying medium may absorb combustibles which would be released upon regeneration.
s	Product SNG	May have to be flared if product is "off-spec." Flowrate 250 MM scfd.
t	Oxygen plant	No specific emissions problems except possibly due to defrosting of exchangers.
u	Wastewater treating	Upsets or spills can release sour water, phenols, particulates, odors etc. Soluble salts and trace elements are introduced, build up, and must be taken care of. See text discussion in Section 8.4.11 on this very important area requiring control of transient emissions.

Table 8.2 (Cont'd)

Gasification - Possible Transient Emissions

Item	Identification	Possible Transients and Amount
v	Makeup water treating	Chemicals are used in water treatment (see Table 8.6) including sulfuric acid and caustic for back washing to regenerate ion exchange resins, resulting in intermittent waste streams that should be stored, neutralized, and sent to waste water treating.
w	Utilites	Sulfur in coal burned may be 100 tpd (see Figure 8.1) and would be released if stack gas cleanup fails, along with part of 200 tpd ash. Soot blowing or tube failure could cause transient emissions as discussed in text section 8.4.12.
x	Flare	Should be designed for complete combustion with control of smoke and noise. Recovery of condensibles should be maximized and no liquids (especially combustible ones) should be allowed to reach the flare (see text).

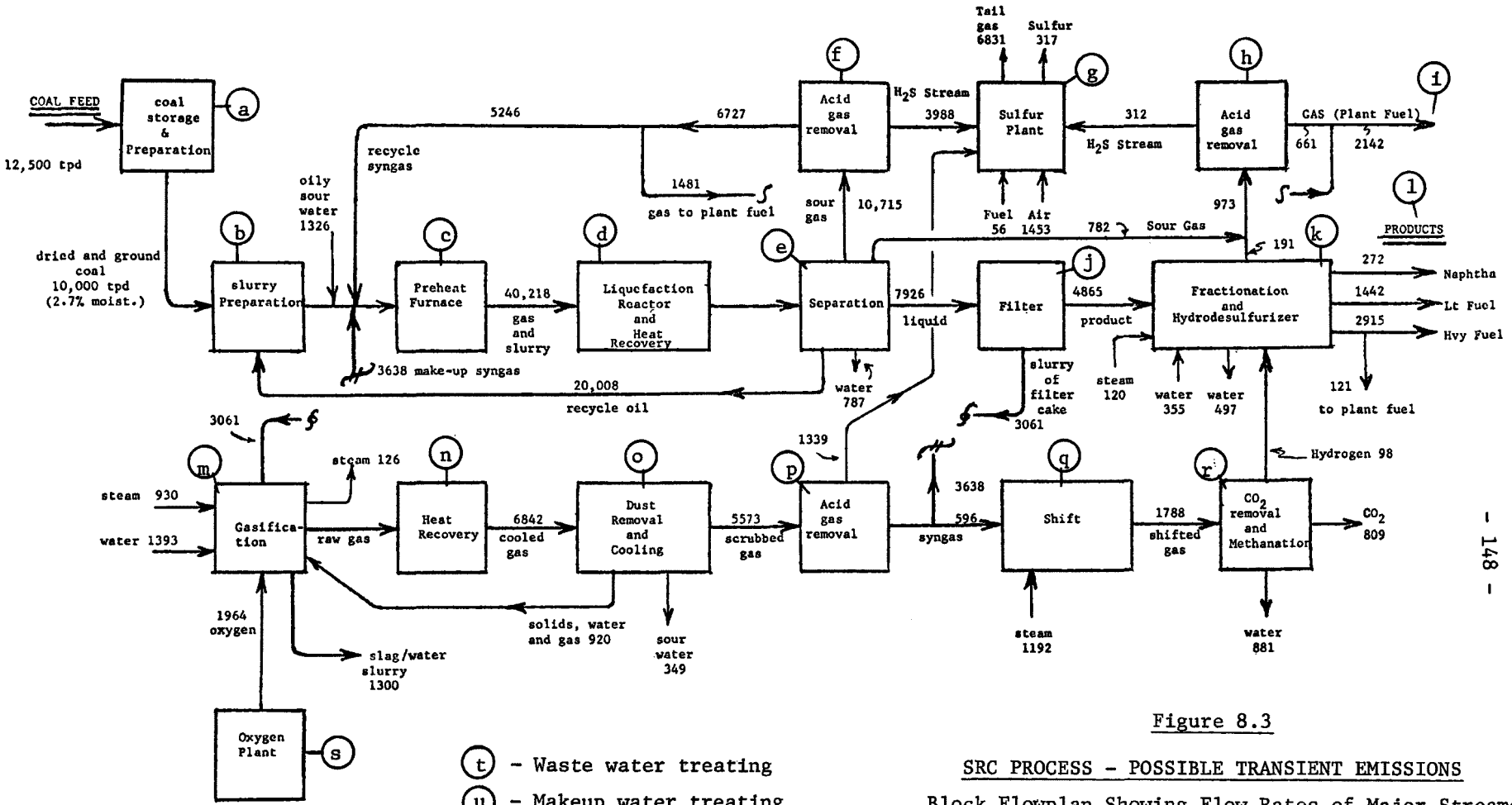

Figure 8.3

SRC PROCESS - POSSIBLE TRANSIENT EMISSIONS

Block Flowplan Showing Flow Rates of Major Streams

Numbers are flow rates in tons/day. Letters in circles refer to transients - see Table 8.3

(Reference 42)

Table 8.3

Transient Emissions from SRC Process

(See Figure 8.3 for Identification of Streams)

Stream	Identification	Remarks
a	Coal preparation	Dust loss could result from rupture of bag filter on dryer vent gas e.g., due to moisture condensation during startup.
b	Slurry preparation	Coal is mixed with hot recycle oil and steam or oil vapors can flash off. Two % moisture in coal would amount to 200 tons/day. Recovery is needed as well as odor control.
c	Preheat furnace	Furnace is normally fired with clean fuel but imbalance on air/fuel can cause smoke. Tube failure could release a fraction of the 40,218 tons/day slurry flow rate. Oil fuel may be fired during plant startup (see text).
d	Liquefaction	Operation is at ultra high pressure so is subject to leaks of liquid, gases, and vapors. Thorough monitoring, inspection, and maintenance should be provided.
e	Separation	See item d. Also, sour water is separated and will release flash gases if depressured, that could amount to over 2 tons/day and must not be released.
f	Acid gas removal	See item d. Large volume of chemical solution is circulated and may require purge that could be a pollutant. Depressuring will release flash gas as in item e.
g	Sulfur plant	Upset or shutdown would release sulfur to atmosphere and suitable protection is needed, as by multiple units having excess capacity (see text). Maximum potential release is 317 tons/day sulfur in feed streams.

Table 8.3 (Cont'd)

Transient Emissions from SRC Process

Stream	Identification	Remarks
h	Acid gas removal	Similar to item f, but any failure to perform will release sulfur into plant fuel gas, (294 tons/day of sulfur in feed gas).
i	Plant fuel	Gas to fuel could contain sulfur if acid gas removal is inadequate. May have to be flared at times during startup resulting in smoke and noise.
j	Slurry filter	Heavy tar is filtered using precoat. A difficult operation subject to leaks and spills, especially when plant operation is not smooth. Containment curbing and hoods, etc. may be needed (see text)
k,l	Product treating	Fractionation and hydrodesulfurizing are similar to normal petroleum refining practice which provides background for proper pollution controls. Controls should be included on vents from vacuum pumps plus product handling and storage. Heavy product to plant fuel can cause smoky flame if not properly heated and atomized.
m	Gasification	Similar to gasification for SNG manufacture - see Figures 8.1 and 8.2, also Table 8.2.
n	Heat recovery	Possible transient emissions from tube failure or dust deposits which may contain trace elements - see item m.
o	Dust removal	Considerable handling of solids and sour water (1269 tons/day) could lead to spills, leaks, and flash gas. See items e,m,n.
p	Acid gas removal	Large amount of sulfur is separated (109 tons/day) and must not be released to atmosphere during startup or upsets (see text and item f).

Table 8.3 (Cont'd)

Transient Emissions from SRC Process

Stream	Identification	Remarks
q	Shift conversion	Similar to shift conversion in gasification (see Figure 8.2 and Table 8.2). Catalyst may be pyrophoric, and special pretreatment may be used.
r	CO_2 removal	Note that gas is free of sulfur at this point so CO_2 vent stream is less apt to be contaminated than is SNG manufacture. Also, CO_2 stream is smaller (809 vs over 13,000 tons/day) but combustible content is still a concern.
s	Oxygen plant	Similar to that in gasification process see Figures 8.1 and 8.2, also Table 8.2
t	Waste water treating	- see item s
u	Makeup water treating	- see item s
v	Utilities	- see item s
w	Flare	Should be designed for smokeless combustion and with noise control. Recovery of condensibles should be maximized and no liquids (especially combustible ones) should be allowed to reach flare (see text).

Transfer of solids to storage merits particular attention in that the flow rates are large and the facilities are used infrequently and for short times. Pneumatic transport is the usual method and specific dust recovery equipment must be provided, such as cyclone separators followed by bag filters. These might be the same ones used on coal preparation which could be designed to handle the transport gas.

Enclosed storage is needed for many of the liquids removed at shutdown. Heavy oils and tars from coal processing are carcinogenic, while these and lighter oils can have strong odors. Water layers generally contain various compounds of sulfur, nitrogen and oxygen that should not be allowed to escape to the atmosphere. In some cases these liquids may be stored until subsequent startup when they can be used to recharge the system, or are disposed of by working off, for example, through product treating or waste water cleanup.

When the system is depressured a large volume of gas is released which can contain combustibles, carbon monoxide, sulfur compounds, etc. For a large gasification plant it is estimated that up to 1 MM scf of gas could be released on depressuring. Preferrably, the gas should be incinerated before release, as in the utility furnace or a flare.

In preparation for maintainence, the system will be purged to remove toxic and combustible gases. Nitrogen may be used for this purpose, if available from an oxygen plant, and will usually be followed by purging with air. Consideration should be given to sending the purge gases to an incinerator or furnace, at least during the initial purging, depending upon the content of contaminants.

Special operating procedures are often used for shutting down specific facilities, which in each case should be reviewed for environmental impacts and controls. As an example, certain materials may be pyrophoric under normal operating conditions, such as iron base catalyst used for shift conversion, nickel methanation catalyst (65), or certain carbonaceous deposits. In such cases deactivation may be accomplished by purging with inert gas containing 1-2% oxygen, and gradually increasing oxygen content to that of air, while monitoring and regulating temperature levels (66). Treated gas in such operations will usually be recycled, but all purges from the system should be incinerated or suitably treated if they contain significant amounts of toxic or combustible materials.

As in the case of startup, the order in which individual sections of the plant are shutdown can greatly affect environmental impacts, and should be evaluated carefully on each project. The utility system will of course be one of the last areas to be shutdown, together with pollution control systems such as waste water treating, sulfur plant, etc.

After cooling and purging with air, the equipment is ready to be opened for routine maintenance, but before discussing this, it is appropriate to cover transient emissions associated with other interruptions of operation that are unintended rather than planned for. These are designated as operating upsets and will be discussed in detail in the following section, in the order of normal steps in the processing sequence, followed by auxiliary facilities such as utilities, sulfur plant, etc.

8.4 Upsets

8.4.1 General

One of the first considerations with regard to upsets resulting from equipment malfunction or other causes is that they happen so quickly that the generation and flow of process streams cannot be cutback fast enough, so part or all of the stream has to be diverted to the blowdown system or to an emergency flare. In the case of liquid or solid streams they can usually be diverted to storage. While storage of gases in such situations may be desirable, it is often impractical or uneconomic, so that a common practice is to flare gas streams during operating upsets. Flare systems have been developed that facilitate recovery of condensible portions of the stream before flaring (67), and that minimize undesirable smoke or noise from the flare burner (68). Consideration should be given to this background when defining specific facilities for a plant, as well as to assuring complete combustion.

A second consideration is that leaks and spills can be expected so that provisions for minimizing them and for cleanup should be included. Pumps and valves are known to be sources of emissions (69). In addition, solids storage, handling, and transport can cause transient emissions, as in the case of belt conveyors or bucket elevators that can break, jam, cause spills, or fires. Thus, failure of a belt or critical motor can disrupt operation and sometimes the only practical solution is to dump material on to the ground in order to make repairs and resume normal operation. Therefore facilities are needed to cope with various situations that can result in spills or leaks. Thus, vacuum cleanup trucks can be used to reclaim for reuse any solids that are spilled. Water flushing can be provided to wash residual solids to a recovery pond, and can also be used to flush oil spills to the "oily water" sewer system where they will be recovered to the maximum extent practical. In critical cases, curbing is needed around specific process areas to contain leaks and spills so that they can be flushed to cleanup and recovery facilities. In general, the objective should be to recover and reuse all miscellaneous losses to thereby assure that they do not leave the plant as undesirable and poorly defined effluents.

Fires are of course a most serious upset and can cause extreme and uncontrolled emissions. While the likelihood is not great, utmost consideration should be given to their prevention and control. Storage areas for solids or liquids are most vulnerable, and extensive background on coal storage as well as oil refinery practices should be used fully (70). A similar concern is possible tube failure in furnaces used to heat combustible materials such as oil or gas. Monitoring and control procedures have been developed in oil refining. Flow to the tube is stopped as soon as possible, while blanketing steam can be added to the furnace box to inhibit combustion and overheating. Instrumentation and automatic valves will often be warranted to minimize the impact of tube failures.

Tube failures or leaks in exchangers are an additional concern. With air cooling, such emissions can be dispersed in a large flow of air passing through the exchanger. In the case of water cooling, material can leak into the cooling water system and cause severe contamination of air passing through the cooling tower in addition to possible operating

problems that could upset the plant. Coal conversion processes may operate at very high pressure 1000-2000 psig, which increases the environmental concern since the instantaneous flow rate through any given break will be approximately proportional to the upstream pressure. Prior consideration of such possibilities and plans for handling them are the best approaches to the problem, together with monitoring and automatic controls on critical services.

From the discussion so far it will be apparent that considerable environmental protection can and should be built in during the planning and design phases of a project. This is much more efficient and lower cost compared to add-on facilities. Factors to be considered include number of parallel trains to use, spares on pumps, exchangers etc., leak control on pumps, filters, and valves, emergency power source, etc. Further consideration of such factors will be given in a subsequent subsection entitled Design Considerations, after discussing potential transient emissions from specific processing areas.

To provide a reference framework of flow rates for examining transients, a generalized or representative coal gasification process has been developed as shown in Figure 8.1. While there are a large number of different gasification processes offered, for a given product rate they are quite similar in most of the major flow rates, such as the amount of CO_2 rejected to the atmosphere from acid gas removal. Thermal efficiencies are also similar in the range 65-70%; consequently, the coal feed rates do not differ greatly between processes when using the same coal feed. The generalized flow plan of Figure 8.1 facilitates analysis of transient emissions in coal conversion operations and will be referred to in the discussions that follow. Primary emphasis will be on gasification since it presents more difficult problems in that it is generally impractical to divert large flows of gas to storage and in an emergency they have to be vented or flared, whereas liquids or solids can more easily be diverted and stored. Liquefaction also includes most of the same operations as gasification, such as coal preparation, acid gas removal, utilities, etc. and frequently includes gasification for manufacturing hydrogen. Flow rates for one specific gasification process during normal operation are shown in Figure 8.2, while those for one specific liquefaction process are shown in Figure 8.3. Where reference is made in the text to flow rates for a typical large plant, the size refers to these figures.

8.4.2 Coal Storage and Preparation

The first operation is to receive and store the coal feed. It may be delivered by rail, in which case unloading of cars can result in excessive dust unless facilities are properly designed. Any oversight is then difficult and costly to correct. If coal is delivered by truck there is the additional concern of dust stirred up on roads. Some studies have found roads or other fugitive emissions to be a major source of pollution (71). Paving will help except that dust can accumulate on the road due to leakage from the trucks. Wetting or washing the road is often proposed but consumes valuable water. An environmentally engineered rail system may be a better method. Concerns on coal storage have been covered earlier in this report, however, special attention should be given to controlling dust emissions associated with unloading and stacking

the coal on piles, and retrieving it by front end loaders or by bucket wheels. The objective is always to avoid emission of dust, rather than trying to recover it after it is airborne.

Conveyors of various types are used in the coal preparation area, all of which are subject to spills, plugs, jams, other failures, and fires. To the extent possible, conveyors should be enclosed and special hoods provided at transfer points to collect dust, using a vacuum collection system if needed or water sprays where appropriate. The magnitude of potential spills should be clearly recognized, since total flow rate of coal on conveyors can be 500 tons/hour on bituminous coal and 1000 tons/hour on lignite.

Effective provision for cleanup is an essential part of environmental planning for coal processing in general, and for coal preparation in particular. Effective backup on critical equipment is also needed, for example to maintain the vacuum system in case of mechanical or power failure.

8.4.3 Crushing and Screening

Crushing and screening is generally the next step and is subject to considerations much the same as for conveyors. In addition there is a possibility of off-specification non-usable material due to screen breakage or for other reasons. This may have to be diverted and reprocessed or discarded. For a typical coal conversion plant the flow rate is 500-1000 tons/hour, consequently a rapid response is needed. If the diverted material has a high content of combustibles it would be undesirable to discard it without recovering the heating value, with the additional concern that it could catch fire after disposal.

When coal washing and cleaning is part of the operation, large volumes of water and fine refuse are handled. Consideration should be given to spills, leaks, and other losses of wash water and all chemicals or additives used in the operations. Drying out of the area, equipment, or ponds can create a dust nuisance that should be avoided by good operating procedures and proper housekeeping. Disposing of the large amounts of refuse can cause transient emissions from dust, fires, leaching, etc. that must be protected against. Fine refuse from coal cleaning may amount to 1000-3000 tons/day for a large plant, while coarse refuse may be even more. Therefore a dusting or runoff loss of even a fraction of one percent could be excessive. Suitable gages have been developed and used to monitor local dust concentrations and to help identify sources of the dust (72).

8.4.4 Drying

Drying is nearly always included in coal conversion processes if only to assure reliable coal feeding and is particularly needed if fine grinding is involved or if the coal feed has been exposed to rain. Since conventional drying is accomplished by directly contacting ground coal with a large volume of hot combustion gases, very effective control of dust emissions is required. Typically, cyclones are used followed by bag filters. Upsets may occur such as rupture of bags that

would suddenly release large amounts of dust to the atmosphere. Gas flow through the dryer is perhaps 30 MM scfd so release of only a fraction of this through a broken bag would be serious, even though it might be shut off within a few minutes.

Vent gas from the dryer may contain about 50% moisture, so that under certain atmospheric conditions it will form a fog or plume upon mixing with ambient air, and can affect public areas such as highways or air traffic (73). A simple solution is not available but the problem should be addressed. One approach is to use an indirectly heated coal dryer in which moisture removed from the coal would be contained and recovered (7). Alternatively the moist vent gas might be cooled to recover water and then reheated, although this route would obviously be costly and may not be warranted.

One final comment on the coal dryer deals with the emission of odors or combustibles. Depending upon the equipment operation and on the specific coal feed, some volatile materials may be present in the vent gas that could cause undesirable odors. This is more likely with reactive coals such as lignites, and when local overheating of coal particles may occur. Appreciable amounts of volatile combustibles are generally released when coal is heated above 500°F (6). Oxidation also becomes appreciable and may result in temperature runaway and fire, causing very extensive emissions and damage to bag filters, if used. Oxygen content of the drying gas is normally maintained at less than 10% for safety reasons. Additional information is needed to determine when and whether there is an odor problem in coal drying, but if there is, then incineration of the vent gas would be a possible solution.

8.4.5 Pretreatment

In some gasification processes the coal feed is pretreated to destroy caking properties that could cause operating problems (9). The usual pretreatment consists of mild oxidation in air at 700-800°F with considerable heat release. A large volume of air is used, typically 1.0 lbs air/lb coal, and tar, moisture, and other volatile matters are released requiring extensive cleanup and attention to pollution controls. Transient emission could occur if an upset causes formation of tar-water emulsions that do not separate. If this happens, there should be storage facilities for the emulsion so that it can be reprocessed at a convenient time, possibly requiring chemical treatment or distillation to break the emulsion. In one calculated example the amount of tar from pretreating was estimated to be 630 tons/day while the water emulsified could be several times this. Heat and material balances calculated for pretreating are given in Table 8.4.

The normal tar production will contain some fine solids. At a solids content of 2% the amount is 12.6 tons/day which may have to be removed and disposed of when the tanks are cleaned periodically. With cleaning twice a year, the accumulation could be as much as 2000 tons. Incineration in a fluid bed (with sulfur removal) is one possible disposal method for this oily waste.

Table 8.4

Coal Pretreatment - Calculated Yields and Balances

250×10^9 Btu/D Pipeline Gas

Coal Feed	Eastern bituminous, high sulfur	
Major streams (74)	Coal Feed	Pretreated Coal
Tons per day	14,700	12,720
% Moisture	0	0
Btu/lb. HHV	13,186	11,930 (est)
Analysis: wt. %		*
C	71.50	71.27
H	5.02	3.97
O	6.53	6.87
N	1.23	1.00
S	4.42	3.83
Ash	11.30	13.06
	100.00	100.00

Coal Pretreater	
Oper. conditions	800°F, low press.
Char yield, wt. %	86.5
Air In, scfm	260,000**
Off gas Btu/cf HHV	39
Tar liquid by prod. tons/day	630***
By prod. steam made, lb/hr	946,000

---

* Calculated from balances in reference 74.

** Air rate is estimated from heat required to generate steam and provide sensible heat load on preheater (75). Corresponds to 2.6 SCF oxygen per pound of coal feed, compared to 1.0-1.5 indicated to be minimum requirement in reference (76).

*** Estimated from yields and heat balance on pretreater.

Low Btu gas is also a product from pretreatment with air, and after sulfur removal it is used as fuel. However, its heating value is very low, 39 Btu/scf for example, so that special burners will be needed to assure complete combustion and high reliability is needed to avoid flame out that would result in emission of combustibles. As for solids handling and gas cleanup operations, it will be seen that these are much like a typical gasification process and therefore transient emission concerns are similar. These will be discussed further in the section 8.4.6 on Coal Conversion.

8.4.6 Coal Conversion

The techniques for converting coal to clean products that are pertinent to this discussion are gasification and hydroliquefaction. Both of these are subject to upsets that could result in unacceptable transient emissions. Both operate at high pressure - up to 1000 psig in the case of gasification, and about 2000 psig for liquefaction. High pressure increases the chance for leaks as well as their magnitude. Of particular concern are possible leaks in heat exchangers, valves, pumps, compressors, and connections as discussed earlier in Section 8.4.1. Also, the possibility of rupture of exchanger tubes and furnace tubes is of great concern, especially due to the high operating pressure. Thus, exchangers in cooling water service could leak contaminants into the cooling water system, while those in air cooling service could leak and contaminate the air used for cooling. Composition of the material leaked will of course depend on the gasification or liquefaction streams involved. Failure of a furnace tube could release combustibles into the combustion zone, or in the case of convection tubes the release would be into flue gas going to the stack. Therefore, such high pressure equipment will call for close attention and monitoring, with provision for immediate action and possible automatic instrument response in order to control undesirable transient emissions. Areas subject to upsets that are specifically pertinent to gasification or to liquefaction will be discussed in the next two subsections.

8.4.6.1 Gasification

Coal is usually fed to the high pressure system by means of lock hoppers in a cyclic operation. First a hopper is charged with coal feed, then it is brought up to system pressure by adding raw or product gas, and then it is fed into the reactor. At this point the empty hopper is filled with high pressure gas which must be released, recovered, and used. The gas may be cleaned up to remove dust, recompressed, and reused on the lock hoppers, or it may go to a low pressure fuel gas system but clean up is also required in this case. Since the operation is cyclic, the gas flow will take place in surges that can be many times the average flow. Upsets can aggravate the surges, for example a valve may plug with solids and suddenly break through. Such plugs can be caused easily by wet coal or moisture condensation. The gas recovery system needs to be capable of accommodating surges of dusty gas while giving dependable clean up.

The possibility of leaking valves must be guarded against and provided for in the off-gas recovery system, as it can greatly increase the amounts of gas and dust to be handled. Leaking may result from worn valves, or if particles are left between the seating surfaces. By way of illustration, an annulus 1/100 inch wide and 12 inches diameter could leak over 1 million scf per day of gas from a pressure of 500 psig.

Volume of gas remaining in the empty lock hopper after dumping to the reactor can also be calculated. It amounts to about 2000 scf of gas per ton of coal fed, for the same 500 psig operating pressure. Putting it another way, the total volume of gas from depressuring lock hoppers may be 5% of the raw gas volume or 10% of the SNG product volume.

Similar considerations apply on the lock hoppers used to remove ash or char from the gasifier. The tons of ash are much less than the tons of coal feed, although its density may be much less, depending upon the type of gasifier. In some cases the ash lock hoppers operate on a water slurry of ash, thereby alleviating the gas leakage problem. But the ash system has added potential for transient emissions due to the friable dusty nature of most ash (unless it has been slagged), and the possibility of withdrawing hot ash. If the ash is dry when withdrawn, it will generally be wetted down with water to control dusting, with only a small evolution of steam which can be collected and condensed. However, upsets could occur, for example in the lock hopper system, such that the ash could be quite hot as it is withdrawn. Then cooling it by water sprays could create extreme turbulence and dusting, requiring extra environmental controls to prevent transient emissions.

Sometimes the ash may be slagged in the gasifier, as in the Koppers or BIGAS processes. It is usually dropped into water to quench and shatter it, so that it can be handled as a slurry. The water slurry will be quite hot when withdrawn and tend to flash off steam and vapors that may contain sulfur compounds and cause undesirable odors, therefore all off gases should be contained, returned to the system, or properly cleaned up, or disposed of by incineration for example.

As in any high pressure process, all liquids that are withdrawn will tend to flash and give off vapors, since they have been saturated with gases and vapors within the high pressure system. The ash-slurry system is no exception and the water can be expected to be saturated with whatever gas it has been exposed to, such as raw gas containing sulfur. While carbon monoxide and hydrogen are only soluble in water to the extent of 1-2 vol. %, carbon dioxide solubility is much higher, about 0.4 to 1.1 volume per volume of water for 1 atmosphere partial pressure. At gasifier pressure, the partial pressures are much higher so that release of flash gas must be considered when defining environmental controls. Thus, variations in temperatures and flows during an upset can cause transient releases of flash gas. It may be possible to purge the ash or char system with steam to sweep out other gases so as to simplify the flash gas problem.

In those cases where the ash is dry as removed from gasification, there can be transient dust from handling operations. Covered conveyors, hoods, and other control measures such as water sprays should be used where practical.

Various other upsets can occur in the gasification system, such as: failure of pumps, drives, or other equipment, or stoppage of coal feed, deterioration of refractory lining, etc. Some of these will cause temporary interruption of the operation for minutes or hours without a full shutdown, while others will require cooling the unit down for maintenance. In all cases, control of transient emissions is needed, as discussed in this section 8.4 and section 8.2 on startup and 8.3 on shutdown considerations.

One other type of upset that should be discussed is the possibility of overpressuring the system, in which case the safety relief valves automatically open to release gases to the blowdown and flare system. To the extent possible without jeopardizing safety, it is desirable to cool the gases to recover any condensibles, scrub to remove particulates and then incinerate the combustibles (e.g. in a flare). In some cases the decision may be made to discharge pressure relief valves directly to the atmosphere, but this should only be done after a careful and thorough study justifies this as the best practical approach.

It is common for pressure relief valves to leak. Leaks are particularly likely after they have once been activated and, since the usual valve is spring loaded or weight loaded, relatively little force is available to make the valve seat properly. In addition, particles or dirt may interfere with reseating in dusty services as on the gasifier. Spring loaded safety valves give protection together with good prospects of keeping the unit onstream when the upset is minor and correctable. Frangible discs are sometimes used as an alternative for fastest possible depressuring, but generally result in a full shutdown of the system since they cannot be reclosed and have to be replaced. Recently a combination has been offered, using a basic spring loaded valve together with a frangible disc to assure against leakage prior to activation of the safety valve. Some safety valve practices are undergoing reexamination, and recent publications suggest the possibility of having gate valves upstream of the safety valves, (locked open!) to allow checking out the valves or replacing them while the plant is onstream. Others have proposed reliance on instrumentation for protection by isolating the main sources of pressure so that only a small pressure relief valve is needed rather than one to carry the entire process flow. Obviously, any changes in safety practices will only be made after very thorough study. The present discussion should not be taken as a recommendation for any changes, but rather that each situation should be examined and reviewed so that the best decisions are made regarding selection,sizing and point location of pressure relief valves.

8.4.6.2 Liquefaction

In coal liquefaction systems, the coal feed is mixed with hot recycle oil to form a slurry which is pumped to high pressure. A slurry system is also used in some gasification processes, in which case the following comments are pertinent. Dried coal may still contain 1-2% moisture, which flashes when it is mixed with hot oil. Provision is normally included to recover this as well as gas and vapors released from the oil when it is depressured. However, there may be occasions when the volume of flash gas is greatly increased due to unexpectedly high moisture in the coal, possibly caused by an upset on the dryer. If the flash gas passes

through a cooler, as in some designs, then more cooling will be required and more water will be condensed and have to be disposed of or stored temporarily. Increase in flash gas will also result if there is an increase in the amount of light fractions in the recycle oil, as can happen unexpectedly due to an upset in the liquid separation facilities which supply the recycle oil.

Coal must be introduced and mixed with oil to form the slurry fed to liquefaction, and plugging is a common source of upsets on such systems. In case of plugging, the system may have to be flushed out with wash oil so suitable facilities should be provided together with storage to hold the wash stream so that it can be cleaned up for reuse.

The liquefaction reactants are a mixture of liquids, solids, and gases, whereas only solids and gases are present in gasification. Liquefaction is therefore more involved. For example, all liquid streams withdrawn from the high pressure system will contain dissolved gases and light fractions that can flash off upon depressuring. These flash gases should be recovered for use and adequate consideration and planning is needed so that recovery facilities are not overloaded by rapid removals during upsets. Plugging is again a possiblity and may call for flushing facilities as discussed for coal feeding. An upset may also carry heavy liquid from the reactor into gas handling systems, also calling for flushing facilities with adequate means for cleanup and reuse of the flushing liquid.

In designing the blowdown and flare systems, it is extremely important to protect against slugs of liquid hydrocarbons being discharged to the flare, as serious fires could result. Size of settling or knock-out drums should be made large enough to prevent any substantial entrainment of liquids in the gas being flared. If liquid combustibles were present, the radiant heat from the flare flame could increase greatly and become unacceptable. Moreover, drops of burning liquid might fall to ground level.

Again it should be emphasized that leaks in equipment are one of the major environmental concerns in coal liquefaction. Leaks in heat exchangers can contaminate the entire cooling water system, while in the case of air cooling leaks will cause releases directly to the atmosphere, as discussed in Section 8.1. Other possible equipment leaks to consider include pumps and compressors, valves, flanges, pressure relief valves, sample connections, etc. In addition, there is the possibility of rupturing furnace tubes, with consequent transient emissions. Liquefaction plants can easily have an odor problem as a result of leaks or spills of materials containing phenolic type compounds having a strong and persistent odor. These compounds can also cause undesirable taste if they get into drinking water, so special precautions are needed from this standpoint. In general, inspection monitoring and maintenance programs are an essential part of controlling transient emissions.

Liquefaction operations typically include some means to separate residual ash and solids from a heavy bottoms fraction of the reactor product. The method may use vacuum distillation or filtration. In vacuum distillation, a steam jet or mechanical pump is used to maintain the vacuum and return non condensibles to the atmosphere (77). Obviously, any surge of gases or

low boiling materials into the system will appear as an emission from the vacuum pump, so the pollution control system (e.g. incinerator), must be designed to accommodate surges such as those caused by upsets. Emulsions can also occur in the overhead recovery system of vacuum units and may require provision for storage and reworking.

Filtration is the other method used to remove solids from the heavy liquid. If a vacuum filter is used, the above comments are applicable. An alternative is pressure filtration in which case leaks and spills can be a problem. Filtration is a difficult operation, complicated by the fact that removing filter cake is necessary. Filtration involves solid, liquid, and gas streams all of which can contribute to emissions, including transient ones. With rotary filters a cake is scraped off, which may be pasty, hard to handle, and contribute to plugging difficulties. If plugging occurs, operation may be interrupted to open up equipment and wash it out. Special cleanup and collection facilities should be available for this. Often a precoat is used and can introduce additional emission problems in its storage and handling, application, and removal to disposal.

8.4.7 Shift and Cooling

The shift reactor may be a fixed bed of iron based or cobalt-molybdenum catalyst. During operation it might become partially plugged by dust, in which case efforts may be made to clear it by steaming or backblowing. Emissions would not be expected since the flowing streams will be contained and handled in the gas cleanup system. If the shift reactor must be opened for servicing, then transient emissions of the catalyst or deposits might occur. Emissions of dust, sulfur compounds, or iron carbonyl from iron type catalysts should be considered and protection provided as needed. Trace elements such as arsenic, lead, etc. may very likely build up on the shift catalyst and in this general area of the plant, requiring special protective measures. However, sufficient data on the subject are not yet available to allow defining the situation and methods for environmental control. Charging, replacing, and discharging catalyst especially call for dust control. Spent catalyst should be returned for reworking or disposed of in a way to avoid transient pollution from dust or leaching.

Gas cooling and scrubbing is the next operation, typically using a waste heat boiler followed by heat exchangers and a scrubber. The boiler and exchangers may develop leaks due to erosion or corrosion, causing emissions directly or indirectly. Protective measures include careful design, monitoring and inspection, preventive maintenance, plus employee training and education.

Scrubbing to remove dust is a critical operation to avoid problems downstream. An upset may result if water circulation is lost for any reason such as pump or motor failure. Attendant overheating or over-pressuring may lead to additional upsets. Deposits can occur, requiring extensive flushing of dirty water to sewers or storage. Transient emissions of gases, liquids, and solids can be controlled by prior consideration and planning, including appropriate sparing of critical pumps and other items. Provision could be made for example to automatically divert any severely contaminated water (as could result from a tube failure) directly to waste water treating.

8.4.8 Acid Gas Removal

One of the transient emissions on a coal conversion plant that is of greatest environmental concern is from the acid gas removal in case of upset. If it gives inadequate cleanup for any reason, gas product can not be used and will have to be diverted to a flare since sizeable storage or a complete backup system is hardly practical. The flare should be designed for efficient combustion, smokeless operation, and noise control. Sulfur emission could be very high from the flare until the difficulties are corrected or operation is cut back to avoid diverting to the flare. Typical flow rate (Figure 8.1) to acid gas removal is 32 MM scfh containing 380 tons/day sulfur, that potentially would be flared if all of the gas had to be diverted to a flare. One proposed design has 2 trains of acid gas removal each sized for 75% of the total flow, which would require diverting 25% of the total flow in case one train shutdown, assuming that the other train could be quickly brought up to its full capacity. Depending on the type of upset, partial sulfur removal might be maintained thereby decreasing emissions, but clearly, very thorough and careful planning and operation are required to minimize this large potential source of transient emissions.

A second major concern is possible contamination of the CO_2 vent gas rejected to the atmosphere. It is a very large stream, and many acid gas removal systems have difficulty in achieving a satisfactorily low sulfur level in the rejected CO_2. Therefore, upsets are liable to cause a temporary increase in sulfur level that could be very objectionable. It is not certain that the waste CO_2 stream will always be incinerated before release, since it is so large a stream that incineration would consume considerable additional fuel; however, incineration is one available control method to oxidize sulfur compounds, combustibles, and other contaminants.

Entrainment of scrubbing liquid into the CO_2 vent stream is another possible source of contamination, especially if there are upsets and surges in flow or pressure. Incineration, if used, may take care of this -- or consideration can be given to use of entrainment separation devices for protection.

The circulating chemical or solution used for absorption is often filtered to remove solids that tend to accumulate and could cause fouling or other problems. The filters are cleaned periodically and the waste material must be disposed of (78). In addition, cyclic interruptions associated with filter cleaning may cause upsets or result in emissions or leaks of gas or liquid. Operating procedures should be defined to minimize all transient emissions. The waste solids may represent residual coal ash carried along with the acid gases, or there can be rust particles or degradation products. Washing or incineration may be needed before disposal, depending upon its exact nature.

All processes for acid gas removal have chemical losses or chemical purge streams to dispose of as a result of leaks, vapor pressure, side reactions, degradation caused by contaminants, etc. Makeup chemicals are required, possibly amounting to 1.6 tons/day in the case of Rectisol methanol scrubbing (79) or 150 gallons/day for a Benfield hot potassium carbonate system (80). Other chemicals are often added as activators or to combat corrosion, fouling, or foaming (81).

It should be clearly recognized that all chemicals used by the plant must be accounted for, generally showing up as effluents, in which case effective and adequate environmental controls or disposal should be provided as necessary. Upset could result in unexpected contamination or degradation of the scrubbing medium, such that it may have to be purged and replaced. Storage should be available for purge materials so that they can be retained for reclaimation or ultimate disposal. Of course, storage is also needed for the normal chemical solution inventory to use when the system is shut down or emptied for any reason.

An area of great uncertainty is the fate of trace elements (As, Cd, Se, Cl, F, etc.) in the gas cleanup facilities. Some may pass through the gas scrubber into acid gas removal where they may deposit, react with the solution, or otherwise accumulate and have to be removed as transient effluents. More information is needed to define the problem.

Following acid gas removal, final traces of sulfur are removed by a guard bed of zinc oxide in order to protect the methanation catalyst. It is estimated that the zinc oxide will be replaced every 3 to 6 months. Fixed bed reactors are used, requiring depressuring and purging with nitrogen or inert gas for catalyst replacement or maintenance. These vent streams should be collected and returned to the system or sent to blowdown facilities for disposal. The spent zinc oxide cannot be regenerated easily but can be returned to a manufacturer for reworking. The total sulfur removed by the guard is only a small fraction of a percent of the total sulfur contained in the coal feed since most of it has been removed previously. Adequate dust control should be provided during dumping and recharging of zinc oxide and other materials used in the guard system. Experience shows that loading and unloading of catalyst or solids handling can cause a dust nuisance, which may require shields, hoods, and a collection system with cleanup. There also may be unappreciated health effects.

8.4.9 Methanation, Compression and Drying

At this point in the process the streams are very clean with regard to sulfur and dust but the high operating pressure can lead to leaks. Prior to methanation the gases contain considerable CO which is toxic, so monitoring the process area and other precautions may be needed for protection. There is also a possibility of forming highly toxic nickel carbonyl as mentioned earlier, if upset conditions lead to a catalyst temperature, below 400°F for example. Startup of the methanation reactor generally involves pretreatment operation which can cause transient releases as discussed in Section 8.2 on startup, while Section 8.3 covers considerations related to shutdown of the facilities.

The large heat release of the methanation reaction is used to make steam by recirculating gas through waste heat boilers. Pressure on the gas side is usually higher than the pressure of steam generated; consequently any leakage in the exchanger will add gas to the steam system rather than vice versa. This gas leakage must then be removed from the steam, and shows up as purge gas on steam condensers. For

example when the steam is used to drive a condensing turbine, there is also a vacuum pump to remove non-condensible gases from the steam condenser. The latter gases are pumped for release to the atmosphere, some times without cleanup or incineration. Clearly, such purges of "non-condensible" gases can constitute undesirable emissions and should be reviewed to see whether incineration or some other cleanup is needed. Certainly in the case of tube failure a considerable amount of carbon monoxide and other combustible gases could get into the steam system from which they would be rejected to the atmosphere.

Methanation forms water which is recovered and used for makeup. As shown in Figures 8.1 and 8.2 for SNG manufacture, this can amount to about 3000 tons/day. It is clean condensate, although dissolved gases will be released when it is depressured so these gases should be collected and may be sent to the fuel system. The gas still contains moisture which must be removed to meet pipeline specifications. Glycol drying is commonly used, although other liquid or solid dessicants may be used instead. The dessicant is regenerated by stripping or heating, releasing water vapor which may be vented to the atmosphere. If upsets occur, there is a possibility that glycol (or other dessicant) might also be released to the atmosphere, so environmental protection should be considered.

A booster compressor is sometimes needed to raise the product gas to pipeline pressure. Leaks and failures on this equipment could cause inadvertent releases of combustible gas, or of steam in the event that steam turbine drives are used. Final cooling of the gas by cooling water or air cooling may be used, in which case leaks could introduce combustible gas into the cooling water system and cooling tower, or directly to the atmosphere.

Starting up and pretreating of the methanation catalyst have already been discussed. Upsets during operation of the unit may require repeating the pretreat operation, or even replacing the catalyst, with associated environmental concerns as described.

8.4.10 Sulfur Plant

The sulfur recovery plant is vital, in that without it, operation of the coal conversion plant must be interrupted. As shown in Figure 8.1 and 8.2 about 2500-5000 tpd of sulfur containing gases are fed to the Claus plant, including perhaps 400 tpd of sulfur of which roughly 99% is probably recovered. For reliability, the sulfur plant consist of multiple units with excess combined capacity. Thus, some designs include 3 units each having 50% of base capacity, or two units of 75% capacity each. Since it is not possible to startup a sulfur plant instantaneously they must all be on stream all of the time, but running at part load. Then sudden changes in feed gas rate can be accomodated quickly.

Changes in composition of the feed gas can also cause upsets on the sulfur plant. It depends upon combustion of the proper fraction of feed gas to give the stoichiometric amount of SO_2 to just react completely with H_2S in the part that bypasses combustion. Hence any change

that affects combustion air requirement can cause an upset. Change in H_2S content of the feed gas could be one factor, while a sudden change in the content of hydrocarbons is another. Loss of flame, or an unstable flame, would disrupt the sulfur recovery operation.

Upsets, for example excessive hydrocarbons, can throw the product sulfur off specification, such that it cannot be sold. If this happens the sulfur must be stored until it can be disposed of. Possibly it could be worked off by feeding through the sulfur plant feed gas incinerator after steady operation has been resumed.

The sulfur pit is a potential source of obnoxious odors, and even fires. H_2S is rather soluble in molten sulfur and could be released. Standard procedures and operating techniques are available from suppliers and should be reviewed to be sure that environmental controls are satisfactory.

The sulfur plant will usually include tail gas cleanup, using one of the various processes offered. Gas volume is the same as in the Claus plant, or larger, while the sulfur entering tail gas cleanup will be perhaps 5% of that to the Claus plant. Upsets on the sulfur plant can also upset the tail gas cleanup of course, and in addition it is subject to its own upsets. Scrubbing is usually used, introducing the possibility of deactivating or contaminating the solution such that it must be removed and replaced. All chemical purges could be sent to storage from which they can be cleaned up for reuse or otherwise disposed of in an acceptable manner.

Solids may have to be disposed of periodically. Catalyst used in the Claus reaction has an estimated life of 3-5 years (82) after which it is discarded. There may also be other solids resulting from cleanout, general maintenance, or salt deposits etc., that must be disposed of without excessive pollution.

8.4.11 Oxygen Plant

As in the case of primary emissions the oxygen plant is relatively clean; no major transient emissions are likely. The major potentially adverse impact of the oxygen plant would be in the event of an unexpected shutdown that would upset the gasification part of the plant. Fortunately the service factor on oxygen production is high and the likelihood of upsets is small, although this might be offset if only one train is used for oxygen production. Liquid oxygen storage equivalent to say 8 hours requirement is often provided to assure smooth operations.

Oxygen consumption for gasification is typically about 5000-6000 tons/day, giving a waste nitrogen stream of 15,000 to 20,000 tons/day that will be returned to the atmosphere. Transient emissions such as defrosting of exchangers, etc., should not present environmental problems.

8.4.12 Solids Disposal

For the large gasification plants being considered, ash from the gasifier to be disposed of may be 1000 tons/day on bituminous coal, or perhaps 3000 tons/day when feeding lignite. In addition, ash from coal used in the utility boiler and for plant fuel can add about 200-500 tons/day. Handling losses amounting to a fraction of 1% could be excessive. Spills, dusting, accumulation in tanks and ponds, etc. could total 1000 tons/year, so a program of cleanup and disposal should be part of the planning. Ash quenching can generate odors that may have to be contained, for example, calcium sulfide in the ash tends to react with moisture and CO_2 in the atmosphere to release H_2S. Also, if not contained, quenching could release clouds of steam, particularly if upsets result in insufficient quench water, amounting to an estimated 15 MM scfd of steam.

Leaching of ash, refuse from coal cleaning, sludge and other solid wastes could cause transient releases, for example in case of a storm or due to a spring thaw. Overflow or draining of retention ponds could give large temporary effluents. Other upsets might discharge sour water (amounting to 16,000 tons/day for example) if waste water treating is disrupted. Even though the water may have been processed in the sour water stripper it will have a strong odor and could contain large amounts of soluble salts, such as ammonium chloride.

Filter cake may be an oily waste from liquefaction processes. Usually it can be disposed of by gasification or incineration, but in case of upsets it may present a disposal problem. The slurry to be filtered is made up of very heavy oil or tar, so if it cools off or is spilled a difficult cleanup situation is faced. Again, satisfactory plans must be developed ahead of time. Oily waste from tank cleanings etc. presents somewhat similar problems, and fluid bed incineration would appear to be one good approach.

8.4.13 Water Treating

In general, the water systems on a plant will include process and sour water cleanup, a cooling water circuit, makeup water treating, collection of storm runoff, and a recirculating water system for coal cleaning where this step is included. Facilities can include ponds, an oil separator, cooling tower, exchangers, pumps, etc. all of which are subject to upsets in more ways than can be predicted, resulting in the release of transients. Chemicals are used in most of the water systems, such as chlorine, chromates, sulfuric acid, and caustic; consequently, they may appear as transient effluents, especially during operating upsets.

It is sometimes proposed to add treated sanitary waste to the cooling tower as makeup, although fouling problems may be thereby aggravated. In a typical design this could contribute 10-15% of total makeup water to the plant; however, the drift loss and spray from the cooling tower should be considered in that contamination could result, at least at times.

One pertinent study showed significant entrainment of water containing microorganisms when air was passed through a simulated cooling tower (83), suggesting that extensive pretreatment of sanitary waste may be needed if such use is contemplated. In some cases effluent from a municipal sewage treating plant has been used for industrial plant makeup water, so progress has been made in solving the attendant problems (84). However, the environmental factors may not have been adequately addressed.

The various water systems in the plant are closely interrelated, and an upset in one can affect the others to cause transient effluents. Thus, sour water is usually cleaned up to reuse as cooling tower makeup, so failure of the stripper could allow excessive amounts of H_2S, NH_3, etc. to be introduced to the cooling tower, causing serious emissions. Instrumentation to monitor the quality of makeup water going to the cooling water system may give the desired protection, with provision for diverting unsatisfactory water to covered storage. The water systems are discussed below with respect to transient emissions, covering the areas: waste water treatment, cooling water system, and makeup water treating.

Waste Water Treatment

The usual steps in industrial waste water treatment are:

- solids separation
- extraction of phenols
- sour water stripping
- oil removal
- biological oxidation
- filtration
- activated carbon if needed

All of these could contribute occasional or inadvertent emissions. Residual ash and solids scrubbed from the gas are separated in a clarifier or filter for disposal. Mal-operation may increase the amount of solids (e.g., plugging of dipleg on cyclone separator downstream of gasifier) and result in overloading or plugging of the solids separation facilities in waste water treatment. These solids may have to be flushed to storage, possibly to a pond if there is no problem due to odors or vapors. However, there is also a question on trace elements since many are appreciably volatile in gasification. Some, such as fumes of arsenic or lead may appear in the scrubbing water, or be associated with the ash fines and be susceptible to leaching when the ash is diposed of. The large amounts of trace elements that might be carried out of the gasifier with the raw gas are defined in the individual process reports. Spills of wet ash could lead to a dust nuisance when they dry out, and, therefore should be cleaned up promptly.

Extraction of phenols is the next step in waste water treatment except for those processes that do not make substantial amounts of phenols. Solubility of cresols and phenols in water may be 2-8 wt. %, and both low temperature gasification and liquefaction form considerable amounts of them. For example a design using Lurgi gasifiers shows 120 tons/day

of crude phenols produced. If an upset in the extraction plant results in an abnormally high phenol content in the water going to biological oxidation, there could be a similar surge in phenol content of the water effluent which might then contaminate sources of drinking water. A level of only .001 mg/l causes objectionable taste, while even .0001 mg/l leads to off-flavor in fish (85). Chemicals used for extraction of phenol may also contribute to transient emissions.

Sour water stripping to remove NH_3 and H_2S from the waste water is a vital part of water treatment, and any departure from its normal performance could disrupt or overload subsequent water treating operations. Stripping is subject to the usual types of equipment failures, or to interruption of electrical power or steam, but is also liable to plugging of critical exchangers due to salts such as ammonium carbonate, etc. Furthermore, changes in the feed stream could decrease cleanup efficiency temporarily. In some large plant design studies it has been considered desirable to include 100% spare facilities for sour water stripping. that is, two independent trains each of which can handle the full design flow rate (86).

If sour water stripping were ineffective for some reason, such as steam failure, then the effluent could approach feed water composition. As reported for the Synthane process (4), sour water from the gasification typically may contain 5,000-11,000 mg/l of phenol. Because of the high level of contaminants it appears prudent to provide some closed storage for sour water to handle any surges in feed, or to temporarily retain off-specification water leaving the stripper so that it can be reprocessed and not allowed to become a transient effluent. Flow rate of sour water may be 16,000 tons/day (see Figure 8.1) which is very large, but storage equivalent to several hours to 1 day should be feasible, and useful during startup or shutdown of the plant.

It will be seen that there is a definite possibility of contaminated water being released to holding ponds in the water treatment system, giving rise to strong odors or evaporation of oil and other compounds. Therefore, the operations should be followed closely to protect against serious emissions from ponds or other areas, using continuous monitoring instruments where appropriate. Ammonia is often recovered as a byproduct and could contribute to emissions, but these can be controlled using facilities and operating procedures that are well established.

After sour water stripping the waste water is processed to separate oil, using for example an API separator followed by froth flotation. At times, oil vapors and other contaminants can be released, e.g., on hot windy days or if the water entering becomes too warm. A common practice now is to cover or enclose these facilities to control emissions.

Since biological oxidation is generally depended upon to clean up many minor contaminants in waste water, any upset could result in transient releases. Changes in entering composition, concentration, temperature, etc., are known to be detrimental (37) so some surge capacity is often provided on the feed to help maintain uniform conditions.

A proper balance of nutrients is needed for reasonably completed consumption of all components, and in some cases specific nutrients such as phosphate have to be added to balance high nitrogen entering. Careful monitoring and control may be needed (88).

The bioculture can be inhibited or killed by poisons such as chlorine and chromates which are frequently added to the cooling water circuit to control biofouling and corrosion, again introducing potential for upsets. The bioculture is associated with "activated sludge" retained in the biox system, and if it dies due to lack of food or from poisons the system can easily become anaerobic and generate very obnoxious sulfur and other type odors. Education and training of personnel plus close attention to operations is perhaps the best practical answer. A holding pond following biox is also desirable, and protects against suspended solids in the effluent in the event that the activated sludge becomes difficult to separate for recycle. Disposal of sludge requires attention as discussed in Section 8.4.12.

Sometimes a separate filtration step is included to remove particulates or any residue of sludge which would contribute BOD. Sand filters may be used, with periodic back flushing to return the solids to waste water treating, to incineration or to other disposal so as to control emissions. Activated carbon may be used for final polishing, in which case it is regenerated intermittently by stripping with hot combustion gases. This regeneration gas effluent should then be incinerated, of course, to destroy desorbed materials and any carbon dust.

Other possible transient sources of waste water to consider will include storm runoff. Initially, say during the first hour of a storm, most of the oil and dirt may be washed from the area giving contaminated water. Subsequent runoff should be relatively clean and useful as makeup without extensive treatment.

Pretreating of the coal to destroy caking properties is used in some operations, and can result in considerable sour water to be treated as mentioned in Section 8.4.3. Also coal cleaning to decrease ash and pyrites may be included at the coal conversion location, in which case there is an additional large water stream to be treated. Most of the water is cleaned up for reuse in washing, screening, or other operations, but after settling and clarifying the water, it still contains very fine particulates which are removed in a settling pond. Leaching is also of concern in coal cleaning operations and on ash from conversion or furnaces. These few examples will illustrate the broad approach that is needed in considering environmental controls on waste water cleanup.

Certain other items in water treating should be commented on, particularly those operations where chemicals are consumed. An example of typical consumption of chemicals for a projected gasification plant is given in Table 8.5. In treating makeup water, chemicals are used to precipitate hardneness, while sulfuric acid, caustic, and salt may be

Table 8.5

Typical Catalyst and Chemicals Consumption in a Liquefaction Process

(Based on Ref. 42)

Item	Amount
Diatomaceous Earth Filter Precoat	20 tons/day
Monoethanolamine	3750 to 12,600
Cellulose, Asbestors, and Diatomaceous Earth	22 to 110 lb/day
Corrosion Inhibitor, A	3-1/4 to 6-1/2 gal/day
Antifoam	7-1/2 to 16 gal/day
Hydrogenation Catalyst	255,700 lb (3-yr life)
Sodium Hydroxide	340 lb/day
Active Carbon	50 to 100 lb/day
CO Shift Catalyst	2399 ft^3 (1-yr life)
Benfield Solution - K_2CO_3	986 lb/month
DEA	99 lb/month
V_2O_5	17 lb/month
Methanator Catalyst	140 ft^3 (3-yr life)
Zinc Oxide Pellets	71 ft^3 (3-yr life)
BSRP CoMo Catalyst	750 ft^3 (3-yr life)
Sulfur Recovery Catalyst	5200 (3-yr life)
Stretford Solution Chemical Makeup	$386/day
Corrosion Inhibitor, B	319 lb/day
Polymer Dispersant	319 lb/day
Sulfuric Acid	3209 lb/day
Chlorine	1766 lb/day
Phosphate Polymer Antifoam	383 lb/day
Hydrazine (oxygen scavenger)	2.7 lb/day
Lime	2072 lb/day
Aluminum Sulfate	1295 lb/day
Caustic soda	2135 lb/day

consumed in regenerating ion exchange resins used to demineralize boiler feed water. The operations are often cyclic, generating intermittent effluents; moreover, the storage and handling of the chemicals and effluents could cause transient emissions unless care and planning are adequate. Chemical cleaning of exchangers and equipment is another source of wastes (89). As in the case of barge washing (90), washing out storage tanks adds more water to be cleaned up.

8.4.14 Steam and Power Supply

A coal conversion plant requires steam and electric power which are usually supplied from a utilities section of the plant although there may be an emergency power tie-in with an outside supply. Fuel used for making steam may be clean low Btu gas made from coal, or the coal may be burned directly and stack gas cleanup used to control pollution. In the first case many of the concerns on transient emissions are transferred to the gasification operation which manufactures the low Btu gas. The second case combines the concerns of a coal fired boiler plus stack gas cleanup.

Combustion of coal necessarily produces ash refuse which calls for protection against transient emissions. Great care is needed in handling, storage and disposal to control dust, odors, or contribution of suspended solids in water streams. Leaching of trace elements from the ash is also of concern, and while some work has been done in this area (91), a great deal more is needed as has been pointed out earlier in this report.

Ash causes fouling of heat transfer surfaces in coal fired boilers, and cleaning is accomplished by "soot blowing" using a high velocity steam jet to blow deposits off the tubes. Soot blowing is done on stream, without interrupting the operation, consequently the disloged dust is dispersed in the flowing gas and carried down stream where it appears as a surge in dust content (92). The gas is usually passed through an electrostatic precipitator, which gives reasonably good cleanup of dust. Incidentally, the dust from soot blowing would be expected to have an unusually high content of relatively volatile and toxic trace elements. Where stack gas scrubbing is used for cleanup, backup dust control is thereby provided.

In an electrostatic precipitator the dust deposits on collection plates which are cleaned periodically by rapping (e.g., 2-10 minute cycles). While most of the dislodged dust falls into a hopper and is recovered, there is some increase in dust loss due to rapping. Consideration has been given to the interaction between soot blowing cycles, rapping cycles, etc. on dust loss (92). (This reference also presents operating experience on a large power plant.) In the past, occasions have arisen where particulates formed loose deposits in a stack, accumulated sulfuric acid and other contaminants, and then sometimes became dislodged, to blow out through the stack and fall in nearby areas as smut. The situation can and should be prevented. The explanation of deposition is related to condensation on the walls due to cooling. Dew point of flue gases is raised very considerably over the water dew point by the presence of

only minor amounts of SO_3 which forms sulfuric acid. This phenomenon is well known in connection with corrosion of heat exchangers used for low temperature heat recovery on furnaces and boilers. Acid dew points of 320°F are common for flue gases from high sulfur fuels, whereas the dew point predicted from water vapor content alone may be only 120-130°F. In the stack, wall temperatures are cooler than the flue gases due to heat loss so significant condensation can result, for example in the range of 200-300°F. Furthermore, the concentration of sulfuric acid in the condensed liquid is surprisingly high. At a dew point of 200°F the equilibrium concentration of sulfuric acid is 65%, while at 300°F it is 83% for typical flue gases. A solution to the problem is simply to prevent possible condensation by maintaining all surface temperature above the acid dew point, using adequate insulation or other means.

Tube failure in the furnace can upset combustion and give severe smoke and dust in the furnace effluent. One possible approach is to be prepared to isolate and shut off the section of tubes involved as fast as possible.

Stack gas cleanup is perhaps the most critical part of the utilities system with regard to potential transient emission of pollutants, especially of dust, smoke, and sulfur. If it fails to operate properly for any reason, emissions become excessive and the boiler may have to be shut down unless a clean fuel can be substituted immediately. Perhaps a standby system to fire oil fuel could be used, and it would also be useful for startups. Otherwise, parallel trains might be considered with stack gas cleanup facilities, which may be convenient when the design provides, for example 3 boilers, each with a stack gas cleanup system and each supplying 50% of design requirement and all three intended to be operating at all times.

Stack gas cleanup often involves the use of chemicals, and usually with a sizeable consumption of them. Moreover it necessarily generates byproduct sulfur or sulfur compounds such as H_2S or gypsum. Again, there are concerns about inadvertent handling losses on chemicals, as well as possible intermittent purges of solution needed to maintain scrubbing capacity. Plans are needed for containing and disposing of such materials. Incineration of these materials may be an acceptable means of disposal.

One comment on boilers that may affect transients is that some state codes require that boilers be shut down for inspection at stated intervals. Thus, the quantity of transients is increased.

Electric power for the plant will usually be supplied from a generator driven by a condensing steam turbine. Heat from the condenser is dissipated to cooling water or by air cooling. As mentioned earlier, vacuum on the condenser (of 2-4 in. mercury absolute) is maintained by a pump that removes non-condensible gases and rejects them to the atmosphere. Thus, any gases that get into the steam system can become emissions at this point and may require controls.

It should be emphasized that extremely high reliability is needed on the power supply, since without it the plant will have to shutdown and may have serious transient emissions. One example is loss of power on an electrostatic precipitator. Extra efforts should be made to protect against interruption of electric supply to essential facilities, by using tie-ins to other sources, emergency generators, spares driven by steam turbines, etc.

8.5 Maintenance

Maintenance on the plant covers repairs, cleaning, additions, and general servicing of facilities. There are several categories of work including unscheduled or emergency repairs due to failure of pumps, heat transfer surfaces, etc. A second category is routine maintenance during turnarounds to inspect and recondition equipment as needed. A third type of maintenance is "preventive," such as scheduled servicing of seals, pumps, exchangers, etc. to replace worn parts and prevent upsets or leaks before they occur. This is somewhat like the normal oil-change or tune-up on an automobile. In a fourth group is "predictive" maintenance which is now becoming possible as a result of progress and sophistication in instrumentation and computer applications (93). It will be seen that the degree of concern on transient emissions is very directly related to the overall philosophy and planning on maintenance. Environmental aspects improve as the maintenance program proceeds in the direction of the third and fourth categories discussed above.

Before general maintenance is started on equipment, the plant will have been depressured and purged. Liquid and solids inventories will have been removed to the extent possible and sent to storage. Opening the equipment at this point should not cause serious emissions, although spills can be expected and will need to be cleaned up. Some parts of the system will then be flushed with oil or water to remove tar, sour water, dust, etc. The liquid used for washing should be contained and cleaned up, while the contaminants in it should be separated for disposal.

Cleaning is a necessary part of the procedure to remove solids deposits in vessels, piping, heat exchanger and the like. One method of cleaning uses a blast of air, containing sand or shot. Other methods use a high pressure water jet, or strong chemicals. Regardless of the method, precautions are needed to avoid transient releases of the deposits being removed, or the materials used in the cleaning operation. In some cases, the presence of toxic trace elements may require special consideration. Many such elements are partially volatile at gasification conditions (e.g., arsenic, lead, cadmium etc.) and are expected to deposit on surfaces downstream as the gas is cooled. Protection of personnel is needed in addition to plans for safe disposal of such trace elements. Additionally, consideration should be given to all chemicals and materials used in maintenance, as well as chemicals or residues that are used in the plant or that might remain in the unit at shutdown. The latter may include carcinogenic tar, chemical solutions in the acid gas removal system and on stack gas or Claus plant tail gas cleanup, or sour water. Plans should provide for collecting, storing, and disposing of all such miscellaneous wastes.

During the shutdown, various catalysts used in the process may be regenerated, screened to remove fines, or replaced. Dusting and emissions need to be controlled. Also, catalyst (e.g., methanation) or some deposits may be pyrophoric, requiring suitable precautions. Noise during a turnaround may be sufficient to be objectionable or even harmful, depending upon the situation. Truck traffic and the high level of activity can also cause problems but can be allieviated by prior consideration.

8.6 Chemicals and Catalyst Replacement

As previously mentioned, various chemicals and catalysts are used by the plant for acid gas removal or other scrubbing systems and in water treating, etc. In addition, catalysts are used for shifting, as sulfur guards, in methanation, the sulfur plant, etc. All of these chemicals and catalysts require environmentally sound storage and handling as well as provision for satisfactory disposal of spent materials. An illustration of chemicals consumed in coal conversion is shown in Table 8.5 for the SRC process.

Water gas shift catalyst may be regenerated and screened at intervals to remove deposits and fines which cause high pressure drop in fixed beds. It is estimated that the operation may take up to 5 days. The pyrophoric potential of this catalyst should be taken into account. Acid gas removal has a chemicals makeup that is sometimes taken care of by removing part of the inventory and replacing it with fresh solution. Disposal of the purge will have to be tailored to the specific chemical composition. In some cases it can be completely destroyed by incineration, while in other cases the presence of heavy metals (vanadium) or toxic elements (arsenic) will complicate the situation.

Replacement of zinc oxide guard ahead of the methanator will be needed perhaps 2-3 times a year, at which time the spent catalyst might be returned to a manufacturer for reprocessing. Methanation catalyst may have a life of a year or more but may lose activity and have to be replaced sooner. Again, the catalyst may be pyrophoric and in addition toxic carbonyls may be present. Standards for personnel protection may require respirators and other suitable precautions.

In those plants that include hydrotreating of liquid products or byproducts, the catalyst may be either nickel based or cobalt-molybdenum. Precautions for working with these and other catalyst are available from various manufacturers (66).

Hydrogen manufacture is needed in the liquefaction processes, and uses process steps very similar to gasification to make SNG, although the shifting and acid gas removal are intensified. Transient considerations are similar to those described for gasification. In addition, soot may be formed if partial oxidation of solids or heavy oil is used. While this is normally recycled to gasification and converted, it does represent an additional material that could lead to transient emissions.

Water treating uses many chemicals that require precautions as covered briefly at the beginning of this section. One other aspect should be mentioned, that is, the possible effect of corrosion of heat exchangers in cooling water services. Surface area may easily exceed 100,000 sq. ft. and at a modest corrosion rate of 1 mil/year, and with copper tubes this could introduce 5600 lb/year of copper into the cooling water circuit.

8.7 Storage of Products and Byproducts

Storage and handling of liquids and solids are well known sources of transient emissions, for example in oil refining and chemicals manufacture these can be the largest single source of emissions (69). Suitable precautions have been developed to control tank breathing and filling losses, as well as in product handling and shipping, and these are especially pertinent on coal liquefaction plants. Similarly, precautions are available for ammonia, sulfur, phenols and specific chemicals and should be followed when applicable. Storage of molten sulfur, for example, introduces the possibility of H_2S release or fires.

8.8 Design Considerations

Most transient emissions can be attributed to upsets, startup, shutdown, or other interruptions; therefore design features that improve reliability and service factor will generally be environmentally desirable. A basic consideration is the number of equipment trains to use. Gasifiers that are currently in commercial use have a limited capacity, less than 1000 tons/day of coal, so 30 units may be needed for a large plant. Service factors may be 85-90%, and provision is needed to allow shuting down any one unit for maintenance without disrupting the rest of the plant. Frequently the gasifiers will be grouped to feed two separate and independent trains of gas cleanup facilities. Similarly, parallel trains are used in other areas of the plant as illustrated in Table 8.6. For some gasification and liquefaction processes under development the use of only two reactors is projected for a large plant (94).

The order of starting up and shutting down individual sections of the process can affect emissions, as discussed. In general, stopping the flow of coal and oxygen to the gasifier will be a first step at shutdown, while environmental controls such as acid gas removal and the sulfur plant will be the last to be shutdown, along with the utilities system. Automatic shutdown of individual systems or pieces of equipment will be provided by "fail-safe" instrumentation. Again, preplanning can minimize adverse environmental effects by assuring that proper facilities are available when needed.

Blowdown and vent streams can often be sent to a common collection system where any condensible liquids will be recovered. The remaining gas will be incinerated, or where appropriate, it can be burned in a furnace to recover heating value. Streams released from pressure relief valves can often be handled in the same or a similar system, as well as vents from lock hoppers, vacuum systems, etc.

Table 8.6

Example of Number of Trains and Spares Proposed for Large Scale Gasification Plant

930 MM scfd of 215 Btu/scf gas from 10,000 tpd Illinois coal (From Ref. 95)

	Operating/Spare
Air Compression	4/1
Air Separation	4/0
Oxygen Compression	4/0
Gasification	4/1
Particulate Removal and Gas Cooling	
Bulk Particulate Removal	4/1
High Temperature Cooling	4/1
Low Temperature Cooling	4/1
Acid Gas Removal	4/0
Expansion	4/0
Power Generation	1/0
Sulfur Recovery	2/1
Tail Gas Treating	2/1
Water Treating	1/0
Cooling Water System	1/0
Process Condensate Treating	1/0

Consideration should be given to having a supply of low sulfur fuel oil available for use as backup, in case of failures on cleanup systems used on furnaces that normally burn dirty fuel.

Mechanical seals on pumps, although more costly than simple packing, will minimize leaks. Blowback of gas, oil, etc. through the seal may also be used to prevent leakage, or a collection jacket could be used.

Areas of the plant where spills of oil, coal, ash, etc., are most likely should be identified and probably should be confined by curbing or wells so that any spills are contained and can be cleaned up. Vacuum cleanup truck and flushing facilities should be available where needed. A separate oily water system, such as those used in oil refineries usually should be provided. Protection against vapor emissions at sewer connections and junction boxes is sometimes needed. A separate storm sewer system and retention pond can be used to recover clean water from rain run-off. However, experience shows that the initial part of such run-off may be oily and contaminated so it should be diverted to the oily water sewer.

Protection against emissions from all storage and handling areas should be reviewed to be sure that it is adequate. Storage for "off-specification" production should be available so that it can be recovered and used rather than sent to waste disposal.

In designing a plant it should be recognized that all chemicals and material entering the plant must also leave in some form since they do not simply disappear. This includes dissolved solids in makeup water for example. It also applies to trace elements entering with the feed coal, some of which may accumulate as deposits on equipment and have to be removed by cleaning. Toxic elements such as arsenic, lead, etc., will require precautions and special consideration. If there is major uncertainty as to where the toxic elements will appear, and in what form, then it necessarily follows that there must be a corresponding uncertainty as to whether environmental controls are adequate.

Elements such as chlorine in the coal can form HCl during gasification or liquefaction which will appear in the downstream recovery system. It is not clear in what form it will ultimately leave the system, or whether pH control will be needed. One concern is that chlorides can cause stress corrosion cracking of alloy steels used for fabrication, resulting in tube failure or leaks that would be environmentally undesirable.

One of the most effective means for controlling transient emissions is to guard against failures and to be ready for fast response if they do occur. This calls for a thorough and effective program of monitoring inspection, and maintenance. Likewise, an intensive and recurring program to educate and train personnel can reduce losses, conserve resources, and protect the environment.

9. BIBLIOGRAPHY

(1) Magee, E. M., Hall, H. J. and Varga, G. M., Jr., "Potential Pollutants in Fossil Fuels," EPA-R2-73-249, June 1975. NTIS PB-225 039.

(2) Hall, H. J., Varga, G. M., Jr. and Magee, E. M., "Symposium Proceedings: Environmental Aspects of Fuel Conversion Technology," St. Louis, Missouri, May 1974, EPA-650/2-74-118, pp. 35-47.

(3) Magee, E. M., Jahnig, C. E. and Shaw, H., "Evaluation of Pollution Control in Fossil Fuel Conversion Processes, Gasification; Section 1: Koppers-Totzek Process," EPA-650/2-74-009a, January 1974. NTIS PB-231 675.

(4) Kalfadelis, C. D. and Magee, E. M., "Evaluation of Pollution Control in Fossil Fuel Conversion Processes, Gasification; Section 2: Synthane Process," EPA-650/2-74-009b, June 1974. NTIS PB-237 113.

(5) Shaw, H. and Magee, E. M., "Evaluation of Pollution Control in Fossil Fuel Conversion Processes, Gasification; Section 3: Lurgi Process," EPA-650/2-74-009c, July 1974. NTIS PB-237 694.

(6) Jahnig, C. E. and Magee, E. M., "Evaluation of Pollution Control in Fossil Fuel Conversion Processes, Gasification; Section 4: CO_2 Acceptor Process," EPA-650/2-74-009d, December 1974. NTIS PB-241 141.

(7) Jahnig, C. E., "Evaluation of Pollution Control in Fossil Fuel Conversion Processes, Gasification; Section 5: BIGAS Process," EPA-650/2-74-009g, May 1975. NTIS PB-243 694.

(8) Jahnig, C. E., "Evaluation of Pollution Control in Fossil Fuel Conversion Processes, Gasification; Section 6: HYGAS Process," EPA-650/2-74-009h, August 1975.

(9) Jahnig, C. E., "Evaluation of Pollution Control in Fossil Fuel Conversion Processes, Gasification; Section 7: U-Gas Process," EPA-650/2-74-009i, August 1975.

(10) Jahnig, C. E., "Evaluation of Pollution Control in Fossil Fuel Conversion Processes, Gasification; Section 8: Winkler Process," EPA-650/2-74-009j, September 1975.

(11) Jahnig, C. E., Magee, E. M. and Kalfadelis C. D., "Symposium Proceedings: Environmental Aspects of Fuel Conversion Technology," St. Louis, Missouri, May 1974, EPA-650/2-74-118, p. 197-201.

(12) Bertrand, R. R. and Jahnig, C. E., "A Look at Environmental Aspects of Coal Conversion," presented at the American Chemical Society Meeting, Philadelphia, Pennsylvania, April 1975.

(13) Jahnig, C. E. and Bertrand, R. R., "Environmental Aspects of Coal Gasification," presented at the Institute of Chemical Engineers Meeting, Boston, Massachusetts, September 1975.

(14) Lowry, H. H., Ed., "Chemistry of Coal Utilization-Supplementary Volume," John Wiley and Sons, New York, 1963.

(15) Ohio State University, "Acid Mine Drainage Formation and Abatement," for EPA, April 1971. NTIS PB-199 835.

(16) Truax-Traer Coal Company, "Control of Mine Drainage from Coal Mine Mineral Waste," EPA Report No. 14010 DDN, August 1971. NTIS PB-208 326.

(17) Farnsworth, J. F., Mitsak, D. M. and Kamody, J. F., "Symposium Proceedings: Environmental Aspects of Fuel Conversion Technology," St. Louis, Missouri, May 1974, EPA-650/2-74-118, pp. 115-130.

(18) Parrish, R. W. and Neilson, H. B., "Synthesis Gas Purification Including Removal of Trace Contaminants by the BENFIELD Process," presented at Division of Industrial and Engineering Chemistry, ACS Meeting, Los Angeles, March-April 1974.

(19) Katell, S. and Faber, J. H., Pet. Ref., March 1960, p. 187-190.

(20) Ranke, G., Chemical Economy and Engineering Review, 4, (J) (49), 25-31, May 1972.

(21) Anon, "El Paso Natural Gas Company Burnham Coal Gasification Complex-Plant Description and Cost Estimate," prepared by Stearns-Roger, Inc., August 16, 1972 (Rev. 9/20/72). Application of El Paso Natural Gas Company before U.S. Power Commission, Docket No. CP 73-131, November 15, 1972 (Rev. Oct. 1973).

(22) Sweny, J. W., "Synthetic Fuel Gas Purification by the Selexol Process," ACS Div. of Fuel Chem., Preprints, 18, (2), 142-156 (1973).

(23) Anon, "The Selexol Process for Acid Gas Removal," Bulletin #273, Allied Chemical Corp.

(24) Anon, Hydrocarbon Proc., 79-138, April 1975.

(25) Estep, J. W., et al, "The Recovery of Sulfur from Sour Natural and Refinery Gases," in Advances in Petroleum Chemistry and Refining, J. J. McKetta, Jr., Ed., Vol. 6, p. 315-466, Interscience Pub., 1962.

(26) Riesenfeld, F. C. and Kohl, A. L., "Gas Purification, 2nd Edition" Gulf Publishing Co., Houston, 1974.

(27) Updegraff, N. C. and Reed, R. M., Pet. Engineer, September 1954, p. C-57-C-63.

(28) Allen, D. W. and Yen, W. H., Chem. Eng. Prog., 69, (1), 75-79, January 1973.

(29) Latimer, R. E., Chem. Eng. Prog., 63, No. 2, 35-59, 1967.

(30) Gamson, B. W. and Elkins, R. H., Chemical Eng. Prog., 49, No. 4, 1953, pp. 203-215.

(31) Goar, G., Hydrocarbon Proc., 47, No. 9, 1968, pp. 248-252.

(32) Ludberg, J. E., "Removal of Hydrogen Sulphide from Coke Oven Gas by the Stretford Process," 64th Annual Meeting of the Air Pollution Control Association, June-July 1971.

(33) Moyes, A. J. and Wilkinson, J. S., The Chemical Engineer, February 1974, pp. 84-90.

(34) Elwood, P., Chemical Engineering, July 20, 1964, pp. 128-130.

(35) Beychok, M. R., "Aqueous Wastes from Petroleum and Petrochemical Plants," John Wiley and Sons, New York, 1973.

(36) Metcalf and Eddy, Inc., "Wastewater Engineering," McGraw-Hill, New York, 1972.

(37) Kostenbader, P. D., and Flecksteiner, J. W., Journal WPCF, 41, No. 2, Part 1 pp. 199-207, February 1969.

(38) Magee, E. M. and Shaw, H., "Symposium Proceedings: Environmental Aspects of Fuel Conversion Technology," St. Louis, Missouri, May 1974, EPA-650/2-74-118, pp. 309-313.

(39) Thibodeaux, L. J. and Parker, D. G., "Desorption Limits of Selected Industrial Gases and Liquids from Aerated Basins," Paper No. 30D, AIChE Meeting, Tulsa, Oklahoma, March 1974.

(40) Peoples, R. F., Krishnan, P. and Simonsen, R. N., Journal WPCF, 44, No. 11, 2120-2128, November 1972.

(41) Kalfadelis, C. D. and Magee, E. M., "Evaluation of Pollution Control in Fossil Fuel Conversion Processes, Liquefaction; Section 1: COED Process," EPA-650/2-74-009e, January 1975. NTIS PB-240 372.

(42) Jahnig, C. E. and Magee, E. M., "Evaluation of Pollution Control in Fossil Fuel Conversion Processes, Liquefaction; Section 2: SRC Process," EPA-650/2-74-009f, March 1975. NTIS PB-241 792.

(43) Jahnig, C. E., "Evaluation of Pollution Control in Fossil Fuel Conversion Processes, Liquefaction; Section 3: H-Coal Process," EPA-650/2-74-009m, October 1975.

(44) Magee, E. M., "Evaluation of Pollution Control in Fossil Fuel Conversion Processes, Coal Treatment; Section 1: Meyers Process," EPA-650/2-74-009k, September 1975.

(45) Schultz, Hyman, et al, "The Fate of Some Trace Elements During Coal Pretreatment and Combustion," ACS Div. of Fuel Chem., 8, (4), p. 108, August 1973.

(46) Klein, D. H., et al, "Pathways of Thirty-seven Trace Elements Through Coal-Fired Power Plant," Environmental Sci. and Tech., 9, No. 10, 1975, p. 973-979.

(47) Kaakien, J. W., et al, "Trace Element Behavior in Coal-Fired Power Plant," Environmental Science and Technology, 9, (9), pp. 862-869, 1975.

(48) Andren, A. W. and Klein, D. H., "Selenium in Coal-Fired Steam Plant Emission," Environmental Science and Technology, 9, (9), pp. 856-858, 1973.

(49) Billings, C. E., et al, "Mercury Balance on a Large Pulverized Coal-Fired Furnace," J. Air Poll. Control Association, 23, (9), p. 773, 1973.

(50) Attari, A., "The Fate of Trace Constituents of Coal During Gasification," EPA-650/2-73-004, August 1973.

(51) Forney, A. J., et al, "Trace Element and Major Component Balances Around the Synthane PDU Gasifier," Pittsburgh Energy Research Center, Report No. PERC/TPR-75/1, August 1975.

(52) Forney, A. J., et al, "Analyses of Tars, Chars, Gases, and Water Found in Effluents from the Synthane Process," Bureau of Mines Applications of Improved Technology to Provide Clean Energy Programs, Tech. Prog. Report 76, January 1974.

(53) Kalfadelis, C. D., et al, "Evaluation of Pollution Control in Fossil Fuel Conversion Processes; Analytical Test Plan," EPA-650/2-74-009-1, October 1975.

(54) "Char Oil Energy Development," Office of Coal Research, R&D Report No. 73 - Interim Report No. 2, GPO Cat. No. I63.10:73/Int. 2, July 1974.

(55) Forney, A. J., et al, "Symposium Proceedings: Environmental Aspects of Fuel Conversion Technology," St. Louis, Missouri, May 1974, EPA-650/2-74-118, p. 107, October 1974.

(56) Communication from the Scottish Gas Board, Westfield Works, Cardenden, Fife, Scotland, November 1974.

(57) Communication from the South African Coal, Oil, and Gas Corporation, Ltd. (SASOL), Sasolburg, South Africa, November 1974.

(58) Communication from Azot Sanayii, Kutahya, Turkey, November 1974.

(59) Shultz, F. G. and Lewis, P. S., "Hot Sulfur Removal from Producer Gas," Paper presented at the 3rd International Conference on Fluidized Bed Combustion, Hueston Woods State Park, Ohio, October 29-November 1, 1972.

(60) Squires, A. M., "Cyclic Use of Calcined Dolomite to Desulfurized Fuels Undergoing Gasification," Paper No. 14 in "Fuel Gasifications," Advances in Chemistry Series 69, ACS, Washington, D.C., 1967.

(61) Moore, R. H., et al, "A Process for Cleaning and Removal of Sulfur Compounds from Low Btu Gases," R&D Report No. 100, Interim Report No. 1, by Pacific Northwest Laboratories, Division Battelle Memorial Institute, for Office of Coal Research, August 1974.

(62) Colorado State University, "Water Pollution Potential of Spent Oil Shale Residues," for EPA, NTIS PB-206 808, December 1974.

(63) Ricketts, T. S., "Operation of the Westfield Lurgi Plant", Journal of Inst. of Gas Eng., Oct. 1967, p. 563.

(64) Goeke, E. K., "Chemical Age (India)," 25 No. 5 pp. 301-305

(65) Chemetron Corp., "Technical Data Sheets on Girdler Catalyst," G521072 and G61RS1072.

(66) Catalyst Regeneration Services Inc., "Hydrocarbon Processing," Sept. 1975 p. 319.

(67) Jones, H. R., "Pollution Control in the Petroleum Industry, ndc Manual 1973.

(68) Vanderlinde, L. G., "Smokeless Flares," Hydrocarbon Processing Oct. 1974, pp. 99-104.

(69) Congram, G. E., "Proper Maintenance Extends Pump Seal Life," Oil Gas Journal, Nov. 10, 1975, pp. 186-188.

(70) Colgate, J. L., Akers, D. J., and From, R. W., "Gob Pile Stabilization," Reclamation, and Utilization," OCR R&D Report No. 75, 1973.

(71) Lillis, E. J. and Young, D., "EPA Looks at Fugitive Emissions," JAPCA 25 No. 10, pp. 1015-1018.

(72) Story, M. J., "Proceedings of International Clean Air Conference," Rotrua, New Zealand, Feb. 17-21, 1975.

(73) Maze, R. W., "Air Cooler or Water Tower - Which for Heat Disposal?" Chemical Engineering, Jan. 6, 1975, pp. 106-114

(74) Booz Allen and Hamilton Company study for EPA, "Pollution Control in Fossil Fuel Conversion Processes," No. 9075-015, March 1974.

(75) Schora, F. C., "Analysis of the Hygas Coal Gasification Plant Design," AIChE 65th Annual Meeting, New York City, Nov. 27-30, 1972.

(76) Kavlic, V. J., Lee, B. S., "Coal Pretreatment in Fluidized Bed," American Chemical Society, Division of Fuel Chemistry, Sept. 1966.

(77) Patton, P. W. and Joyce, C. F., "How to Find the Lowest Cost Vacuum System," Chemical Engineering, Feb. 2, 1976.

(78) "Clean Boiler Fuels from Coal," R&D Report 82 Interim Report No. 1 Volume II (Figure 9), Prepared for OCR by Ralph M. Parsons Co.

(79) "Gas Processing Handbook," Hydrocarbon Processing, April 1975, pp. 79-135.

(80) McRea, D. H., "Benfield Activated Hot Potassium Carbonate Process," EPA Symposium: Environmental Aspects of Fuel Conversion Technology Hollywood, Florida, Dec. 15-18, 1975.

(81) Heisler, L., and Weiss, H., "Experience with an Austrian Gas Plant," Hydrocarbon Processing, May 1975, pp. 157-161.

(82) Pearson, M. J., "Developments in Claus Plant Catalysts," Hydrocarbon Processing, Feb. 1973, pp. 81-85.

(83) Thibodeaux, L. J., and Carter, N. J., "Coliform Emissions from Air/Water Contractors," Recent Advances in Air Pollution Control, AIChE, 1974.

(84) Donohue, J. M., and Nathan, C. C., "Unusual Problems in Cooling Water Treatment," Chem. Eng. Progress, 71 No. 7 pp. 88-96.

(85) "Cleaning Our Environment," ACS 1969, p. 148.

(86) Detman, R., "Procedures for Pricing Synthetic Pipeline Gas from Coal," Seventh Pipeline Gas Symposium, Chicago, Ill., Oct. 27-29, 1975.

(87) Workshop on Water Needs at University of Illinois, Oct. 20-22, 1974, Res. Rept. 93 dated Nov. 1974, p. 180 and reference 3.

(88) Kostenbader, P. D., and Flecksteiner, J. W., "Biological Oxidation of Coke Plant Weak Ammonia Liquor," Journal WPCF 41 No. 2 pp. 200-207.

(89) Congram, G. E., "Trim Fuel Costs in Steam Generation," Oil Gas Journal, May 5, 1975, pp. 235-237.

(90) Ball, J., Adams, D. G., and Stryker, C. A., "Management of Tank Washings in Marine and Coastal Commerce," Texas A&M University, Report TAMU-SG-74-221, Feb. 1975.

(91) Beckner, J. L., "Trace Element Composition and Disposal of Gasifier Ash," Seventh Synthetic Pipeline Gas Symposium (AGA), Chicago, Ill. Oct. 27-29, 1975.

(92) Mills, R. A., and Tassicker, O. J., "Analysis of Pilot Plant Electrostatic Precipitator Testing," International Clean Air Conference, Rotorua, New Zealand, Feb. 17-21, 1975.

(93) James, R., and Block, H. P., "Predictive Maintenance System Improved at Exxon Chemical Plant," Oil Gas Journal, Feb. 2, 1976, pp. 59-64.

(94) Bolln, J. J., "Commercial Concept Designs," Fifth Synthetic Pipeline Symposium, Chicago, Ill., Oct. 29-31, 1973.

(95) Fluor Engineers and Constructors Inc., "Economics of Air vs. O_2 Pressure Gasification of Coal," EPRI239-1, Jan. 1975, (PB 242, 595).

APPENDIX A

Process Descriptions - Gasification

APPENDIX A

PROCESS DESCRIPTIONS - GASIFICATION

In this appendix a general description is presented of the gasification processes studied. The reader is referred to the individual process reports for details.

A.1 Koppers-Totzek Process

A.1.1 General

The gasifier operates at about 2700°F and atmospheric pressure with oxygen, a small amount of steam, and a dilute suspension of powdered coal to produce synthesis gas. The product gas is high in CO and hydrogen, with negligible methane. The process is described generally in the Koppers brochures. Additional information has been obtained from the literature and by discussions with the Koppers Company. A discussion of the processing steps follows.

A.1.2 Main Gasification Stream

Figure A.1.1 is a block flow diagram of the process and auxiliary facilities. This design, based on the design supplied by the Koppers Company, feeds 6,750 T/D of bituminous coal containing 16.5% moisture, 17.3% ash, and 0.63% sulfur with a HHV of 8830 Btu/lb. The product gas, after acid gas removal, is 290 MM cfd with a HHV of 303 Btu/cf and 300 ppm sulfur. This sulfur content meets requirements but could be reduced by the use of more equipment. Most commercial applications are for making ammonia or methanol, but the gas can also be used as a clean fuel for firing ceramics, glass manufacture, etc., or for steam generation and combined cycle power plants or for upgrading to high Btu SNG; in other words the gas can be used whenever synthesis gas, fuel gas or reducing gas can be used. The process can also be used to gasify coal fines, char, hydrocarbons, or tar.

A.1.2.1 Coal Preparation

The first unit to be considered is the coal storage pile and handling facilities. This particular design does not require beneficiation of coals of 30% ash content or lower. For 30 days storage, the coal piles are about 200 feet wide, 20 feet high, and 1,000 feet long. There are two of these, with loading, unloading, and conveying equipment. These will generally be tamped down, but there can still be dusting and wind loss. Covered conveyors should be used, and other precautions included in the design to minimize dusting from stacking etc. Thorough planning is necessary to avoid possible combustion in coal storage piles etc., and to provide for extinguishing any fires that may start.

Coal drying uses a rotary drum drier fired with part of the product gas, giving a sulfur level in the off gas well below that allowable for liquid or solid fuel firing. Use of feed coal as fuel would be more

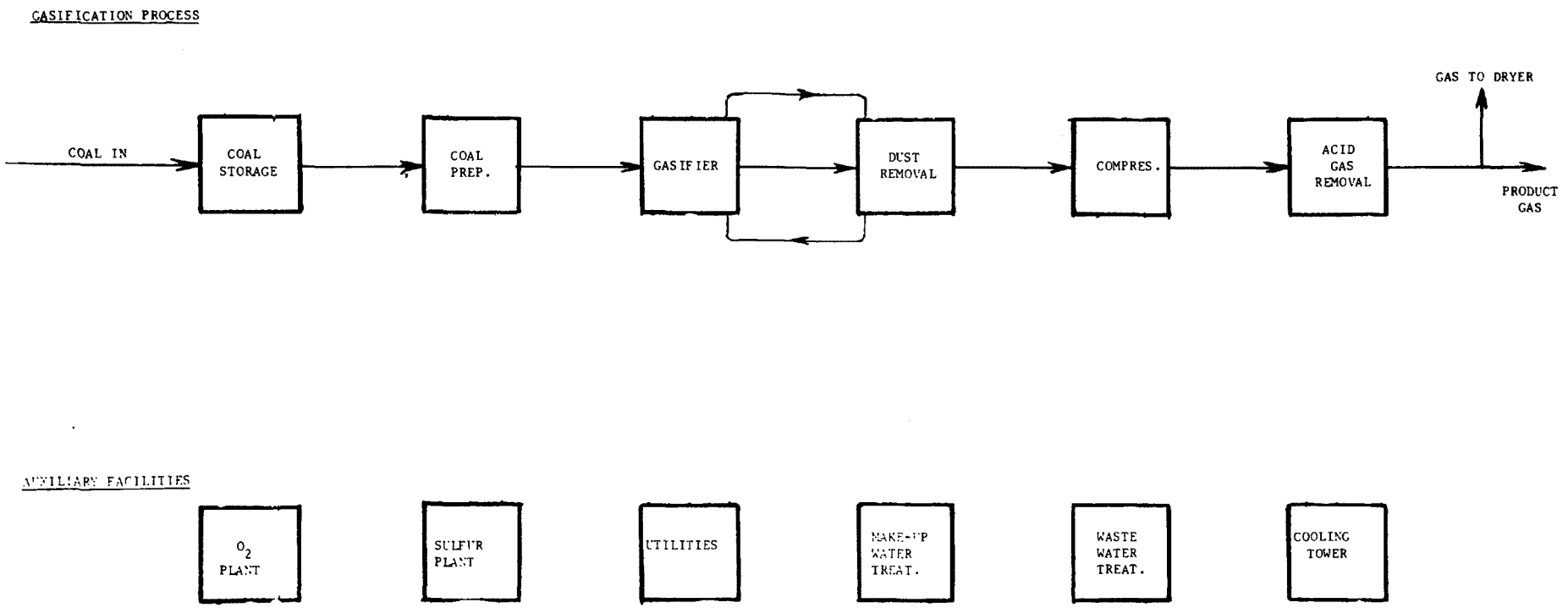

Figure A.1.1

Koppers-Totzek Gasification Process

efficient than the use of product gas but would give 1.4 lb SO_2/MM Btu compared to the allowable 1.2 lb SO_2/MM Btu. However, the major part of the fuel could be coal, supplemented by some product gas to meet sulfur emission limits. A large volume of excess air is used to bring the drying gas temperature down to less than 1000°F in order to avoid overheating the coal. Also, flue gas is recycled on the drier to hold a maximum of about 10% oxygen in the gas. The coal is not oxidized in the drying step and no tar, sulfur, or volatiles should be evolved, since the coal temperature is not over 200°F. It may be that a fluid bed drier would be more effective than the preceeding because it would allow a higher gas inlet temperature without overheating the coal. This would reduce the volume of dusty effluent gas since less excess air is needed, and the fuel efficiency would increase correspondingly. As an alternative, it might be possible to dry the coal using heat in the flue gas from the utility boiler.

The drier vent gas must be cleaned up and for this purpose an electrostatic precipitator was added to the base design. Bag filters might be used instead, but they must be kept hot enough to avoid water condensation. A water scrubber could be used, and may be preferred if odors in this vent gas are objectionable. The degree of odor control needed will depend on the type of coal and the plant location. It may be more of a problem for example on lignite, and this information should be obtained from plant or experimental operations. Even so, the gas will have a high moisture content and may form a water fog under certain atmospheric conditions. In locations where this is not acceptable, one solution is to make sure that the vent gas is above the critical temperature for fog formation.

Grinding and pneumatic transport with nitrogen are designed for completely closed gas recycle. The gas balance lines from this system (e.g. coal feed hoppers) should be vented into the dust removal system. Great care should be taken to avoid spills, overflow, leaks on seals, and the like. As a further precaution to control pollution, this entire system could be housed in a building, with positive ventilation control tied into bag filters.

Noise control may also be needed. While the building may shield the process area from undue noise of the grinding and handling operations, additional precautions may be needed from the standpoint of personnel inside the building.

A.1.2.2 Gasifier

The gasifier uses an entrained flow of coal, oxygen and steam. Coal is fed by screw feeders and is intimately mixed with steam and oxygen. The high temperature of operation causes slagging of the ash. Part of the slag exits at the bottom of the reactor and part passes overhead with the gas. The very hot gases are quenched above the reactor by a water spray before entering a waste heat boiler. Low pressure steam is produced in the gasifier jacket and high pressure steam is produced in the waste heat boiler. The gas then passes to the gas cleaning section.

A.1.2.3 Gas Cleaning

The raw product gas is cooled in a waste heat boiler and then scrubbed with water. Water from the scrubber, containing approximately half of the slag as well as dissolved H_2S etc., goes to a clarifier to remove solids and then to a cooling tower in which the air will strip out dissolved gases. If all the dissolved H_2S is stripped into the air, it will give a concentration of 1-2 vppm. While this is below the Maximum Allowable Concentration, it is far above the odor threshold and would be unacceptable. It is common to find an appreciable Biox action in the cooling water circuit, and Koppers Company experience shows that there is no odor problem, but this area needs better definition, particularly on higher sulfur coals. The problem can be avoided by using indirect cooling by cooling water or air-fins. The calculated amount of H_2S is less than 100 lbs/hr and it should be relatively easy to inactivate it by adding lime slurry, or by passing the circulating water through a bed of lump limestone. There might be sufficient alkalinity from the fraction of the slag that is carried over to do the task.

A.1.2.4 Acid Gas Removal

After compression, the gas is scrubbed with amine to remove H_2S. It is understood that Koppers Company is planning to use MDEA (methyl diethanolamine) for selective removal of H_2S; thus, a concentration of 22% H_2S passes to the Claus plant.

The final product gas after scrubbing contains 200 vppm of H_2S, as well as an estimated 100 vppm of COS. This gas is considered a relatively clean low Btu fuel. The sulfur level is too high, however, for methanation etc., to make a high Btu fuel. However, if methanation is desired other systems can be used to reduce sulfur to acceptable limits.

A.1.3 Auxiliary Facilities

In addition to the basic process, a number of auxiliary facilities are required which will now be discussed with regard to effluents to the air.

A.1.3.1 Oxygen Plant

The oxygen plant provides 4,000 tons per day of oxygen. It should pose no pollution problems since the only major effluent is a nitrogen stream, but there is a large consumption of utilities which affects overall thermal efficiency of the process.

A.1.3.2 Sulfur Plant

The H_2S stream from acid gas removal goes to a Claus plant. Sulfur recovery of about 97% can be achieved with three stages in "straight-through" flow. The tail gas still contains about 1 ton per day of sulfur and must be cleaned up, although this gas volume of 7 MM cfd is small relative to the other effluents. A number of processes are available now for tail gas clean up and several of these will be in commercial use soon (e.g. Shell's SCOT process, Wellman-Lord process,

Beavon Process, etc.). In some, the tail gas is first reduced to convert all sulfur compounds to H_2S which can then be removed; in others, the tail gas is incinerated and the SO_2 is then scrubbed out. Limestone scrubbing of the incinerated tail gas may be used, with disposal of spent limestone along with the coal ash being returned to the mine. The amount of spent limestone is relatively small.

No specific preference is indicated for Claus tail gas clean-up since by the time that coal gasification finds much commercial application in this country, there will be considerable commercial experience to draw on. It is reasonably certain that there will be at least one demonstrated, satisfactory process available.

A.1.3.3 Utilities

In the utilities area, the main cooling tower has by far the largest volume of discharge, 48,000 MM cfd of air. It is therefore critical from the standpoint of pollution. In this particular case it is not expected to contain significant amounts of undesirable contaminants. The cooling water circuit is clean and does not contain ash or objectionable materials such as H_2S. Normally a certain amount of leakage can be expected on exchangers using cooling water. Since the process operates at low pressure, this should not be a major item. Also, most of this cooling water is from steam condensers of drivers on compressors, rather than on oil, sour water, etc. Cooling towers will always have the problem of mist as well as fog formation, as discussed under the area of gas scrubbing.

The utility power plant is a major item from the standpoint of pollution as well as thermal efficiency of the over all process, and is sized to make the plant self-sufficient in steam and power. It is desirable to burn coal as fuel, which means that sulfur and ash removal are required on the flue gas. This particular coal contains 0.63 wt. % sulfur corresponding to 1.4 lb SO_2/MM btu, whereas the allowable is 1.2. Therefore, some sulfur control is required. There are many ways to do this. As one example, a water scrubber can be used to remove ash and if some limestone is added it should be feasible to remove, for example, 20% of the SO_2, and thereby conform to regulations. The amount of limestone to dispose of is moderate, amounting to about 40 tons per day for complete SO_2 removal, compared to the ash production of 235 tons per day from the utility boiler.

An alternative is to burn part of the product gas along with coal to meet the allowable quantity of SO_2 in the flue gas discharged to the atmosphere. It would be possible to burn only product gas in this utility boiler to supply all the fuel required. This may not be a practical case but does set a limit. It would result in minimum pollution from the utility boiler, with regard to sulfur and particulates, in cases where this is justified or necessary. The volume of flue gas from the power plant is 320 MM cfd, or about the same as the volume of clean product fuel gas.

In view of the intensive effort underway on flue gas clean-up, it is expected that there will be techniques in wide spread use by the time that coal gasification finds extensive application. When flue gas desulfurization is used on a boiler with coal firing, it may be desirable to add the Claus tail gas to the boiler so that it is incinerated and passes through the sulfur cleanup. This would avoid the need for separate facilities for tail gas cleanup, but it does assume that the Claus plant would be near the boiler house. Location of the boiler might also be dictated by the practicality of using the flue gas for coal drying.

A.2 Synthane Process

A.2.1 General

The Synthane Process being developed by the Bureau of Mines is an intrinsically high efficiency fluidized bed coal gasification system operating at commercial pipeline pressure and designed to produce high-Btu content product gas. Gasification is accomplished in the presence of steam/oxygen, whereby heat required for the gasification reactions is supplied by the reaction of oxygen with a portion of the coal. High pressure favors methane yield, minimizes gasifier volume, reduces oxygen requirement and reduces product gas compression. A good fluidized bed operation insures the homogeneous reaction system required to avoid damage by locally high oxygen concentrations.

It was found possible to pretreat any caking coal by the proper combination of oxygen content of the fluidizing gas, temperature, and residence time, using a single vessel system wherein the operations of coal pretreatment, carbonization, and gasification are combined.

An engineering evaluation of the Synthane Process, which by this time incorporated Bureau of Mines methanation developments, was prepared by The M.W. Kellogg Company in 1970. Notwithstanding the substantial extension of high-pressure technology required to commercialize the process, there was found sufficient incentive in the economies projected in terms of overall simplicity, high gasifier methane yield, and small reaction volumes to proceed with design of a prototype large pilot plant. The prototype pilot plant was designed by The Lummus Company, and is now being operated.

A block flow diagram of the process and auxiliary facilities is shown in Figure A.2.1. This design feeds 14,250 tpd of a Pittsburgh seam coal containing 2.5% moisture, 7.4% ash, and 1.6% sulfur to the gasifiers. 250MM scfd of product gas is produced, with a HHV of 927 Btu/scf.

A.2.2 Main Gasification Stream

A.2.2.1 Coal Preparation and Storage

On-site coal storage will be required for all gasification plants to provide back-up for continuous gasification operations. For

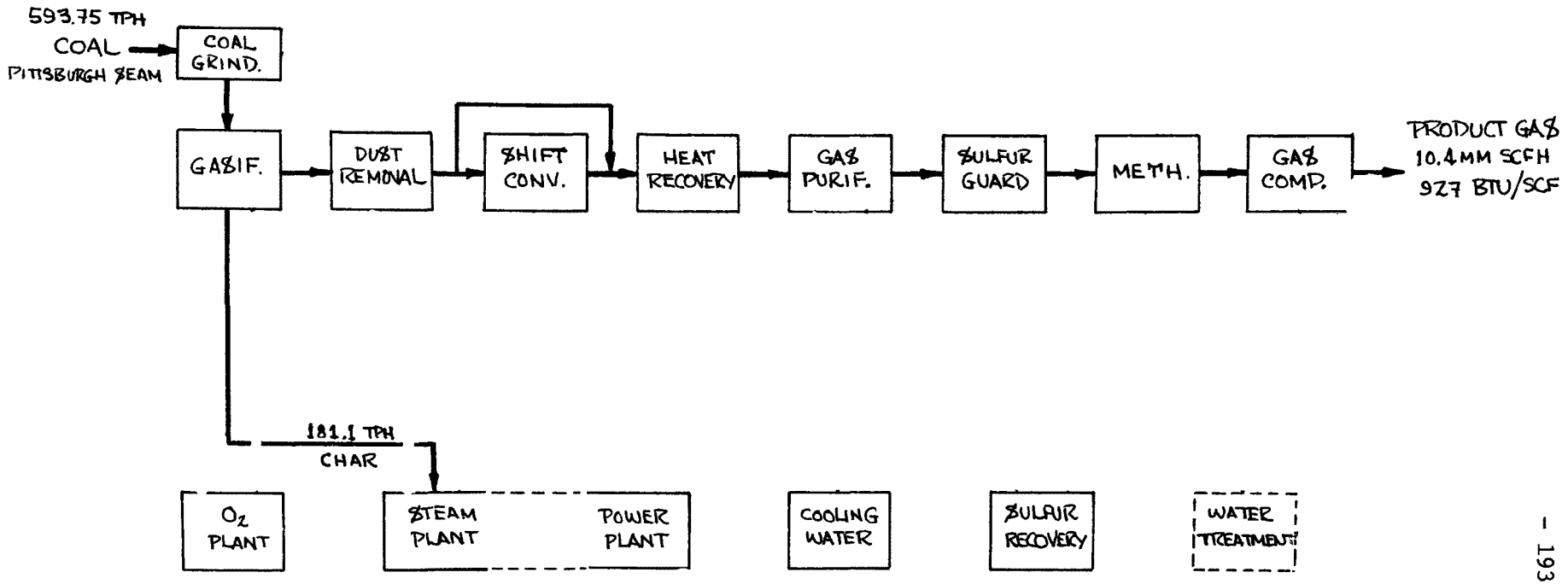

Figure A.2.1

SYNTHANE Coal Gasification - 250 million SCFD High - BTU Gas

thirty days storage, there might be four piles, each about 200 feet wide, 20 feet high, and 1000 feet long. Careful management and planning will minimize dusting and wind loss and the hazard of combustion in storage facilities.

The feed coal employed in this design has low inherent moisture content, such that a special coal drying step is not provided. It may be possible to operate the system without such a facility with coal from particular seams, but this indicates enclosed on-site storage. Coal of the type and size range (-3/4 inch) indicated to be held in stockpiles in this design might be expected to acquire and retain 6-8 weight per cent surface moisture on exposure to rain.

A.2.2.2 Coal Grinding

Approximately 53 MM cfd of atmospheric air is aspirated into the ball-mill grinding operation, which reduces coal size to 70 percent through 200 mesh. The air stream is heated in a circulation system and passed through the mills, where it serves both to control moisture in the pulverizing process and as transport medium for the pulverized material.

The coal/air mixture passes through cyclones, where separation occurs, and the air stream is discharged to the atmosphere through bag filters. Such arrangement is commercially proven, with acceptable particulate emission, though load on the filters may amount to some 60 tpd in this case. Only trace quantities of hydrocarbons have been detected in such commercial streams, and odor is not considered a problem. Collected fines from the filters are recycled to mill product.

A.2.2.3 Gasification

A.2.2.3.1 Coal Feed System

Coal is charged to the gasifiers in the Bureau of Mines design through pressurized lock hoppers. A number of alternatives regarding the mechanical arrangement, the pressurizing medium, and the consequent net energy requirement and pollution potential of lock hopper operation appear feasible.

In this design, each gasifier is provided with one lock hopper, which discharges alternately into two feed hoppers from which coal is passed to the gasifier using a steam/oxygen mix as transport medium. Oxygen reacts with coal in the transfer line, liberating heat which prevents steam condensation that might otherwise interfere with coal transport. Hence, in this case, some pretreatment of coal occurs in the transfer line.

The gasifier charging sequence involves filling the vented lock hopper from pulverized coal storage bins, pressurizing the filled lock hopper, and discharging its load into a feed hopper. In this configuration, it is presumed that a feed hopper is maintained slightly above gasifier operating pressure while on line to the gasifier, and

that pressure is allowed to drop to the gasifier pressure level as the hopper empties. At this point, the feed hopper is ready to accept another charge from the filled, pressurized lock hopper.

The pressurized lock hopper must be vented to essentially atmospheric pressure when empty of coal in order to be refilled. In a multiple gasifier system, operation may be sequenced such that initial venting may be to a lock hopper awaiting pressurization, or to a succession of these, such that some of the energy represented by the compressed gas may be recovered directly, while simultaneously reducing the quantity of residual gas to be vented ultimately. Alternatively, two or more lock hoppers might be provided each gasifier specifically to permit such sequencing, since there may be practical operating limitations to the degree to which gasifier operation may be scheduled.

The choice of pressurizing medium may directly affect the main gasification processing sequence, as well as the design and operation of the lock hopper system. The use of steam alone as this medium is considered mechanically unacceptable due to interference expected with coal transport from condensation, which may not be controllable.

Since some fraction of the pressurizing medium will travel with the coal into the gasifier, the use of a nitrogen-containing inert gas for such medium is considered unacceptable from a process viewpoint, since it dilutes the product gas, reducing its heating value, and occupies volume in the reaction sequence otherwise.

It is believed that CO_2, which is separated from the main process gas stream following shift conversion, is the preferred pressurization medium. Such CO_2 must be superheated to prevent liquefaction at 1000 psia, and the rate of heat loss from the pressurized feed system must be controlled to prevent condensation. Depending on the mode of operation of the feed system, the volume of raw gas issuing from the gasifier may be increased some 3-5 percent as a consequence of admission of pressurization gas with coal. This increased volume must be handled through the acid gas removal step, but it is presumed otherwise not to affect process operation.

In the method of operation of the coal feed system described above for this design, there should be no opportunity for gasifier gas to back through the lock hopper. Hence, trace quantities only of coal-originated materials, other than coal dust, should appear in vent gas. However, the use of a heated hopper system, as will be required if CO_2 is the pressurization medium, may subject coal in contact with heated surfaces to sufficiently high temperature to cause stripping of volatiles or of sulfurous gas. Formation of carbon- or carbonyl sulfides is also possible.

We have assumed an alternative to continuous atmospheric venting which involves containment of lock hopper vent gas, as in gas holders from which it could be recompressed, limiting the requirement for fresh make-up gas to the losses (largely back into the system) from the coal feed system. In this arrangement, it will probably be necessary to treat or filter gas entering the holder to remove dust.

A.2.2.3.2 Char Letdown

Ash must be removed from the Synthane gasifier, as in most gasification processes, in a more or less continuous fashion, to maintain carbon concentrations in the gasification zone sufficiently high for desired reactions to proceed. Experimental work indicates incentive for limiting the degree of carbon gasification, and a proposed feature of the Synthane process involves setting the carbon content of the ash (char) removed from the gasifier such that combustion of the char will balance the total steam and energy requirements for the process.

The high operating pressure of the Synthane gasifier imposes special problems on the system used to extract char. At the point of discharge from the gasifier bed, char is indicated to be at temperatures in excess of 1700°F.

The char in this design represents a significant sensible heat discharge from the gasifier. From thermal and process points of view, perhaps the ideal system would transfer hot char directly to the boiler in which it is to be combusted along with any associated gas, preserving most of this heat and avoiding use of cooling media, water or steam, that would require additional energy to subsequently separate or treat. The mechanical design of a throttling arrangement that would permit such operation, however, will require substantial development.

Consideration of a variety of alternatives led the designers of the large pilot plant to a system wherein char is cooled in situ prior to the point at which it must be passed through valves. Hot char is caused to flow into a separate fluidized bed cooler by regulating the pressure differential between the gasifier bed and the cooler. Steam is used to fluidize the bed, and water is injected into the system for cooling. High-pressure steam is generated in the cooler, and this steam may be used in the process (specifically in the carbon monoxide shift converter) after it has been filtered to remove char fines. The designers point out that this steam might be directed to the gasifier in its contaminated state if the gasifier distributor were designed to introduce contaminated steam and oxygen separately.

Cooled char may be fluidized out of the cooler bed into lock hoppers, avoiding throttling valves, or may be passed from the bottom of the cooler bed through valves into lock hoppers. Agglomerates which may come from the gasifier could present problems with either method of cooler operation.

The preferred alternative is a "dry" system, in which a filled char lock hopper is isolated with valves which are arranged to be blown clean before closing. Steam is vented to atmosphere via filters arranged within the lock hopper, ahead of the pressure-reducing valves. Char flows out of the bottom of the lock hopper into a conveying line in which steam is used as transport medium. The empty lock hopper is repressurized with steam before being put on line to again receive char.

A second alternative directs a char/steam mix from the cooler through a slide valve into a char slurry quench tank, where water sprays cool the char and a slurry is formed. The quench tank is vented to the char cooler. Char slurry is depressured through orifice valve arrangements, the char slurry is filtered to recover water, and water is recycled to the slurry quench tank through coolers. The char filter cake is estimated to contain 40-50 percent water in this case.

Gas from the gasifier will be carried into the char cooler along with char. It is presumed that most of this gas will issue from the char cooler along with the generated steam and be directed back into the main gasification stream, either directly into the gasifiers or at the shift converters. It is not possible to estimate the degree of gas contamination that may persist through the char depressurizing system into the steam which is indicated to be vented ultimately from a "dry char" process. Some 3000 pounds per hour of steam is estimated to be so vented if this scheme be applied to the Bureau of Mines design. Depending on its composition, some of this vent steam may be employed in the scrubber water treating system, or may serve to transport char to the utility boiler, in an integrated commercial plant. Although there would probably be least atmospheric pollution associated with a "wet char" or slurry letdown system, the water pollution generated and the energy associated with water treatment and wet char combustion would indicate that the slurry technique would be used only if an operable dry char arrangement cannot be developed.

To summarize, the design basis does not specify the method by which char will be removed from the gasifiers, except to provide lock hoppers to receive char. The lock hopper volume provided is not consistent with estimates of char density, so that lock hopper cycle rate may be higher than indicated.

With the preferred dry char process, we have assumed that about 100,000 pounds per hour of high pressure steam will be generated by direct water injection in the char cooler, and that this steam, along with associated gasifier gas, will be reintroduced into the process at the shift converters. Some 3000 to 6000 pounds per hour of steam is estimated to be vented from the lock hoppers, depending on cycle rate. "Dry" char is assumed to be conveyed to the utility boiler using a steam transport system. Net atmospheric pollution associated with char let-down is therefore assumed minor.

A.2.2.4 Dust Removal

Raw gas issuing from the gasifiers must be treated to remove particulates and condensable matter that may interfere with subsequent gas processing. The precise nature of materials which must be separated from raw gas at this point is not known, except that coal or char fines and coal-tars or oils are assumed to be present.

In the design basis, gas from the gasifiers passes first through cyclones, where heavier particles (char) are removed, and then the

gas is subjected to cold-water scrubbing. Scrubber liquor effluent is depressured into decanters, where tar separation occurs, and water is recirculated to the scrubbers through water-cooled heat exchangers by high-pressure pumps. This design does not further detail the operation, or provide for further handling of separated products or of scrubber liquid.

We believe it may be possible to adapt a "tar-scrubber" of the type developed for petroleum fluid coking reactors to the Synthane coal gasifier to avoid the mechanical problems associated with tar and solids deposition in the gas outlets. Moreover, it should be possible to extract high-level energy from the process.

In the fluid coker, the scrubber vessel is integral with the coker reactor. The cyclone is internal to the reactor, with its outlet gas discharge into the scrubber. Heavy tar condensed from the gas stream in the scrubber is pumped through external exchangers, where high-pressure steam is generated. The cooled tar stream separates, with the portion not used for scrubbing being returned to the coker feed line. It is of course necessary to control temperature of the tar pool in the bottom of the scrubber vessel and tar velocities in the external circuit to prevent coking and solids deposition.

In the Synthane design, gasifier outlet temperature is estimated to be 800-1400°F. A steam dew-point of about 440°F is estimated for the raw gas conditions. It is further estimated that up to 70 percent of the heavy tar in the gas stream may be condensed by operation of the tar scrubber at about 560°F, or sufficiently high in temperature to permit generation of 1000 psia steam in the external circuit. It is estimated that about 365,000 pounds per hour of 1000 psia steam could be generated in this manner, assuming gasifier output to be at 1000°F.

Removal of the bulk of the heavy tar in the gas stream at this point should greatly reduce the emulsification problem as water is condensed from the gas downstream. Similarly, the tar scrubber would serve to remove a major fraction of the char, ash, and coal fines contained in this gas, so that loads on the downstream tar-oil separation and water treatment systems should be reduced significantly.

From a thermal point of view, it would be desirable to return the separated tar stream to the gasifier, as is done in the petroleum coker. But if this is found to adversely affect gasification, such separated tar could instead be directed to the char utility boiler or may be further processed for sale.

In this design, we have assumed that scrubbing will be used following the tar scrubber, but that gas which separates from the scrubber effluents on depressuring will be recompressed back into the main gas stream at a point following shift conversion. Additional tar and hydrocarbons which condense along with water from the gas stream as the stream temperature is lowered may be directed to finishing facilities to be processed for sale, or could be burned in the utility boiler. Either or

both water and light hydrocarbon might be recirculated to scrub the gas stream, and steam could be generated in the process of cooling the circulated fluids. Alternatively at some point, gas would be sufficiently clean to permit direct operation in a conventional waste heat boiler. On the assumption that gas temperature is reduced to about 300°F to effect clean-up, some 300,000 to 400,000 pounds per hour of low-pressure steam may be generated in the scrubbers.

A.2.2.5 Shift Conversion

Scrubbed raw gas from the dust removal process is separated into two equal streams, one of which by-passes the shift converters, since only half of the total stream must be shifted to adjust the total H_2:CO ratio to 3:1 for purposes of methanation. In this design, a significant quantity of high-pressure steam must be introduced to the catalytic shift converters to achieve desired equilibrium, however.

A.2.2.6 Waste Heat Recovery

The raw gas streams which are split ahead of shift conversion are recombined following the converters, and are cooled from an average temperature of about 500°F to 300°F ahead of the gas purification system. Low-pressure steam is generated, and there are no effluents to atmosphere.

A.2.2.7 Light Hydrocarbon Removal

For our design, we have assumed that the gas stream may be cooled in water exchangers to about 90°F after it has been used to reboil the Benfield regenerator and passed through light oil scrubbers to remove B-T-X components. The scrubbing fluid would be available from the upstream hydrocarbon separators. Gas which separates on depressurizing this scrubber effluent could be recycled to the vapor space of the upstream separators for recompression into the main gas stream. Downstream distillation facilities would be required to separate naphtha if it were to be sold. It is estimated that 20,000-25,000 GPD of B-T-X could be so separated, requiring an estimated equivalent of 25,000 pounds per hour of low-pressure steam.

Part of the heat removed in the cooling process could be returned to the gas stream after scrubbing by exchange with the heated water leaving the coolers, so that the net thermal loss might be held to the equivalent of about 60,000 pounds per hour of low-pressure steam. About 18,000 pounds per hour of water would be condensed from the gas stream on cooling, and this (equivalent) water would have to be reintroduced on reheating the gas to avoid depletion of the Benfield solution. This might best be accomplished by direct introduction of high-pressure steam, rather than by reintroduction of the contaminated separated water, which would be directed to the waste water treatment facility.

A.2.2.8 Gas Purification

The gas purification or acid gas removal process which is used is the "Benfield" hot potassium carbonate system developed by the Bureau

of Mines. This method of removing CO_2 and H_2S from the produced gas is indicated to have substantial thermal advantage over amine systems at the high process pressure employed.

In the Benfield system, gas absorption takes place in a concentrated aqueous solution of potassium carbonate which is maintained at above the atmospheric boiling point of the solution (225°-240°F) in the high-pressure absorber. The high solution temperature permits high concentrations of carbonate (alkalinity) to exist without incurring precipitation of bicarbonate according to:

$$K_2CO_3 + CO_2 + H_2O \longrightarrow 2KHCO_3$$

Partial regeneration of the rich carbonate solution is effected by flashing as the solution is depressured into the regenerators. In this design, sensible heat of the main gas stream is used to reboil the regenerators, so that the gas is cooled to about 260°F in the process. The gas is further cooled in cold-water exchangers to about 225°F before entering the absorbers.

It is necessary in this design to admit additional low-pressure steam into the regenerators to complete the regeneration process and to balance heat and water requirements. Regenerated solution is pumped back through the absorbers. The main process gas stream exits the absorbers at 230°F, and is cooled by cold-water exchange to about 100°F before undergoing residual sulfur cleanup. Stripped acid-gas flows to the sulfur recovery plant.

A.2.2.9 Residual Sulfur Cleanup

Methanation catalysts are adversely sensitive to very small quantities of sulfur in feed gas. The Benfield system is reported to be capable of operation such that sulfur present in process gas as hydrogen sulfide and carbonyl sulfide may be virtually completely removed. Less is known about the other forms of organic sulfur which may be present in process gas, especially thiophenes.

This design incorporates a sequence of iron oxide and char towers for residual sulfur cleanup ahead of the methanation reactors. It is estimated that total sulfur in gas may be reduced to less than 0.1 grain/100 ft^3 in this arrangement. Some provision will have to be made to permit change-out of the beds in this section. Hence, the high-pressure gas in the beds will have to be vented, and the beds will have to be inerted before being opened. It is assumed that the vented high-pressure gas will be directed to the utility boiler. Steam, which may be used for inerting, may be directed back to the Benfield regenerator.

Steaming, or other inerting, will also be required to purge the bed of oxygen when a new bed is to be put on line. It is assumed then that the only discharge to atmosphere from this section will be such inerting medium, and, further, that the quantity of this gas will be very small.

A.2.2.10 Methanation

The Bureau of Mines has developed two methanation processes for application in the Synthane system, and both will be tested in the prototype pilot plant being constructed at Bruceton.

This design incorporates the Tube Wall Reactor or TWR process, in which the methanation reactor is constructed in the form of a heat exchanger. Reaction occurs on a Raney nickel catalyst coating applied to the exterior of the exchanger tubes, and Dowtherm is vaporized through the tubes to remove reaction heat. High-pressure steam is generated in a separate boiler in the process of condensing and cooling the Dowtherm heat exchange fluid, which is then recycled to the methanator.

A.2.2.11 Final Methanation

The design basis does not include specific equipment for limiting CO content of product gas issuing from methanation. Depending on the ultimate use of product, CO content may be required to be held to less than 0.1 volume percent. The experimental data reported to date would indicate that a final treat will be required to limit CO content in methanator effluent to specification. In a commercial plant, some arrangement, possibly involving standby methanators, would probably be required in any event to handle sudden loss of activity or other malfunction in the process train at this point. In our design, we have assumed that specification CO levels will be achieved in the methanation plant proper.

A.2.2.12 Final Compression

Pressure drop through the Synthane train is indicated to amount to about 65 psi. Gas leaving the methanation plant is cooled to 100°F to remove water, and is then compressed to 1000 psig, the design product delivery pressure.

A.2.3 Auxiliary Facilities

We have elected in this study to treat the main gasification stream separately from all other facilities, which are thereby defined as auxiliary facilities. The functions of these auxiliary facilities are nonetheless required by the process, and, for economic and/or ecologic reasons, would be constructed along with the gasification system in an integrated plant.

A.2.3.1 Oxygen Plant

The oxygen plant provides a total of 3650 tons per day of oxygen. The only effluents to the air from this facility should be the components of air, principally nitrogen. About 330 MM scfd of nitrogen will be separated. Some of this nitrogen may be used to advantage in the plant to inert vessels or conveyances, to serve as transport medium for combustible powders or dusts, as an inert stripping agent in regeneration or distillation, or to dilute other effluent gas streams.

It will be possible to generate about 900 KW of electricity by recovering the compression energy of the nitrogen through turbo-expanders.

About 425 MM scfd of air is taken into the oxygen facility. Placement of the oxygen facility will depend in part on the desire to maintain the quality of the air drawn into the system and, especially, to minimize interference from plant effluents.

A.2.3.2 Sulfur Plant

The Stretford process has been assumed for sulfur removal. In the Stretford process, sour gas is washed with an aqueous solution containing sodium carbonate, sodium vanadate, anthraquinone disulfonic acid, and a trace of chelated iron. The solution reaches an equilibrium with respect to CO_2, such that only small amounts of CO_2 are removed from the gas undergoing treatment.

In this system, H_2S dissolves in the alkaline solution, and may be removed to any desired level. The hydrosulfide formed reacts with the 5-valent state vanadium, and is oxidized to elemental sulfur The wash liquor is regenerated by air blowing, wherein reduced vanadium is restored to the 5-valent state via an oxygen transfer involving the ADA. The sulfur is removed by froth flotation and filtration or centrifugation.

A.2.3.3 Utilities

A.2.3.3.1 Power and Steam Generation

The choice of fuel for the generation of the auxiliary electric power and steam required by coal gasification plants markedly affects the overall process thermal efficiency. It is generally least efficient to burn the clean product gas for this purpose. On the other hand, investment in power-plant facilities, including those required to handle the fuel and to treat the flue gas, is generally least when product gas is so used.

Synthane gasification is one of the class of coal gasification processes which generate a carbon-containing char. Research to date would indicate that it is not desirable to gasify more than about 90% of the carbon in feed coal, and that it may be preferable to limit gasification to about 60-70 per cent of carbon for most feeds. A particular feature of the Synthane process design, therefore, is that the carbon content of char leaving the gasifier may be adjusted such that the subsequent combustion of the char will balance the power and steam requirements for the system.

It may be assumed that combustion of Synthane chars will be possible in conventional fireboxes if product gas is used as supplemental fuel. This alternative might be preferred then on the basis of carrying the least developmental debits, and because it should be possible to adjust SO_2 concentration in flue gas from most chars such that subsequent

flue gas treatment may be avoided. It has the disadvantage of adversely affecting overall thermal efficiency.

For this design, we have assumed that equipment will be developed to combust char alone with essentially complete carbon utilization. This may be possible, for example, in a fluidized bed boiler and, especially, in a fluidized bed system which incorporates combustion in the presence of limestone to remove sulfur. Otherwise, such char combustion will in general require that flue gases be treated to remove sulfur. And, as indicated above, the development of a large-scale char burning system, as with the development of any new commercial boiler concept, may involve appreciable effort, a long lead time, and considerable investment.

A.2.3.3.2 Cooling Water

A total of 260,000 gpm of cooling water is indicated to be required in this design. If cooling towers were used for this total plant, a minimum of 6600 gpm of water would be evaporated. Drift loss would be in excess of 500 gpm, and draw-off might be about 800 gpm. Air requirement would amount to some 48,000 MM scfd. Reheat of plumes would be required to avoid fogs in some cases.

A.2.3.3.3 Waste Water Treatment

Facilities required to treat water, including raw water, boiler feed water, and aqueous effluents, will include separate collection facilities:

- Effluent or chemical sewer
- Oily water sewer
- Oily storm sewer
- Clean storm sewer
- Cooling tower blowdown
- Boiler blowdown
- Sanitary waste

Retention ponds for run-offs and for flow equalization within the system will be required. Run-off from the paved process area could easily exceed 15,000 gpm during rainstorms. Run-off from the unpaved process and storage areas could exceed 60,000 gpm in a maximum one-hour period.

Pretreatment facilities will include sour water stripping for chemical effluents and Imhoff tanks or septic tanks and drainage fields for sanitary waste.

Gravity settling facilities for oily wastes will include API separators, skim ponds, or parallel plate separators.

Secondary treatment for oily and chemical wastes will include dissolved air flotation units, granular-media filtration, or chemical flocculation units.

Oxygen demand reduction may be accomplished in activated sludge units, trickling filters, natural or aerated lagoons, or by activated carbon treatment.

Boiler feedwater treatment will in general involve use of ion-exchange resins. Reverse osmosis, electrodialysis, and ozonation may find special application.

A.3 Lurgi Process

A.3.1 General

The Lurgi process has operations similar to other types of coal gasification processes, except for the gasification step itself. The gasification step in each case is peculiar to the process. In general, coal gasification involves getting coal from the mine, storing it, reducing its size to that necessary for gasification, and, possibly, pretreating the coal. The gasifier raw gas is generally processed through a shift reactor which converts carbon monoxide and steam to carbon dioxide and hydrogen. The hydrogen is necessary for a later step in methanation. This shift reaction is only applied to the raw gas if one desires to up-grade it to a synthetic natural gas (SNG) stream. For a low heating value gas, a water gas shift section is not required. In this Lurgi study, the assumption is that the gas will be up-graded to SNG. Following the shift there is a clean-up step to remove from the effluent gas all the H_2S and most of the CO_2. The acid gases are then taken for sulphur production through a Claus plant or other sulfur recovery process. The last traces of sulfur are then removed from the gas purification product stream in order not to poison the methanation catalyst.

The next step is methanation, where three moles of hydrogen react with each mole of carbon monoxide to produce a mole of methane and a mole of steam. Considerable quantities of CO_2 also react to produce methane. These are highly exothermic reactions which produce a fair amount of the steam required in the plant. Following methanation there is a drying step and the gas is compressed to pipeline pressure.

The plant is designed to produce 250 MM scfd of SNG with a heating value of 972 Btu/scf. A flow diagram for the plant is shown in Figure A.3.1.

A.3.2 Main Gasification Stream

A.3.2.1 Coal Storage and Pretreatment

The coal storage part of the plant does not involve coal cleaning, gangue removal or primary screening. All of these operations are assumed to have taken place at the mine. The coal from the mine is transported to the gasification plant by a continuous belt conveyor. The higher heating value (HHV) used in the design is 8872 Btu/lb of coal.

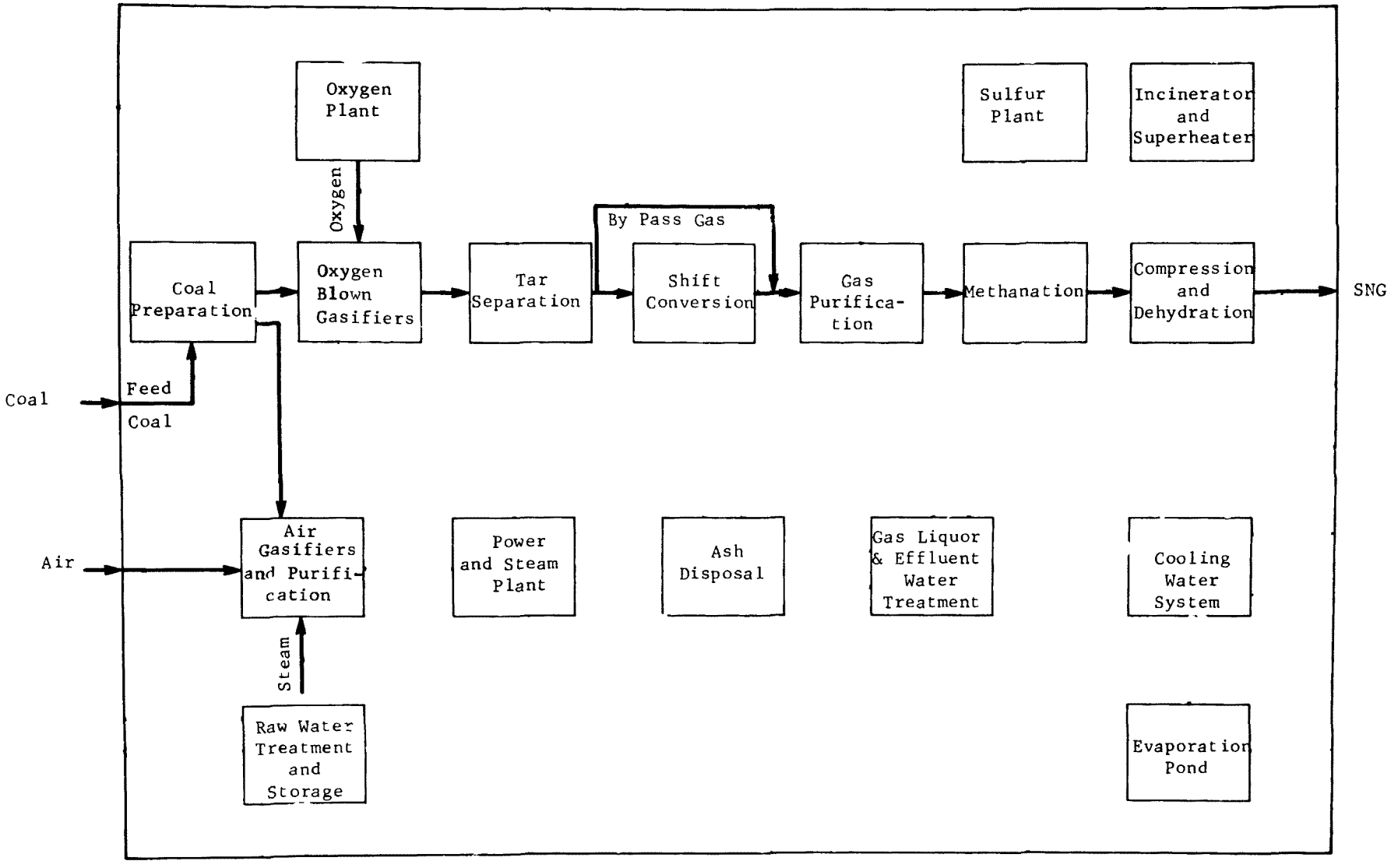

Figure A.3.1

LURGI Process

The sub-bituminous coal delivered to the gasification plant is crushed to 1-3/4" x 0. Six storage areas are used for stock piling. Each area is 1,750 ft. long x 124 ft. wide and contains roughly 120,000 tons of coal. Coal from the various storage piles is blended prior to feeding it to the gasifier in order to achieve proper heating value control (Btu control). An emergency stock pile and re-claiming facility are available to provide an additional 650,000 tons of coal. This will provide a 25 day supply of coal in cases of emergency.

A secondary screening facility is present at the gasification plant. The 1-3/4" x 0 coal is screened to produce two gasifier feed sizes (1-3/4" x 5/8" and 3/8" x 3/16"). Two sizes of coal are used as an economic measure to minimize size reduction and screening operations. All undersized material is conveyed at a rate of about 260 tons per hour to a briquetting plant. Briquettes are fabricated and sized to 1-3/4" x 5/8". The briquettes are mixed with the feed going to the gasifier. The briquetting plant contains mixers, coaters and compactors in order to mix the coal fines with a tar binder.

Wet scrubber dust collectors are installed in the screening and briquetting plant to eliminate dust and fuel emissions. Sprays are used at transfer points for dust suppression.

A.3.2.2 Gasification

In the Lurgi Process, gasification takes place in a counter-current moving bed of coal at 420 psig. A cyclic mode of operating using a pressurized hopper is used to feed coal. The pressurizing medium is a slip stream of raw gas which is later recompressed and put back into the raw gas stream going to purification. The gasifier has a water jacket to protect the vessel and provide steam for gasification. Approximately 10% of the gasification steam requirement is provided in this manner.

In general there are three process zones in the gasifier. The first zone devolatilizes the coal. As the coal drops down it is met with hot synthesis gas coming up from the bottom causing devolatilization, thus removing hydrocarbons and methane from the coal. As the coal drops lower to the second zone, gasification occurs by the reaction of carbon with steam. Finally as the coal approaches the grate, carbon is burned to produce the heat required for the gasification process.

The top and middle zone temperatures are generally between 1100 and 1400°F, where the devolatilization and gasification take place. The gas leaves the bed between 700 and 1100°F depending on the rank of the coal. The effluent stream for the Navajo sub-bituminous coal will be approximately 850°F. The temperature of the ash is kept below the ash fusion temperature by introducing sufficient steam to avoid ash fusion.

The gas stream leaving the Lurgi gasifier contains coal dust, oil, naphtha, phenol, ammonia, tar oil, ash, char and other constituents. This mixture goes through a scrubbing and cooling tower to remove the tar.

The raw gas stream then goes through a waste heat boiler where the raw gas temperature is cooled to about 370°F. The boiler produces 112 psia steam for the Rectisol, Phenosolvan, and Stretford plants. The raw gas stream after cooling is split into roughly two equal parts. Half of it goes through shift conversion to produce additional hydrogen which will be needed for methanation. The other half goes directly to the gas purification system. Any liquid that is condensed in the waste heat boiler and gas cooling section is sent to the gas liquor separation unit.

The coal lock hopper gas is compressed and mixed with the stream that goes directly to purification. This lock hopper gas stream is mixed with other vent streams which contain sufficient quantities of carbon monoxide and methane to warrant its re-introduction into the raw gas stream.

A.3.2 3 Tar Separation

The water that was used to initially quench the gas as it comes out of the gasifier becomes a gas liquor. The gas liquor cools the crude gas mixture to a temperature at which it is saturated with water. This gas liquor is then flashed, and the tar is removed out of the bottom. The top phase is then sent to water purification. The gas liquor flash tanks will also receive the aqueous effluent from the cooling area prior to the shift reactor. In the gas liquor purification system,dissolved phenol and ammonia are removed for subsequent by-product recovery value.

A.3.2.4 Shift Conversion

Slightly less than half of the total crude gas is sent to the shift conversion section. The crude gas will be cooled in a waste heat boiler generating steam at about 76 psia. This is the gas that goes to the shift reactor section. The shift reactors are designed to produce hydrogen by the "water-gas shift" reaction. The shift gas feed is quenched and washed in a countercurrent water tower. The washed gas is heated and passed through a pre-reactor to remove carbon containing residues. The heated gas will be shifted in a series of reactors resulting in 77.2% conversion of carbon monoxide. The equilibrium temperature at which the 77.2% of the CO would be converted in this system is 800°F. Shift reactors generally operate between 700 and 1000°F. The shift section is designed to produce a ratio of over three moles of hydrogen to each mole of carbon monoxide in the total gas stream for methanation. In this design the ratio of H_2:CO going to methanation is 3.7.

The hot gas liquor and tar which are condensed during cooling in the wast heat boiler are sent to the tar separation units. The product stream from shift conversion is then mixed with the by-pass gas stream from the gasification unit and is cooled and sent to gas purification. Since the shift reaction is fairly exothermic, a fair quantity of heat is recovered prior to the low temperature gas purification step. Heat is also recovered from the crude gas stream that does not go through the shift reactors.

A.3.2.5 Gas Purification

The effluent stream from the shift reactor section is combined with the other half of the raw gas and the recompressed lock hopper gas, and is then sent to the purification system. The mixed gas stream is cooled to low temperature in order to go into the Rectisol system. The Rectisol process is a low temperature methanol wash process which removes acid gases such as H_2S, COS and CO_2 down to a level of about 0.1 vppm. The gas purification system is also used for drying and reducing the CO_2 level prior to final pipeline compression. The efficiency of methanol absorption increases considerably with decreasing temperature. The lowest temperature used in the process is on the order of -75°F. The first vessel in the Rectisol unit is a prewash tower which strips out naptha and cools the raw gas. The absorber then removes H_2S and COS down to about 0.1 vppm. Roughly 88% of the CO_2 is also absorbed at this time. The effluent raw gas from the methanol refrigerated absorption column is used to cool the incoming acid gas stream. This sulfur free gas stream is then sent to the methanation area.

All the acid gas streams are combined into a single stream and delivered to the sulfur recovery plant. The sulfur plant stream also includes the carbon dioxide that is removed after methanation. The acid gases from the cold methanol are recovered in a multi-stage operation. The acid gas containing stream is regenerated by step-wise expansion. The last step is a vacuum distillation. The stream to the sulfur plant contains, in addition to the acid gases, a fair amount of product hydrocarbons and carbon monoxide which will ultimately be burned in the incinerator. A mechanical compression refrigeration cycle is used which provides refrigeration at two temperatures: high level refrigeration at 32°F and -50°F which is used for the acid gas treatment. The 32°F methanol stream is used mostly for removing water vapor.

A.3.2.6 Methanation

The feed gas leaving the acid gas purification system is preheated with product gas leaving the methanation reaction section. Methanation catalysts are known to be extremely sensitive to poisoning by sulfur. The fresh feed is therefore treated with zinc oxide beds prior to exposure to the catalyst. A fraction of the methanated product is recycled and mixed with the feed to dilute the concentration of reactants in the feed. The heat of reaction that is generated by the synthesis of methane is removed by converting boiler feed water to process steam. This steam is used for gasification and in other parts of the plant.

A.3.2.7 Compression and Dehydration

The product gas from the methanation reaction section leaves at approximately 225 psia and 800°F. The stream is cooled and is sent to a final product condensate separator. The water is recovered and is sent to the raw water treatment plant. The gas is cooled to 90°F and is then recompressed from 225 to 500 psia. This stream is then sent

back to acid gas removal systems for CO_2 and water removal. The effluent from the gas purification system is then sent to the second stage of the compressor where the pressure is boosted to 915 psia to meet pipeline requirements. Air cooling is used to cool the compressor effluent gas prior to delivery to the pipeline.

A.3.3 Auxiliary Facilities

In addition to the basic process facilities described above a number of auxiliary facilities are required to make the plant run efficiently and to remove pollutants. These will be described in this section.

A.3.3.1 Oxygen Plant

Three oxygen plants are required in this process to produce 6,000 tons per day of 98% pure oxygen. Approximately 444,000 scfm of air are compressed to 90 psia with three parallel centrifugal compressors. In so doing, the moisture content of the air is condensed and is available for process use.

A.3.3.2 Sulfur Plant

The H_2S effluent stream from the acid gas purification system and the H_2S from the acid gas treatment plant (hot potassium carbonate) from fuel gas production are sent to a Stretford sulfur recovery plant. The Stretford process was chosen for sulfur recovery in this plant because the total percentage of sulfur in the input stream is only 1%. It is not practical to use a Claus Plant for less than 10% H_2S; capital and operating costs increase drastically as throughput volume increases. Roughly, 94% of the sulfur that comes into this unit is removed and high quality elemental sulfur is produced. The effluent stream contains 741 ppm of sulfur as H_2S and COS. This stream is combined with fuel gas and is incinerated in the superheater fire box.

The acid gas entering the Stretford unit is treated with a water solution containing sodium carbonate, sodium vanadate, anthraquinone disulfonic acid (ADA), citric acid, and traces of chelated iron at 80°F and a pH of 8.5. The H_2S is oxidized by the vanadate to form elemental sulfur. The vanadium, which is reduced by the sulfur reaction, is then reoxidized by the ADA to the pentavalant state. This reaction occurs in the absorber using air as the oxidizing medium. The liquid containing elemental sulfur passes to an oxidizer where ADA is reoxidized by air. The elemental sulfur/air froth overflows to a holding tank. The reoxidized solution is recycled back to the absorber. The sulfur is recovered from the sulfur froth by filtration, centrifugation or floatation. A typical Stretford solution purge contains sodium salts of anthraquinone disulfonate, metavanadate, citrate, thiosulfate and thiocyanate for which acceptable disposal must be arranged.

A.3.3.3 Incineration

The effluent stream from the Stretford sulfur plant is sent to incineration. The incinerator superheater fire box consumes about 13.7% of the product gas from the air gasification section. This corresponds to 44.9 MM scfd. This stream which consists essentially of 96% carbon dioxide will have a total flow of 367 MM scfd on a dry basis, and a higher heating value of 29 Btu/scf. Approximately 321 M lb/hr of air will be required to completely burn the Stretford effluent stream. The combined effluents from incineration and superheating come out of a common stack. The flue gas composition will be 62.5% CO_2, 7.4% H_2O, 295 ppm SO_2, 76.5 ppm COS, 57.5 ppm NO_x, 0.3% O_2, and 29.8% N_2. The total amount of heat input into the incinerator/superheater is approximately 872 million Btu/hr.

A.3.3.4 Power and Steam Production

The power requirements for the gasification complex are met with a boiler-gas turbine combined cycle fired with a low Btu gas produced in a Lurgi gasifier using air. The Navajo coal is gasified at about 285 psig. The method of operating the 10 gasifiers (9 on stream and 1 on stand-by) is similar to that previously described for the oxygen gasifiers. The raw gas produced goes through a tar separation unit and then through an acid gas treatment section. The raw gas is desulfurized using a hot potassium carbonate system. The H_2S and CO_2 from the hot potassium carbonate system is sent to the Stretford unit and combined with the Rectisol effluent in order to produce elemental sulfur.

The same type of coal preparation mentioned previously is used for this gasification. The lock hopper vent gas is compressed and combined with the raw gas prior to acid gas treatment. In this system, hot compressed air and steam are mixed and introduced through the bottom grate. The ash is removed and combined with the ash from the oxygen gasifier in the ash quench pond. The ash slurry is transported back to the mine for ultimate disposal. Approximately 327 MM scfd of dry fuel gas is thus produced with a higher heating value of 230 Btu/scf.

The flue gas is used in a combined cycle operation. Approximately 1/4 of the total gas is sent to gas turbines to operate the oxygen plant compressors. The rest of the fuel gas stream is heated in a fuel gas fired heater prior to going through a fuel gas expander. The effluent stream from the expander is used to fire the fuel gas heater, steam superheater, incinerator, and the power boiler. The fuel gas distribution is given in Table 5.

A.3.3.5 Raw Water Treatment

Raw water is supplied to a 21-day hold up storage reservoir from a major source such as a lake or river. The capacity of the reservoir is 185 million gallons, and it occupies a site of 28 acres by 30 feet deep. The reservoir serves various functions which include a place to settle silt and provide water for fire control. The reservoir is lined

to avoid seepage. The rate of evaporation from the reservoir is 145 gpm. Raw water strainers are placed on the inlet to the pumps going to the raw water treatment section.

Approximately 4900 gpm of raw water are pumped out of the reservoir to the treatment section. An additional 600 gpm are recycled from the methanation reaction and condensate from the oxygen plant. After the water is strained to remove silt, it is pumped to a lime treater where it is treated and clarified. The water in the clarifier is treated with alum and polymers. The effluents from the clarifier are drained to a clear-well where they are temporarily stored. The water from the clear-well is pumped through anthracite pressure filters. Approximately 4500 gpm are sent to demineralization. Of this amount 3900 gpm go in to become feed water for steam production. The demineralization section blowdown consisting of 551 gpm is sent to the ash quench area. Roughly 1/3 of the latter amount of water is taken back to the mine as part of the ash slurry for ultimate disposal. The process condensate aerator is used to remove hydrocarbons as well as carbon dioxide which might be dissolved in the water. The effluent from the condensate aerating vessel is mixed with the demineralizer effluent. The total demineralizer effluent flow rate is therefore approximately 4500 gpm. The pressure filter requires roughly 300 gpm of back wash which is sent back into the reservoir. The reservoir capacity is sized so that all the silt can be collected over the life of the project which is roughly 25 years.

Approximately 2 tons per hour of water treating chemicals will have to be disposed of from the raw water treatment section. Most of these chemicals are sent to the evaporation pond and stored there for the life of the project. Roughly 1000 lb per hour of water treating chemical wastes are chemicals associated with the demineralization section. The demineralization waste stream contains caustic, sulfuric acid and resins. The internal water cooling system also requires chemical treatment.

The plant is designed to use 130,000 gpm of cooling water. This system removes 1170 MM Btu/hr. Water is designed to leave the cooling water system at 75°F and is returned at 93°F. The cooling water make-up requirement is approximately 2.2% of the circulation or 2810 gpm. Most of this make-up is supplied from the effluent water treatment area. The cooling water is supplied by three 5-cell cross-flow cooling towers. The cooling water is treated with chemicals in order to control corrosion, scale formation, plant growth and pH. The cooling towers are designed for a wet bulb temperature of 67°F, allowing an 8°F approach to the designed condition. The cooling tower blowdown, consisting of only 210 gpm, is sent to the evaporation pond. Drift loss from the cooling towers is 260 gpm. The chemicals that are added to the cooling tower include an antifoam package, a biological control package, a scale and corrosion control package, and sulfuric acid for pH control.

A.3.3.6 Gas Liquor Treatment and Effluent Water Treatment

The aqueous streams condensed from the coal gasification and gas processing areas by scrubbing and cooling the crude gas stream are called the gas liquor. Gas liquor is collected in one central area coming from gasification, shift, gas purification, and fuel gas synthesis. Before all of these aqueous streams are collected,all of the tar, the tar oil naphtha, and naphtha will have been collected and stored for by-product value. Gas liquor streams will contain all of the ammonia and phenols that are produced in gasification. In addition to these by-products, the gas liquor will also contain carbon dioxide, hydrogen sulfide, trace quantities of hydrogen cvanide, and other trace components.

The incoming gas liquor stream is filtered to remove suspended matter such as coal dust and ash. Disposition of the filtered solid material may be a problem as it will be contaminated with traces of materials from the gas liquor. The liquid is then mixed with an organic solvent (isopropyl ether) in an extractor in order to dissolve the phenol. The Phenosolvan process is an integral part of the gas liquor treatment section. The phenol solvent mixture is collected and fed to solvent distillation columns where crude phenol is recovered as the bottom product, and the solvent as the overhead product. The solvent is then recycled to extractors after removing some of the contained water. The raffinate is stripped with fuel gas to remove traces of solvent which are picked up in the extraction step. The fuel gas is scrubbed with crude phenol product to recover the solvent. Finally, the phenol solvent mixture is distilled in the solvent recovery stripper to produce the crude phenol product, and the solvent is recycled to the extraction step. The solvent free raffinate is heated and steam stripped to remove carbon dioxide, hydrogen sulfide, and ammonia.

The effluent stream from the steam stripper is air cooled and sent to the deacidifier reboiler. The carbon dioxide and hydrogen sulfide coming off the reboiler are recompressed and treated in the Rectisol process. The ammonia is collected as a 24.1 wt % aqueous solution. Some of the vent gas associated with collecting the ammonia in solution is sent to incineration. The bottoms from the steam heated ammonia stripper go to the effluent water treatment section after air cooling.

The effluent water treatment system, biological treatment (biox), is used to reduce the phenol and ammonia concentrations in the effluent from the gas liquor so that the water can be reused as cooling tower make-up. The biox system is also used to treat sanitary sewage discharge and discharge from the API separator. Approximately 2900 gpm of effluent come from the gas liquor treatment area,and 110 gpm come from all the other feed streams. These two streams are treated in series. The first section treats the gas liquor effluent in an aeration basin followed by a settling basin. The second section treats the effluent from the first section,as well as the 110 gpm from all other streams in the same way. Thus, the second treatment area acts as a

polishing section for the effluent water treatment plant. The purified liquid from the polishing settling basin is filtered and sent to the cooling tower sump.

A.3.3.7 Ash Disposal

Dry ash produced from both the oxygen blown gasifier and the air blown gasifier is quenched with demineralizer blowdown water. The water is used to reduce the ash temperature and to avoid dust problems in transporting the ash. Quenched wet ash is sent from the ash hopper through a drag conveyor to the belt conveyor for ultimate disposal to the mine. Additional ash slurry that is carried with the steam produced in the quench goes to a bin lock condensor as well as to a cyclone separator, followed by a droplet separator, and finally through an ash slurry thickener. The de-watered ash is then conveyed back to the mine on the belt conveyor together with the ash from the ash hopper. A total of 466,700 lb/hr of wet ash is transferred. Of that amount roughly 73,000 lb/hr is water, 20,000 lb/hr is the equivalent of dry ash free coal, and 374,000 lb/hr is ash. The sulfur content of this material is approximately 0.05%. In addition to the ash, some spent chemicals and sludge from the water effluent treatment plant are also sent to the mine for burial. The total quantity of additional material will not add more than 0.5 wt % to the mass going back to the mine.

A.4 CO_2 Acceptor Process

A.4.1 General

This process makes synthetic natural gas (SNG) from lignite by gasifying it with steam at 1500°F and 150 psig. Heat is supplied indirectly by circulating dolomite which also takes up CO_2 and sulfur. After clean-up to remove dust and sulfur, the gas is methanated, giving a heating value of 952 Btu/cf HHV. Since the gas fed to methanation has a high hydrogen content, it requires no shifting or CO_2 removal ahead of the methanator. It is compressed and dried to meet pipeline requirements. Figure A.4.1 shows the general flow diagram of the CO_2 acceptor process.

A.4.2 Main Gasification Stream

The plant is sized to make 250 x 10^9 Btu/day of synthetic natural gas having a higher heating value of 952 Btu per cubic foot (262.6 MM scfd). Total consumption of lignite is 28,517 tpd of 33.67% moisture content. The preheated lignite fed to the gasifier contains .90% sulfur, 11.45% ash, and has a higher heating value of 11,120 Btu per pound.

A.4.2.1 Coal Preparation

Large storage piles are needed in view of the high lignite consumption rate. Tamping down of the storage pile as it is being formed is one customary precaution to prevent dusting and fires, but facilities and plans are also needed for extinguishing fires if they occur.

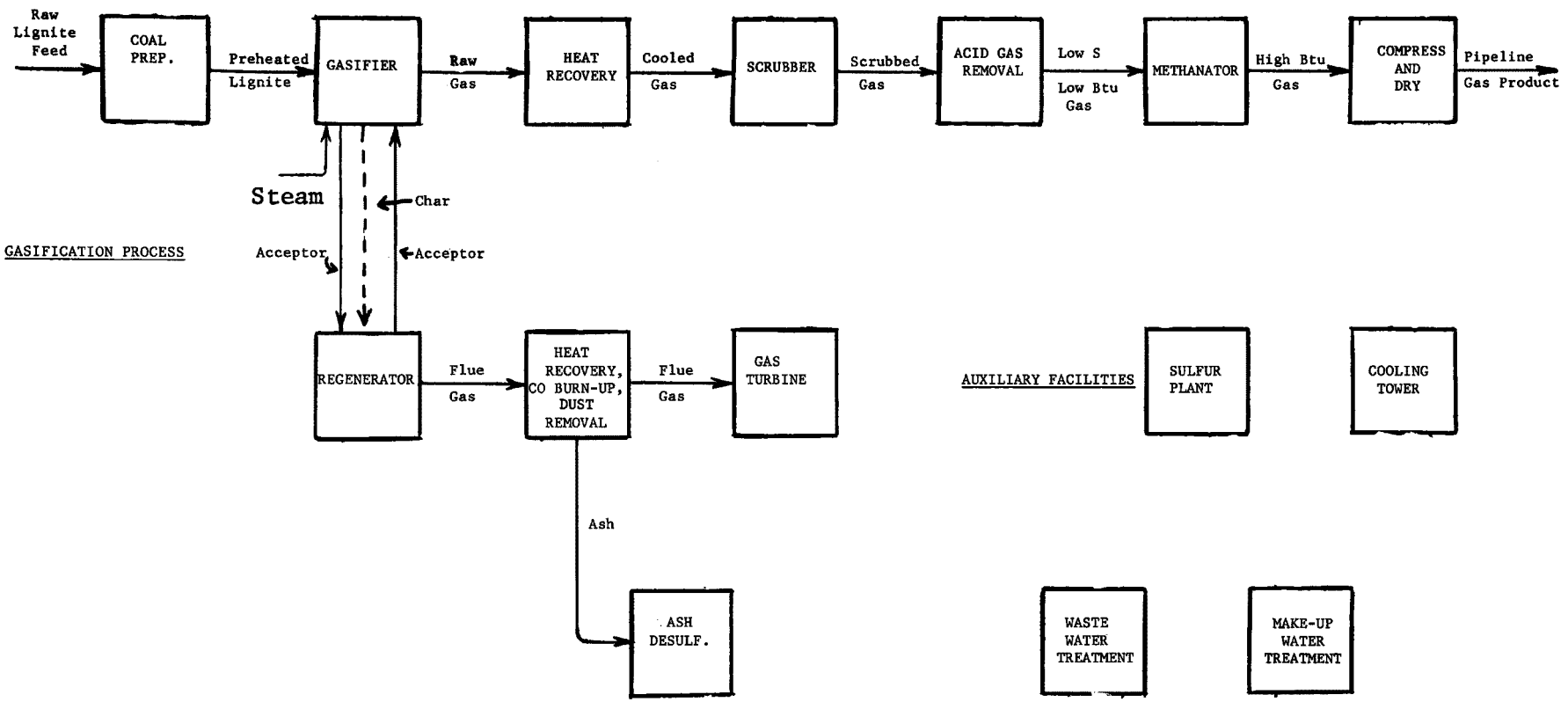

Figure A.4.1

CO_2 Acceptor Process

In the coal drying system, hot combustion gas is contacted with the lignite feed. General requirements are that the hot gas must be introduced at less than 1000°F so that local over-heating does not occur and release a large amount of volatile material from the lignite. Also, oxygen content of the gas is held down to about 11% or less by recycling flue gas in order to meet safety requirements.

Sulfur emission from the coal preparation section is decreased primarily by using some desulfurized low Btu gas from the gasification section as fuel to the furnaces. This gas is not methanated but rather is drawn off after acid gas removal.

To bring total sulfur emission down to the target 1.2 lbs SO_2 per MM Btu requires replacing 25% of the lignite fuel with gas, corresponding to 1.0 MM scfh or about 2.6% of the total gas made by gasification. For simplicity, flue gas from the regenerator has not been added to the coal preparation system. Instead, flue gas from the dryer is recycled through the furnaces to lower flame temperature and thereby reduce NO_x formation.

Cyclones are used to separate ash from the hot gas after the furnace. The hot gas of course picks up lignite fines in passing through the drying and grinding operation, therefore, bag filters are provided on the vent gas streams in order to recover all dust.

Separate bag filters are provided on the preheater. This operation consumes only 12% of the total fuel for coal preparation, and only gas fuel is fired to it. Consequently, all of the fines recovered from the gas leaving the preheater are pure lignite and can be used as fuel for the furnaces if desired.

To minimize loss of fines in the dryer, it can be operated on a relatively coarse crushed lignite of say 1/2" size. Then the fine grinding can be carried out after the dryer and before the preheater. With this arrangement the very fine lignite is exposed to a smaller volume of gas so that the problem of dust recovery is minimized.

A.4.2.2 Gasifier

A stream of reject acceptor leaves the gasifier at 1500°F, cooled by a fluid bed cooler that allows generating steam for use in the gasifier. Final cooling uses a small amount of water that is evaporated to dryness so that the material is not wetted.

A.4.2.3 Gas Cleaning

Raw gas leaves the gasifier through cyclones which remove most of the solids. It is cooled in a waste heat boiler to make steam, and then scrubbed with water to remove essentially all of the dust using Venturi type scrubbers operating at the dew point and evaporating a small amount of water. The gas is further cooled to 150°F in air-fins so as recover condensate and conserve cooling water.

A.4.2.4 Acid Gas Removal

The raw gas contains 330 ppm of sulfur, mainly as H_2S. Sulfur removal is required before methanating, but it is undesirable to remove much CO_2 because it is needed to consume the available hydrogen during methanation. Various processes have been reported that remove concentrated streams of H_2S while allowing most of the CO_2 to pass through the absorber system. A major problem in most gasification systems is obtaining a CO_2 stream free from sulfur that can be vented. In the present case the sulfur only has to be removed to a level sufficiently low to prevent overloading the zinc oxide guard boxes.

Consideration should be given to using an absorption/oxidation process, such as Stretford, Takahax, IFP etc., on the raw gas directly. This would remove H_2S only and convert it to sulfur product without removing CO_2.

As an alternative, it may be possible to take low sulfur ash from the ash desulfurizing system and add it to the scrubber water so as to pick up sulfur. Sulfur-containing ash could then be returned to the ash desulfurizing system for regeneration.

A.4.2.5 Methanation and Compression

Final clean-up of the gas is accomplished in a bed of zinc oxide before methanation, to remove traces of sulfur and dust which could foul the catalyst. There may be traces of tar fog, naphthalene, etc. present in the gas, in which case it would be desirable to include a guard bed of activated carbon. Methanation itself generates no effluents to the air. After methanation the gas is compressed to 1000 psig and dried, for example with glycol, before being sent to the pipeline.

A.4.2.6 Regenerator

The circulating dolomite is calcined at 1850°F to remove CO_2. Make up dolomite is also added and calcined. Heat is supplied by burning the required amount of char with air in a fluid bed regenerator operating at 150 psig. A small content of carbon monoxide is maintained in the outlet gas in order to avoid forming oxidation compounds of calcium which were found to cause deposits. The flue gas is removed through cyclone separators to take out most of the dust, consisting of ash residue from all of the lignite fed to the gasifier. This ash is removed from the system by way of a fluid bed cooler, and sent to the ash desulfurizing unit.

Gas from the cyclones passes to heat exchangers where steam is super-heated to 1200°F. Additional steam is then generated in a waste heat boiler. At an appropriate point in this system additional air can be added to burn up residual carbon monoxide (e.g. before the waste heat boiler). This is necessary to avoid releasing carbon monoxide to the atmosphere, and at the same time it provides a convenient way to recover high level heat by burning the carbon monoxide. It is known that this reaction is reasonably fast at temperatures above 1300°F.

The reaction raises the gas temperature by about 300°F, which still leaves it lower than the regenerator temperature of 1850°F, consequently, deposits should not be a problem.

Flue gas then goes to an expansion turbine to recover power. For a turbine inlet temperature of 1000°F or higher, enough power can be generated to drive both the air compressor and the product gas compressor. In fact, there may be excess power available. Noise control for this area needs careful attention in a final plant design.

The flue gas contains 470 ppm of total sulfur, and can be discharged to the atmosphere, assuming that the dust content, nitrogen oxides, and odor are acceptable. Further information is needed on these critical items. The NO_x content may be low, in view of the relatively low combustion temperature in the regenerator, but specific data should be obtained on this in the pilot operations. For treating the ash to remove sulfur, a stream of CO_2 is needed, which might be provided by scrubbing part of the flue gas.

A.4.2.7 Ash Desulfurizer

Ash produced from the coal is processed to give 98% sulfur removal by reacting it in a water slurry with CO_2 at 190°F. Off-gas containing a calculated 27% H_2S, 7% CO_2 and 66% H_2O is sent to a sulfur recovery plant such as a Claus, Stretford, or other type unit. All of the gas streams in this system are contained and should not cause environmental problems. The carbonated ash is withdrawn as a 50% slurry in water and is not expected to create odors, although this should be checked out. CO_2 required for this operation is 1530 moles/hr, including 25% excess over theoretical and can be provided from the regenerator flue gas.

A.4.3 Auxiliary Facilities

In addition to the basic process, auxiliary facilities are required which will now be discussed.

A.4.3.1 Sulfur Plant

H_2S streams from acid gas removal and from the ash desulfurizer go to a sulfur recovery plant. If a Claus plant is used, sulfur recovery of about 97% can be achieved with three stages in "straight-through" flow. The tail gas still contains about 3 tons per day of sulfur and might be cleaned up, although this gas volume of 20 MM cfd is small relative to the other effluents. In fact, in this process as opposed to others, the sulfur in the Claus tail gas represents such a small percentage of emitted sulfur that investments or costs for sulfur removal could best be spent cleaning the regenerator flue gas or dryer vent gas. Thus, the Claus tail gas could be incinerated and vented to the dryer stack and a small additional quantity of clean product gas added as fuel to decrease total sulfur emissions to acceptable levels. No specific preference is indicated for sulfur recovery.

A.4.3.2 Utilities

Net utility requirements are low because considerable power is recovered by passing the regeneration flue gas through an expander turbine. Also a large amount of heat is recovered in waste heat boilers to generate steam, and on the methanator where the heat released by reaction amounts to about 19% of the heating value in the entering gas. Most of this can be converted to steam by recirculating gas from the reactor through waste heat boilers. Under development are alternative techniques using a fluid bed or liquid slurry reactor that should be more efficient.

A utilities balance for the process indicates that the process is self-sufficient in steam and power, so that no utility boiler is required for normal operation. It is likely that a more definitive and optimized utility balance will show that it is possible to make more steam and power than consumed by the gasification plant, so that these could be used for shops, mining operations, offices and general off-sites. For example, 1.65 million pounds per hour of steam at 150 psig is used in the gasifier. This could be generated at a higher pressure such as 600 psig and run through bleeder turbines down to 150 psig, while generating by-product power at the rate of about 40,000 kW.

In the utilities area, the main cooling tower has by far the largest volume of discharge. It is, therefore, critical from the standpoint of pollution. In this particular case it is not expected to contain significant amounts of undesirable contaminants. The cooling water circuit is clean and should not contain ash or objectionable materials such as phenols, oil, or H_2S. Normally a certain amount of leakage can be expected on exchangers using cooling water. Since the process operates mainly at 150 psig pressure, this should not be a major item. Also, most of the cooling water is from steam condensers on drivers rather than on oil, sour water, etc.

Total cooling water requirement is modest considering the plant size. Effluents to the air from this cooling tower amount to 457,000 lbs/hr of water evaporated, plus 43,000 lbs/hr of estimated drift loss or mist. Flow of air through the tower is 15,000 MM cfd.

The drift loss or mist will contain dissolved solids which can result in deposits on the ground and on nearby equipment, and in some cases drift loss has caused icing problems on equipment and public roads in the winter. With any cooling tower, the problem of fog formation must be assessed, since under certain conditions the moisture condenses and the resulting plume can be a problem if it affects public highways. Reheat of the stack gas is one way to reduce fog formation, but is inefficient. In planning the layout of the plant facilities, these aspects should be given careful consideration, and every effort made to avoid potential problems by proper placement of the equipment.

There will also be evaporation and the possibility of odor from ponds and water treating facilities. While most of the ammonia will be recovered as a by-product, the waste water still will contain traces of ammonia and probably also some phenols, hydrocarbons, etc. particularly during start-up or during upsets. These must be controlled and a biological oxidation (biox) pond for waste water treating is needed. Depending upon pilot plant results with regard to tar and hydrocarbons produced, it may be necessary to provide an oil separator ahead of the biox unit, and possibly a froth flotation separator.

A.5 BIGAS Process

A.5.1 General

The plant is sized to make 250 million scfd of pipeline gas by gasifying coal with steam and oxygen. The design includes shift conversion and methanation to give a gas with a heating value of 943 Btu per cubic foot, available at 1,075 psia. Western Kentucky coal is used, and after cleaning and washing, the amount if 14,535 tons per day (at a nominal 8.4% moisture) which provides all of the fuel for coal drying and utilities production in addition to the gasification requirements.

A flow plan of the process is shown in Figure A.5.1. It is convenient to subdivide the process into the following operations, each of which will be described in the following subsections: (1) Coal Preparation, (2) Gasification, (e) Quench and Dust Removal, (4) Shift Conversion, (5) Acid Gas Removal, (6) Methanation, and (7) Auxiliary Facilities.

A.5.2 Main Gasification Stream

A.5.2.1 Coal Preparation and Drying

This process section includes crushing, cleaning and drying as well as a storage pile with 30 days capacity. Run of mine coal feed amounts to 23,243 tons per day. This is crushed and coarse refuse is rejected amounting to 4,804 tons per day. The coal can then be sent to storage, or to the washing operation which rejects an additional 3,904 tons per day. Drained coal from washing, containing 8.4% moisture, is used partly as fuel to the utilities plant supplying steam for the process, while the remainder goes to the grinding and drying facilities. Here it is ground to 70% smaller than 200 mesh, dried to 1.3% moisture, and sent to storage silos. Some of the dried coal is used as fuel in the dryer, amounting to 11,137 pounds per hour or about 134 tons per day.

Since the gasifier operates at 80 atmospheres, it is necessary to pressurize the coal feed. The original design used piston feeders to push the coal into a high pressure feed hopper and is the system used in the present environmental evaluation. Subsequent work has indicated that other methods such as lock hoppers or slurry feeding may be preferable; however, the change would make only minor modifications in effluents to the environment, although thermal efficiency would be lower than for the case using piston feeders.

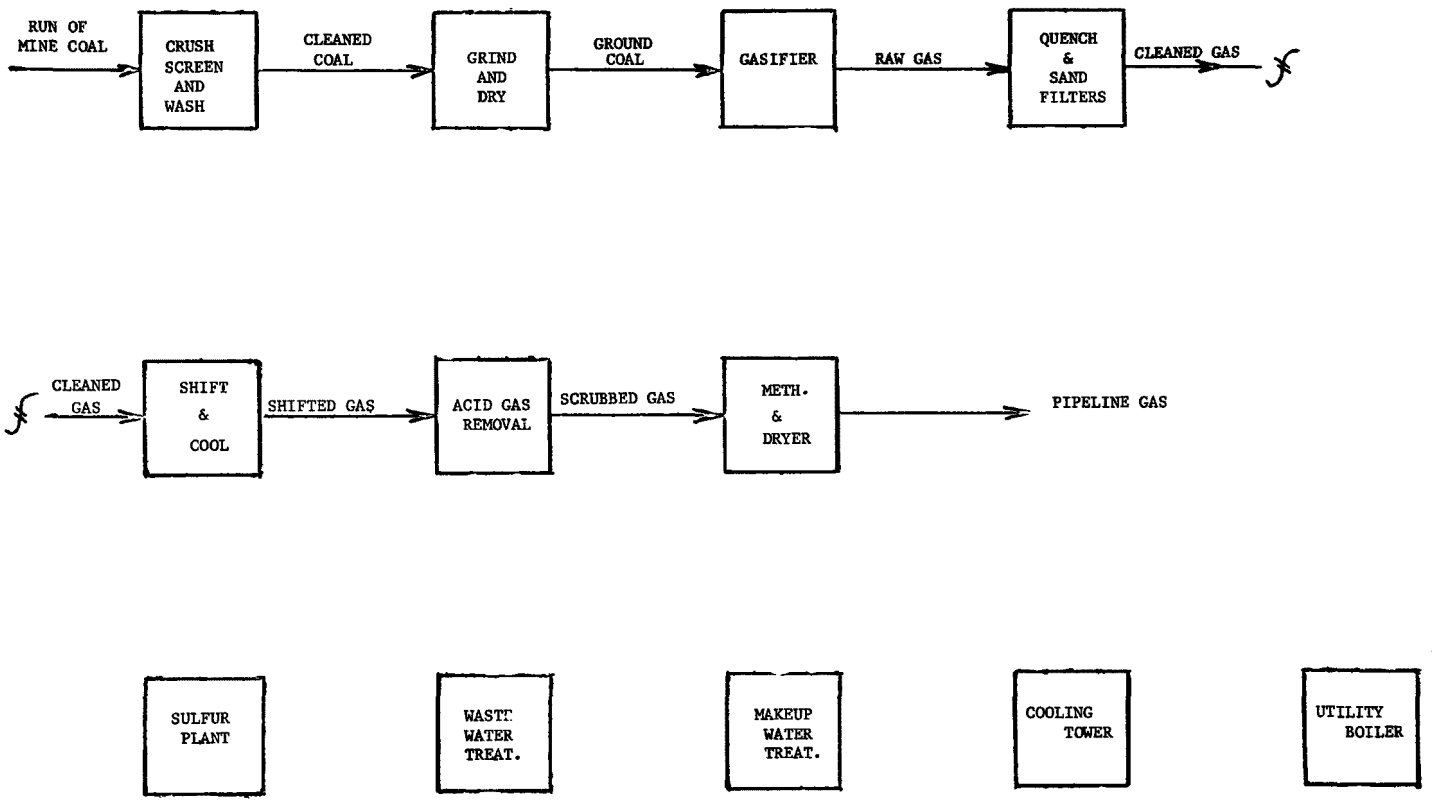

Figure A.5.1

BIGAS Process

A.5.2.2 Gasification

The coal is gasified using steam and oxygen in a two zone reactor at 80 atmospheres. Operation of the reactor is based on entrained flow rather than using a fluidized bed or fixed bed reactor. Coal is fed to the top 1700°F zone where it mixes with steam and hot synthesis gas entering from the lower zone. Conditions in this upper zone favor high formation of methane, with negligible amounts of tar or oil. Although the volatile content of the coal feed is completely consumed, there is considerable unreacted char remaining which is carried out with the gas and recovered by cyclones following the reactor.

The char is recycled by means of lock hoppers to the lower gasification zone where it is reacted with steam and oxygen at 3000°F. A special char feeding system is provided, since it is indicated that a reliable and very uniform feed rate must be maintained, so as to avoid conditions that could give excessive flame temperatures. Synthesis gas is formed and passes to the upper reactor as described earlier. Slag is withdrawn from the bottom, quenched with water, and removed by way of lock hoppers. Since it has little or no combustible content, it can be discarded (from an energy viewpoint).

A.5.2.3 Quench and Dust Removal

Hot raw gas from the gasifier passes to cyclone separators which remove most of the char and solid particles in the gas. Quench water is added to the cyclone in order to moderate the temperature, and additional quench water is added in a quench vessel after the cyclone separator.

The quenched gas still contains some dust that was not removed by the cyclones, but must be removed so as not to plug the fixed bed of shift conversion catalyst. Rather than scrub the dust out with water, which would require considerable cooling, the dust is filtered out at high temperature using sand beds. These operate in parallel in a cyclic manner. Pressure drop will build-up during the onstream cycle, and the bed is cleaned when necessary by back flushing with clean gas so as to lift and agitate the sand particles. Entrained dust from back flushing is then returned to the gasifier where it leaves with the slag.

A.5.2.4 Shift Conversion

After dust removal, the gas next goes to a shift converter where carbon monoxide reacts with steam to form hydrogen and carbon dioxide, incre- the ratio of H_2 to CO to three to one as required in the final methanation. A sulfur resistant shift catalyst must be used, resulting in relatively low activity compared to those used on sulfur free gases. A large excess of steam is maintained to give 50 mol. % steam in order to facilitate the desired reaction and to prevent catalyst degradation or carbonaceous deposits. Steam conversion in this shift reactor is about 27%.

After shift conversion, the gas is cooled to remove most of the remaining moisture. This, of course, produces sour water containing H_2S

and ammonia and possibly traces of cyanides, phenols, etc. It is conveniently disposed of by using it as part of the quench water, and thereby provides steam required for shift conversion. One advantage of this specific design is that a very large quantity of sour water can be disposed of by injecting it into the hot gas for quenching. A further advantage is that no facilities are then needed for generating steam used in shift conversion, and neither are exchangers needed for cooling the hot raw gas from the gasifier.

A.5.2.5 Acid Gas Removal

Removal of all sulfur compounds is needed to meet pipeline gas specifications and to protect the methanation catalyst. The bulk of the sulfur, as well as CO_2, is removed using the proprietary Benfield process based on hot carbonate scrubbing. Two separate absorber towers are used in series. The first of these produces a gas relatively high in sulfur content, about 8% H_2S, to facilitate sulfur recovery in the Claus plant. The second absorber is for final cleanup of sulfur from the gas and for CO_2 removal.

Most of the CO_2 is removed in this second absorber and vented to the air; however, this CO_2 vent stream contains excessive amounts of H_2S, namely 3400 ppm, and further processing is needed to clean it up. Therefore, adsorption using molecular sieves has been provided to recover the H_2S content and send it to the Claus sulfur plant. Gas leaving the hot carbonate scrubbing system used in the present design contains moisture, most of which is removed by cooling the gas ahead of methanation. This is a clean condensate which can be used for boiler feed water make-up.

Gasification can produce many compounds in addition to H_2S, such as cyanides and thiocyanates as well as large amounts of ammonia. There are also various sulfur compounds, particularly carbonyl sulfide and some carbon disulfide. It is essential to completely remove all of these before methanation in order to protect catalyst activity. Most of the ammonia and compounds that are highly soluble in water will be removed in the condensation after shift conversion. Hot carbonate systems for acid gas removal have the important advantage that they do remove carbonyl sulfide. Amine systems, in general, do not remove carbonyl sulfide, and moreover react irreversibly with cyanides thus requiring purge of the chemical solution.

A.5.2.6 Methanation and Drying

Clean synthesis gas is methanated in this section to increase the heating value of the gas up to pipeline quality. The reaction of CO with 3 volumes of H_2 to make methane and water can be carried out in a fixed bed of nickel catalyst. A guard bed of zinc oxide ahead of the reactor removes traces of sulfur compounds in order to protect the methanation catalyst. Methanation is a highly exothermic reaction, releasing about 20% of the heating value in the reacting gases. Reactor temperatures of 500°F at the inlet and 850°F at the outlet are maintained by recirculating some of the gas leaving the reactor through exchangers

to generate high pressure steam. Methanation is carried out to a high conversion so that the residual CO content is no more than the 0.1 Vol. % specified for pipeline quality gas. Residual hydrogen content is 5.1 Vol. %. Since methanation generates a considerable amount of water, this is recovered as clean condensate upon cooling. More complete drying of the gas is then carried out using a glycol system to meet the requirement of 7 lb water maximum per MM scf in gas.

A.5.3 Auxiliary Facilities

In addition to the gasification system, auxiliary facilities are needed to make the plant complete and self-sufficient. A Claus plant is included to make by-product sulfur from the H_2S that is recovered in acid gas removal. The basic Claus plant will not give adequate sulfur recovery or clean-up, since the feed gas will contain no more than 15% H_2S, therefore tail gas clean-up was added.

A conventional air separation plant is included in the base design to provide oxygen needed for gasification. It does not generate contaminated waste streams, but it is a large consumer of utilities and therefore has an important effect on thermal efficiency.

As would be expected, the process uses large amounts of steam and electricity. All utilities needed to make the plant self-sufficient are provided in the design, including high pressure and low pressure steam, electric power generation, water make-up treating, circulating cooling water, and waste water treating. Fuel requirement for these has been been included on the basis that coal would be used for fuel. Since the coal has a high sulfur content, pollution control will be needed on these fuel consumers. The simplest approach is to add flue gas clean-up so that coal can still be used as fuel, and a number of processes are available. An alternative would be to use low sulfur, low Btu gas made in the process for fuel in utilities generation and in coal drying.

The particular study includes utilities requirements for offices, shops, laboratories, and cafeteria (e.g. 50,000 lb/hr of steam for heating buildings). These are not always included in similar studies of other processes; therefore, caution is required in making comparisons with other studies.

A.6 HYGAS Process

A.6.1 General

The process makes 250 MM scfd of pipeline gas (SNG) from Illinois No. 6 coal by gasifying it with medium Btu gas (mainly CO plus H_2 and steam) in a series of countercurrent fluidized zones. Residual char is then gasified with oxygen and steam in a bottom zone to provide gas for gasification in the upper zones. Carbon content of the rejected char may be 10-30 wt. %.

Raw gas is cleaned-up, shifted, and methanated. Operating pressure is sufficiently high so that compression of the product gas is

avoided. The method of pressurizing coal feed involves slurrying it with light oil by-product, pumping to high pressure, and evaporating the slurry to dryness by direct contact with hot raw gas in a fluidized bed.

A block flow diagram of the processing steps is shown in Figure A.6.1. The process can conveniently be sub-divided into a sequence of operations, each of which will be described in the following sub-sections: (1) Coal Preparation, (2) Gasification, (3) Quench and Dust Removal, (4) Shift Conversion and Cooling, (5) Acid Gas Removal, (6) Methanation and (7) Auxiliary Facilities.

A.6.2 Main Gasification Stream

A.6.2.1 Coal Preparation

These facilities include storage and handling, crushing, and drying. It is assumed that cleaned coal is delivered, the separation of refuse and washing having been done at the mine or elsewhere with suitable disposal of waste, and environmental controls. Coal feed, amounting to 17,517 tons/day (6.48% moisture), is received and 30 days storage is provided. Since the storage pile is very large, roughly 15 acres at 25 ft high, protection will be needed to control dust nuisance due to wind, while rain run off should be collected and cleaned up to supply makeup water for the plant.

Crushing is the next step in coal preparation, to reduce the coal feed to minus 8 mesh. Crushed coal is then dried to negligible moisture content in a fluid bed drier fired with part of the low Btu gas produced by the U-Gas system. The latter also supplies clean gas fuel for generating utilities, and consumes 22.5% of the total coal used by the plant.

Dried coal going to gasification is pressurized by mixing with oil to form a slurry which is pumped to about 1200 psia. Theoretical power for pumping is about 4500 horsepower. Oil is vaporized and recovered when the slurry is subsequently dried. Sufficient oil is thereby recycled to give a slurry containing 35% coal/65% oil, and cooling is provided so that temperature of the recycle oil is 400°F.

It should be emphasized again that this specific study case does not include pretreating to destroy caking properties of the coal feed.

A.6.2.2 Gasification

The HYGAS reactor has four zones, through which the coal passes. These include an initial drying zone, followed by gasification zones at increasing temperature and severity. Slurry feed is dried in the first zone at 600°F using heat in the raw gas. Vaporized oil is condensed and most of it is recycled to slurry preparation, but part of it is withdrawn as net product.

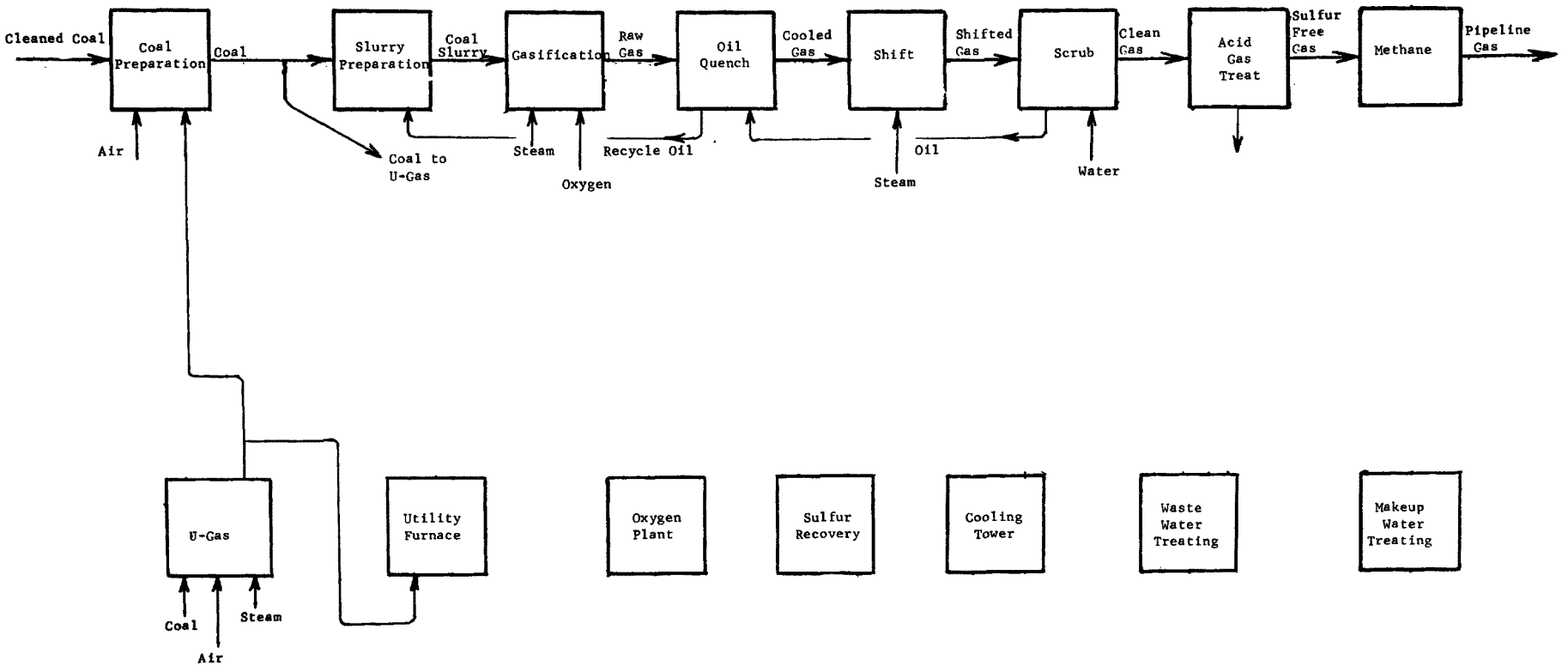

Figure A.6.1

HYGAS Process

Dry coal then flows to the next bed at 1250° where partial gasification occurs, then to a bed at 1750°. Finally the char passes to the bottom zone where steam and oxygen are added for final gasification. Residual char rejected from this lower zone may contain 10-30% carbon, corresponding to 2-7% of the original carbon contained in the coal feed. The char is slurried in water, depressured, and discharged through lock hoppers.

The countercurrent contacting between gas and char provided by this multibed arrangement results in a considerable saving in oxygen. Of the total methane in the product, 58% is formed in the gasifier by the favorable effects of high pressure, temperature gradient, and the contribution from volatile matter in the coal feed.

A.6.2.3 Quench and Dust Removal

Raw gas leaving the drying bed of the gasifier at 600°F, is cooled to 400°F by contact with a recirculating oil stream, whereby most of the oil is condensed out and returned to slurry preparation. Temperature is maintained high enough to avoid condensing water which could cause emulsion problems; moreover, the steam is needed for the subsequent shift reaction. Heat removed in this cooling operating can be used to generate low pressure steam by recirculating the 400°F oil through waste heat boilers.

When the oil is condensed upon cooling, most of the dust in the raw gas leaving the drying bed will also be removed. Since the condensed oil is recycled and used for slurrying coal feed, the fines will also be recycled and buildup in concentration, unless some provision is made to purge them from the system.

A.6.2.4 Shift Conversion and Cooling

The next step in gas handling is shift conversion, to react part of the CO with steam and thereby increase the H_2/CO ratio to 3/1 as needed for methanation. A sulfur resistant shift catalyst such as cobalt-molybdenum is used, and one-third of the raw gas bypasses the catalytic reactor. The catalyst is also exposed to oil vapors contained in the gas, and operates at about 700°F.

After shift conversion, the gas is cooled to condense most of the moisture. This sour water is cleaned up for reuse by extraction and stripping, which operations will be described later.

A.6.2.5 Acid Gas Treatment

At this point, the gas still contains various contaminants that must be removed, such as: H_2S, COS, CO_2, and condensable hydrocarbons. The required cleanup is accomplished by scrubbing with refrigerated methanol, using the Rectisol process. Gases containing the sulfur compounds removed in the Rectisol unit are sent to a Claus plant for sulfur recovery. The Claus plant also provides incineration of COS and combustibles on this stream.

Most of the CO_2 is removed as a separate stream in the Rectisol regeneration, and indicated to be discharged to the atmosphere. However, this vent stream is shown as containing over 2.0 vol. % of combustibles, most of which is ethane; consequently, it will require further cleanup or incineration. While sulfur content is indicated to be low, nil H_2S and 30 ppm COS, other detailed evaluations of similar Rectisol applications show that additional controls will be needed.

It is not clear that any one simple process for acid gas treatment available today can simultaneously meet the targets of a highly concentrated stream to the sulfur plant, together with a CO_2 waste stream that is clean enough to discharge directly to the atmosphere, without further treatment such as sulfur cleanup or incineration. Therefore it appears that additional facilities will be needed, such as adsorption by molecular sieves or activated carbon.

A guard bed, for example of zinc oxide, is used to remove remaining traces of sulfur in the clean gas, so as to protect the methanation catalyst, which is extremely sensitive to sulfur poisoning. Reheating is needed since the guard bed operates at about 600°F, and can be provided by heat exchange with gas leaving the methanator. Such preheat is also needed to initiate the methanation reaction when this is carried out in a fixed bed of catalyst.

A.6.2.6 Methanation and Drying

Fixed bed catalytic reactors with conventional nickel base catalyst are used to react CO and H_2 to form methane and water. Operating temperature is 550-900°F. Outlet gas at 900°F is recycled to the inlet through waste heat boilers which generate steam, thereby recovering the large exothermic heat of reaction. Heat release amounts to 954 MM Btu/hr, which can generate about 1 million lb/hr of high pressure steam.

Water formed by the methanation reaction is condensed and recovered when the product gas is cooled, providing 200,000 lb/hr of clean condensate suitable for boiler feed water makeup. Final drying of the gas is effected by scrubbing with glycol, to meet pipeline specifications of 7 lb/MM scf. The product specification of 0.10 vol. % CO maximum is met by providing effective control of methanation and excess hydrogen, leaving 6.5 vol. % hydrogen in the product gas. High heating value is then 960 Btu/cf.

A.6.3 Auxiliary Facilities

To make the plant complete and self-sufficient, various utilities and auxiliary facilities are needed in addition to the main gasification process. A Claus plant is used for sulfur recovery on a concentrated stream from acid gas removal, with tail gas cleanup by incineration followed by scrubbing with sulfite to remove SO_2, using the Wellman-Lord process. The Rectisol design basis provided shows 29.8 vol. % H_2S in the feed to the Claus plant, while at the same time the CO_2 vent gas contains no H_2S and 300 ppm of carbonyl sulfide. This would represent a very desirable high concentration of feed to the sulfur plant together with complete removal of H_2S from the CO_2 vent gas, although the latter contains an excessive amount of COS plus 2 vol. % combustibles, so it would require further treatment. However, other data on similar designs do not support the excellent separation assumed in the HYGAS design; consequently further investigation and evaluation are called for.

Oxygen for gasification is supplied by a conventional air separation plant. While it does not generate contaminated waste streams, it is a large consumer of utilities, with a correspondingly large impact on thermal efficiency for the overall process.

Large amounts of steam and power are needed in the process. These are supplied by a utilities system fired with clean gas fuel manufactured by the U-Gas process being developed by The Institute of Gas Technology.

In the U-Gas process, coal feed goes first to a pretreating reactor to destroy caking properties. Here it is contacted with air at 750-800°F in a fluid bed to give partial oxidation, accompanied by a decrease in volatiles. A very large amount of heat is released, which is used to generate steam. Hot char then goes to a second reactor where it is gasified with steam and air at 1800°F and 300 psia in a fluid bed. Off gas from pretreating, with a high heating value of only 39 Btu/CF, contains tar and sulfur, so it is mixed with hot gases from the gasifier in order to destroy the tar.

Sulfur removal is provided at high temperature by contacting the gas with a "molten metal," which is regenerated in a separate zone by reacting with air to form a concentrated SO_2 stream that is sent to the sulfur plant.

After further clean up by cooling to condense water and by scrubbing, the gas is used as clean fuel for coal drying, furnaces, and gas turbines.

A combined cycle system is used to maximize efficiency by first burning the high pressure fuel gas from the U-Gas unit for use in a gas turbine, and then discharging the hot exhaust to a boiler furnace which supplies process steam. Combined cycle systems are a very effective way to supply by-product power for the oxygen plant compressors and for generating electricity.

Water treatment is an important part of the process. A Phenosolvan unit is used in water treatment. Treated water from the Phenosolvan unit then passes to a sour water stripper which removes ammonia as a by-product, and H_2S which is sent to the sulfur plant.

Other auxiliary facilities include treatment of makeup water, boiler feed water preparation, storage of by-product oil, phenol, ammonia, and sulfur, as well as ash disposal, and a cooling water circuit with cooling tower. The waste water is treated in a biox unit before sending it to cooling tower makeup.

A.7 U-Gas Process

A.7.1 General

In the U-Gas process, pretreated coal is gasified with steam and air in a fluidized solids system, at 1900°F and 350 psig to make 840 MM scfd of low Btu clean gas fuel (158 Btu/scf) suitable for use in a combined cycle power plant. Coal feed amounts to 7346 tons/day containing 6% moisture.

A.7.2 Main Gasification Stream

As shown in Figure A.7.1, dry coal crushed to 1/4 inch and smaller is fed to the pretreater by means of lock hoppers. Gases from the pretreater flow into the gasifier at a point above the fluid bed, for the purpose of reacting and destroying all tar and oil vapors that are evolved in pretreating. A residence time of 10-15 seconds is provided on the vapors.

In the fluid bed gasifier operating at about 2 ft/sec, char is reacted to give a carbon level of about 20% in the ash. Agglomeration of ash particles is accomplished in a "spouting" zone or venturi throat at the bottom of the gasifier maintained at sintering temperature by adding air and steam. Ash agglomerates of perhaps 1/8 inch diameter pass down through this throat, to be quenched and removed from the system. Dust recovered by cyclones from the raw gas product is also passed through the agglomerating zone.

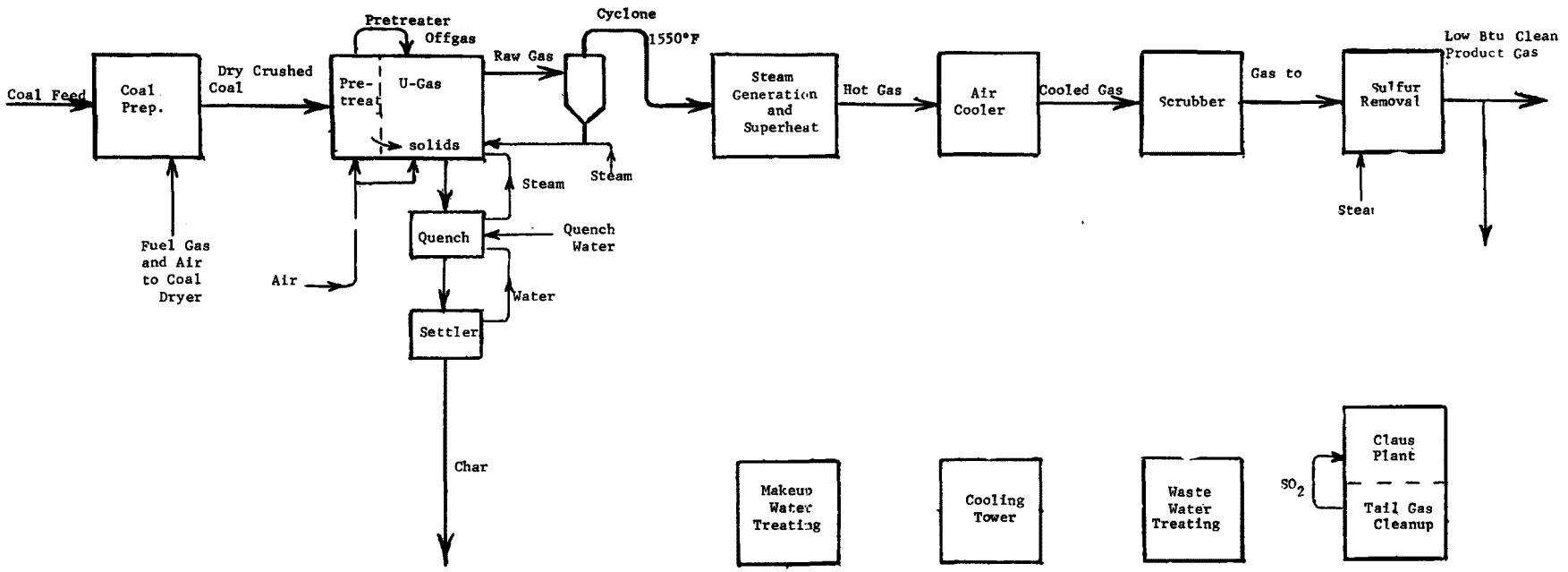

Figure A.7.1

U-Gas Process

Raw gas is cooled in a waste heat boiler to make high pressure steam, following by additional heat recovery to preheat boiler feed water. Air cooling is then used to bring the gas down to scrubbing temperature. The water scrubber removes dust and ammonia primarily, together with unreacted steam. Gas liquor from the scrubber is processed in a sour water stripper to recover ammonia and remove H_2S. The treated water is recycled to the cooling tower or used to slurry the ash being returned to the mine for disposal.

In this particular design, water is indicated to be recycled to extinction within the process, in which case there would be no net water discharge that might cause environmental concern. However, there will be soluble salts (e.g., sodium chloride and sulfate) introduced with the makeup water, plus volatile elements from gasification (chlorine, fluorine, boron, etc.) that will accumulate and must be purged from the system. It is obvious that some water must be discharged.

Sulfur is removed from the cooled gas using the Selexol process based on a glycol type solvent, which can remove H_2S and COS from the gas. About 60% of the CO_2 is left in the gas, but the solvent does dehydrate the gas.

Clean, low Btu gas from the Selexol unit is available to use as fuel, or in a combined cycle system. The H_2S stream from solvent regeneration is indicated to contain 16.6% H_2S, and is sent to a Claus unit for sulfur recovery. Tail gas cleanup by the Wellman-Lord process is included to give 250 ppm SO_2 in the final gas released to the atmosphere.

High heating value of the total gas produced is 5533 MM Btu/hr, but part of the gas is needed to supply requirements of the process. Net gas available from the process is 5060 MM Btu/hr, equivalent to a potential power generation of 593,000 KW at a nominal 40% efficiency. Of the total gas produced, 6.7% is consumed in the process to supply fuel to the coal dryer and tail gas incinerator on the sulfur plant, plus a combined cycle system supplying plant electricty and power for air compression. In addition, steam is generated from waste heat in the process, but all of this is used within the plant, partly to drive the air compressor.

A.7.3 Auxiliary Facilities

Auxiliary facilities are required in addition to the basic process, such as coal handling and storage. Coal preparation will include drying and crushing, as well as coal cleaning unless this is provided elsewhere. Ash handling and disposal are also needed, with means to drain the ash slurry, recover the water for reuse, and transport the drained ash to the mine or to a landfill area. The Claus plant for sulfur recovery includes tail gas cleanup by scrubbing with sodium sulfite using the Wellman-Lord process, but sulfur storage and shipping facilities are also needed.

Waste water treatment employs the Chevron process to recover by-product ammonia, and makes it feasible to reuse the water. While not included in the original design, a biological oxidation system (biox) is needed to give adequate cleanup of the water for return to the cooling water circuit. In addition, to prevent buildup of sodium salts etc., some water will have to be discharged from the plant.

The plant may be self sufficient in steam and power during normal operation, but in order to start it up a furnace or other method for heating is required, together with startup steam and power. Fuel for startup probably should be oil rather than gas or coal, so as to avoid the storage problem with gas, or the environmental problems with coal due to sulfur and ash.

Makeup water must be brought in and treated to make it suitable for use in the cooling water circuit, while further treatment and demineralization are required to supply boiler feedwater makeup. Cooling towers are used, and are a major area of environmental concern.

Other facilities required are maintenance shops, fire protection, warehouses, control laboratory, offices, cafeteria, roads, trucks, etc., all of which must be taken into account in assessing total environmental impact.

A.8 Winkler Process

A.8.1 General

Lignite type coal is gasified at about 1700°F and 2 atmospheres in a turbulent bed of particles using oxygen and steam, to make medium Btu gas for fuel or synthesis. Some of the residual char is withdrawn from the bottom of the gasification reactor, but most of it is blown overhead as a result of the high gas velocity of 5-10ft/sec. Most of the entrained char is collected in cyclones for disposal, and the gas is then cooled and cleaned up to remove residual dust and sulfur.

An overall flowplan of the process is shown in Figure A.8.1 The process can be subdivided into a sequence of steps, each of which will be described in the following sub-sections: (1) Coal Preparation, (2) Gasification, (3) Cooling and Scrubbing, (4) Sulfur Removal, and (5) Auxiliary facilities.

A.8.2 Main Gasification Stream

A.8.2.1 Coal Preparation

This section of the plant includes storage and handling, drying, and crushing. It is assumed that coal cleaning is not required, or that it is carried out elsewhere. Storage requirements will depend upon the specific situation but may provide for example 30 days reserve.

Drying may not always be needed, since it is only necessary to avoid surface moisture which would cause problems in handling and crushing.

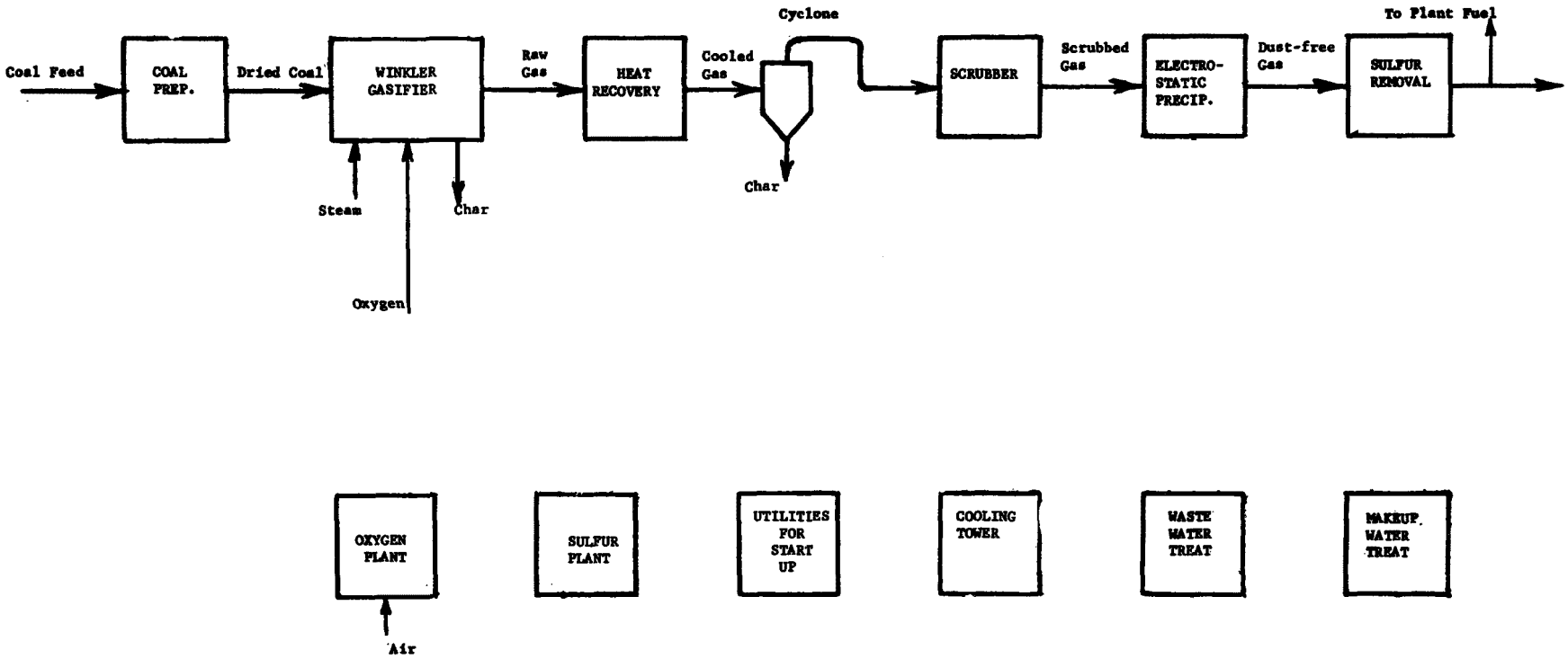

FIGURE A.8.1

WINKLER PROCESS

Rotating tray dryers are used, and for this study a moisture removal of 5% on feed has been taken. Cool gas is recycled to control gas inlet temperature so as not to drive off volatiles. Stack temperature is 350-400°F, resulting in good fuel efficiency. Coal can be used as fuel if flue gas desulfurization is provided, but instead of this we have used part of the clean product gas as fuel to the dryer, with bag filters on the vent gas to control dust emissions. Coal is crushed to 0-8mm, all of which is sent to the gaisifer feed hopper.

A.8.2.2 Gasification

Coal from the feed hopper is fed to the gasifier by means of screw feeders which give the necessary pressure seal. Steam and oxygen are added near the bottom of the reactor, maintaining the particles in a turbulent bed where reaction takes place without reaching temperatures that would fuse the ash. Typically, the bed may be at about 1700°F so that tar and heavy hydrocarbons are destroyed by gasification reactions.

Considerable fines are entrained from the bed, consequently supplemental oxygen and steam are added just above the bed to help consume them. Heat exchange surface in the dilute phase above the bed removes heat for temperature control and generates useful steam. Additional cooling of the raw gas to about 1300°F is accomplished by injecting condensate just before the gas leaves the reactor, in order to prevent fused deposits in the downstream waste heat boiler.

With high reactivity coal, conversion of carbon in the coal feed may be 90%. The remainder is in the char by-product, and represents a significant loss of heating value unless it is used. Part of the rejected char is removed from the bottom of the gasifier, but most of it (ca. 70%) is recovered by a cyclone separator from the exit gases.

Steam fed to the gasifier amounts to about 0.5 pound per pound of coal feed, while steam conversion including moisture in the coal feed is 27%. Oxygen consumed is 0.57 pounds per pound of coal feed.

A.8.2.3 Gas Cooling and Dust Removal

Hot raw gas leaving the reactor at about 1300°F passes through an exchanger to superheat steam, followed by a waste heat boiler and a cyclone to remove entrained char. The gas then goes to a scrubbing tower where it is cooled by direct contact with recirculated water.

Most of the particulates are removed by scrubbing and are separated from the water in a settler. They are included with the char for disposal. Clarified water is cooled by indirect exchange with cooling water before it is recirculated to the scrubber. Net production of this water or gas liquor constitutes sour water containing H_2S, ammonia, cyanides, etc., present in the raw gas. The sour water is processed in waste water treating so that it can be reused.

Since the scrubbed gas will still contain a small amount of dust, it is passed through an electrostatic precipitator for final cleanup. It

can then be compressed, further processed, or used as desired. Traces of contaminants may remain in the gas after scrubbing, such as ammonia, sulfur, oil, etc., especially during upsets or start up. Depending on the intended use, further cleanup may be necessary.

A.8.2.4 Sulfur Removal

The next processing step on the gas is sulfur removal by scrubbing with a suitable solution such as amine, hot carbonate, or a glycol type solvent. These can be regenerated by stripping to give a concentrated H_2S stream that is sent to sulfur recovery. For this study scrubbing with hot carbonate is assumed, since it will remove perhaps half of the carbonyl sulfide present in the gas, and some 10% of the total sulfur will be in this form which is not removed by amines.

A.8.3 Auxiliary Facilities

In order to make a realistic and thorough evaluation of environmental impacts, a complete and self-sufficient plant must be considered, including items such as oxygen plant, sulfur recovery, water treating, and utilities generation. Oxygen is supplied from a conventional air liquefaction plant. The amount is large, equal to 11,536 tons/day. For sulfur recovery, a Claus plant is included with tail gas cleanup using one of the many processes offered for this service. Gas sent to the Claus plant from acid gas treatment contains about 15 vol. % sulfur compounds (mainly H_2S) and 85 vol.% CO_2 on a dry basis. A small amount of clean product gas is used as fuel to incinerate tail gas on the sulfur plant.

A major item is waste water treating on the gas liquor condensed in the scrubber. Flow rate is 11,140 tons/day, and cleanup is required to remove particulates, contaminants such as compounds containing sulfur, nitrogen, or oxygen, as well as arsenic, cadmium, lead, chlorine, fluorine, and other trace elements that are known to be volatile at conditions in the gasifier. This water stream must be thoroughly cleaned up in any case, and then represents a very desirable makeup water for the plant. Facilities include sour water stripping, biological oxidation (biox), and sand filtration prior to using it as cooling tower makeup. Production of phenols is expected to be relatively low at the conditions used in the gasifier (1700°F) so that solvent extraction to remove large amounts of phenols is not included at this time.

Other auxiliary facilities include treatment of makeup water for the cooling water system and for boiler feed water, plus plant utilities such as steam and electric power. It appears from the balances that the plant should be self-sufficient in steam and power during normal operation, although provision must also be made for startup. As far as energy balances and thermal efficiency are concerned, no coal or clean product gas need be consumed to generate plant utilities.

APPENDIX B

Process Descriptions - Liquefaction

APPENDIX B

PROCESS DESCRIPTIONS - LIQUEFACTION

In this appendix, a general description is presented of the liquefaction processes studied. The reader is referred to the individual process reports for details.

B.1 COED Process

B.1.1 General

The COED process being developed by the FMC Corporation is a continuous, staged fluidized-bed coal pyrolysis operating at low pressure, and is designed to recover liquid, gaseous, and solid fuel components from the pyrolysis train. Heat for the pyrolysis is generated by the reaction of oxygen with a portion of the char in the last pyrolysis stage, and is carried counter-currently through the train by the circulation of hot gases and char. Heat is also introduced by the air combustion of the gas used to dry feed coal and to heat fluidizing gas for the first stage. The number of stages in the pyrolysis and the operating temperatures in each may be varied to accommodate feed coals with widely ranging caking or agglomerating tendencies.

Oil that is condensed from the released volatiles is filtered on a rotary precoat pressure filter and catalytically hydrotreated at high pressure to produce a synthetic crude oil. Medium-Btu gas produced after the removal of acid gases is suitable as clean fuel, or may be converted to hydrogen or to high-Btu gas in auxiliary facilities. Residual char (50-60% of feed coal) that is produced has heating value and sulfur content about the same as feed coal, so that its ultimate utilization may largely determine process viability.

Fibure B.1.1 shows a condensation of the main process train and Figure B.1.2 shows each unit in the complex.

B.1.2 Main Gasification Stream

B.1.2.1 Coal Storage and Preparation

B.1.2.1.1 Coal Storage

On-site coal storage will be required to provide back-up for continuous conversion operations. For thirty days storage, there might be eight piles, each about 200 feet wide, 20 feet high, and 1000 feet long. Containment of air-borne dusts is generally the only air pollution control required for transport and storage operations, although odor may be a problem in some instances. Covered or enclosed conveyances with dust removal equipment may be necessary, but precautions must be taken against fire or explosion. Circulating gas streams which may be used to inert or blanket a particular operation or which may issue from drying operations will generally require treatment to limit particulate content before

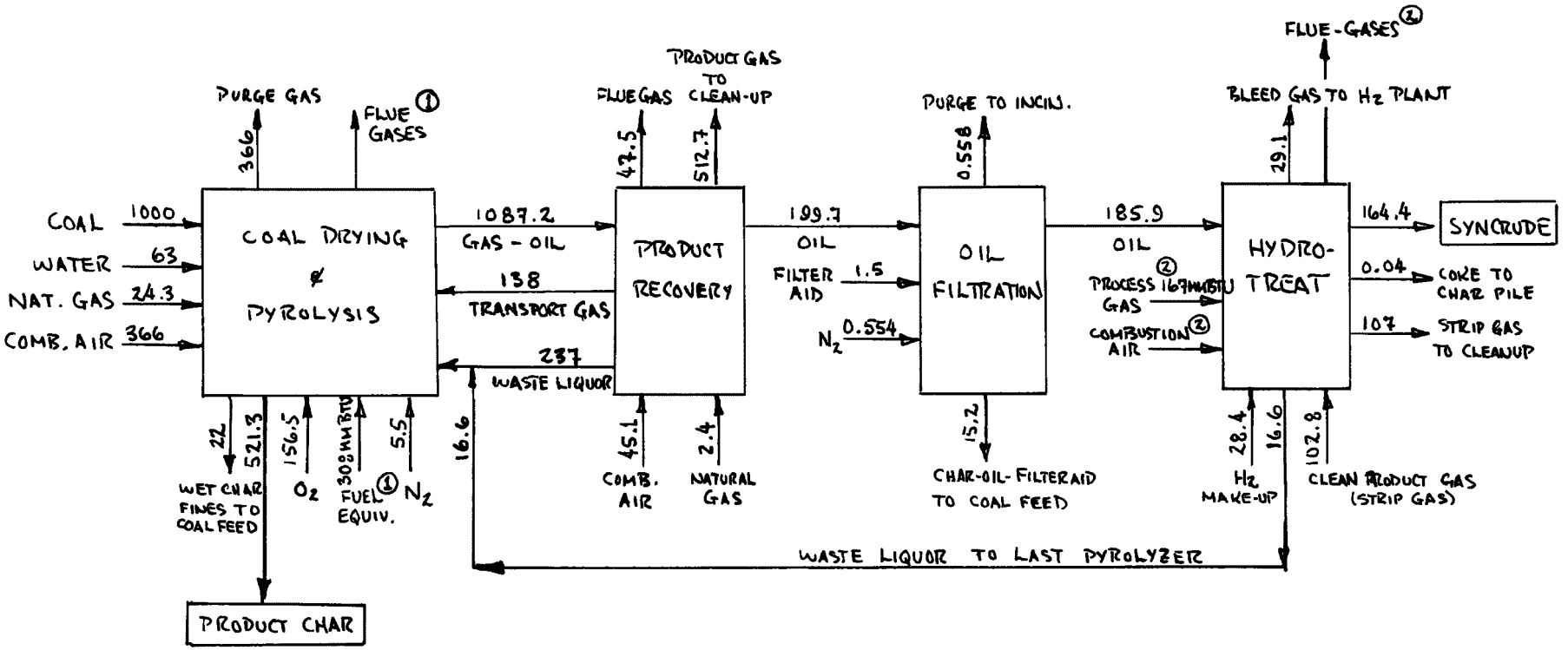

Figure B.1.1

COED Coal Conversion

(All rates in tph)

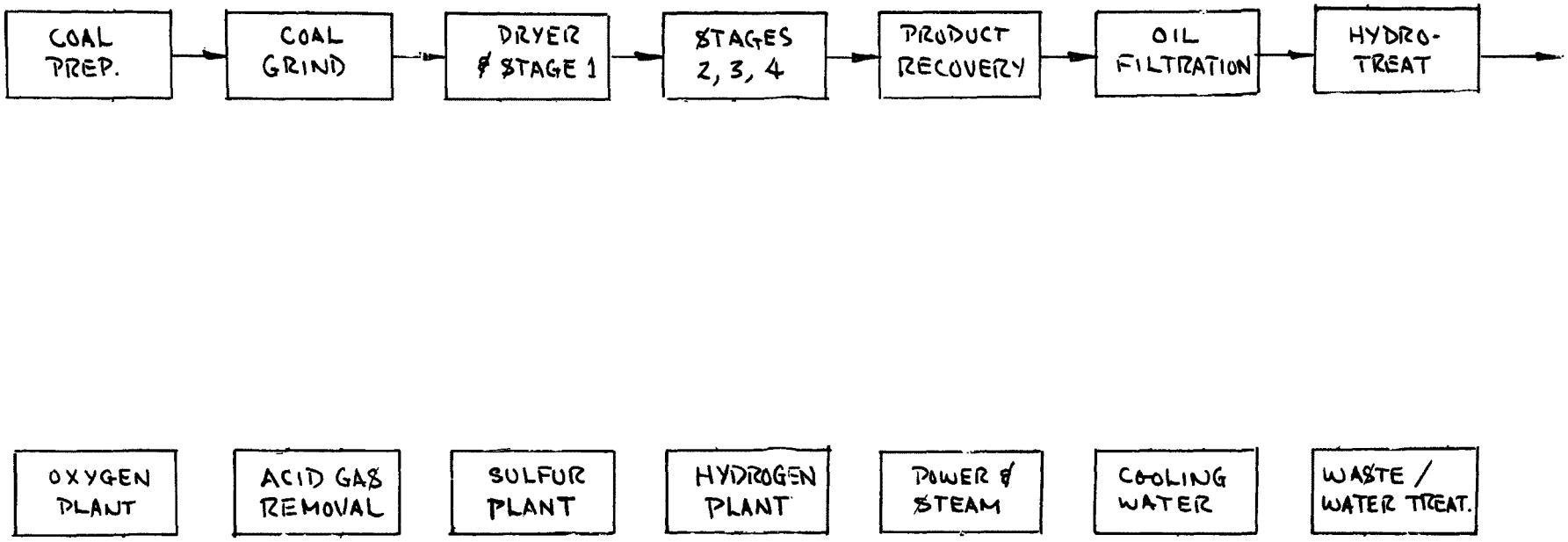

Figure B.1.2

COED Design Revised to Incorporate Environmental Controls and To Include Auxiliary Facilities

discharge to the atmosphere. Careful management and planning will minimize dusting and wind loss and the hazard of combustion in storage facilities.

The as-received feed coal employed in this design is indicated to have 10-14 weight percent moisture content. The FMC process basis feeds coal of about 5.9 weight percent moisture to the coal dryer ahead of the first pyrolyzer. Hence the free or surface moisture is assumed to be removed in the upstream coal preparation plant, although, obviously, the coal dryer proper may be arranged to remove a larger fraction of the original moisture.

Illinois No. 6 coal is currently being supplied with about 17 percent moisture, but this moisture content is a function of the operation of laundering equipment. In a commercial conversion plant situated at the mine, closer control of the delivered moisture would be possible, but with corresponding increase in energy consumption.

The reactivity of coals may be markedly affected by exposure to air, and water serves to seal available pore volume, retarding oxidation. Hence the desired moisture content may be related to the average time-in-storage in a particular facility.

B.1.2.1.2 Coal Grinding

Free moisture will be removed from feed coal by milling in a stream of hot combustion gases, as is practiced in the FMC pilot plant. Coal sized 16 Tyler mesh or smaller, but with minimum fines, is required for the pilot plant, although other studies have indicated that particles up to 1/8 inch or 6-mesh may be suitable. In either case, the mechanical size reduction of an Illinois coal is expected to generate a considerable quantity of -200 mesh fines, especially if appreciable drying accompanies the milling operation. The quantity of such fines has been estimated to be 5 to 8 percent of the feed, depending on the type of equipment that may be used and on the acceptable size range, screening or separation efficiencies, and the recycle rates employed around the mill. Some small fraction of these fines will pass through the system with the sized coal. Additional fines will be produced in the coal dryer proper, and the ultimate consideration is that the total fines fed to the dryer or to the first pyrolyzer shall not overload the cyclone systems provided to effect their separation from the respective effluent streams. There may also be a relationship between the coal size fed to the system and the observable filter rates on raw pyrolysis oil. Fines generated in coal preparation, amounting to 5 percent of feed coal, will not be charged to pyrolysis, but will issue as a fuel product. Coal fines would probably be charged to the char gasification system, if this facility is included.

Clean product gas is fired in the mill heater (the basis indicates that natural gas is used). About 110 tph of water must be removed if coal is received with 14 percent moisture. This may require the firing of 15-20 tph of product gas with 180-200 tph of combustion air in the milling circuit. Assuming a dry particulate separation system is adequate, bag filters might be used to recover fines from the vented gas following primary classification in cyclones.

Depending on water-use constraints, it may be desirable to condense water from the vent gas for reuse. This stream could be combined with, or treated similarly to, gas issuing from the coal drying and first-stage pyrolysis section, wherein the gas is scrubbed in venturi scrubber-coolers. The additional cooling requirement would be about equal to that provided in the design basis for treating vent gas from that section. It is presumed, however, that the additional coal fines separated from scrubber effluent by filtration in this way could not be recycled to the pyrolyzer, and would issue from the system as sludge. This sludge, containing 50 percent water, would preferentially be charged along with char to gasification, if char gasification is included, or might be combusted with char in a char boiler. However, the dry separation system employing bag filters would be preferred in the latter case.

Vent gas which issues from the bag filters from the milling circuit may contain a significant carbon monoxide concentration, depending on the combustion parameters employed in the mill. It may be necessary to direct the stream to a boiler stack or incinerator to complete the combustion. Another possibility is to employ a noble-metal catalytic afterburner, which would minimize the additional fuel requirement, to neutralize the stream.

B.1.2.2 Coal Drying and First Stage Pyrolysis

Clean natural gas is burned sub-stoichiometrically both to dry feed coal and to heat fluidizing gas for the first stage of pyrolysis. Both gas and air feeds to the heaters must be raised in pressure to match the operating pressures of the coal dryer and first stage, nominally 7-8 psig.

Coal is fed from storage hoppers by mechanical feeders into a mixing tee from which it is blown into the dryer with heated transport (recirculated) gas.

A cascade of two internal gas cyclones is provided both the coal dryer and the first pyrolysis reactor. Gas which issues from the first pyrolyzer is circulated through the fluidizing-gas heater for the coal dryer. Gas which issues from the coal dryer passes through an external cyclone and is then scrubbed in venturi scrubber-coolers, which serve to complete the removal of coal and char fines, as well as traces of coal liquids from the gas stream. Fines which are recovered in the external cyclone are passed through a mechanical feeder to a mixing tee where they are injected into the first-stage pyrolyzer by recirculated gas. Water equivalent to that introduced with coal and formed in the combustion processes is condensed from the gas in the scrubbing process.

Scrubber effluent passes into a gas-liquid separator, and the liquor stream is decanted and filtered to remove solids. The solids removed by filtration amount to about one percent of the coal feed, and the wet filter cake is recycled back to coal feed. The decanted liquor, except for a purge stream which, along with the filtrate from the

fines filter, balances the removal of water from the section, is pumped back to the venturi scrubbers through water-cooled heat exchangers.

The gas stream which issues from the separator, except for a purge stream which removes the nitrogen introduced in the combustion processes, is compressed and recirculated to the gas heaters. This purge gas stream is essentially the only gaseous release from this section. Like the gas stream envisioned for the coal preparation section (see above), it is indicated to contain about 3.7 percent carbon monoxide, and will probably require further treatment before it may be released to the atmosphere. It may be possible to inject it into a boiler stack(s) along with air or oxygen to reduce CO emission. Alternatively the stream(s) may have to be incinerated in specific equipment for this purpose with additional fuel. The gas stream in this case represents a loss of combustible equivalent to about 230 MM Btu/hr. It is indicated to be sulfur-free.

B.1.2.3 Stages 2, 3, 4 Pyrolysis

Coal which has undergone first-stage pyrolysis (at temperatures of about 550-600°F) is passed out of the stage into a mixing tee, from which it is transported into the second stage by heated recycle gas. Pyrolysis stages 2,3, and 4 are cascaded such that pyrolyzed solids pass through the stages in sequence in transport gas streams. Superheated steam and oxygen are injected into the last stage, where heat is released by partial combustion. Substantial recycle of hot (~1550°F) char from this last stage is used to supply heat to stages 2 and 3, in which it otherwise serves as an inert diluent. Similarly, hot gas which issues from the last stage is passed counter-currently through the cascade, serving also as the primary fluidizing medium in these reactors. Stages 2 and 3 operate at about 850° and 1050°F respectively.

The pyrolyzer vessels are each about 60-70 feet in diameter. A total of eight pyrolyzers in two trains is required to process the indicated feed coal. All fluidized vessels are equipped with internal dual-cascade cyclone systems.

Gas which issues from the second pyrolyzer passes through an external cyclone before being directed to the product recovery system. Fines which are separated are directed, along with product char from the last stage, to a fluidized bed cooler, which is used to generate 265,000 lb/hr. of 600 psia steam. First-stage recycle gas is used to fluidize the char cooler, and the gas which issues from the cooler is directed back to the venturi scrubbers in the first section after it has passed through an external cyclone. Fines from this cyclone are added to the char make from the last stage. Product char is available at this point at 800°F.

Char will be further cooled by cold-water exchange. In the pilot plant, a two-pass screw conveyor, in which cooling water is supplied to a hollow screw, as well as to the jackets of both flights, is used to cool char to about 100°F. About 180,000 lb/hr of 150 psia steam may be generated in the commercial operation if suitable equipment can be designed.

It has been assumed that clean product gas will be used to superheat the steam and oxygen feeds to the last pyrolysis stage. About 10.5 tons of gas is required, along with about 105 tons of air per hour. The combustion products should be dischargeable without further treatment.

B.1.2.4 Product Recovery System

Gas from the pyrolysis section is cooled and washed in two cascade venturi scrubber stages to condense oil and solid components from the gas stream. The gas which issues from the second scrubber gas-liquid separator is passed through an electrostatic precipitator to remove microscopic droplets and is then cooled to 110°F by cold-water exchange to condense water. About a quarter of the gas stream is compressed and reheated for use as transport gas in the pyrolysis train. The remainder issues from the system as raw product gas, which is to be directed to an acid-gas removal system.

The oil and water condensed from the gas stream in the scrubber-coolers is decanted and separates into three phases: a light oil phase, a middle (aqueous phase), and a heavy oil phase. The oil phases are collected separately for dehydration in steam-jacketed vessels. The combined dehydrated oil is pumped to the COED oil filtration system.

A recycle liquor pump takes suction from the middle phase in the decanter. Recycle liquor is cooled in cold-water exchangers before being injected into the venturi scrubbers. Water condensed from the incoming gas leaves the section as a purge ahead of the recycle liquor coolers, and is indicated to be recirculated to the last pyrolysis stage.

The only major effluents to the atmosphere from this section are the combustion gases from the recycle transport-gas heater. Since clean product gas is fired in this heater, the combustion gases are dischargeable directly.

Vents from the oil decanters and dehydrators are directed to an incinerator. Under normal operation, and with adequate condensing capacity in the vapor take-offs from the dehydrators, vent flow should be minimal.

B.1.2.5 COED Oil Filtration

FMC has designed a filtration plant to handle the COED raw oil output based on filtration rates demonstrated in its pilot plant. The system employs ten 700 $ft.^2$-rotary pressure precoat filters to remove char fines from the raw oil ahead of hydrotreating. Each filter is operated on a 7-hour precoat cycle, followed by a 41-hour filtration cycle.

Both the precoat and the raw oil to filtration are heated, using steam, to about 340°F. Inert gas (nitrogen) is compressed, heated, and recirculated for pressurizing the filters. The gas purge from the system, equivalent to the nitrogen make-up, is directed to an incinerator. It is indicated to contain only trace quantities of combustibles and sulfur.

Hot filter cake (38% oil, 52% char, 10% filter aid at 350°F) is discharged at the rate of about 15 tph, and is added to the plant's char output in the process basis. FMC has recently suggested that filter cake will instead be recycled to coal feed. Filtered oil is directed to the hydrotreating facility.

B.1.2.6 Hydrotreating

Hydrotreating is employed to upgrade the heavy pyrolysis oil through the addition of hydrogen, which serves to convert sulfur to hydrogen sulfide, nitrogen to ammonia, and oxygen to water, as well as to increase the oil's hydrogen content through saturation reactions. In the FMC base design, hydrotreating is performed at a total pressure of 1710-1720 psia. Filtered oil from the filtration plant is pumped, along with hydrogen from a reforming plant and some recycled oil, through a gas-fired preheater into initial catalytic guard reactors. The guard reactors are intended to prevent plugging of the main hydrotreating reactors by providing for deposition of coke formed in the system on low surface-to-volume packing.

The hydrotreating reactors are three-section, down-flow devices. The gas-oil mixture from the guard bed is introduced at the reactor head along with additional recycle hydrogen. Recycled oil and hydrogen at low temperature (100-200°F) are introduced between the catalyst sections in the reactor to absorb some of the exothermic heat of reaction.

The hydrotreated effluent is cooled and flows into a high-pressure flash drum, where oil-water-gas separation is effected. About 60 percent of the gas which separates is recycled by compression to the hydrotreaters. The remainder is directed to the hydrogen plant. A little less than half of the oil which separates is recycled to the hydrotreaters. The remainder, taken as product, is depressured into a receiving tank. From the tank it is pumped into a stripping tower, where clean product gas is used to strip hydrogen sulfide and ammonia.

Clean product gas is used also to strip ammonia and H_2S from the water which separates from hydrotreater effluent. Stripped water is recycled to the last pyrolysis stage. The gas effluents from the stripper are directed to gas clean-up.

The only major effluents to atmosphere from this section are the combustion gases from the hydrotreater preheater. About 4.5 tph of product gas is consumed, along with about 84 tph of combustion air. The products of combustion should be dischargeable directly without further treatment.

The process basis includes a large cooling requirement for hydrotreating effluent, even though preheating is supplied to hydrotreating feed. The developers have indicated that heat integration should be possible in a commercial installation to some degree. The concern involves possible degradation of raw oil feed in a heating system which is not precisely controlled. It has been assumed that 380,000 lb/hr of 600 psia steam will be generated in this cooler.

The process design basis does not provide for catalyst replacement in this section. Nor are facilities included for presulfiding catalyst, if this be required, or for regenerating catalyst. A major unresolved process question relates to the catalyst life that may be expected in commercial operation. Pilot plant results show that activity drops after 300-500 lb oil/lb catalyst, but pilot-plant conditions are considered more rigorous than should be the steady-state condition of the commercial unit.

Since high-temperatures are required generally for the regeneration of the cobalt molybdenum or nickel/tungsten sulfide catalysts used; regeneration, if it is practiced, will occur off-site. Moreover, it is assumed that the hydrotreaters will be designed to run continuously between maintenance shut-downs. It is not clear, however, whether two vessels provided are required to treat the total stream, or whether one represents stand-by capacity. Presumably some standby capacity will be required to permit catalyst changeout in the event of sudden activity loss or development of high pressure drop.

B.1.3 Hydrogen Plant

The COED process gas product is indicated to be the source of hydrogen for the hydrotreating of raw COED oil. Steam reforming, cryogenic separation, and partial oxidation have been investigated as means for recovering the required hydrogen from process gas, but the type of hydrogen plant that may ultimately be used will be a function of the location of the plant (or of the coal type being processed) and of the product sales slate, as well as of the size of the installation. For the present design, it has been assumed that the steam reforming case, as outlined by FMC, will be used.

COED process gas at 15 psia is compressed to 410 psia and passed through a Sulfinol system to remove CO_2 and H_2S. Regenerated acid gases are directed to the sulfur recovery plant. The cleaned process gas containing about 1 ppm H_2S is divided into a fuel gas stream and a process feed gas stream. The process feed gas is passed over a zinc oxide sulfur guard bed to remove sulfur traces, and is then heated by combustion of the fuel gas and hydrogenated with recycle product hydrogen to remove unsaturates. Steam is injected and reforming and shifting occur catalytically according to:

$$CH_4 + H_2O \longrightarrow CO + 2H_2 \quad \text{(reforming)}$$
$$CO + H_2O \longrightarrow CO_2 + H_2 \quad \text{(CO shift)}$$

CO_2 formed in the reactions is removed in a second scrubber-absorber and the process gas is finally methanated catalytically to convert residual CO to methane according to $3H_2 + CO \longrightarrow CH_4 + H_2O$. Resulting product gas is available at 200 psig.

The bleed gas from the hydrotreating plant, containing about 2 percent H_2S and about 0.1 percent ammonia, is returned to the hydrogen plant for reprocessing. It may be preferable to first scrub this stream

with water separately to remove the ammonia trace. About 3.5 tph of H_2S must also be removed from this stream, and the H_2S residual, after water scrubbing, would be removed in an acid gas scrubber and directed to the sulfur recovery plant.

About 9.4 tph of hydrogen is consumed in hydrotreating 185 tph of raw oil (about 3000 ft^3/bbl). It is of course not required that initial acid gas removal be included in the hydrogen plant if acid gas removal is otherwise provided for the total product gas stream. Moreover, gas from the cleaning operation would be available at pressure so that compression is required only from that pressure level. About a third of the hydrogen requirement can be generated from excess CO and hydrocarbons present in the hydrotreating bleed stream. About 25 tph of clean product gas would be required additionally to be fed to the unit, and about 43 tph of water would be consumed in the reformer.

If a hydrogen plant design as described is employed, it should be possible to recover energy from the expansion of the hydrotreating bleed gas through use of turboexpanders or equivalent facilities to offset the energy required for recompression to the level required in the hydrogen plant.

The major gaseous effluents from the hydrogen plant will be the products of combustion from the fired heaters and the CO_2 stream removed from the processed gas after reforming. Since clean product gas is consumed in the heaters, the products of combustion should be dischargeable directly. Some 23 tph of gas is fired. About 60 tph of CO_2 will be removed from the process gas, and this too may be discharged.

B.1.4 Auxiliary Facilities

B.1.4.1 Oxygen Plant

The oxygen plant provides a total of 3760 tons per day of oxygen from 440 MM scfd of air to the last pyrolysis stage. About 340 MM scfd of nitrogen will be separated. Some of this nitrogen may be used to advantage in the plant to inert vessels or conveyances, to serve as transport medium for combustible powders or dusts, as an inert stripping agent in regeneration or distillation, or to dilute other effluent gas streams. Nitrogen is also used to pressurize the rotary pressure raw-oil filters.

B.1.4.2 Acid Gas Removal

The "Benfield" hot potassium carbonate system is assumed in the present study. In the Benfield system, gas absorption takes place in a concentrated aqueous solution of potassium carbonate which is maintained at above the atmospheric boiling point of the solution (225-240°F) in a pressurized absorber. The high solution temperature permits high concentrations of carbonate to exist without incurring precipitation of bicarbonate.

Partial regeneration of the rich carbonate solution is effected by flashing as the solution is depressured into the regenerators. Low-pressure steam is admitted to the regenerator and/or to the reboiler to supply the heat requirement. Regenerated solution is recirculated to the absorbers by solution pumps. Stripped acid gas flows to the sulfur recovery plant after condensation of excess water. Depressurization of the rich solution from the absorber through hydraulic turbines may recover some of the power required to circulate solution.

Raw product gas from the product recovery section must be compressed for effective scrubbing. The actual pressure level that will be employed will be a trade-off between compression costs and the utilities consumptions required otherwise. Based on the concentration of acid gases present in raw gas, a total scrubbing pressure between 100 and 200 psia is indicated, whether an amine or hot carbonate system is employed. It is estimated that the compressor driver will require the equivalent of 500,000 lb/hr. of high-pressure steam to handle the primary raw gas stream. Some 1,400,000 gph of solution must be circulated, requiring the equivalent of 5700 KW. Some 450 MM Btu/hr is required for regeneration, supplied as steam, and about this same cooling duty will be required. Additionally, some 100,000 lb/hr of high-pressure steam, 1200 KW and 95 MM Btu/hr as low-pressure steam and as cooling water will be required to treat the stripping gas stream.

Clean gas may be directed to the various fired heaters throughout the plant, and to the utility boiler (see below). Product gas loss into the regenerator off-gas stream can be held to less than 0.1 percent in proprietary configurations of the process. Moreover, it is possible to selectively remove H_2S, if this is required to produce a suitable feed for a Claus sulfur plant.

B.1.4.3 Sulfur Plant

The type of sulfur plant that will be used has not been specified by FMC. The combined acid-gas streams resulting from treatment of raw product gas (pyrolysis gas) and hydrotreating bleed gas would appear to yield an H_2S concentration of about 7 percent, based on gas analyses presented in the FMC design. Additional concentrated H_2S streams may result from treatment of sour water and stripping gas. FMC has indicated that high-sulfur Illinois coals will yield H_2S levels in the range of 10-20 percent.

For this study, it has been assumed that acid gas will be sufficiently high in H_2S content to permit use of a Claus recovery system. Depending on the acid gas removal process employed, H_2S may be preferentially absorbed to increase its concentration in off-gas fed to the sulfur plant. Claus units are operated commercially with entering H_2S concentrations as low as 6 percent. But these systems generally employ oxygen, so that some of the cost advantage relative to a process like Stretford, which does effectively treat low concentrations, may dissipate.

Tail gas from the Claus unit must be desulfurized, however. Several processes have been developed for this purpose. FMC indicates that the Beavon or Shell Claus Off-Gas Treating (SCOT) process may be employed. It may also be feasible to employ one of the flue-gas desulfurization variants using limestone to scrub tail gas, or processes such as the Wellman-Lord SO_2 Recovery Process or the IFP Secondary Recovery Process may be applied.

Most proprietary tail-gas treatment processes operate to convert SO_2 to H_2S, which may then be selectively removed. The Beavon system catalytically hydrogenates the SO_2 over cobalt-molybdate. The catalyst is also effective for reacting CO, which may be present, with water to form hydrogen, and for the reaction of COS and CS_2 with water to form H_2S.

The hydrogenated stream is cooled to condense water, and the H_2S stream is fed into a Stretford unit to recover sulfur in elemental form. Treated tail gas may contain less than 200 ppm sulfur, with almost all of this being carbonyl sulfide. Condensate may be stripped of H_2S and directed to boiler feed water treatment.

About 500 tpd of elemental sulfur will be separated at the sulfur plant, depending on the sulfur content of the feed coal and on the processing employed. Total sulfur emission to the atmosphere may be held to less than 200 lbs/hr., and the treated tail gas may be directed to a boiler stack for disposal. The small air stream used to regenerate the Stretford solution in the tail gas treatment plant may also be so directed.

B.1.4.4 Utilities

B.1.4.4.1 Power and Steam Generation

The choice of fuel for the generation of the auxiliary electric power and steam required by coal gasification plants markedly affects the overall process thermal efficiency. It is generally least efficient to burn the clean product gas for this purpose. On the other hand, investment in power-plant facilities, including those required to handle the fuel and to treat the flue gas, is generally least when product gas is so used.

COED conversion generates a carbon-containing char equivalent to some 50-60 weight percent of the coal fed to pyrolysis. Since this is considered a fuel product, it would appear that it should be so used in the plant proper. However, it suffers as an acceptable fuel in this case to about the same extent as does the feed coal, in that its sulfur content is observed to be about the same as that of feed coal.

It has been assumed in this study that dirty fuels would not be combusted in the plant, so that clean product gas would be used also for the generation of steam and power requirements. However, the

total utility balances require some additional fuel source. Of the 513 tph of contaminated product gas issuing from the product recovery system, there is net 171 tph of dry gas available from the acid-gas removal system. Some 25 tph is required as feed to the hydrogen plant, so that the net available gas for fuel is 146 tph. The gas is estimated to have a higher heating value of 505 Btu per scf, so that the total available fuel gas equivalent is about 4180 MM Btu per hour.

Net steam requirements for the facility total 783,000 lb/hr, equivalent to a 1130 MM Btu/hr fuel requirement. Net electrical power requirements total 93,200 KW, equivalent to 902 MM Btu/hr of additional fuel. The plant otherwise fires fuel equivalent to 2842 MM Btu/hr in process heaters. Hence the total requirement, 4874 MM Btu per hour, cannot be supplied by the product gas stream alone. The shortfall, equivalent to 694 MM Btu/hr, would presumably come from char.

We have considered that the 2032 MM Btu/hr fuel equivalent required at the power plant could be supplied by the combinative firing of product char and product gas in suitably designed boilers. The fuel requirement is such that if all of the char required to supply the fuel shortfall, about 30 tph, is fired in the power plant along with about 47 tph of product gas, the sulfur emission would be such that flue-gas treatment would still be required. About 2.1 tph of SO_2 would be emitted, equivalent to about 2.0 lb/MM Btu, or above the level permitted by current standards for solid fuels.

Flue-gas treatment might be avoided if char were combusted with product gas throughout the plant. This would require additional investment in char handling and grinding equipment, as well as particulate control on all fired heaters and ash handling and disposal facilities, and may be less attractive than installation of flue-gas treating facilities on the main boiler. A variety of flue gas treatment processes for particulate and SO_x control are under development, and significant progress in this area may be expected by the time a commercial plant is constructed.

The coal fines estimated to be produced in the coal grinding operation could supply the fuel shortfall. This alternative may be attractive in a commercial facility because there would be no additional grinding debit and because the fines production might be entirely consumed. However, such coal fines may command a higher premium as a salable fuel than char, and it may be preferred to charge the coal fines to char gasification, depending on the system used for that purpose.

It has been assumed for the purpose of thermal efficiency calculations that char will be combusted in the plant to make-up the fuel shortfall, and the process for flue-gas treatment has not been debited. It is recognized that char treatment (gasification) is practically required in a commercial design.

B.1.4.4.2 Cooling Water

A total of 200,000 gpm of cooling water is indicated to be required for operating the FMC design. Because most of this requirement is used for thermal exchange against relatively low-pressure streams, the circuit should be relatively free from process contamination leakage.

A design wet bulb temperature of 77°F and an approach to the wet bulb temperature of 8°F was assumed, with a circulating water temperature rise of 30°F. 9,000 gpm is required as cooling tower make-up, equivalent to 4.5 percent of circulation. Some 3,000,000 pounds per hour of water is evaporated at the cooling tower, 600 gpm is lost as drift, and 2400 gpm is withdrawn as blowdown, and is directed to the water treatment facility. The cooling requirement to condense water from the coal grinding effluent gas stream has not been included. If water availability is constrained, this may be attractive.

It is probable that environmental considerations and the costs of water reclamation will operate to restrict industrial water consumption in most domestic locations. Hence a commercial design might maximize use of air-cooled heat exchangers, reserving the use of cold water only for "trim-cooling" or low-level heat transfer applications. The overall economic balance will consider added investments in heat-exchange and electrical hardware associated with air-fin usage, as well as investment in incremental electrical generation capacity. Running costs for the generation of power and for equipment operation would be balanced against the net reduction in water treatment and pumping costs, as well as the net reduction in water loss.

On the basis that half of the requirement may be displaced with forced draft air-cooled heat exchangers, the incremental electrical power requirement is estimated to amount to 26,000 KW. Added cooling water requirement associated with the incremental power generation would bring the net total cooling water requirement to an estimated 100,000 gpm, so that water loss by evaporation might be reduced to about 3025 gpm at the cooling towers. Drift loss would amount to 300 gpm on this basis. Blow-down, or draw-off from the system, might be held to 1200 gpm. There would be a reduction in the power requirement for pumping cooling water. On the other hand, direct discharge of heat to the air environment in certain locations may be less desirable than the humidification associated with cooling towers.

The physical environmental situation at a particular site, including water availability, climatic conditions, and available area, will set limits on the designer's options for heat rejection. Other means, such as cooling ponds, may be practicable. In very special situations, it may prove economic to recover some of the low-level heat, as by circulation in central heating systems to nearby communities or in trade-off situations with irrigation water supplies, where hot water may be used to extend growing seasons. In all situations, the sociological impact of the use of the environment will be an over-riding factor.

B.1.4.4.3 Water Treatment

Analyses of the aqueous condensates produced in the pyrolysis and hydrotreating plants have not been specified. FMC has indicated that these streams would be preferentially recycled to the last, or hottest pyrolyzer, or to char gasification if it be included, after minimal processing to strip ammonia and hydrogen sulfide.

Recycle to a high-temperature char gasification system should present no difficulty. However, the long-term recycle to pyrolysis requires additional study, since temperatures are rather low and there is no basis on which to estimate the degree of "by-pass" through the fluidized bed system. Demonstration of such long-term recycle, however, would considerably reduce investment in treatment facilities. The question may be largely academic, however, because it would appear that a large-scale installation, unless it were arranged to combust char onsite or in an adjacent facility, would include some form of high-temperature char gasification. We have assumed that pyrolysis liquor may be recycled in the present design.

Facilities required to treat water, including raw water, boiler feed water, and aqueous effluents, will include separate collection facilities:

- Effluent or chemical sewer
- Oily water sewer
- Oily storm sewer
- Clean storm sewer
- Cooling tower blowdown
- Boiler blowdown
- Sanitary waste

Retention ponds for run-offs and for flow equalization within the system will be required. Run-off from the paved process area could easily exceed 15,000 gpm during rainstorms. Run-off from the unpaved process and storage areas could exceed 80,000 gpm in a maximum one-hour period.

Pretreatment facilities will include sour water stripping for chemical effluents and Imhoff tanks or septic tanks and drainage fields for sanitary waste. Gravity settling facilities for oily wastes will include API separators, skim ponds, or parallel plate separators. Secondary treatment for oily and chemical wastes will include dissolved air flotation units, granular-media filtration, or chemical flocculation units. Oxygen demand reduction may be accomplished in activated sludge units, trickling filters, natural or aerated lagoons, or by activated carbon treatment.

Boiler feedwater treatment will in general involve use of ion-exchange resins. Reverse osmosis, electrodialysis, and ozonation may find special application.

The COED plant may be able to take advantage of the properties of char and of attractive incremental costs for oxygen to assist its waste water treatment. Hence, the char produced by the process may have some of the attributes of activated carbon, which has been shown to be effective in the removal of a wide variety of the water contaminants expected.

Similarly, oxidation of contaminants in water using oxygen, and especially ozone, is normally reserved for polishing drinking water supplies because of high costs. Direct oxidation, however, is very effective in reducing phenol, cyanide and thiocyanate levels in waste water, and has particular advantage in that solids concentrations are not thereby increased.

B.2 SRC Process

B.2.1 General

The SRC design is based on converting 10,000 tons/day of Illinois type bituminous coal to net liquid products amounting to 25,000 barrels/day of heavy clean liquid fuel, of which 2/3 has a sulfur content of 0.5% while the remaining 1/3 contains about 0.2% sulfur. The plant facilities can be conveniently grouped into several areas including coal preparation and handling, coal liquefaction and filtration, gas cleaning and acid gas removal, product handling and treating, char gasification, hydrogen production, and finally auxiliary facilities such as utilities, oxygen manufacture, water treating, and a sulfur plant. A black flow diagram of the process is shown in Figure B.2.1.

B.2.2 Main Liquefaction Stream

B.2.2.1 Coal Storage and Preparation

Run of mine coal is delivered in rail cars, unloaded, and mechanically stacked in a storage pile with 3 days capacity. Coal containing moisture is reclaimed from storage and conveyed to a breaker. Refuse larger than 3 inches in size from the breaker is returned to the mine for disposal. Coal smaller than 3 inches goes to a second storage pile with 8000 tons capacity, which feeds the washing and cleaning operation. Here it is processed through a series of jigs, screens, centrifuges and cyclones, followed by a roll crusher to reduce it in size to 1-1/4 inch or smaller. Refuse from this cleaning operation goes to a settling pond to clean-up the water for reuse.

The next process step is to dry the washed coal, using a flow dryer to reduce the moisture content to 2.7%. Part of the dried coal supplies the fuel required for drying. However, the sulfur content of this coal is very high and flue gas clean-up would be required to remove sulfur as well as particulates. An alternative is to burn part of the product gas as fuel in the dryer and use bag filters or a water scrubber to control particulates. Fuel consumption can be reduced by using a

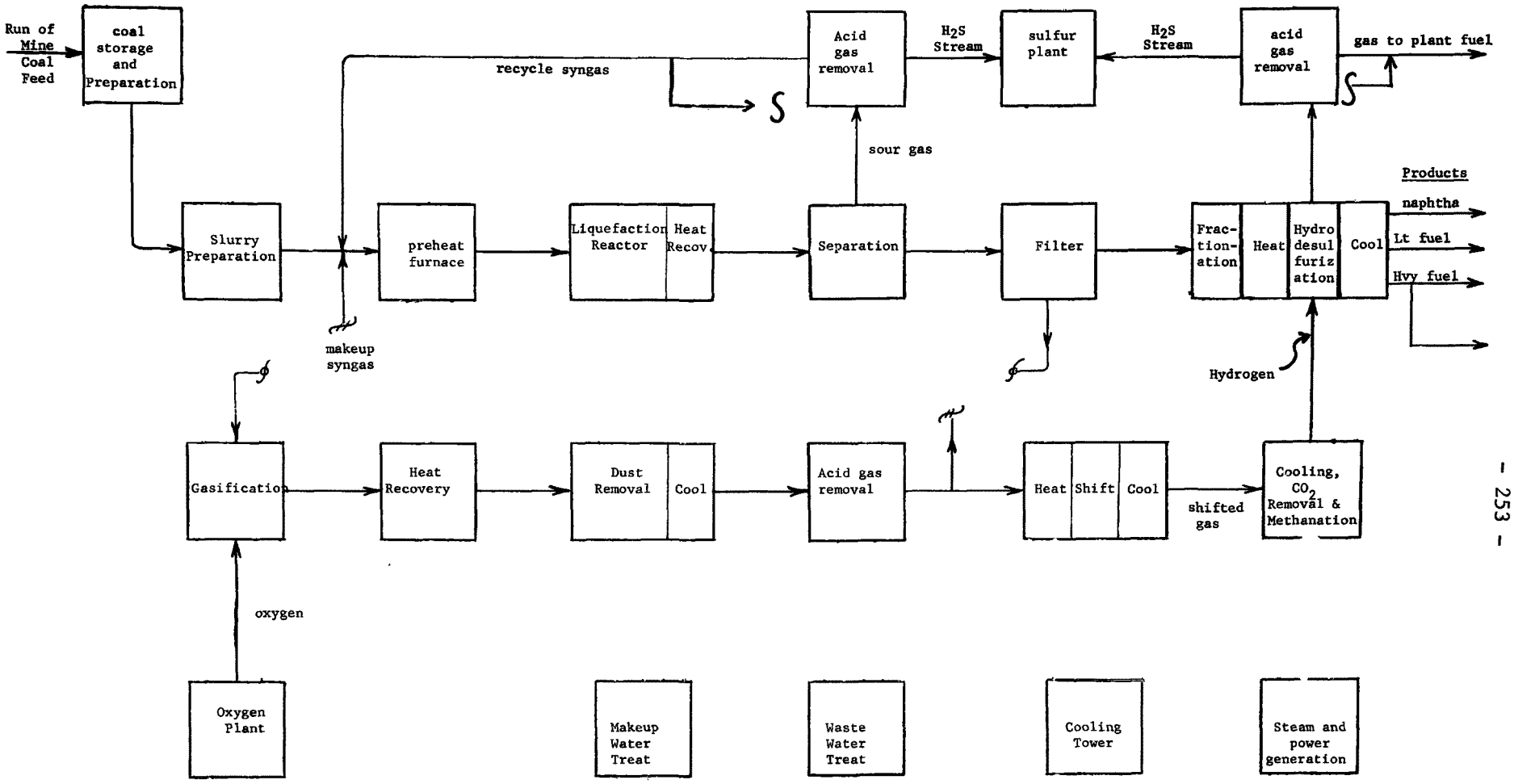

Figure B.2.1

SRC Coal Liquefaction Process

minimum amount of excess air and allowing a higher moisture content in the flue gas. At the same time, the volume of vent gas to clean-up is similarly reduced. The dried coal is then pulverized to 1/8" and smaller and fed to the liquefaction section at a rate of 416 tph.

B.2.2.2 Slurry Formation and Liquefaction

The coal is mixed with 20,000 tpd of recycle oil at 550°F, to form a slurry at 368°F. Upon mixing, moisture in the coal evaporates, is recovered in a condenser, and is returned to the slurry, so that this water does not become an effluent from the plant. The resulting slurry is recycled through a system supplying the high pressure feed pumps which deliver slurry to the reactor section at 1,000 psig pressure. The slurry of coal and recycled oil is mixed with makeup synthesis gas and recycle gas containing steam formed by injecting and vaporizing sour water recovered from the products leaving the reactor. This mixture of gas and slurry goes through a pre-heat furnace, where it is heated to 900°F, and then to a reactor which operates at about 840°F and 1,000 psig, with about one hour holding time. Total gas flow to the reactor corresponds to about 45,000 cu. ft. per ton of coal processed. In this particular design, synthesis-gas is used in the reactor rather than pure hydrogen. Carbon monoxide in this gas is shifted to hydrogen in the reactor and, the water needed for this is added in the feed. Conversion of coal is about 91% on a moisture and ash-free basis.

The stream leaving the liquefaction reactor passes to a separator at 840°F from which gas is removed overhead and recycled to the reactor after passing through acid gas removal. Liquid from the bottom of the separator is cooled and recycled in part to the slurry mixing tank where it is used to suspend the coal feed so that it can be pumped to high pressure. This recycle portion does not have to be filtered. The remaining liquid from the separator after the reactor goes to a rotary pre-coat filter where ash and solid particles are removed. Liquid product from the filter contains about 0.5% sulfur and constitutes the main clean liquid product from the process. About one third of it is further processed by catalytic hydrotreating with pure hydrogen to reduce its sulfur content to 0.2%.

B.2.2.3 Hydrotreating

The primary product stream of filtered reactor liquid is fractionated to give naphtha and a light distillate, both of which are further hydrotreated. Heat for distillation is provided by a furnace which generates a significant amount of flue gas. Since product gas is used as fuel, it should be practical to meet the emissions requirement for large stationary boilers with regard to sulfur, particulates, NO_x, and CO.

The product hydrotreating section also uses furnaces for pre-heating before the reactor and on stripping the product. The comment made on the distillation furnace applies here also. Hydrogen compression is included in this section, and since it involves high pressure, the possibility of leaks requires special consideration as discussed previously.

When the high pressure liquid products are depressured, a considerable amount of dissolved gas is released, which should be recovered or used for fuel. Similarly, when the sour water is depressured, gas will be released which would cause a serious odor problem if vented to the air. Facilities are, therefore, needed to recover this gas and send it to the sulfur plant.

B.2.3 Acid Gas Removal

Separate acid gas removal units are provided on: the gas recycled to the reactor, product fuel gas, after the gasifier, and in hydrogen manufacture. Amine scrubbing is used to remove sulfur from the recycle gas to aid desulfurization, and on the product gas so as to provide clean fuel for use in the plant. Scrubbing removes H_2S which goes to a sulfur plant. It is expected that there will be other forms of sulfur present such as carbonyl sulfide which will not be removed effectively by amine scrubbing. This is particularly true for the gasification system supplying raw gas for hydrogen manufacture since the high CO content of the gas results in a high formation of COS, as much as 10% of the total sulfur content in some similar systems. This will be removed by caustic scrubbing but creates a very large amount of spent caustic that needs disposal. Some work has been reported on hydrolyzing COS etc. to H_2S over catalyst, prior to amine scrubbing, which would improve the situation. Scrubbing the raw gas with hot carbonate may be preferrable, as it should remove COS without consuming caustic. Perhaps a better alternative is to use the low Btu gas from gasification as plant fuel where the clean-up requirements are less stringent, and then make hydrogen from product gas using well demonstrated technology.

B.2.4 Hydrogen Manufacture

In the section making pure hydrogen for hydrotreating, all CO in the feed gas is shifted with steam and the CO_2 scrubbed out using the proprietary Benfield hot carbonate process. This makes a concentrated CO_2 stream which is vented to the atmosphere (809 tpd CO_2), and assurance is needed that it is low enough in sulfur, mist, and chemicals, etc., to be acceptable, and that it is vented in a way to avoid hazards. One concern is that various sulfur and other compounds from gasification may be removed along with CO_2 and contaminate the CO_2 vent stream. Additional facilities may be required to clean up this stream, and we have added a scrubbing system for this purpose to recover sulfur compounds. These compounds are then combined with the feed to the Claus plant for processing.

B.2.5 Gasification and Slag Disposal

In this section, synthesis gas is made by reacting a slurry of the filter cake with steam and oxygen in a slagging gasifier. The filter cake contains residual ash from the coal amounting to 713 tons per day, together with 818 tpd of unreacted char, and is mixed with 1530 tpd of oil to form a pumpable slurry. Oxygen consumption is 1964 tpd while the total steam rate to gasification is 1837 tpd and the steam conversion

65%. The gasifier operates at 1700°F in the top zone, 3000°F in the bottom zone, and 200 psig. It is a modification of a system under development known as BI-GAS. Molten slag is removed at the bottom and quenched to form steam which is returned to the gasifier, while excess water forms a slurry with the fragmented slag so that it can be withdrawn.

Of the oil-filter cake slurry charged to gasification, 30% of it goes to a top zone where the temperature is 1700°F. Consequently, small amounts of tar or oil and soot may be present, in which case additional recovery facilities may be required due to problems with exchanger fouling, emulsion, etc. The design does provide a cyclone to recover dry char from the raw gas and recycle it to the 3000°F zone, since the cake is not completely gasified in one pass. A venturi scrubber is included for final dust removal.

The main effluents to the air from this section are from two furnaces preheating the feed streams to gasification. These furnaces fire clean gas so that there should be no problem in meeting target emissions, as discussed in the section on Product Handling and Hydrotreating. One furnace preheats clean steam to 1050°F for feeding to the top of the gasifier along with 30% of the slurry feed. The other furnace heats recycle char suspended in gas and steam, for feeding to the 2000°F zone along with the other 70% of the slurry feed.

Sour water from scrubbing the raw gas contains sulfur compounds, ammonia, phenols, etc. This stream is treated before discharge to extract phenols, and goes to a sour water stripper which removes light gases that are sent to the sulfur plant. It then flows through oil separators and to a biox pond.

The slag quenching operation is described in general terms, and the 3000°F gasifier zone is segregated from the water slurry, quenching zone. No specific facilities are shown for particle size control, such as grinding, and the system depends on the shattering effect of quenching to form a pumpable slurry.

The design provides a slag storage pile in the coal storage area, prior to back-hauling it to the mine. Since the slag is removed as a slurry, it will have to be drained and stacked. Some of the slag may be very fine, consequently there could be dust problems when it dries out. The extent of odors and sulfur emissions in this operation needs to be determined. Also, water from draining must be recovered and reused, since it will contain considerable suspended solids. It can be recirculated through the storm pond, provided this does not cause secondary pollution problems due to odors or leachable materials.

B.2.6 Auxiliary Facilities

In addition to the main process, various auxiliary facilities are needed, such as the oxygen plant, sulfur plant, utilities, water treating, and product storage, which must be considered from the

standpoint of effluents to the air. The oxygen plant is a large consumer of power and therefore has an important effect on thermal efficiency and energy consumption. One approach uses electric drives on the main air compressor, but where clean fuel is available a flue gas turbine may be more attractive. Or a high pressure bleeder steam turbine can be used, for example generating steam at 600 psig or higher and depressuring it through the turbine to say 125 psig to supply steam for reboilers on acid gas removal, preheating, etc. When a specific plant design is made, it will be important to optimize the utilities system.

The sulfur plant uses a Claus unit, with tail gas clean-up. Concentration of H_2S in the feed is only 7.7 mole percent, resulting in a low sulfur recovery on the Claus unit. Therefore an efficient tail gas clean-up system is needed and there are a number of available processes to choose from. The design is based on using the proprietary Beavon process to reduce residual sulfur compounds to H_2S, which is then removed in a Stretford type scrubbing operation. Other systems could be used for tail gas clean-up such as the IFP, Takahax, Wellman-Lord or Scot processes. Vent gas from the tail gas clean-up operation can be vented to the atmosphere without incineration in some cases.

The Stretford type process uses a scrubbing liquid containing catalyst to oxidize H_2S to free sulfur. The scrubbing liquid is then reoxidized by blowing with air, and precautions must be taken to avoid release of odors or entrained liquid etc. to the atmosphere. This air effluent should pass through an incinerator or furnace unless it is clear that H_2S and other emissions will be acceptable.

Product sulfur may be handled and stored as a liquid in completely enclosed equipment to avoid emissions. If it is handled and stored as a solid, control of dusting will be required.

The largest volume of discharge to the atmosphere from the utility area is on the cooling tower. Air flow through it is about 31,000 MM cfd, and it is therefore critical from the standpoint of pollutants. It might be expected that the recirculated cooling water would be perfectly clean and free of contaminants, however, experience shows that there will be appreciable leakage in exchangers and occasionally tube failures, especially with high pressure operations. In the present design cooling water is exchanged with oil, sour water, raw gas, amines, etc.; therefore, contaminants may get into the circulating cooling water and then be transferred to the air in the cooling tower, which necessarily provides effective contacting and stripping.

Cooling towers also have a potential problem due to drift loss, that is mist or spray which is carried out with the effluent air. Since this contains dissolved solids it can result in deposits when the mist settles and evaporates. In addition there is a potential plume or fog problem, if the atmospheric conditions are such that moisture in the air leaving the cooling tower condenses upon mixing with cooler ambient air. This occurs whenever the mix

temperature is below that corresponding to saturation. Although reheating the effluent air will prevent the plume, it is not normally warranted and consumes energy unless it can be accomplished using waste heat.

The utilities section includes a boiler to provide steam and electric power. It has a large gas effluent, so that emissions of dust, sulfur, NO_x and CO must be controlled. The large fuel consumption of the boiler has a correspondingly large effect on thermal efficiency of the overall plant.

Thermal efficiency of any coal conversion process must take into account the fuel consumed in utilities generation, since this can amount to 15-25% of the main process. In general it is desirable to burn low grade fuel such as char or coal rather than high value product gas or liquid. In the case of the SRC process its purpose is to produce clean boiler fuel so that it is reasonable to use this product to supply utilities fuel, as required. It is important to achieve high efficiency in generating utilities and the combined cycle is, therefore, receiving a lot of attention. In the combined cycle, a gas or liquid fuel is burned at perhaps 10 atmospheres pressure, giving hot gases which are passed through a turbine to generate electric power and then to a boiler generating high pressure steam. Solid fuel, such as coal, can also be used by gasifying the coal and cleaning up the raw gas to provide low Btu gas fuel for the turbine. Such alternatives need to be evaluated carefully in each specific application in order to define the best combination.

Sour water from liquefaction contains compounds with strong odors, such as phenols, H_2S, and ammonia. In the waste water treating section, phenols, etc. are extracted from the sour water by contacting it with a light oil, which is then recycled through catalytic hydrogenation to destroy compounds containing oxygen or nitrogen. The raffinate is then stripped to remove H_2S, ammonia, and traces of oil and solvent which are disposed of to the sulfur plant. Ammonia might be recovered as a by-product. However, most of the nitrogen in the coal remains in the oil product and, therefore, the production of ammonia is small.

Depending upon the efficiency of the extraction and stripping operations, the level of contaminants in the waste water may be reduced to a level low enough to be acceptable without over-loading the biox unit. An oil separator is provided ahead of the biox. Except for this and the biox unit, these facilities are all enclosed in order to avoid any direct effluents to the atmosphere. Sour water from the gasification and product hydrotreating areas is also stripped to remove H_2S and ammonia prior to discharging to the biox unit.

In view of the very strong odor created by phenols and by components in the sour water, careful consideration should be given to this in planning and designing all plant facilities. All oil-water separators should be covered to contain odors, and it is possible that the biox unit will also need to be covered. Further experimental data

should be obtained to define the requirements for this. The SRC oil product contains various oxygenated compounds, including phenols and cresols, as well as relatively large amounts of nitrogen compounds such as pyridine types. These have very strong odors and can create problems in handling and storage.

If the product is solidified by cooling in a prilling tower with direct contact with air, obnoxious fumes can be formed (similar to those generated in asphalt oxidation). These cannot be discharged to the atmosphere and might be incinerated, or gas recirculation could be used with indirect cooling. An alternative is to solidify the product on a metal belt which is cooled by exchange with water. Instead of making a solid product, it could be kept hot above the melting point and handled as a liquid, in which case it will be important to exclude air from the storage and handling facilities. Tests on similar type materials have shown that oxidation reactions induce polymerization, resulting in a large increase in viscosity, and potential gum and asphaltic deposits. Storage tanks are needed with inert gas purge which is vented to the incinerator to control emissions and odors.

This design has a rather large waste water discharge amounting to 30% of the make-up. This includes boiler feed-water blow down, cooling tower blow down, sour water to biox, and the water from sanitary sewers. The total waste water discharge is 1,064 gpm compared to the make-up of 3,626 gpm. It appears that much of the water blow down could be treated and reused without reaching excessive levels of dissolved solids in the cooling tower circuit. Thus, the boiler blow down of 120 gpm can be used as make up to the cooling tower. Evaporation from the cooling tower is about 1800 gpm and it would be expected that the water blow down rate could be appreciably less than the 600 gpm provided, without having too much build-up in dissolved solids. The best disposition of the water effluent from the plant will depend upon its location and the specific situation. It might be used to slurry the ash and solid refuse from coal cleaning for return to the mine, or it may be acceptable to discharge it to a river. Composition of the major components in this discharge water are needed in a specific case in order to determine whether the method of disposal will be satisfactory.

B.3 H-Coal Process

B.3.1 General

In the H-Coal process, coal is reacted catalytically with hydrogen in a slurry system to make synthetic crude. The process can also be used to make low sulfur fuel oil by operating at lower severity. For syncrude operation, reaction conditions are about 850°F and high pressure, such as 2000 psig. Syncrude production is 91,240 barrells/day for the plant feeding 25,000 tons/day of dry coal to the H-Coal reactor. An overall flowplan for the process is shown in Figure B.3.1.

An ebullating bed reactor is used wherein the slurry of coal and catalyst in oil is agitated by bubbling hydrogen gas through it. Size of the catalyst is large relative to the coal, so that, although the catalyst

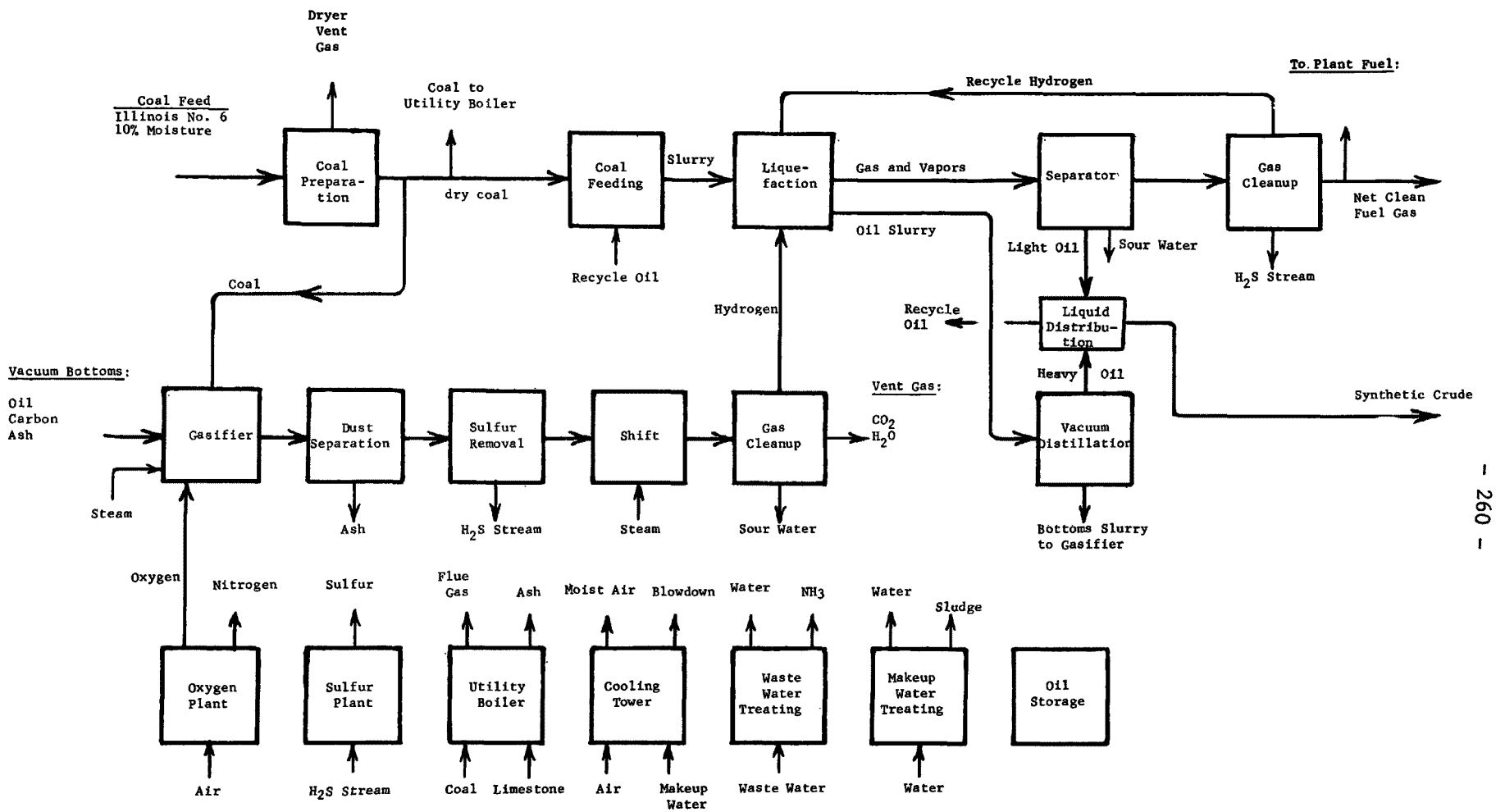

Figure B.3.1

Block Flow Plan of H-Coal Plant for Coal Liquefaction

is fluidized, it is retained in the reactor and is not carried out with the liquid oil sidestream leaving the reactor. In addition, a gas stream is withdrawn separately from the reactor top.

The following subsections describe the various operations in the overall plant. These can be conviently grouped into several areas covering coal preparation and handling, coal liquefaction, gas separation and cleanup, liquid product recovery, hydrogen manufacture, and auxiliary facilities such as utilities, water treating, oxygen plant, and sulfur plant. This grouping will be followed through the report.

B.3.2 Main Liquefaction Stream

B.3.2.1 Coal Preparation and Feeding

This study assumes that cleaned coal is delivered to the plant, consequently the facilities and environmental concerns associated with coal cleaning will be at a different location, and therefore are not covered. Coal cleaning generates considerable amounts of solid refuse to dispose of and wash water to be cleaned up for reuse. A very large coal storage pile is included, having 30 days supply for example.

Coal feed having a nominal 10% moisture is sent first to a dryer where essentially all moisture is removed, and the coal is then crushed through 40 mesh. Crushed coal is mixed with recycle oil to form a slurry that can be pumped into the high pressure hydrogenation system. In addition, part of the dried coal goes to the gasifier so that hydrogen production can be increased to balance consumption, and dried coal also supplies the fuel used on the utility boiler.

B.3.2.2 Liquefaction Section

The coal slurry, together with makeup and recycle hydrogen, goes to a preheat furnace and then to the H-Coal reactor where hydrogenation takes place in the presence of an ebullating bed of coarse catalyst particles. About 96% of the carbon in the coal is converted to liquid or gas products, while the remaining carbon is retained in the ash which is withdrawn as a sidestream from the reactor in the form of a slurry with product oil. Part of this slurry is recirculated to the bottom of the reactor to maintain desired flow conditions.

Gases are withdrawn as a separate stream from the top of the reactor - part of the gas being recycled to the reactor inlet after cleanup to remove sulfur compounds. The remaining gas is withdrawn as a product from the process, and part of it is used to supply clean fuel to the coal dryer, reactor preheat furnace, and tail gas incinerator on the Claus plant. In the gas cleanup operation, water and oil are condensed from the gases leaving the reactor. The resulting sour water is sent to waste water treating while the oil is combined with the main liquid product.

The main oil product is withdrawn from the reactor via a liquid phase settling zone within the reactor so that the large catalyst particles

are separated from the oil product and retained in the reactor. The withdrawn liquid contains ash and unreacted coal particles which are segregated by vacuum distillation into the heaviest bottom fraction of the oil. This vacuum bottoms is used to make hydrogen for the process by gasification with oxygen and steam.

Heat is recovered from the hot effluents leaving the reactor, and used to preheat feed streams or to make steam. Hydrogenation is an exothermic reaction, giving an estimated heat release for this study case of 700 MM Btu/hr, corresponding to 7700 Btu/lb hydrogen consumed, which heat is also recovered and used.

B.3.2.3 Gas Separation and Cleanup

A gas and vapor stream is withdrawn from the top of the liquefaction reactor, above the liquid level. It is substantially free of entrained liquid, and therefore contains little or no solids. Upon cooling, oil and water condense out and are separated. The sour water is sent to waste water treating, while part of the oil is recycled to form a slurry with the coal feed and the remainder of the oil is included in the final syncrude product.

The gas after condensation is cleaned up to remove sulfur compounds which are sent to sulfur recovery. Part of the clean gas is recycled to the H-Oil unit to supply hydrogen, and the rest is available as byproduct fuel gas or for plant fuel. The process used for removing sulfur from the gas is assumed to be scrubbing with an aqueous solution of amine, although hot carbonate could be used instead.

B.3.2.4 Liquid Product Recovery

A liquid stream is drawn off separately from the reactor, consisting of a slurry of ash and unreacted coal in heavy oil. This slurry is distilled under vacuum to produce a clean light distillate oil, part of which is recycled for slurrying the coal feed while the remainder is withdrawn as syncrude product along with some of the light oil condensed from the gases leaving the reactor.

Heavy bottoms from the vacuum tower, containing ash and unreacted coal, is used to make hydrogen in a partial oxidation gasifier.

B.3.3 Hydrogen Manufacture

A partial oxidation system is used for manufacturing hydrogen, consuming as raw material the slurry of vacuum bottoms which may otherwise present a disposal problem. The developer has indicated that a Texaco type partial oxidation process is used, since this type of gasifier is expected to be able to handle such a feedstock whereas some alternative processes may not be able to.

The amount of vacuum bottoms is not sufficient to make all of the hydrogen needed, so some coal feed is also sent to the gasifier, adding to the coal consumption for the plant. Oxygen for gasification is supplied by an onsite oxygen plant, while the required steam is provided from waste

heat boilers. The gasification reactor operates at slagging conditions, over 2000°F, and 500 psig pressure.

Raw gas is quenched and then scrubbed with water to remove particulates including ash and soot. Water condensed at this point contains a wide spectrum of contaminants including ammonia, HCN and other nitrogen compounds, various sulfur compounds, phenols, etc., this sour water is sent to waste water cleanup.

Sulfur compounds are removed from the gas in the next processing step by scrubbing with amine. Some CO_2 is also removed but this is incidental. Amine solution from the absorber is regenerated in a stripping tower with reboiler. The sulfur containing gas stream from amine regeneration is sent to a Claus plant for sulfur recovery. Tail gas cleanup is included, as is common practice, so that the sulfur plant will meet emission requirements.

The clean desulfurized gas is reheated and mixed with supplemental steam for processing in the shift conversion reactor. After shifting, the gas is cooled, and scrubbed to remove CO_2 using one of the available conventional systems such as hot carbonate. The CO_2 stream is vented to the atmosphere as a waste product.

Finally, the product hydrogen is compressed and fed to the hydroliquefaction reactor which operates at about 2000 psig.

B.3.4 Auxiliary Facilities

The discussion so far has described the basic processing units used in a plant for hydroliquefaction of coal. In addition, auxiliary facilities are needed such as an oxygen plant, sulfur plant, and utilities systems to supply steam, electric power, and water. Waste water treating is also required. In addition to contributing effluents and emissions, these auxiliary facilities may also consume additional fuel in the form of coal or clean products from the process.

Oxygen is made by liquefaction of air, giving a waste stream of nitrogen that is clean and can be vented directly to the atmosphere. A sulfur plant is needed to recover by-product sulfur from the various sulfur compounds removed in the gas cleanup operations on the H-Oil unit and in hydrogen manufacture. A Claus type sulfur plant is used, with tail gas cleanup in order to meet environmental requirements. Total sulfur production amounts to 1295 tons/day.

In order to make the plant self-sufficient, utility steam and electric power are generated for use in the process so that purchase of utilities is avoided.

Utility steam is generated at 1000 psig pressure and used to drive the turbogenerator and compressors. In some cases, bleeder turbines are used in order to balance out the generation and consumption of steam at

600 psig and 70 psig. Coal is used as fuel in the utility boiler, on the basis that stack gas cleanup will be provided to control emissions of sulfur and particulates. The amount of coal used in the boiler is 3020 tons/day on a dry basis, giving 299 tons of ash to dispose of.

Water is used for cooling, primarily to condense steam from turbines or on overhead condensers. Cooling water is recirculated at 200,000 gpm through a cooling tower where about three-quarters of the heat is dissipated by evaporation, and the remainder is taken up as sensible heat of the air passing through.

Waste water from the hydroliquefaction section contains a wide range of pollutants including H_2S and other sulfur compounds, nitrogen compounds such as ammonia, HCN, pyridines, etc., phenols and other oxygenated compounds, plus suspended solids, oil, and tar. It would not be acceptable to discharge such water directly from the plant; therefore it is cleaned up and reused. Cleanup of waste water involves the following operations:

- **Settling and filtration to remove solids.**
- **Extraction of phenols using a suitable solvent.**
- **Sour water stripping to remove H_2S, NH_3, and other low boiling materials.**
- **Biological oxidation (biox) to consume residual small amounts of various contaminants, which are converted to cellular sludge.**
- **Activated carbon adsorption, if needed, for final polishing.**
- **Possibly special treatment for trace elements.**

Ammonia will be recovered as a by-product, amounting to 205 tons/day while other contaminants removed from the waste water, such as H_2S and phenols can be sent to the sulfur plant for incineration, or returned to the process where they can be converted and destroyed.

Treated waste water is used as cooling tower makeup, supplemented by boiler blowdown and fresh water. Blowdown from the cooling tower constitutes the net water discharge from the plant amounting to 5100 tons/day (850 gpm). This blowdown, together with drift loss from the cooling tower, serves to purge dissolved solids from the system so as to prevent excessive buildup in the cooling water circuit.

Fresh water makeup is supplied to the cooling tower, as well as to boiler feed water preparation. Combined, these amount to 37,680 tons/day or 6300 gpm, which is the overall water consumption of the plant. Treating of makeup water includes lime softening and clarification, plus demineralization on the portion going to boiler feed water.

APPENDIX C

Process Descriptions - Coal Treating

APPENDIX C

PROCESS DESCRIPTIONS - COAL TREATING

In this appendix on Coal Treating, only the Meyers Process has been investigated in depth. A summary description is included here. For a more detailed description, see the process report.

C.1 Meyers Process

C.1.1 General

In the Meyers process, the pyrites in the coal are removed by reaction with ferric sulfate in a solution containing ferric and ferrous sulfates and sulfuric acid. The ferric ion is continuously regenerated by reaction of oxygen and ferrous ion. The elemental sulfur product is extracted with an organic solvent. The iron product from the pyrites is removed as solid ferric and ferrous sulfates.

A block flow diagram of the basic Meyers process is shown in Figure C.1.

C.1.2 Main Process Streams

C.1.2.1 Coal Storage and Preparation

ROM coal, 8 in. X 0, is received at the plant and stored. Three days storage (7920 tons, wet) has been suggested. This quantity of coal would probably be stored in silos with nitrogen blanketing. It would probably be advisable to store more coal (e.g., 30 days supply) in a "permanent" pile for emergency use. This pile could be covered with asphalt and used only in case of mine outage.

The ROM coal is conveyed to pulverizers where the coal is reduced to 80% less than 200 mesh. The coal from the pulverizers is then fed to the Reaction Section.

It is not necessary to dry the coal as it is subsequently slurried in a water solution. It is assumed that covered conveyers will be used throughout to minimize dust problems. The coal dimunition equipment can be enclosed, with air vented to bag filters. This will reduce outside noise as well as provide for dust containment.

C.1.2.2 Reactor Section

Pulverized coal is mixed with recycled leach solution in a flow through mixing tank. The mixing vessel is maintained at about 210°F. The slurry is continually pumped from the mixing vessel to one of 10 reactor vessels.

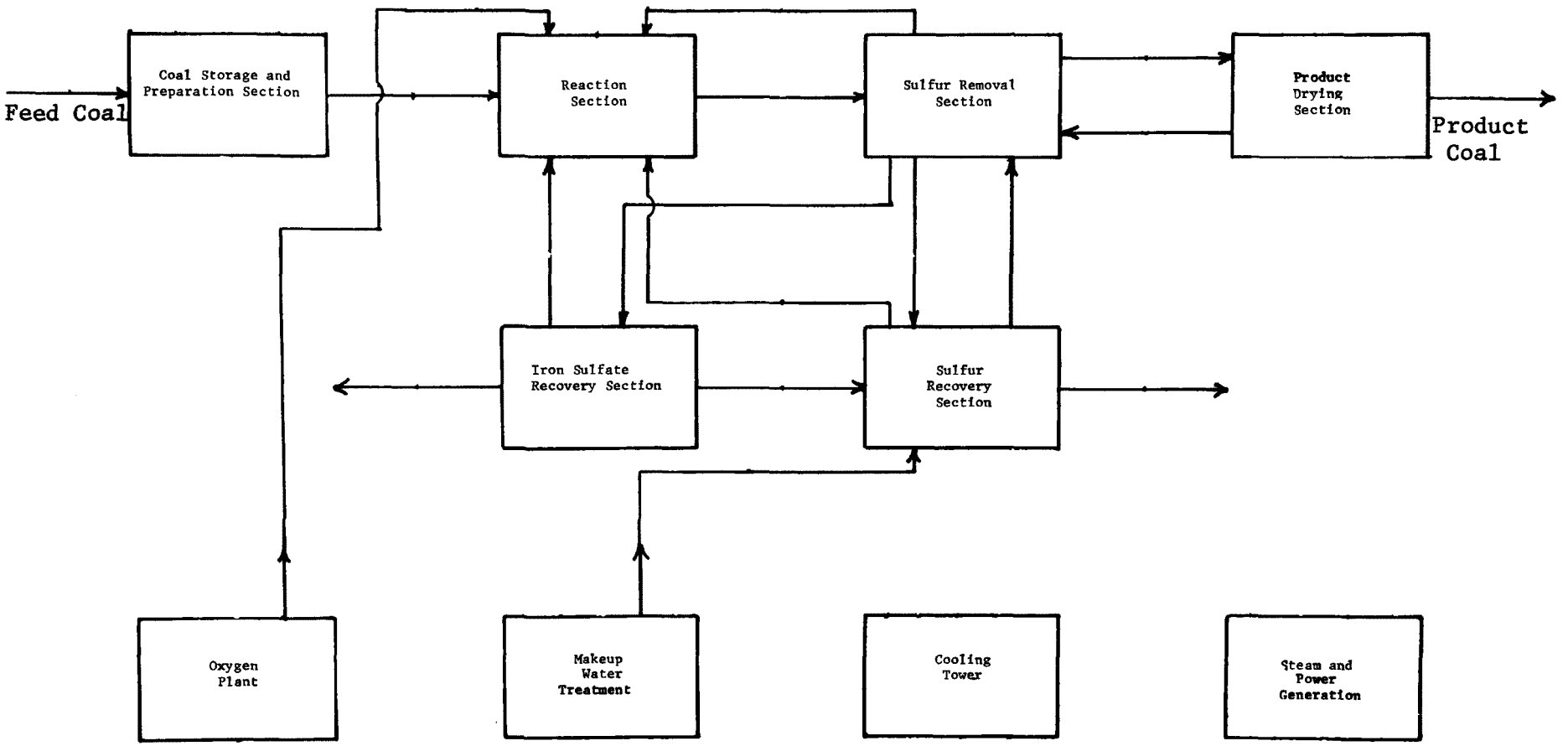

Figure C.1

Flow Diagram of Meyers Process

In the reactor vessels, the slurry is contacted with oxygen at about 300°F. The pyritic sulfur is 95% converted to elemental sulfur and sulfate in the reactor vessels. The reactions taking place in the reactors are shown below:

Leaching Reactions

(1) $FeS_2 + Fe_2(SO_4)_3 \rightarrow 3FeSO_4 + 2S$

(2) $FeS_2 + 7Fe_2(SO_4)_3 + 8H_2O \rightarrow 15FeSO_4 + 8H_2SO_4$

Since the net SO_4:S production from FeS_2 is approximately 1.5:1, the overall leaching reaction is:

(3) $FeS_2 + 4.6Fe_2(SO_4)_3 + 4.8H_2O \rightarrow 10.2FeSO_4 + 4.8H_2SO_4 + 0.8S$

Regeneration Reaction

(4) $9.6FeSO_4 + 4.8H_2SO_4 + 2.4O_2 \rightarrow 4.8Fe_2(SO_4)_3 + 4.8H_2O$

Net Overall Reaction

(5) $FeS_2 + 2.4O_2 \quad 0.2Fe_2(SO_4)_3 + 0.6FeSO_4 + 0.8S$

The excess ferric and ferrous sulfates must be removed from the system. The slurry is cooled by heat exchange with fresh feed and then by cooling water and is pumped to the Sulfur Removal Section.

C.1.2.3 Sulfur Removal Section

In the Sulfur Removal Section, approximately 60% of the leach solution is removed in hydroclones and recycled to the Reaction Section. The remaining leach solution is removed by filtration and is passed to the Iron Sulfate Recovery Section.

The wet filter cake is washed with water and then mixed with recycle solvent (e.g., light naphtha) at 160°F and most of the elemental sulfur is dissolved. The resulting slurry is filtered to remove the cleaned coal which passes to the Product Drying Section. The sulfur-rich solvent is separated from water by decantation and passes to the Sulfur Recovery Section.

C.1.2.4 Product Drying Section

The treated coal, containing about 25% moisture and 5% solvent (dry basis), is conducted to the drying section. The coal is partially dried under vacuum; the sensible heat of the coal is sufficient to remove all the solvent and about 20% of the water. The vapors are returned to the Sulfur Removal Section where they are condensed in a water cooled vessel. The water and solvent are separated by decantation and reused in the process. The coal product, containing 20% moisture (dry basis) then leaves the process.

C.1.2.5 Sulfur Recovery Section

The sulfur-laden solvent and miscellaneous solvent and water streams are passed to the Sulfur Recovery Section. The solvent is removed from the sulfur by distillation and the sulfur leaves the process. Water and rich solvent are separated by decantation. The water is recycled to the Reaction Section and the solvent is returned to the Sulfur Removal Section. Makeup water and solvent are added to the system through the Sulfur Recovery Section.

C.1.2.6 Iron Sulfate Recovery Section

The water filtrate from filtration in the Sulfur Removal Section passes to the Iron Sulfate Recovery Section. Since the process produces iron from the pyrites, it is necessary to remove iron from the system. The filtrate is heated to about 265°F, and some of the water is flashed overhead. Part of the steam thus formed is returned to the Reaction Section and part passes to the Sulfur Recovery Section. The remaining slurry of iron sulfates is filtered at 215°F to produce an iron sulfate filter cake for disposal. The filtrate is returned to the Reaction Section.

C.1.3 Auxiliary Facilities

The auxiliary facilities in the complex include an oxygen plant, raw water treatment, cooling towers and steam and power generating facilities. These auxiliary units must be considered to evaluate effluent problems and overall thermal efficiency.

The oxygen plant is a major consumer of power and there is a large gaseous effluent. It has been assumed in the present design that an extraction turbine, using 600 psig steam, is used to drive the air compressor in the oxygen plant. The extraction steam, at 115 psig, is utilized in the rest of the plant.

A raw water treatment system is provided to furnish makeup water to the steam boiler and cooling tower. Cooling tower blowdown is sent to an evaporation pond. Product coal is burned in the steam plant. The use of product in the boiler furnace affects the thermal efficiency of the overall plant. Control of particulate matter can be effected by the use of commercial electrostatic precipitators, cyclones and/or scrubbers.

APPENDIX D

Trace Elements in Petroleum and Shale

APPENDIX D

TRACE ELEMENTS IN PETROLEUM AND SHALE

D.1 Domestic Crude Oils

Approximately two-thirds of domestic crude oil production is obtained from a relatively small number of large oil fields, sometimes termed "giant" fields.* Generally, U.S. giant fields are defined as those possessing reserves in excess of 100,000,000 bbl. (Some of the older fields which have been in continual production may now possess reserves less than this level. Additionally, certain large new fields may presently be shut in or in a state of development thereby accounting for their relatively low production.) These large oil fields are responsible for a majority of U.S. oil production and they are also representative of the nation's total oil production. This occurs because many smaller oil fields in close proximity to the giant fields possess very similar characteristics including similar trace element concentrations. In practice, the production of these smaller fields is generally combined with that from the large fields in the pipe line networks that grid oil producing regions. Thus, the oil arriving at refineries is a mixture, dominated by production of the giant fields. Consequently, for practical purposes, the characteristics of the larger fields characterize the great bulk of all domestic petroleum production.

D.1.1 Sulfur and Nitrogen Data

Because of the prominence of the giant fields, their crudes have been subject to much of the trace element data that are available. Sulfur and nitrogen data for crude oils from these fields are the most complete and consequently will be considered separately. Of a total of 259 giant U.S. oil fields, sulfur data were obtained for 251 fields (96.9%) and nitrogen data were acquired for 229 fields (88.4%). On a production basis, sulfur data covered 94.6% of giant field's production, and the nitrogen data 88.5%. Most of the sulfur and nitrogen data were obtained from Bureau of Mines sources through either publications or open files of crude oil analyses.

In assembling this compilation, data from published, widely available sources were utilized in preference to data from less available sources. Consequently, published Bureau of Mines data took precedence over Bureau of Mines open file analysis data. An average was obtained when duplicate BuMines data were available for a given field. Data officially published by the Bureau were used in preference to those appearing elseswhere, even if the authors of these other works were Bureau personnel. The giant field sulfur and nitrogen data follow in Table D.1.

---

* "Giant field" is a relative term. Of the current producers, the two largest are the Wilmington (California) and East Texas fields. Each produces approximately 70-75 thousands barrels per day. This may be contrasted with the Ghawar field in Saudi Arabia, the world's largest, which has a production level more than ten fold greater than Wilmington. Reserves of the Ghawar field are estimated to approach 70 billion barrels.

The data presented in Table D.1 were evaluated on both a production and a geometric average basis. These evaluations are discussed below by element.

Sulfur - The sulfur data were plotted as a histogram. The resulting frequency distribution is shown as Figure D.1. In this figure, each sulfur percentage increment covers a range centering on the value shown. For example, the sulfur value of 0.3 covers a range of 0.25 to 0.3499% sulfur. The sulfur data are log normally distributed about the 0.2% level, although the distribution possesses a long tail. A distribution of this type is the classic one found for the distribution of many trace elements in the earth's crust.

The geometric mean of the sulfur data as calculated from Table D.1 was 0.42%. A production average calculated from this same data was 0.77% S, indicating that certain large production fields possessed a greater than average sulfur content. Crudes possessing a sulfur level of <0.1 were treated as if this level were 0.1 for calculation purposes.

The sulfur data ranged from less than 0.1% for a number of fields in southern Texas near the Gulf Coast (Texas Railroad Commission Corpus Christi District 4) to 5.07% and 4.99% for the Cat Canyon West and Santa Maria Valley fields of the coastal area of California.

Nitrogen - A histogram of the nitrogen data is shown in Figure D.2. As with the sulfur graph, each nitrogen percentage increment is centered on the value shown so that the value of 0.25 covers a range of 0.24 to 0.2599% N. Once again the data appear to be log normally distributed with a long tail. The modal value occurs at 0.03% N.

The geometric mean of the nitrogen data of Table D.1 was 0.028%. This is in contrast to a production average of 0.159%. As with sulfur content, substantial production from high nitrogen content fields has made the production average greater than the geometric mean.

The lowest nitrogen level, 0.002%, was observed for crude from the recently discovered Jay field in Florida. The highest, 0.913%, was found for crude from the San Ardo field in the coastal region of California. It is well known that many California crudes possess very high nitrogen as well as sulfur levels. Consequently, it was not unexpected that all crudes possessing nitrogen levels above 0.5% were from California.

D.1.2 Other Trace Element Data

With the exception of sulfur and nitrogen, the Bureau of Mines has not performed trace element analysis as part of their routine analyses of crude oils. This factor, coupled with the lack of widespread published data in this area from other sources, means that a large gap exists in reliable information on trace elements. Consequently, no complete trace element distribution is possible even for the giant fields.

Table D.1

Sulfur and Nitrogen Content
of The Giant U.S. Oil Fields

State/Region and Field	Sulfur, Weight Percent	Nitrogen, Weight Percent	1971 Production (Thousands of Barrels)*
ALABAMA			
Citronelle	0.38	0.02	6,390
ALASKA			
Granite Point	0.02	0.039	5,552
McArthur River	0.16	0.160	40,683
Middle Ground Shoal	0.05	0.119	11,277
Prudhoe Bay (North Slope)	1.07	0.23	1,076
Swanson River	0.16	0.203	11,709
APPALACHIAN			
Allegany	0.12	0.028	388
Bradford	0.11	0.010	2,470
ARKANSAS			
Magnolia	0.90	0.02	850
Schuler and East	1.55	0.112	800
Smackover	2.10	0.08	2,800
CALIFORNIA			
SAN JOAQUIN VALLEY			
Belridge South	0.23	0.773	9,211
Buena Vista	0.59	--	5,429
Coalinga	0.43	0.303	7,866
Coalinga Nose	0.25	0.194	4,752
Coles Levee North	0.39	0.309	1,006
Cuyama South	0.42	0.337	2,034
Cymric	1.16	0.63	3,345
Edison	0.20	0.446	1,417
Elk Hills	0.68	0.472	951
Fruitvale	0.93	0.527	1,109
Greeley	0.31	0.266	761
Kern Front	0.85	0.676	3,440
Kern River	1.19	0.604	25,542
Kettleman North Dome	0.40	0.212	840
Lost Hills	0.33	0.094	2,328
McKittrick - Main Area	0.96	0.67	5,348
Midway Sunset	0.94	0.42	33,583
Mount Poso	0.68	0.475	1,378
Rio Bravo	0.35	0.158	425
COASTAL AREA			
Carpenteria Offshore	--	--	5,295
Cat Canyon West	5.07	0.54	2,705
Dos Cuadras	--	--	27,739
Elwood	--	--	108

* Oil and Gas Journal, January 31, 1972 pp. 95-100.

Table D.1 (Cont'd)

State/Region and Field	Sulfur, Weight Percent	Nitrogen, Weight Percent	1971 Production (Thousands of Barrels)*
Orcutt	2.48	0.525	2,173
Rincon	0.40	0.48	4,580
San Ardo	2.25	0.913	9,939
Santa Ynez***	--	--	--
Santa Maria Valley	4.99	0.56	1,966
South Mountain	2.79	--	1,962
Ventura	0.94	0.413	10,188
LOS ANGELES BASIN			
Beverly Hills	2.45	0.612	8,400
Brea Olinda	0.75	0.525	4,228
Coyote East	0.95	0.336	864
Coyote West	0.82	0.347	2,436
Dominguez	0.40	0.360	1,717
Huntington Beach	1.57	0.648	16,249
Inglewood	2.50	0.640	3,992
Long Beach	1.29	0.55	3,183
Montebello	0.68	0.316	740
Richfield	1.86	0.575	1,910
Santa Fe Springs	0.33	0.271	953
Seal Beach	0.55	0.394	1,468
Torrance	1.84	0.555	1,338
Wilmington	1.44	0.65	72,859
COLORADO			
Rangely	0.56	0.073	10,040
FLORIDA			
Jay	0.32	0.002	370
ILLINOIS			
Clay City	0.19	0.082	4,650
Dale	0.15	0.080	690
Loudon	0.27	0.097	4,420
New Harmony	0.23	0.158	2,740
Salem	0.17	0.102	3,360
KANSAS			
Bemis-Shutts	0.57	0.162	2,590
Chase-Silica	0.44	0.13	1,600
Eldorado	0.18	0.085	1,500
Hall-Gurney	0.34	0.108	2,480
Kraft-Prusa	0.27	0.171	3,200
Trapp	0.41	0.076	1,930
LOUISIANA			
NORTH			
Black Lake	--	--	--
Caddo-Pine Island	0.37	0.026	3,500
Delhi	0.82	0.053	5,870
Haynesville (Ark.-La.)	0.66	0.022	2,730
Homer	0.83	0.081	330
Lake St. John	0.17	--	1,170
Rodessa (La.-Tex.)	0.46	0.032	900

- - - - -

* Oil and Gas Journal, January 31, 1972, pp. 95-100.

*** Undeveloped field, Santa Barbara Channel. Uncorroborated estimate of reserves of 1 to 3 billion bbl.

Table D.1 (Cont'd)

State/Region and Field	Sulfur, Weight Percent	Nitrogen, Weight Percent	1971 Production (Thousands of Barrels)*
OFFSHORE			
Bay Marchand Block 2 (Incl. onshore)	0.46	0.11	30,806
Eugene Island Block 126	0.15	0.030	5,621
Grand Isle Block 16	0.18	0.04	21,681
Grand Isle Block 43	--	--	22,776
Grand Isle Block 47	0.23	0.04	4,271
Main Pass Block 35	0.19	0.071	3,504
Main Pass Block 41	0.16	0.025	18,469
Main Pass Block 69	0.25	0.098	12,775
Ship Shoal Block 208	0.38	0.02	10,038
South Pass Block 24 (Incl. onshore)	0.26	0.068	20,330
South Pass Block 27	0.18	0.049	21,425
Timbalier S. Block 135	0.66	0.088	13,578
Timbalier Bay (Incl. onshore)	-- 0.33	-- 0.081	30,988
West Delta Block 30	0.33	0.09	26,390
West Delta Block 73	--	--	15,987
SOUTH, ONSHORE			
Avery Island	0.12	--	3,400
Bay De Chene	0.27	0.060	6,643
Bay St. Elaine	0.39	0.04	7,775
Bayou Sale	0.16	--	5,293
Black Bay West	0.19	0.04	9,892
Caillou Island (Incl. offshore)	0.23	0.04	31,828
Cote Blanche Bay West	0.16	0.033	15,658
Cote Blanche Island	0.10	0.01	8,797
Delta Farms	0.26	0.055	1,278
Garden Island Bay	0.22	0.06	16,096
Golden Meadow	0.18	--	2,738
Grand Bay	0.31	--	6,680
Hackberry East	0.30	0.054	2,226
Hackberry West	0.29	--	3,760
Iowa	0.20	0.039	876
Jennings	0.26	--	292
Lafitte	0.30	--	10,877
Lake Barre	0.14	0.02	7,592
Lake Pelto	0.21	0.035	4,891
Lake Salvador	0.14	0.02	4,380
Lake Washington (Incl. offshore)	0.37	0.146	10,913
Leeville	0.20	0.019	4,343
Paradis	0.23	--	1,898
Quarantine Bay	0.27	0.061	7,117
Romere Pass	0.30	--	3,759
Venice	0.24	--	5,475
Vinton	0.34	0.044	2,299
Weeks Island	0.19	--	10,183
West Bay	0.27	0.071	9,563

- - - - -

* Oil and Gas Journal, January 31, 1972, pp. 95-100.

Table D.1 (Cont'd)

State/Region and Field	Sulfur, Weight Percent	Nitrogen, Weight Percent	1971 Product (Thousands of Barrels)*
MISSISSIPPI			
Baxterville	2.71	0.111	9,300
Heidelberg	3.75	0.112	3,450
Tinsley	1.02	0.08	2,450
MONTANA			
Bell Creek	0.24	0.13	5,950
Cut Bank	0.80	0.055	5,180
NEW MEXICO			
Caprock and East	0.17	0.034	905
Denton	0.17	0.014	2,350
Empire Abo	0.27	0.014	9,520
Eunice	1.14	0.071	1,330
Hobbs	1.41	0.08	5,700
Maljamar	0.55	0.062	6,040
Monument	1.14	0.071	3,720
Vacuum	0.95	0.075	17,030
NORTH DAKOTA			
Beaver Lodge	0.24	0.019	3,140
Tioga	0.31	0.016	1,790
OKLAHOMA			
Allen	0.70	0.21	2,920
Avant	0.18	--	365
Bowlegs	0.24	0.140	2,260
Burbank	0.24	0.051	5,240
Cement	0.47	0.152	2,370
Cushing	0.22	0.08	4,300
Earlsboro	0.47	--	765
Edmond West	0.21	0.045	730
Eola-Robberson	0.35	0.115	4,850
Fitts	0.27	--	1,420
Glenn Pool	0.31	0.096	2,480
Golden Trend	0.15	0.15	12,330
Healdton	0.92	0.15	4,600
Hewitt	0.65	0.148	5,660
Little River	0.28	0.065	440
Oklahoma City	0.16	0.079	1,750
Seminole, Greater	0.30	0.016	1,640
Sho-Vel-Tum	1.18	0.27	36,500
Sooner Trend	--	--	15,240
St. Louis	0.11	0.04	1,350
Tonkawa	0.16	0.033	290

- - - - -

* Oil and Gas Journal, January 31, 1972, pp. 95-100.

Table D.1 (Cont'd)

State/Region and Field	Sulfur, Weight Percent	Nitrogen, Weight Percent	1971 Production (Thousands of Barrels)*
TEXAS			
DISTRICT 1			
Big Wells	--	--	5,840
Darst Creek	0.78	0.075	1,971
Luling-Branyon	0.86	0.110	1,679
DISTRICT 2			
Greta	0.17	0.038	3,577
Refugio	0.11	0.027	657
Tom O'Connor	0.17	0.038	23,360
West Ranch	0.14	0.029	17,009
DISTRICT 3			
Anahuac	0.23	0.041	9,052
Barbers Hill	0.27	0.06	766
Conroe	0.15	0.022	12,994
Dickison-Gillock	0.82	0.014	2,920
Goose Creek and East	0.13	0.028	1,095
Hastings E&W	0.20	0.03	17,191
High Island	0.26	0.048	2,081
Hull-Merchant	0.35	0.081	1,643
Humble	0.46	0.097	1,241
Liberty South	0.14	0.044	949
Magnet Withers	0.19	0.033	3,869
Old Ocean	0.14	0.029	1,132
Raccoon Bend	0.19	0.048	2,409
Sour Lake	0.14	0.016	1,058
Spindletop	0.15	0.03	328
Thompson	0.25	0.029	12,885
Webster	0.21	0.046	16,206
West Columbia	0.21	0.055	1,351
DISTRICT 4			
Agua Duke-Stratton	<.1	0.015	2,518
Alazan North	0.04	0.014	3,723
Borregas	<.1	0.029	4,818
Government Wells N.	0.22	0.043	511
Kelsey	0.13	0.008	6,059
La Gloria and South	<.1	0.008	936
Plymouth	0.15	0.049	986
Seeligson	<.1	0.015	6,424
Tijerina-Canales-Blucher	<.1	0.010	5,986
White Point East	0.13	0.02	1,606
DISTRICT 5			
Mexia	0.20	0.048	109
Powell	0.31	0.054	109
Van and Van Shallow	0.8	0.039	12,337

- - - - -

* Oil and Gas Journal, January 31, 1972, pp. 95-100.

Table D.1 (Cont'd)

State/Region and Field	Sulfur, Weight Percent	Nitrogen, Weight Percent	1971 Production (Thousands of Barrels)*
DISTRICT 6			
East Texas	0.32	0.066	71,139
Fairway	0.24	--	14,271
Hawkins	2.19	0.076	29,054
Neches	0.13	0.083	3,942
New Hope	0.46	0.007	292
Quitman	0.92	0.036	3,103
Talco	2.98	--	4,380
DISTRICT 7-C			
Big Lake	0.26	0.071	474
Jameson	<.1	0.034	1,387
McCamey	2.26	0.139	985
Pegasus	0.73	0.200	4,052
DISTRICT 8			
Andector	0.22	0.033	5,694
Block 31	0.11	0.032	6,242
Cowden North	1.89	0.095	9,782
Cowden South, Foster, Johnson	1.77	0.127	14,198
Dollarhide	0.39	0.074	7,592
Dora Roberts	<.1	0.023	3,066
Dune	3.11	0.111	11,425
Emma and Triple N	<.1	0.025	3,030
Fuhrman-Mascho	2.06	0.085	1,935
Fullerton	0.37	0.041	6,607
Goldsmith	1.12	0.079	20,951
Headlee and North	<.1	0.083	1,460
Hendrick	1.73	0.094	766
Howard Glasscock	1.92	0.096	6,606
Iatan East	1.47	0.120	3,687
Jordan	1.48	0.10	3,212
Kermit	0.94	0.092	2,007
Keystone	0.57	0.042	8,322
McElroy	2.37	0.080	9,015
Means	1.75	0.205	7,921
Midland Farms	0.13	0.080	6,059
Penwell	1.75	0.205	2,044
Sand Hills	2.06	0.085	6,606
Shafter Lake	0.25	0.041	2,956
TXL	0.36	0.067	4,854
Waddell	1.69	0.098	4,453
Ward South	1.12	0.08	803
Ward Estes North	1.17	0.107	10,184
Yates	1.54	0.150	13,359

- - - - -

* Oil and Gas Journal, January 31, 1972, pp. 95-100.

Table D.1 (Cont'd)

State/Region and Field	Sulfur, Weight Percent	Nitrogen, Weight Percent	1971 Production (Thousands of Barrels)*
DISTRICT 8-A			
Cogdell Area	0.38	0.063	14,235
Diamond M	0.20	0.131	7,373
Kelly-Snyder	0.29	0.066	52,487
Levelland	2.12	0.136	9,746
Prentice	2.64	0.117	5,913
Robertson	1.37	0.100	2,774
Russell	0.77	0.078	4,234
Salt Creek	0.57	0.094	9,271
Seminole	1.98	0.106	9,125
Slaughter	2.09	--	35,515
Spraberry Trend	0.18	0.173	18,688
Wasson	1.14	0.065	51,210
DISTRICT 9			
KMA	0.31	0.068	2,920
Walnut Bend	0.17	0.05	3,942
DISTRICT 10			
Panhandle	0.55	0.067	14,235
UTAH			
Greater Aneth	0.20	0.059	7,660
Greater Redwash	0.11	0.255	5,800
WYOMING			
Elk Basin (Mont.-Wyo.)	1.78	0.185	14,380
Garland	2.99	0.290	3,500
Grass Creek	2.63	0.311	3,760
Hamilton Dome	3.04	0.343	4,500
Hilight	--	--	11,300
Lance Creek	0.10	0.055	325
Lost Soldier	1.21	0.076	4,820
Oregon Basin	3.44	0.356	12,260
Salt Creek	0.23	0.109	11,750

- - - - -

* Oil and Gas Journal, January 31, 1972, pp. 95-100.

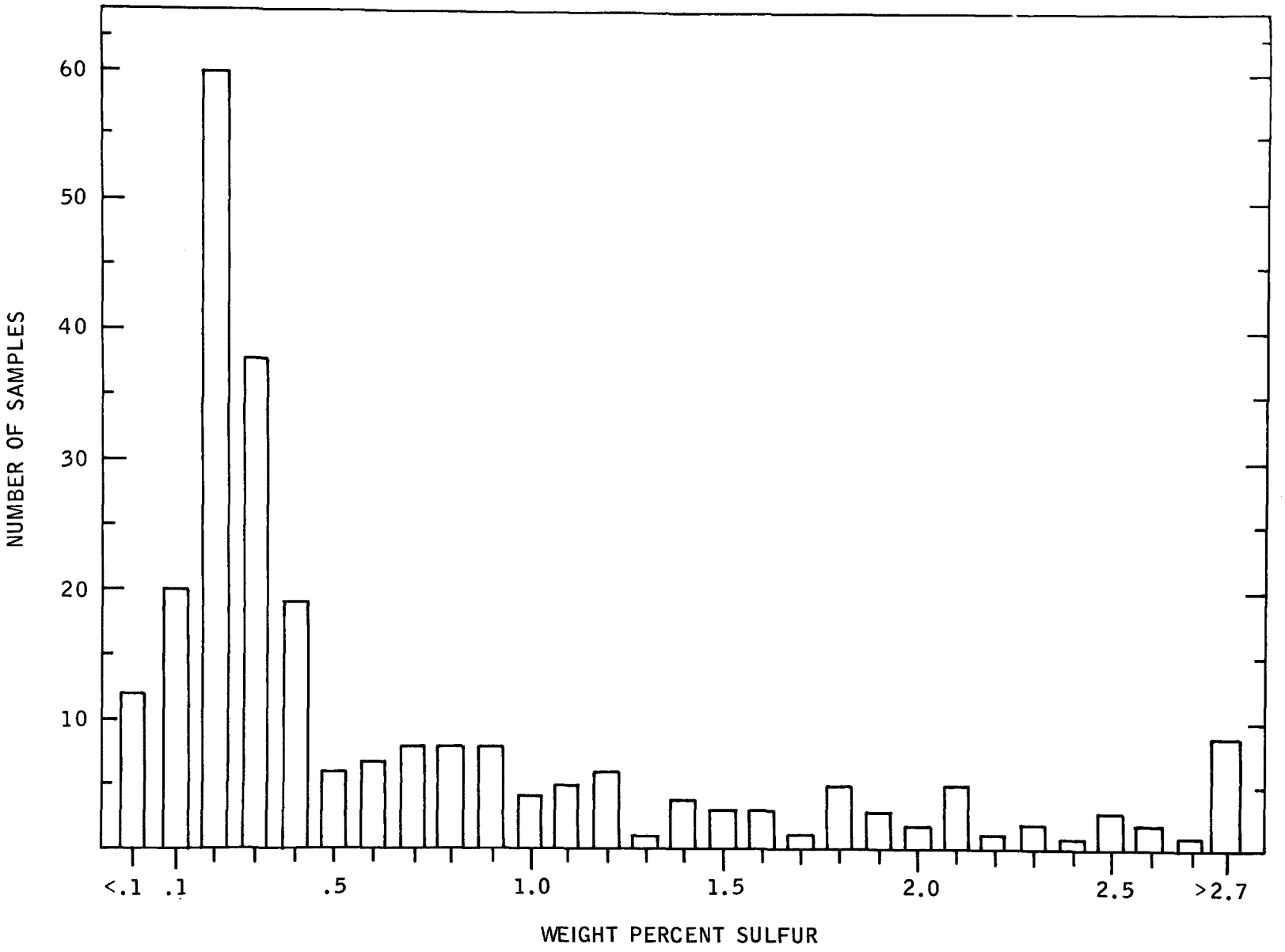

Figure D.1

Fequency Distribution of Sulfur Content in Crude Oils of U.S. Giant Oil Fields

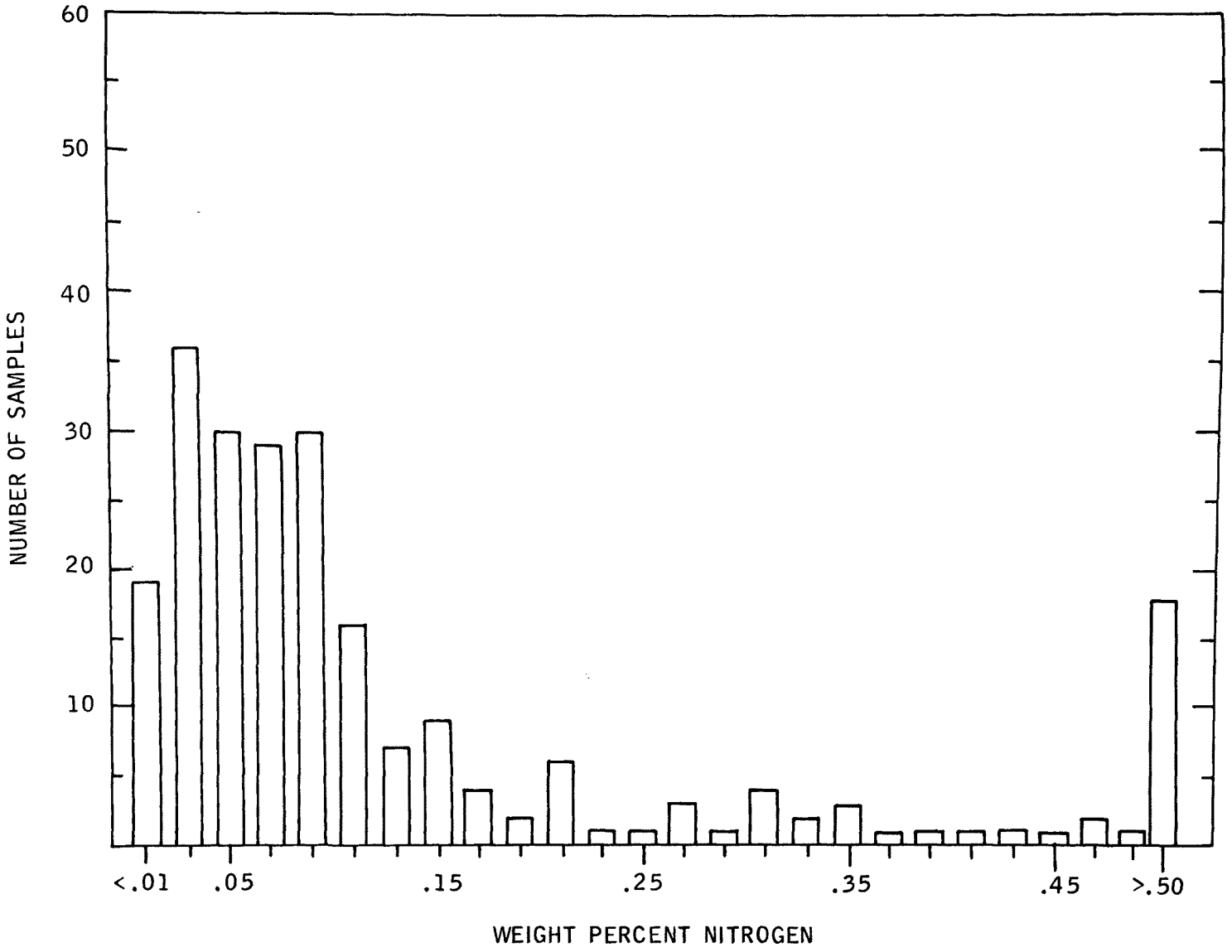

Figure D.2

Frequency Distribution of Nitrogen Content in Crude Oils of U.S. Giant Oil Fields

A number of more or less classical instrumental techniques has been used to obtain much of the trace element data that are available. These techniques include flame photometry, atomic absorption, emission spectroscopy, spectrochemical (colorimetric) analysis and x-ray fluorescence. Although most available trace element data especially on vanadium and nickel have been obtained using these techniques, considerable data are now being accumulated on many elements using activation analysis, a nuclear technique. As some of these data are at variance with those obtained using the more classical methods, activation analysis data are presented in a separate section.

Some trace element data on petroleum were published a number of years ago. It is possible that as a greater understanding of preparative and analytical techniques has developed, the ability to obtain reliable data has increased. It is likely, therefore, that the more recent data are more accurate although this is not necessairly so.

Virtually all of the available trace element data for U.S. oil fields were used to compile Table D.2. Included are the state, field, analytical method used if available, year of publication and the source of the data. Data are presented from all fields even those that are not significant producers. Conflicting data are also present for certain fields. Data from numerous published sources were utilized irrespective of analytical method or year of publication. No data were averaged. The search was limited to the following elements: V, Ni, Fe, As, Be, Cd, Hg, Se, Sb, Ba, Cr, Pb, Mn, Mo, Te, Sn. However, for the most part, data were found only for 10 of these elements. Data are presented in the order V, Ni, Fe, Ba, Cr, Mn, Mo, Sn plus the available data for other elements.

The trace element data presented in Table D.2 indicate that, in general, the lowest metal content domestic crudes are from the coastal and offshore fields of Louisiana and Texas. The highest metal content crudes are found in California. This parallels the observations made for sulfur and nitrogen. It is not surprising that the levels of nitrogen, vanadium and nickel should vary together because some nitrogen and some of these (and other) metals are frequently bound into a prophyrin ring. This type of chelate coordination complex is known for its high stability. All of the volatile metal compounds present in crude oil are metalloporphyrins. The nature of the nonvolatile metal compounds is not completely understood although they too may be complexes with more than one porphyrin ring or simple porphyrins with sizeable asphaltic side chains.

Data obtained from the Cymric field of California's San Joaquin Valley are worthy of comment. The high mercury levels reported for this field are in no way representative of domestic production in general or of California production in particular. Cymric's high mercury content can be attributed to its location on the southeast prolongation of the main mercury belt east of the San Andreas fault. It is, therefore, not surprising that the mercury ore cinnabar found in this region is saturated with hydrocarbons and that crude oil hydrocarbons appear to be saturated with mercury.

Table D.2

Trace Element Content of U.S. Crude Oils

State and Field	Trace Element, ppm V	Ni	Fe	Ba	Cr	Mn	Mo	Sn	Hg	Analytical Method	Year
ALABAMA											
Toxey	9	14								Emission spectroscopy	1971
Toxey	10	16								Emission spectroscopy	1971
ALASKA											
Kuparuk, Prudhoe Bay	32	13								Emission spectroscopy	1971
Kuparuk, Prudhoe Bay	28	12								Emission spectroscopy	1971
McArthur River, Cook Inlet	nd	nd								Emission spectroscopy	1971
Prudhoe Bay	31	11								Emission spectroscopy	1971
Put River, Prudhoe Bay	16	6								Emission spectroscopy	1971
Redoubt Shoal, Cook Inlet	nd	4								Emission spectroscopy	1971
Trading Bay, Cook Inlet	nd	nd								Emission spectroscopy	1971
ARKANSAS											
Brister, Columbia	nd	nd								Emission spectroscopy	1971
El Dorado, East	12	11								Emission spectroscopy	1971
Schuler	15.2	10.3	1.2	<1	<1	<1	nd	nd		Emission spectroscopy	1961
Smackover	nd	4								Emission spectroscopy	1971
Stephens-Smart	18.5	22.7	6.3	<1	<1	<1	nd	<1		Emission spectroscopy	1961
Tubal, Union	nd	nd								Emission spectroscopy	1971
West Atlanta	<1	<1	<1	<1	<1	<1	nd	nd		Emission spectroscopy	1961
CALIFORNIA											
Ant Hill	14.3	66.5	28.5	<1	<1	nd	nd	nd		Emission spectroscopy	1961
Arwin	9.0	28.0								Emission spectroscopy	1956
Bradley Sands	134.5	--								(1)	1958
Cat Canyon	128	75								Emission spectroscopy	1971
Cat Canyon	209	102								Emission spectroscopy	1971
Coalinger	5.1	21.9	5.1	<1	<1	<1	<1	nd		Emission spectroscopy	1961
Coal Oil Canyon	6.0	20.0								Emission spectroscopy	1956
Coles Levee	11.0	31.0								Emission spectroscopy	1956
Coles Levee	2.2	21.6	2.2	<1	<1	nd	<1	nd		Emission spectroscopy	1961
Cuyama	10.0	32.0								Emission spectroscopy	1956
Cymric	30.0	43.0								Emission spectroscopy	1956
Cymric	0.8	2.3	2.0							Emission spectroscopy	1961
Cymric									2.6, 2.4, 1.9	Emission spectroscopy	1961
Cymric	0.6	1.1	2.0							Emission spectroscopy	1961
Cymric									21.0, 14.0, 2.9	Emission spectroscopy	1961
Cymric	1.0	2.0	2.0							Emission spectroscopy	1961
Edison	6.0	11.0								Emission spectroscopy	1956
Elk Hills	8.3	38.5	38.5	<1	<1	<1	<1	nd		Emission spectroscopy	1961
Elwood South	nd	11								Emission spectroscopy	1971
Gibson	37	125								X-ray fluorescence	1969
Gots Ridge	188	80								Emission spectroscopy	1971
Helm	14.0	27.0								Emission spectroscopy	1956
Helm	2.5	10.5	2.5	<1	<1	nd	nd	<1		Emission spectroscopy	1961
Huntington Beach	29	104								Emission spectroscopy	1971
Inglewood	125.7	125.7	125.7	<1	1.3	nd	<1	nd		Emission spectroscopy	1961
Kettleman	34.0	35.0	24.0							Colorimetric	1952
Kettleman Hills	11.0	24.0								(1)	1958
Las Flores	106.5	--								(1)	1958
Lompoc	37.6	--								(1)	1958
Lompoc	199	90								Emission spectroscopy	1971
Lost Hills	39.0	8.0								Emission spectroscopy	1956
Midway	82.6	82.6	82.6	1.8	1.8	<1	<1	nd		Emission spectroscopy	1961
Nicolai	246.5	--								(1)	1958
North Belridge	--	107								X-ray fluorescence (inter. std)	1959
North Belridge	--	80								Colorimetric	1959
North Belridge	--	83								Emission spectroscopy	1959
North Belridge	23	83								X-ray fluoresc. (ext. std.)	1960
Orcutt	162.5	--								(1)	1958
Oxnard	403.5	--								(1)	1958
Purisma	218.5	--								(1)	1958
Raisin City	8.0	21.0								Emission spectroscopy	1956

(1) Not specified.

nd Sought but not detected.

Table D.2 (Cont'd)

State and Field	Trace Element, ppm V	Ni	Fe	Ba	Cr	Mn	Mo	Sn	As	Analytical Method	Year
Rio Bravo	--	2.2								X-ray fluorescence (int. std.)	1962
Rio Bravo	--	--	2.6							X-ray fluorescence (int. std.)	1960
Rio Bravo	--	--	2.5							Emission spectroscopy	1960
Russell Ranch	12.0	26.0								Emission spectroscopy	1956
San Joaquin	44.8	--								(1)	1958
Santa Maria	223	97	17							Colorimetric	1952
Santa Maria	202	--								(1)	1958
Santa Maria	180	106								Emission spectroscopy	1956
Santa Maria	280	130								Emission spectroscopy	1960
Santa Maria Valley	207	97								Emission spectroscopy	1971
Santa Maria Valley	240	--								X-ray fluorescence (int. std.)	1960
Santa Maria Valley	280	--								X-ray fluorescence (int. std.)	1960
Santa Maria Valley	174	174	1.7	<1	1.7	<1	4.0	nd		Emission spectroscopy	1961
Signal Hill	28	--								(1)	1958
Signal Hill	25	57								Emission spectroscopy	1956
Tejon Hills	64	44								Emission spectroscopy	1956
Ventura	42	51								Emission spectroscopy	1956
Ventura	49	33	31							Colorimetric	1952
Ventura Avenue	25.2	--								(1)	1958
Wheeler Ridge	7	1.9								Emission spectroscopy	1956
Wilmington	43	61								Emission spectroscopy	1956
Wilmington	41	46	28							Colorimetric	1952
Wilmington	53	51								Emission spectroscopy	1971
Wilmington	--	53								X-ray fluorescence (int. std.)	1959
Wilmington	--	60								X-ray fluorescence (int. std.)	1959
Wilmington	46	60								Emission spectroscopy	1960
Wilmington	36.0	84	36	3.6	<1	nd	1	nd		Emission spectroscopy	1961
COLORADO											
Badger Creek	<1	<1	<1	<1	<1	<1	<1	<1		Emission spectroscopy	1961
Badger Creek	<1	<1	<1	<1	nd	<1	<1	<1		Emission spectroscopy	1961
Gramps	<1	<1	<1	<1	<1	<1	<1	<1		Emission spectroscopy	1961
Gramp	<1	<1	<1	<1	<1	<1	<1	<1		Emission spectroscopy	1961
Hiawatha	<1	<1	<1	<1	<1	<1	nd	<1		Emission spectroscopy	1961
Moffat Dome	<1	<1	<1	<1	<1	<1	<1	<1		Emission spectroscopy	1961
Rangely	2.7	<1	<1	<1	<1	<1	nd	<1		Emission spectroscopy	1961
Rangely	<1	<1	6.6	<1	<1	<1	<1	<1		Emission spectroscopy	1961
Rangely	<1	<1	2.7	<1	<1	<1	<1	<1		Emission spectroscopy	1961
Seep	0.24	4.70								Emission spectroscopy	1956
White River Area	<1	<1	96.0	<1	<1	2.2	nd	2.2		Emission spectroscopy	1961
FLORIDA											
Jay	nd	1								Emission spectroscopy	1971
ILLINOIS											
Loudon	1.22	0.62	0.57							Emission spectroscopy	1952
Loudon	0.56	--								(1)	1958
KANSAS											
Brewster	2.1	1.3	<1	<1	<1	nd	nd	nd		Emission spectroscopy	1961
Brewster	<1	3.9	<1	<1	<1	<1	nd	nd		Emission spectroscopy	1961
Brock	1	2.4	10.2	<1	<1	<1	<1	nd		Emission spectroscopy	1961
Coffeyville	3.8	1.2	7.2	<1	<1	<1	<1	<1		Emission spectroscopy	1961
Cunningham	44.2	9.9	<1	<1	<1	<1	nd	nd		Emission spectroscopy	1961
Cunningham	24.0	24.0	<1	<1	<1	<1	nd	nd		Emission spectroscopy	1961
Iola	15.6	9.0	3.9	2	<1	<1	nd	nd		Emission spectroscopy	1961
Iola	4.5	4.5	<1	<1	<1	<1	nd	nd		Emission spectroscopy	1961
"Kansas-1"	--	>5							<.021	Emission spectroscopy	1966
"Kansas-2"	--	>21							<.08	Emission spectroscopy	1966
McLouth	<1	6.3	<1	<1	<1	<1	<1	nd		Emission spectroscopy	1961
Otis Albert	21.3	6.0	<1	<1	<1	<1	<1	nd		Emission spectroscopy	1961
Otis Albert	39.0	9.1	9.1	<1	<1	<1	<1	<1		Emission spectroscopy	1961
Pawnee Rock	12.3	3.4	<1	<1	<1	<1	nd	nd		Emission spectroscopy	1961
Rhodes	145	--								X-ray fluorescence (int. std.)	1960
Rhodes	165	--								Emission spectroscopy	1960
Rhodes	133	--								X-ray fluorescence (int. std.)	1960
Rhodes	--	36								X-ray fluorescence (int. std.)	1960
Rhodes	--	38								Emission spectroscopy	1960
Rhodes	--	32								X-ray fluorescence (int. std.)	1959
Solomon	30	7	<1	<1	<1	<1	nd	nd		Emission spectroscopy	1961

(1) Not specified
nd Sought but not detected

Table D.2 (Cont'd)

State and Field	Trace Elements, ppm V	Ni	Fe	Ba	Cr	Mn	Mo	Sn	As	Analytical Method	Year
LOUISIANA											
Bay Marchard	nd	2								Emission spectroscopy	1971
Colquitt, Clairborne	nd	nd								Emission spectroscopy	1971
Colquitt, Clairborne	nd	nd								Emission spectroscopy	1971
Colquitt, Calirborne (Smackover B)	nd	nd								Emission spectroscopy	1971
Delta (West) Offshore, Block 117	nd	2								Emission spectroscopy	1971
Delta (West) Block 27	nd	2								Emission spectroscopy	1971
Delta (West) Block 41	nd	2								Emission spectroscopy	1971
Eugene Island, Offshore, Block 276	4	nd								Emission spectroscopy	1971
Eugene Island, Offshore, Block 238	nd	nd								Emission spectroscopy	1971
Lake Washington	nd	4								Emission spectroscopy	1971
Main Pass, Block 6	nd	3								Emission spectroscopy	1971
Main Pass, Block 41	nd	1								Emission spectroscopy	1971
Olla	<1	5.56	0.07							Emission spectroscopy	1952
Ship Shoal, Offshore, Block 176	nd	nd								Emission spectroscopy	1971
Ship Shoal, Offshore, Block 176	nd	nd								Emission spectroscopy	1971
Ship Shoal, Block 208	nd	2								Emission spectroscopy	1971
Shongaloo, N. Red Rock	nd	nd								Emission spectroscopy	1971
South Pass, Offshore, Block 62	nd	4								Emission spectroscopy	1971
Timbalier, S., Offshore, Block 54	nd	nd								Emission spectroscopy	1971
MICHIGAN											
Trent	--	0.23								Emission spectroscopy	1956
MISSISSIPPI											
Baxterville, Lamar and Marion	40	15								Emission spectroscopy	1971
Heidelberg	15.35	6.02	1.78							Emission spectroscopy	1952
Mississippi	--	.7							<.003	Emission spectroscopy	1966
Tallhalla Creek, Smith	nd	nd								Emission spectroscopy	1971
Tallhalla Creek, Smith	nd	nd								Emission spectroscopy	1971
Tallhalla Creek, Smith (Smackover)	nd	nd								Emission spectroscopy	1971
Tingley, Yazoo	7	5								Emission spectroscopy	1971
MONTANA											
Bell Creek	nd	2								Emission spectroscopy	1971
Big Wall	24	13.2		<1	<1	<1	<1	nd		Emission spectroscopy	1961
Soap Creek	132	13.2		<1	<1	<1	<1	nd		Emission spectroscopy	1961
NEW MEXICO											
Rattlesnake	<1	<1	<1	<1	<1	<1	<1	nd		Emission spectroscopy	1961
Rattlesnake	<1	<1	<1	<1	<1	<1	<1	nd		Emission spectroscopy	1961
Table Mesa	<1	<1	9.9	<1	<1	<1	<1	<1		Emission spectroscopy	1961
OKLAHOMA											
Allurve (Nowata)	<1	<1	1.4	6.0	<1	<1	<1	<1		Emission spectroscopy	1961
Allurve (Nowata)	1.1	1.2	51.0	11.9	<1	<1	nd	<1		Emission spectroscopy	1961
Allurve (Nowata)	<1	6.0	1.4	6.0	<1	<1	<1	<1		Emission spectroscopy	1961
Bechel	--	0.11								Emission spectroscopy	1956
Burbank	nd	nd								Emission spectroscopy	1971
Cary	0.15	0.65								Emission spectroscopy	1956
Chelsea (Nowata)	1.4	1.4	27.0	6.3	<1	<1	nd	no		Emission Spectroscopy	1961
Chelsea (Nowata)	<1	<1	6.0	<1	<1	<1	<1	<1		Emission Spectroscopy	1961
Chelsea (Nowata)	<1	<1	<1	3.0	<1	<1	nd	<1		Emission Spectroscopy	1961
Cheyarha	0.32	0.70								Emission spectroscopy	1956
Cheyarha	0.34	0.95								Emission spectroscopy	1956
Cheyarha	0.21	0.36								Emission spectroscopy	1956
Cheyarha	0.36	4.10								Emission spectroscopy	1956
Cromwell	0.23	0.80								Emission spectroscopy	1956
Cromwell	0.11	0.23								Emission spectroscopy	1956
Cromwell	0.10	0.23								Emission spectroscopy	1956
Cromwell	--	0.27								Emission spectroscopy	1956
Cromwell	0.17	0.42								Emission spectroscopy	1956
Cromwell	--	0.23								Emission spectroscopy	1956
Dill	0.23	2.10								Emission spectroscopy	1971
Dover, Southeast	nd	nd								Emission spectroscopy	1956
Dustin	--	0.36								Emission spectroscopy	1956
E. Lindsay	--	0.10								Emission spectroscopy	1956
E. Seminole	0.23	0.46								Emission spectroscopy	1956
E. Yeager	--	0.12								Emission spectroscopy	1956
Fish	--	0.23								X-ray fluorescence (int. std.)	1960
Glen Pool	--	--	5.0								

(1) Not specified

nd Sought but not detected

Table D.2 (Cont'd)

State and Field	Trace Element, ppm V	Ni	Fe	Ba	Cr	Mn	Mo	Sn	Analytical Method	Year
Grief Creek	0.10	0.42							Emission spectroscopy	1956
Hawkins	2.10	8.50							Emission spectroscopy	1956
Hawkins	0.72	3.50							Emission spectroscopy	1956
Horns Corner	--	0.70							Emission spectroscopy	1956
Katie	0.17	0.52							Emission spectroscopy	1956
Katie	0.48	1.60							Emission spectroscopy	1956
Katie	0.29	1.00							Emission spectroscopy	1956
Katie	0.24	1.00							Emission spectroscopy	1956
Kendrick	<1	<1	<1	<1	<1	<1	nd	nd	Emission spectroscopy	1961
Konawa	0.10	0.65							Emission spectroscopy	1956
Laffoon	44.0	20.2	1.5	<1	<1	<1	nd	nd	Emission spectroscopy	1961
Little River	0.17	1.10							Emission spectroscopy	1956
Middle Gilliland	<1	<1	<1	<1	<1	<1	nd	nd	Emission spectroscopy	1961
Naval Reserve	<1	<1	<1	<1	<1	<1	nd	nd	Emission spectroscopy	1961
New England	<1	<1	<1	nd	<1	<1	nd	nd	Emission spectroscopy	1961
N. Dill	0.13	1.45							Emission spectroscopy	1956
N. E. Castle Ext.	0.29	1.50							Emission spectroscopy	1956
N. E. Elmore	0.15	0.60							Emission spectroscopy	1956
N. E. Elmore	0.17	0.70							Emission spectroscopy	1956
N. Okemah	0.11	0.70							Emission spectroscopy	1956
N. W. Horns Corner	--	0.10							Emission spectroscopy	1956
Olympia	0.88	2.40							Emission spectroscopy	1956
Osage City	2.9	1.6	6.9	nd	<1	<1	nd	nd	Emission spectroscopy	1961
S. W. Maysville	1.36	2.10							Emission spectroscopy	1956
S. W. Maysville	0.25	1.10							Emission spectroscopy	1956
Tatums	--	57							X-ray fluorescence	1959
Tatums	--	56							Emission spectroscopy	1959
Tatums	148	71							X-ray fluorescence (ext. std.)	1960
Weleetka	--	0.10							Emission spectroscopy	1956
W. Holdenville	0.13	0.46							Emission spectroscopy	1956
W. Wewoka	0.14	0.42							Emission spectroscopy	1956
Wewoka	--	0.15							Emission spectroscopy	1956
Wewoka Lake	0.33	0.95							Emission spectroscopy	1956
Wewoka Lake	0.15	0.30							Emission spectroscopy	1956
Wewoka Lake	0.18	0.27							Emission spectroscopy	1956
Wildhorse	2.6	1	<1	nd	nd	<1	nd	nd	Emission spectroscopy	1961
Wynona	<1	<1	1.8	<1	<1	<1	nd	<1	Emission spectroscopy	1961
Wynona	<1	<1	<1	<1	nd	<1	nd	<1	Emission spectroscopy	1961
TEXAS										
Anahuac	0.2	1.1	--						Emission spectroscopy	1958
Brantley-Jackson, Hopkins	nd	nd	--						Emission spectroscopy	1971
Brantley-Jackson, Smackover	nd	nd	--						Emission spectroscopy	1971
Conroe	0.008	<1	0.81						Chemical (V); emission (Ni)	1952
East Texas	4	3	--						Emission spectroscopy	1971
East Texas	1.2	0.88	0.51						Emission spectroscopy	1952
East Texas	1.05	1.69	--						Colorimetric	1952
East Texas	1.2	1.7	3.2						Colorimetric	1952
Edgewood, Van Zandt	nd	nd	--						Emission spectroscopy	1971
Finley	2.6	2	5.7	<1	<1	<1	<1	<1	Emission spectroscopy	1961
Jackson	0.9	1.8	4.4						Colorimetric	1952
Lake Trammel, Nolan			--						Emission spectroscopy	1971
Mirando	1.4	1.9	7.6						Colorimetric	1952
Panhandle, Carson	8	3	--						Emission spectroscopy	1971
Panhandle, Hutchinson	6	5	--						Emission spectroscopy	1971
Panhandle, West Texas	8.4	--	--						(1)	1952
Refugio	0.68	0.70	0.34						Chemical	1952
Refugio, Light	0.56	--	--						(1)	1958
Salt Flat	8.3	1.43	1.71						Chemical	1952
Scurry County	0.8	1.0	3.4						Colorimetric	1952
Sweden	0.8	0.6	--						Emission spectroscopy	1958
Talco	8.8	2.57	2.06						Chemical	1952
Talco	6.16	--	--						(1)	1958
Wasson	15	nd	--						Emission spectroscopy	1971
West Texas	23	5	--						X-ray fluoresc. spectro. (ext. std.) or emission spectroscopy	1960
West Texas	6.7	--	--						(1)	1952
West Texas	6.3	--	--						Emission spectroscopy	1956
West Texas	11.8,	3.8	--						Emission spectroscopy	1958
West Texas	8.5	4.2							Emission spectroscopy	1958
West Texas	8.96	--	--						(1)	1958
West Texas	7.9	4.8	5.1						Colorimetric	1952
West Texas (Imogene)	8.5	1.73	0.88						Chemical	1952
Yates-Pecos	7.8	2.6	0.11						Chemical	1952

(1) Not specified

nd Sought but not detected

Table D.2 (Cont'd)

State and Field	Trace Element, ppm V	Ni	Fe	Ba	Cr	Mn	Mo	Sn	Analytical Method	Year
UTAH										
Duchesne	<1	<1	3.9	3.9	<1	<1	<1	<1	Emission spectroscopy	1961
Duchesne	<1	<1	1.4	<1	<1	<1	<1	<1	Emission spectroscopy	1961
Duchesne County	<1	12.3	12.3	2.9	<1	<1	nd	nd	Emission spectroscopy	1961
Red Wash	nd	nd	--						Emission spectroscopy	1971
Red Wash	nd	nd	--						Emission spectroscopy	1971
Roosevelt	<1	3.2	<1	<1	<1	<1	<1	<1	Emission spectroscopy	1961
Roosevelt	<1	5.4	<1	<1	<1	<1	<1	nd	Emission spectroscopy	1961
Virgin	14.4	14.4	3.4	<1	<1	<1	nd	<1	Emission spectroscopy	1961
Virgin	8.1	8.1	1.9	<1	<1	<1	nd	<1	Emission spectroscopy	1961
West Pleasant Valley	11.4	57	1140.0	26.6	1.1	11.4	2.7		Emission spectroscopy	1961
Wildcat	0.14	7.5							Emission spectroscopy	1956
WYOMING										
Beaver Creek	nd	nd							Emission spectroscopy	1971
Big Horn Mix	15.97	3.6	0.8						Emission spectroscopy	1952
Bison Basin	1.1	2.7	<1	<1	<1	<1	<1	<1	Emission spectroscopy	1961
Circle Ridge	48	11.2	<1	<1	<1	<1	<1	nd	Emission spectroscopy	1961
Corral Creek	59	11	--						Emission spectroscopy	1971
Crooks Gap	2.1	2.2	1.0	<1	<1	<1	<1	<1	Emission spectroscopy	1961
Dallas	66	15.4	<1	<1	<1	<1	<1	nd	Emission spectroscopy	1961
Dallas	66	66	1.5	<1	<1	<1	<1	nd	Emission spectroscopy	1961
Derby	39	39	<1	<1	<1	<1	<1	nd	Emission spectroscopy	1961
Elk Basin	38	9.2	<1	<1	<1	<1	<1	nd	Emission spectroscopy	1961
Elk Basin	8.4	2	<1	<1	<1	<1	<1	nd	Emission spectroscopy	1961
Garland	36	24	3.6	<1	<1	<1	<1	nd	Emission spectroscopy	1961
Grass Creek	106.4	28.9	1.1	<1	<1	<1	<1	nd	Emission spectroscopy	1961
Half Moon	98.6	27.8	1.7	<1	<1	<1	<1	nd	Emission spectroscopy	1961
Half Moon	50.6	<1	<1	<1	<1	<1	<1	nd	Emission spectroscopy	1961
Hamilton Dome	106.4	26.6	<1	<1	<1	<1	<1	nd	Emission spectroscopy	1961
Hamilton Dome	55.2	8.6	<1	<1	<1	<1	<1	nd	Emission spectroscopy	1961
Hamilton Dome	106.4	24.3	2.7	<1	<1	<1	<1	nd	Emission spectroscopy	1961
Little Mo	83	16	--						Emission spectroscopy	1971
Lost Soldier	<1	<1	<1	<1	<1	<1	<1	<1	Emission spectroscopy	1961
Lost Soldier	<1	<1	<1	<1	<1	<1	<1	<1	Emission spectroscopy	1961
Lost Soldier	<1	<1	<1	<1	<1	<1	<1	<1	Emission spectroscopy	1961
Mitchell Creek	72.0	72.0	7.2	<1	<1	<1	<1	nd	Emission spectroscopy	1961
North Oregon Basin	77.0	22.4	1.0	<1	<1	<1	<1	nd	Emission spectroscopy	1961
North Oregon Basin	72.0	14.8	<1	<1	<1	<1	<1	nd	Emission spectroscopy	1961
North Oregon Basin	60.0	11.5	<1	<1	<1	<1	<1	nd	Emission spectroscopy	1961
Oil Mountain	144.0	33.6	<1	<1	<1	<1	<1	nd	Emission spectroscopy	1961
Pilot Butte	45.0	10.5	<1	<1	<1	<1	<1	nd	Emission spectroscopy	1961
Pilot Butte	24.0	5.6	<1	<1	<1	<1	nd	nd	Emission spectroscopy	1961
Pine Ridge	nd	nd	--						Emission spectroscopy	1971
Prescott No. 3	21.0	7.1	--						(1)	1959
Recluse	nd	nd	--						Emission spectroscopy	1971
Roelis	88	15	--						Emission spectroscopy	1971
Salt Creek	84.0	8.4	<1	<1	<1	<1	nd	nd	Emission spectroscopy	1961
Salt Creek	1.4	1.4	<1	<1	<1	<1	nd	nd	Emission spectroscopy	1961
Salt Creek	<1	<1	23.4	<1	<1	<1	nd	nd	Emission spectroscopy	1961
Salt Creek	<1	3.9	3.9	<1	<1	<1	nd	nd	Emission spectroscopy	1961
Skull Creek	--	0.42							Emission spectroscopy	1956
South Casper Creek	12.9	3.0	<1	<1	<1	<1	<1	nd	Emission spectroscopy	1961
South Fork	21.9	21.9	<1	<1	<1	<1	<1	nd	Emission spectroscopy	1961
South Spring Creek	102.0	102.0	<1	<1	<1	<1	<1	nd	Emission spectroscopy	1961
South Spring Creek	117.0	27.3	<1	<1	<1	<1	<1	nd	Emission spectroscopy	1961
Steamboat Butte	29.1	6.79	<1	<1	<1	<1	<1	nd	Emission spectroscopy	1961
Washakie	74.0	25.0	--						(1)	1934
Winkleman Dome	48.0	11.2	1	<1	<1	<1	<1	nd	Emission spectroscopy	1961

(1) Not specified

nd Sought but not detected.

D.2 Shale Oil

The term oil shale covers a wide variety of fine-grained sedimentary rocks that contain organic material. Upon destructive distillation much of this organic material is released largely as an oil which is termed shale oil. The rock is only slightly soluble in organic solvents and frequently does not appear or feel oily. It is tough, elastic, resistant to fracture and has essentially no permeability or porosity.

The organic component of oil shale can be divided into two parts, a part that is soluble in organic solvents and a part that is not. It is the insoluble part, generally termed kerogen, which constitutes the bulk of the shale organic matter responsible for shale oil. The composition of kerogen varies considerably from shale deposit to deposit but it is thought to consist of largely cyclic polymeric material probably held together by cross linkages involving hetero atoms such as nitrogen, sulfur and oxygen.

There is no truly typical shale oil but shale oils have some properties in common. In general, most shale oils are black, waxy and possess high pour points. Relative to conventional crude oils, the nitrogen content of crude shale oil is high although the sulfur level is moderate.

Oil shales are widely distributed geographically. However, only certain deposits are considered to be sufficiently rich in kerogen to warrant commercial development. In the U.S. oil shale deposits are found in Tennessee and Nevada but the most important are in the Green River Formation of Colorado, Utah and Wyoming. The Green River formation has received attention as a possible source of fuels. Within this formation, shale deposits underlie an area of 17,000 square miles in four basins: the Piceance Creek basin of Colorado, the Unita basin of Utah and the Washakie and Green River basins of Wyoming.

The energy potential of the Green River formation has been estimated to be more than 1 trillion barrels of oil with 600 billion coming from easily accessible, richer deposits which contain more than 25 gallons of oil per ton of shale. Shale deposits vary in accessability from those at the surface to very deeply buried shales in the Unita basin. The outcrop called the Mahogany Ledge (because of its color) is the location of an experimental mine and consequently has been used to study mining and retorting methods. Most U.S. elemental shale oil analyses come from shale mined here. The oil shales of the Mahogany zone will probably be the first to be developed commercially.

Table D.3 presents sulfur and nitrogen data of crude shale oil obtained from shale deposits throughout the world. While many of the samples were retorted using different techniques, it has been found that generally the retorting method utilized has relatively little effect on the characteristics of the oil produced unless extreme

Table D.3

SULFUR AND NITROGEN CONTENT OF CRUDE SHALE OILS

Country	Formation/Location	Sulfur, weight per cent	Nitrogen, weight per cent
United States	Green River, Colorado	0.74	1.78
	Green River	0.69	2.13
	Green River	0.77	1.57
	Green River	0.51	2.10
	Green River	0.67	1.97
	Green River	0.72	1.73
	Green River	0.71	1.89
	Green River	0.64	1.95
	Green River*	1.10	1.73
	Green River	0.66	1.76
	Green River	0.59	1.96
	De Kalb County, Tenn.	3.38	0.88
Australia	Glen Davis, N.S.W.	0.56	0.52
Brazil	Paraiba Valley	0.41	0.98
China	Hwatien Mine, Manchuria	0.19	0.84
Estonia	Kukersite	1.10	0.10
France	Autun	0.51	0.90
	Severac	3.00	0.53
	Severac	3.40	0.65
	St. Hilaire	0.61	0.54
Israel	Um Barek	6.2	1.40
Lebanon	--	1.5	0.6
New Zealand	Orepuki	0.64	0.60
Scotland	--	0.35	0.77
South Africa	Boksburg, Transvaal	0.64	0.85
	Breyten, Transvaal	0.61	--
Spain	Puertollano	0.40	0.68
Sweden	Kvarntorp	1.65	0.68
Thailand	Maesod Area	0.41	1.10

* Core drilling sample.

retorting conditions have been employed. Of the deposits listed, only the Green River can be considered to be a possible commercial source of fuels for consumption in the U.S. The others are included for the purposes of comparison.

Crude shale oil derived from the Green River formation possesses an unusually high nitrogen level. It has been found that generally the nitrogen content is higher and the sulfur level lower in the higher boiling shale oil fractions. As of this writing, no metal content data for shale oil appear to be available in the published literature. An unpublished analysis by the Bureau of Mines of shale oil obtained from Green River shale indicates that this oil is high in iron and low in vanadium and nickel. The results obtained were: vanadium, 0 ppm; nickel, 4 ppm; and iron 67 ppm. Most of the metals were associated with the asphaltene fraction.

The nitrogen compounds present in shale oil are particularly troublesome in processing and must be removed before shale can be converted into useful liquid or gaseous fuels. Nitrogen removal can be accomplished by severe hydrogen treatment which also reduces the sulfur content to a low level.

APPENDIX E

Table of Conversion Units

APPENDIX E

TABLE OF CONVERSION UNITS

To Convert From	To	Multiply By
Btu	Calories, kg	0.25198
Btu/pound	Calories, kg/kilogram	0.55552
Cubic feet/day	Cubic meters/day	0.028317
Feet	Meters	0.30480
Gallons/minute	Cubic meters/minute	0.0037854
Inches	Centimeters	2.5400
Pounds	Kilograms	0.45359
Pounds/Btu	Kilograms/calorie, kg	1.8001
Pounds/hour	Kilograms/hour	0.45359
Pounds/square inch	Kilograms/square centimeter	0.070307
Tons	Metric tons	0.90719
Tons/day	Metric tons/day	0.90719

In line with usage current when this work was begun, in this report M represents thousand and MM represents million.

TECHNICAL REPORT DATA
(Please read Instructions on the reverse before completing)

1. REPORT NO. EPA-600/2-76-101	2.	3. RECIPIENT'S ACCESSION NO.
4. TITLE AND SUBTITLE Evaluation of Pollution Control in Fossil Fuel Conversion Processes: Final Report		5. REPORT DATE April 1976
		6. PERFORMING ORGANIZATION CODE
7. AUTHOR(S) E.M. Magee		8. PERFORMING ORGANIZATION REPORT NO. Exxon/GRU.16DJ.76
9. PERFORMING ORGANIZATION NAME AND ADDRESS Exxon Research and Engineering Company P.O. Box 8 Linden, New Jersey 07036		10. PROGRAM ELEMENT NO. 1AB013; ROAP 21ADD-023
		11. CONTRACT/GRANT NO. 68-02-0629
12. SPONSORING AGENCY NAME AND ADDRESS EPA, Office of Research and Development Industrial Environmental Research Laboratory Research Triangle Park, NC 27711		13. TYPE OF REPORT AND PERIOD COVERED Final; 6/72-1/76
		14. SPONSORING AGENCY CODE EPA-ORD

15. SUPPLEMENTARY NOTES Project officer for this report is W.J. Rhodes, Mail Drop 61, Ext 2851. This is the final summary of EPA-R2-73-249 and the EPA-650/2-74-009 series reports, already published.

16. ABSTRACT The review gives an overview of work, between June 1972 and January 1976, on various environmental aspects of fossil fuels. Details of this work is presented in 14 reports published during this same period. The details include potential pollutants in fossil fuels; quantities of solid, liquid, and gaseous effluents from coal treatment and conversion to gaseous and liquid fuels; and an analytical test plan for coal conversion systems. The overview report discusses commonality and differences in the reviewed processes with emphasis on factors which might affect the environment when the processes are in commercial use. Due to the lack of a sufficient data base, data and research and development needs are also addressed.

17. KEY WORDS AND DOCUMENT ANALYSIS

a. DESCRIPTORS	b. IDENTIFIERS/OPEN ENDED TERMS	c. COSATI Field/Group
Air Pollution	Air Pollution Control	13B
Fossil Fuels	Stationary Sources	21D
Coal	Fuel Conversion	
Coal Preparation		08I
Gasification		13H, 07A
Liquefaction		07D

18. DISTRIBUTION STATEMENT Unlimited	19. SECURITY CLASS *(This Report)* Unclassified	21. NO. OF PAGES 311
	20. SECURITY CLASS *(This page)* Unclassified	22. PRICE

EPA Form 2220-1 (9-73)