EPA-600/2-76-171
June 1976

Environmental Protection Technology Series

EVALUATION OF MONITORING SYSTEMS FOR POWER PLANT AND SULFUR RECOVERY PLANT EMISSIONS

Environmental Sciences Research Laboratory
Office of Research and Development
U.S. Environmental Protection Agency
Research Triangle Park, North Carolina 27711

RESEARCH REPORTING SERIES

Research reports of the Office of Research and Development, U.S. Environmental Protection Agency, have been grouped into five series. These five broad categories were established to facilitate further development and application of environmental technology. Elimination of traditional grouping was consciously planned to foster technology transfer and a maximum interface in related fields. The five series are:

1. Environmental Health Effects Research
2. Environmental Protection Technology
3. Ecological Research
4. Environmental Monitoring
5. Socioeconomic Environmental Studies

This report has been assigned to the ENVIRONMENTAL MONITORING series. This series describes research conducted to develop new or improved methods and instrumentation for the identification and quantification of environmental pollutants at the lowest conceivably significant concentrations. It also includes studies to determine the ambient concentrations of pollutants in the environment and/or the variance of pollutants as a function of time or meteorological factors.

This document is available to the public through the National Technical Information Service, Springfield, Virginia 22161.

EVALUATION OF MONITORING SYSTEMS FOR POWER PLANT AND SULFUR RECOVERY PLANT EMISSIONS

By

Malbone W. Greene
Robert L. Chapman
Samuel C. Creason
R. Neal Harvey
Glen A. Heyman
William R. Pearson

BECKMAN INSTRUMENTS, INC.
ADVANCED TECHNOLOGY OPERATIONS
ANAHEIM, CA 90620

Contract No. 68-02-1743
Project 1363-2678-800

Project Officer

James B. Homolya
Emissions Measurement and Characterization Division
Environmental Sciences Research Laboratory
Research Triangle Park, NC 27711

U.S. ENVIRONMENTAL PROTECTION AGENCY
OFFICE OF RESEARCH AND DEVELOPMENT
ENVIRONMENTAL SCIENCES RESEARCH LABORATORY
RESEARCH TRIANGLE PARK, NC 27711

DISCLAIMER

This report has been reviewed by the Environmental Sciences Research Laboratory, U.S. Environmental Protection Agency, and approved for publication. Approval does not signify that the contents necessarily reflect the views and policies of the U.S. Environmental Protection Agency, nor does mention of trade names or commercial products constitute endorsement or recommendation for use.

ABSTRACT

This project was conducted to evaluate a number of commercially available extractive-type sampling and monitoring systems for monitoring sulfur dioxide and hydrogen sulfide source emissions. Evaluation testing was performed at a Fossil Fuel-Fired Power Plant and at a Claus Sulfur Recovery Plant to obtain representative ranges of stack gas temperature, water and particulate loading, and corrosiveness. Tests of calibration error, relative accuracy, two- and twenty-four-hour zero and calibration drifts, response time, and operational period were performed in accordance with published EPA guidelines. The performance in each test was judged against the published EPA performance criteria (EPA-650/2-74-013).

The detailed field test results, the complete Work Plan, sampling interface drawings, the results of evaluations of Compliance Test Methods 6 and 11, miscellaneous observations and results, and a discussion of the calculation and reporting instructions of the EPA guidelines are given in the appendices. A detailed description of the systems evaluated, summaries of the field test results, and relevant comments concerning the results are given in the body of the report.

Because the sites chosen for evaluation testing provided wide ranges of sample temperature, solids and water loading, and SO_2 concentration, the results are considered to be relevant to most stack-gas monitoring problems. Results at the Claus Plant site were somewhat compromised by equipment failures, but two general conclusions may be drawn. First, systems available commercially are capable of meeting the requirements of the guidelines, at least for short-term testing. Secondly, the cost of correctly installing and maintaining such monitoring equipment is probably considerably higher than is generally estimated by the manufacturers.

CONTENTS

		Page
Abstract		iii
List of Figures		vi
List of Tables		vii
Sections		
I	CONCLUSIONS	1
II	RECOMMENDATIONS	8
III	INTRODUCTION	10
	Purpose of Contract	10
	Scope of Contract	11
	General Approach and Background Information	12
	The Fossil-Fuel-Fired Power Station Test Site	14
	The Claus Sulfur Recovery Plant Site	16
	Brief Description of Contract Phases	23
IV	DESCRIPTION OF SYSTEMS EVALUATED	25
	Mechanical Dilution (Disc Diluter) and Electrochemical Monitor	25
	Permeation Dilution Sampling and Monitoring System	28
	Refrigeration Drying and Electrochemical SO_2 Monitor	35
	Reflux Probe, Permeation Drying, and Infrared SO_2 Monitor	37
	H_2S Monitoring at Claus Plant (Before Incinerator)	42
	Data Acquisition System	45
V	BRIEF OUTLINE OF WORK PLAN OBJECTIVES	50
	Comment on Error Calculation	51
	Results of Testing at Fossil-Fuel-Fired Power Plant	52
	Results of Testing at Claus Sulfur Recovery Plant	64
	Summary of Performance Criteria and Test	75
	Comments on Sampling/Interface Systems, and Field Performance	78
VI	APPENDICES	87

FIGURES

No.		Page
1	Power Plant Test Site.	17
2	Power Plant Test Site, Elevation View.	18
3	Claus Plant Site, Plan View.	20
4	Claus Plant Site, Elevation View	21
5	Claus Plant Site	22
6	Disc Diluter Assembly.	26
7	Disc Diluter, Gas Flow Diagram	27
8	Permeation Diluter System.	31
9	Meloy Model FSA-190-2A Dependence Upon Carrier Flow Rate	34
10	Refrigerated Condensor System.	36
11	Reflux Probe and Permeation Dryer Flow Diagram	39
12	Reflux Probe and Permeation Dryer Sampling Interface Enclosure.	40
13	Reflux Probe, Permeation Dryer, and NDIR System. . . .	41
14	Claus Plant H_2S Sampling--Interface System	44
15	Power Plant Test Site Data Acquisition System.	47

TABLES

No.		Page
1	Summary of Performance Criteria and Test Results for Power Plant Tests.	2
2	Summary of Performance Criteria and Test Results for Claus Plant Tests.	3
3	Calibration Error of Systems Evaluated at Power Plant.	53
4	Relative Accuracy of Systems Evaluated at Power Plants	55
5	Summary of Two-Hour Zero and Calibration Test Results for Power Plant Test Site.	57
6	Summary of Twenty-Four-Hour Zero and Calibration Test Results for Power Plant Test Site	58
7	Summary of Response Time Test Results Obtained at Power Plant Site	60
8	Summary of Performance Criteria and Test Results for Power Plant Tests.	62
9	Calibration Error Test Results Obtained Before Transport to and Installation at the Claus Plant Test Site.	65
10	Summary of Relative Accuracy Results Obtained with Three Systems Monitoring the Claus Sulfur Plant Emissions after Incineration	67
11	Summary of Two-Hour Zero and Calibration Test Results Obtained at the Claus Sulfur Recovery Plant.	69
12	Summary of Twenty-Four-Hour Zero and Calibration Test Results Obtained at the Claus Sulfur Recovery Plant	71
13	Summary of Response Time Test Results Obtained at Claus Plant.	74
14	Summary of Performance Criteria and Test Results for Claus Plant Tests.	76
15	Test Results--Low-Concentration Gases.	153
16	Test Results--High-Concentration Gases	153
17	Method 11(H_2S) Test Results	
18	Results of Preliminary Method 6 Correlation Testing at Power Plant	180
19	Example Results for Claus Plant Tests.	192

SECTION I

CONCLUSIONS

The results obtained at the two test sites are summarized in Tables 1 and 2. The results obtained at the Claus Plant, Table 2, should be qualified by noting that only the NDIR System was operating correctly at the start of the test. The other systems' malfunctions were not directly relatable to the application, and were primarily being monitored for degradation by the Claus Plant tail gas sample. They are considered to have performed satisfactorily in this regard, even though many of the errors given in Table 2 exceeded the test performance criteria.

The two following conclusions may be drawn from the experience gained in planning the evaluation tests:

1. The commercially available extractive-type sampling and monitoring systems evaluated are capable of meeting most or all of the requirements of the published guidelines (EPA-650/2-74-013).
2. Obscure problems related to the installation at a given site can result in poor performance and/or failure of any or all of the systems (and peripheral test equipment) evaluated. A great deal of "custom engineering" may be required if good performance and low maintenance costs are to be achieved.

These general conclusions are derived from more specific conclusions in the following paragraphs. Discounting failures of breadboard quality circuit boards, production models of all monitors evaluated will be satisfactory, provided proper sample conditioning exists. The monitors evaluated were as follows:

Table 1. SUMMARY OF PERFORMANCE CRITERIA AND TEST RESULTS FOR POWER PLANT TESTS

Test Performed	Test Performance Criteria from EPA-650/2-74-013	Refrigerated Condensor and Dynasciences Model SS-330	Beckman Reflux Probe, Permeation Dryer, Model 865 NDIR	Permeation Diluter and Dynasciences Model SS-310	Permeation Diluter and Flame Photometric (Meloy)	UV Absorption	*in situ*
Cali-bration Error	5%	3.1% 1.5% 2.4%	4.5% 0.6% 0.6%	(Disc Diluter used for this test only) 4.5, 4.4, 2.7%	4.0% 4.4% 2.1%	N/A	N/A
Relative Accuracy	20%	5.3 to 11.5%	5.3 to 11.4%	6.3 to 10.9%	6.4 to 15.9%	8.3 to 12.7%	6.6% (only 3 data sets
Two-Hour Zero Drift	2%	0.7%	0.9%	0.5%	0.2%	N/A	N/A
Twenty-Four-Hour Zero Drift	4%	0.9% (avg)	1.4% (avg)	1.7% (avg)	1.5% (avg)	N/A	N/A
Two-Hour Calibra-tion Drift	2%	2.7% (avg)	1.5% (avg)	3.0% (avg)	3.5% (avg)	N/A	N/A
Twenty-Four-Hour Calibra-tion Drift	5%	2.6% (avg)	4.5% (avg)	7.3% (avg)	9.0% (avg)	N/A	N/A
Mean Response Time	95% in 600 s	150 s	45 s	120 s	140 s	N/A	N/A
Oper-ational Period	168 hours with-out special maintenance	Maintenance only between two 168-hour tests	Maintenance only between two 168-hour tests	Maintenance only between two 168-hour tests	Maintenance only between two 168-hour tests	N/A	N/A

Table 2. SUMMARY OF PERFORMANCE CRITERIA AND TEST RESULTS FOR CLAUS PLANT TESTS

Test Performed	Test Performance Criteria EPA-650/2-74-012	Beckman Reflux Probe, Permeation Dryer, Model 865 NDIR (SO_2 only)	Permeation Diluter, Dynasciences Model SS-310 (SO_2 only)	Permeation Diluter, Flame Photometric (Meloy) (SO_2 only)	Existing PGC Sample Tap, Houston Atlas Diluter/Monitor (H_2S only)
Calibration Error	5%	12% 2% 0.6%	5% 9% 6.5%	3% 7% 8%	5.4% 2.2%
Relative Accuracy	20%	4 to 10%	10 to 19%	10 to 27%	38 to 44% (against PGC)
Two-Hour Zero Drift	2%	0.8%	4.9% (avg)	2.8% (avg)	6%
Twenty-Four-Hour Zero Drift	4%	1% (avg)	6% (avg)	5% (avg)	20% (avg)
Two-Hour Calibration Drift	2%	2% (avg)	13.5% (avg)	30% (avg)	50%
Twenty-Four-Hour Calibration Drift	5%	10% (avg)	36% (avg)	40% (avg)	98% (avg)
Appropriate Mean Response Time	95% in 600 s	30 s	150 s	200 s	960 s
Operational Period	168 hours without special maintenance	No special maintenance required	No special maintenance given	No special maintenance given	No special maintenance given

- Dynasciences Model SS-310 Ambient Level SO_2 Monitor used at both test sites. (Sensing cell is easily damaged by pressure variations, including altitude during shipment.)
- Dynasciences Model SS-330 Source Level SO_2 Monitor used at Power Plant site only. (Rugged and quite reliable.)
- Meloy Flame Photometric Ambient Level Total Sulfur Monitor used at both sites on SO_2. (Production model expected to perform satisfactorily.)
- Beckman Model 865 NDIR Source Level SO_2 Monitor (with all revisions that took effect prior to November 1974) used at both sites on SO_2.
- Houston/Atlas, Inc., Ambient Sulfur Analyzer used on H_2S at Claus Plant only. (Response is inherently slow, but satisfactory on slowly varying sample.)

The major conclusions with regard to sampling interface system performance are as follows:

- Mechanical dilution appears to be entirely feasible. The Disc Diluter requires further development, but the Houston Atlas Diluter was satisfactory for the two-week evaluation.
- Permeation dilution is feasible, but the Diluter evaluated (Meloy Dyfusatron) requires improved protection from pressure surges.
- Permeation drying is feasible, but the construction materials of the Beckman system evaluated (manufactured by Permapure Products, Inc.) must be improved to achieve an operational life of more than about 60 days on 250 ppm SO_2.
- The conventional Beckman refrigerated condensor sampling system operated with no maintenance and showed only moderate corrosion after about 60 days at the Power Plant.

- The removal of free sulfur in two condensor stages was not entirely satisfactory, but better adjustment of operating parameters is all that appeared to be required.

As examples of obscure sampling problems and failures of peripheral test equipment that were not anticipated, the following specific problems are cited:

- One pneumatically operated ball valve (of three evaluated) tended to stick open, allowing some sample leakage during zero and calibration cycles.
- Water condensed in the permeation diluter sampling system at the Power Plant stack wall at a flow rate of 100 ml/min, but this did not occur in two similar probes handling 10 liters/min of sample. Heating of the mounting flange corrected the difficulty.
- The Esterline-Angus Model D-2020 lost a power supply after about one week of operation at the Power Plant. The reason for the failure is unknown, but it is probable that high ambient temperature and line voltage transients caused it.
- A 1.5-ampere "Slo-Blo" fuse in the teletype failed at about the mid-way point of the Power Plant tests. It was replaced with a one-ampere standard fuse, and the equipment operated satisfactorily for the balance of the Power Plant tests. No reason for the fuse failure was discovered, but a very large line voltage transient may have been the cause.
- Random failures of digital components in the Beckman-designed automatic zero and calibration console occurred at the Power Plant. These failures can be explained by abnormally large voltage transients, combined with a dc power voltage too near the maximum for this type of component. The dc voltage was reduced and no failures occurred at the Claus Plant.

An objective of this contract was to evaluate systems after an installation and troubleshooting effort which could reasonably be expected of a typical industrial customer. Problems such as those enumerated above caused significant delays in the commencement of the formal evaluation testing. While all were actually minor failures, they resulted in a great deal more start-up effort than would be anticipated by an industrial purchaser of such "standard systems." Furthermore, problems such as the sticking valve could go undetected indefinitely. The problem was discovered when it was found that different monitor outputs were obtained when standard gases were passed directly into the monitor, rather than being introduced at the stack-mounted sampling interface housing. A conclusion that such "unexpected" problems should be considered normal for a typical industrial plant seems inescapable.

Compliance Test Method 4 (H_2O) was employed at both sites with questionable results. While the probe was heated as required by the procedure given in the Federal Register, it was concluded that condensate trapped in and/or dislodged from the short, unheated sampling probe to cooled impinger interconnection could have large effects upon the volume of water collected. A revision of the method to include suggested variations in technique would be beneficial to minimize this source of variance in results.

Method 6 (SO_2) gave acceptable results for up to 0.9% SO_2 in nitrogen. The method could be revised to include procedural modifications similar to those described in Appendix D to extend the range of usefulness.

Method 11 (H_2S) is not suitable for H_2S concentrations above about 250 ppm in nitrogen. A significant revision of Method 11 would be required to extend the range of applicability to 1% H_2S.

In general, the guideline procedures and performance criteria (EPA-650/2-74-013) appear to be adequate. However, the speed-of-response requirement is probably not adequately covered by a single value (such as 95% response in 600 seconds) since some combustion processes can be accompanied by more rapid significant changes. Specific requirements are best determined for particular applications.

Finally, a potential interpretation ambiguity of the calculation and reporting instructions of EPA-650/2-74-013 was discovered. The two interpretations result in reported values (sum of absolute values, mean deviation, and 95% confidence interval) which do not differ signicantly. However, the mean values are smaller and the confidence intervals are larger when calculated by the second interpretation rather than by that used for all values reported in the body of this report. The two interpretations are discussed in Appendix F.

SECTION II

RECOMMENDATIONS

Compliance Test Method 6 (SO_2) should be revised to include the minor procedural changes necessary for extension of the range of applicability to 1% SO_2 (which may occur in Claus Plant tail gases). Additional testing to demonstrate that the results are valid is, of course, in order.

Compliance Test Method 11 (H_2S) was shown to be inadequate for use on concentrations of H_2S exceeding several hundred parts per million (ppm). It is recommended that a method capable of determining H_2S up to 1% be developed.

The guidelines for monitoring source emissions published in EPA-650/2-74-013, should be revised to eliminate a potential ambiguity with regard to calculation and reporting instructions. See Appendix H for a discussion of two possible interpretations.

No recommendation for revision of the guideline tests, test procedures, or requirements is justified by the results obtained on this contract. Failure of the systems to meet the requirements in some of the tests appeared to be the result of random component failures which were not related to the application.

It is recommended that any future test of this type be continued for a much longer time. There were signs of corrosion in parts of the sampling systems tested at the Power Plant after about 60 to 70 days of continuous operation. It was concluded that pumps with better corrosion resistance

are desirable for the application, for example, but there was no clear evidence that pump corrosion would have caused system failures within a given operating time. Semi-automatic operation of the systems for several more months, followed by another two-week intensive testing phase, would have provided much more realistic information with regard to the probable cost of maintenance of the systems.

SECTION III

INTRODUCTION

PURPOSE OF CONTRACT

It was the purpose of this contract to evaluate a number of extractive sampling and monitoring systems on both the stack gas of a fossil-fuel-fired power plant employing wet limestone scrubbing for SO_2 removal and on Claus Sulfur Recovery Plant emissions (H_2S, SO_2, and total sulfur) before and after incineration. The major goal of this contract was to provide the Environmental Protection Agency (EPA) with information upon which minimum specifications for continuous extractive-type sampling interface systems could be based. To achieve this goal various sampling systems were to be coupled to appropriate analyzers utilizing various principles of measurement. Thus the sampling and monitoring systems evaluated at each site were to be representative of the commercially available extractive-type sampling interface systems. In addition, the initial checkout and debugging of the systems after field installation were to be limited to essentially the level-of-effort that could reasonably be expected for an ordinary industrial customer.

The basic approach chosen was to evaluate a number of sampling interface systems concurrently, as the most cost effective means of obtaining directly comparable test results. The current EPA Compliance Test Methods were to be used for obtaining reference values against which the instrumental results could be judged. The results, therefore, were to be indicative of those which could reasonably be expected by an industrial user of commercially available sampling interface systems and of the EPA Compliance Test Methods.

The specific instrumental tests were to be performed using published preliminary EPA procedures, techniques, and performance requirements to determine the degree to which the systems evaluated were capable of meeting the relevant published requirements for fossil-fuel-fired steam generators. The evaluation test results would, therefore, be of direct value in the formulation of minimum performance specifications for extractive-type sampling interface systems along the lines outlined in the previous EPA publication.

SCOPE OF CONTRACT

The scope of the contract effort was limited to the work necessary to accomplish the goals outlined above. Available government furnished equipment (GFE) was utilized to the maximum possible extent in the interests of cost effectiveness. Other necessary equipment was leased whenever possible to limit the material expenditures to items that were essentially expendable. Design and fabrication were limited to those items of peripheral equipment which were not already available but were required for interfacing the monitors to the sampling point. For example, a requirement for automatic standardization made it convenient to design sample handling interfaces with common solenoid valve actuation requirements. This approach also met a requirement for introducing standard gases as close to the actual sampling point as possible. Sample probes and interface housings were designed (where necessary) and fabricated under the contract except for a GFE dilution probe system. Similarly, the data acquisition system was designed to use available GFE and contractor test equipment at no cost to the contract other than the data system design, interconnection, testing, and maintenance.

Instrumental output data were acquired on both analog strip chart recorders (contractor furnished) and by a digital data logger with Teletype interface including a punch for generating a punched paper tape record of all digitized data (GFE). The contract scope permitted final data

reduction from either (or both) analog or digital data, to permit selection of the most cost effective approach. The two data systems were independent, providing redundancy to reduce the probability of lost time due to the failure of such peripheral test equipment.

Location of test sites and arranging for owner permission to use the sites was a contractor responsibility. The contract scope encompassed designing, fabricating, and/or modifying the test facilities as necessary to interface with the test equipment, and restoration of the sites at the conclusion of the test program.

Contractor effort in the hardware design and familiarization phase included training of field personnel in the use of EPA Compliance Test Methods 4 (H_2O), 6 (SO_2), and 11 (H S). Significant results obtained in high-range testing of Methods 6 and 11 are discussed in Appendix D of this report.

GENERAL APPROACH AND BACKGROUND INFORMATION

The type of sites chosen for evaluation testing had particular merit with regard to the pertinence of the evaluation. It is anticipated that wet limestone scrubbing for SO_2 removal will become common practice, although at present (1975) there are only a few pilot plants in operation. The sample may be characterized by the following:

- Relatively low SO_2 levels (150 to 250 ppm).
- Low temperature (60° to 70°C).
- Low H_2SO_4 mist content.
- Relatively low particulate content (except for a possible carryover of limestone powder and/or slurry).
- Water content relatively low (saturated at about 50°C).

The Claus Sulfur Recovery Plant emissions before incineration may be characterized by the following:

- Moderate temperature (150°C).
- High water content (saturated at 72°C).
- High free sulfur content (condensation occurs below about 110°C).
- High H_2S and SO_2 content (0.5 and 0.25%, respectively), making the sample quite reactive.

The emissions after incineration may be characterized by the following:

- High temperature (above 550°C).
- High water content (saturated at 60°C).
- High SO_3 and/or sulfuric acid mist content, making the sample very corrosive.
- High SO_2 content (0.4%).

The evaluation, therefore, included representative and/or nearly worst-case industrial ranges of such parameters as sample temperature, pollutant concentrations, water content, particulate content (including sulfuric acid mist), troublesome condensibles content (free sulfur), and various degrees of corrosiveness associated with combinations of pollutants at various concentrations in the presence of varying amounts of moisture at different temperatures.

The Field Evaluation Work Plan was designed to determine the performance of the sampling and monitoring systems in terms of the requirements and guidelines published in two EPA documents, the relevant portions of which are reproduced in Appendix A. The documents are: EPA-650/2-74-013, *Performance Specifications for Stationary-Source Monitoring Systems for Gases and Visible Emissions,* and the Federal Register, Wednesday, September 11, 1974, Vol. 39, No. 177, Part II, *Stationary Sources, Proposed Emission*

Monitoring and Performance Testing Requirements. In addition, characterization studies of the emissions from Claus Sulfur Recovery Plants were designed to provide data on the emission levels and to address the feasibility of continuous monitoring of the process gases. The analyses provided by the various continuous monitors were compared to those obtained by standard manual EPA Compliance Test Methods to the extent that the methods were applicable. The results of this evaluation, therefore, are indicative of the applicability of the Compliance Test Methods (6 and 11) to the test sites, and of the ability of currently available commercial extractive-type sampling and monitoring systems to perform their intended function of providing a continuous record of pollutant concentrations to assist the plant operating personnel in complying with federal (or state and local) emission control requirements. While strictly applicable only to the two types of plants selected for the test (and to SO_2 and H_2O monitors), these test sites provided such a wide range of variation in the critical interface parameters that some of the results are broadly applicable to many common industrial stack gas sampling applications.

THE FOSSIL-FUEL FIRED-POWER STATION TEST SITE

The plant began operation in 1962. It is rated at 125 megawatts, burning about 1,360 metric tons per day (1,500 tons per day) of western coal, containing 0.48% sulfur. The flue gas is split and blown into twin scrubbers. Before entering the stack, the gases pass first through a flooded disc scrubber, then an absorber, and finally a reheat unit. The original purpose of the scrubbers was to reduce particulates only, since the low sulfur coal used here assured SO_2 emissions below the stated limits. Suitable raw material being available nearby, one of the scrubbers was modified in 1973 to use limestone slurry to remove SO_2 as a research and development project.

The most suitable sampling point for the evaluation was located after the two streams (limestone-scrubbed and water-scrubbed effluents) were mixed in the stack. Consequently, the evaluation was performed on about a 50/50 mixture of limestone-scrubbed and water-scrubbed sample. An ultraviolet (UV) absorption type SO_2 analyzer had been installed to monitor two extractive samples--one taken before limestone scrubbing and the second after blending the scrubbed and unscrubbed gases. The stack was breached for the evaluation test probes near the level used for the second sampling tap of the UV analyzer. It appeared possible, therefore, to correlate the evaluation test results with those of the UV analyzer. In addition, an *in-situ* type monitor was installed prior to December, 1973, at a higher level on the stack. This instrument was being leased by the test site and was being maintained on a contract basis. Further cross correlation with the *in-situ* analyzer was, therefore, possible. (Unfortunately, due to improper maintenance and/or for other reasons discussed in Section V, relatively little meaningful correlation with either site instrument was possible.)

The major sample parameters at the sampling point were as follows:

- SO_2 concentration of 100 to 250 ppm.
- Some fly ash but essentially no sulfuric acid mist.
- Saturated with water at 49°C (120°F), which is the operating temperature of the absorber.
- Sample temperature about 70°C (160°F), which is the reheater effluent temperature.

The ambient temperature at the test site was expected to vary between about -35 and +30°C (-30 to +86°F) during the months of November through January. One of the factors involved in the selection of the 13.4-meter (44-ft) level for stack penetration was the availability of space for erection of a platform to support an instrument shed adjacent to the

stack. This location of the monitors reduced the length of heat-traced sample line required to interconnect some of the sample probes and conditioning systems to the monitors. The sampling ports, conditioning systems, and instrument shed are shown in Figure 1. Figure 2 shows the basic plant and stack structures, the position of the *in situ* monitor, the position of the existing UV analyzer sampling probe (about 1.5 meters [5 ft] above which the evaluation probes were installed), and the location of the instrument shed that was erected for the evalustion test.

THE CLAUS SULFUR RECOVERY PLANT SITE

Brief Description of the Claus Process

The Claus Sulfur recovery process was developed about 1890, and significantly modified in about 1937. Briefly, it is based on the reaction of a portion of the H_2S to SO_2 by precise combusion with atmospheric oxygen to achieve near stoichemetric balance of H_2O and SO_2 for the reaction

$$2H_2S + SO_2 \xrightarrow{\text{catalyst}} aS_2 + bS_4 + \ldots\ldots$$

The plant normally involves several stages, each followed by a coalescer in which the sulfur vapor is condensed to liquid sulfur and drained to storage. The final tail gas, containing both H_2S and SO_2, is mixed with air and fuel and incinerated to oxidize the residual H_2S to SO_2 and SO_3 before discharge to the atmosphere.

Description of the Claus Plant Test Site

The plant that was available for the evaluation test was eight to nine years old. It originally exhausted to the atmosphere through a 50-meter-high (160 feet) stack with a water spray system at its base. The old stack was closed in recent years and the gas is now diverted to a much taller new stack through a long duct. The duct also carries gas from a newer Claus Plant to the new stack. A Beckman Process Gas Chromatograph

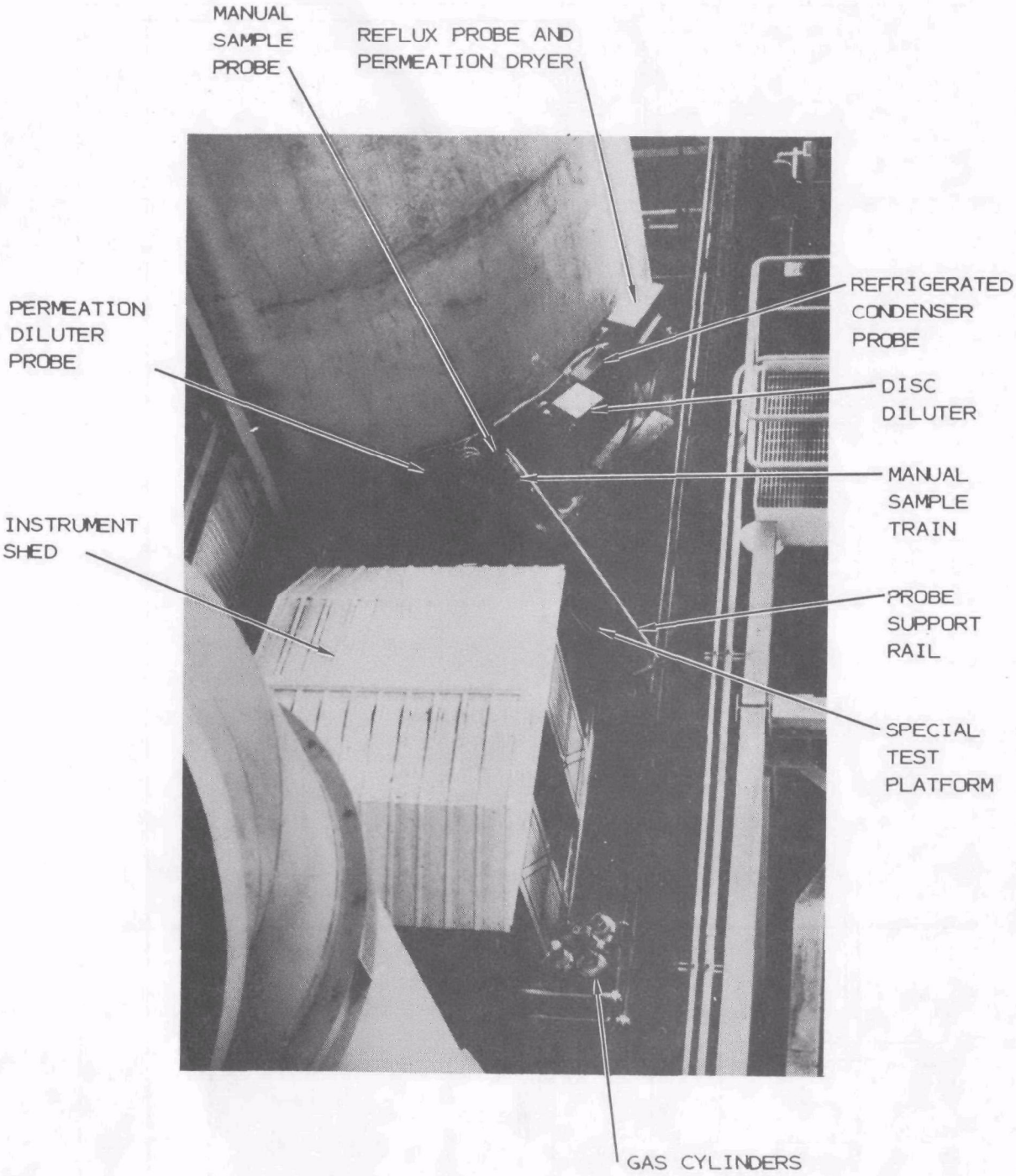

Figure 1. Power Plant Test Site

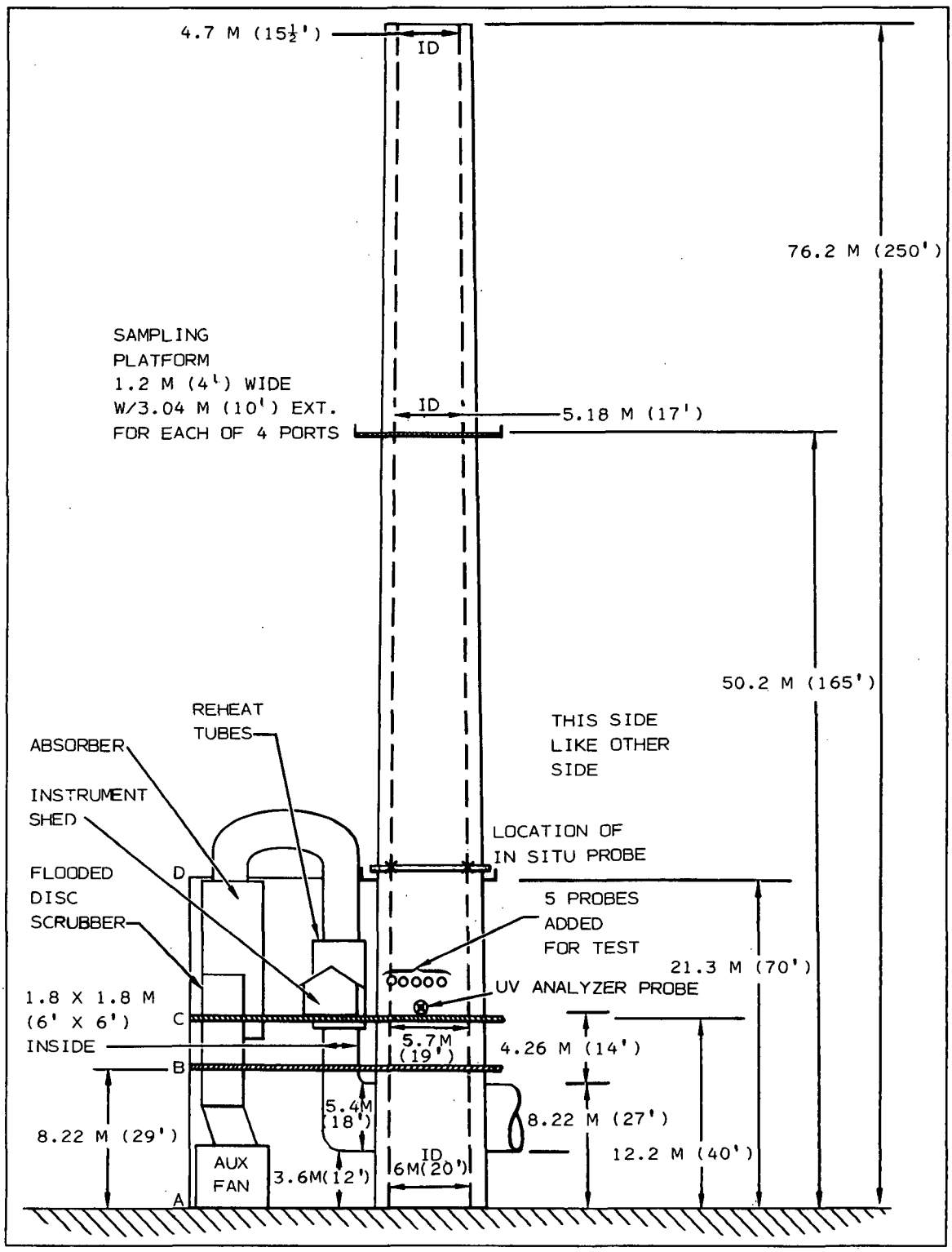

Figure 2. Power Plant Test Site, Elevation View

(PGC) monitors H_2S and SO_2 in the tail gas effluent from the sulfur coalescer to the incinerator. In addition, an ultraviolet (UV) SO_2 analyzer is used to monitor SO_2 in the effluent from the incinerator, using an extractive sampling system.

At the incinerator inlet the following normal operating conditions exist:

- The temperature is about 150°C (300°F).
- The pressure is essentially atmospheric.
- The sample gas composition is normally about as follows:

Water	37%
H_2S	0.2 to 0.5%
SO_2	0.1 to 0.25%
COS	0.05%
CS_2	0.03%
Total $S_2+S_4+S_6$	1% maximum
NH_3	Traces have been detected
N_2	Balance

At the incinerator outlet the following conditions exist:

- The temperature is 550°C (1000°F) or more
- The pressure is slightly below ambient atmosphere
- The sample composition is normally about as follows:

Water	15%
H_2S	Nil
SO_2	0.4%
N_2	71% (varies ±10% with feed gas)
O_2	11% (varies with burner operation)
CO_2	2.4%
NH_3	Traces have been detected.

Figures 3 and 4 show the basic Claus Plant structures, the location of the evaluation test sampling points, and the location of the temporary instrument shed erected for the evaluation test. Figure 5 is a photograph showing the location of the sampling probes installed on the incinerator outlet duct.

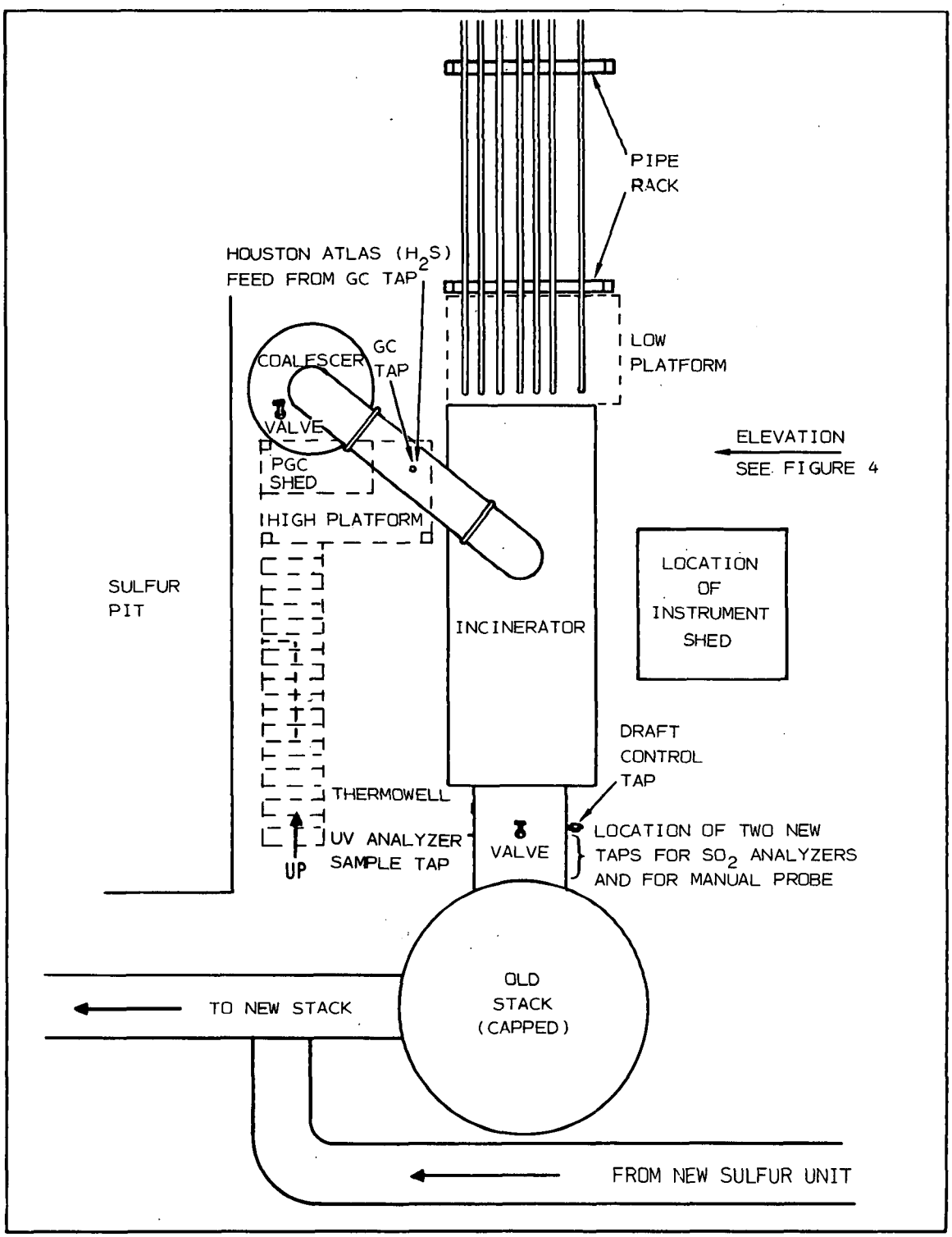

Figure 3. Claus Plant Site, Plan View

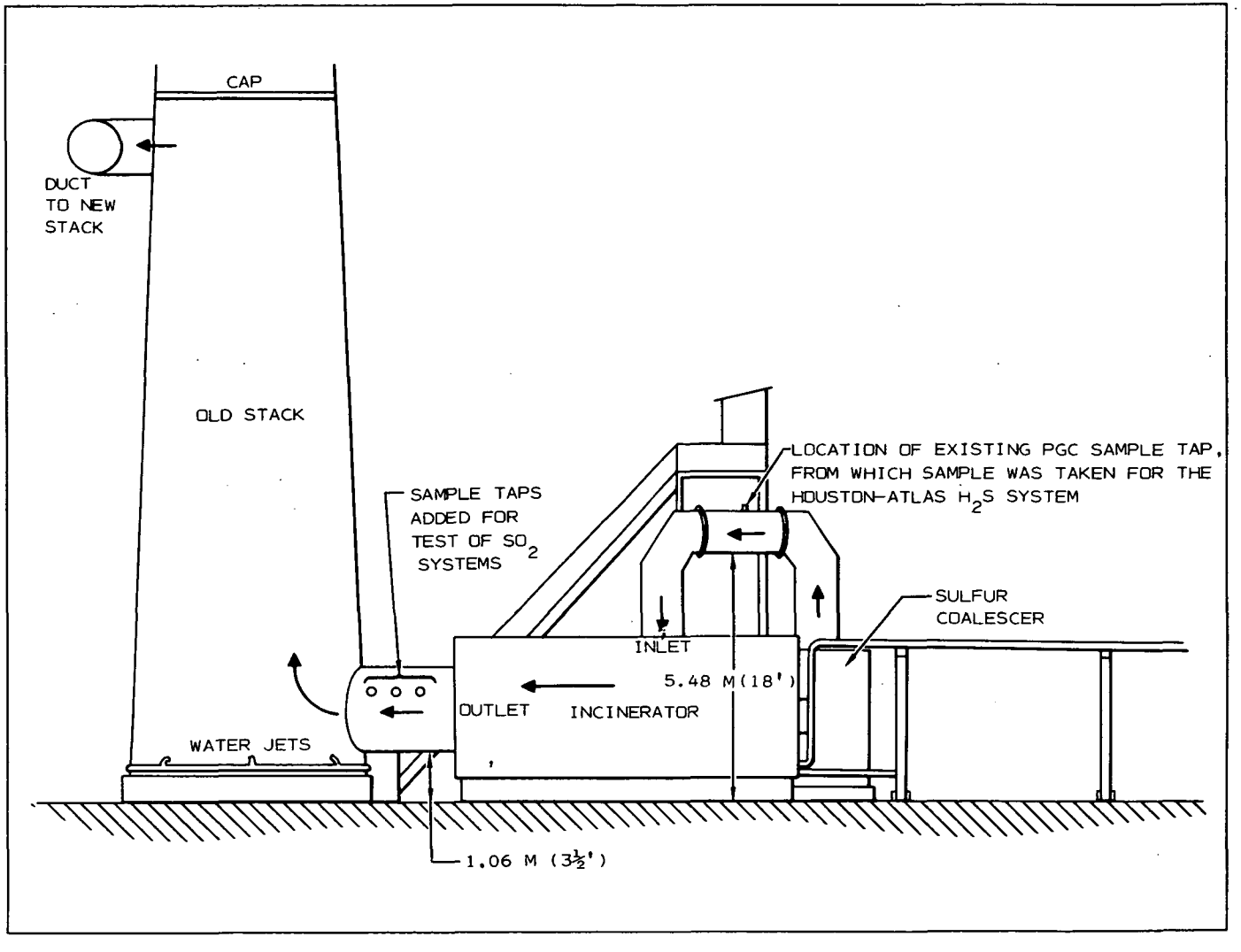

Figure 4. Claus Plant Site, Elevation View

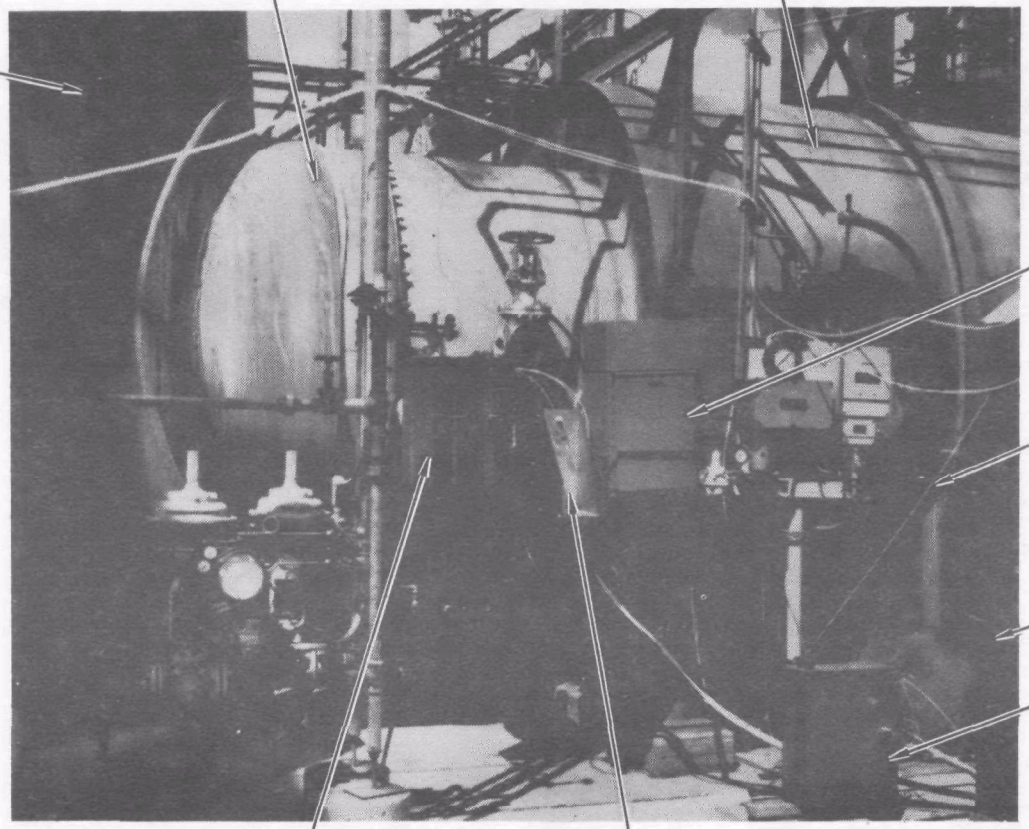

Figure 5. Claus Plant Site

BRIEF DESCRIPTION OF CONTRACT PHASES

The contract work was performed in two phases. Phase I included the following:

- Procurement of equipment as required.
- Locating suitable test sites and obtaining owner permission to perform field tests.
- Obtaining test site process and emission characterization data necessary for designing the sample interface systems and for preparation of the detailed Work Plan.
- Designing and fabricating sampling systems and peripheral equipment.
- Design, assembly, and functional testing of data handling equipment.
- Laboratory familiarization with all equipment and with EPA Compliance Test Methods 4(H_2O), 6(SO_2), and 11(H_2S).
- Preparation of Field Test Work Plan for approval by the EPA Project Officer.

The second phase consisted of field testing at the two selected sites. The Work Plans are included as Appendix B of this Final Report. The following sampling and SO_2 monitoring systems were evaluated at the Fossil-Fuel-Fired Power Plant.

- Refrigerated condensation type system with a filter on the probe inlet coupled to an electrochemical source level SO_2 analyzer.
- Permeation dilution type system with a filter on the probe inlet coupled to an ambient level flame photometric total sulfur analyzer.
- Permeation distillation drying system with a "reflux" probe coupled to a nondispersive infrared (NDIR) source level analyzer.
- Permeation dilution-type system coupled to an ambient level electrochemical SO_2 monitor (connected in series with the flame photometric analyzer).

It was originally intended that the ambient level electrochemical analyzer be used to monitor the sample delivered by the Disc Diluter, but when the Disc Diluter failed mechanically in preliminary testing, this monitor was connected to the permeation dilution system to provide redundant monitoring. (The available Disc Diluter test results are summarized in Appendix E.)

The original Work Plan called for evaluation of three systems each on the Claus Sulfur Recovery Plant emissions before and after the tail gas incinerator. Several factors such as test site constraints and program costs made it necessary to alter the Work Plan to provide for evaluation of the following systems at the Claus Plant:

- Before incinerator, monitoring was accomplished with an existing steam-cooled-free sulfur knockout assembly (used for existing PGC sampling) followed by a chilled-water-cooled sulfur and water knockout assembly, coupled to a lead acetate paper tape H_2S analyzer.
- After incinerator, a permeation dilution system with a filter on the probe inlet was coupled to an electrochemical ambient level SO_2 analyzer and a flame photometric total sulfur analyzer (in series).
- After incinerator, a permeation distillation drying system with a reflux probe was coupled to an NDIR source level SO_2 analyzer.

SECTION IV

DESCRIPTION OF SYSTEMS EVALUATED

MECHANICAL DILUTION (DISC DILUTER) AND ELECTROCHEMICAL MONITOR

The Disc Diluter was available as GFE. The original Work Plan called for evaluation at both sites and at all three sampling points, provided that it was capable of providing sustained operation with reasonable maintenance. The system is shown in some detail in Figures 6 and 7, which are reproductions of Monsanto Research Corporation illustrations. The principle of operation is adequately described in other publications, and is not given here.*

The original Work Plan was revised after repeated mechanical failure of the Disc Diluter made it impractical to attempt to continue the field evaluation. During the laboratory familiarization tests and in preliminary field testing, the Disc Diluter showed promising results when it operated correctly, but the mechanical drive train failed frequently. It became apparent that it would be impossible to make the required modifications of the mechanical drive within the scope of the contract effort. The major problems identified were as follows:

- Excessive leakage of the disc occurred when compressive loading was light enough to permit smooth operation by the drive train.
- Oscillatory drive of the disc occurred when compressive loading was adequate to reduce leakage, indicating that the drive train friction load system was oscillating in a mode similar to that of a torsion rod pendulum.

---

*Monsanto Research Corporation, Operation and Design Manual, "Construction and Field Testing of a Commercial Prototype Disc Diluter," prepared for EPA under Contract No. 68-02-0716.

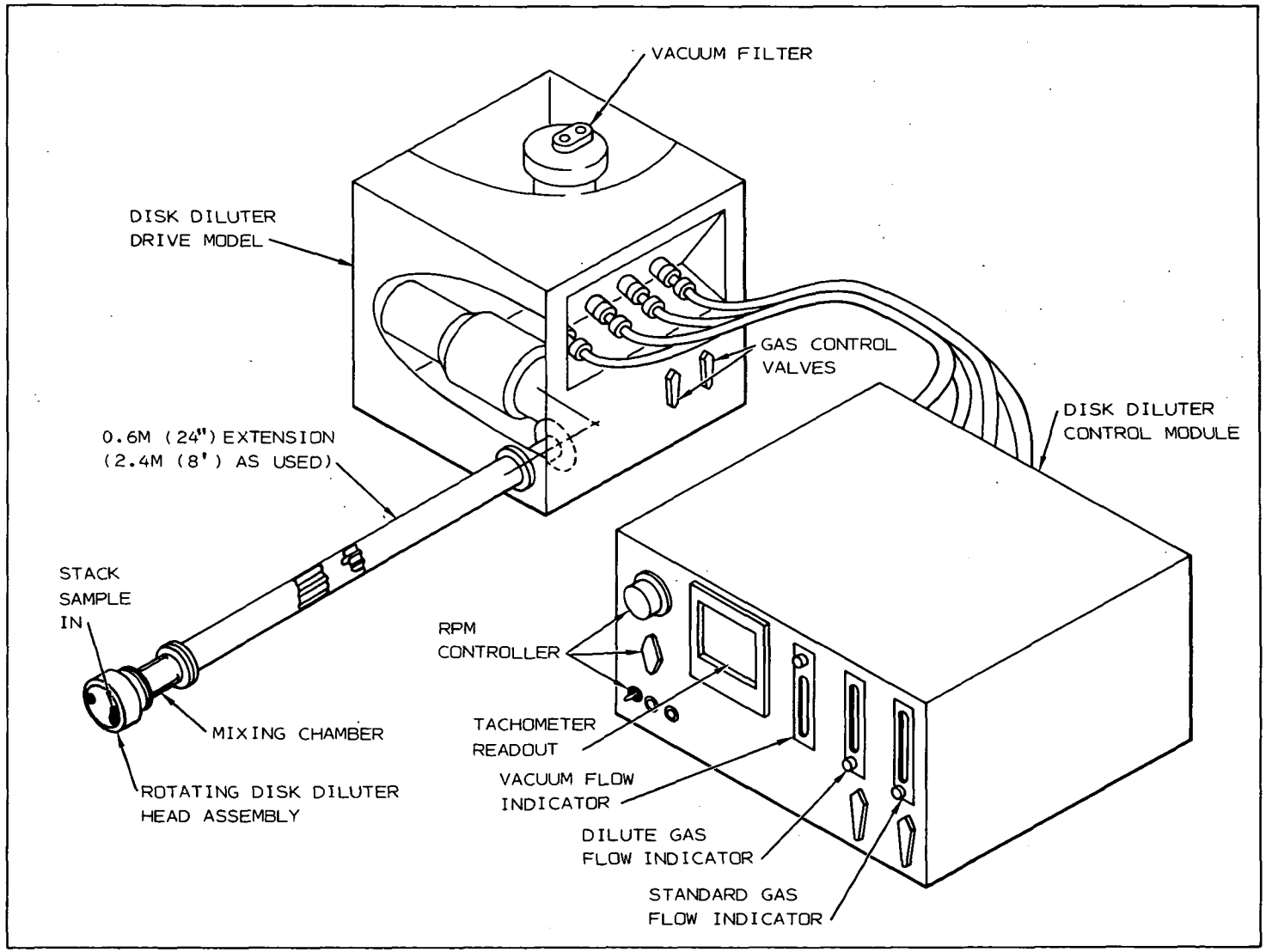

Figure 6. Disc Diluter Assembly

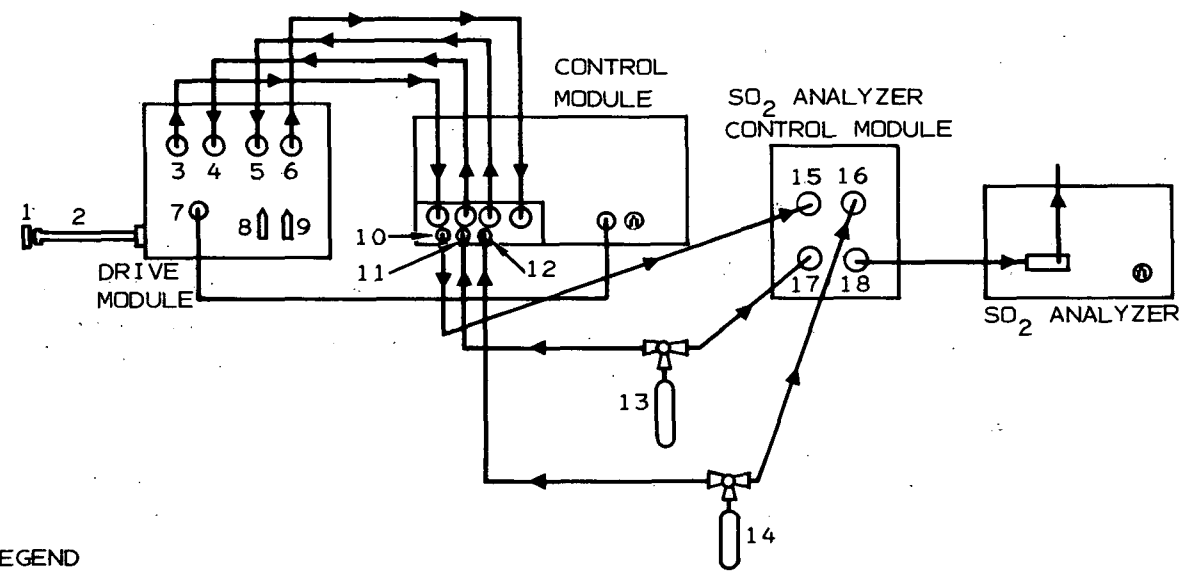

LEGEND

1 Disc diluter head assembly
2 Disc diluter extension tube
3 Vacuum line (polyethylene)
4 Diluent air line (polyethylene)
5 Calibration gas line (Teflon)
6 Diluted stack gas line (Teflon)
7 Electrical cable for drive motor
8 Vacuum on-off valve
9 Diluent air switching valve
10 Diluted stack gas outlet
11 Disc diluter calibration gas inlet
12 Diluent gas inlet
13 Calibration gas tank
14 Diluent air tank
15 Diluted stack gas inlet
16 Purge gas inlet
17 SO_2 analyzer calibration gas inlet
18 SO_2 analyzer outlet

Figure 7. Disc Diluter, Gas Flow Diagram

- The friction load and leakage varied with changing probe temperature and operating time.
- When the disc was wet with condensate, the leakage rate and friction loading were compatible with the drive train design. This suggested that deliberate water lubrication of the disc might be a useful design approach. Further, it is probable that the compressive loading was adjusted with the disc wet on some occasions, and that subsequent oscillatory drive problems were simply due to evaporative drying of the disc when the probe attained operating temperature.
- There was some evidence of disc (Delrin) galling after operating for many hours, suggesting abrasion by fly ash was occurring.

In summary, the Disc Diluter problems observed were due to details of design and construction, and were not surprising in view of the fact that the system tested was an initial breadboard design. The concept definitely appears to be worthy of further development. All test results are documented in Appendix E of this report.

In the revised Work Plan, the Dynasciences Model SS-310 SO_2 Monitor, which was to have been used with the Disc Diluter, was used with the Meloy permeation dilution system to provide redundant monitoring for the only dilution sampling system still under evaluation at the power plant site. The details of this system are given in the next paragraph.

PERMEATION DILUTION SAMPLING AND MONITORING SYSTEM

A Meloy Laboratories Inc. (Meloy) Model FSA-190-2A with a built-in permeation dilution sampling interface (Dyfusatron*), available as GFE,

---

*A registered trademark of Meloy Laboratories, Inc.

was used at both test sites. This instrument uses a flame photometric total sulfur analyzer with very high sensitivity but with linear response to only about 2 ppm total sulfur. It is, therefore, inherently an ambient-level sulfur monitor. The permeation diluter is used to reduce source level concentrations by roughly three to five orders of magnitude to match the diluted sample concentration to the basic 0-1 ppm total sulfur range of the flame photometric analyzer. The model evaluated was fabricated by Meloy under contract to the EPA. While it utilized many basic components of the commercially available Meloy flame photometer, the analyzer included revised and/or repackaged circuit boards of breadboard quality. It is believed that the many intermittent electronic failures experienced after a brief initial satisfactory laboratory evaluation were a direct result of the breadboard quality of these circuit boards.

After failure of the Disc Diluter sampling probe, the Dynasciences (now Environmental Products Division of the Whittaker Corporation) Model SS-310 Electrochemical Ambient Level SO_2 Monitor was reassigned the role of redundant monitor for the Meloy permeation diluter. The Model SS-310 consumes less than 0.1 percent of the SO_2 present in the sample at normal flow rates. It was possible, therefore, to install it between the Dyfusatron output and the Meloy flame photometric analyzer burner. This was done for all formal field evaluation testing of the Meloy System for two primary reasons: (1) it permitted maximum use of the available monitoring and data acquisition equipment, and (2) by the time the Model SS-310 became available, the Meloy flame photometric analyzer was becoming very unreliable because of several intermittent and one or more permanent electronic failures. The addition of the Model SS-310, therefore, provided a backup means of monitoring the performance of the Meloy permeation diluter independent (almost) of the operation of the Meloy flame photometric sulfur analyzer.

The complete system is illustrated in simplified schematic block diagram form in Figure 8. More complete details of the system are shown in drawing C/AE-14856 of Appendix C, particularly the details of the sampling interface enclosure and of the Meloy Analyzer Gas Flow System. Referring to Figure 8, Meloy pump No. 1 draws sample into the 5-micrometer filtered probe, through the heated sampling interface enclosure and heated sample line, through the source-sample side of the Dyfusatron, and discharges to the atmosphere. Meloy pump No. 2 draws ambient air through a charcoal cleanup trap (for removal of sulfur compounds and hydrocarbons) to provide carrier air for the diluted-sample side of the Dyfusatron. The carrier air then passes through the backup monitor (Dynasciences Model SS-310), through the hydrogen flame burner, and to exhaust. A fixed-orifice air inlet near the inlet of each pump allows the pumps to operate near volumetric capacity, reducing the negative pressure that can be applied to the Dyfusatron membrane if the intakes are blocked. The details of the flow controls and monitors are omitted from Figure 8 for clarity of explanation of the basic functioning of the system.

The sampling interface enclosure contains valves, flowmeters, heaters, air-pressure regulators, etc., as necessary to accomplish the following functions:

- Selection of sample, zero, or span gases by remote command of solenoid valves.
- Probe cleaning by blowback air during zero gas portion of calibration cycle.
- Automatic sample shutoff in case of failure of either electrical power or instrument air pressure (shutoff accomplished by use of a pneumatically operated, spring-closed valve in the sample line).
- Temperature control above sample dewpoint by heated-air-bath technique.

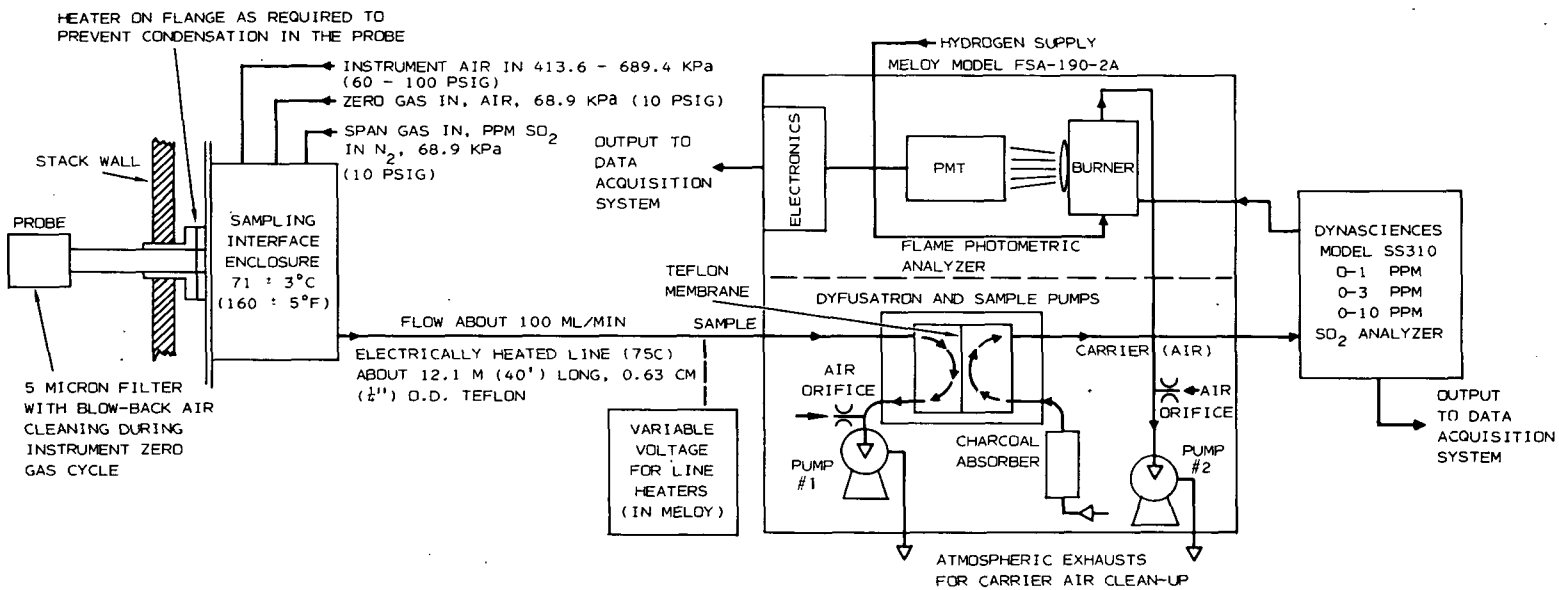

Figure 8. Permeation Diluter System

- Provisions for delivering zero and span gases to the sample line at essentially stack pressure.

As shown in Figure 8, it was also necessary to heat the flange that mounted the interface enclosure to the stack (or duct) to prevent condensation of water in the probe. This was not necessary for similar interfaces using about 10-liter-per-minute sample flow rates, but the low sample rate tolerated by the Meloy System (about 100 milliliters per minute) did not provide adequate flange heating due to the flow of warm sample.

The sample line was electrically heated by a variac built into the Meloy analyzer. This line was 0.63 cm (1/4 in.) OD Teflon surrounded by the electrical heater wire, thermal insulation, and an external jacket. The sample moisture was not allowed to condense at any point in the system unless, perhaps, it condensed just ahead of the excess air inlet orifice where the temperature was decreased to a few degrees above ambient. Dilution by ambient air at this point lowered the dewpoint to below ambient, precluding condensation in pump No. 1.

The carrier air serves as the combustion air for the burner of the Meloy analyzer. The burner is operated with a controlled flow rate of hydrogen and a selectable (within limits) flow rate of carrier air, using the forced draft (suction) of pump No. 2 to bring in the carrier air and to remove the products of combustion. The operating characteristics are such that the carrier air flow rate is about 35% higher with the flame out than it is with the flame on. The flame photometric principle is such that the output signal is semi-proportional to the number of sulfur atoms entering the burner per unit time over a fairly broad range of carrier flow rates (for fixed H_2 flow rate). The permeation dilution technique provides a constant rate of input of sulfur atom containing molecules (of a given molecular species such as SO_2) for a fixed partial

pressure of sulfur compound on the source-sample side almost independent of carrier flow rate. Consequently, the SO_2 (for example) concentration (actually, partial pressure) in the carrier gas is proportional to the carrier flow rate, but the Meloy output is only slightly dependent upon carrier flow rate when set at the optimum flow rate. The output *versus* carrier flow rate curve of Figure 9 illustrates this characteristic of the Meloy analyzer output.

The Dynasciences Model SS-310 Electrochemical SO_2 Monitor responds to sample partial pressure of SO_2 (P_{SO_2}). In view of the above discussion, the Model SS-310 output was inversely proportional to the Meloy carrier gas flow rate when sampling in the manner indicated in Figure 8. The use of the Model SS-310 as a backup monitor for the Meloy Dyfusatron output was complicated by this effect whenever the flame of the Meloy analyzer went out--causing a large increase of carrier flow rate. Otherwise, the carrier flow rate was sufficiently stable to make the Model SS-310 and Dyfusatron a stable system. Furthermore, the known change in carrier flow rate for flame-on to flame-out conditions and the simple dependence upon flow made it possible to make rough corrections of the Model SS-310 output for changes in carrier flow rate.

The output of the Dyfusatron is a sample with sulfur-containing molecule partial pressure proportional to that of the wet sample before dilution. This is a consequence of maintaining high temperature throughout the sampling system, which makes the partial pressure of water (P_{H_2O}) of the sample in the Dyfusatron equal to that at the probe inlet. Since there is negligible drop in the sample total pressure from probe to Dyfusatron and the sum of all partial pressures is constant (ambient atmosphere ±25 cm of water), the presence of water vapor pressure reduces all other partial pressures proportionately. This dilution effect may be compensated for by dividing the wet basis output of the analyzers by the quantity ($1-FH_2O$), where FH_2O is the mole fraction of water in the sample. This

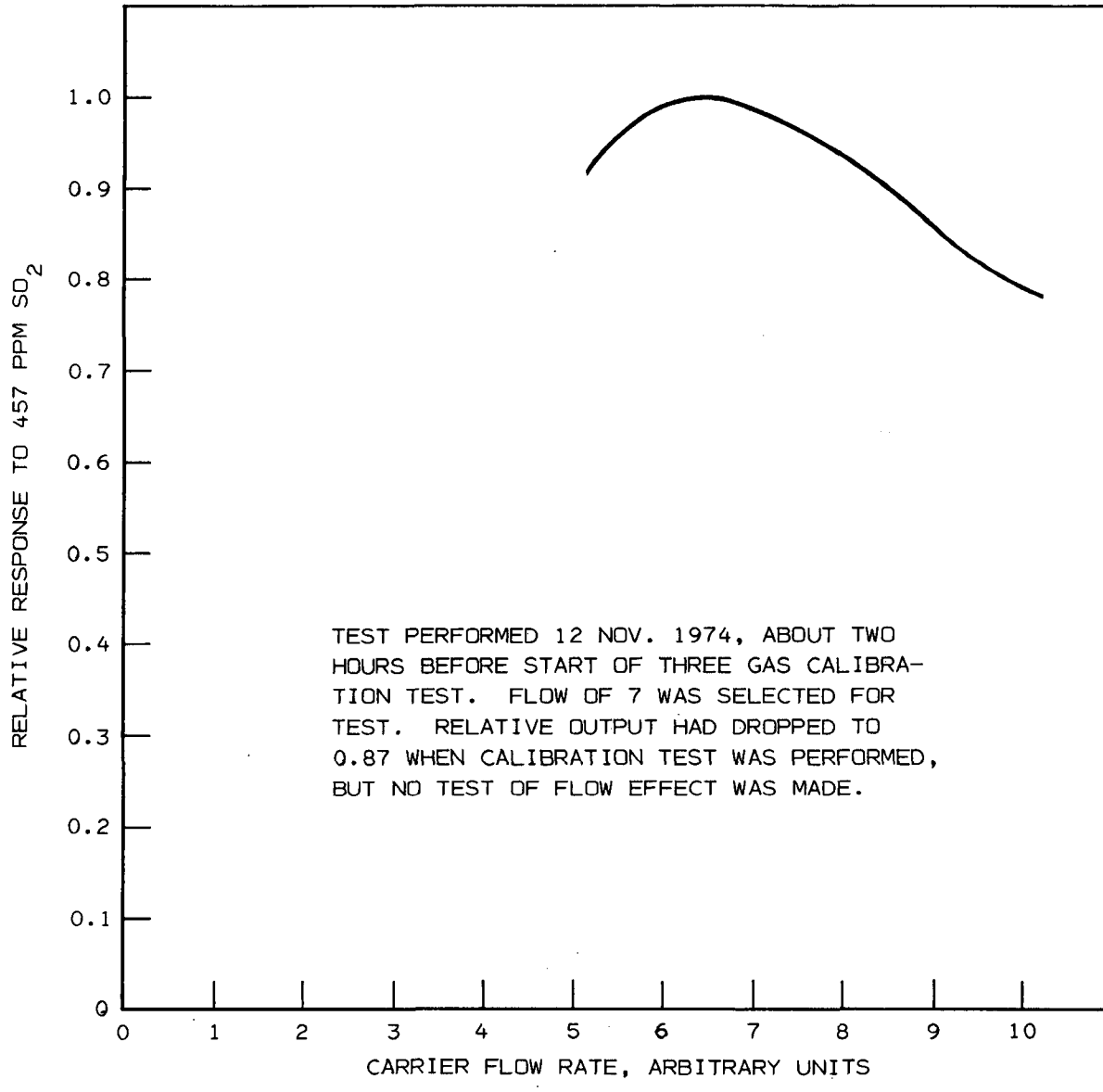

Figure 9. Meloy Model FSA-190-2A Dependence upon Carrier Flow Rate

discussion assumes that the analyzers are calibrated on dry gases, which was the case for all results reported. This correction, then, is necessary before comparison to the results obtained with the standard EPA Compliance Test Methods, which are reported on a dry basis. It was necessary, therefore, to employ Compliance Test Method 4 to determine the mean water vapor content of the sample for use in correcting the outputs of the Meloy and the Dynasciences Model SS-310 to a dry sample basis for comparison to the correlation test data from the Compliance Test Methods.

REFRIGERATION DRYING AND ELECTROCHEMICAL SO_2 MONITOR

This system was tested at the power plant site only. It represented the most conventional system in the group evaluated. The system is shown in simplified schematic block diagram form in Figure 10 and in detail in drawing B/AE-14866 of Appendix C.

The probe filter was 20 micrometers to permit 10-liter-per-minute sampling with a reasonable pressure drop. The sampling interface enclosure was basically identical to that used with the Meloy System described in detail in the last paragraph, except for the inclusion of a second filter element to remove particles down to about 1-micrometer size. The heat-traced sample line was also of the same type but with a 0.95 cm (3/8 in.) OD Teflon tube to accommodate a higher sample flow rate. The line temperature was controlled with a second variac located in the Meloy System.

Referring to Figure 10, the sample is drawn through the inlet filter, probe, sample interface enclosure, and heated line by the sample pump. The sample pump discharges through a short unheated line into the refrigerated condensor. Condensate is removed by a polyvinyl chloride (PVC) trap, equipped with a float valve for automatic dumping of condensate to the drain. The dried sample (dewpoint of about 1°C) then passes to a 68.9 kPa (10 psig) relief valve and to the analyzer flow control valve connected in parallel. Most of the sample normally vents to atmosphere

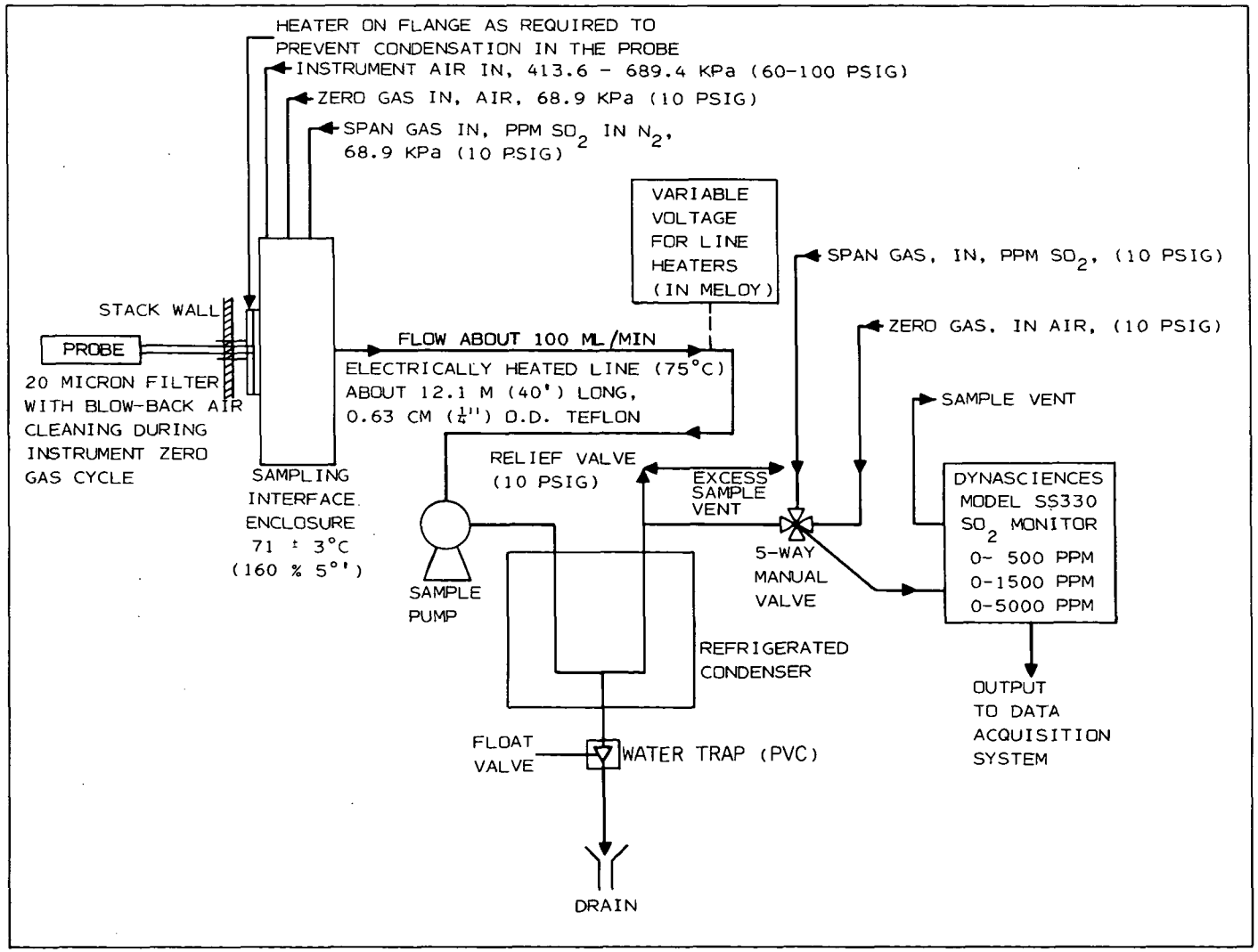

Figure 10. Refrigerated Condensor System

through the relief valve. The balance of the sample passes through a 5-way manual valve to the Dynasciences Model SS-330. The 5-way valve permits manual introduction of zero and span gases downstream of the refrigerated condensor if and when desired. This feature is of considerable advantage in terms of troubleshooting and in determining the response delay due to the components in the sampling interface housing, heated lines, refrigerated condensor, and water trap.

The output of the Dynasciences monitor is on a dry basis, the sample having nearly the same residual water content as that left by the ice bath used on the sample train of the Compliance Test Methods. With no correction for the water content difference, the output should be within less than 1/2% of the Compliance Test Method determination.

REFLUX PROBE, PERMEATION DRYING, AND INFRARED SO_2 MONITOR

This system was tested at both the power plant and at the Claus Sulfur Recovery Plant (after incineration). Both the reflux probe and the permeation distillation dryer are relatively new developments. Briefly, the reflux probe withdraws, filters, and returns (refluxes) most of the sample to the stack through the inner of two essentially concentric tubes of different length. The relatively high velocity of the reflux gas discharged inside of the larger diameter outer probe produces an axial discharge of high velocity, causing a flow disturbance of sample passing by the end of the probe. The net effect is to cause the high velocity stack gas stream lines to deflect around the probe tip, which carries particulates away from the probe inlet. The gas drawn into the outer probe is from the relatively low velocity vortex created by the reflux flow, and is relatively free of particulates. A small percentage of the sample passes on the analyzer, the majority being discharged through the reflux (inner) probe.

The system is illutrated in Figure 11, which is greatly simplified to facilitate discussion. More complete details are given in drawing B/AE-115010 of Appendix C.

Figure 12 is a photograph of the reflux probe interface housing with the door open, showing some of the components contained within the heated zone of the housing.

Figure 11 also illustrates the operation of the permeation dryer. That part of the sample which is not refluxed passes through a backup filter, a differential pressure flow controller, through the permeation dryer (a bundle of small Permapure* plastic tubes), and out through the sample line to the monitor. The space surrounding the dryer tubes is purged by relatively dry air (counterflow). Because the tubes are very permeable to moisture, the sample leaving the dryer can be almost as dry as the purge gas entering it. The residual sample water also depends upon the ratio of purge gas to sample gas flow rates--normally 2 to 1 or greater. The use of a differential pressure-actuated flow controller, as indicated in Figure 11, protects the dryer tubes from excessive internal-to-external pressure differences.

The complete system evaluated is shown in simplified block diagram form in Figure 13. More complete details of the entire system are in drawing B/AE-115010 of Appendix C. Referring to Figure 12, the permeation drier sample flows through an unheated 0.63 cm (1/4 in.) OD Teflon tube to the Instrument Shed. Near the instrument the sample line passes through a solenoid valve that is closed by the action of a pressure switch in the instrument air line. This feature protects the analyzer and permeation dryer from moisture which would accumulate if the purge air failed in the

---

*Manufactured by Permapure Products, Inc., P.O. Box 70, Oceanport, N.J., 07757

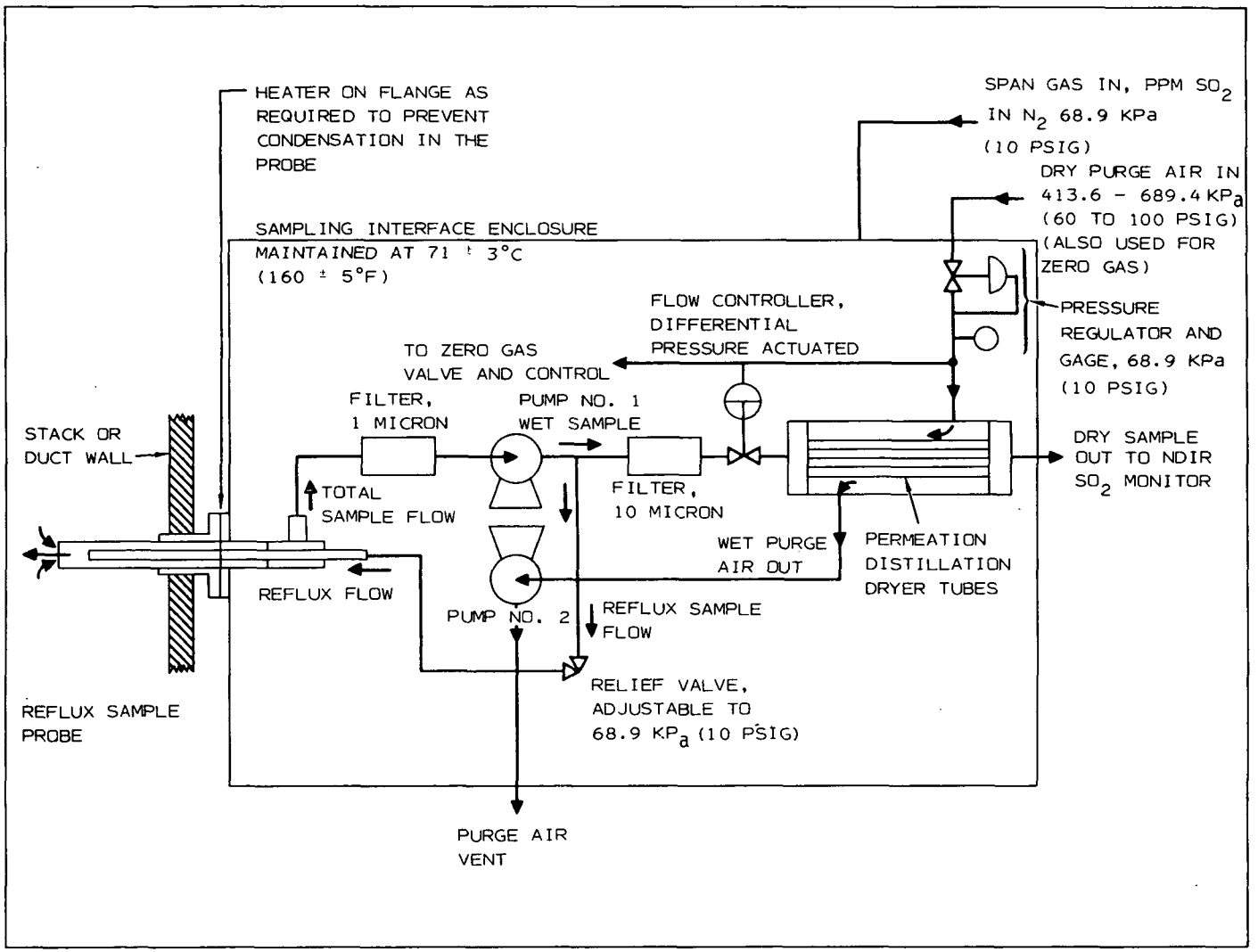

Figure 11. Reflux Probe and Permeation Dryer Flow Diagram

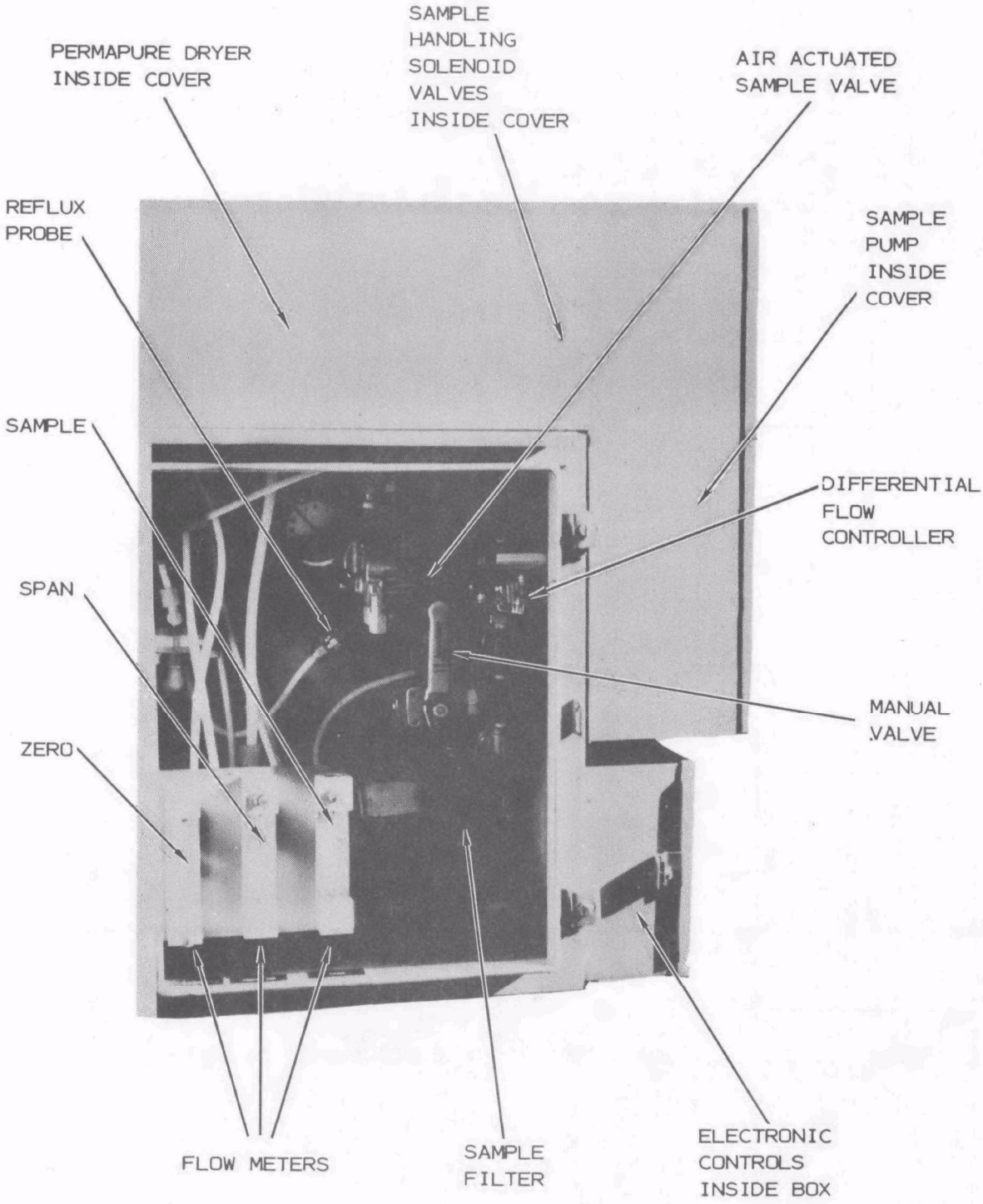

Figure 12. Reflux Probe and Permeation Dryer Sampling Interface Enclosure

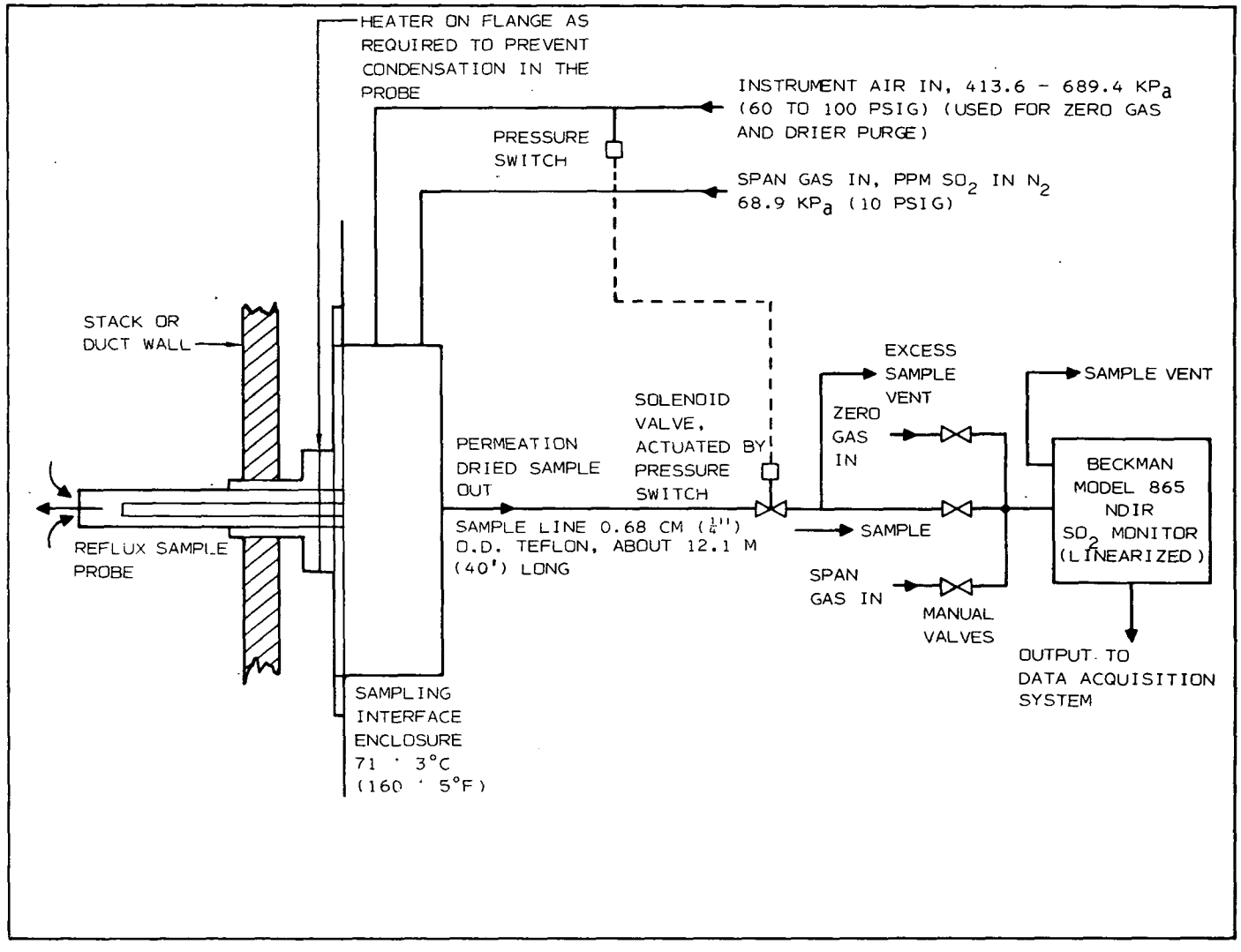

Figure 13. Reflux Probe, Permeation Dryer, and NDIR System

event air pressure is lost. A major portion of the sample is bypassed to vent, while the balance passes through a manual valve manifold to a Beckman Model 865 Nondispersive Infrared (NDIR) SO_2 Monitor with linearized output. The manual valves permit introduction of zero, span, or sample gas to the analyzer, independent of the sample interface enclosure, permeation dryer, and sample lines. This feature is very convenient when troubleshooting the sampling system monitor.

The output of the Beckman System is on a dry sample basis. The error in reported data (about 0.5% water) due to neglecting the difference in water content of Method 6 samples and the sample delivered by this system (about 0.1% water or less) is less than 1/2 percent.

H_2S MONITORING AT CLAUS PLANT (BEFORE INCINERATOR)

In the revised work plan, this was the only system to be evaluated for H_2S monitoring ahead of the Claus Plant tail gas incinerator. Advantage was taken of an existing sampling system being used with a Beckman process gas chromatograph for monitoring the H_2S and SO_2 ahead of the incinerator. Referring to Figure 14, the sample for the evaluation test was taken after the existing steam temperature controlled sulfur knockout pot (coalescer). The sample line was maintained at 121°C (250°F) up to a chilled-water-cooled sulfur and water knockout pot, which was designed on this contract. The refrigerated condensor used at the power plant for sample drying was used in a circulating loop for chilling the water, as shown in Figure 14. Details of the chilled-water-cooled sulfur and water knowkout pot design are shown in drawing C/AE-14874, Appendix C. It was manually cleaned periodically by heating with steam, which melted the accumulated sulfur and carried it out the drain.

After leaving the water-cooled sulfur knockout pot, the sample passed through unheated Teflon lines, through a filter, the sample pump, and on to a solenoid valve manifold used for zero, span, or sample selection

(see Figure 14). As in the other systems, the sample control valve was a pneumatically operated, spring-closed valve to provide sample shutoff if either power or instrument air failed. (More complete details of the system described thus far are shown in drawing B/AE-14774 of Appendix C.) The sample then passed through another filter to the Houston Atlas, Inc., (HA) Dilution and Monitoring System.

The Houston Atlas, Inc., lead acetate paper tape sulfur monitor is inherently capable of analyzing samples containing up to about 40 ppm of H_2S. For applications to higher concentrations, HA provides a dilution system very similar in concept to that of the EPA-developed Disc Diluter. Briefly, a GC-type slide valve is pneumatically operated by a solenoid valve driven by a clock motor-cam-microswitch timer to inject fixed volumes of sample at a fixed repetition rate into a carrier gas (instrument air with absorber to remove sulfur components). The carrier gas (diluted sample) passes through a mixing chamber to a standard Houston Atlas lead acetate paper-tape sulfur analyzer. The dilution factor is controlled by sizing the volume of the slide valve (sample injector), and by changing the number of lobes on the cam and/or the clock-motor speed to control the rate of injection of fixed volumes of sample into the carrier gas.

The HA lead acetate paper-tape analyzer is based upon the reaction of H_2S (and other reduced sulfur compounds) with lead acetate (white) to form lead sulfide (black). The analyzer actually measures the rate of change of tape optical reflectance with time, which is proportional to the rate of formation of lead sulfide. When sampling directly, the output is proportional to both sulfide concentration and to sample flow rate. However, when coupled to the HA diluter it was found that carrier and sample flow rate changes had only transient effects on the analyzer output. This is consistent with the observation that the lead acetate tape removes all H_2S from the sample, which means that, within limits, the steady-state

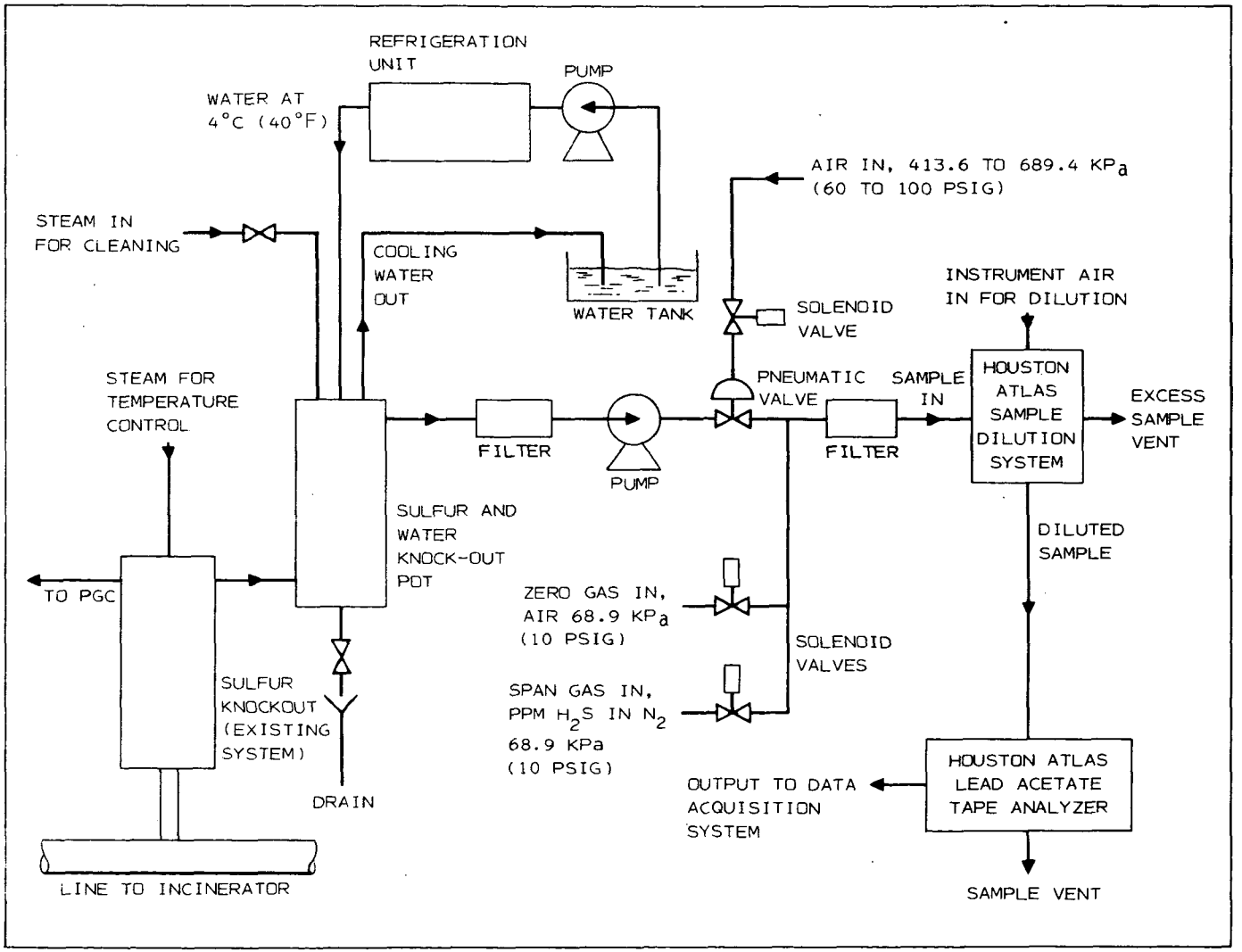

Figure 14. Claus Plant H_2S Sampling--Interface System

output should depend only on raw sample H_2S concentration and on the diluter slide valve volume and repetition rate. Consequently, it is only important that the sample flow rate be high enough to purge the slide valve injection volume between cycles, and that the carrier gas flow be stable and within the rate acceptable by the tape sampler.

The output of the HA System as tested was essentially on a dry basis--there being little more residual moisture in the sample leaving the chilled-water knockout pot (4°C) than there is from the ice bath used in the Compliance Test Method sampling train. Compliance Test Method 11 was not applicable to the concentration of H_2S present in the Claus Plant tail gas. Consequently, the evaluation test results could be compared only to the PGC analysis, and the vendor analysis of the span gas was the sole basis for calibration of the HA analyzer. The span gas was dry and the sample contained about 0.8% water (saturated at 4°C), meaning that the error due to neglecting the sample residual water was less than 1%.

DATA ACQUISITION SYSTEM

All monitors under evaluation provided analog outputs of 0-100 millivolts, or were easily modified for 0-100 millivolt output. Texas Instruments, Inc., strip chart recorders were available (contractor-furnished) for continuous monitoring and recording of four data channels. An Easterline-Angus (E-A) Model D-2020 Data Logger with 20 channels was available (GFE) for providing analog-to-digital conversion (ADC). A teletype (TTY) for both printout and punched paper-tape data storage was also available (GFE) for interconnection to the E-A Data Logger. Consequently, the work plan called for data acquisition by analog strip chart recorders, TTY printout, and on punched paper tape (by TTY punch). The system was redundant in the sense that the required data reduction could be accomplished from either analog or digital data (or both).

The data acquisition system and the systems evaluated at the power plant are shown in block diagram form in Figure 15. It was possible to calibrate all systems for 0-500 ppm (referred to the sample before dilution) except the Meloy--which has no provision for adjustment of either zero or span by the operator. Each of the monitor outputs (except the Dynasciences Model SS-310) was connected to a strip chart recorder input, to an input channel of the E-A Data Logger (20 channels available), and to an input of an automatic zero-cal module. The Model SS-310 was not connected to the auto zero-cal unit because it was originally intended that it be used with the Disc Diluter probe (dashed line in Figure 15) which was not to be automatically zero and span adjusted. When the Disc Diluter failed and the Model SS-310 was moved to the Meloy Sampling System (solid lines of Figure 15) it was not connected for auto zero-cal because of field test time constraints. The three active auto zero-cal module outputs were connected to three more channels of the E-A Data Logger to provide digital output of both raw and auto zero-cal standized monitor outputs. The E-A Data Logger provided a digital display of any channel selected, TTY printout of any or all channels when desired, plus a TTY-generated punched paper tape for all data output by the E-A unit. This data acquisition scheme had the following advantages:

- Direct analog recording of all raw monitor outputs, independent of the operation of the digital acquisition system and of the auto zero-cal modules.
- Acquisition of a punched-tape record permitting introduction of data into a digital computer for more sophisticated data reduction, if desired, and/or generation of duplicate TTY printout of digital data to facilitate manual data reduction.
- Extra E-A data logging channels were available for monitoring temperatures, system mode identification signals, etc.

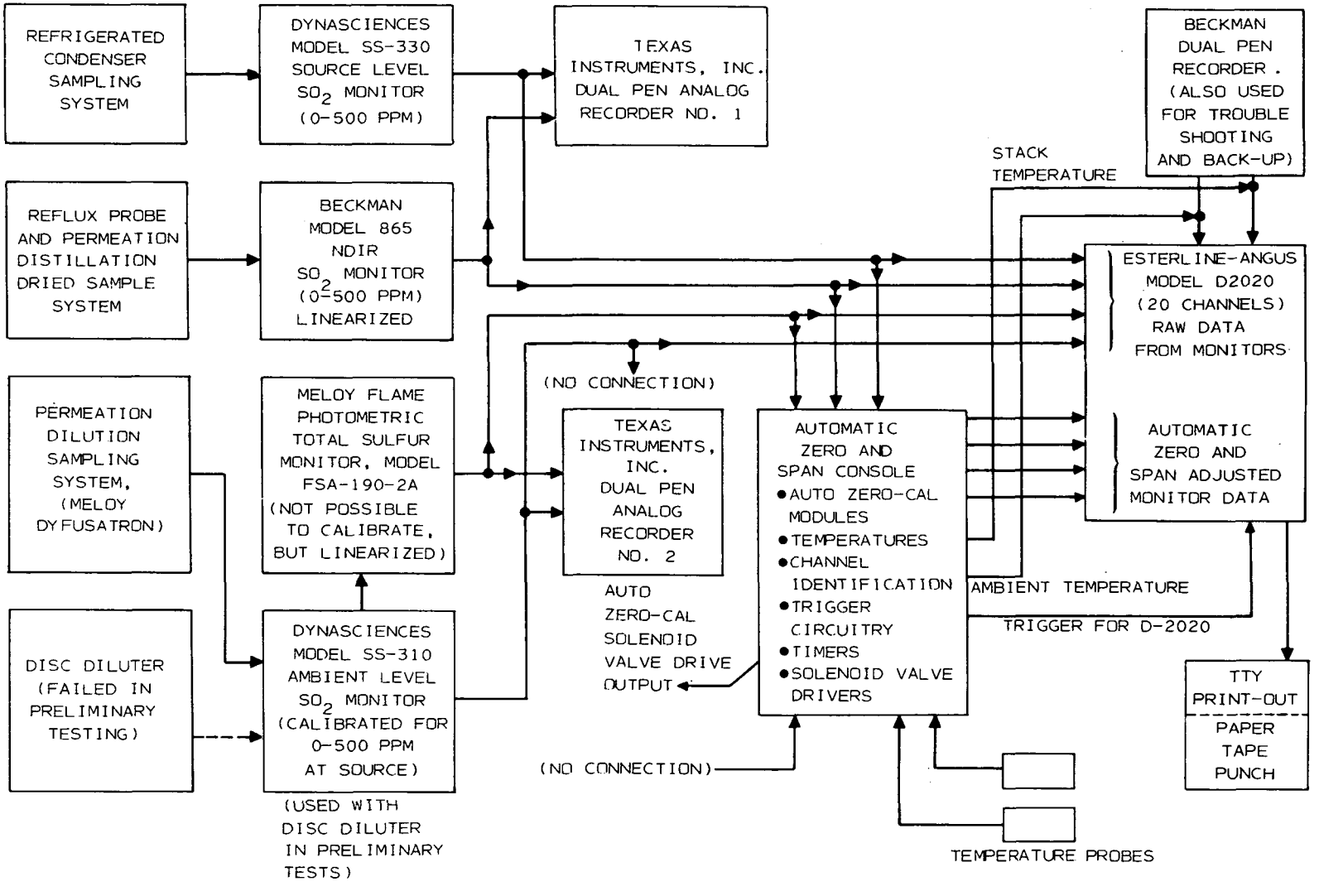

Figure 15. Power Plant Test Site Data Acquisition System

The auto zero-cal console contained four auto zero-cal modules (one spare) plus all peripheral circuitry. The peripheral equipment included the following:

- Signal conditioning for two temperature probes that monitored stack gas and ambient temperatures.
- Mode identification output to the E-A Data Logger, i.e., a voltage indicating zero, span, or sample status of solenoid valves (on one channel) and a voltage indicating manual, two-hour or twenty-four-hour cycle status of a manual calibration mode selector switch on another channel.
- Two clock motors for control of auto zero-cal standardization in either two-hour or twenty-four-hour mode, plus triggering of the E-A Data Logger for data acquisition at desired intervals when in either automatic mode.
- Solid-state relays for solenoid valve operation upon command from either the auto zero-cal module, or from a manual zero, span, sample selector switch when in the manual operating mode.
- Line to twenty-four-volt transformers for solenoid valve operation.
- Dc power supplies for all circuitry contained in the automatic zero-cal console.

The original Work Plan utilized all of the data acquisition capability described above. However, failures of both timer motors and of one type of digital component of the auto zero-cal modules during preliminary tests at the power plant site made it impossible to operate the system in either the two-hour or twenty-four-hour automatic modes during the formal evaluation test at the power plant site. Accordingly, two-hour and twenty-four-hour standardizations were performed manually using the manual mode of the automatic zero-calibration console at both test sites. Automatic digital data acquisition was accomplished when desired with the built-in, timed, trigger capability of the E-A Data Logger.

The systems evaluated at the Claus Plant site are essentially illustrated in Figure 15. The only change is the substitution of the Houston Atlas, Inc., diluter and lead acetate sampler for the refrigerated condensor--Dynasciences Model SS-330 system shown in Figure 15.

SECTION V

FIELD TEST RESULTS

BRIEF OUTLINE OF WORK PLAN OBJECTIVES

The Field Evaluation Work Plan was designed to determine the performance of the sampling and monitoring systems in terms of the requirements and guidelines published in two EPA documents, the relevant portions of which are reproduced in Appendix A for convenience of reference. The documents are EPA-650/2-74-013, *Performance Specifications for Stationary Source Monitoring Systems for Gases and Visible Emissions,* and the Federal Register, Wednesday, September 11, 1974, Vol. 39, No. 177, Part II, *Stationary Sources, Proposed Emission Monitoring and Performance Testing Requirements.* The analyses provided by the various continuous monitors were compared to those obtained by standard, manual EPA Compliance Test Methods to the extent that those methods were applicable. The tests required by EPA-650/2-74-013 are more comprehensive than those specifically required by the subject contract. In the interests of obtaining the maximum useful information from the funds required for field testing, the Field Evaluation Work Plan included all eight of the following desirable tests from EPA-650/2-74-013.

1. Calibration Error: determined by repetitive cycling between three known standard gases (except that only two gases were used for one system, as allowed by the Federal Register, Sept. 11, 1974).
2. Relative Accuracy: obtained by comparison to Compliance Test Method results (where applicable).
3. Two-hour zero drift.
4. Twenty-four-hour zero drift.
5. Two-hour calibration (or "span") drift.
6. Twenty-four-hour calibration drift.

7. Response time.
8. Operational period.

In the original Work Plan the Disc Diluter with Dynasciences Model SS-310 Monitor was to participate in tests 1, 2, and 7 only, because this system was not to be included in the automatic calibration scheme. Test 1 was performed at the Beckman facility in Anaheim, California, before moving to the test sites, in accordance with the original plan. After failure of the Disc Diluter and of the automatic mode timers in preliminary tests at the power plant, the Test Plan was revised to include tests 2 through 7 for all monitors, including the Model SS-310 which was then connected to the Meloy Permeation Dilution Sampling System.

All reasonable effort (within contract scope and funding) was made to obtain optimum performance from all systems in the field installation and preliminary testing stage, and to maintain all systems throughout the formal testing. In accordance with the procedures of EPA-650/2-74-013, it was necessary to restrict the frequency of adjustment of the systems while performing drift and accuracy tests. Such details are given in the abridged Work Plan of Appendix B.

COMMENT ON ERROR CALCULATION

In reviewing all data prior to issuance of this report, a possible ambiguity in interpretation of the guidelines given on pages 56-60 of EPA 650/2-74-013 (Appendix A of this report) was discovered. All of the calculations had been made using the sum of the mean of the absolute values and the 95% confidence interval. The referenced guidelines actually require reporting of the sum of the absolute value of the mean and the 95% confidence interval. The method employed in calculating the results reported here results in a larger absolute value of the mean error, but a smaller confidence interval. Sample calculations were made to establish the impact of calculating the other way upon the reported results.

In all cases examined the significance of the results would not be altered, and in many cases (wherever all deviations were of the same sign) there is no difference at all. In the interest of consistency, therefore, all results reported were calculated using the sum of the mean of the absolute values of the deviations and the 95% confidence interval. Appendix F provides some examples of the difference of reported errors that would occur if the other interpretation had been used.

RESULTS OF TESTING AT FOSSIL-FUEL-FIRED POWER PLANT

Calibration Error (Before Field Installation)

This test was performed in accordance with the original Work Plan for the power plant given in Appendix B. The test gases were introduced through the span gas valves which were mounted in the sampling interface housings (except for the Disc Diluter System). Introduction of gases through the sample probes would have entailed excessive consumption of test gases since two of the four systems were designed to operate on about 10 liters/minute of sample, and additional flow would have been required to flood the probes with gas. Introduction of gases at this point included all of the systems except the stack probe, and leakage of critical valves would have influenced the results. The test, therefore, adequately demonstrated system performance to the extent practical in the laboratory. In the case of the Disc Diluter, the test gases were also introduced through the span gas inlet, with the disc rotating in the reversed mode as it would be for an *in situ* calibration. The primary difference between the laboratory test and a field test was, therefore, the operating temperature of the Disc Diluter probe.

The results of this test are summarized in Table 3. This test was performed at the conclusion of the laboratory familiarization phase just prior to transport and field installation at the power plant test site.

Table 3. CALIBRATION ERROR OF SYSTEMS EVALUATED AT POWER PLANT. Test was performed in the laboratory immediately before transport to and installation at the power plant test site.

Test Gas	Percent of Error* Calculated for Each System			
	Refrigerated Condensor and Dynasciences Model SS-330	Beckman Reflux Probe, Permeation Dryer, and Model 865 NDIR	Disc Diluter and Dynasciences Model SS-310	Permeation Diluter and Flame Photometric (Meloy)
157 ppm SO_2 in N_2	3.1	4.5	4.5	4.0
309 ppm SO_2 in N_2	1.5	0.6	4.4	4.4
458 ppm SO_2 in N_2	2.4	0.6	2.7	2.1

*Errors reported are the sum of the mean of the absolute values and the 95% confidence interval (computed the same way), expressed as a percentage of the known test gas SO_2 concentration. Some of these errors would change, but insignificantly, if computed using the absolute value of the mean of the deviations.

Since the percent of error requirement of EPA 650/2-74-013 for this test is 5% or less, it is concluded that all four systems (including the Disc Diluter with Model SS-310) passed this test.

Relative Accuracy

Thirty-two valid data sets for the determination of relative accuracy, as defined in EPA-650/2-74-013, were obtained at the power plant site. These data sets were divided chronologically into four groups of nine sets each. The last set of data in each group of nine sets is the first set of the next group, in accordance with the test procedure published in the Federal Register.

The results of relative accuracy tests, reported on a dry-basis, with 95% confidence interval included, are summarized in Table 4. All four systems were within the accuracy requirements of EPA 650/2-74-013 (20% or less) for all four data sets. The available preliminary results obtained with the Disc Diluter are given in Appendix E.

Two-Hour Zero and Calibration Drift

Two sets of data allowing determination of two-hour zero and calibration drifts were obtained in the power plant test site. The results are expressed as percent of the emission standard, as required by the published EPA procedures. The current emission standard is 0.54 kilograms (1.2 pounds) SO_2/2.3 x 10^{-9} joules (million BTU) which may be shown to be equivalent to about 450 ppn SO_2 using the following equation and assumptions:

Table 4. RELATIVE ACCURACY OF SYSTEMS EVALUATED AT POWER PLANT

Data Set No.	Percent of Relative Accuracy*			
	Refrigerated Condensor and Dynasciences Model SS-330	Beckman Reflux Probe, Permeation Dryer, and Model 865 NDIR	Permeation Diluter and Dynasciences Model SS-310	Permeation Diluter and Flame Photometric (Meloy)
1	11.5	11.4	10.9	6.4
2	9.8	10.2	13.5	11.5
3	6.5	7.9	8.2	12.6
4	5.3	5.3	6.3	15.9

*Reported values are after correction to dry basis where required, and are the sum of the mean of the absolute deviation values and the 95% confidence level (computed the same way). All of these results are unchanged if the absolute value of the mean deviation is employed instead.

$$E = CF \times \frac{2090}{21-\%O_2} \quad 540 \text{ ppm } SO_2$$

where

E = emission in kilograms SO_2/2.3 x 10^9 joules heat input (pounds SO_2/million BTU heat input)

$\%O_2$ = 5% by assumption for this calculation

C = SO_2 concentration in kilograms (pounds)/meter^3 (scfd)

F = fuel factor in scfd/2.3 x 10^{10} joules (10^4 BTU) assumed to be 100 (for coal) for this calculation

The results of the two-hour zero and calibration drift tests are summarized in Table 5.

The requirements of EQP-650/2-74-013 for this test are that the drift be 2% or less for both zero and calibration. All four systems had acceptable two-hour zero drifts in both tests (data sets). Only the Reflux Probe/Permeation Dryer/NDIR System remained within specifications for both two-hour calibration drift tests. The conventional sampling (refrigerated condensor) and Model SS-330 System were acceptable in the first calibration drift test but failed the second. Both monitors operating on the permeation diluter sample failed both two-hour calibration drift tests.

Twenty-Four-Hour Zero and Calibration Drifts

Two sets of data allowing determination of the twenty-four-hour zero and calibration drifts were obtained at the power plant test site.

The discussion of the method of calculating and reporting results given above also applies to the twenty-four-hour drift test results. The results of the twenty-four-hour zero and calibration tests are summarized in Table 6.

The requirements of EPA 650/2-74-013 for these tests are 4% for zero drift and 5% for calibration drift in twenty-four hours. All systems passed

Table 5. SUMMARY OF TWO-HOUR ZERO AND CALIBRATION TEST RESULTS FOR POWER PLANT TEST SITE

Data Set No.	Percent of Emission Standard Zero and Calibration Drift* in Two Hours							
	Refrigerated Condensor and Dynasciences Model SS-330		Beckman Reflux Probe, Permeation Dryer, and Model 865 NDIR		Permeation Diluter and Dynasciences Model SS-310		Permeation Diluter and Flame Photometric (Meloy)	
	Zero	Calib	Zero	Calib	Zero	Calib	Zero	Calib
1	0.7	1.2	0.9	1.5	0.5	3.4	0.2	3.9
2	0.7	3.2	0.9	1.4	0.4	2.6	0.2	3.2

*Reported values are the sum of the mean of the absolute values of the deviations and the 95% confidence interval (computed the same way). Some of these drifts would change, but insignificantly, if the absolute value of the mean deviation had been used.

Table 6. SUMMARY OF TWENTY-FOUR-HOUR ZERO AND CALIBRATION TEST RESULTS FOR POWER PLANT TEST SITE

Data Set No.	Percent of Emission Standard Zero and Calibration Drift* in Twenty-Four Hours							
	Refrigerated Condensor and Dynasciences Model SS-330		Beckman Reflux Probe, Permeation Dryer, Model 865 NDIR		Permeation Diluter and Dynasciences Model SS-310		Permeation Diluter and Flame Photometric (Meloy)	
	Zero	Span	Zero	Span	Zero	Span	Zero	Span
1	0.8	3.2	0.7	3.2	2.0	8.4	1.6	8.7
2	1.0	2.0	2.0	5.7	1.4	6.3	1.4	9.4

*Reported values are the sum of the mean of the absolute values of the deviations and the 95% Confidence Interval (computed the same way). Some of these drifts would change, but insignificantly, if the absolute value of the mean deviation had been used.

both twenty-four-hour zero drift tests, but only the Refrigerated Condensor/Dynasciences Model SS-330 passed both calibration drift tests. Both monitors on the Permeation diluter failed both calibration drift tests, and the Reflux Probe/Permeation Dryer/NDIR System failed one of the calibration drift tests.

Response Time

The response times of all systems evaluated at the power plant site were determined twice. The results are summarized in Table 7. The requirement of EPA 650/2-74-013 for this test is 95% response in 600 seconds or less, with a deviation of less than 15% between the up and downscale responses. It may be concluded that all systems had acceptable response times. Only the refrigerated condensor system displayed more than 15% difference in the average upscale and downscale response times. This difference could have been the result of different calibrations of the zero and calibration gas flowmeters.

Operational Period

All systems operated continuously for over 168 hours in each of two correlation test cycles without special corrective maintenance, which satisfies the requirement of EPA 650/2-79-013. The errors reported above for relative accuracy and for zero and calibration drifts were obtained during these two test cycles.

Correlation Data with UV Absorption and *in situ* SO_2 Analyzers at the Power Plant Site

The power plant was equipped with both UV absorption and *in situ* SO_2 Monitors, as discussed in Section III. It was an objective of the Test Plan to obtain as much data from these analyzers as possible within the Work Plan time constraints to permit correlation of these systems with the Method 6 results. Unfortunately, it was not always possible to obtain average values of the SO_2 concentrations indicated by these

Table 7. SUMMARY OF RESPONSE TIME TEST RESULTS OBTAINED AT POWER PLANT SITE

Test Parameter (Average Value Reported)	Time to 95% Response in Seconds							
	Refrigerated Condensor and Dynasciences Model SS-330		Beckman Reflux Probe, Permeation Dryer, Model 865 NDIR		Permeation Diluter and Dynasciences Model SS-310		Permeation Diluter and Flame Photometric (Meloy)	
	Test 1	Test 2	Test 1	Test 2	Test 1	Test 2	Test 1	Test 2
Upscale	171	179	43	47	119	118	139	150
Downscale	132	134	38	41	126	118	146	144
Percent Deviation from Slowest	23	25	12	13	6	0	5	4

monitors during the time intervals of collection of Method 6 samples. Furthermore, many of the cross-checks made during the preliminary testing indicated that some results were probably erratic, and others did not correlate well. Through personal correspondence with the manufacturer's technical personnel after completion of the evaluation tests, it was learned that the UV analyzer was found to have been out of calibration during the months of the test, possibly due to an operator error. This known error required a reduction of about 15% in the reported values. After such correction and conversion to a dry basis, the average UV analyzer errors--including the 95% confidence interval--for three groups of nine data sets each, correlatable with Method 6 tests, were 11.4, 12.7, and 8.33%, respectively. Only three correlatable *in situ* analyzer data sets were obtained. They indicated an accuracy of 6.6% for the *in situ* analysis, after dry basis correction and with the 95% confidence interval included.

Summary of Performance Criteria and Test Results for Power Plant Tests

The results of all power plant testing are summarized in Table 8, along with the relevant performance criteria extracted from EPA 650/2-74-013. Average values and/or ranges of errors are used in Table 8 in the interest of achieving brevity without complete sacrifice of detail. While the above discussions of each test result contain factual comments of a passed-or-failed nature, examination of the summary data of Table 8 makes it apparent that no gross failures were observed for any of the systems evaluated. It should be noted in particular that the relative accuracy error ranges for all five instrumental systems show coincidence; that is, data groups 1 through 4 showed decreasing errors for all five systems (including the UV analyzer). This strongly suggests that undetected problems with the Method 6 analysis were involved, resulting in improved Method 6 results with time.

Table 8. SUMMARY OF PERFORMANCE CRITERIA AND TEST RESULTS FOR POWER PLANT TESTS

Test Performed	Test Performance Criteria from EPA-650/2-74-013	Refrigerated Condensor and Dynasciences Model SS-330	Beckman Reflux Probe, Permeation Dryer, Model 865 NDIR	Permeation Diluter and Dynasciences Model SS-310	Permeation Diluter and Flame Photometric (Meloy)	UV Absorption	*in situ*
Calibration Error	5%	3.1% 1.5% 2.4%	4.5% 0.6% 0.6%	(Disc Diluter used for this test only) 4.5, 4.4, 2.7%	4.0% 4.4% 2.1%	N/A	N/A
Relative Accuracy	20%	5.3 to 11.5%	5.3 to 11.4%	6.3 to 10.9%	6.4 to 15.9%	8.3 to 12.7%	6.6% (only 3 data sets
Two-Hour Zero Drift	2%	0.7%	0.9%	0.5%	0.2%	N/A	N/A
Twenty-Four-Hour Zero Drift	4%	0.9% (avg)	1.4% (avg)	1.7% (avg)	1.5% (avg)	N/A	N/A
Two-Hour Calibration Drift	2%	2.7% (avg)	1.5% (avg)	3.0% (avg)	3.5% (avg)	N/A	N/A
Twenty-Four-Hour Calibration Drift	5%	2.6% (avg)	4.5% (avg)	7.3% (avg)	9.0% (avg)	N/A	N/A
Mean Response Time	95% in 600 s	150 s	45 s	120 s	140 s	N/A	N/A
Operational Period	168 hours without special maintenance	Maintenance only between two 168-hour tests	Maintenance only between two 168-hour tests	Maintenance only between two 168-hour tests	Maintenance only between two 168-hour tests	N/A	N/A

It should also be noted that the two Dynasciences Analyzers and the Meloy Flame Photometer had rather large thermal coefficients, and that the twenty-four-hour zero and calibration drifts were not, in general, cumulative. The major sources of these drifts were as follows:

- Incomplete response within 10 minutes, on zero and span gases (especially the refrigerated condensor system).
- Ambient temperature dependence of the monitors.

The Meloy flame photometer was known to have a defective component which caused abnormally large thermal errors. From personal conversation with Dynasciences technical personnel it appears that the models evaluated are now obsolete and that smaller thermal errors should be expected from currently available designs. The Beckman Model 865 SO_2 Monitor was the only monitor evaluated having a potential direct interference by water vapor. The data indicate that the sample was sufficiently dry at all times (permeation dryer) but that this analyzer has a larger thermal coefficient than would be desired for installation in an uncontrolled environment. The typical Model 865, measuring 0-500 ppm SO_2, with a linearized output, will hold within about ±1% calibration for ±11°C (20°F) ambient temperature variations. (While this was the smallest coefficient of any of the analyzers evaluated, a two- or three-fold improvement is desirable.) In addition, during preliminary testing, it was found that the Model 865 gave erratic results when the Instrument Shed temperature reached about 55°C (131°F). This fault could be corrected by removing a circuit board cover within the analyzer. Apparently the linearizing (or another) board overheated if covered when the ambient temperature reached about 55°C.

The basic thermal sensitivity of the monitors, plus test personnel comfort considerations, necessitated incorporation of a shed ventillation fan with thermostat on/off control. This fan reduced the maximum shed temperature to about 30°C (86°F) with the doors closed. The minimum shed temperature

during the tests reported was about 10°C (50°F), which occurred during early morning and late evening when the doors were open for performance of tests. The ambient variations during the two 168-hour test cycles reported were, therefore, 10 to 30°C (50 to 84°F), with rapid changes occurring primarily at the beginning and end of each day of Method 6 correlation testing. The effects were especially pronounced on the twenty-four-hour zero and calibration draft data sets, which were always obtained early in the morning when the rate of change of ambient temperature was large.

RESULTS OF TESTING AT CLAUS SULFUR RECOVERY PLANT

Calibration Error (Before Field Installation)

This test was performed at the conclusion of the laboratory familiarization phase before transport to and installation at the Claus Sulfur Plant test site. Gases were introduced through the span gas valves in the sampling interface housing. The results are summarized in Table 9. Because the response of the Houston Atlas System is very slow (over 10 minutes), it was tested on only two gases, as permitted in the newer EPA Procedure (Federal Register, Sept. 11, 1974). In the final Work Plan the Houston Atlas was the only system used for sampling of the tail gas before incineration.

From the results summarized in Table 9, it appears that none of the systems tested met the calibration error specification of EPA 650/2-74-013 (5% or less) but it is important to note that the gases were not of precisely known concentration on all of the gases tested. The Model 865 NDIR gave acceptably reproducible results on the repeat readings, meaning that either the linearization was in error or the tank mixtures were not as labeled. The Houston Atlas system (two H_2S gas mixtures only) came very close to "passing" this test, against tank labels. Similar drifts of the Dynasciences Model SS-310 and the Meloy Analyzer outputs for

Table 9. CALIBRATION ERROR TEST RESULTS OBTAINED BEFORE TRANSPORT TO AND INSTALLATION AT THE CLAUS SULFUR PLANT TEST SITE

Test Gas, Percent Pollutant in N_2	Percent Error* Calculated for Each System			
	Beckman Reflux Probe, Permeation Dryer, Model 865 NDIR (SO_2 Only)	Permeation Diluter with Dynasciences Model SS-310 (SO_2 Only)	Permeation Diluter with Flame Photometric (Meloy) (SO_2 Only)	Houston Atlas Diluter and Monitor (H_2S Only)
0.375 SO_2	11.9	4.9	3.0	--
0.554 SO_2	1.8	9.2	6.6	--
0.881 SO_2	0.6	6.5	8.1	--
0.400 H_2S	--	--	--	5.4
0.904 H_2S	--	--	--	2.2

*The reported errors are the sum of the mean of the absolute values of the deviations and the 95% confidence interval (computed the same way). Two errors in this Table would be altered, but insignificantly, if the absolute value of the mean deviation had been used.

repeat analyses during the test suggest that the Dyfusatron temperature was changing slightly during the test. Since the "standards" were questionable, there appeared to be no merit in repeating this test.

Relative Accuracy of Systems after Incinerator (SO_2 Only)

Thirty-five valid sets of data were obtained for correlation to compliance Test Method 6 (SO_2) for each of the three monitors sampling for SO_2 after tail gas incineration. These thirty-five sets were divided into four groups of nine data sets each, according to the approach outlined in the Federal Register. Since the test site's UV monitor readings were not taken simultaneously, they are not included in these results. The results (corrected to a dry basis and with the 95% confidence interval included) for the three monitors for the four groups of nine data sets are given in Table 10.

The requirement of EPA-650/2-74-013 for this test is an accuracy of 20% or less. Only the Meloy Permeation Diluter and Flame Photometric Analyzer failed this test (3 out of 4 tests). The third data group includes one set of data taken during a transient plant upset. During the upset period, the SO_2 concentration exceeded 1% briefly, which was over-range for all three monitors. It is possible that the linear ranges of monitor operation were exceeded for this one set of data (out of nine sets).

Relative Accuracy of System before Incinerator (H_2S)

Compliance Test Method 11 for H_2S was found to be unusable on the high (0.25% and more) H_2S concentrations encountered. Consequently the only correlation possible was against the H_2S indicated by the existing test site PGC. Details of the problems encountered with Method 11 are contained in Appendix D. The valid sets of data for correlation between the HA and the PGC were divided chronologically into two groups of nine data sets each for calculating relative accuracy. In summary, the

Table 10. SUMMARY OF RELATIVE ACCURACY RESULTS OBTAINED WITH THREE SYSTEMS MONITORING THE CLAUS SULFUR PLANT EMISSIONS AFTER INCINERATION

Data Group No.	Percent Relative Accuracy* of Systems Evaluated		
	Beckman Reflux Probe, Permeation Dryer, Model 865 NDIR	Permeation Diluter with Dynasciences Model SS-310	Permeation Diluter with Flame Photometric (Meloy)
1	3.8	16.9	27.1
2	5.4	10.4	10.5
3	9.6	15.3	27.0
4	3.0	18.7	21.2

*Reported values are after correcting the dry basis where required, and are the sum of the mean of the absolute deviation values and the 95% confidence interval computed the same way. About one-half of these results would be altered by computing with the absolute value of the mean of the deviations, but the changes would not affect the conclusions that might be drawn. See Appendix F for examples of these results computed by each method.

relative accuracies determined for the HA Diluter and Monitor were 44% and 38%, respectively, for the two groups of nine data sets each. The Houston Atlas System indication was lower than the process gas chromatograph in every case, making the 6% difference for the two groups of data significant with regard to stability and reproducibility. This is an arbitrary determination of the relative accuracy of the HA Diluter and Monitor; the accuracy of the process gas chromatograph used for reference could not be rigorously validated within the scope of this evaluation.

Two-Hour Zero and Calibration Drift

The general EPA practice of reporting these drifts in terms of the percentage of the relevant emission standard is inappropriate for the results of this evaluation. The reason is that the instrument ranges were made 0 to 1% SO_2 (and H_2S) to be consistent with the actual range of sample concentration. However, the applicable emission standards are equivalent to about 15 to 20 ppm SO_2 and 0.15 ppm H_2S concentrations, which are small fractions of 1% of the instrument full-scale ranges. To resolve this situation in a manner which is in keeping with the basic EPA reporting philosophy, the calculations were made as if mid-scale instrument output coincided with the emission standards, i.e., 0.5% of both SO_2 and H_2S. The results for the two-hour drift tests, reported upon this basis, are summarized in Table 11. The reported results are dry-basis corrected, and the 95% confidence interval is included.

The two data groups contained 15 data sets each for the SO_2 Monitors sampling the incinerated tail gas. Data Group No. 1 for the Houston Atlas System monitoring H_2S before incineration contained 12 data sets.

The requirements of EPA 650/2-74-013 for two-hour zero and calibration drift are both 2%. Only one system (NDIR) was within specification for both zero tests, and of the other systems only the Meloy was within specifications for one of the two zero tests. All but one of the systems

Table 11. SUMMARY OF TWO-HOUR ZERO AND CALIBRATION TEST RESULTS OBTAINED AT THE CLAUS SULFUR RECOVERY PLANT

Data Group No.	Two-Hour Zero and Calibration Drifts,* Percent of Mid-Scale (0.5% SO_2 or H_2S) Monitor Output							
	Beckman Reflux Probe, Permeation Dryer, Model 865 NDIR (SO_2)		Permeation Diluter Dynasciences Model SS-310 (SO_2)		Permeation Diluter, Flame Photometric (Meloy) (SO_2)		Houston Atlas Diluter-Monitor, before Incinerator (H_2S)	
	Zero	Calib	Zero	Calib	Zero	Calib	Zero	Calib
1	0.8	1.8	4.6	13	1.4	33	6.0	50
2	0.8	2.2	5.2	14	4.2	27	-	-

*These drifts are the sum of the mean of the absolute values of the deviations and the 95% confidence interval computed in the same way. Most of these drifts are altered, but insignificantly if computed with the absolute value of the mean deviation.

(NDIR) failed both of the calibration drift tests, and it failed one of them. An explanation of these results in terms of intermittent electronic failures is given in the following discussion of the twenty-four-hour drift test results.

Twenty-Four-Hour Zero and Calibration Drift

Two data groups for determination of twenty-four-hour zero and calibration drifts were obtained for the three systems monitoring the Claus Plant tail gas after incineration and the one monitoring before incineration. These drifts were calculated and are reported on the basis outlined in the previous paragraph for the two-hour drift data. The data are summarized in Table 12.

The requirements of EPA 650/2-74-013 for twenty-four-hour drifts are 4% for zero and 5% for calibration. Only one system (NDIR) met the zero drift specification for both tests, while the other three failed both tests. All systems failed the calibration drift requirement on both tests.

Reference to the raw data indicates that the Model 865 NDIR readings on successive morning calibration cycles did not shift more than 4% of reading in any case, and that the drifts on upscale gas (about 90% of full scale) were generally both plus and minus. This raw data (mV output) result is inconsistent with the calculated results for calibration drifts upon which the data of Table 12 are based. While a repeat calculation would be possible, it would not significantly alter the results; rather, raw data for the other systems reflect the erratic behavior described further below. No attempt was made to assess the validity of the calculated values of Table 12 for the erratic systems.

The Meloy Dyfusatron and photomultiplier tube (PMT) temperature controls had both become unreliable by the time these (Claus Plant) tests were

Test 12. SUMMARY OF TWENTY-FOUR-HOUR ZERO AND CALIBRATION TEST RESULTS OBTAINED AT THE CLAUS SULFUR RECOVERY PLANT

Data Group No.	Twenty-Four-Hour Zero and Calibration Drifts,* Percent of Mid-Scale (0.5% SO_2 and H_2S) Monitor Output							
	Beckman Reflux Probe, Permeation Dryer, Model 865 NDIR (SO_2)		Permeation Diluter, Dynasciences Model SS-310 (SO_2)		Permeation Diluter, Flame Photometric (Meloy) (SO_2)		Houston Atlas Diluter-Monitor before Incinerator (H_2S)	
	Zero	Calib	Zero	Calib	Zero	Calib	Zero	Calib
1	1.2	12	5.8	36	5.2	40	20	61
2	1.0	7.2	5.8	36	5.0	40	20	135

*The drifts reported are the sum of the mean of the absolute values of the deviations and the 95% confidence interval computed in the same way. These drifts are altered if calculated using the absolute value of the mean deviation, but not to the extent that conclusions drawn from the results would be affected.

performed. Examination of the two-hour and twenty-four-hour drift raw data indicates that the two analyzers monitoring the Dyfusatron diluted sample drifted randomly, and they also did not track each other. The Dynasciences Model SS-310 output would be affected by the Dyfusatron temperature (dilution ratio changes) only, while the Meloy Flame Photometric Monitor output would be affected by both the Dyfusatron and the PMT temperature. The two effects, therefore, probably account for both the random and the non-tracking nature of the two outputs.

Unfortunately, the Houston Atlas System had also become intermittent by the time these parts were performed. The problem was not located and corrected primarily because intermittent failures are very difficult to isolate and identify. The raw data reflect the nature of the problem encountered, and also indicate that periods of static performance were observed. The raw data may be employed for new calculations if satisfactory criteria for rejection of some data are available. For example, if only the data for April 6, 7, and 8 are considered, the Houston Atlas System performed very well.

It was decided that the tests should be continued after consideration of the following factors:

- The major objective of the test was to evaluate the performance of sampling interface and monitoring systems at the site.
- The intermittent electronic failures (of three of the four monitors) did not relate directly to the test site application. That is, they had apparently developed during, and had also effected the laboratory performance noticeably prior to field installation.
- The erratic behavior was random, and the general impression was that the results obtained when normal operation prevailed were satisfactory.

In summary, random failures (probably electronic) of three of the four monitors adversely affected the evaluation results, but did not preclude accomplishment of the primary objective. With no indication of degradation of any component of the systems due to the nature of the special application, the tests were continued. The large errors observed should not be construed to mean that any given system proved to be unsatisfactory since all evidence indicated that the causitive electronic failures were not brought about by the evaluation testing.

Response Time

The response times of three systems evaluated at the Claus Plant site after incineration were determined twice. That of the Houston Atlas (before incineration) was determined once. The results are summarized in Table 13. The requirement of EPA-650/2-74-013 for this test is 95% within 600 seconds, with a deviation of less than 15% for up and downscale responses. All systems except the HA exceeded the response time requirement. In addition, the difference in up and downscale response times for two systems (NDIR and Houston Atlas) were within the required 15%, while the two monitors on the Meloy Permeation Diluter failed the response time difference requirement. This could have been due to a simultaneous thermal transient (loss of control) and/or due to condensation within the sampling system which escaped notice. It is probable that this result was spurious, since reasonably fast and symmetrical response was normal for the Dyfusatron System.

Operational Period

Following several sampling system revisions during start-up, the Reflux Probe/Permeation Dryer/NDIR System operated for over 168 hours without maintenance beyond that specified in the operating manual.

The Permeation Diluter (Meloy) Dynasciences System operated for over 168 hours, but was erratic in output. The erratic behavior is believed

Table 13. SUMMARY OF RESPONSE TIME TEST RESULTS OBTAINED AT CLAUS PLANT. All times except for Houston Atlas are for 95% response.

Test Parameter (Average Values Reported)	Time to 95 Percent Response in Seconds (90 Percent and Minutes for Houston Atlas)							
	Beckman Reflux Probe, Permeation Dryer, Model 865 NDIR (SO_2)		Permeation Diluter, Dynasciences Model SS-310 (SO_2)		Permeation Diluter, Flame Photometric (Meloy) (SO_2)		Houston Atlas Diluter and Monitor (H_2S)	
	Test 1	Test 2	Test 1	Test 2	Test 1	Test 2	Test 1	Test 2
Upscale	31	27	200	92	191	60	17 min	--
Downscale	26	28	237	99	255	225	16 min	--
Percent Deviation from Slowest	10	4	16	7	25	73	6 min	--

to have been the result of Meloy Dyfusatron temperature control failures and/or to Meloy Flame Photometric Analyzer intermittent problems, as detailed above.

The Meloy System also developed problems with the photomultiplier temperature controller, which further degraded the stability of the flame photometric analyzer. It is believed that the rapid decrease in circuit reliability of the Meloy System observed between the time of first tests and the Claus Plant tests was a consequence of the breadboard quality of the circuit boards used in the particular analyzer evaluated.

The Houston Atlas Diluter and lead acetate paper tape sampler-type monitor operated erratically for unknown reasons. The problem that caused substandard performance of the Houston Atlas System during most of the field testing was not identified, but had the characteristics of an intermittent electronic failure.

None of the electronic problems appeared to be related to the characteristics of the Claus Plant samples, which means that with respect to the basic objective of the evaluation the systems could be said to have met the 168-hour maintenance-free performance criteria.

SUMMARY OF PERFORMANCE CRITERIA AND TEST

Results for Claus Plant Tests

The results of all Claus Plant testing are summarized in Table 14, together with the applicable performance criteria extracted and/or adapted from EPA 650/2-74-013. Comparison of this summarized data to that of Table 8 for the Power Plant test results indicates that the performance of the systems was generally worse at the Claus Plant. However, it must be noted that failure of temperature controls in the Meloy

Table 14. SUMMARY OF PERFORMANCE CRITERIA AND TEST RESULTS FOR CLAUS PLANT TESTS

Test Performed	Test Performance Criteria EPA-650/2-74-012	Beckman Reflux Probe, Permeation Dryer, Model 865 NDIR (SO_2 only)	Permeation Diluter, Dynasciences Model SS-310 (SO_2 only)	Permeation Diluter, Flame Photometric (Meloy) (SO_2 only)	Existing PGC Sample Tap, Houston Atlas Diluter/Monitor (H_2S only)
Calibration Error	5%	12% 2% 0.6%	5% 9% 6.5%	3% 7% 8%	5.4% 2.2%
Relative Accuracy	20%	4 to 10%	10 to 19%	10 to 27%	38 to 44% (against PGC)
Two-Hour Zero Drift	2%	0.8%	4.9% (avg)	2.8% (avg)	6%
Twenty-Four-Hour Zero Drift	4%	1% (avg)	6% (avg)	5% (avg)	20% (avg)
Two-Hour Calibration Drift	2%	2% (avg)	13.5% (avg)	30% (avg)	50%
Twenty-Four-Hour Calibration Drift	5%	10% (avg)	36% (avg)	40% (avg)	98% (avg)
Appropriate Mean Response Time	95% in 600 s	30 s	150 s	200 s	960 s
Operational Period	168 hours without special maintenance	No special maintenance required	No special maintenance given	No special maintenance given	No special maintenance given

Analyzer affected both monitors operating from the Dyfusatron equally, and had an additional affect upon the Meloy Flame Photometric Analyzer.

The Houston Atlas Mechanical Diluter and lead acetate paper tape analyzer became rather erratic after several days of testing, and the problem was not identified. The behavior appeared to be characteristic of intermittent electronics, but the summary data of Table 14 indicate that the results of correlation testing (against the PGC only) were much less sporadic than were the two- and twenty-four-hour zero and calibration drift test results. This suggests that there may have been a leak in the zero calibration control valves (mounted in the contractor-furnished sampling interface housing) which adversely affected the zero and calibration drift results. In this regard, it should be noted that the Houston Atlas readout is based upon the rate of change of paper tape reflectance, and any large transients in concentration at the time this rate was determined would result in an erratic output.

The Beckman Model 865 was apparently improperly linearized, since it was 12% high at 37.5% of scale in the calibration error test. It could have been adjusted to give good agreement with the three test gases, but this would have violated the purpose of the evaluation. It was linearized against the original calibration data supplied in the instruction manual, just as it would have been for a typical customer. The relatively large twenty-four-hour calibration drift of the Model 865 NDIR shown in Table 14 (10%, in terms of mid-scale SO_3 concentration) raises a question with regard to the accuracy of data reduction. Referring to the source data for Table 14 results, there was an apparent calibration drift of 0.08% SO_2 for the second entry. This drift was about four times as large as the average of the other five entries, and may have inadvertently included a manual resetting of the calibration which should have been excluded. Examination of the raw data supports the contention that an intentional recalibration made at 1030 hours on 4-7-75 was inadvertently

included as a calibration drift. No large drifts are reflected by the raw (millivolts output) data. Elimination of this one data point would reduce the average error in Table 14 to 7%. The difference in results is not considered to be large enough to justify repeating the calculations for the one analyzer.

Finally, it should be noted that all zero and calibration drift data are referred to mid-scale output. Consequently, all drifts are only about one-half as large if calculated as the percentage of the calibration gas (93% of scale).

In summary, it is believed that the results presented in Table 14 do not indicate significant failures to comply with the requirements when proper allowance is made for the known deficiencies in the analyzers under test. The results should not be construed to mean that the normal commercial analyzers of the types tested would suffer from similar problems. Perhaps a longer test period would have indicated a significant degradation in one or all systems, but there was no indication that the systems tested were degrading with time because of the environment or because of the nature of the sample streams.

COMMENTS ON SAMPLING/INTERFACE SYSTEMS, AND FIELD PERFORMANCE

A major objective of the subject contract was the evaluation of sampling/interface systems. Accordingly, the salient design features and field performance results for each system are summarized in the following paragraphs.

Refrigerated Condensor-Type System (Power Plant Only)

System Features -

An overview of the salient features of this system is given by the following:

- Probe using 20-micrometer filter with automatic air blowback cleaning, followed by a heated one-micrometer fiber glass filter.
- Heated Teflon sample line to condensor.
- Refrigerated condensor (0.5% water vapor in effluent) with corrosion-resistant automatic drain trap (PVC).
- Materials contacting sample were alloy 20, 18/8 stainless steel, Teflon, glass, Kynar,* PVC, Viton,** and Teflon-coated stainless steel.
- An electrochemical SO_2 monitor (Dynasciences Model SS-330) analyzing on a dry basis.

Field Performance —

Comments on the field performance and the degradation observed by visual inspection after 60 to 70 days of continuous testing are as follows:

- Probe filter welded joint corroded and filter fell off by the end of the Power Plant tests. The time to failure is unknown.
- One-micrometer filter (heated) collected a great deal of dry fly ash.
- Refrigerated condensor and PVC trap both operated continuously and there was no evidence of corrosion of the 316 stainless steel parts.
- Diaphragm sample pump with Teflon-coated 316 stainless-steel diaphragm showed evidence of corrosion occurring at pump outlet only.

---

* Registered trademark of the Penn Walt Corporation
**Registered trademark of the duPont E.I. DeNemours and Company

Meloy Permeation Diluter System (Both Sites)

System Features

The sampling probe and interface were of contractor design. The system was similar to the others in all matters of choice. The important features are as follows:

- Probe using 5-micrometer filter with automatic air blowback cleaning, but no additional filter because of the low Meloy sample flow rate.
- Heated Teflon sample line up to Meloy Analyzer.
- Permeation dilution by diffusion of sample constituents through a Teflon membrane into a carrier air stream (Meloy Dyfusatron).
- Materials contacting the undiluted sample upstream of the Meloy Analyzer were 18/8 stainless steel, Teflon, glass, Kynar, and Viton.
- An electrochemical SO_2 monitor (redundant), analyzing on a wet sample basis (Dynasciences Model SS-310).
- A flame photometric total sulfur monitor (Meloy), analyzing on a wet sample basis.

Field Performance -

Comments on the field performance and the degradation observed by visual inspection after 60 to 70 days of use are as follows:

- Evidence of probe filter corrosion was found.
- Dyfusatron membrane was replaced several times due to puncturing by pressure surges (see comments following).
- Low sample flow rate necessitated field addition of heating of the stack-to-interface housing flange to avoid condensation of moisture in the probe.
- After the Claus Plant evaluation, white-green-yellow deposits were found in the probe, but the Alloy 20 probe did not corrode.

The failures of the Dyfusatron Teflon membrane require additional comment. The Dyfusatron membrane (0.05-mm-thick Teflon at up to 208°C) will not tolerate differential pressures of any magnitude. After experiencing a permeation membrane failure in the initial laboratory, familiarization tests, support screens (stainless steel mesh), and suitable positioning rings were added to provide improved support for the membrane. (Meloy has added supports to later models of the Dyfusatron.) In retrospect, very fine screens or sintered discs would have been superior and would not have affected the membrane permeation rate or speed of response significantly. Numerous membrane failures still occurred, as detailed below.

The Meloy Analyzer was designed for sampling from an excess of sample gas at approximately atmospheric pressure, which the power plant stack and Claus Plant duct provided. Zero and calibration gases had to be delivered to the Meloy unit on the same basis, which necessitated the use of excess gas flow vented to atmospheric pressure at the Meloy unit zero and calibration gas inlet ports. Since it was an objective of the program to introduce standardization gases as close to the sampling point as possible, the built-in Meloy standardization solenoid valves were disconnected and duplicated in the contractor-furnished sampling interface housing--as they were for the other systems evaluated. The Meloy unit included a negative pressure actuated relief valve near the Dyfusatron to protect the permeable membrane (raw sample side) from excessive negative pressures. After the second membrane failure in laboratory testing, the Meloy relief valve was replaced with a valve that operated at a lower differential pressure and had a lower flow impedance. A similar positive pressure actuated relief valve was used in the contractor-designed interface housing to protect against positive pressure surges due to introduction of standard gases. In the preliminary power plant tests, it was found that both relief valves had a tendency to stick (either open or closed). Both were moved into the Meloy unit and located in a lower temperature zone than was the original Meloy relief valve. However, failures of the

membrane were still experienced. The carrier gas flow system of the Meloy is much less complicated than is the raw sample system; consequently, no carrier-side pressure transients were anticipated. It is possible that unrecognized factors caused failures due to carrier-side pressure transients, but it is more probable that the very light relief valves (set for operation on a differential of only about 25 cm of water column) were sticking even when maintained near ambient temperature.

Permeation Drying System (Both Sites)

System Features

- Reflux probe (rather than a probe filter) and a 1-micrometer fiber glass filter for the total sample flow.
- Permeation distillation dryer to reduce effluent moisture to less than 0.1%.
- Materials in contact with the sample were Alloy 20, 18/8 stainless steel, Teflon, glass, Kynar, Viton, Teflon-coated stainless steel, and the "plastic" permeation element tubes, tube headers, and the cement used to bond the tubes to the headers.
- Model 865 NDIR SO_2 Monitor, analyzing on a dry sample basis.

Field Performance -

Comments on the field performance and the degradation observed after 60 to 70 days of continuous operation are as follows:

- Shrinkage of length of bundle of water-permeable tubes caused inlet side tube header to crack and then crumble.
- Coalescing of sulfuric acid at the outlet end of the permeation dryer resulted in degradation of the header and/or element, forming a black, rubber-like mass.
- A stainless-steel relief valve (Viton seat) stuck closed, eliminating the reflux action and resulting in intake of beyond normal amounts of fly ash.

- One-micrometer filter (heated) collected a large amount of dry fly ash.
- Brown acidic droplets were visible throughout the part of the system mounted in the interface housing, indicating inadequate housing heater operation.
- Inadequate heating caused condensation in and corrosion of the Teflon-coated stainless-steel diaphragm sampling pump.
- White, water-soluble material accumulated in the cooler zones of the reflux system at the Claus Plant site. (See comments below.)
- The Beckman Model 865 NDIR SO_2 Analyzer showed some problems with regard to ambient temperature effects. In addition, one defective circuit board was replaced during the laboratory familiarization phase prior to the power plant tests, and the latest design revision was incorporated to provide independence of adjustment of the zero and calibration controls.

An attempt was made to analyze a sample of the white deposit found after testing at the Claus Plant. Briefly, the material was highly soluble in water. A barium chloride test indicated that the material was not a sulfate. An infrared spectrophotometer absorption scan was made on a sample (formed into a KBr pellet) with inconclusive results. When wetted with a drop of KOH solution, the salt turned yellowish and the odor of ammonia was observed--proving that it was an ammonium salt. No attempt was made to identify the specific salt, but ammonium chloride power condenses at 340°C, is quite soluble in water, and is white. Deposits found in the probe used with the permeation diluter system were faintly colored, but were probably the same salt. According to the test site personnel, traces of ammonia are found in the tail gas, both before and after the incinerator.

Condensor, Mechanical Diluter, Lead Acetate Tape (Claus Plant Only)

System Features -

- Sample was obtained from an existing tap used for a process gas chromatograph (PGC) after removal of free sulfur by a steam temperature-controlled condensor.
- Sulfur and water removal by a chilled-water-cooled condensor with manual drain and steam cleaning features, followed by submicrometer filtering.
- Materials contacting the sample up to the mechanical diluter (Houston Atlas) were 18/8 stainless steel, Teflon, glass, Viton, and carbon steel.
- Mechanical dilution of sample by carrier air (Houston Atlas).
- Lead acetate paper tape type H_2S analyzer (Houston Atlas) analyzing on a dry sample basis.

Field Performance -

The major results of field testing and the observations made by visual inspection during and after testing for about 30 days are as follows:

- Sulfur condensed in the electrically heated line between the existing steam temperature-controlled condensor and the chilled-water-cooled condensor, indicating that a higher temperature was desirable.
- Steam cleaning of the chilled-water-cooled condensor did not remove all sulfur from the cooling coil, indicating that a higher steam pressure is desirable.
- The submicrometer filter element turned from white to green color, indicating a possible reaction with the sample.
- There was no evidence of corrosion except for rusting of the carbon steel chilled-water condensor parts.

Summary of Desired Improvements in Systems

The following brief comments summarize the field performance results from the standpoint of features known to require improvement.

Refrigerated Condensor System -

- Better corrosion resistance of the stainless-steel probe filter welds is desirable.
- The diaphragm pump (stainless steel with Teflon-coated stainless steel disphragm) corroded significantly where condensate was allowed to form. Better corrosion resistance of the pump is desirable.
- Location of the condensor near the probe to shorten heated line length would improve the speed of response.

Permeation Diluter (Meloy) System) -

- Provision of improved support and/or pressure surge protection for the permeable membrane is highly desirable.
- A sampling system permitting a higher flow rate would significantly improve the response time.
- A built-in scheme for conversion of results to a dry basis analysis would facilitate correlation to Compliance Test Method data and to the emission standards, which are also on a dry basis. (This point must be balanced against the possible advantages of direct, wet sampling and the difficulty of making the conversion to dry basis internally.)

Permeation Drying System -

- Materials of construction of the Permapure Products, Inc., Dryer should be changed for better compatibility to SO_2, sulfuric acid, and other common flue gas constituents.

- Allowance for the large shrinkage of the dryer tube material must be made in the design of the assembly. Otherwise, this special material appeared to be satisfactorily compatible with the gases sampled.
- Better corrosion resistance of the diaphragm pump, which corroded significantly where condensation occurred, is desirable.
- A more uniform controlled temperature for the sampling/interface housing, and especially for the sample pump, would be beneficial.

Disc Diluter (Not Fully Evaluated Due to Failure) -

- Redesign of the rotating disc drive train would permit continuous operation with acceptable disc leakage.
- Redesign of disc thrust loading mechanism would allow for greater buildup of fly ash and/or operating temperature changes without creating galling and binding.
- Choice of a disc material more compatible to the application than Delrin or Teflon. In particular, a high temperature material is required for general sampling applications.

Chilled-Water Condensor -

- Better corrosion resistance (than galvanized iron pipe) is required for long-term service.
- Closer coupling to the high temperature source and/or higher temperature for the line to the condensor to prevent condensation of sulfur is required for longer service.
- Empirical selection of steam cleaning parameters, and automation of the cleaning cycle, would be important with regard to maintenance requirements.
- The Houston Atlas System responds very slowly but no specific recommendations for improvement can be made because of the brief period of the evaluation.

SECTION VI

APPENDICES

A. ORIGINAL AND REVISED WORK PLANS FOR FIELD TESTS AT POWER PLANT. 88

B. EPA DOCUMENTS USED IN DESIGN OF FIELD WORK PLANS. . . . 115

C. MONITORING SYSTEMS DRAWINGS 139

D. RESULTS OF AN EVALUATION OF EPA COMPLIANCE TEST METHODS 6(SO_2) AND 11(H_2O) IN THE RANGE OF 0.15 TO 0.9% OF EACH IN NITROGEN 148

E. MISCELLANEOUS TESTS, CALCULATIONS, AND RESULTS. 167

F. COMMENTS ON INTERPRETATION OF CALCULATIONS AND REPORTING INSTRUCTIONS OF EPA-650/2-74-013. 188

APPENDIX A

ORIGINAL AND REVISED WORK PLANS FOR FIELD TESTS AT POWER PLANT

CONTENTS

Page

Original Work Plan for Field Tests at Power Plant. 90

Revised Work Plan for Field Tests at Power Plant 107

Revised Field Test Plan for Claus Plant. 110

October 7, 1974

(Revised and abridged June 25, 1975,
for inclusion in Final Report)

ORIGINAL WORK PLAN FOR FIELD TESTS AT POWER PLANT

1.0 INSTALLATION AT POWER PLANT SITE

The stack will be breached at the 13.41-meter (44-ft) level where probes and associated gear for the four analytical systems and for manual sampling will be located. The instruments and peripheral gear will be located in a shelter that will be erected on a platform near the probes.

2.0 SAMPLING/INTERFACE/MONITORING SYSTEMS

All systems except the Disc Diluter system will be equipped with automatic zero and span modules. Detailed drawings of the complete systems are located in Appendix B and the systems are described in Section IV of the Final Report.

2.1 Analytical System Operation and Maintenance

All four systems will be operated continuously for the 30-day test period during which all but the Disc Diluter System will be zeroed and spanned automatically, normally on a 24-hour basis. The Disc Diluter System will be zeroed and spanned manually and only at those times that manual samples are being taken.

Reasonable, normal maintenance--as specified in the manufacturers' instruction manuals--will be performed. However, a major breakdown in any of the analytical systems requiring extensive field or factory service or repair may result in cessation of testing of that particular system. This is a necessary condition of the Field Test Work Plan since the period of testing is too short to allow abnormal service or repair and still allow obtaining all of the specified, correlated data.

2.1.1 Disc Diluter

The Disc Diluter provided for this program was designed for sampling stacks for relatively short periods and not for continuous operation. This is implicit in the maintenance instructions supplied with the equipment, summarized as follows:

NOTE

> Due to insufficient continuous testing, exact data for recommended maintenance schedule are lacking.

1. Disc resurfacing: The Delrin disc required resurfacing at one-hour intervals for stack conditions of 148.8°C (300°F), 3% moisture, and heavy fly ash loading. The Karak disc was still OK after 10 hours at temperatures from 148.8° to 387.7°C (300° to 550°F).
2. Disc replacement: Replacement should occur when disc thickness is less than 6.4 mm (0.250 inch)
3. Vacuum filter: The filter was never replaced. Expected intervals of replacement are every 24 hours except under very heavy particulate loading.
4. Silica gel dryer: The dryer requires changing every 3 hours at moisture level of 3% and 148.8°C (300°F).
5. Disc head lubrication: Intervals have not been determined. Lubricate with silicone grease whenever disassembled.

It will be impossible to resurface the disc at such frequent intervals. If such is required, the attempt to operate the Disc Diluter System on a continuous basis will be abandoned. It is hoped that under the conditions of the test site stack the disc will provide reasonable service and continuous operation will be possible. Also, it would be impossible to replace the silica gel every 3 hours. To avoid this, an aspirator will be substituted for the normal pump in the system, eliminating the need for the silica gel dryer. The effect this may have on the overall performance of the system is unknown.

3.0 INFORMATION TO BE ACQUIRED

The contract states, "Systems outlined under 3.a. shall be installed and operated for a thirty-day period. Each system shall have the capability for automatic zero and calibration every 24 hours. System response shall be correlated with EPA Standard Compliance Test Method 6 for SO_2. A minimum of 27 Method 6 samples shall be taken at intervals of nine samples per week over the thirty-day period such that each system can be correlated with at least 18 different manual samples." Summarized, this calls for 27 Method 6 analyses of which 18 (or more) shall be correlated with readings of each monitoring system. In view of the published EPA performance specifications for stationary-source monitoring systems (EPA-650/2-74-013), it would enhance the value of this study if it were possible to include the determination of all of the parameters listed there:

1. Relative Accuracy (obtainted from the correlated readings)
2. Calibration Error
3. Two-Hour Zero Drift
4. Twenty-Four-Hour Zero Drift
5. Two-Hour Calibration Drift
6. Twenty-Four-Hour Calibration Drift
7. Response Time
8. Operational Period

The relative accuracy is, of course, the information that is required by the above-quoted portion of the contract. The 24-hour zero drift and the 24-hour calibration drift can be determined by utilizing the specified capability for automatic zero and calibration. The other five parameters are beyond the original scope of the contract but it appears that they can be included to a large extent in the tests performed at home and at the steam plant without increasing the total cost of the project.

All 8 parameters will be determined for the conventional Sample Handling/ Dynasciences System, the Reflux Probe/NDIR System, and the Meloy Permeation Diluter/Flame Photometric System. Parameters 1, 2, and 7 will be determined

for the EPA Disc Diluter/Dynasciences System. The 2-hour and 24-hour zero and span drifts will not be determined for the latter system since it will not have the automatic zero and span capability. The standard information on operational period will be replaced by a full report on the maintenance log for this system.

4.0 DATA TO BE ACQUIRED FOR THE VARIOUS PARAMETERS

4.1 Relative Accuracy

At least 27 manual stack samples will be taken for analysis by the wet chemical Method 6.

NOTE

> The standard Method 6 will be followed except that stack velocity will not be measured since it is not required for determining concentration.

Simultaneous output signal recordings will be obtained with all four analytical systems during 18 (or more) of the manual samplings. The zero and span readings will be checked on all analytical systems before and after taking each manual sample.

Immediately before or after taking each Method 6 sample, the water vapor content of the stack gas will be determined by Standard Reference Method 4.

4.2 Calibration Error

During checkout testing of the analytical systems before taking them to the field site, the following procedure will be performed:

- Each system will be calibrated with SO_2/N_2 gas blends representing approximately 30, 60, and 90 percent of span. A series of 5 nonconsecutive readings will be made at each concentration (Example: 30%, 90%, 60%, 90%, 30%, 90%, 60%, etc.).

This is the only parameter that will be determined at home. All others will be done at the field site.

4.3 Two-Hour Zero and Span Drift

Readings will be obtained on three of the four systems for zero and calibration gases at 2-hour intervals until 15 sets of data are obtained. During the period of this test, the automatic zero and span modules will be set to operate every two hours. The Disc Diluter system will not participate in this test.

Calibration checks will be made with test gas concentration between 70 and 90 percent of span.

4.4 Twenty-Four-Hour Zero and Span Drift

Readings will be obtained on three of the four systems for zero and calibration gases at 24-hour intervals throughout the 30-day test period in similar manner to that described in the 2-hour test. The Disc Diluter system will not participate in this test.

4.5 Response Time

Each of the four systems will be flushed with zero gas, introduced as close to the sample interface as possible. After the reading has stabilized, the upscale calibration gas of concentration between 70 and 90 percent of span will be quickly substituted for the zero gas. The time from switching gases to final stable response will be recorded. After the system response has stabilized at the upper level, zero gas will be quickly substituted for the upscale gas and the time from switching gases to final stable response will be recorded. This test sequence will be performed three times.

4.6 Operational Period

Detailed maintenance logs will be kept for each analytical system.

5.0 DATA ANALYSIS AND REPORTING

5.1 Relative Accuracy

This calculation uses the 18 (or more) Method 6 test data and the analytical system recordings obtained during the manual sampling. The recordings are first corrected for any zero or span drift occurring during the sampling period, then the average reading over the sampling period is determined (by eye) and converted to concentration by reference to the zero and span readings taken immediately before and after the sampling period. Finally, the concentration figure is converted to dry basis in the cases of the Disc Diluter system and the Permeation Diluter System, using the result of the water vapor determination (Method 4) performed immediately before or after the sampling period. The concentration figure is already on the dry basis in the cases of the conventional system and the Reflux System.

The Method 6 concentration is subtracted from the analytical system concentrations. This is repeated for all 18 (or more) sets of data. Using these data, the mean difference and the 95% confidence interval will be computed for each analytical system. The sum of the absolute mean value plus the 95% confidence interval will be reported, as a percentage of the mean reference value, for each analytical system.

5.2 Calibration Error

Using the data from Section 4.2, the known value will be subtracted from the value shown by each analytical system for each of the 5 readings at each span test concentration. The mean of these difference values and the 95% confidence interval will be calculated for each of the analytical

systems. The sum of the absolute mean value plus the 95% confidence interval will be reported, as a percentage of each test gas concentration, for each analytical system.

5.3 Two-Hour Zero Drift

Using the zero readings from Section 4.3, the drift occurring during each 2-hour period during the test will be calculated for each analytical system. From these sets of data, the mean value and the 95% confidence interval will be calculated for each analytical system. The sum of the absolute mean value plus the 95% confidence interval will be reported, as a percentage of the full-scale concentration range, for each of the analytical systems.

NOTE

"Full-scale concentration range" refers to the range of concentration *in the stack* that generates full-scale output from the analytical system.

5.4 Twenty-Four-Hour Zero Drift

Using the zero readings from Section 4.4, the differences between the zero reading after adjustment and the zero reading 24 hours later, just prior to zero adjustment, will be calculated for each set of data, for each analytical system. Using these data, the mean value and the 95% confidence interval will be calculated for each analytical system. The sum of the absolute mean value plus the 95% confidence interval will be reported, as a percentage of the full-scale concentration range, for each analytical system.

5.5 Two-Hour Calibration Drift

Using the calibration readings from Section 4.3, the differences between the readings and the test gas value will be calculated. These values will be corrected for the corresponding zero drift during the 2-hour

period. The mean and the 95% confidence interval of these corrected values will be calculated and the sum of the absolute mean value plus the 95% confidence interval will be reported, as a percentage of the full-scale concentration range, for each analytical system.

5.6 Twenty-Four-Hour Calibration Drift

Using the calibration readings from Section 4.4, the differences between the readings and the test gas will be calculated. These values will be corrected for the corresponding zero drift during the 24-hour period. The mean and the 95% confidence interval of these corrected values will be calculated and the sum of the absolute mean value plus the 95% confidence interval will be reported, as a percentage of the full-scale concentration range, for each analytical system.

5.7 Response Time

Using the data from Section 4.5, the time intervals from concentration switching to 95% of the final stable values for all upscale and downscale tests will be calculated. The mean of the three upscale test times and the mean of the three downscale test times will be calculated. The slower of the two times will be reported for each analytical system.

5.8 Operational Period

From the maintenance logs kept on the analytical systems, it will be determined how long each system operated without requiring corrective maintenance, repair, replacement, or adjustment other than that specified in the respective instruction manuals, as routine and expected in a 1-week period. From the rest of the data, these operating periods will be corrected downward, if necessary, to the period within which each system displayed no more than the following drift or error for any one parameter:

a.	Relative Accuracy	20% of mean reference value
b.	2-Hour Zero Drift	2% of full scale
c.	24-Hour Zero Drift	4% of full scale
d.	2-Hour Calibration Drift	2% of full scale
e.	24-Hour Calibration Drift	5% of full scale

The Disc Diluter System will not be judged in this manner since it is not intended to be used for continuous monitoring. Instead, its detailed maintenance log will be reproduced in full in the report.

6.0 CALCULATIONS

6.1 Calculating Mean Values

The mean value of a data set is calculated according to equation (E-1)

$$\bar{x} = \frac{1}{n} \sum_{i=1}^{n} x_i \qquad \text{(E-1)}$$

where x_i = individual values

$\bar{x}$ = mean value

n = number of data points

Σ = sum of the individual values

6.2 Calculating 95% Confidence Intervals

The 95% confidence interval (two-sided) is calculated according to equation (E-2).

$$C.I._{95} = \frac{t_{1-\alpha/2}}{\sqrt{n}} \sqrt{\frac{n(\Sigma x_i^2) - (\Sigma x_i)^2}{n(n-1)}} \qquad \text{(E-2)}$$

where

Σx_i = sum of all data points

$\sqrt{n}$ = square root of the number of data points

$t_{1-\alpha/2}$ = $t_{.975}$ for n samples from a table of percentages of the t distribution

$C.I._{95}$ = 95% confidence interval estimate of the average mean value

Typical Values for $t_{1-\alpha/2}$

n	$t_{.975}$	n	$t_{.975}$	n	$t_{.975}$
2	12.706	7	2.447	12	2.201
3	4.303	8	2.365	13	2.179
4	3.182	9	2.306	14	2.160
5	2.776	10	2.262	15	2.145
6	2.571	11	2.228	16	2.131

The values in this table are already corrected for n-1 degrees of freedom. Use n *equal to the number of samples as data points.*

7.0 DATA ACQUISITION SYSTEM

7.1 Analog Recorders (Strip Chart)

Analog recorders (Beckman supplied) shall be used to record the output of each monitor. The recorders shall be connected directly to the basic analyzer output before the auto zero and calibration module to provide a continuous direct recording of the output of each monitor. Appropriate hand-written notes shall be made directly upon the recorder charts to provide a permanent record of the test results.

While not contractually required, such real-time records of monitor performance will be used as aids to test personnel. Additionally, all required test data will be available on the permanent records, providing immediate visual assurance that significant results are being obtained and/or immediate indication of failure of one or more systems. To the maximum extent allowed by availability of test equipment, significant parameters such as ambient temperature and stack gas temperature will be monitored and recorded on strip-chart recorders when and as necessary or relevant.

7.2 Digital Data Acquisition

An Esterline-Angus Model D2020 and teletype (both GFE) shall be employed to provide periodic typed outputs for all analog data channels. In addition, the teletype shall be used to generate a punched tape of all data output by the Model D2020. The punched tape will be suitable for use in computer data analysis. Data shall be acquired at 1-minute intervals while collecting samples for Method 6 analysis, at 2-hour intervals for zero and calibration 2-hour drift analysis, and at 1-hour intervals for the overall 30-day test.

As a minimum, all monitor outputs (direct), and all monitor outputs from the auto zero-cal module shall be connected to the Model D2020 for tele-

type printout and for punched-tape recording. In addition, the Model D2020 automatically provides the time at which the data are obtained with 1-minute resolution. Since the stack gas temperature directly affects the dilution ratio of the Disc Diluter, a stack temperature monitor will be provided by Beckman to provide a stack gas temperature input to the Model D2020 and on the punched tape.

To the maximum extent possible such parameters as ambient temperature shall also be recorded on the teletype print-out and on the punched tape. At the option of the test personnel, for example, the stack gas temperature may be removed from the stack and utilized in monitoring the temperature of heat traced sample lines.

The objectives of data acquisition shall be as follows:

1. To obtain all necessary data required to fulfill the requirements of Sections 2.0 through 6.0 and 9.0 of this Work Plan as a first priority, and
2. To fully utilize on-site time and available equipment to obtain maximum information relevant to the accomplishment of the first objective. In this regard, the field test personnel shall have broad latitude with respect to objective 2.

Finally, the raw data obtained using EPA Compliance Test Method 6 shall be manually entered on the punched tape through the teletype to facilitate computer analysis of all data. The entry procedure will be added to the modified test protocol as the final step, which will include an identifying code followed by date, time of day, and the necessary data.

8.0 DATA ANALYSIS

8.1 Analysis of Data from Strip Chart Recorders

Sections 2.0 through 6.0 of this Work Plan can be accomplished with analog strip-chart recordings of the relevant data coupled with manual data reduction. Since such recordings are the normal data output for source pollution monitoring systems, this method of analysis shall be considered acceptable for the first priority objective of this test program. Accordingly, at least preliminary data analysis after each Method 6 test shall be performed as soon as possible using the analog strip-chart recordings to ensure that meaningful results were obtained. Within the constraints of time, test personnel shall have the option of repeating any tests for which such preliminary analyses indicate a radical deviation between instrumental and Method 6 results which might indicate a gross error in procedure or technique.

8.2 Analysis of Data by Computer Technique

The secondary objective of this program can best be accomplished by acquisition of all raw data on a punched tape suitable for analysis by a digital computer. Once all relevant data are on punched tape, the possibilities of sophisticated data analysis are limited only by available funding. In this regard, the recording of ambient temperature and critical monitor temperatures would even permit analysis of thermal errors for each monitor tested. As noted above, all relevant data beyond the contractual scope of this program shall be recorded on punched tape within the limits of equipment availability and test personnel time. This will permit subsequent extensive data analysis by the EPA as desired. This Work Plan, however, is restricted to analysis by computer programming as defined in the following paragraph

A computer program capable of performing the data analysis required by Sections 5.1 through 5.6 and 6.1 through 6.2 shall be prepared and

functionally tested prior to commencement of field testing in accordance with this Work Plan. In addition, the computer program shall provide for calculation of daily average SO_2 concentrations for each monitor (based upon data acquired every hour) for the entire thirty-day test period. The punched-tape data accumulated after start-up shall be analyzed as soon as possible to ensure that the system is functioning properly. At the conclusion of each set of nine (9) Method 6 tests, the punched-tape data shall be computer analyzed to provide the data required by Sections 5.1 through 5.8 and 6.1 through 6.2 of this Work Plan.

8.3 Final Report Data Analysis

At the option of the Beckman Program Manager, the final report shall contain either or both data analyzed by manual techniques and data analyzed by computer techniques.

9.0 SCHEDULE AND MAN LOADING

The field work is expected to require 7 weeks after the site is fully prepared to accept the analytical systems and all equipment has been delivered to the site. The following schedule indicates the expected step-wise performance of the tasks and the man loading to perform them:

Nov. 11-15

Install and start up all analytical systems; all but Disc Diluter start continuous operation by Nov. 15.

Tech. - 5 days; one A.E. - 5 days; other A.E. - last 3 days

Nov. 18

Set up chemical lab. and run one Method 6, not necessarily correlated with analytical systems.

Tech. - 1 day; A.E. - 1 day; Scientist- 1 day

Nov. 19

Run 1 Method 6 correlated with all systems except Disc Diluter, and 1 Method 6 correlated with all 4 systems.

Same man loading as Nov. 18

Nov. 20

Run 2 Method 6's correlated with all systems; Disc Diluter starts continuous operation.

Same man loading as Nov. 19

Nov. 21

Reduce data obtained so far.

Same man loading as Nov. 20

Nov. 22

Start 30 day run.

Same man loading as Nov. 21

Nov. 25-28

Run 2 Method 6's per day correlated with all 4 systems, if possible, plus 2 Method 4's per day.

Tech. - 4 days; A.E. - 4 days

Nov. 29

Run 1 Method 6 correlated with all 4 systems, if possible, plus 1 Method 4.

Tech. - 1 day; A.E. - 1 day

Dec. 2

Check all analytical and data acquisition systems for proper operation.

Tech. - 1 day; A.E. - 1 day; Scientist - 1 day

Dec. 3

Start 2-hour zero and calibration tests.

Same man loading as Dec. 2

Dec. 4

Complete 2-hour zero and calibration tests.

Tech - 1 day; A.E. - 1 day

Dec. 5

Run response tests.

Same man loading as Dec. 4

Dec. 6

Continue 30-day run.

Same man loading as Dec. 5

Dec. 9-12

Run 2 Method 6's correlated with all 4 systems plus 2 Method 4's each day.

Tech. - 4 days; A.E. - 4 days

Dec. 13

Run 1 Method 6 correlated with all 4 systems plus 1 Method 4. Reduce week's data.

Tech. - 1 day; Scientist - 1 day; A.E. - 1 day

Dec. 16-19

Same as Dec. 9-12.

Tech - 4 days; A.E. - 4 days

Dec. 20

Run 1 Method 6 correlated with all 4 systems plus 1 Method 4.

Tech. - 1 day; Scientist - 1 day; A.E. - 1 day

Dec. 23-24

End of 30 day run. Shut down all systems.

Tech. - 2 days; A.E. - 2 days

Jan 6-10

Remove equipment and restore site.

Tech. - 5 days; A.E. - 5 days

December 6, 1974

(Revised and abridged June 25, 1975,
for inclusion in Final Report)

REVISED WORK PLAN FOR FIELD TESTS AT POWER PLANT

1.0 FACTORS NECESSITATING REVISION

Because of numerous equipment failures in the initial two weeks of effort at the Power Plant Test Site, it was necessary to revise the Work Plan to ensure completion of the evaluation within available funding. Failures of both the digital and analog data acquisition systems have occurred. Both are now operational, but it was necessary to adhere to the formal test schedule as long as either system was operational. Effort toward development of the computer program for computer reduction of punched paper-tape data was terminated because the equipment reliability problem made the cost unjustifiable. Punched tape was generated for possible future use to the extent that it entailed no cost impact. Emphasis was placed upon the acquisition of data for manual reduction, and upon adherence to the revised Detailed Daily Schedule. Further equipment failures necessitated termination of testing of the related system, rather than delaying the schedule.

2.0 SPECIFIC REVISIONS

The following items are deleted from the original Work Plan:

- Last paragraph of Section 7.2
- Section 8.2
- Section 9.0

Section 9.0 of the original Work Plan is replaced by the Detailed Daily Schedule of this revision to the Work Plan for the Power Plant Test Site.

REVISED FIELD TEST PLAN FOR POWER PLANT

DETAILED DAILY SCHEDULE

Day	Date (Dec)	Time (Hr:Min)	Step No.	Activity
0	8	NA	NA	Run speed of response tests on all instruments. Run three Method 6 tests on span gas.
1	9	0:00	1	Run zero and span calibrations on all instruments. Then set all sample handling systems to "SAMPLE" mode and data logger to internal timer set for one scan every two minutes.
		0:15	2	Acquire two manual samples for Method 6 analyses, collected in sequence.
		2:00	3	Repeat step 1
		2:15	4	Repeat step 2
		4:00	5	Repeat step 1
		4:15	6	Repeat step 2
		6:00	7	Repeat step 1
		6:15	8	Repeat step 2
		8:00	9	Repeat step 1, except set data logger for internal one-hour scan (or to external timer set for one scan every 48 minutes if system remains operational).
		8:15	10	Acquire a manual sample for Method 4 analysis.
2	10	0:00	1	Repeat step 9 of Day 1.
		2:00	2	Repeat step 1
		4:00	3	Repeat step 1
		6:00	4	Repeat step 1
		8:00	5	Repeat step 1
		8:15	6	Repeat step 10 of Day 1.
		All Day	7	Analyze all manual samples taken on Day 1.
3	11	All Day	NA	Repeat all steps of Day 1.
4	12	All Day	NA	Repeat all steps of Day 2.

REVISED FIELD TEST PLAN FOR POWER PLANT (Continued)

DETAILED DAILY SCHEDULE

Day	Date (Dec)	Time (Hr:Min)	Step No.	Activity
5	13	0:00	1	Repeat step 1 of Day 1.
		0:15	2	Repeat step 2 of Day 1.
		2:00	3	Repeat step 9 of Day 1.
		2:15	4	Repeat step 10 of Day 1.
		Remainder of Day	5	Analyze manual samples taken this day. Maintain/repair equipment as time and material permit.
6	14	0:00	1	Repeat step 9 of Day 1.
7	15	0:00	1	Repeat step 9 of Day 1.
8 thru 14	16-22	NA	NA	Repeat all steps of Day 1 through Day 7.

Instrument Systems to be Utilized

1. Dynasciences Model SS-330 with the conventional (refrigerated) sampling system.
2. Dynasciences Model SS-310 and the Meloy Analyzer with the Meloy Dyfusatron Sampling System.
3. Beckman Model 865 NDIR with the reflux sampling Probe and Permeation Dryer Sampling System.

NOTE

Manual samples have been increased from 27 (18 samples correlated) to 36 samples all correlated.

March 28, 1975

(Revised and abridged June 25, 1975,
for inclusion in Final Report)

REVISED FIELD TEST PLAN FOR CLAUS PLANT
(Supercedes Original Plan Entirely)

1.0 SITE DESCRIPTION

The Claus Unit that will be used for these tests has a typical, unmodified incinerator. The gases entering the incinerator contain approximately 0.2 to 0.5 percent hydrogen sulfide and 0.1 to 0.25 percent sulfur dioxide plus total $S_2 + S_4 + S_6$ up to 1 percent, at a termperature of about 148.8° F (300° F) and atmospheric pressure. The exit gases are at about 537.7° C (1000° F) and 248 pascals (1 inch water) vacuum.

2.0 SAMPLING-INTERFACE-MONITORING SYSTEMS

2.1 Incinerator Inlet

The following system will be used on the incinerator inlet stream:

Houston Atlas H_2S Analyzer with sample dilution unit for 0 - 1% range and a conventional sampling system designed specifically for this stream.

2.2 Incinerator Outlet

The following three systems will be used on the incinerator outlet:

- Beckman Reflux Sampling Probe and Permeation Dryer with Beckman NDIR SO_2 Analyzer.
- Meloy Total Sulfur Analyzer and the Dynasciences Model SS-310 with a Meloy Dyfusatron Sample Diluter.

2.3 Analytical System Operation and Maintenance

The system identified in Paragraph 2.1 will be operated continuously for ten days on the incinerator inlet and the systems identified in Paragraph 2.2 will be operated continuously for ten days on the incinerator outlet. During the operating period, all systems will be zeroed and spanned on a 24-hour basis. Refer to the Detailed Daily Schedule of this Work Plan for details.

Reasonable, normal maintenance will be performed. However, a major breakdown in any of the analytical systems, requiring extensive field or factory service or repair will require cessation of testing of that particular system.

3.0 DATA TO BE ACQUIRED

3.1 Relative Accuracy after Incinerator (SO_2)

Thirty-seven manual samples will be taken for analysis by the wet chemical Method 6. Simultaneous output signal recordings will be obtained with all analytical systems during all of the manual samplings. The zero and span readings will be checked on all analytical systems before taking manual samples.

3.2 Twenty-Four-Hour Zero and Span Drift

Readings will be obtained on the analytical systems for zero and calibration gases at 24-hour intervals throughout the test period.

3.3 Two-Hour Zero and Span Drift

Readings will be obtained on the analytical systems for zero and calibration gases at two-hour intervals during the periods of manual sampling.

3.4 Operational Period

Detailed maintenance logs will be kept for each analytical system.

4.0 DATA ANALYSIS AND REPORTING

4.1 Relative Accuracy

This calculation is as described in the "Work Plan for Field Tests at Power Plant."

4.2 Twenty-Four-Hour Zero and Span Drifts

These calculations will also be as described in the "Work Plan for Field Tests at Power Plant."

4.3 Two-Hour Zero and Span Drifts

These calculations will also be as described in the "Work Plan for Field Tests at Power Plant."

5.0 CALCULATIONS

Calculation of mean values and 95% confidence intervals will be performed as described in the "Work Plan for Field Tests at Power Plant."

6.0 DATA ACQUISITION SYSTEM

Data acquisition will be performed by the same system as used at the Power Plant.

7.0 DATA ANALYSIS

Data analysis will be performed in the same manner as at the Power Plant. The Final Report will contain either or both data analyzed by manual techniques and data analyzed by computer techniques, at the option of the Beckman Program Manager.

REVISED FIELD TEST PLAN FOR CLAUS PLANT

DETAILED DAILY SCHEDULE

Day	Time Period	Activity
0	0800-0830	Calibrate all instruments.
		Set data logger to one-hour cycle.
	NA	Run Method 4 on incinerator outlet.
1	0800-0830	Run zero and span gases on all instruments.
		Set data logger to one-minute cycle.
	0845-0900	Take manual sample for Method 6 on incinerator outlet.
		Set data logger to one-hour cycle.
		Analyze samples by Method 6.
	1000-1030	Run zero and span gases.
		Set data logger to one minute.
	1030-1045	Take sample for Method 6.
		Set data logger to one hour.
	NA	Analyze samples by Method 6.
	1200-1230	Run zero and span gases.
		Lunch
	1400-1430	Run zero and span gases.
		Set data logger to one minute.
	1445-1500	Take sample for Method 6.
		Set data logger to one hour.
	NA	Analyze samples by Method 6.
	1600-1630	Run zero and span gases.
		Set data logger to one minute.
	1630-1645	Take sample for Method 6.
	1700	Set data logger to one hour.
	NA	Analyze samples by Method 6.
	1800-1830	Run zero and span gases.
		Set data logger to one minute.
	1830-1845	Take sample for Method 6.
	1845-1900	Set data logger to one hour.
	NA	Analyze samples by Method 6.
	2000-2030	Run zero and span gases.
		Run Method 4.
2-5		Identical to Day 1.
6	0800-0830	Run zero and span gases.
7	0800-0830	Run zero and span gases.
8	0800-0830	Run zero and span gases.
		Set data logger to one minute.

REVISED FIELD TEST PLAN FOR CLAUS PLANT (Continued)

DETAILED DAILY SCHEDULE

Day	Time Period	Activity
	0830-0845	Take sample for Method 6 on outlet. Set data logger to one hour.
	NA	Analyze sample.
	1000-1030	Run zero and span gases. Set data logger to one minute.
	1030-1045	Take sample for Method 6. Set data logger to one hour.
	NA	Analyze sample.
	1200-1230	Run zero and span gases. Run Method 4.
		Lunch.
	1400-1430	Run zero and span gases. Set data logger to one minute.
	1430-1445	Take sample for Method 6. Set data logger to one hour.
	NA	Analyze sample.
	1600-1630	Run zero and span gases. Set data logger to one minute.
	1630-1645	Take sample for Method 6. Set data logger to one hour.
	NA	Analyze sample.
	1800-1830	Run zero and span gases. Run Method 4.
9,10		Identical to Day 8.
11	0800-0830	Run zero and span gases.

The plan described above will produce the following:

- Eleven days continuous operation
- Eleven 24-hour zero and calibration drift checks
- Forty-five 2-hour zero and calibration drift checks
- Thirty-seven Method 6 analyses on incinerator outlet
- Twelve Method 4 analyses on incinerator outlet

APPENDIX B

EPA DOCUMENTS USED IN DESIGN OF FIELD WORK PLANS

CONTENTS

Page

1. Performance Specifications for Stationary-Source Monitoring System for Gases and Visible Emissions, EPA-650/2-74-013, January 1974, Appendix E, pp 49-60 . . . 113

2. *Federal Register,* Environmental Protection Agency, Stationary Sources, "Proposed Emission Monitoring and Performance Testing Requirement" Volume 39, No. 177, Part II, pp 32864-32871.. 126

EPA-650/2-74-013

PERFORMANCE SPECIFICATIONS FOR STATIONARY-SOURCE MONITORING SYSTEMS FOR GASES AND VISIBLE EMISSIONS

by

John S. Nader, Fredric Jaye,
and William Conner

Chemistry and Physics Laboratory

Program Element No. 1AA010

U.S. ENVIRONMENTAL PROTECTION AGENCY
National Environmental Research Center
Research Triangle Park, N. C. 27711

January 1974

APPENDIX E.
EXAMPLE:
PERFORMANCE SPECIFICATIONS AND SPECIFICATION TEST PROCEDURES FOR MONITORS OF POLLUTANT GAS EMISSIONS FROM STATIONARY SOURCES

Performance specifications for continuous measurement systems for pollutant gases are given in terms of critical operating parameters. Test procedures are given to test the capability of the measurement systems to conform to the performance specifications.

1. Principle and Applicability

   1.1 Principle - Pollutant gases are sampled continuously in the stack emissions, and the gas concentration is analyzed continuously as a function of time. Sampling may include either the extractive or non-extractive (in-situ) approach.

   1.2 Applicability - The performance specifications are given for continuous pollutant gas measurement systems applied to specific source-pollutant combinations. The following discussion is addressed to SO_2 and NO_x emissions from coal-burning power plants. Instrument system should be capable of operation within performance specifications at particulate loadings and in a temperature range corresponding to those of the environment of the installation.

2. Apparatus

   2.1 Calibration Gas Mixture - Mixture of a known concentration of the pollutant gas in oxygen-free nitrogen.

Nominal concentrations of 30 percent, 60 percent, and 90 percent of span are recommended. It is strongly recommended that the gas mixture be analyzed by a reference method prior to use.

2.2 Zero Gas - A gas containing no more than 1 ppm of the pollutant gas.

2.3 Equipment for measurement of pollutant gas concentration using the reference method.

2.4 Strip Chart Recorder - Analog strip chart recorder, input voltage range compatible with analyzer system output, full scale (per travel) in two seconds or less.

2.5 Continuous measurement system for pollutant gas.

3. Definitions

3.1 Measurement System - The total equipment required for the determination of a pollutant gas concentration in a given source effluent. The system consists of three major subsystems:

1. Sampling Interface - That portion of the measurement system that performs one or more of the following operations: delineation, acquisition, transportation, and conditioning of a sample of the source effluent or protection of the analyzer from the hostile aspects of the sample or source environment.
2. Analyzer - That portion of the system which senses the pollutant gas and generates a signal output that is a function of the pollutant concentration.

3. Data Presentation - That portion of the measurement system that provides a display of the output signal in terms of concentration units.

3.2 Span - The value of pollutant concentration at which the measurement system is set to produce the maximum data display output. For the purposes of this method, the span shall be set at a pollutant gas concentration of 1.5 times the emission standard or the pollutant gas concentration of interest.

3.3 Accuracy (Relative) - The degree of correctness with which the measurement system yields the value of gas concentration of a sample relative to the value given by a defined reference method. This accuracy is expressed in terms of error which is the difference between the paired concentration measurements. The error is expressed as a percentage of the reference mean value.

3.4 Calibration Error - The difference between the pollutant concentration indicated by the measurement system and the known concentration of the test gas mixture.

3.5 Zero Drift - The change in measurement system output over a stated period of time of normal continuous operation when the pollutant concentration at the time of the measurements is zero.

3.6 Calibration Drift - The change in measurement system output over a stated period of time of normal continuous operation when the pollutant concentration at

the time of the measurements is the same known upscale value.

3.7 Repeatability - A measure of the measurement system's ability to give the same output reading(s) upon repeated measurements of the same pollutant concentration(s).

3.8 Response Time - The time interval from a step change in pollutant concentration at the input to the measurement system to the time at which 95 percent of the corresponding final value is reached as display on the measurement system data presentation device.

3.9 Operational Period - A minimum period of time over which a measurement system is expected to operate within certain performance specifications without unscheduled maintenance, repair or adjustment.

4. Measurement System Performance Specifications

The following performance specifications shall be met in order that a measurement system shall be considered acceptable under this method.

Parameter	Specification
a. Accuracy (relative)	≤ 20% of mean reference value
b. Calibration Error	≤ 5% of each test gas value*
c. Zero Drift (2 hour)	≤ 2% of emission standard*
d. Zero Drift (24 hour)	≤ 4% of emission standard*

*Absolute mean value + percent confidence interval.

Parameter	Specification
e. Calibration Drift (2 hour)	< 2% of emission standard*
f. Calibration Drift (24 hour)	≤ 5% of emission standard*
g. Response Time	10 minutes (maximum)
h. Operational Period	168 hours

*Absolute mean value + 95% confidence interval.

5. Specification Test Procedures

5.1 Calibration Error and Repeatability Test - Set up and calibrate the complete measurement system according to the manufacturer's written instructions. Record the readings of calibration gas concentrations of approximately 30, 60, and 90 percent of span. Make a series of five nonconsecutive readings at each concentration (Example: 30 percent, 90 percent, 60 percent 90 percent, 30 percent, 90 percent, 60 percent, etc.) Convert the measurement system output readings to ppm.

5.2 Field test for accuracy (relative), zero drift, calibration drift, and operation period.

5.2.1 Set up and operate the measurement system in accordance with the manufacturer's written instructions and drawings. Operate the system for an initial 168 hour conditioning period. During this period the system should measure the pollutant gas content of the effluent in a normal operational manner.

5.2.2 After completion of this conditioning period, the formal 168 hour performance and operation test period shall begin. The system shall be monitoring the source effluent at all times when not being zeroed, calibrated, or

backpurged. During this 168 hour test period, make a minimum of nine (9) pollutant gas concentration measurements using the reference method at intervals of not less than 1 hour. For SO_2, each of the nine tests shall consist of a Method 6 SO_2 concentration measurement, plus the instrumental measurement. For NO_x, each of the nine tests shall consist of a set of three Method 7 NO_x concentration measurements, plus the instrumental measurement. In each set of three Method 7 measurements, three samples should be taken concurrently or within a 3-minute interval. The sampling location for the reference method shall be as prescribed. The sampling location for the monitoring method shall be as close to the location of the reference method sampling point as conditions will permit to demonstrate the specified accuracy. The reference method data shall be compared with simultaneously collected monitoring data for calculation of accuracy. Before and after each reference method test, record the values given by both zero and calibration concentrations. Record the values given by zero and calibration concentrations at two hour intervals until 15 sets of data are obtained. This two-hour period need not be consecutive but may not overlap. Zero and calibration corrections and adjustments are allowed only at 24 hour intervals or at such shorter intervals as the manufacturer's written instructions specify. Automatic corrections made by the measurement system without operator intervention or

initiation are allowable at any time. During the entire test period, record the values given by zero and calibration pollutant gas concentrations before and after adjustment at 24 hour intervals. Calibration checks are made with one test gas concentration between 70 and 90 percent of span.

5.3 Field Test for Reponse Time

5.3.1 This test shall be accomplished using the entire measurement system as installed including sample transport lines if used. Flow rates, line diameters, pumping rates, pressures, etc., shall be at the nominal values for normal operation as specified in the manufacturer's written instructions. In the case of cyclic analyzers, the response time test shall include one cycle. This test shall be repeated for each sampling point of multi-sampling point systems.

5.3.2 Introduce a zero concentration of pollutant gas into the measurement system sampling interface or as close to the sampling interface as possible. When the system output reading has stabilized, switch quickly to a known concentration pollutant gas at 70 to 90 percent of span. Record the time from concentration switching to final stable response. After the system response has stabilized at the upper level, switch quickly to a zero concentration of pollutant gas. Record the time from concentration switching to

final stable response; perform this test sequence three (3) times. The strip chart recorder charts or copies of them from this test should be included in the data submission with time scales and up and down scale values clearly marked.

6. Calculation, Data Analysis and Reporting

6.1 Procedure for Determination of Mean Values and Confidence Intervals

6.1.1 The mean value of a data set is calculated according to equation E-1.

$$\bar{x} = \frac{i}{n} \sum_{i=1}^{n} x_i \qquad \text{Equation E-1}$$

where x_i = individual values

$\bar{x}$ = mean value

n = number of data points

Σ = sum of the individual values

6.1.2 The 95% confidence interval (two-sided) is calculated according to equation E-2.

$$C.I._{95} = \frac{t_{1-\alpha/2}}{\sqrt{n}} \sqrt{\frac{n(\Sigma x_i^2) - (\Sigma x_i)^2}{n(n-1)}} \qquad \text{Equation E-2}$$

where Σx_i = sum of all data points

$\sqrt{n}$ = square root of the number of data points

$t_{1-\alpha/2} = t_{.975}$ for n samples from a table of percentages of the t distribution.

$C.I._{95}$ = 95% confidence interval estimate of the average mean value.

Typical Values for $t_{1 - \alpha/2}$

n	$t_{.975}$	n	$t_{.975}$	n	$t_{.975}$
2	12.706	7	2.447	12	2.201
3	4.303	8	2.365	13	2.179
4	3.182	9	2.306	14	2.160
5	2.776	10	2.262	15	2.145
6	2.571	11	2.228	16	2.131

The values in this table are already corrected for n-1 degrees of freedom. Use n equal to the number of samples as data points.

6.2 Data Analysis and Reporting

6.2.1 Accuracy (relative) - This calculation uses the reference method test data and the measurement system concentrations recorded at the times the reference method tests were run. Subtract the reference method test concentration from the measurement system concentration.* Repeat for all nine test pairs. Using this data, compute the mean difference and the 95% confidence interval using Equations E-1 and E-2. Report the sum of the absolute mean value and the 95% confidence interval as a percentage of the mean reference value.

6.2.2 Calibration Error - Using the data from Section 5.1 subtract the known value from the value shown by the measurement system for each of the 5 readings at each span test concentration. Calculate the mean of these differences values and the 95% confidence interval according to Equations E-1 and E-2. Report the sum of the absolute mean value and the 95% confidence interval as a percentage of test gas concentration.

---

*For SO_2, subtract the Method 6 values from the corresponding instrumental value. For NO_x, subtract the mean value of the set of three Method 7 values from the corresponding instrumental values.

6.2.3 Zero Drift (2 Hour) - Using the zero concentration values measured during the field test, calculate the mean value and the confidence interval using Equations E-1 and E-2. Report the sum of the absolute mean value and the confidence interval as a percentage of the emission standard.

6.2.4 Zero Drift - (24 Hour) - Using the zero concentration values measured every 24 hours during the field test, calculate the differences between the zero point after zero adjustment and the zero value 24 hours later just prior to zero adjustment. Calibrate the mean value of these points and the confidence interval using Equations E-1 and E-2. Report the sum of the absolute mean value and confidence interval as a percentage of the emission standard.

6.2.5 Calibration Drift (2 Hour) - Using the calibration values obtained at two-hour intervals during the field test, calculate the differences between the readings and the test gas value. These values should be corrected for the corresponding zero drift during that two-hour period. Calculate the mean and confidence interval of these corrected values using Equations E-1 and E-2. Report the sum of the absolute mean value and confidence interval as a percentage of the emission standard.

6.2.6 Calibration Drift (24 Hour) - Using the calibration values measured every 24 hours during the field test, calculate the differences between the calibration concentration reading after zero and calibration adjustment and the calibration

concentration reading 24 hours later after zero adjustment but before calibration adjustment. Calculate the mean value of these differences and the confidence interval using Equations E-1 and E-2. Report sum of the absolute mean value and confidence interval as a percentage of the emission standard.

6.2.7 Response Time - Using the charts from Section 5.3 calculate the time interval from concentration switching to 95% of the final stable value for all up scale and down scale tests. Report the mean of the three up scale test times and the mean of the three down scale test times. The two average times should not differ by more than 15% of the slower time. Report the slower time as the system response time.

6.2.8 Operational Period - During the 168 hour performance and operational test period, the measurement system shall not require any corrective maintenance or repair or replacement or adjustment other than that clearly specified as required in the operation and maintenance manuals as routine and expected during a one-week period. If the measurement system operates within the specified performance parameters and does not require corrective maintenance, repair, replacement or adjustment other than specified above, during the 168 hour test period, the operational period test will be successfully concluded. Failure of the measurement to meet this requirement shall call for repetition of the 168 hour test period. Portions of the test which were satisfactorily completed need not be repeated. Failure to meet any performance specifications shall call for a repetition of the one

week performance test period and that portion of the testing which is related to the failed specification. All maintenance and adjustments required shall be recorded. Output readings shall be recorded before and after all adjustments.

7. Supplemental References

Experimental Statistics, National Bureau of Standards, Handbook 91, 1963, P. 3-31, Paragraph 3-3.1.4.

federal register

WEDNESDAY, SEPTEMBER 11, 1974

WASHINGTON, D.C.

Volume 39 ■ Number 177

PART II

ENVIRONMENTAL PROTECTION AGENCY

■

STATIONARY SOURCES

Proposed Emission Monitoring and Performance Testing Requirements

Date of Test _____

Span Filter _____ % Opacity

Analyzer Span Setting _____ % Opacity

Upscale	1 _____	seconds
	2 _____	seconds
	3 _____	seconds
Downscale	1 _____	seconds
	2 _____	seconds
	3 _____	seconds

Average response _____ seconds

Figure 1-2. Response Time Test

Zero Setting _____ (See paragraph 8.2.1)

Span Setting _____

Date and Time	Zero Reading (Before cleaning and adjustment)	Zero Drift (ΔZero)	Span Reading (After cleaning and zero adjustment but before span adjustment)	Calibration Drift (ΔSpan)

Zero Drift = [Mean Zero Drift* _____ + CI (Zero) _____ ÷ Emission Standard] x 100 = _____.

Calibration Drift = [Mean Span Drift* _____ + CI (Span) _____ ÷ Emission Standard] x 100 = _____.

*Absolute value

Figure 1-3. Zero and Calibration Drift Test

PERFORMANCE SPECIFICATION 2—PERFORMANCE SPECIFICATIONS AND SPECIFICATION TEST PROCEDURES FOR MONITORS OF SO_2 AND NO_x FROM STATIONARY SOURCES

1. *Principle and Applicability.*

1.1 Principle. Gases are continuously sampled in the stack emissions and analyzed for either sulfur dioxide or oxides of nitrogen by a continuously operating emission measurement system. Sampling may include either the extractive or non-extractive (*in situ*) approach.

1.2 Applicability. This method is applicable to the instrument systems specified by subparts for continuously monitoring oxides of nitrogen and sulfur dioxide emissions. Specifications for continuous measurement of nitrogen oxides or sulfur dioxide are given in terms of performance specifications. Test procedures are given to determine the capability of the measurement systems to conform to the performance specifications prior to approving the systems installed by an affected facility.

2. *Apparatus.*

2.1 Calibration Gas Mixture. Mixture of a known concentration of pollutant gas in oxygen-free nitrogen. Nominal concentrations of 50 percent and 90 percent of span are recommended. The 90 percent gas mixture is to be used to set and to check the span and is referred to as the span gas. The gas mixtures shall be analyzed by the applicable reference method (See 5.1.1) within 2 weeks prior to use, or demonstrated to be accurate and stable by an alternate method subject to approval of the Administrator.

2.2 Zero Gas. A gas containing less than 1 ppm of the pollutant gas.

2.3 Equipment for measurement of the pollutant gas concentration using the reference method specified in the applicable standard.

2.4 Chart Recorder. Analog chart recorder, input voltage range compatible with analyzer system output.

2.5 Continuous measurement system for SO_2 or NO_x pollutants as applicable.

3. *Definitions.*

3.1 Measurement System. The total equipment required for the determination of a pollutant gas concentration in a given source effluent. The system consists of three major subsystems:

3.1.1 Sampling Interface—That portion of the measurement system that performs one or more of the following operations: delineation, acquisition; transportation, and conditioning of a sample of the source effluent or protection of the analyzer from the hostile aspects of the sample or source environment.

3.1.2 Analyzer—That portion of the measurement system which senses the pollutant gas and generates a signal output that is a function of the pollutant concentration.

3.1.3 Data Recorder—That portion of the measurement system that provides a permanent record of the output signal in terms of concentration units.

3.2 Span. The value of pollutant concentration at which the measurement system is set to produce the maximum data display output. For the purposes of this method, the span shall be set at a sulfur dioxide or nitrogen dioxide concentration equivalent to 1.5 times the relevant emission standard.

3.3 Accuracy (Relative). The degree of correctness with which the measurement system yields the value of gas concentration of a sample relative to the value given by a defined reference method. This accuracy is expressed in terms of error, which is the difference between the paired concentration measurements expressed as a percentage of the mean reference value.

3.4 Calibration Error. The difference between the pollutant concentration indicated by the measurement system and the known concentration of the test gas mixture.

3.5 Zero Drift. The change in measurement system output over a stated period of time of normal continuous operation when the pollutant concentration at the time for the measurements is zero.

3.6 Calibration Drift. The change in measurement system output over a stated period time of normal continuous operation when the pollutant concentration at the time of the measurements is the same known upscale value.

3.7. Response Time. The time interval from a step change in pollutant concentration at the input to the measurement system to the time at which 95 percent of the corresponding final value is reached as displayed on the measurement system data presentation device.

3.8 Operational Period. A minimum period of time over which a measurement system is expected to operate within certain performance specifications without unscheduled maintenance, repair or adjustment.

4. *Measurement System Performance Specifications.*

A measurement system must meet the performance specifications in Table 2-1 to be considered acceptable under this method.

TABLE 2-1.—PERFORMANCE SPECIFICATIONS

Parameter	Specification
1. Accuracy*	≤20% of reference mean value.
2. Calibration error*	≤5% of each (50%, 90%) calibration gas mixture value.
3. Zero drift (2 hours)*	≤2% of emission standard.
4. Zero drift (24-hour)*	≤4% of emission standard.
5. Calibration drift (2 hours)*	≤2% of emission standard.
6. Calibration drift (24-hour)*	≤5% of emission standard.
7. Response time	15 minutes maximum.
8. Operational period	168 hours minimum.

*Expressed as sum of absolute mean value plus 95 percent confidence interval of a series of tests.

5. *Performance Specification Test Procedures.* The following test procedures shall be used to determine conformance with the requirements of paragraph 4:

5.1 Calibration test.

5.1.1 Analyze each calibration gas mixture (50%, 90%) using reference methods 6 for sulfur dioxide and 7 for oxides of nitrogen, and record the results on the example sheet shown in Figure 2-1. This step may be omitted for non-extractive monitors where dynamic calibration gas mixtures are not used (See 5.1.2).

5.1.2 Set up and calibrate the complete measurement system according to the manufacturer's written instructions. This may be accomplished either in the laboratory or in the field. Make a series of five non-consecutive readings with span gas mixtures alternately at each concentration (e.g., 50%, 90%, 50%, 90%, 50%, etc.). For non-extractive measurement systems, this test may be performed using procedures and two or more calibration gas concentrations differing by a factor of two or more, certified by the manufacturer. Convert the measurement system output readings to ppm and record the results on the example sheet shown in Figure 2-2.

5.2 Field Test for Accuracy (Relative), Zero Drift, Calibration, and Drift—Install and operate the measurement system in accordance with the manufacturer's written instructions and drawings as follows:

5.2.1 Conditioning Period—Offset the zero setting at least 10 percent of span so that negative zero drift can be quantified. Operate the system for an initial 168-hour conditioning period in a normal operational manner.

5.2.2 Operational Test Period—Operate the system for an additional 168-hour period. The system shall monitor the source effluent at all times except when being zeroed, calibrated, or backpurged. For measurement systems employing extractive sampling, it is recommended that the measurement system and the probe tips be placed adjacent to each other in the duct. Record the reference methods test data and measurement system concentrations on the example data sheet shown in Figure 2-3 for the tests given as follows:

5.2.2.1 NO_x Monitoring Systems. Make twenty seven NO_x concentration measurements using the applicable reference method. No more than three measurements shall be performed in any one hour, and any set of three measurements shall be performed concurrently or within a 3-minute interval and the results averaged.

5.2.2.2 SO_2 *Monitoring Systems.* Make nine SO_2 concentration measurements using the applicable reference method. No more than one measurement shall be performed in any one hour.

5.2.3 Field Test for Zero Drift and Calibration Drift. Determine the values given by zero and span gas pollutant concentrations at 2-hour intervals until 15 sets of data are obtained. Alternatively, for non-extractive measurement systems, determine the values given by an electrically or mechanically produced zero condition and by inserting a certified calibration gas concentration equivalent to not less than 300 ppm into the measurement system. Record these readings on the example sheet shown in Figure 2-4. These 2-hour periods need not be consecutive but may not overlap. The zero and span determinations to be made under this paragraph may be made concurrent with the tests under 5.2.2. Zero and calibration corrections and adjustments are allowed only at 24-hour intervals or at such shorter intervals as the manufacturer's written instructions specify. Automatic corrections made by the measurement system without operator intervention or initiation are allowable at any time. During the entire 168-hour operational test period, record the values given by zero and span gas pollutant concentrations before and after adjustment at 24-hour intervals in the example sheet shown in Figure 2-5.

5.3 Field Test for Response Time.

5.31 This test shall be accomplished using the entire measurement system as installed, including sample transport lines if used. Flow rates, line diameters, pumping rates, pressures (do not allow the pressurized calibration gas to change the normal operating pressure in the sample line), etc., shall be at the nominal values for normal operation as specified in the manufacturer's written instructions. If the analyzer is used to sample more than one pollutant source (stack), this test shall be repeated for each sampling point.

5.3.2 Introduce zero gas into the measurement system sampling interface or as close to the sampling interface as possible. When the system output reading has stabilized, switch quickly to a known concentration of pollutant gas at 70 to 90 percent of span. Record the time from concentration switching to final stable response. After the system response has stabilized at the upper level, switch quickly to a zero concentration of pollutant gas. Record the time from concentration switching to final stable response. Alternatively, for nonextractive monitors, the highest available calibration gas concentration shall be switched into and out of the sample path and response times recorded. Perform this test sequence three (3) times. For each test record the results on the example sheet shown in Figure 2-6.

6. *Calculations, Data Analysis and Reporting.*

6.1 Procedure for determination of mean values and confidence intervals.

6.1.1 The mean value of a data set is calculated according to equation 2-1.

$$\bar{x}=\frac{1}{n}\sum_{i=1}^{n}x_i \qquad \text{Equation 2-1}$$

where:

x_i = individual values,
Σ = sum of the individual values,
$\bar{x}$ = mean value, and
n = number of data points.

6.1.2 The 95 percent confidence interval (two sided) is calculated according to equation 2-2.

$$C.I._{95}=\frac{t_{.975}}{n\sqrt{n-1}}\sqrt{n(\Sigma x_i^2)-(\Sigma_i)^2} \qquad \text{Equation 2-2}$$

where:

ΣX_i = sum of all data points,
$t_{.975}=t_{1-\alpha/2}$, and
$C.I._{95}$ = 95 percent confidence interval estimate of the average mean value.

VALUES FOR $t_{.975}$

n	$t_{.975}$
2	12.706
3	4.303
4	3.182
5	2.776
6	2.571
7	2.447
8	2.365
9	2.306
10	2.262
11	2.228
12	2.201
13	2.179
14	2.160
15	2.145
16	2.131

The values in this table are already corrected for n-1 degrees of freedom. Use n equal to the number of samples as data points.

6.2 Data Analysis and Reporting.

6.2.1 Accuracy (Relative) For each of the nine reference method testing periods, determine the average pollutant concentration reported by the continuous measurement system. These average concentrations shall be determined from the measurement system data recorded under 5.2.2 by integrating the pollutant concentrations over each of the time intervals concurrent with each reference method test, then dividing by the cumulative time of each applicable reference method testing period. Before proceeding to the next step, determine the bases (wet or dry) of the measurement system data and reference method test data concentrations. If the bases are not consistent, then a moisture correction shall be applied to either the reference method concentrations or the measurement system concentrations as is appropriate. The correction factor shall be determined by moisture tests concurrent with the reference method testing periods. The moisture test method and the correction procedure employed shall be reported. For each of the nine test runs, subtract the respective reference method test concentrations (use average of each set of 3 measurements for NO_x) from the continuous monitoring system average concentrations. Using these data, compute the mean difference and the 95 percent confidence interval using equations 2-1 and 2-2. Accuracy is reported as the sum of the absolute value of the mean difference and the 95 percent confidence interval expressed as a percentage of the mean reference method value. Use the example sheet shown in Figure 2-3.

6.2.2 Calibration Error—Using the data from paragraph 5.1, subtract the measured pollutant concentration determined under paragraph 5.1.1 (Figure 2-1) from the value shown by the measurement system for each of the 5 readings at each concentration measured under 5.1.2 (Figure 2-2). Calculate the mean of these difference values and the 95 percent confidence intervals according to equations 2-1 and 2-2. The calibration error is reported as the sum of the absolute value of the mean difference and the 95 percent confidence interval as a percentage of each respective calibration gas concentration. Use example sheet shown in Figure 2-2.

6.2.3 Zero Drift (2-hour)—Using the zero concentration values measured each 2 hours

during the field test, calculate the differences between *consecutive* 2-hour readings expressed in ppm. Calculate the mean difference and the confidence interval using equations 2-1 and 2-2. Report the zero drift as the sum of the absolute mean value and the confidence interval as a percentage of the emission standard. Use example sheet shown in Figure 2-4.

6.2.4 Zero Drift (24-hour)—Using the zero concentration values measured every 24 hours during the field test, calculate the differences between the zero point after zero adjustment and the zero value 24 hours later just prior to zero adjustment. Calculate the mean value of these points and the confidence interval using equations 2-1 and 2-2. Report the zero drift (the sum of the absolute mean and confidence interval) as a percentage of the emission standard. Use example sheet shown in Figure 2-5.

6.2.5 Calibration Drift (2-hour)—Using the calibration values obtained at 2-hour intervals during the field test, calculate the differences between consecutive 2-hour readings expressed as ppm. These values should be corrected for the corresponding zero drift during that 2-hour period. Calculate the mean and confidence interval of these corrected difference values using equations 2-1 and 2-2. Do not use the differences between non-consecutive readings. Report the calibration drift as the sum of the absolute mean and confidence interval as a percentage of the emission standard. Use the example sheet shown in Figure 2-4.

6.2.6 Calibration Drift (24-hour)—Using the calibration values measured every 24 hours during the field test, calculate the differences between the calibration concentration reading after zero and calibration adjustment and the calibration concentration reading 24 hours later after zero adjustment but before calibration adjustment. Calculate the mean value of these differences and the confidence interval using equations 2-1 and 2-2. Report the sum of the absolute mean and confidence interval as a percentage of the emission standard. Use the example sheet shown in Figure 2-5.

6.2.7 Response Time—Using the charts from paragraph 5.3, calculate the time interval from concentration switching to 95 percent to the final stable value for all upscale and downscale tests. Report the mean of the three upscale test times and the mean of the three downscale test times. The two average times should not differ by more than 15 percent of the slower time. Report the slower time as the system response time. Use the example sheet shown in Figure 2-6.

6.2.8 Operational Test Period—During the 168-hour performance and operational test period, the measurement system shall not require any corrective maintenance or repair or replacement or adjustment other than that clearly specified as required in the operation and maintenance manuals as routine and expected during a 1-week period. If the measurement system operates within the specified performance parameters and does not require corrective maintenance, repair, replacement or adjustment other than as specified above during the 168-hour test period, the operational period will be successfully concluded. Failure of the measurement to meet this requirement shall call for a repetition of the 168-hour test period. Portions of the test which were satisfactorily completed need not be repeated. Failure to meet any performance specifications shall call for a repetition of the 1-week performance test period and that portion of the testing which is related to the failed specification. All maintenance and adjustments required shall be recorded. Output readings shall be recorded before and after all adjustments.

7. *References.*

7.1 *Monitoring Instrumentation for the Measurement of Sulfur Dioxide in Stationary Source Emissions*, Environmental Protection Agency, Research Triangle Park, N.C., February 1973.

7.2. *Instrumentation for the Determination of Nitrogen Oxides Content of Stationary Source Emissions*, Environmental Protection Agency, Research Triangle Park, N.C., Volume 1, APTD-0847, October 1971; Volume 2, APTD-0942, January 1972.

7.3 *Experimental Statistics*, Department of Commerce, Handbook 91, 1963, p. 3-31, paragraphs 3-3.1.4.

7.4 *Performance Specifications for Stationary-Source Monitoring Systems for Gases and Visible Emissions*, Environmental Protection Agency, Research Triangle Park, N.C. EPA-650/2-74-013, January 1974.

Reference Method Used ____

Date

Mid-Range Calibration Gas Mixture

Sample 1 _____ ppm

Sample 2 _____ ppm

Sample 3 _____ ppm

Average _____ ppm

High-Range (span) Calibration Gas Mixture

Sample 1 _____ ppm

Sample 2 _____ ppm

Sample 3 _____ ppm

Average _____ ppm

Figure 2-1. Analysis of Calibration Gas Mixtures

Calibration Gas Mixture Data (From Figure 2-1)

Mid (50%) ____ppm High (90%) ____ppm

Run #	Calibration Gas Concentration	Measurement System Reading, ppm.	Differences[1], ppm
1			
2			
3			
4			
5			
6			
7			
8			
9			
10			

	Mid	High
Mean difference	___	___
Confidence interval	± ___	± ___
Calibration error = $\frac{\text{Mean Difference}^{2} + \text{C.I.}}{\text{Average Calibration Gas Concentration}} \times 100$	___%	___%

[1]Calibration gas concentration - measurement system reading
[2]Absolute value

Figure 2-2. Calibration Error Determination

Date and Time	Test No.	Reference Method Samples Sample 1 (ppm)	Sample 2 (ppm)	Sample 3 (ppm)	Average*** (ppm)	Analyzer 1-Hour* Average (ppm)	Difference** (ppm)
	1						
	2						
	3						
	4						
	5						
	6						
	7						
	8						
	9						

Mean difference = _____ppm.
95% Confidence Interval = ± _____ppm.
Mean Reference method value = _____ppm.
Accuracy = $\frac{\text{Mean difference (absolute value)} + \text{95\% confidence interval}}{\text{Mean reference method value}} \times 100$ _____%.
*Explain method used to determine average.
**Difference = the 1-hour average minus the reference method average.
***NO_x only.

Figure 2-3. Accuracy Determination

Date	Time Begin	Time End	Data Set No.	Zero Reading	Zero Drift (ΔZero)	Span Reading	(ΔSpan)	Calibration Drift (ΔSpan-ΔZero)
			1					
			2					
			3					
			4					
			5					
			6					
			7					
			8					
			9					
			10					
			11					
			12					
			13					
			14					
			15					

Zero Drift = [Mean Zero Drift* _____ + CI (Zero) _____ Emission Standard] x 100 = _____
Calibration Drift = [Mean Span Drift* _____ + CI (Span) _____ Emission Standard] x 100 = _____
*Absolute Value.

Figure 2-4. Zero and Calibration Drift (2-Hour)

Date and Time	Zero Reading	Zero Drift (ΔZero)	Span Reading (After zero adjustment)	Calibration Drift (ΔSpan)

Zero Drift = [Mean Zero Drift* _____ + CI (Zero) _____
Emission Standard] x 100 = _____.

Calibration Drift = [Mean Span Drift* _____ + CI (Span _____
Emission Standard] x 100 = _____.

*Absolute value

Figure 2-5. Zero and Calibration Drift (24-Hour)

Date of Test _____

Span Gas Concentration _____ppm

Analyzer Span Setting _____ppm

Upscale	1	_____seconds
	2	_____seconds
	3	_____seconds
	Average upscale response	_____seconds
Downscale	1	_____seconds
	2	_____seconds
	3	_____seconds
	Average downscale response	_____seconds

System response time = slower time = _____ seconds.

% deviation from slowest time = $\frac{\text{average upscale minus average downscale} \times 100\%}{\text{slower time}}$

Figure 2-6. Response Time

PERFORMANCE SPECIFICATION 3—PERFORMANCE SPECIFICATIONS AND SPECIFICATION TEST PROCEDURES FOR MONITORS OF OXYGEN FROM STATIONARY SOURCES

1. *Principle and Applicability.*

1.1 Principle. Gases are continuously sampled in the stack. Emissions are analyzed for oxygen by a continuously operating measurement system.

1.2 Applicability. This method is applicable to the instrument systems specified by subparts for continuously monitoring oxygen. Specifications are given in terms of performance. Test procedures are given to determine the capability of the measurement system to conform to the performance specifications prior to approving the systems installed by an affected facility. Sampling may include either the extractive or non-extractive (*in situ*) approach.

2. *Apparatus.*

2.1 Calibration Gas Mixtures. Mixture of known concentrations of oxygen in nitrogen. Nominal oxygen concentrations of 50 percent and 90 percent of the instrument span setting are required. The 90 percent gas mixture is to be used to set and to check the instrument span and is referred to as span gas. If the instrument span setting is higher than 21 percent O_2 (consistent with paragraph 3.2), ambient air may be used in place of the 90 percent calibration gas mixture.

2.2 Zero Gas. A gas containing less than 10 ppm of oxygen.

2.3 Chart Recorded. Analog chart recorder, input voltage range compatible with analyzer system output, full scale (per travel) in 2 seconds or less.

2.4 Continuous Measurement System for Oxygen.

3. *Definitions.*

3.1 Measurement System. The total equipment required for the determination of oxygen in a given source effluent. The system consists of three major subsystems:

3.1.1 Sampling Interface—That portion of the measurement system that performs one or more of the following operations: delineation, acquisition, transportation, and conditioning of a sample of the source effluent or protection of the analyzer from the hostile aspects of the sample or source environment.

3.1.2 Analyzer—That portion of the measurement system which senses the pollutant gas and generates a signal output that is a function of the pollutant concentration.

3.1.3 Data Recorder—That portion of the measurement system that provides a permanent record of the output signal in terms of concentration units.

3.2 Span. The value of pollutant concentration at which the measurement system is set to produce the maximum data display output. For the purposes of this method, the span shall be set approximately 1.5 to 2 times the normal oxygen concentration in the stack gas at the affected facility.

3.3 Zero Drift. The change in measurement system output over a stated period of time of normal continuous operation when the oxygen concentration at the time for the measurements is zero.

3.4 Calibration Drift. The change in measurement system output over a stated period time of normal continuous operation when the oxygen concentration at the time of the measurements is span gas.

3.5 Operational Test Period. A minimum period of time over which a measurement system is expected to operate within certain performance specifications without unscheduled maintenance, repair, or adjustment.

4. *Measurement System Performance Specifications*

A measurement system must meet the performance specifications in Table 3-1 to be considered acceptable under this method.

5. *Performance Specification Test Procedures.* The following test procedures shall be used to determine conformance with the requirements of paragraph 4:

5.1 Calibration Check. Establish a calibration curve for the measurement system using zero, mid-scale gas (50%), and span gas mixtures. Verify that the resultant curve of instrument reading vs calibration gas value is consistent with the expected response curve as described by the instrument manufacturer. If the expected response curve is not produced, additional calibration gas measurements shall be made, or additional steps undertaken to verify the accuracy of the response curve of the analyzer.

5.2 Field Test for Zero Drift and Calibration Drift. Install and operate the measurement system in accordance with the manufacturer's written instructions and drawings as follows:

TABLE 3-1.—PERFORMANCE SPECIFICATIONS

Parameter	Specification
1. Zero drift (2 hours)*	≤1% of span.
2. Zero drift (24-hour)*	≤2% of span.
3. Calibration drift (2 hours)*	≤1% of span.
4. Calibration drift (24-hour)*	≤2% of span.
5. Operational period	168 hours minimum.

*Expressed as sum of absolute mean value plus 95 percent confidence interval of a series of tests.

5.2.1 Conditioning Period. Offset the zero setting at least 10 percent of span so that negative zero drift may be quantified. Operate the system for an initial 168-hour conditioning period in a normal operational manner.

5.2.2 Operational Test Period. Operate the system for an additional 168-hour period. The system shall monitor the source effluent at all times except when being zeroed, calibrated, or backpurged.

5.2.3 Field Test for Zero Drift and Calibration Drift. Determine the values given by zero and span gas concentrations at 2-hour intervals until 15 sets of data are obtained. Alternatively, for non-extractive measurement systems, determine the values given by an electrically or mechanically produced zero condition by inserting a certified calibration gas concentration equivalent to not less than 10 percent O_2 into the measurement system. Record these readings on the example sheet shown in Figure 3-1. These 2-hour periods need not be consecutive but may not overlap. Zero and calibration corrections and adjustments are allowed only at 24-hour intervals or at such shorter intervals as the manufacturer's written instructions specify. Automatic corrections made by the measurement system without operator intervention or initiation are allowable at any time. During the entire 168-hour test period, record the values given by zero and span gas concentrations before and after adjustment at 24-hour intervals in the example sheet shown in Figure 3-2.

6. *Calculations, Data Analysis and Reporting.*

6.1 Procedure for determination of mean values and confidence intervals.

6.1.1 The mean value of a data set is calculated according to equation 3-1.

$$\bar{x}=\frac{1}{n}\sum_{i=1}^{n}x_i \qquad \text{Equation 3-1}$$

where:

x_i = individual values,
Σ = sum of the individual values,
$\bar{x}$ = mean value, and
n = number of data points.

6.1.2 The 95 percent confidence interval (two sided) is calculated according to equation 3-2.

$$C.I._{95}=\frac{t_{.975}}{n\sqrt{n-1}}\sqrt{n(\sum x_i^2)-(\sum x_i)^2} \qquad \text{Equation 3-2}$$

where:

ΣX = sum of all data points,
$t_{.975}=t_{1-\alpha/2}$, and
$C.I._{95}$ = 95 percent confidence interval estimate of the average mean value.

VALUES FOR $t_{.975}$

n	$t_{.975}$
2	12.706
3	4.303
4	3.182
5	2.776
6	2.571
7	2.447
8	2.365
9	2.306
10	2.262
11	2.228
12	2.201
13	2.179
14	2.160
15	2.145
16	2.131

The values in this table are already corrected for n-1 degrees of freedom. Use n equal to the number of samples as data points.

6.2 Data Analysis and Reporting.

6.2.1 Zero Drift (2-hour)—Using the zero concentration values measured each 2 hours during the field test, calculate the differences between *consecutive* 2-hour readings expressed in ppm. Calculate the mean difference and the confidence interval using equations 3-1 and 3-2. Report the zero drift as the sum of the absolute mean value and the confidence interval as a percentage of the instrument span. Use example sheet shown in Figure 3-1.

6.2.2 Zero Drift (24-hour)—Using the zero concentration values measured every 24 hours during the field test, calculate the differences between the zero point after zero adjustment and the zero value 24 hours later just prior to zero adjustment. Calculate the mean value of these points and the confidence interval using equations 3-1 and 3-2. Report the zero drift (the sum of the absolute mean and confidence interval) as a percentage of the instrument span. Use example sheet shown in Figure 3-2.

6.2.3 Calibration Drift (2-hour)—Using the calibration values obtained at 2-hour intervals during the field test, calculate the differences between consecutive 2-hour readings expressed as ppm. These values should be corrected for the corresponding zero drift during that 2-hour period. Calculate the mean and confidence interval of these corrected difference values using equations 3-1 and 3-2. Do not use the differences between non-consecutive readings. Report the calibration drift as the sum of the absolute mean and confidence interval as a percentage of the instrument span. Use the example sheet shown in Figure 3-1.

6.2.4 Calibration Drift (24-hour)—Using the calibration values measured every 24 hours during the field test, calculate the differences between the calibration concentration reading after zero and calibration adjustment and the calibration concentration reading 24 hours later after zero adjustment but before calibration adjustment. Calculate the mean value of these differences and the confidence interval using equations 3-1 and 3-2. Report the sum of the absolute mean and confidence interval as a percentage of the instrument span. Use the example sheet shown in Figure 3-2.

6.2.5 Operational Test Period—During the 168-hour performance and operational test period, the measurement system shall not require any corrective maintenance or repair or replacement or adjustment other than that clearly specified as required in the operation and maintenance manuals as routine and expected during a 1-week period. If the measurement system operates within the specified performance parameters and does not require corrective maintenance, repair, replacement or adjustment other than as specified above during the 168-hour test period, the operational period will be successfully concluded. Failure of the measurement system to meet this requirement shall call for a repetition of the 168-hour test period. Portions of the test which were satisfactorily completed need not be repeated. Failure to meet any performance specifications shall call for a repetition of the 1-week performance test period and that portion of the testing which is related to the failed specification. All maintenance and adjustments required shall be recorded. Output readings shall be recorded before and after all adjustments.

7. *References.*

7.1 *Performance Specifications for Stationary Source Monitoring Systems for Gases and Visible Emissions*, Environmental Protection Agency, Research Triangle Park, N.C., EPA-650/2-74-013, January 1974.

7.2 *Experimental Statistics*, Department of Commerce, National Bureau of Standards Handbook 91, 1963, p. 3-31, paragraphs 3-3.1.4.

Date	Time Begin	Time End	Data Set No.	Zero Reading	Zero Drift (ΔZero)	Span Reading	(ΔSpan)	Calibration Drift (ΔSpan-ΔZero)
			1					
			2					
			3					
			4					
			5					
			6					
			7					
			8					
			9					
			10					
			11					
			12					
			13					
			14					
			15					

Zero Drift = [Mean Zero Drift* _____ + CI (Zero) _____ Instrument Span] x 100 = _____

Calibration Drift = [Mean Span Drift* _____ + CI (Span) _____ Instrument Span] x 100 = _____

*Absolute Value.

Figure 3-1. Zero and Calibration Drift (2-Hour)

Date and Time	Zero Reading	Zero Drift (Δ Zero)	Span Reading (After zero adjustment)	Calibration Drift (Δ Span)

Zero Drift = [Mean Zero Drift* _____ + CI (Zero) _____ ÷ Instrument Span] x 100 = _____.

Calibration Drift = [Mean Span Drift* _____ + CI (Span) _____ ÷ Instrument Span] x 100 = _____.

*Absolute value

Figure 3-2. Zero and Calibration Drift (24-Hour)

[FR Doc.74-20576 Filed 9-10-74;8:45 am]

[40 CFR Part 51]

[FRL 239-8]

REQUIREMENTS FOR THE PREPARATION, ADOPTION AND SUBMITTAL OF IMPLEMENTATION PLANS

Emission Monitoring of Stationary Sources

JULY 15, 1974.

Sections 110(a)(2)(F) (ii) and (iii) of the Clean Air Act, as amended in 1970, require State implementation plans to contain legally enforceable procedures which require the owners or operators of stationary sources to install equipment to monitor emissions from such sources and to report the data obtained. EPA's regulations currently require that states have legal authority to require such monitoring and recording (40 CFR 51.11(a)(6)), but do not require that state plans contain legally enforceable procedures mandating monitoring and recording. This is because at the time EPA's regulations for implementation plan preparation were published, the Agency had accumulated little data on the availability and reliability of continuous monitoring devices. The Agency believed that the state-of-the-art was such that it was not prudent to require existing sources to install such devices.

Since that time, much work has been done by the Agency and others to field test and compare various emission monitors. As a result of this work, the Agency now believes that for certain sources, general specifications for accuracy, reliability and durability can be established for continuous emission monitors of oxygen, sulfur dioxide, and nitrogen dioxide and for the continuous measurement of opacity for particulate matter emissions. Accordingly, the Agency is proposing to amend 40 CFR 51.19, Source Surveillance, by adding a new paragraph (e) which will require States to revise their implementation plans to require sources to install monitoring instruments and to report the resulting data to the appropriate State Agency.

State plans submitted in response to 40 CFR 51.19(e) must (1) require owners or operators of specified categories of stationary sources to install emission monitoring equipment within one year of plan approval, (2) specify the categories of sources subject to the requirements, (3) identify for each category of sources the pollutant(s) which must be monitored, (4) set forth performance specifications for monitoring instruments, (5) require that such instruments must meet performance specifications through on-site testing by the owner or operator, and (6) require that data derived from such monitoring be summarized and made available to the State on a quarterly basis. The minimum data requirements set forth by EPA require that for gaseous monitors all hourly values reduced to the units for the applicable standard, not just the excesses above the applicable standard, should be reported to the State. By having more than just the excess emissions, the State will have a more

APPENDIX C

MONITORING SYSTEMS DRAWINGS

CONTENTS

Drawing No.		Page
B/AE-115010	Sampling System.	141
B/AE-14866	Condensation-Type Conditioner.	144
B/AE-14774	Houston Atlas Sampling System.	145
C/AE-14856	Meloy Labs Model FSA-190-2A with Dyfusatron Monitoring System.	146
C/AE-14874	Water Cooled Condensor	147

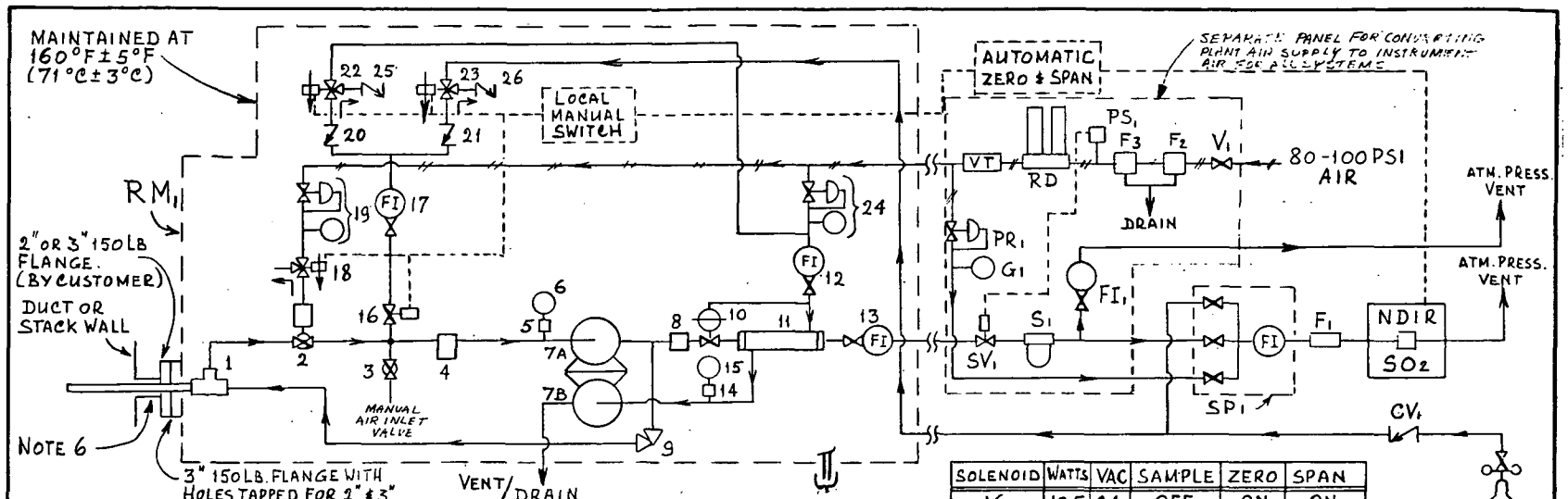

SOLENOID	WATTS	VAC	SAMPLE	ZERO	SPAN
16	10.5	24	OFF	ON	ON
18	20	24	ON	OFF	OFF
22	9	24	OFF	ON	OFF
23	9	24	OFF	OFF	ON
SV1	6	110	ON	ON	ON

LEGEND:

- RM1 — REFLUX MODULE.
- VT — VOLUME TANK
- RD — REGENERATIVE DRIER
- PS1 — PRESSURE SWITCH
- F1-F3 — FILTERS
- PR1 — PRESSURE REGULATOR
- G1 — PRESSURE GAUGE
- SV1 — 2WAY SOLENOID VALVE.
- S1 — SEPARATOR
- FI1 — BYPASS FLOWMETER WITH VALVE
- SP1 — GAS SELECTOR PANEL
- CV1 — CHECK VALVE

NOTES:

1) PROVIDE SUPPORT FOR REFLUX MODULE AS REQUIRED.
2) USE 1/4" O.D. TEFLON TUBING FOR THE INTERCONNECTING SAMPLE LINE.
3) USE 1/4" O.D. POLYETHYLENE TUBING OR EQUAL FOR PURGE AIR LINE. (100 PSIG RATING)
4) USE 1/4" O.D. TEFLON TUBING FOR INTERCONNECTING CALIBRATION GAS LINE.
5) SAMPLE WILL BE ISOLATED FROM ANALYZER IF INSTRUMENT AIR FAILS.
6) INSULATE AS REQUIRED TO MAINTAIN SAMPLE ABOVE DEWPOINT TEMPERATURE.

BY	DATE	REV	DESCRIPTION	DATE	APPD
DR BK	9-12-74	1	DELETED AIR OPERATED VALVE		
APPD	9-[illegible]		FOR CALIB. GASES.	11-25-74	JAH

THIS DOCUMENT CONTAINS PROPRIETARY INFORMATION OF BECKMAN INSTRUMENTS, INC AND IS TENDERED SUBJECT TO THE CONDITION THAT THE INFORMATION IS BE RETAINED IN CONFIDENCE OR NOT BE REPRODUCED OR COPIED IN WHOLE OR IN PART AND CANNOT BE USED OR INCORPORATED IN ANY PRODUCT EXCEPT UNDER AN EXPRESS WRITTEN AGREEMENT WITH BECKMAN INSTRUMENTS, INC

Beckman® INSTRUMENTS, INC
Process Instruments Division
APPLICATION ENGINEERING
2500 Harbor Boulevard
Fullerton, California 92634

TITLE REFLUX PROBE, PERMEATION DRYING SAMPLING SYSTEM

DWG NO. B/AE-115 C10 SHEET 1 OF 1 REV 1

27-72-31 700842 Printed in U.S.A.

Drawing Ref. No.	Beckman Part No.	Description	Quantity
1		Reflux probe per C/AE 14120 (8 foot length)	1
2		Ball valve with pneumatic actuator air to open with spring return, alloy 20	1
3		Ball Valve, alloy 20, teflon, manual	1
4	856181X	X = teflon coated with spring polypropylene coated. (1/2") port, 100 PSIG, SS body, 1 micron, glass element, teflon gasket	1
5,14		Gauge snubber	2
6,15	835891	Compound press-vac gauge 15 psig-0-30 "Hg vac, 2-1/2" dial 1/4" lower male connection, 316 stainless steel socket and tube, drawn steel case	2
7A,B		Dual head diaphragm pump, one head teflon coated, 115 VAC 60 Hz, 1/8 HP 180 watts, 1/4" NPT connections	1
8		Filter with nominal 10 micron kynar element, polypropylene, viton, 1/4" O.D. tube connections	1
9		Relief valve with teflon coated spring & viton O-ring, adjusted for 10 psig, 1/4" NPT connections	1
10		Differential pressure regulator with 13 psi spring on top of diaphragm, teflon coat lower body, 1/4" NPT connections	1
11		Polypropylene fittings, neoprene outer shell, 1/4" O.D. sample connection 3.8" O.D. tube purge connection	1
12,17		Flowmeter with needle valve on outlet, 480-4800 cc/min air at 70° F & 1 ATM, 316 SS, viton, 1/4" NPT connections	2

Beckman® INSTRUMENTS, INC.	CODE IDENT NO. 05721	SIZE A	Reflux Probe, Permeation Drying, Sampling System AE-115010
	SCALE		SHEET 2 of 3

X27-72.71 E-249

Drawing Ref. No.	Beckman Part No.	Description	Quantity
13		Flowmeter with needle valve on inlet, 480-4800 cc/min air at 70° F & 1 ATM, 316 SS, viton, 1/4" NPT connections	1
19,24		Pressure regulator with gauge, 10-180 PSI range, 1/4" NPT female connections	1
18		Solenoid valve with mounting bracket, 24 VAC 60 Hz, brass, buna N, CV = 0.15, 1/4" NPT connections	1
16		Two way normally closed solenoid valve, viton, 24 VAC 60 Hz, 1/4 inch NPT connections	1
20,21		Check valve 316 SS, buna N, 10 psi cracking pressure 1/4" swagelok connections, 1/4 inch NPT connections	2
22,23		3-way solenoid valve, 24 VAC 60 Hz, stainless steel, viton CV = 0.31, 1/4" NPT connection	2
25,26		Check valve, 1/4 inch NPT connections	2

Beckman® INSTRUMENTS, INC.	CODE IDENT NO. 05721	SIZE A	Reflux Probe, Permeation Drying, Sampling System AE-115010
	SCALE		SHEET 3 of 3

X27-72.71 E-249

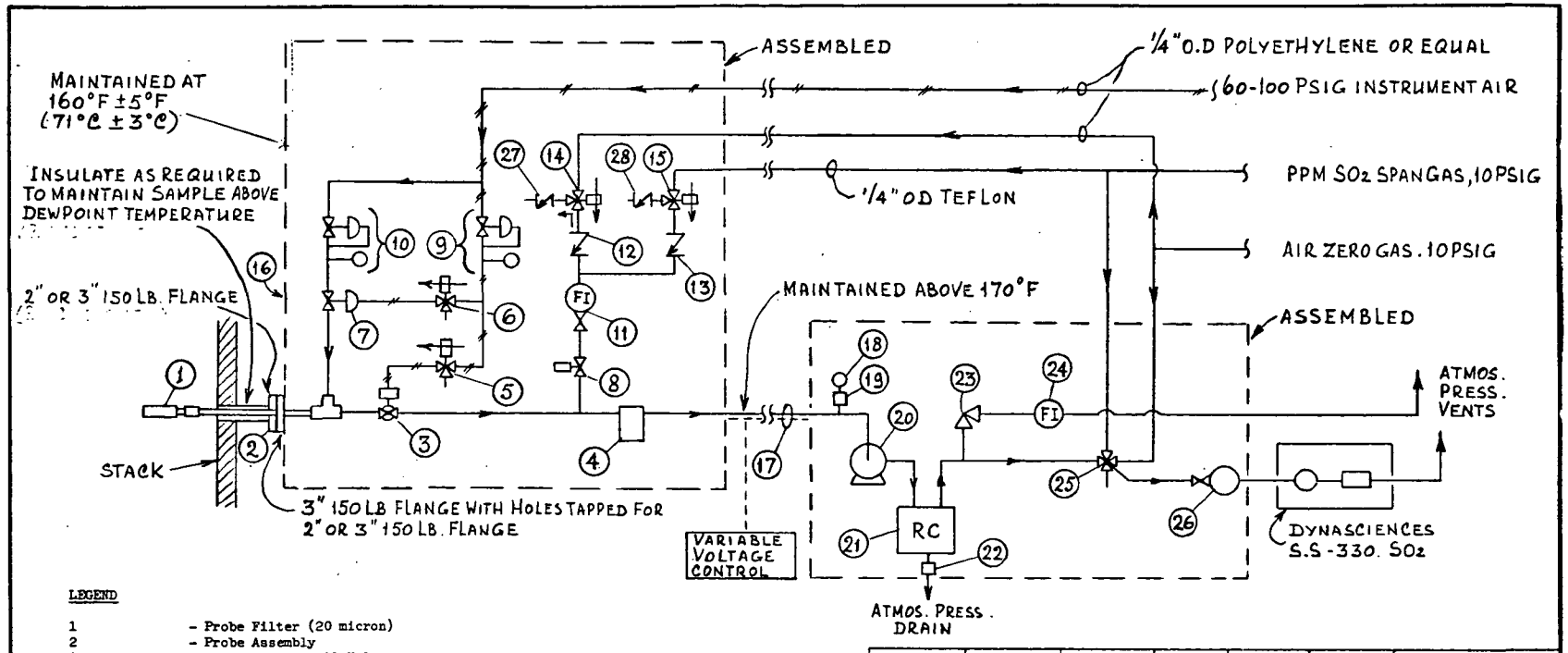

LEGEND

1	- Probe Filter (20 micron)
2	- Probe Assembly
3	- Air Operated Ball Valve
4	- 1 Micron Fiber Glass Filter
5, 6	- 3 Way Solenoid Valves for Air Service
7	- Air Operated Valve
8	- Two Way Calibration Solenoid Valve
9, 10	- Air Pressure Regulators with Gauge
11, 24, 26	- Flowmeters
12, 13, 27, 28	- Check Valves
14, 15	- Three Way Calibration Solenoid Valve
16	- Heated Weather Resistant Enclosure
17	- 3/8" O.D. Teflon Electrically Traced Line
18, 19	- Vacuum Gauge with Smubber
20	- Teflon Coated Diaphragm Pump
21, 22	- Refrigerated Condenser with PVC Float Trap
23	- Relief Valve (10 psi)
25	- Five Way Manual Calibration Valve
26	- Flow Meter with Integral Valve

SOLENOID	WATTS	VAC.	SAMPLE	ZERO	SPAN	MANUAL BLOWBACK
5	20	24	ON	OFF	OFF	OFF
6	20	24	OFF	ON	OFF	ON
8	10.5	24	OFF	ON	ON	OFF
14	9	24	OFF	ON	OFF	OFF
15	9	24	OFF	OFF	ON	OFF

BY	DATE	REV	DESCRIPTION	DATE	APPD
DR BK	5-5-75				
APPD					

Beckman INSTRUMENTS, INC
Process Instruments Division
APPLICATION ENGINEERING
2500 Harbor Boulevard
Fullerton, California 92634

TITLE CONDENSATION TYPE SAMPLE CONDITIONER -(POWER PLANT-CNLY)

DWG NO. B/AE-14866 REV

Form 27-72.31 700842 Printed in U.S.A.

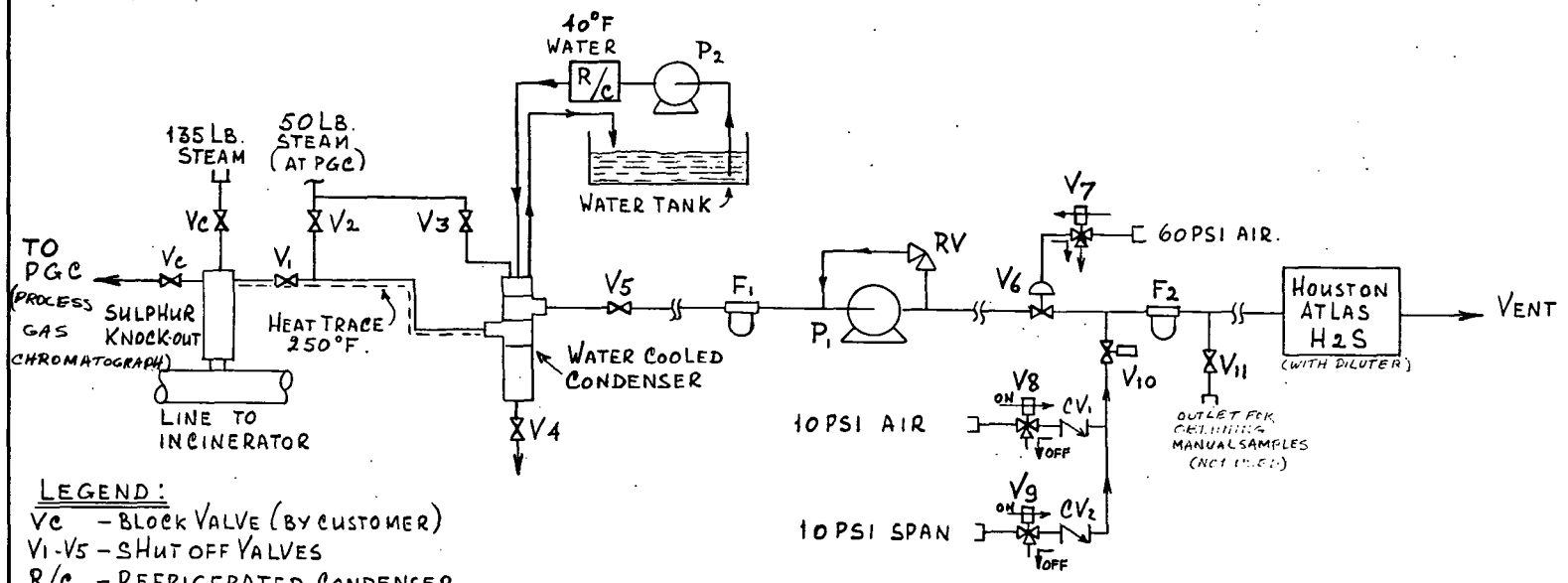

LEGEND:

- Vc – BLOCK VALVE (BY CUSTOMER)
- V1-V5 – SHUT OFF VALVES
- R/C – REFRIGERATED CONDENSER.
- F1, F2 – FILTERS
- V6 – AIR OPERATED VALVE
- V7-V9 – 3 WAY SOLENOID VALVES.
- V10 – 2 WAY SOLENOID VALVE.
- V11 – METERING VALVE
- P1, P2 – PUMPS
- RV – RELIEF VALVE.
- CV1, CV2 – CHECK VALVES.

BY	DATE	REV	DESCRIPTION	DATE	APPD
DR BK	3-19-75				
APPD					

THIS DOCUMENT IS STRICTLY PROPRIETARY TO BECKMAN INSTRUMENTS, INC. AND IS TRANSMITTED TO THE RECIPIENT UNDER THE CONDITIONS THAT THE INFORMATION IS NOT TO BE REPRODUCED OR COPIED IN WHOLE OR IN PART AND IS NOT TO BE USED OR INCORPORATED IN ANY PRODUCT EXCEPT UNDER AN EXPRESS WRITTEN AGREEMENT WITH BECKMAN INSTRUMENTS, INC.

Beckman® INSTRUMENTS, INC.

Process Instruments Division
APPLICATION ENGINEERING
2500 Harbor Boulevard
Fullerton, California 92634

TITLE HOUSTON ATLAS SAMPLING SYSTEM.

DWG NO. B/AE- 14774

REV

Form 27-72-31 700842 Printed in U.S.A.

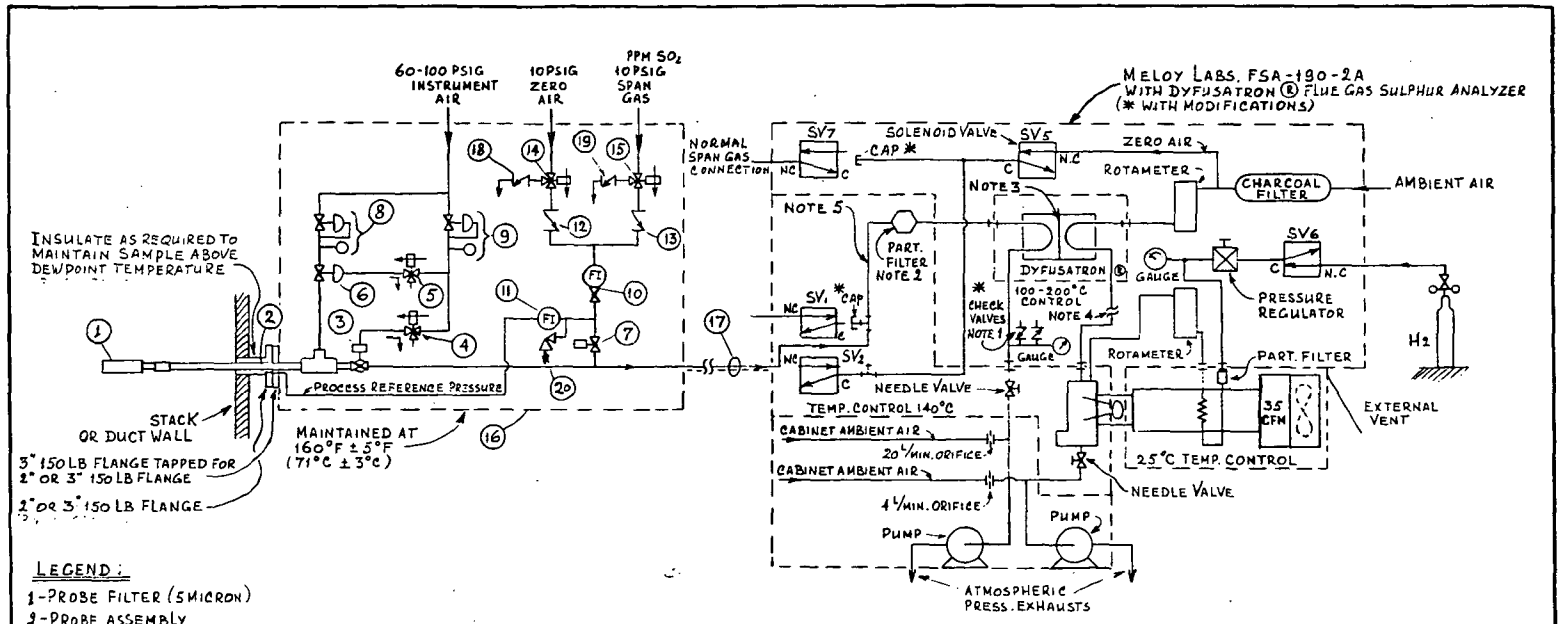

LEGEND:

1 - PROBE FILTER (5 MICRON)
2 - PROBE ASSEMBLY
3 - AIR OPERATED BALL VALVE
4,5 - 3 WAY SOLENOID VALVES (AIR SERVICE)
6 - AIR OPERATED VALVE
7 - 2 WAY CALIBRATION SOLENOID VALVE
8,9 - AIR PRESS REGULATORS WITH GAUGE
10,11 - FLOWMETERS
12,13,18 & 19 - CHECK VALVES
14,15 - 3 WAY CALIBRATION SOLENOID VALVES
16 - HEATED WEATHER RESISTANT ENCLOSURE
17 - 1/4" OD TEFLON ELECTRICALLY TRACED SAMPLE LINE
20 - RELIEF VALVE.

NOTES:

1) VACUUM BREAKER ADDED TO PROTECT DYFUSATRON® DIAPHRAGM. 1/3 PSID ORIGINAL RELIEF VALVE REPLACED WITH A LARGER Cv VALVE SET AT 1/3 PSID.
2) FILTER MOVED TO HIGH TEMP. OVEN 1 TO PREVENT CONDENSATION.
3) WIRE MESH SCREEN ADDED TO DYFUSATRON® TO SUPPORT TEFLON MEMBRANE.
4) DYNASCIENCE SS 310 SO_2 ANALYZER PLUMBED INTO DETECTOR SAMPLE AT THIS POINT.
5) SOLENOID VALVES BYPASSED. SAMPLE PLUMBED DIRECTLY TO PARTICULATE FILTER. (VALVES NOT REQUIRED IN TEST PROGRAM)

SOLENOID VALVE	WATTS	VAC.	SAMPLE	ZERO	SPAN
4	20	24	ON	OFF	OFF
5	20	24	OFF	ON	OFF
7	10.5	24	OFF	ON	ON
14	9	24	OFF	ON	OFF
15	9	24	OFF	OFF	ON

BY	DATE	REV	DESCRIPTION	DATE	APPD
DR					
APPD					

Beckman INSTRUMENTS INC.

TITLE MELOY LABS. MODEL FSA-190-2A WITH DYFUSATRON MONITORING SYSTEM

DWG NO. C/AE-14856 REV

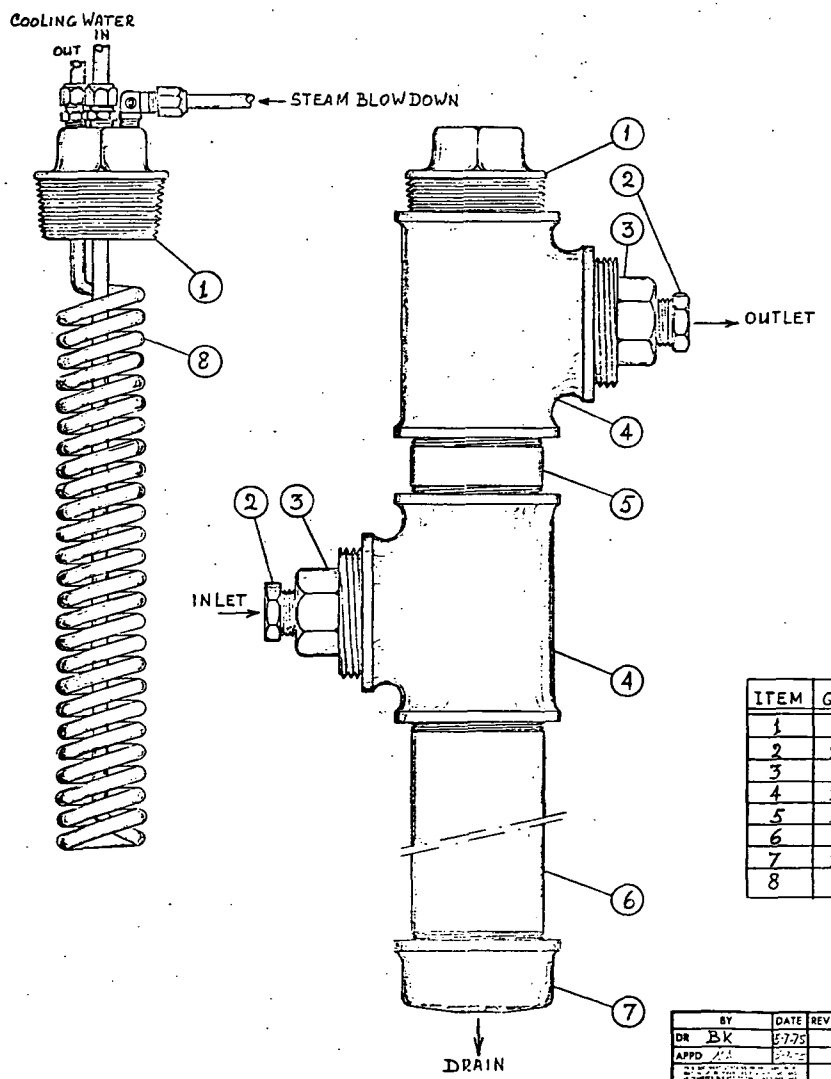

ITEM	QTY.	DESCRIPTION
1	1	3 1/2" NPT PIPE PLUG (BLACK IRON) WITH 3 x 1/4" NPT HOLES
2	2	3/4" x 1/4" REDUCING BUSHING (BLACK IRON)
3	2	3 1/2" x 3/4" REDUCING BUSHING (BLACK IRON)
4	2	3 1/2" PIPE TEE (BLACK IRON)
5	1	3 1/2" x 2 1/2" LONG PIPE NIPPLE (BLACK IRON)
6	1	3 1/2 x 12" LONG PIPE NIPPLE (BLACK IRON)
7	1	3 1/2" PIPE CAP (BLACK IRON) WITH 3/4" NPT HOLE IN CENTER
8	1	1/4" x 20 FT COOLING COIL (304 SS.)

BY	DATE	REV	DESCRIPTION	DATE	APPD
DR BK	5-7-75				
APPD					

Beckman INSTRUMENTS, INC.

TITLE WATER COOLED CONDENSER

DWG NO. C/AE-14874

REV

APPENDIX D

RESULTS OF AN EVALUATION OF EPA COMPLIANCE TEST METHODS 6(SO_2) and 11(H_2S) IN THE RANGE OF 0.15 TO 0.9% OF EACH IN NITROGEN

CONTENTS

Page

Method 6 Tests and Results. 150
Method 11 Tests and Results 157

METHOD 6

TESTS AND RESULTS

SUMMARY OF METHOD 6 TESTS AND RESULTS

A series of tests were run on two sets of gases containing from 150 to 460 ppm and from 4000 to 9300 ppm sulfur dioxide in nitrogen. Good results were obtained for the set of gases that contained the lower concentrations. Reasonable results were obtained for the other set, but in three of four cases the concentrations that were determined by using Method 6 were lower than expected.

TEST METHOD

The test used was Method 6 as given in the Federal Register, Volume 36, Number 247, pages 24890-24891.* Briefly, the Method specifies that the gas to be analyzed be passed through a train of four midget impingers of 30 ml capacity each. The first is to contain 15 ml of 80% 2-propanol, each of the next two is to contain 15 ml of 3% hydrogen peroxide, and the last is to be empty. The gas that is to be analyzed is passed through the train and any sulfur dioxide present is captured and oxidized to sulfate ion. An air purge is used to flush dissolved SO_2 from the first impinger to the second, third, and fourth impingers. The contents of the second, third, and fourth impingers are collected and diluted to a standard volume. Aliquots of this solution are mixed with 2-propanol and titrated with barium perchlorate solution to a thorin endpoint. A blank is run with each series of samples. From a knowledge of the amount of barium perchlorate consumed and the amount of gas passed through the train, the concentration of sulfur dioxide in the gas can be calculated.

---

*These pages are attached

The sampling rate and sampled volume were nominally 0.056 m^3 (2 cu ft) per hour and 0.028 m^3 (1 cu ft), respectively. Exact values varied from run to run.

WORKING SOLUTIONS

Working solutions were as specified in the Method. Standardized hundredth-normal sulfuric acid was purchased and used without further analysis.

MODIFICATIONS TO THE BASIC METHOD

No modifications were made to the basic method; however, those gases that contained higher levels of sulfur dioxide were not analyzed in exactly the same way as those that contained lower levels. The difference involved the extent to which the contents of the absorbing impingers were diluted in preparation for titrations. In the first phase of the program, gases with levels of sulfur dioxide below 500 ppm were employed. As specified in the Test Method, the contents of the absorbing impingers were diluted to 50 ml, and 10-ml aliquots of the solution were titrated (after being mixed with 40 ml of 2-propanol). Under the existing conditions, between 7 and 20 ml of barium perchlorate solution was used in a typical titration and the endpoint was reproducible to within a drop or two. Using exactly the same dilution, something in excess of 100 ml of barium perchlorate solution was required in the analysis of a gas that contained one of the higher levels of sulfur dioxide, and the endpoint of a typical titration was difficult to judge accurately. The reproducibility was not nearly so good as for the samples that contained lower levels of sulfur dioxide.

A series of preliminary experiments established that much better reproducibility could be obtained (with no loss of accuracy) if the contents of the absorbing impingers were diluted to 250 ml (when higher concentrations were employed) and 10-ml aliquots were analyzed. The endpoint is sharper and more easily recognized. This is not a modification of the method

since the volume to which the sample is diluted is shown as a variable in equation (6-2) (see attached) rather than being included as a constant.

TEST GASES

A total of 17 tests were run on 5 gases that contained from about 150 to 460 ppm sulfur dioxide in nitrogen. All these were obtained from an outside vendor--Liquid Carbonic. An additional ten tests were run on 4 gases in which the concentration ranged from about 3700 to about 9400 ppm in nitrogen. Two of these were supplied by the gas blending facility of Beckman Instruments, Inc., and 2 were supplied by Liquid Carbonic.

The concentrations of gases provided by Liquid Carbonic were established by controlling the pressure of each component during the blending operation. Each blend was then analyzed by an iodine-thiosulfate wet-chemical analysis. The estimated accuracy was from 3 to 5% for the analysis.

The concentrations of the gases obtained internally were established by controlling the pressure of each component during the blending operation. The expected accuracy for this operation is approximately 2%.

TEST RESULTS

The results obtained for the gases containing less than 500 ppm sulfur dioxide are shown in Table 15.

In all cases except one the mean concentration, as determined with Method 6, lies near the center of the range that was reported by the vendor. The one exception involved cylinder No. 39098, and even in that case the disagreement is only slight since the highest value obtained by using Method 6 is only 2 ppm below the range reported by the vendor.

The results obtained for the gases containing more than 3500 ppm sulfur dioxide are shown in Table 16.

Table 15. TEST RESULTS--LOW-CONCENTRATION GASES*

METHOD 6			VENDOR		
Cylinder	Concentration, Mean (ppm)	Experimental Values, Range	Concentration ppm	Concentration Date	Range, Assuming 5% Accuracy
55256	157	155-161	158		154-162
7212	310	302-316	312 33	(10/29) (11/07)	305-319 325-341
39098	425	420-429	442 442	(10/29) (11/07)	431-453 431-453
31661	458	454-462	458 458	(11/04) (11/07)	447-469 447-469
270310	451	450-453	455 455	(11/04) (11/07)	444-466 444-466

*Liquid Carbonic was source for all gases.

Table 16. TEST RESULTS--HIGH-CONCENTRATION GASES

		METHOD 6		VENDOR	
Cylinder	Source	Concentration, Mean (ppm)	Experimental Values Range	Concentration (ppm)	Range Assuming 5% Accuracy
316513	Beckman	3750	3710-3780	4000	3800-4200
14940	Beckman	5540	5530-5550	6000	5760-6240
2708	Liquid Carbonic	8815	8810-8820	9160	8710-9610
6817	Liquid Carbonic	9310	9290-9340	9310	8850-9770

In three out of four cases the mean concentrations, obtained by using Method 6, are lower than expected--falling below the expected range (cylinders No. 316513 and No. 14940) or near the lower edge of the expected range (cylinder No. 2708). Only in one case (cylinder No. 6817) does the mean concentration, obtained by using Method 6, fall within the expected range. Thus, there is at least some reason to believe Method 6 may be less than satisfactory for use at higher concentrations.

The reason for this is not immediately obvious. Experiments were performed to determine if some of the sulfur dioxide was passing untrapped through the sampling train. Apparently this is not the case. For example, a third impinger of hydrogen peroxide was added to the end of the sampling train and the gas from cylinder No. 2708 (9160 ppm) was passed through the train. The contents of the impinger were diluted to 25 ml, and a 10-ml aliquot was analyzed. The endpoint of the titration was reached after only one drop of titrant was added, indicating insignificant carryover. Further, in a run involving the gas from cylinder No. 14940 (6000 ppm), the second impinger of hydrogen peroxide was found to contain the equivalent of 26 ppm, indicating that most of the sulfur dioxide had been captured in the first impinger.

PLANT _____

DATE _____

RUN NO. _____

CONTAINER NUMBER	WEIGHT OF PARTICULATE COLLECTED, mg		
	FINAL WEIGHT	TARE WEIGHT	WEIGHT GAIN
1			
2			
TOTAL			

	VOLUME OF LIQUID WATER COLLECTED		
	IMPINGER VOLUME, ml	SILICA GEL WEIGHT, g	
FINAL			
INITIAL			
LIQUID COLLECTED			
TOTAL VOLUME COLLECTED		g*	ml

CONVERT WEIGHT OF WATER TO VOLUME BY DIVIDING TOTAL WEIGHT INCREASE BY DENSITY OF WATER. (1 g. ml):

$$\frac{\text{INCREASE, g}}{(1\ \text{g/ml})} = \text{VOLUME WATER, ml}$$

Figure 5-3. Analytical data.

6.6.2 Concentration in lb./cu. ft.

$$c_s = \frac{\left(\frac{1}{453{,}600}\ \frac{\text{lb.}}{\text{mg.}}\right) M_n}{V_{m_{std}}} = 2.205 \times 10^{-6} \frac{M_n}{V_{m_{std}}} \qquad \text{equation 5-5}$$

where:

c_s = Concentration of particulate matter in stack gas, lb./s.c.f., dry basis.

453,600 = Mg/lb.

M_n = Total amount of particulate matter collected, mg.

$V_{m_{std}}$ = Volume of gas sample through dry gas meter (standard conditions), cu. ft.

6.7 Isokinetic variation.

$$I = \frac{T_s\left[\frac{V_{1_c}(\rho_{H_2O})R}{M_{H_2O}} + \frac{V_m}{T_m}\left(P_{bar} + \frac{\Delta H}{13.6}\right)\right]}{\theta V_s P_s A_n} \times 100$$

$$= \frac{\left(1.667\frac{\text{min.}}{\text{sec.}}\right)\left[\left(0.00267\frac{\text{in. Hg-cu. ft.}}{\text{ml.-°R}}\right)V_{1_c} + \frac{V_m}{T_m}\left(P_{bar} + \frac{\Delta H}{13.6}\right)\right]}{\theta V_s P_s A_n} \qquad \text{Equation 5-6}$$

where:

I = Percent of isokinetic sampling.

V_{1_c} = Total volume of liquid collected in impingers and silica gel (See Fig. 5-3), ml.

ρ_{H_2O} = Density of water, 1 g./ml.

R = Ideal gas constant, 21.83 inches Hg-cu. ft./lb.-mole-°R.

M_{H_2O} = Molecular weight of water, 18 lb./lb.-mole.

V_m = Volume of gas sample through the dry gas meter (meter conditions), cu. ft.

T_m = Absolute average dry gas meter temperature (see Figure 5-2), °R.

P_{bar} = Barometric pressure at sampling site, inches Hg.

ΔH = Average pressure drop across the orifice (see Fig. 5-2), inches H_2O.

T_s = Absolute average stack gas temperature (see Fig. 5-2), °R.

θ = Total sampling time, min.

V_s = Stack gas velocity calculated by Method 2, Equation 2-2, ft./sec.

P_s = Absolute stack gas pressure, inches Hg.

A_n = Cross-sectional area of nozzle, sq. ft.

6.8 Acceptable results. The following range sets the limit on acceptable isokinetic sampling results:

If $90\% \leq I \leq 110\%$, the results are acceptable, otherwise, reject the results and repeat the test.

7. *Reference.*

Addendum to Specifications for Incinerator Testing at Federal Facilities, PHS, NCAPC, Dec. 6, 1967.

Martin, Robert M., Construction Details of Isokinetic Source Sampling Equipment, Environmental Protection Agency, APTD-0581.

Rom, Jerome J., Maintenance, Calibration, and Operation of Isokinetic Source Sampling Equipment, Environmental Protection Agency, APTD-0576.

Smith, W. S., R. T. Shigehara, and W. F. Todd, A Method of Interpreting Stack Sampling Data, Paper presented at the 63d Annual Meeting of the Air Pollution Control Association, St. Louis, Mo., June 14-19, 1970.

Smith, W. S., et al., Stack Gas Sampling Improved and Simplified with New Equipment, APCA paper No. 67-119, 1967.

Specifications for Incinerator Testing at Federal Facilities, PHS, NCAPC, 1967.

METHOD 6—DETERMINATION OF SULFUR DIOXIDE EMISSIONS FROM STATIONARY SOURCES

1. *Principle and applicability.*

1.1 Principle. A gas sample is extracted from the sampling point in the stack. The acid mist, including sulfur trioxide, is separated from the sulfur dioxide. The sulfur dioxide fraction is measured by the barium-thorin titration method.

1.2 Applicability. This method is applicable for the determination of sulfur dioxide emissions from stationary sources only when specified by the test procedures for determining compliance with New Source Performance Standards.

2. *Apparatus.*

2.1 Sampling. See Figure 6-1.

2.1.1 Probe—Pyrex[1] glass, approximately 5 to 6 mm. ID, with a heating system to prevent condensation and a filtering medium to remove particulate matter including sulfuric acid mist.

2.1.2 Midget bubbler—One, with glass wool packed in top to prevent sulfuric acid mist carryover.

2.1.3 Glass wool.

2.1.4 Midget impingers—Three.

2.1.5 Drying tube—Packed with 6 to 16 mesh indicating-type silica gel, or equivalent, to dry the sample.

2.1.6 Valve—Needle valve, or equivalent, to adjust flow rate.

2.1.7 Pump—Leak-free, vacuum type.

2.1.8 Rate meter—Rotameter or equivalent, to measure a 0-10 s.c.f.h. flow range.

2.1.9 Dry gas meter—Sufficiently accurate to measure the sample volume within 1%.

2.1.10 Pitot tube—Type S, or equivalent,

[1] Trade names.

necessary only if a sample traverse is required, or if stack gas velocity varies with time.

2.2 Sample recovery.

2.2.1 Glass wash bottles—Two.

2.2.2 Polyethylene storage bottles—To store impinger samples.

2.3 Analysis.

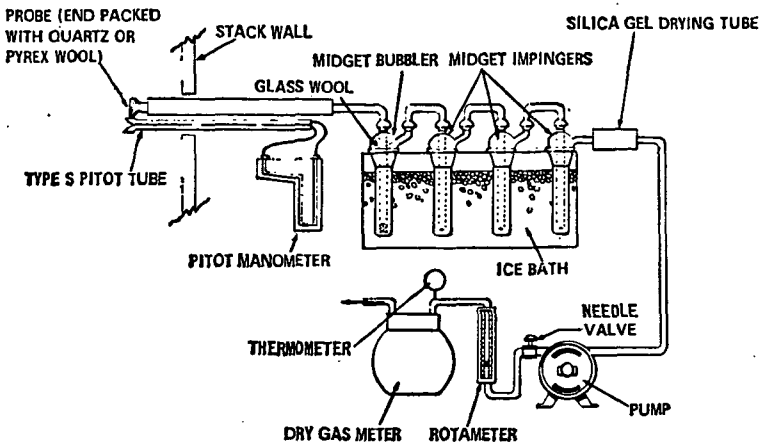

Figure 6-1. SO_2 sampling train.

2.3.1 Pipettes—Transfer type, 5 ml. and 10 ml. sizes (0.1 ml. divisions) and 25 ml. size (0.2 ml. divisions).

2.3.2 Volumetric flasks—50 ml., 100 ml., and 1,000 ml.

2.3.3 Burettes—5 ml. and 50 ml.

2.3.4 Erlenmeyer flask—125 ml.

3. *Reagents.*

3.1 Sampling.

3.1.1 Water—Deionized, distilled.

3.1.2 Isopropanol, 80%—Mix 80 ml. of isopropanol with 20 ml. of distilled water.

3.1.3 Hydrogen peroxide, 3%—dilute 100 ml. of 30% hydrogen peroxide to 1 liter with distilled water. Prepare fresh daily.

3.2 Sample recovery.

3.2.1 Water—Deionized, distilled.

3.2.2 Isopropanol, 80%.

3.3 Analysis.

3.3.1 Water—Deionized, distilled.

3.3.2 Isopropanol.

3.3.3 Thorin indicator—1-(o-arsonophenylazo)-2-naphthol-3,6-disulfonic acid, disodium salt (or equivalent). Dissolve 0.20 g. in 100 ml. distilled water.

3.3.4 Barium perchlorate (0.01 *N*)—Dissolve 1.95 g. of barium perchlorate $[Ba(ClO_4)_2 \cdot 3H_2O]$ in 200 ml. distilled water and dilute to 1 liter with isopropanol. Standardize with sulfuric acid. Barium chloride may be used.

3.3.5 Sulfuric acid standard (0.01 *N*)—Purchase or standardize to ±0.0002 *N* against 0.01N NaOH which has previously been standardized against potassium acid phthalate (primary standard grade).

4. *Procedure.*

4.1 Sampling.

4.1.1 Preparation of collection train. Pour 15 ml. of 80% isopropanol into the midget bubbler and 15 ml. of 3% hydrogen peroxide into each of the first two midget impingers. Leave the final midget impinger dry. Assemble the train as shown in Figure 6-1. Leak check the sampling train at the sampling site by plugging the probe inlet and pulling a 10 inches Hg vacuum. A leakage rate not in excess of 1% of the sampling rate is acceptable. Carefully release the probe inlet plug and turn off the pump. Place crushed ice around the impingers. Add more ice during the run to keep the temperature of the gases leaving the last impinger at 70° F. or less.

4.1.2 Sample collection. Adjust the sample flow rate proportional to the stack gas velocity. Take readings at least every five minutes and when significant changes in stack conditions necessitate additional adjustments in flow rate. To begin sampling, position the tip of the probe at the first sampling point and start the pump. Sample proportionally throughout the run. At the conclusion of each run, turn off the pump and record the final readings. Remove the probe from the stack and disconnect it from the train. Drain the ice bath and purge the remaining part of the train by drawing clean ambient air through the system for 15 minutes.

4.2 Sample recovery. Disconnect the impingers after purging. Discard the contents of the midget bubbler. Pour the contents of the midget impingers into a polyethylene shipment bottle. Rinse the three midget impingers and the connecting tubes with distilled water and add these washings to the same storage container.

4.3 Sample analysis. Transfer the contents of the storage container to a 50 ml. volumetric flask. Dilute to the mark with deionized, distilled water. Pipette a 10 ml. aliquot of this solution into a 125 ml. Erlenmeyer flask. Add 40 ml. of isopropanol and two to four drops of thorin indicator. Titrate to a pink endpoint using 0.01 *N* barium perchlorate. Run a blank with each series of samples.

5. *Calibration.*

5.1 Use standard methods and equipment which have been approved by the Administrator to calibrate the rotameter, pitot tube, dry gas meter, and probe heater.

5.2 Standardize the barium perchlorate against 25 ml. of standard sulfuric acid containing 100 ml. of isopropanol.

6. *Calculations.*

6.1 Dry gas volume. Correct the sample volume measured by the dry gas meter to standard conditions (70° F. and 29.92 inches Hg) by using equation 6-1.

$$V_{m_{std}} = V_m \left(\frac{T_{std}}{T_m}\right)\left(\frac{P_{bar}}{P_{std}}\right) = 17.71 \frac{°R}{in.\ Hg}\left(\frac{V_m P_{bar}}{T_m}\right) \quad \text{equation 6-1}$$

where:

$V_{m_{std}}$ = Volume of gas sample through the dry gas meter (standard conditions), cu. ft.

V_m = Volume of gas sample through the dry gas meter (meter conditions), cu. ft.

T_{std} = Absolute temperature at standard conditions, 530° R.

T_m = Average dry gas meter temperature, °R.

P_{bar} = Barometric pressure at the orifice meter, inches Hg.

P_{std} = Absolute pressure at standard conditions, 29.92 inches Hg.

6.2 Sulfur dioxide concentration.

$$C_{SO_2} = \left(7.05 \times 10^{-5} \frac{lb.\text{-}l.}{g.\text{-}ml.}\right) \frac{(V_t - V_{tb}) N \left(\frac{V_{soln}}{V_a}\right)}{V_{m_{std}}} \quad \text{equation 6-2}$$

where:

C_{SO_2} = Concentration of sulfur dioxide at standard conditions, dry basis, lb./cu. ft.

7.05×10^{-5} = Conversion factor, including the number of grams per gram equivalent of sulfur dioxide (32 g./g.-eq.), 453.6 g./lb., and 1,000 ml./l., lb.-l./g.-ml.

V_t = Volume of barium perchlorate titrant used for the sample, ml.

V_{tb} = Volume of barium perchlorate titrant used for the blank, ml.

N = Normality of barium perchlorate titrant, g.-eq./l.

V_{soln} = Total solution volume of sulfur dioxide, 50 ml.

V_a = Volume of sample aliquot titrated, ml.

$V_{m_{std}}$ = Volume of gas sample through the dry gas meter (standard conditions), cu. ft., see Equation 6-1.

7. *References.*

Atmospheric Emissions from Sulfuric Acid Manufacturing Processes, U.S. DHEW, PHS, Division of Air Pollution, Public Health Service Publication No. 999-AP-13, Cincinnati, Ohio, 1965.

Corbett, P. F., The Determination of SO_2 and SO_3 in Flue Gases, Journal of the Institute of Fuel, 24:237-243, 1961.

Matty, R. E. and E. K. Diehl, Measuring Flue-Gas SO_2 and SO_3, Power *101*:94-97, November, 1957.

Patton, W. F. and J. A. Brink, Jr., New Equipment and Techniques for Sampling Chemical Process Gases, J. Air Pollution Control Association, *13*, 162 (1963).

METHOD 7—DETERMINATION OF NITROGEN OXIDE EMISSIONS FROM STATIONARY SOURCES

1. *Principle and applicability.*

1.1 Principle. A grab sample is collected in an evacuated flask containing a dilute sulfuric acid-hydrogen peroxide absorbing solution, and the nitrogen oxides, except

METHOD 11

TESTS AND RESULTS

SUMMARY OF METHOD 11 TESTS AND RESULTS

It was necessary to evaluate Method 11 for use on the Claus plant tail gas before incineration, which contained up to about 1% H_2S during transient upsets, and normally operated in the 2000-ppm H_2S range at the selected test site.

A series of tests were run on gases containing from 200 to 9040 ppm hydrogen sulfide in nitrogen. Good results were obtained, as expected, for the gas containing 200 ppm; however, results for the gases containing higher concentrations (beyond that which may be determined using Method 11 unmodified) were unacceptably low. The data are presented and discussed, including a possible reason for unacceptable results.

TEST METHOD

The basic test used was Method 11, as given in the Federal Register, Volume 39, Number 47, pages 9321-9323.* Briefly, the method specifies that the gas to be analyzed be passed through a train of 5 midget impingers of 30-ml capacity each. The first is to contain 15 ml of freshly prepared 3% hydrogen peroxide, each of the next three is to contain 15 ml of cadmium hydroxide absorbing solution, and the last is to be empty. Gas is to be passed through the train at 1.13 l/min for a minimum of 10 minutes. The hydrogen sulfide is captured as cadmium sulfide. The sulfide is determined by adding the contents of the 3 absorbing impingers to 100 ml of acidified iodine solution. This process regenerates hydrogen sulfide which then reacts with iodine. After sufficient time has elapsed for all the hydrogen sulfide to react with iodine, the remaining

---

*These pages are attached.

iodine is titrated with thiosulfate to a starch endpoint. A blank is titrated similarly. From a knowledge of the amount of gas passed through the train and how much thiosulfate was consumed in each titration, the concentration of hydrogen sulfide in the gas may be calculated.

WORKING SOLUTIONS

Some care was exercised to ascertain that the reagents and solutions used were in satisfactory condition. Pre-standardized 0.1 N sodium thiosulfate solution was purchased. The standardization was checked against primary-standard-grade potassium dichromate and found to be as stated, within experimental error. Hundredth-normal (nominal) iodine solution was prepared and standardized daily. Although there are no restrictions stated in the Method concerning the lifetime of the cadmium hydroxide solution, only 21 days elapsed between the time the solution was prepared and the time the final test was run. Further, a duplicate test was run in one instance to assess the effect of the freshness of the absorbing solution.

MODIFICATIONS TO THE BASIC METHOD

Given the constraints that are specified in Method 11 concerning sampling rate and time, volume and normality of iodine solution, and assuming an ideal blank, the absolute maximum concentration of hydrogen sulfide that can be determined is about 530 ppm. However, the stream that was to be analyzed and the span gases that were to be used in instrument calibration contained approximately 5000 ppm hydrogen sulfide and 2500 ppm sulfur dioxide, and 9000 ppm hydrogen sulfide, respectively. Hence, the method could not be used without modification. By mutual agreement with the cognizant Project Technical Officer, it was agreed that the sampling time would be reduced to extend the upper limit of H_2S concentration theoretically detectable.

A volume of 0.0014 m^3 (0.05 cu ft) was judged to be about the smallest that could be read with accuracy on the dry gas meter that was available for

the tests. (The meter did comply with the specifications that were applicable to the unmodified Method 11). To be sure that no significant error was introduced by sampling this relatively small volume, the sampling time was measured to the nearest tenth second. After the sample was taken, but before the rotameter setting, temperature, or pressure changed significantly, the time required to pass a relatively large volume of ambient air (purge) through the system was also determined. A further crude check on the sampled volume was obtained in this manner by comparing times and indicated volumes.

Assuming that .0014 m^3 (0.05 cu ft) is the volume of gas that is sampled, and no other modifications are made to the procedure, then the highest concentration of hydrogen sulfide that can be determined is approximately 4250 ppm. Thus, in many of the tests discussed, not only was the smaller volume of gas employed, but additional iodine was used in the workup of the sample and blank as well. When the gas being sampled contained 4000 ppm or more hydrogen sulfide, additional impingers containing cadmium hydroxide were inserted into the sampling train to ascertain that all the hydrogen sulfide was scrubbed from the gas stream.

At the time the tests were run, questions arose concerning the tendency of the hydrogen peroxide in the first impinger to irreversibly remove hydrogen sulfide from the gas streams in which it was present at high concentrations. Thus, a few tests were run without hydrogen peroxide in the train. All the tests run in the program were run on gases that contained only hydrogen sulfide in the nitrogen, but in a few of the tests in which hydrogen peroxide was used a small amount of sulfuric acid was added to it to simulate the effect upon pH of passing a mixture containing sulfur dioxide through the train.

TEST GASES

A total of 15 tests were run on gases that contained from 200 to 9040 ppm hydrogen sulfide in nitrogen. Two of the gases (200 and 4000 ppm) were supplied by the gas blending facility of Beckman Instruments, Inc. The concentrations are established by controlling the pressure of each component during the blending operation. An accuracy of 2% is to be expected in this operation and that figure is appropriate for the gas containing 4000 ppm. However, two such operations were used in order to produce the gas containing 200 ppm. Hence, an accuracy of 4-5% is appropriate in that case. The remaining gases, 9000 and 9040 ppm, were supplied by an outside vendor--Liquid Carbonic. No data are available to indicate the accuracy of these numbers. In no case was an independently obtained, wet-chemical analysis available. However, the Houston Atlas, Inc., System indicated that the relative values of the various tanks were within a few percent of the values on the tank labels. Since the Houston Atlas System normally provides a linear output, its analysis is deemed to strongly support the conclusion that the Method 11 results on the high concentrations were erroneous.

TEST RESULTS

The data from the tests are presented in Table 17.

Runs 1 through 6 were made using the gas containing 4000 ppm hydrogen sulfide. In no case did the results approach the expected value. The results of runs 1, 2, and 3 were approximately 40% low. Omitting the hydrogen peroxide from the train, (runs 4 and 5) may have produced some benefit, but not nearly enough. Using acidified hydrogen peroxide (run 6) did not help; however, the results from runs 3, 5, and 6 do give a clue as to where the problem may lie. The fact that 3 impingers contain sufficient cadmium hydroxide to capture all the hydrogen sulfide that will react with 50 ml of iodine solution is implicit in the unmodified

Table 17. METHOD 11(H_2S) TEST RESULTS

Run #	1	2	3	4	5	6	7	8	9	10	11	12	13	14	15
Cylinder Contents, ppm	4000	4000	4000	4000	4000	4000	9040	9040	9040	90000	9000	9000	9000	200	200
Test Variation	Initial Test	Initial Test	Retest	No H_2O_2	No H_2O_2	Acidified H_2O_2	Initial Test	Initial Test	No H_2O_2	No H_2O_2	No H_2O_2	Acidified H_2O_2	Acidified H_2O_2	bench mark	Fresh absorbing solution
Date	3/6/75	3/6/76	3/19/75	3/18/75	3/25/75	3/25/75	3/11/75	3/13/75	3/14/75	3/20/75	3/21/75	3/21/75	3/21/75	3/26/75	3/25/75
Time	1100	1300	1700	1330	1227	1145	1630	0930	1600	1415	1530	1030	1400	0930	2030
Sample															
Time, Finish														0941	
Time, Start														0936	
Duration, Seconds	79.0	79.9	72.0	72.7	71.6	72.8	83.6	83.9	71.8	68.[illegible]	70.6	74.5	71.7		
Gas Meter, Finish, ft^3	0.69	0.25	0.40	0.88	0.05	0.35	0.65	1.00	0.05	0.10	0.35	0.75	0.55	1.06	1.05
Gas Meter, Start, ft^3	0.64	0.20	0.35	0.83	0.00	0.30	0.60	0.95		0.05	0.30	0.70	0.50	0.66	0.65
Temperature, Finish, °F	70	73	75	71	74	72	70	66	71	72	75	71	70	65	69.5
Temperature, Start, °F	69	73	75	70	73	72	70	66	71	72	75	71	70	63	68
Barometric Pressure, "Hg	29.66	29.67	29.63	29.78	29.51	29.51	29.43	29.80	29.65	29.62	29.66	29.72	29.71	29.50	29.39
Purge															
Time, Finish	1125			1355	1242	1216		1003				1055	1427		
Time, Start	1110			1340	1227	1201	1635	0950			1552	1040	1412		2047
Gas Meter, Finish, ft^3	1.02														
Gas Meter, Start, ft^3	0.82	0.29	0.50	0.00			0.73	0.00		0.15		0.95			
Timed Volume, ft^3		0.20	0.20	0.20	0.20	0.10	0.20		0.20	0.20		0.20			
Time, Seconds	339.3	322.9	289.4	304.8	284.5	144.7	333.8		282	286.6		297.8			
Computed Sample Time, Sec.	85	80.7	72.4	76.3	71.1	72.3	83.3		70.5	71.6		74.4			
Rotameter, ft^3/hr	2	2	2.4	2.4	2.4	2.4	2	2	2.4	2.4	2.4	2.4	2.4	2.4	2.4
Titrations															
I_3^- in Sample, ml	50	50	100	100	50	50	100	100	100	100		100		50	50
$S_2O_3^{-2}$ to Titrate, ml	19.30	20.65	71.38	64.60	16.49	16.50	33.16	31.96	28.35	34.25		76.76		26.73	26.50
I_3^- in Blank, ml	50	50	50	100	50	50	100	50	100	100				50	50
$S_2O_3^{-2}$ to Titrate, ml	49.01	48.42	49.64	99.75	49.19	49.19	97.85	50.56	97.90	98.51				48.23	48.85
I_3^- Standardization Volume, ml	25	25	25	25	25	25	25	25	25	25				25	25
$S_2O_3^{-2}$ to Titrate, ml	22.54 22.50 22.40	22.74 22.70 22.60	23.23 23.13 23.00	23.08 23.15	22.76 22.99 22.88	22.76 22.99 22.88	22.82 22.79 22.76	23.44 23.46 23.54	22.80 22.89	22.98 23.11 23.01				22.63 22.61	22.76 22.99 22.88
ppm, Method 11	2551	2400	2423	3012	2844	2835	5605	5873	5992	5553				229	241
Remarks	$1H_2O_2$ $6Cd(OH)_2$ 1 empty	$1H_2O_2$ $6Cd(OH)_2$ 1 empty	$1H_2O_2$ $6Cd(OH)_2$ 1 empty Slight yellow in #4 ($Cd(OH)_2$. None in #5.	$6Cd(OH)_2$ 1 empty	$6Cd(OH)_2$ 1 empty Slight yellow in#4 $Cd(OH)_2$. None in #5.	$1H_2O_2$ $6Cd(OH)_2$ 1 empty Slight yellow in #4 ($Cd(OH)_2$. None in #5	$1H_2O_2$ $6Cd(OH)_2$ 1 empty	$1H_2O_2$ $6Cd(OH)_2$ 1 empty	- $6Cd(OH)_2$ 1 empty	$7Cd(OH)_2$ 1 empty Slight yellow in #5 $Cd(OH)_2$. None in #6.	- $6Cd(OH)_2$ 1 empty Slight yellow in #4 $Cd(OH)_2$. None in #5.	$1H_2O_2$+ 2drops H* $6Cd(OH)_2$ 1 empty Slight yellow in #4 $Cd(OH)_2$. None in #5.	$1H_2O_2$+ 2drops H* $6Cd(OH)_2$ 1 empty Slight yellow in #4 $Cd(OH)_2$. None in #5.	$1H_2O_2$ $3Cd(OH)_2$ 1 empty Slight yellow in #3 $Cd(OH)_2$	$1H_2O_2$ $3Cd(OH)_2$ 1 empty Slight yellow in #3 $Cd(OH)_2$

Method 11. In runs 3, 5, and 6 no more than 35 ml of iodine solution was consumed by hydrogen sulfide, based on the amount of thiosulfate solution that was used in the titrations. However, in each of these runs there was a distinct yellow color in the fourth impinger of cadmium hydroxide--indicating that some hydrogen sulfide was carried beyond the third. Thus, there is some question as to how effectively the cadmium hydroxide scrubs hydrogen sulfide when the latter is present in relatively high concentration. The lack of an entry in this respect for runs 1, 2, and 4 indicates only that no notation was made in the log book. These runs were made early in the series, before this aspect of the significance of carryover was fully appreciated.

Runs that were made on the gas containing 9040 ppm produced results that were about 45% low regardless of whether hydrogen peroxide was used (runs 7 and 8) or not (run 9). There may have been carryover past the third impinger containing cadmium hydroxide in these runs.

Runs that were made on the gas containing 9000 ppm also produced unsatisfactory results. When no hydrogen peroxide was used, the result was about 45% low (run 10). Based on the appearance of the cadmium hydroxide that was used in run 11 (sam e conditions as run 10), an analysis would have produced results that were little or no better. Using acidified hydrogen peroxide (runs 12 and 13) likely produced worse results. Based on the amount of thiosulfate solution consumed in the titration of run 12, the analysis would have been low by an additional factor of two. In all cases, there was carryover past the third impinger containing cadmium hydroxide.

A benchmark test was run on gas containing 200 ppm hydrogen sulfide to establish that the techniques involved were being performed properly. The test (run 14) was performed in strict accordance with Method 11. The result, 229 ppm, is perhaps a bit farther from 200 ppm than would have been preferred, but it was the first result that was higher than or

even reasonably near the expected value. The test was repeated with fresh absorbing solution (run 15) and a value of 241 ppm was obtained. The mean of the two values, 235 ppm, and the range, ±6 ppm, are considered satisfactory.

10. *Bibliography.*

10.1 McElroy, Frank, The Intertech NDIR-CO Analyzer, Presented at 11th Methods Conference on Air Pollution, University of California, Berkeley, Calif., April 1, 1970.

10.2 Jacobs, M. B., et al., Continuous Determination of Carbon Monoxide and Hydrocarbons in Air by a Modified Infrared Analyzer, J. Air Pollution Control Association, 9(2):110–114, August 1959.

10.3 MSA LIRA Infrared Gas and Liquid Analyzer Instruction Book, Mine Safety Appliances Co., Technical Products Division, Pittsburgh, Pa.

10.4 Models 215A, 315A, and 415A Infrared Analyzers, Beckman Instruments, Inc., Beckman Instructions 1635-B, Fullerton, Calif., October 1967.

10.5 Continuous CO Monitoring System, Model A5611, Intertech Corp., Princeton, N.J.

10.6 UNOR Infrared Gas Analyzers, Bendix Corp., Ronceverte, West Virginia.

ADDENDA

A. Performance Specifications for NDIR Carbon Monoxide Analyzers.

Range (minimum)	0–1000ppm.
Output (minimum)	0–10mV.
Minimum detectable sensitivity	20 ppm.
Rise time, 90 percent (maximum)	30 seconds.
Fall time, 90 percent (maximum)	30 seconds.
Zero drift (maximum)	10% in 8 hours.
Span drift (maximum)	10% in 8 hours.
Precision (minimum)	± 2% of full scale.
Noise (maximum)	± 1% of full scale.
Linearity (maximum deviation)	2% of full scale.
Interference rejection ratio	CO_2—1000 to 1, H_2O—500 to 1.

B. *Definitions of Performance Specifications.*

Range—The minimum and maximum measurement limits.

Output—Electrical signal which is proportional to the measurement; intended for connection to readout or data processing devices. Usually expressed as millivolts or milliamps full scale at a given impedance.

Full scale—The maximum measuring limit for a given range.

Minimum detectable sensitivity—The smallest amount of input concentration that can be detected as the concentration approaches zero.

Accuracy—The degree of agreement between a measured value and the true value; usually expressed as ± percent of full scale.

Time to 90 percent response—The time interval from a step change in the input concentration at the instrument inlet to a reading of 90 percent of the ultimate recorded concentration.

Rise Time (90 percent)—The interval between initial response time and time to 90 percent response after a step increase in the inlet concentration.

Fall Time (90 percent)—The interval between initial response time and time to 90 percent response after a step decrease in the inlet concentration.

Zero Drift—The change in instrument output over a stated time period, usually 24 hours, of unadjusted continuous operation when the input concentration is zero; usually expressed as percent full scale.

Span Drift—The change in instrument output over a stated time period, usually 24 hours, of unadjusted continuous operation when the input concentration is a stated upscale value; usually expressed as percent full scale.

Precision—The degree of agreement between repeated measurements of the same concentration, expressed as the average deviation of the single results from the mean.

Noise—Spontaneous deviations from a mean output not caused by input concentration changes.

Linearity—The maximum deviation between an actual instrument reading and the reading predicted by a straight line drawn between upper and lower calibration points.

METHOD 11—DETERMINATION OF HYDROGEN SULFIDE EMISSIONS FROM STATIONARY SOURCES

1. *Principle and applicability.*

1.1 *Principle.* Hydrogen sulfide (H_2S) is collected from the source in a series of midget impingers and reacted with alkaline cadmium hydroxide [$Cd(OH)_2$] to form cadmium sulfide (CdS). The precipitated CdS is then dissolved in hydrochloric acid and absorbed in a known volume of iodine solution. The iodine consumed is a measure of the H_2S content of the gas. An impinger containing hydrogen peroxide is included to remove SO_2 as an interfering species.

1.2 *Applicability.* This method is applicable for the determination of hydrogen sulfide emissions from stationary sources only when specified by the test procedures for determining compliance with the new source performance standards.

2. *Apparatus.*

2.1 *Sampling train.*

2.1.1 *Sampling line*—6- to 7-mm (¼-inch) Teflon[1] tubing to connect sampling train to sampling valve, with provisions for heating to prevent condensation. A pressure reducing valve prior to the Teflon sampling line may be required depending on sampling stream pressure.

2.1.2 *Impingers*—Five midget impingers, each with 30-ml capacity, or equivalent.

2.1.3 *Ice bath container*—To maintain absorbing solution at a constant temperature.

2.1.4 *Silica gel drying tube*—To protect pump and dry gas meter.

2.1.5 *Needle valve, or equivalent*—Stainless steel or other corrosion resistant material, to adjust gas flow rate.

2.1.6 *Pump*—Leak free, diaphragm type, or equivalent, to transport gas. (Not required if sampling stream under positive pressure.)

2.1.7 *Dry gas meter*—Sufficiently accurate to measure sample volume to within 1 percent.

2.1.8 *Rate meter*—Rotameter, or equivalent, to measure a flow rate of 0 to 3 liters per minute (0.1 ft^3/min).

2.1.9 *Graduated cylinder*—25 ml.

2.1.10 *Barometer*—To measure atmospheric pressure within ±2.5 mm (0.1 in.) Hg.

2.2 *Sample Recovery.*

2.2.1 *Sample container*—500-ml glass-stoppered iodine flask.

2.2.2 *Pipette*—50-ml volumetric type.

2.2.3 *Beakers*—250 ml.

2.2.4 *Wash bottle*—Glass.

2.3 *Analysis.*

2.3.1 *Flask*—500-ml glass-stoppered iodine flask.

2.3.2 *Burette*—One 50 ml.

2.3.2 *Flask*—125-ml conical.

3. *Reagents.*

3.1 *Sampling.*

3.1.1 *Absorbing solution*—Cadmium hydroxide ($Cd(OH)_2$)—Mix 4.3 g cadmium sulfate hydrate (3 $CdSO_4 \cdot 8H_2O$) and 0.3 g of sodium hydroxide (NaOH) in 1 liter of distilled water (H_2O). Mix well.

Note: The cadmium hydroxide formed in this mixture will precipitate as a white suspension. Therefore, this solution must be thoroughly mixed before using to ensure an even distribution of the cadmium hydroxide.

3.1.2 *Hydrogen peroxide, 3 percent*—Dilute 30 percent hydrogen peroxide to 3 percent as needed. Prepare fresh daily.

3.2 *Sample recovery.*

3.2.1 *Hydrochloric acid solution (HCl), 10 percent by weight*—Mix 230 ml of concentrated HCl (specific gravity 1.19) and 770 ml of distilled H_2O.

3.2.2 *Iodine solution, 0.1 N*—Dissolve 24 g potassium iodide (KI) in 30 ml of distilled H_2O in a 1-liter graduated cylinder. Weigh 12.7 g of resublimed iodine (I_2) into a weighing bottle and add to the potassium iodide solution. Shake the mixture until the iodine is completely dissolved. Slowly dilute the solution to 1 liter with distilled H_2O, with swirling. Filter the solution, if cloudy, and store in a brown glass-stoppered bottle.

3.2.3 *Standard iodine solution, 0.01 N*—Dilute 100 ml of the 0.1 *N* iodine solution in a volumetric flask to 1 liter with distilled water.

Standardize daily as follows: Pipette 25 ml of the 0.01 *N* iodine solution into a 125-ml conical flask. Titrate with standard 0.01 *N* thiosulfate solution (see paragraph 3.3.2) until the solution is a light yellow. Add a few drops of the starch solution and continue titrating until the blue color just disappears. From the results of this titration, calculate the exact normality of the iodine solution (see paragraph 5.1).

3.2.4 *Distilled, deionized water.*

3.3 *Analysis.*

3.3.1 *Sodium thiosulfate solution, standard 0.1 N*—For each liter of solution, dissolve 24.8 g of sodium thiosulfate ($NA_2S_2O_3 \cdot 5H_2O$) in distilled water and add 0.01 g of anhydrous sodium carbonate (Na_2CO_3) and 0.4 ml of chloroform ($CHCl_3$) to stabilize. Mix thoroughly by shaking or by aerating with nitrogen for approximately 15 minutes, and store in a glass-stoppered glass bottle.

Standardize frequently as follows: Weigh into a 500-ml volumetric flask about 2 g of potassium dichromate ($K_2Cr_2O_7$) weighed to the nearest milligram and dilute to the 500-ml mark with distilled H_2O. Use dichromate which has been crystallized from distilled water and oven-dried at 182°C to 199°C (360°F to 390°F). Dissolve approximately 3 g of potassium iodide (KI) in 50 ml of distilled water in a glass-stoppered, 500-ml conical flask, then add 5 ml of 20-percent hydrochloric acid solution. Pipette 50 ml of the dichromate solution into this mixture. Gently swirl the solution once and allow it to stand in the dark for 5 minutes. Dilute the solution with 100 to 200 ml of distilled water, washing down the sides of the flask with part of the water. Swirl the solution slowly and titrate with the thoiusulfate solution until the solution is light yellow. Add 4 ml of starch solution and continue with a slow titration with the thiosulfate until the bright blue color has disappeared and only the pale green color of the chromic ion remains. From this titration, calculate the exact normality of the sodium thiosulfate solution (see paragraph 5.2).

3.3.2 *Sodium thiosulfate solution, standard 0.01 N*—Pipette 100 ml of the standard 0.1 *N* thiosulfate solution into a volumetric flask and dilute to one liter with distilled water.

[1] Mention of trade names or specific products does not constitute endorsement by the Environmental Protection Agency.

3.3.3 *Starch indicator solution*—Suspend 10 g of soluble starch in 100 ml of distilled water and add 15 g of potassium hydroxide pellets. Stir until dissolved, dilute with 900 ml of distilled water, and let stand 1 hour. Neutralize the alkali with concentrated hydrochloric acid, using an indicator paper similar to Alkacid test ribbon, then add 2 ml of glacial acetic acid as a preservative.

Test for decomposition by titrating 4 ml of starch solution in 200 ml of distilled water with 0.01 *N* iodine solution. If more than 4 drops of the 0.01 *N* iodine solution are required to obtain the blue color, make up a fresh starch solution.

4. *Procedure.*

4.1 *Sampling.*

4.1.1 Assemble the sampling train as shown in Figure 11-1, connecting the five midget impingers in series. Place 15 ml of 3 percent hydrogen peroxide in the first impinger. Place 15 ml of the absorbing solution in each of the next three impingers, leaving the fifth dry. Place crushed ice around the impingers. Add more ice during the run to keep the temperature of the gases leaving the last impinger at about 20°C (70°F), or less.

4.1.2 Purge the connecting line between the sampling valve and the first impinger. Connect the sample line to the train. Record the initial reading on the dry gas meter as shown in Table 11-1.

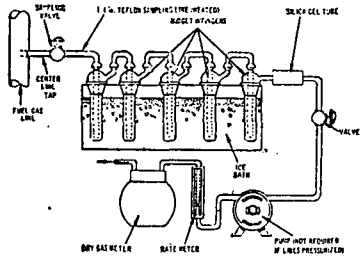

Figure 11-1. H_2S sampling train.

TABLE 11-1.—*Field data*

Location ---------- Comments:

Test ----------
Date ----------
Operator ----------
Barometric pressure--

Clock time	Gas volume through meter (V_m), liters (cubic feet)	Rotameter setting, Lpm (cubic feet per minute)	Meter temperature, ° C (° F)

4.1.3 Open the flow control valve and adjust the sampling rate to 1.13 liters per minute (0.04 cfm). Read the meter temperature and record on Table 11-1.

4.1.4 Continue sampling a minimum of 10 minutes. If the yellow color of cadmium sulfide is visible in the third impinger, analysis should confirm that the applicable standard has been exceeded. At the end of the sample time, close the flow control valve and read the final meter volume and temperature.

4.1.5 Disconnect the impinger train from the sampling line. Purge the train with clean ambient air for 15 minutes to ensure that all H_2S is removed from the hydrogen peroxide. Cap the open ends and move to the sample clean-up area.

4.2 *Sample recovery.*

4.2.1 Pipette 50 ml of 0.01 *N* iodine solution into a 250-ml beaker. Add 50 ml of 10 percent HCl to the solution. Mix well.

4.2.2 Discard the contents of the hydrogen peroxide impinger. Carefully transfer the contents of the remaining four impingers to a 500-ml iodine flask.

4.2.3 Rinse the four absorbing impingers and connecting glassware with three portions of the acidified iodine solution. Use the entire 100 ml of acidified iodine for this purpose. Immediately after pouring the acidified iodine into an impinger, stopper it and shake for a few moments before transferring the rinse to the iodine flask. Do not transfer any rinse portion from one impinger to another; transfer it directly to the iodine flask. Once acidified iodine solution has been poured into any glassware containing cadmium sulfide sample, the container must be tightly stoppered at all times except when adding more solution, and this must be done as quickly and carefully as possible. After adding any acidified iodine solution to the iodine flask, allow a few minutes for absorption of the H_2S into the iodine before adding any further rinses.

4.3.2 Titrate the blanks in the same manner as the samples.

4.2.4 Follow this rinse with two more rinses using distilled water. Add the distilled water rinses to the iodine flask. Stopper the flask and shake well. Allow about 30 minutes for absorption of the H_2S into the iodine, then complete the analysis titration.

Caution: Keep the iodine flask stoppered except when adding sample or titrant.

4.2.5 Prepare a blank in an iodine flask using 45 ml of the absorbing solution, 50 ml of 0.01 *N* iodine solution, and 50 ml of 10 percent HCl. Stopper the flask, shake well and analyze with the samples.

4.3 *Analysis.*

Note: This analysis titration should be conducted at the sampling location in order to prevent loss of iodine from the sample. Titration should never be made in direct sunlight.

4.3.1 Titrate the solution in the flask with 0.01 *N* sodium thiosulfate solution until the solution is light yellow. Add 4 ml of the starch indicator solution and continue titrating until the blue color just disappears.

5. *Calculations.*

5.1 *Normality of the standard iodine solution.*

$$N_I = \frac{N_T V_T}{V_I} \qquad \text{equation 11-1}$$

where:

N_I = normality of iodine, g-eq/liter.
V_I = volume of iodine used, ml.
N_T = normality of sodium thiosulfate, g-eq/liter.
V_T = volume of sodium thiosulfate used, ml.

5.2 *Normality of the standard thiosulfate sulution.*

$$N_T = 2.04\,\frac{W}{V_T} \qquad \text{equation 11-2}$$

where:

W = weight of $K_2Cr_2O_7$ used, g.
V_T = volume of $Na_2S_2O_3$ used, ml.
N_T = normality of standard thiosulfate solution, g-eq/liter.
2.04 = conversion factor

$$= \frac{(6 \text{ eq } I_2/\text{mole } K_2Cr_2O_7)\ (1{,}000 \text{ ml/l})}{(294.2 \text{ g } K_2Cr_2O_7/\text{mole})\ (10 \text{ aliquot factor})}.$$

5.3 *Dry gas volume.* Correct the sample volume measured by the dry gas meter to standard conditions [21°C(70°F)] and 760 mm (29.92 inches) Hg] by using equation 11-3.

$$V_{m_{std}} = V_m \left(\frac{T_{std}}{T_m}\right)\left(\frac{P_{bar}}{P_{std}}\right) \qquad \text{equation 11-3}$$

where:

$V_{m_{std}}$ = volume at standard conditions of gas sample through the dry gas meter, standard liters (scf).
V_m = volume of gas sample through the dry gas meter (meter conditions), liters (cu. ft.).
T_{std} = absolute temperature at standard conditions, 294°K (530°R).
T_m = average dry gas meter temperature, °K (°R).
P_{bar} = barometric pressure at the orifice meter, mm Hg (in. Hg).
P_{std} = absolute pressure at standard conditions, 760 mm Hg (29.92 in. Hg).

5.4 *Concentration of H_2S.*—Calculate the concentration of H_2S in the gas stream at standard conditions using equation 11-4:

$$C_{H_2S} = \frac{K[(V_I N_I - V_T N_T)_{sample} - (V_I N_I - V_T N_T)_{blank}]}{V_{m_{std}}}$$

where (metric units):

C_{H_2S} = concentration of H_2S at standard conditions, mg/dscm
K = conversion factor = 17.0×10^3

$$= \frac{(34.07 \text{ g mole } H_2S)(1{,}000\ l/m^3)(1{,}000 \text{ mg/g})}{(1{,}000 \text{ ml/l})(2H_2S \text{ eq/mole})}$$

V_I = volume of standard iodine solution, ml.
N_I = normality of standard iodine solution, g-eq/liter.
V_T = volume of standard sodium thiosulfate solution, ml.
N_T = normality of standard sodium thiosulfate solution, g-eq/liter.
$V_{m_{std}}$ = dry gas volume at standard conditions, liters.

where (English units):

$$K=0.263=\frac{17.0(15.43\ gr/g)}{(1{,}000\ l/m^3}$$

V_{std}=scf.
C_{H_2S}=gr/dscf.

6. *References.*

6.1 Determination of Hydrogen Sulfide, Ammoniacal Cadmium Chloride Method, API Method 772-54. In: Manual on Disposal of Refinery Wastes, Vol. V: Sampling and Analysis of Waste Gases and Particulate Matter, American Petroleum Institute, Washington, D.C., 1954.

6.2 Tentative Method for Determination of Hydrogen Sulfide and Mercaptan Sulfur in Natural Gas, Natural Gas Processors Association, Tulsa, Oklahoma, NGPA Publication No. 2265-65, 1965.

[FR Doc.74-4784 Filed 3-7-74;8:45 am]

APPENDIX E

MISCELLANEOUS TESTS, CALCULATIONS, AND RESULTS

CONTENTS

		Page
1.0	Direct Measurement of SO_2 Lost in Condensed Water	169
2.0	Analytical Derivation of SO_2 Losses into Condensate	170
3.0	Method 6 Analysis of Sample Delivered by Refrigerated Condensor and Permeation Dryer Systems.	172
4.0	Independent Verification of Linearity of Several Monitors	174
5.0	Disc Diluter System Calibration and Testing	176
6.0	Preliminary Method 6 Correlation Test and Results	179
7.0	Computer Programs Used in Reduction of Data	179

1.0 DIRECT MEASUREMENT OF SO_2 LOST IN CONDENSED WATER

During the work at the power plant site, a few drops of condensate normally accumulated in the interconnection between the heated probe used for collecting Method 6 samples and the cooled sampling impinger train. Several tests were performed to directly determine the maximum error that loss of SO_2 into this condensate might produce. First, a blank Method 6 analysis was performed using ambient air. The result indicated that the ambient air SO_2 concentration was negligible. Specifically, less than one drop of titrant was required *versus* a normal range of 6 to 10 ml of titrant for the stack gas (about 200 ppm SO_2) analysis. The second test involved collection of the condensed water at the end of one sample collection run prior to connecting a second absorber train for a second run. The condensate was collected in a spare impinger by tilting and tapping the probe.

Each of three samples collected in this manner was titrated. The results were calculated on the basis of equivalent ppm SO_2 in 0.028 m^3 (1 cu ft) of sample gas, which was the normal sample size for Method 6 analyses. The results of these three titrations were 5, 4, and 3 ppm SO_2 equivalent. The corresponding Method 6 results for the samples collected as the condensate accumulated were 80 (erroneous due to leaking stopcock), 180, and 219 ppm SO_2. The Method 6 results would have been about 2% higher if the probe condensate had been included in the collected samples. As performed, the titration included H_2SO_4 as well as SO_2 in the condensate. Therefore, direct inclusion of the condensate in the sample could lead to high SO_2 measurements (due to H_2SO_4), while noninclusion of the SO_2 dissolved in the condensate would cause low indications of SO_2. If the condensate had been delivered to the first impinger before air purging, the H_2SO_4 would have been trapped while the SO_2 would have been carried over into the

absorbing impinger during the air purge step, resulting in a correct analysis. In any event, these results indicate that the error due to neglecting the possible loss of SO_2 in the condensate could not have been greater than 2% of the amount reported.

2.0 ANALYTICAL DERIVATION OF SO_2 LOSSES INTO CONDENSATE

In support of the experimental measurement of SO_2 lost in condensed water in the Method 6 sampling probe reported in Paragraph 1.0 of this appendix, a generalized equation was derived for estimating the maximum error in measured concentration of any gaseous sample constituent from this source, applicable for any condensor method of drying. The loss of SO_2 predicted for the prevailing power plant water loading was consistent with the experimental results reported in Paragraph 1.0. The derivation and an example calculation for SO_2 are given in the following paragraphs.

The amount of any gas that can be dissolved in a given amount of water is simply proportional to the solubility constant of the gas in question (by definition of solubility constant). The solubility constant for all gases is temperature dependent, and for acid (and basic) gases it is also pH dependent. When more than one acid gas is involved, the pH change due to one acid (or basic) gas affects the solubility of the others. The gas that is the anhydride of the strongest acid will dominate for roughly equal concentrations. For example, the formation of H_2SO_3 due to 500 ppm of SO_2 may be expected to lower the pH of the condensate enough to significantly reduce the solubility of CO_2 in the condensate. For much larger concentrations of CO_2 than SO_2, the solubility of both gases will be lower than that for either gas alone. While a general case, multiple acid gas constituent derivation is possible, it is sufficient for a worst-case estimate of loss of any one acid-gas constituent to assume that it is the only acid gas present--which maximizes the solubility in water. For this reason, the following derivation applies to any gas (such as oxygen) as well as to the maximum loss for gases that react with water (such as SO_2, CO_2, and NH_3).

The amount of water condensed from a given volume of sample is given by

$$V_w = \frac{(F_{ws}-F_{wc})}{1-(F_{ws}-F_{wc})} \times V_s \text{ (liters)} \times \frac{18 \text{ ml } H_2O}{22.4 \text{ liters vapor}} \times \frac{P_s(\text{atm})}{1 \text{ atm}} \times \frac{273(K)}{T_s(K)}$$

where

V_w = volume of condensed water in milliliters

V_s = volume of "dry" sample collected in liters

F_{ws} = mole fraction of water in sample

F_{wc} = mole fraction of water in sample leaving condensor

T_s = temperature of sample entering probe (and condensor)

P_s = total pressure of sample entering probe (and condensor)

The volume of acid gas lost in this condensate (worst case) is as follows:

$$V_{gl}(\text{ml}) = V_w(\text{ml}) \times K(T) \frac{(\text{ml gas})}{(\text{ml water}\cdot\text{atm})} \times F_g \times P_s(\text{atm})$$

where

V_{gl} = volume of gas dissolved in condensate (STP)

$K_{(T)}$ = solubility of gas in water in ml (STP) per ml water at one atmosphere partial pressure of the gas in question, and at the temperature, T, of the condensor (condensate).

F_g = mole fraction of gas = concentration (ppm) x 10^{-6}

P_s is assumed to be ambient atmospheric pressure and equal for sample entering the probe, condensor, and flowmeter. The total volume of gas that the original sample contains is as follows:

$$V_{gt}(\text{ml}) = \frac{F_g}{1(F_{ws}-F_{wc})} \times V_s \text{ (liters)} \times \frac{P_g(\text{atm})}{1(\text{atm})} \times \frac{273K}{T_s(K)} \times \frac{10^3 \text{ ml}}{\text{liter}}$$

The fractional loss of gas in the condensate is given by the ratio V_{gl}/V_{gt} which, by combination of the above equations, yields the following:

$$Q_{gl} \leq 8 \times 10^{-4} \ (F_{ws}-F_{wc}) \ K(T) \frac{(\text{ml gas})}{(\text{ml water} \cdot \text{atm})}$$

where Q_{gl} is the fractional quantity of gas lost in the condensate.

It follows, therefore, that the relative error in determining gas concentrations due to loss by solution in condensed water depends only upon the initial and final water mole fractions and upon the solubility of the gas of interest. The relative error is independent of the sample size, temperature, pressure, and the mole fraction of the gas of interest (under the assumed sampling conditions).

The solubility of SO_2 being given in handbook tables as about 80 ml (STP) per (ml water x atmosphere), the above equation predicts that the maximum error in SO_2 determinations for 13% water vapor loading (the value prevailing at the power plant site) is 0.83%. This prediction is consistent with the experimental results reported in Paragraph 1.0.

3.0 METHOD 6 ANALYSIS OF SAMPLE DELIVERED BY REFRIGERATED CONDENSOR AND PERMEATION DRYER SYSTEMS

A secondary objective of the Field Test Work Plan was to acquire as much supportive data as possible. In particular, it was desirable that Method 6 analyses of the samples delivered by the two dry-sample sampling interface systems under evaluation be directly compared to Method 6 analyses of samples obtained through the manual probe which was installed specifically for collecting Method 6 samples. Unfortunately, only one Method 6 impinger train was available, which made it impossible to obtain samples that correlated in time. However, the power plant stack gas SO_2 content was quite stable with time during long periods of each day, justifying serial collection of samples for this purpose. Consequently, when the

work load permitted, the test described in the following paragraphs was performed.

At the end of the power plant site evaluation Method 6 samples were collected through the refrigerated condensor system and the reflux-probe-permeation dryer sampling system (one each). The purpose of this test was to acquire direct comparative data of the two instrument sampling systems against the manual Method 6 probe, which was almost entirely glass. Unfortunately, a glass part of the Method 6 sampling train was accidentally broken before the manual sample was acquired, making it impossible to achieve the major experimental objective.

The Method 6 analysis of the samples collected indicated 157 ppm SO_2 for each sampling system. Only one sample for each system was taken, giving the results questionable significance; however, the Method 6 sample collection technique and, therefore, the Method 6 test results, had become reasonably reliable, improving the confidence level for single determinationa. The lack of a large difference between the results for the two radically different sampling systems was consistent with the generally good agreement between the SO_2 values determined by the two (different type) monitors throughout the test period. This result was also consistent with the observation that both monitors gave similar calibration results regardless of whether the zero and calibration gases were introduced immediately before the analyzers, or within the heated sampling-interface housings mounted on the stack.

It is concluded that no significant difference in SO_2 concentration exists for samples obtained through refrigerated condensors and through permeation dryers.

4.0 INDEPENDENT VERIFICATION OF LINEARITY OF SEVERAL MONITORS

During the laboratory familiarization phase, a gas blending system was used. This system is a duplicate of a system fabricated for the EPA under separate contract. It was possible to make known blends of nitrogen (or zero air) with tank gas to verify linearity of response (within several percent, at least) of the various analyzers. Once linearity of any analyzer was established, it was possible to determine the relative concentrations of all tank gases (within the validated range) with respect to an arbitrarily chosen mixture. This technique provided an independent means of assessing the quality of Method 6 determinations being performed on tank gases as part of the training and familiarization work.

Specifically, leaks in the Method 6 sampling train produced some preliminary analyses of tanks indicating concentration ratios that were inconsistent with the ratios determined by linear instruments. Elimination of the inconsistency by finding and correcting the leaks provided a high level of confidence in the absolute accuracy of the Method 6 determinations by which the tank mixtures were eventually calibrated.

Troubleshooting of the Meloy Analyzer was also greatly facilitated by use of the gas-blending system for verification of linearity. The Meloy circuitry provided a logarithmic output covering many decades of sulfur concentration, followed by a linearized output of 0 to 1 ppm for the diluted sample, corresponding to several hundred ppm SO_2 input to the Dyfusatron. When intermittent failures plus abnormally large thermal errors developed, it was possible to establish that the linearized output was still basically linear in spite of the instabilities of the output. The Meloy output slope changed intermittently, but not the intercept or linearity.

Unfortunately, problems developed with the blender when the Houston-Atlas System was being tested. This fact, coupled with the inability to employ

Method 11 for absolute determinations of the concentrations of H_2S in the mixed tanks, resulted in serious compromises in the quality of the evaluation testing of the Houston-Atlas System.

The gas blender was employed in calibration of the Dynasciences Model SS-310 for use with the Disc Diluter. While the Disc Diluter Model SS-310 System could have been calibrated empirically (only), an absolute calibration of the Model SS-310 coupled with the established dilution ratio of the Disc Diluter made it possible to perform a Disc Diluter leakage error test by comparing actual output *versus* theoretical output for a known sample entering the Disc Diluter. (The results of this test are given in Paragraph 5.0 of this Appendix).

Finally, the Beckman NDIR Analyzer had a linearized output, and it would have been possible to adjust the linearizing board to provide exact agreement with the three gases used for calibration and linearity testing. However, this would have compromised the objectives of the evaluation, since the normal method of adjustment utilizes the original nonlinear calibration curve included in the instruction manual of each NDIR analyzer. Accordingly, the NDIR was linearized as it would normally be for a typical customer. Any inaccuracy in the gases used by the Beckman Laboratory would, therefore, cause nonlinearity in the output of the NDIR analyzer evaluated. This factor may account for the failure of the NDIR to meet the EPA-650/2-74-013 requirements in the pre-Claus Plant installation test, but it is also possible that the accuracy with which the standard gases were determined was marginal. This explanation is suggested by the failure of all three monitors (for SO_2) to pass this particular test, but instabilities of the Meloy Defusatron (which affected two of the three analyzers) clouded the issue.

5.0 DISC DILUTER SYSTEM CALIBRATION AND TESTING

Several significant tests and the results obtained are documented here since they are believed to be more indicative of the performance of the Disc Diluter than were those obtained in the field tests, during which repeated mechanical drive failures occurred, resulting in termination of the effort.

As discussed in Paragraph 4.0 of this Appendix, a gas blending technique was employed to calibrate the 0-10 ppm range of the Dynascience Model SS-310 on a calibration gas which was to be employed in field testing (approximately 450 ppm SO_2 in N_2). The absolute error of this calibration was estimated to be less than 5%. With the aid of a stopwatch for timing a number of revolutions, the rotational speed of the Disc Diluter was adjusted to the desired value. To avoid a time consuming, precise, measurement of the volume of the holes in the disc, the dilution ratio

employed was based upon that given in the Monsanto Research Corporation Instructions. The flow rate of carrier gas was verified for one setting of the flowmeter by using the dry gas meter that was used for Method 6 testing. Assigning another probable error of about 5% in the dilution ratio seems reasonable, resulting in a probable error in the Model SS-310 theoretical output of about 10%.

The calibration gas was then delivered to the Disc Diluter and the thrust loading on the disc was increased in steps until further increases made little difference in the output of the Model SS-310. It was found that the speed of rotation decreased noticeably as the analyzer output reached the zero-slope condition, but the speed control was reset to maintain a constant dilution ratio. The Model SS-310 output increased with disc tension and became less noisy until it reached a plateau.

The result is interpreted to mean that the leakage of calibration gas out of, and/or air into, the diluted sample became approximately zero as the disc thrust loading was increased. It is considered significant that the Model SS-310 output was approximately 10% below the theoretical value under these conditions, which is probably within the uncertainty of the theoretical value. Furthermore, the same result was obtained with the probe out of the stack at the power plant site, the only additional correction required being for the effect of barometric pressure (altitude) upon the system calibration.

When the thrust loading appeared to be correctly set, it was found that the disc friction produced heating that resulted in excessive thrust loading after operating for about fifteen minutes. At this time, the disc tension was backed off to obtain smooth operation, without a significant increase in leakage. This suggested that it might be necessary to set the disc tension on the low side when out of the stack to achieve proper tension when it reached stack gas temperature. It was believed that a reasonable amount of trial-and-error adjustment at the test site would suffice.

The calibration and linearity test was performed with the Disc Diluter adjusted as described above, but with the Model SS-310 span readjusted to provide a 0-500 ppm range for the system. Under these conditions the system passed the test.

The next test was intended to verify that the effect of temperature upon dilution ratio was that predictable from the gas law when leakage was eliminated. A rather peculiar thermal effect was shown by curves included in the Monsanto Research Instructions. The assumption here was, of course, that leakage accounted for the effect observed in the tests conducted by Monsanto, and that leakage effects would be minimized in the current test.

With the Disc Diluter operating in a stable manner, an ordinary laboratory "heat gun" was used to slowly elevate the temperature of the entire Disc Diluter probe, while the carrier air flow rate (measured at room temperature) was maintained constant. After heating, the probe temperature was allowed to stabilize for a few minutes to eliminate thermal gradients. The output decreased in accordance with the gas law prediction within the limits of uncertainty of the actual probe temperature, which could not be precisely determined with available equipment. The law predicts that the effective dilution ratio decreases with increasing sample (or calibration gas) temperature when the carrier flow rate (measured at ambient temperature) remains constant. The relationship is as follows:

$$D(T) = D(A) \times \frac{T_a}{T_p}$$

where $D(T)$ = dilution ratio for sample at temperature T_p

$D(A)$ = dilution ratio for sample at ambient temperature

T_a = ambient temperature (at which probe dilution factor is known)

T_p = temperature of probe and of sample or calibration gas

Finally, it should be noted that this change in dilution ratio applies when the probe and monitor are calibrated with the probe at ambient temperature and then used at a different temperature. Provided the calibration gas flow rate and the probe heat transfer characteristics are such that the calibration gas reaches stack (and probe) temperature before it enters the disc, the same dilution ratio change will occur for both. For *in-situ* calibration, therefore, the monitor span adjustment that calibrates the system correctly on calibration gas will provide correct analysis of the sample with no further adjustment or correction. For such *in situ* calibration, therefore, the above temperature-dilution

ratio function simply predicts the difference in sensitivity for stack gas temperature variations after calibration at any particular stack temperature, T_a. This entire discussion assumes that there are no additional errors due to leakage of the disc, or due to changes in leakage with temperature.

6.0 PRELIMINARY METHOD 6 CORRELATION TEST AND RESULTS

This section contains the correlation test results obtained with the Disc Diluter and two other systems in three preliminary tests performed at the Power Plant site on 26 November 1974. The digital data acquisition system was down at the time due to a failure of the E-A D-2020 Data Logger. One of two dual Texas Instruments, Inc., analog recorders was also down due to a stripped chart drive gear train. The Meloy analyzer was also down.

The Disc Diluter drive train had just been repaired, and it lasted long enough to permit performance of three Method 6 correlation tests. The raw data are presented in Table 18. These results were not included in the body of the Final Report because extensive changes and repairs were made before formal testing was initiated.

It is apparent that the Disc Diluter performance was well within the requirements of EPA-650/2-74-013, even if the data from the third run is included in forming an "average results." The downware trend of the Disc Diluter Model SS-310 analog record compared to the records for the other two systems indicated that failure began shortly before the third Method 6 sample was collected.

7.0 COMPUTER PROGRAMS USED IN REDUCTION OF DATA

The original Work Plan included generation of a program for the reduction of all data from punched paper tape records. The effort was abandoned when it became apparent that equipment failures were compromising the cost-effectiveness of this approach. The preliminary effort did not

Table 18. RESULTS OF PRELIMINARY METHOD 6 CORRELATION TESTING AT POWER PLANT. These data for the Disc Diluter are the only results obtained.

Correlation Test Run Number	Refrigerated Condensor, Dynasciences Model SS-330 ppm SO_2	Beckman Reflux Probe, Permeation Dryer, Model 865 NDIR ppm SO_2	Permeation Diluter, Flame Photometric (Meloy) ppm SO_2	Disc Diluter, Dynasciences Model SS-310		Method 6 Result ppm SO_2 (Dry Basis)
				Wet Basis	Dry Basis	
1 11:30 to 12:00	226	228	Down	183	205	204
2 17:45 to 16:15	221	238	Down	180	202	212
3 19:08 to 19:38	218	230	Down	158*	177*	204

*The disc appeared to be leaking during this run, after approximately 8 hours of continuous operation, but subsequent examination revealed that the drive train had fractured on an angle, resulting in "slip-clutch"-type operation.

result in a program worthy of reporting. However, several computer programs that were generated for use in data reduction utilizing manual entry techniques may be of general interest. The following paragraphs briefly describe the application of each of the three programs that were used with the Beckman time-shared system. The following pages are copies of teletype program listings. It should be noted that these programs calculate results using the summation of absolute values. Refer to Appendix F for a detailed discussion of this interpretation of the instructions of EPA-650/2-74-013.

METH4, METH6, AND METH11

These are used for calculating concentrations of water, SO_2, and H_2S, respectively, from data obtained from manual sampling and volumetric and/or titrimetric determinations, using EPA compliance test Methods 4, 6, and 11, respectively.

```
METH4        14:44   04/30/75  WEDNESDAY

100 DIM X(25),Y(25),P(25),T(25),F(25),S(25)
110 DIM G(25),W(25),B(25)
120 PRINT "HØW MANY DETERMINATIØNS ?"
130 INPUT N
140 FØR I = 1 TØ N
150 PRINT "ENTER GAS METER DATA"
160 INPUT X(I),Y(I),P(I),T(I)
170 PRINT "ENTER IMPINGER DATA"
180 INPUT F(I),S(I)
190 NEXT I
200 FØR I = 1 TØ N
210 T(I) = T(I)+460
220 G(I) = 17.71*(X(I)-Y(I))*P(I)/T(I)
230 W(I) = .0474*(F(I)-S(I))
240 B(I) = W(I)/(W(I)+G(I))+.025
250 C(I) = B(I)*1E6
260 PRINT
270 PRINT USING 340,I
280 PRINT USING 350,G(I)
290 PRINT USING 360,W(I)
300 PRINT USING 370,B(I)
310 PRINT USING 380,C(I)
320 PRINT
330 NEXT I
340 :TEST NØ. ##
350 :    V GAS STD = ##.### FT3
360 :    V H2Ø STD = .#####
370 :    FRACT H2Ø = .#####
380 :    C H2Ø = ###### P.P.M.
390 END
```

METH6 14:46 04/30/75 WEDNESDAY

```
100 DIM X(25),Y(25),P(25),T(25),G(25),S(25),B(25),M(25),Q(25)
110 DIM A(25),C(25)
120 DIM D(25),E(25),F(25)
130 DIM H(25),J(25)
140 PRINT "HØW MANY DETERMINATIØNS ?"
150 INPUT N
160 FØR I = 1 TØ N
170 PRINT "ENTER GAS METER DATA"
180 INPUT X(I),Y(I),P(I),T(I)
190 PRINT "ENTER TITRATIØN DATA"
200 INPUT S(I),H(I),B(I),J(I),M(I),Q(I),A(I)
210 NEXT I
220 FØR I = 1 TØ N
230 T(I) = T(I)+460
240 G(I) = 17.71*(X(I)-Y(I))*P(I)/T(I)
250 C(I) = (7.05E-5)*(S(I)-H(I)-B(I)+H(I))*M(I)*Q(I)/A(I)/G(I)
260 D(I) = C(I)*1.60186E10
270 E(I) = D(I)*3.77047E-4
280 PRINT
290 PRINT USING 360,I
300 PRINT USING 370,G(I)
310 PRINT USING 380,C(I)
320 PRINT USING 390,D(I)
330 PRINT USING 400,E(I)
340 PRINT
350 NEXT I
360 :TEST NØ. ##
370 :    V GAS STD = ##.### FT3
380 :    C SØ2 = .###### LB/FT3
390 :    C SØ2 = ######### UG/M3
400 :    C SØ2 = ##### P.P.M.
410 END
```

```
METH11        14:49   04/30/75  WEDNESDAY

100 DIM X(25),Y(25),P(25),T(25),G(25),S(25),B(25),C(25)
110 DIM D(25),E(25),H(25),J(25)
120 PRINT 'ENTER STANDARD DATA'
130 INPUT A,F,M,Q
140 U = 2.04*A/F
150 Ø = .1*U
160 R = Ø*Q/M
170 PRINT
180 PRINT USING 190,U,Ø
190 :THIØSULFATES ARE #.##### N, #.##### N
200 PRINT
210 PRINT USING 220,R
220 :IØDINE IS #.##### N
230 PRINT
240 PRINT 'HØW MANY DETERMINATIØNS ?'
250 INPUT N
260 FØR I = 1 TØ N
270 PRINT "ENTER GAS METER DATA"
280 INPUT X(I),Y(I),P(I),T(I)
290 PRINT "ENTER TITRATIØN DATA"
300 INPUT S(I),H(I),B(I),J(I)
310 NEXT I
320 FØR I = 1 TØ N
330 T(I) = T(I)+460
340 G(I) = 17.71*(X(I)-Y(I))*P(I)/T(I)
350 C(I) = (3.75661E-5)*(H(I)*R-S(I)*Ø-J(I)*R+B(I)*Ø)/G(I)
360 D(I) = C(I)*1.60186E10
370 E(I) = D(I)*7.08016E-4
380 PRINT
390 PRINT USING 460,I
400 PRINT USING 470,G(I)
410 PRINT USING 480,C(I)
420 PRINT USING 490,D(I)
430 PRINT USING 500,E(I)
440 PRINT
450 NEXT I
460 :TEST NØ. ##
470 :    V GAS STD = ##.### FT3
480 :    C H2S = .####### LB/FT3
490 :    C H2S = ########## UG/M3
500 :    C H2S = ##### P.P.M.
510 END
```

EPA DATA

This is used for entering data from correlation tests and zero and calibration drift tests.

EPADATA 7:46 05/14/75 WEDNESDAY

```
      DIMENSIØN R(50),FM(5,50)
  100 FØRMAT(33H NØ. ØF R'S, NØ. ØF INSTRUMENTS ?)
  101 FØRMAT(10H ENTER R'S)
  102 FØRMAT(5(F5.0,3X))
  103 FØRMAT(10H ENTER M'S)
  104 FØRMAT(12H INSTRUMENT ,I1)
      WRITE (6,100)
      READ (5,*) N,JJ
      WRITE (6,101)
READ (5,*) (R(I),I=1,N)
      J = 0
      WRITE (6,102) (R(I),I=1,N)
   10 J = J+1
      WRITE (6,103)
      WRITE (6,104) J
      READ (5,*) (FM(J,I),I=1,N)
      WRITE (6,102) (FM(J,I),I=1,N)
      IF (J.NE.JJ) GØ TØ 10
      CALL ØPEN (1,'CHØLLA','ØUTPUT')
      WRITE (1) N,JJ,((FM(J,I),J=1,JJ),R(I),I=1,N)
      CALL CLØSE (1)
   99 STØP
      END
```

EPASTAT

This was designed for calculating average deviations, 95% Confidence Intervals, and Relative Accuracy for correlation tests. This program was also used for calculating average drifts and 95% Confidence Intervals for zero and calibration drift data. The latter calculation was accomplished by entering a series of zeros in EPA DATA parallel to individual drift values.

```
EPASTAT        7:39    05/14/75   WEDNESDAY

100        DIMENSIØN R(50),FM(5,50),ELEM(5,50),ELEM2(5,50)
110        DIMENSIØN TERM1(5),TERM2(5),TERM3(5),T1SUM(5),T2SUM(5)
120        DIMENSIØN FUNCT(5)
130  100   FØRMAT(5(F5.0,3X))
140  101   FØRMAT(////11H ELEMENTS ?)
150  102   FØRMAT(1X,I2,23H ELEMENTS USED, ENTER K)
160  200   FØRMAT(F7.2)
170  201   FØRMAT(11H ELEMENTS: ,I2,9H THRØUGH ,I2)
180  202   FØRMAT(3(F7.2,5X))
190        CALL ØPEN (1,'CHØLLA','INPUT')
200        READ (1) N,JJ,((FM(J,I),J=1,JJ),R(I),I=1,N)
210        CALL CLØSE (1)
260        DØ 20 I=1,N
270        DØ 20 J=1,JJ
280        ELEM(I,J) = 0.
290   20   CØNTINUE
300        DØ 30 I=1,N
310        DØ 30 J=1,JJ
320        ELEM(J,I) = ABS(FM(J,I)-R(I))
330        ELEM2(J,I) = ELEM(J,I)*ELEM(J,I)
340   30   CØNTINUE
350   35   WRITE (6,101)
360        READ (5,*) IFIRST,ILAST
370        NUM = ILAST-IFIRST+1
380        WRITE (6,102) NUM
390        READ (5,*) FK
400        FNUM = FLØAT(NUM)
410        PREFIX = FK/(FNUM*SQRT(FNUM-1.))
420        RSUM = 0.
430        DØ 36 J=1,JJ
440        T1SUM(J) = 0.
445        T2SUM(J) = 0.
```

(Continued)

```
450   36 CØNTINUE
470      DØ 50 I=IFIRST,ILAST
480      DØ 40 J = 1,JJ
490      T1SUM(J) = T1SUM(J)+ELEM(J,I)
500      T2SUM(J) = T2SUM(J)+ELEM2(J,I)
510   40 CØNTINUE
520      RSUM = RSUM+R(I)
530   50 CØNTINUE
540      DØ 60 J =1,JJ
550      TERM1(J) = T1SUM(J)/FNUM
560      TERM2(J) = PREFIX*SQRT(FNUM*T2SUM(J)-(T1SUM(J)*T1SUM(J)))
570      TERM3(J) = RSUM/FNUM
580      FUNCT(J) = 100.*(TERM1(J)+TERM2(J))/TERM3(J)
590   60 CØNTINUE
610      WRITE (6,201) IFIRST,ILAST
615 WRITE (6,200) TERM3(1)
620      WRITE (6,202) (TERM1(J),TERM2(J),FUNCT(J),J=1,JJ)
630      GØ TØ 35
640      STØP
650      END
```

APPENDIX F

COMMENTS ON INTERPRETATION OF CALCULATIONS AND REPORTING INSTRUCTIONS OF EPA-650/2-74-013

APPENDIX F

In reviewing all data calculations and reported results just prior to publication of this Final Report, it was discovered that a potential ambiguity in interpretation of the guidelines exists. Pages 56 through 60 of Report EPA-650/2-74-013 provide guidelines for calculations, data analysis, and reporting.

Equations (E-1) and (E-2), as defined, apply to general statistical analysis of a number of individual values. Results reported as the sum of the absolute mean value and the 95% confidence interval as required in the guidelines are not ambiguous if all of the individual values are of the same algebraic sign. However, a question arises when these equations are applied to a number of individual values having both positive and negative signs, as may be the case for accuracy, calibration error, and both two- and twenty-four-hour zero and calibration drifts, all of which are calculated using deviation values in accordance with the instructions. In these cases, two interpretations are possible, depending upon whether absolute values are to be summed or whether the absolute value of a sum is to be used.

Interpretation of Equations (E-1) in accordance with normal mathematical conventions would result in a mean deviation, $\bar{X}$, formed by taking the algebraic sum of all deviations and dividing by the number of data points. With this interpretation $\bar{X}$ may be either positive or negative. Similarly, in Equation (E-2), used for calculating the 95% confidence interval, the summation of the deviation (individual values) would normally be algebraic, with retention of sign (until the summation is squared). The summation in both equations could be zero if cancelling deviations, either large or small, are involved.

It is believed that this interpretation is mathematically correct, and was probably intended in the original draft. The final draft, however, supports a different interpretation as is further explained in the following paragraphs:

This interpretation of Equations (E-1) and (E-2) as applied to the calculation of the mean value and 95% confidence interval of a group of deviation values results in smaller means and larger confidence intervals than does the other possible interpretation, which is discussed further below. However, the reported values, which are the sum of the absolute values of the mean and the 95% confidence interval, are not significantly different when calculated by the two different interpretations.

The second possible interpretation is that which was employed in all calculations reported in the body of the Final Report, and the data and calculations shown in Appendices D and E. This interpretation of the guidelines is suggested by the reason for revision of reporting requirements stated on pages 6 and 7 of EPA-650/2-74-013. The revision eliminated the separate reporting of the mean value (with sign) and the 95% confidence interval and requires reporting of the sum-of-the-mean and the 95% confidence interval. This revision is said to allow greater flexibility in the application of the guidelines to specific test results without increasing the absolute uncertainty (accuracy) allowed. Furthermore, the reporting requirements of paragraphs 6.2.1 through 6.2.6 of EPA-650/2-74-013 all read: "report the sum of the absolute mean value and the 95% confidence interval as a percentage of.....". The interpretation given in this instruction is to form the summations of the individual values using their absolute values, in both Equation (E-1) and (E-2). The value reported is, then, the sum of this mean and the 95% confidence interval, both of which are positive. In the reported results, all of which were calculated using this interpretation, the mean values are larger and the

confidence intervals are smaller than they would be if the first interpretation had been used. The sum of the two, however, which is the only value reported in the body of the Final Report, does not differ significantly from that which would have been calculated under the other interpretation of the reporting instructions. In particular, the results are mathematically identical whenever all deviations are of the same sign (either all positive or all negative). As discussed above, the other interpretation of the instructions is to form the algebraic sum of the deviations in both equations, then to report the absolute value of the mean deviation plus the absolute value of the 95% confidence interval (which is inherently a (±) interval).

In conclusion, it seems appropriate to present a tabulation of some of the results obtained when calculated by the two different methods. Since most Power Plant data happened to have deviations of only one sign, none of the results for that test are affected significantly, and more than 80% are not affected at all. At the Claus Plant, however, erratic behavior of several systems resulted in large deviations of both signs. All such results were recalculated to verify that no gross discrepancies would occur if the other interpretation of the instructions had been used.

The results, given in Table 19. are typical of those found for all four relative accuracy data groups for the three SO_2 monitors, and clearly indicate that the implications of the test results are not altered by the choice of interpretation of the calculation and reporting instructions. Similar differences were found for the first data set for the twenty-four-hour zero drift results, which changed by less than 6% of the value reported except for the Houston Atlas calibration drift value, which would have been 47% instead of 61% if calculated by the other approach. For such large errors, this shift is also considered to be insignificant.

Table 19. EXAMPLE RESULTS FOR CLAUS PLANT TESTS. Examples of mean values, 95% Confidence intervals, and accuracies (relative) calculated using two different interpretations of the instructions given in EPA-650/2-74-013.

Data Group No.	Calculated Results	Beckman Reflux Probe, Permeation Dryer, Model 865 NDIR	Permeation Diluter, Dynasciences Model SS-310	Permeation Diluter Flame Photometric (Meloy)	Houston Atlas Diluter and H_2S Monitor Vs. PGC (only)
		Values Calculated for Report (%) / Values Calculated by other Interpretation (%)			
1	Mean Accuracy (Deviation)	2.6 / -1.4	10.9 / -10.8	16.2 / -10.3	35.8 / -26.8
	95% Confidence Interval	1.3 / ±2.2	5.8 / ±6.0	11.8 / ±12.2	8.3 / ±21.1
	Reported Accuracy (Sum of Absolutes)	3.9 / 3.6	16.7 / 16.8	27.1 / 23.5	44 / 48
3	Mean Accuracy (Deviation)	5.8 / -1.3	11.0 / +8.9	16.6 / +16.3	26 / -14.8
	95% Confidence Interval	3.9 / ±6.0	4.3 / ±6.7	10.2 / ±10.7	12 / ±21.4
	Reported Accuracy (Sum of Absolutes)	9.7 / 7.3	15.3 / 15.6	26.8 / 27.0	38 / 36.2

As a final comment, there is considerable interpretive advantage in reporting the mean values (with sign) and the 95% confidence interval separately. In particular, it is apparent from Table H-1 that intermittent shifts in the permeation diluter temperature control caused the mean calibration of both the Dynasciences Model SS-310 and the Meloy Flame Photometer to shift from negative to positive between data groups 1 and 2. The 95% confidence intervals were reasonable for both monitors in spite of the abnormal effect of ambient temperature upon the Meloy permeation diluter. In addition, both the mean deviation and the 95% confidence interval were about twice as large for the Meloy analyzer as for the Model SS-310, reflecting the fact that loss of PMT temperature control for the Meloy Flame Photometric Analyzer introduced a second, abnormal, dependence upon temperature. Similarly, the large negative mean deviations of the Houston Atlas compared to the PGC simply reflect the fact that the two were not standardized on the same gas, while the relatively constant 95% confidence interval for the two data groups (±21%) indicates that repeatable results were being obtained, even though the randon variations of the Houston Atlas compared to the PGC were rather large. It should be noted that there is no valid basis for assigning these accuracy figures to the Houston Atlas alone, since the performance of the PGC was not independently assessed.

TECHNICAL REPORT DATA
(Please read Instructions on the reverse before completing)

1. REPORT NO. EPA-600/2-76-171	2.	3. RECIPIENT'S ACCESSION NO.
4. TITLE AND SUBTITLE EVALUATION OF MONITORING SYSTEMS FOR POWER PLANT AND SULFUR RECOVERY PLANT EMISSIONS		5. REPORT DATE June 1976
		6. PERFORMING ORGANIZATION CODE
7. AUTHOR(S) Malbone W. Greene, Robert L. Chapman, Samuel C. Creason, R. Neal Harvey, Glen A. Heyman, William R. Pearson		8. PERFORMING ORGANIZATION REPORT NO. FR-2678-102
9. PERFORMING ORGANIZATION NAME AND ADDRESS Beckman Instruments, Inc. Advanced Technology Operations 1630 S. State College Blvd. Anaheim, CA 92806		10. PROGRAM ELEMENT NO. 1AA010
		11. CONTRACT/GRANT NO. 68-02-1743
12. SPONSORING AGENCY NAME AND ADDRESS Environmental Sciences Research Laboratory Office of Research & Development U. S. Environmental Protection Agency Research Triangle Park, NC 27711		13. TYPE OF REPORT AND PERIOD COVERED Final 6/74 - 6/75
		14. SPONSORING AGENCY CODE EPA-ORD
15. SUPPLEMENTARY NOTES		

16. ABSTRACT This project was conducted to evaluate a number of commercially available extractive-type sampling and monitoring systems for monitoring sulfur dioxide and hydrogen sulfide source emissions. Evaluation testing was performed at a Fossil-Fuel-Fired Power Plant and at a Claus Sulfur Recovery Plant to obtain representative ranges of stack gas temperature, water and particulate loading, and concentrations of SO_2 and H_2S. Tests were performed to determine Error, Relative Accuracy, Two- and Twenty-Four-Hour Zero and Calibration Drifts, Response Time, and Operational Period in accordance with published EPA guidelines. The performance in each test was judged against the published EPA performance criteria (EPA-650/2-74-013).

The detailed field test results, the complete Work Plan, sampling interface drawings, the results of evaluations of Compliance Test Methods 6 and 11, miscellaneous observations and results, and a discussion of the calculation and reporting instructions of the EPA Guidelines are given in the appendices. A detailed description of the systems evaluated, summaries of the field test results, and relevant comments concerning the results are given in the body of the report.

Because the sites chosen for evaluation testing provided wide ranges of sample temperature, solids and water loading, and SO_2 concentration, the results are considered to be relevant to most stack-gas monitoring problems. Results at the Claus Plant site were somewhat compromised by equipment failures.

17. KEY WORDS AND DOCUMENT ANALYSIS

a. DESCRIPTORS	b. IDENTIFIERS/OPEN ENDED TERMS	c. COSATI Field/Group
*Air pollution		13B
*Flue gases		21B
*Gas sampling		14B
*Sulfur dioxide		07B
*Hydrogen sulfide		
*Evaluation		

18. DISTRIBUTION STATEMENT RELEASE TO PUBLIC	19. SECURITY CLASS (This Report) UNCLASSIFIED	21. NO. OF PAGES 202
	20. SECURITY CLASS (This page) UNCLASSIFIED	22. PRICE

EPA Form 2220-1 (9-73)