EPA-600/2-76-268
October 1976

Environmental Protection Technology Series

BLAST FURNACE SLIPS AND ACCOMPANYING EMISSIONS AS AN AIR POLLUTION SOURCE

Industrial Environmental Research Laboratory
Office of Research and Development
U.S. Environmental Protection Agency
Research Triangle Park, North Carolina 27711

U.S. DEPARTMENT OF COMMERCE
National Technical Information Service

PB-261 065

Blast Furnace Slips and Accompanying Emissions as an Air Pollution Source

Battelle Columbus Labs, Ohio

Prepared for

Industrial Environmental Research Lab, Research Triangle Park, N C

Oct 76

1 OF 1

PB

261065

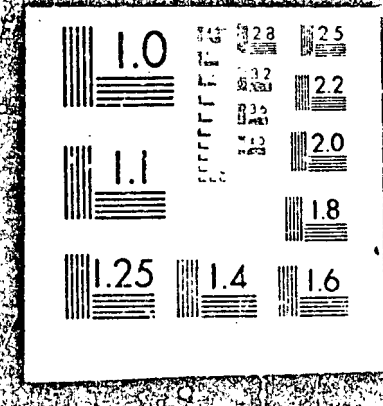

RESEARCH REPORTING SERIES

Research reports of the Office of Research and Development, U.S. Environmental Protection Agency, have been grouped into five series. These five broad categories were established to facilitate further development and application of environmental technology. Elimination of traditional grouping was consciously planned to foster technology transfer and a maximum interface in related fields. The five series are:

1. Environmental Health Effects Research
2. Environmental Protection Technology
3. Ecological Research
4. Environmental Monitoring
5. Socioeconomic Environmental Studies

This report has been assigned to the ENVIRONMENTAL PROTECTION TECHNOLOGY series. This series describes research performed to develop and demonstrate instrumentation, equipment, and methodology to repair or prevent environmental degradation from point and non-point sources of pollution. This work provides the new or improved technology required for the control and treatment of pollution sources to meet environmental quality standards.

EPA REVIEW NOTICE

This report has been reviewed by the U.S. Environmental Protection Agency, and approved for publication. Approval does not signify that the contents necessarily reflect the views and policy of the Agency, nor does mention of trade names or commercial products constitute endorsement or recommendation for use.

This document is available to the public through the National Technical Information Service, Springfield, Virginia 22161.

TECHNICAL REPORT DATA
(Please read Instructions on the reverse before completing)

1. REPORT NO. EPA-699/2-76-268	2.	3. RECIPIENT'S ACCESSION NO.
4. TITLE AND SUBTITLE BLAST FURNACE SLIPS AND ACCOMPANYING EMISSIONS AS AN AIR POLLUTION SOURCE		5. REPORT DATE October 1976
		6. PERFORMING ORGANIZATION CODE
7. AUTHOR(S) C.E. Mobley, A.O. Hoffman, and H.W. Lownie		8. PERFORMING ORGANIZATION REPORT NO.
9. PERFORMING ORGANIZATION NAME AND ADDRESS Battelle-Columbus Laboratories 505 King Avenue Columbus, Ohio 43201		10. PROGRAM ELEMENT NO. 1AB604
		11. CONTRACT/GRANT NO. 68-02-1323, Task 60
12. SPONSORING AGENCY NAME AND ADDRESS EPA, Office of Research and Development Industrial Environmental Research Laboratory Research Triangle Park, NC 27711		13. TYPE OF REPORT AND PERIOD COVERED Task Final: 4-7/76
		14. SPONSORING AGENCY CODE EPA-ORD

15. SUPPLEMENTARY NOTES IERL-RTP Task Officer for this report is R.V. Hendriks, Mail Drop 62, 919/549-8411 Ext 2557.

16. ABSTRACT The report gives results of a study to ascertain the severity of blast-furnace slips and their accompanying bleeder-valve emissions as a source of air pollution. It describes factors contributing to the occurrence of hangs and slips in the blast furnace. It discusses the mechanics by which emissions occur from the bleeder valves. It presents data characterizing blast-furnace bleeder-valve emissions, including the frequency and duration of slip-induced bleeder-valve openings and the quantities of gas and dust issuing from open bleeder valves. It concludes that: (1) slip-induced bleeder-valve emissions are not an industry- or nation-wide problem; (2) these emissions may constitute an individual furnace and/or local air pollution problem; (3) less total particulates are emitted from this source than from other in-plant air pollution sources; and (4) the frequency of bleeder-valve emissions and, in turn, the severity of the problem have diminished over the last 20 years. The report discusses measures which may reduce the occurrence and/or severity of blast-furnace bleeder-valve emissions.

17. KEY WORDS AND DOCUMENT ANALYSIS

a. DESCRIPTORS	b. IDENTIFIERS/OPEN ENDED TERMS	c. COSATI Field/Group
Air Pollution	Air Pollution Control	13B
Iron and Steel Industry	Stationary Sources	11F
Blast Furnaces	Blast-Furnace Slips	
Dust	Blast-Furnace Hangs	11G
	Bleeder Valves	
	Particulate	

18. DISTRIBUTION STATEMENT Unlimited	19. SECURITY CLASS (This Report) Unclassified	21. NO. OF PAGES 64
	20. SECURITY CLASS (This page) Unclassified	22. PRICE 4.50

EPA Form 2220-1 (9-73)

EPA-600/2-76-268
October 1976

BLAST FURNACE SLIPS AND ACCOMPANYING EMISSIONS AS AN AIR POLLUTION SOURCE

by

C.E. Mobley, A.O. Hoffman, and H.W. Lownie

Battelle-Columbus Laboratories
505 King Avenue
Columbus, Ohio 43201

Contract No. 68-02-1323, Task 60
Program Element No. 1AB604

EPA Task Officer: Robert V. Hendriks

Industrial Environmental Research Laboratory
Office of Energy, Minerals, and Industry
Research Triangle Park, NC 27711

Prepared for

U.S. ENVIRONMENTAL PROTECTION AGENCY
Office of Research and Development
Washington, DC 20460

1a/

ABSTRACT

This study was made to ascertain the severity of blast-furnace slips and their accompanying bleeder-valve emissions as a source of air pollution.

Factors contributing to the occurrence of hangs and slips within the blast furnace are described. The mechanics by which emissions occur from the bleeder valves are discussed. Data characterizing blast-furnace bleeder-valve emissions, including the frequency and temporal duration of slip-induced bleeder-valve openings and the quantity of gas and dust issuing from opened bleeder valves, are presented.

Principal conclusions are:

(1) Slip-induced bleeder-valve emissions are not an industry-wide or nation-wide problem.

(2) These emissions may constitute an individual furnace and/or local air pollution problem.

(3) Less total particulates are emitted from this source than from other in-plant air-pollution sources.

(4) The frequency of occurrence of bleeder-valve emissions, and in turn, the severity of the problem, has diminished over the last 20 years.

Measures which may provide a means for reducing the occurrence and/or severity of blast-furnace bleeder-valve emissions are discussed.

TABLE OF CONTENTS

ABSTRACT ii

FIGURES iv

TABLES iv

I. SUMMARY AND OVERVIEW 1

II. INTRODUCTION AND BACKGROUND 3

Blast-Furnace Off-Gas Systems 6

III. CHARACTERIZATION OF BLAST-FURNACE BLEEDER-VALVE EMISSIONS 10

Frequency of Bleeder-Valve Openings 10
Duration of Slip-Induced Bleeder-Valve Emissions... 17
The Quantity of Gas and Dust Issuing from Opened Bleeder Valves 18

IV. EVALUATION OF SLIP-INDUCED BLEEDER-VALVE EMISSIONS AS A SOURCE OF AIR POLLUTION 21

V. METHOD AND/OR PROCEDURES FOR REDUCING SLIP-INDUCED BLEEDER-VALVE EMISSIONS 24

REFERENCES 33

APPENDIX A: FACTORS CONTRIBUTING TO BLAST-FURNACE HANGING 37

APPENDIX B: LETTER RESPONSE OF THE AMERICAN IRON AND STEEL INSTITUTE (AISI) TECHNICAL COMMITTEE ON BLAST FURNACE PRACTICE CONCERNING AVAILABILITY OF DATA ON SLIP-INDUCED BLEEDER-VALVES EMISSIONS 41

APPENDIX C: SECTION 1810.5: STANDARDS FOR SOURCES - BLAST-FURNACE SLIPS RULES AND REGULATION; ARTICLE XVIII, AIR POLLUTION CONTROL JUNE 15, 1972, ALLEGHENY COUNTY HEALTH DEPARTMENT 43

APPENDIX D: ALLEGHENY COUNTY HEALTH DEPARTMENT DATA 45

APPENDIX E: ESTIMATE OF QUANTITY OF GAS AND DUST ASSOCIATED WITH A BLAST-FURNACE SLIP 49

APPENDIX F: COPY OF U.S. LETTER PATENT ON "BLEEDER AND EQUALIZER FOR BLAST FURNACES" 51

LIST OF TABLES

Page

Table 1. Summary of Allegheny County Data on Frequency of Slip-Induced Bleeder-Valve Openings..... 13

Table 2. Comparison of Several Iron and Steel Plant Air-Pollution Sources..... 22

LIST OF FIGURES

Figure 1. Schematic Illustration of a Blast Furnace and Major Components..... 4

Figure 2. Schematic Illustration of Blast Furnace Top..... 7

Figure 3. Schematic Illustration of Gas Cleaning System..... 9

Figure 4. Bargraph of Number of Blast Furnaces with Given Number of Bleeder-Valve Openings/Month..... 16

Figure 5. Basic System Design for Semi-Clean Gas Bleeder-Valve Unit..... 28

Figure 6. Suitable Operating Range for a Blast Furnace..... 40

BLAST-FURNACE SLIPS AND THEIR ACCOMPANYING EMISSIONS AS A SOURCE OF AIR POLLUTION

I. Summary and Overview

All blast furnaces are subject to operating irregularities, including hangs and slips. A blast furnace is said to be hanging when the normal uniform descent of the burden is retarded or interrupted. Typically, the hanging condition is evidenced by the motion (or lack of motion) of the burden at the stock line as measured with stock-level rods. Hanging is generally attributed to wedging, bridging, or scaffolding of the burden.

In general, when the burden is not descending at the proper rate at the stock line, but is continuing to descend in some lower section of the furnace, the probability of slipping increases. Slipping occurs when the stock moves discontinuously in irregular falls (slips) over vertical distances of the order of a foot or more at a time. Slips are evidenced to the furnace operator by surges in the top-gas pressure and increased top-gas temperatures.

When a heavy or severe slip occurs, as evidenced by a significant increase in the top-gas pressure, one or more pressure-release valves, known as bleeder valves, manually or automatically open to relieve the pressure increase. When the bleeder valves are open, either untreated or partially cleaned blast-furnace gas is released (sometimes flared to the atmosphere). The untreated gas contains particulates and, therefore, represents a potential source of air pollution. The objective of this study is to evaluate blast-furnace slips and their accompanying emissions as a source of air pollution.

The principal conclusions reached through this study are as follows:

(1) Slip-induced bleeder-valve emissions are not an industry-wide or nation-wide problem.

(2) Blast-furnace bleeder-valve emissions may constitute an individual furnace and/or local air-pollution problem.

(3) Slip-induced bleeder-valve emissions are a source of less total particulates than other in-plant air-pollution sources.

(4) The frequency of occurrences of bleeder-valve emissions has diminished over the last 20 years.

Based on the data gathered during the study, Battelle researchers estimate that more than 80 percent of the operating furnaces in the U.S. (i.e., 100 to 110 blast furnaces) each experience fewer than 5 slip-induced bleeder-valve emissions per month, and that these do not constitute a major source of air pollution. However, there may be 15 to 25 blast furnaces for which the bleeder valves are opened more frequently (i.e., between 20 and 40 times per month) in conjunction with slips.

Battelle researchers estimate that the quantity of dust emitted from an opened bleeder valve is about 12.5 to 125 kilograms (28 to 276 pounds) per slip. Using the estimated figures for quantity of dust emitted per slip, it is estimated that between 170 and 1671 tonnes (187 to 1842 tons) of dust were emitted in the U.S. in 1975, from this source. Normalized to the total hot-metal production of 1975, the emission factor associated with the slip-induced bleeder openings ranges from about 0.002 to 0.023 kilograms of dust per tonne of hot metal (0.005 to 0.046 pound per net ton). This emission factor is less than the factor associated with blast-furnace cast-house emissions and basic oxygen furnace charging and tapping emissions.

The frequency of slip-induced bleeder-valve emissions appeared to be diminishing during the period 1974 to 1975, and it is known that the problem has become less frequent over the last 20 years.

Proposed measures which may provide a means for reducing the occurrence and/or severity of bleeder-valve emissions from problem furnaces include:

(1) Improvement of the furnace burden;

(2) Retrofitting of advanced-design gas-processing systems, such as the semi-clean gas bleeder-valve system;

(3) Evaluating the Leone-type differential blowing system;

(4) Evaluating the performance of blast-furnace cleaners, such as calcium chloride, as a preventive measure to reduce the occurrence of hangs and slips.

II. Introduction and Background

Fundamentally the blast furnace is a counter-current reactor in which descending iron oxide, coke, and slag-making materials remove heat from an ascending stream of hot reducing gases composed mainly of nitrogen, carbon monoxide, and carbon dioxide. Chemical reduction of the iron oxide occurs as the charge descends. Finally, there is fusion of the reduced iron, some unreduced iron oxide, and slag-making materials. The liquid slag and metal collect in the hearth of the furnace. Carbon is burned at the tuyeres to produce heat and carbon monoxide which serves as the principal reducing agent for the whole process. A schematic illustration of a blast furnace and associated operations is shown in Figure 1.

The actual operation of a blast furnace is complicated by significant deviations from the ideal steady-state uniform reactor implied above. For example, physical inhomogeneities of the charge frequently cause regions of high and low permeability, which in turn lead to nonuniform flow of gas and solids within the furnace. Minor variations in the flow rates are on an ongoing part of all blast furnace operations, and, as such, are not generally disruptive to the process. However, all blast furnaces, including the most modern, are subject to operating irregularities wherein the descent of solids and/or ascent of gases is sufficiently different from the usual that corrective measures are required to return the furnace to its normal and controlled mode of operation.

Common irregularities relating to the nonuniform movement of materials within the furnace are known as hanging and slipping. A blast furnace is said to be hanging when the normal uniform descent of the burden is retarded or interrupted. Typically, the hanging condition is evidenced by the motion (or lack of motion) of the burden at the stock line as measured with stock-level rods. Hanging is generally attributed to wedging, bridging, or scaffolding of the burden. Appendix A, titled

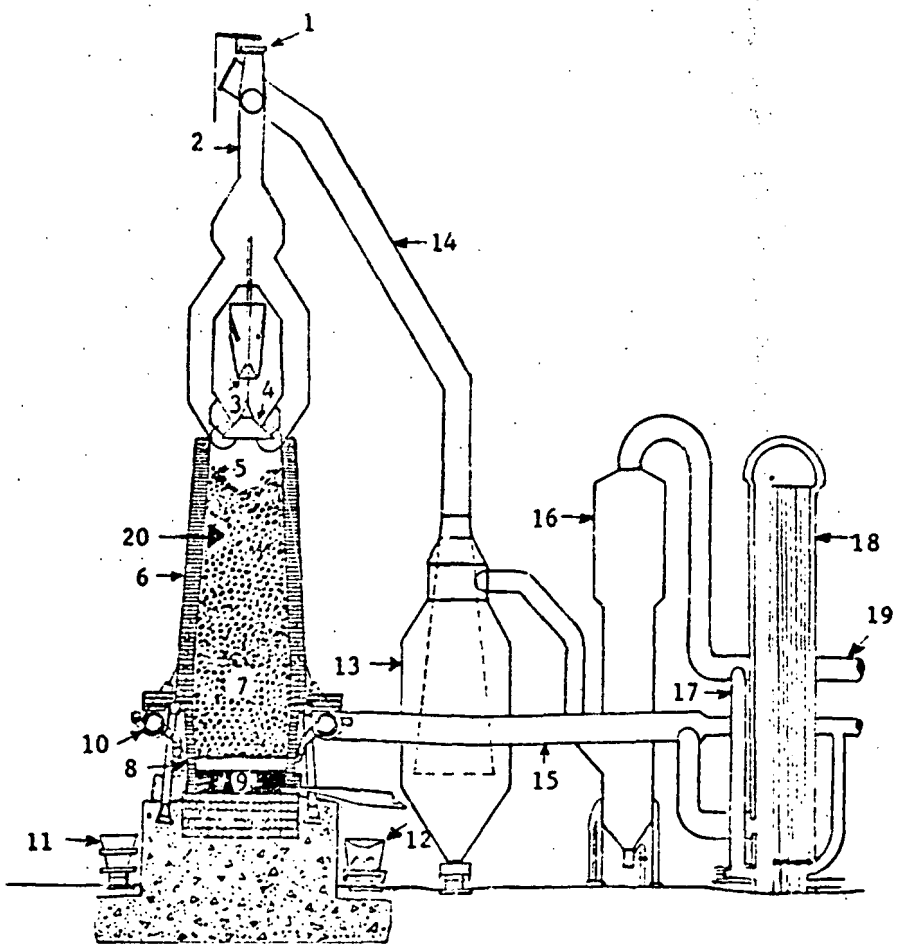

Legend

1.	Bleeder valve	11.	Slag ladle
2.	Gas uptake	12.	Hot-metal ladle
3.	Small bell	13.	Dust catcher
4.	Large bell	14.	Downcomer
5.	Stock line	15.	Hot blast line to furnace
6.	Stack	16.	Gas washer
7.	Bosh	17.	Gas offtake to stove burner
8.	Tuyeres	18.	Stove
9.	Hearth	19.	Surplus gas line
10.	Bustle pipe	20.	Stock--Iron ore, coke, limestone

FIGURE 1. SCHEMATIC ILLUSTRATION OF A BLAST FURNACE AND MAJOR COMPONENTS

"Factors Contributing to Blast-Furnace Hanging", (see page 36) is included for those readers desiring more information on the causes and contributory factors of blast-furnace hanging.

In general, when the burden is not descending at the proper rate at the stock line, (i.e., the furnace is hanging) but is continuing to descend in some lower section of the furnace, the probability of slipping increases. Slipping is the discontinuous movement of the stock in irregular falls (slips) over vertical distances of the order of a foot or more at a time. Slips are evidenced to the furnace operator by surges in the top-gas pressure and increased top-gas temperatures. Operators frequently attempt to minimize or eliminate uncontrolled slips by "checking"; that is, by lowering the blast volume (the wind rate) whenever hanging is suspected, or periodically as a part of the normal operating procedure. The use of checking provides the furnace operator with one method for controlling the frequency of occurrence and/or the severity of slips.

When a heavy or severe slip occurs, as evidenced by a significant increase in the top-gas pressure, one or more pressure-release valves, known as bleeder valves, manually or automatically open to relieve the pressure increases. A bleeder valve is shown as Item 1 in Figure 1. When a bleeder valve is open, blast-furnace gas is released (sometimes flared) to the atmosphere. The untreated gas contains particulates and, therefore, represents a potential source of air pollution.

Several references have indicated that slip-induced bleeder-valve emissions may be a source of air pollution.[1-5] Little quantitative data have been reported on the frequency of slip-induced bleeder-valve openings, on the duration of bleeder-valve emissions, or on their emission characteristics (i.e., dust loading, opacity, etc.). This study was undertaken to collect data on slip-induced bleeder-valve emissions, and, in turn, to evaluate the seriousness of these blast-furnace emissions as a source of air pollution.

Prior to presenting the data and conclusions generated during the study, it is appropriate to describe briefly pertinent volumetric and transport aspects of the blast-furnace off-gas system. Such information is presented below.

Blast-Furnace Off-Gas Systems

To produce a tonne of hot metal (molten pig iron) in a blast furnace, it is necessary to compress about 1345 m^3 of air and then to pass it first through heating equipment (stoves) and then into the furnace through the tuyeres. In equivalent English units this converts to about 47,500 SCF* of air per net ton of hot metal. The amount of blast-furnace gas (top gas) produced is generally about 1.35 times the volume of blast air. Therefore, the amount of top gas to be processed is about 1816 m^3 per tonne of hot metal (about 64,000 SCF per net ton). The pressure drop across the burden from the tuyeres to the space below the burden-charging system is about 138 kPa (20 psig). Depending on the age of individual blast furnaces, the top pressure on North American furnaces is controlled over a range of 13.8 to 103 kPa (2 to 15 psig). Top-gas pressure is controlled by throttle valves (septum valves) or by damper valves associated with variable-throat venturi scrubbers. The high-top pressure furnaces having variable-throat venturi scrubbers are generally the newest (and largest) furnaces in operation.

The amount of dust blown out of furnaces with top gas varies among individual furnaces. The range is about 10 to 150 kg per tonne of hot metal (about 20 to 300 pounds per net ton), with the majority of the North American furnaces being below 25 kg per tonne (below 50 pounds per net ton). The dust loading in the top gas is then in the range of 5.5 to 82.6 grams per m^3 (2 to 33 grains per SCF). Typically this gas is cleaned to a dust loading of about 0.011 gram/m^3 (0.005 grain/SCF). At many furnaces, the gas is cleaned to 0.002 gram/m^3 (0.001 grain/SCF) to further increase the heating performance of the cleaned gas in the blast-furnace stoves.

Figure 2 is a simplified sketch of the principal operating parts of the majority of blast-furnace tops in the United States. The emission sources of interest in this study are the two or more "bleeder doors" that are always located at the top of furnaces and are "counter-weighted to automatically open whenever gas pressure in the top system

---

* SCF = standard cubic feet

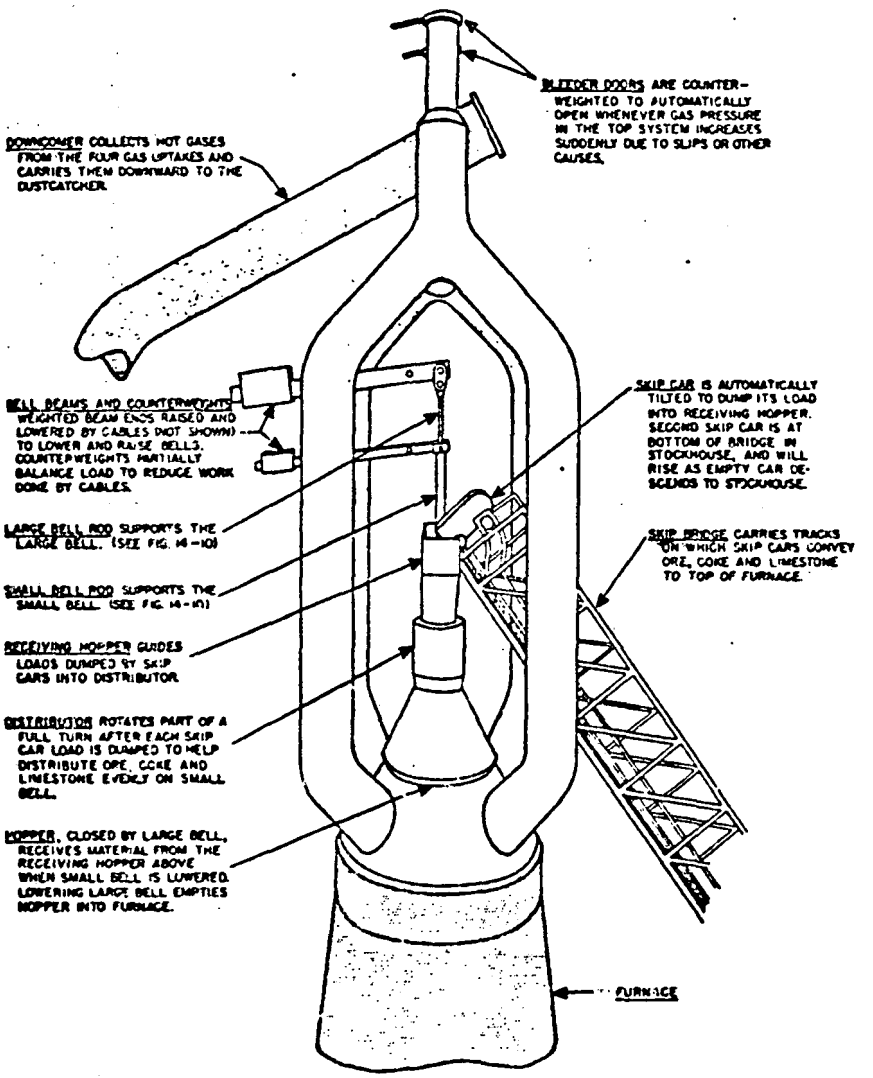

*THE VARIOUS PLATFORMS AND STRUCTURES SUPPORTING THE TOP EQUIPMENT HAVE BEEN OMITTED FROM THIS DRAWING, AS WELL AS THE CABLES AND SHEAVES THAT OPERATE THE SKIP AND THE BELLS. ALSO OMITTED ARE THE JIB BOOM CRANES THAT ASSIST IN HOISTING REPAIR AND REPLACEMENT PARTS TO THE TOP OF THE FURNACE.

FIGURE 2. SCHEMATIC ILLUSTRATION OF BLAST FURNACE TOP [6]

increases suddenly due to slips or other causes".[6] The newer high-top-pressure furnaces have substituted power-actuated valves for the weighted flapper or "bleeder door" system. In these instances, the top pressure does not force the valves open. Rather, when the selected pressure trip-point is reached, powered actuators move the valve downward from its seat to open the entire cross section of the valve opening. Within the iron-producing industry, the pressure-release valves and "doors" on the top of furnaces have many names. The most common name is "dirty-gas bleeders" or "dirty-gas bleeders plus the explosion valve". These release systems are actually safety devices rather than "bleeders".

There is only a limited amount of information on the pressure settings on the blast-furnace pressure-relief systems. One furnace operating at 16.5 kPa (2.4 psig) top pressure has the "dirty-gas bleeders" set to begin opening at 29.6 kPa (4.3 psig). Blast-furnace builders have reported that new furnaces operating at 41.3 kPa (6 psig) typically will have release-valve settings of 55.1 kPa (8 psig) for the first valve and 58.6 kPa (8.5 psig) for the second valve. As a generalization, the first bleeder valve is opened at a pressure 2 psig in excess of the normal top-gas pressure.

Once the dust-laden blast-furnace gas has reached the top of the furnace, it is ducted to the gas-cleaning system through the downcomer shown in Figures 1 and 2. The downcomer duct connects to the gas-cleaning systems, as shown in Figures 1 and 3. All gas-cleaning systems have a dust catcher as shown at the right side of Figures 1 and 3. Large particles settle out in this unit, and the fine particles are next removed by subsequent combinations of scrubbers or scrubbers and electrostatic precipitators.

As part of the development of high-top-pressure blast-furnace operations, a system was devised for partially relieving the slip-induced excess pressure by venting partially cleaned gas through a bleeder valve located downstream from the dust catcher.[4,8] The incorporation of a semi-clean-gas bleeder valve to exhaust partially cleaned gas at the top of the furnace should provide a method and/or apparatus for lowering the quantity of dust emitted from slip-induced bleeder-valve openings. While some U.S. blast furnaces are known to be equipped with and to utilize semi-clean-gas bleeder valves to partially

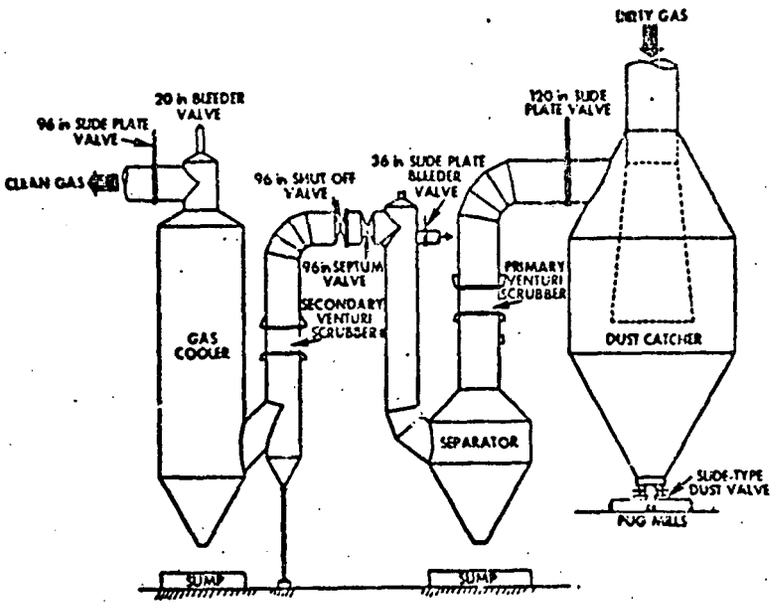

FIGURE 3. SCHEMATIC ILLUSTRATION OF GAS CLEANING SYSTEM [7]

relieve the pressure pulses associated with furnace slips, the number of furnaces using such systems is not known. The utilization of the semi-clean-gas bleeder valves as a means to reduce the slip-induced bleeder-valve emission problem is discussed in Section V of this report.

III. Characterization of Blast-Furnace Bleeder-Valve Emissions

While previous studies and articles [1-5] had indicated that blast-furnace bleeder-valve emissions due to slips were a potential source of air pollution, few quantitative data were available to assess the extent of this potential problem. The basic data which were lacking for such an evaluation included:

(1) The frequency of slip-induced bleeder-valve openings,

(2) The temporal duration of the bleeder-valve openings,

(3) The gas-flow rate issuing from the open bleeder-valves,

(4) The dust-loading factor for the bleeder-valve emission.

An evaluation of each of these factors is presented below.

Frequency of Bleeder-Valve Openings

Blast-furnace bleeder valves remain closed practically all of the time that the furnace is in blast (i.e., is in normal operation). However, the bleeder valves are opened in response to or as part of several blast-furnace operating conditions. For example, the bleeder valves may be opened intentionally as part of the furnace shutdown practices or during backdrafting.* The valves may also be opened intentionally during periods of maintenance and repair to the furnace proper, such as during replacement of tuyeres or monkeys. The bleeder valves are also opened during periods of repair to the gas-cleaning system. As previously stated, bleeder valves are also utilized as the safety relief valves for the release of the excess pressure associated with slips.

Blast-furnace bleeder valves are typically opened intentionally more frequently for maintenance and repair purposes than as a result of slips. For example, based on data collected by the Allegheny County Health Department, Pittsburgh, Pennsylvania,[9] the bleeder valves on two blast furnaces were opened a total of 52 times over a 2-week period in 1975. Of these 52 bleeder-valve openings, 49 were intentional for reasons of furnace maintenance and repair, and 3 (i.e., about 6 percent of the total) were caused by slips.

Only those bleeder-valve openings due to slips are considered significant as an air-pollution source. The gas emission rates and dust-loading factors for the emissions from open bleeder valves in conjunction with furnace maintenance and repairs are thought to be relatively small. Generally the wind on the furnace is significantly reduced from the normal operating valves during the periods of maintenance and repair. The quantity of top gas, and the dust loading of the top gas, are considered negligible during maintenance and repair periods relative to periods of normal and full production operation. Also, frequently, steam is introduced into the furnace for gas purging purposes, and it is the

---

* Backdrafting refers to the condition when the furnaces gases are drawn through the tuyeres to a hot stove where the gas is burnt. Thus, the gas flow in backdrafting is reversed from that for normal furnace operation

steam, rather than dust-laden gas, which is vented from the opened bleeder valves during these periods of repair. Thus, the data which were sought as input for this study are the the number of slip-induced bleeder-valve openings per unit of time. It should be recognized that this may not be the same as the number of slips experienced during a given operating period. Only those slips which generate an excess pressure equal to or greater than that required to open the bleeder valves are of interest as sources of air pollution.

Most, if not all, blast furnace operations continuously record the furnace top-gas pressure on 24-hour recording charts as part of their collection of operating data. By analyzing the top-pressure records (plus considerations of the other recorded operating data), the number of slips occurring during any operating period can be determined. Although these data (i.e., total number of slips and number of slips producing open bleeder valves) are a part of the continuously recorded operating data, few companies routinely analyze their records to determine and/or report this information.

As part of this study, the researchers contacted the American Iron and Steel Institute (AISI) requesting slip and bleeder-valve opening-frequency data from the U.S. steelmaking industry. Consistent with the responses from individual companies contacted by the research team, the AISI Technical Committee on Blast Furnace Practice indicated that the requested information (i.e., total number of slips and slip-induced bleeder-valve openings per unit time) was not generally recorded and available. The letter response of the AISI Technical Committee on Blast Furnace Practice to our inquiry on the availability of slip frequency and bleeder-valve data is presented in Appendix B.

Data collected by Battelle for an earlier Government report on the causes of air pollution from the integrated iron and steel industry [5] had indicated that for some blast furnaces the bleeder valves are rarely open as a result of slips. One plant containing eight furnaces had reported in 1968 that one or two short-interval openings of the bleeders occur during any given week for the total of all eight furnaces.[5] These data are equivalent to a frequency statement of 1/2 to 1 slip-induced bleeder-valve opening per furnace per month.

During this study, Battelle researchers contacted two companies which operate blast furnaces to ascertain the frequency of slip-induced bleeder-valve emissions for their operations. Both companies indicated that bleeder valves are open far more frequently for furnace maintenance purposes than as a result of slips. Both companies also estimated that their bleeder valves were opened several times per month (i.e., 3 to 8) for each blast furnace in response to slips.

On contacting several regional EPA offices and local air-pollution control groups, it was learned that the Allegheny County Health Department, Pittsburgh, Pennsylvania, included consideration of allowable emissions resulting from blast-furnace slips in its June 15, 1972, Rules and Regulations, Article XVIII, Air Pollution Control.[10] As set forth in that document, blast-furnace bleeder valves are not allowed to emit, as a result of a slip, more than 60 times in any consecutive 12-month period, or more than 10 times in any consecutive 30-day period. Section 1810.5 of the Allegheny County Health Department Rules and Regulations dealing with emissions associated with blast-furnace slips is presented in Appendix C.

As stipulated in the rules and regulations concerning emissions due to blast-furnace slips, the Allegheny County Bureau of Air Pollution Control has, since 1972, collected data on the monthly number of slip-induced bleeder-valve openings for blast furnaces within Allegheny County. Typically, there were 13 to 17 blast furnaces in blast in Allegheny County each month during the period

1972 through 1975. These Allegheny County data on blast-furnace slip-induced bleeder-valve openings per month over the 4-year period 1972 through 1975, for 16 different blast furnaces at five plant sites, are presented in Appendix D.

A summary of the Allegheny County data in Table 1 includes the total number of slip-induced bleeder-valve openings reported, the product of the number of blast furnaces and the number of months each year for which data were reported and, in turn, the yearly average number of bleeder-valve openings per blast furnace-month for each year from 1972 through 1975.

TABLE 1: SUMMARY OF ALLEGHENY COUNTY DATA ON FREQUENCY OF SLIP-INDUCED BLEEDER-VALVE OPENINGS

Year	Total Number of Slip-Induced Bleeder-Valve Openings Reported	Blast Furnace-Months	Avg. Number of Bleeder-Valve Openings Per Blast Furnace Month
1972	1144	138	8.3
1973	1128	124	9.1
1974	1373	144	9.5
1975	324	84	3.9

The Allegheny County Health Department data summarized in Table 1 indicate that there were typically an average of 8 to 10 slip-induced bleeder-valve openings per furnace each month during the period 1972 through 1974. In 1975, the average number of monthly slip-induced bleeder-valve openings decreased to about 4 per furnace. The reduction in the average number of slip-induced bleeder-valve openings per month evidenced in 1975 appears to be largely the result

of discontinuing operations of several blast furnaces which had previously experienced significantly more bleeder-valve openings than the averages.

The data in Table 1 are averages based on the accumulated data from 16 blast furnaces reporting during each of the given years. These average values do not provide insight to the frequency of occurrence of any particular value (i.e., the distribution of values). On examining the individual furnace data presented in Appendix D, it is noted that few furnaces exhibit open bleeder-valve frequencies comparable to the average values given in Table 1. Based on the Allegheny County data, the blast furnaces can be grouped into essentially two categories, i.e., those which seldom experience slip-induced bleeder-valve openings and those for which the frequency of opened bleeder valves is consistently in excess of 15 times per month. For example, for the 15 blast furnaces reporting bleeder-valve opening data in 1974, 9 furnaces (i.e., 60 percent of the total) had yearly averages of less than 2 bleeder-valve openings per month, 2 furnaces (i.e., 13 percent) had between 2 and 5 bleeder-valve openings per month, while 4 furnaces (27 percent) reported yearly average bleeder-valve openings in excess of 15 per month (i.e., Blast Furnace 6 at Plant B had 16.1 openings/month, Blast Furnace 7 at Plant A had 21.7 openings/month, Blast Furnace 3 at Plant B had 20.1 openings/month and Blast Furnace 5 at Plant B had 49.2 openings/month).

A representative of the Allegheny County Bureau of Air Pollution Control indicated that they also monitor three blast furnaces in Allegheny County for which open bleeder-valve frequency data are not included in Appendix D. For those 3 blast furnaces (not included in Appendix D), the yearly average number of slip-induced bleeder-valve openings was estimated to be less than 5 per month.

At the start of this study, Battelle researchers were aware that the City of Cleveland, Ohio, Division of Air Pollution Control was actively attempting to obtain and evaluate blast-furnace bleeder-valve emission data.[11] As part of this study, representatives of the Cleveland Air Pollution Group were contacted to obtain bleeder-valve

opening data. Cleveland has not monitored and/or collected blast-furnace bleeder-valve opening data of a similar nature to the Allegheny County data for the blast furnaces within the Cleveland city boundaries. However, a representative of the Cleveland Air pollution Control Division indicated that bleeder-valve emissions are considered to be a problem with only one of the seven blast furnaces currently operating in that area. For six of the seven blast furnaces operating in Cleveland, it was estimated that the bleeder valves seldom opened more than 4 to 5 times per month due to furnace slips. For the one blast furnace, it was estimated that the bleeder valves were opened between 30 and 40 times a month as a result of slips.

These measured and estimated bleeder-valve opening data are combined and presented in Figure 4 to show the number of blast furnaces which experience bleeder-valve openings a specified number of times each month. While the data presented in Figure 4 are for different years (see the legend on the figure), each data entry is for an individual furnace. It is thought that the bleeder-valve opening frequencies have not changed significantly with time for those particular furnaces for which data are included.

The 32 furnaces considered in Figure 4 represent about 1/4 of the total number of U.S. operating blast furnaces as of early 1975.* Of these 32 blast furnaces, 27 (i.e., about 77 percent of the total) had less than 6 slip-induced bleeder valve openings per month as a yearly average value. Five blast furnaces (i.e., about 23 percent of the total) had more than 16 slip-induced bleeder valve openings per month as yearly average values. The average number of bleeder-valve openings per month for those five furnaces was about 30 per month.

The data presented herein should not be taken as a basis from which a precise single-valued national value for slip-induced bleeder-valve opening per furnace per month can be derived. As previously stated, the data in Figure 4 are for several different years and for

---

* Of a total of 197 furnaces there were 135 blast furnaces in blast in the U.S. as of January, 1975. As of January 1, 1976, the number of active furnaces had decreased to 119.

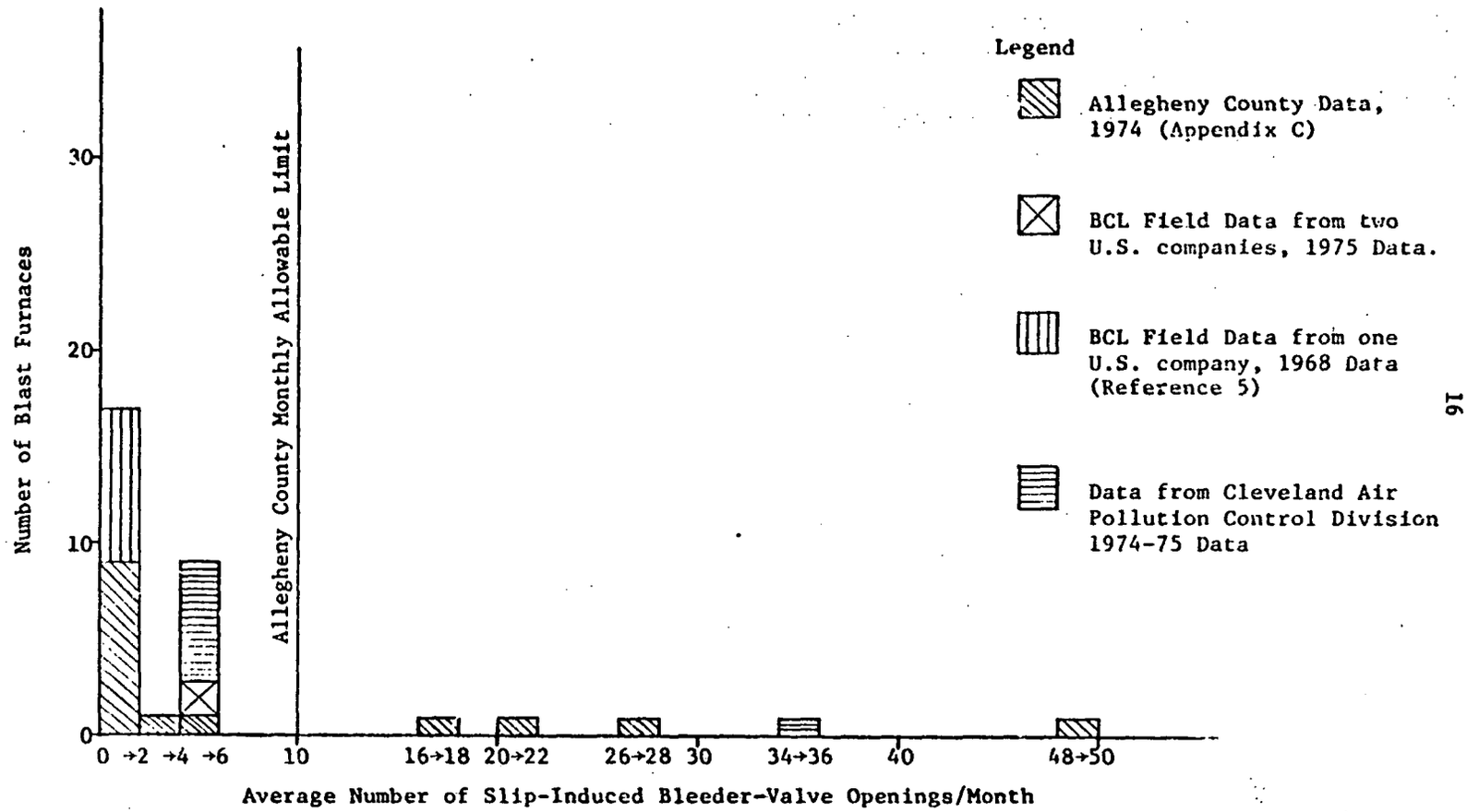

FIGURE 4. BARGRAPH OF NUMBER OF BLAST FURNACES WITH GIVEN NUMBER OF BLEEDER-VALVE OPENINGS/MONTH

different practices. The data represent about 25 percent of the total number of active blast furnaces in the United States. However, based on these data and on the general impression arrived at through interviews and discussions with plant personnel and environmental control groups, we believe that the general industry-wide situation is comparable to the trends indicated in Figure 4. That is, we estimate that, for more than 80 percent of the operating blast furnaces (i.e., for about 100 to 110 blast furnaces), the bleeder valves are opened only a few times per month as the result of furnace slips. However, for each of 15 to 25 furnaces in the U.S., the bleeder valves may be opened in conjunction with slips between 20 and 40 times per month on an annual average basis.

Battelle researchers attempted to gather information and data about the causes of the higher frequency of slip-induced bleeder-valve emissions for the five "problem" furnaces identified in Allegheny County and Cleveland. No single factor or combination of factors was found to correlate with the greater occurrence of bleeder-valve openings in these furnaces than in any others. The five furnaces all had hearth diameters of less than 26 feet. However, this fact alone is an inadequate explanation as to the cause of frequent bleeder-valve emissions, because there are many other 26-foot and smaller blast furnaces in operation for which bleeder-valve emissions are not a reported problem.

Duration of Slip-Induced Bleeder-Valve Emissions

Blast-furnace bleeder valves are open for the time period that the furnace top pressure due to the slip exceeds the pressure required to open the bleeder valves. The duration of the pressure pulse associated with slips typically is from several seconds up to about 30 seconds. All the blast-furnace operators and representatives of various environmental control groups questioned during this study indicated that bleeder valves are seldom open more than 30 seconds in

response to a furnace slip. Emission times of 30 seconds or less are also consistent with measurements made by Battelle investigators while observing ten operating blast furnaces for several days.

In some cases, there may be an additional 30-second emission period following the slip-induced bleeder-valve emission. This is associated with the operator-imposed opening and closing of the valves in an effort to seat and reseal the bleeder-valve unit.

In keeping with the above discussion, the temporal duration of slip-induced bleeder-valve emissions is taken to be 30 to 60 seconds. It should, however, be recognized that these times are probably longer than most emission times associated with slip-induced bleeder-valve openings.

The Quantity of Gas and Dust Issuing From Opened Bleeder Valves

Little or no measured data are available relating the quantity or flow rate of gas issuing from an opened bleeder valve. The quantity of dust emitted and the dust-loading factor are also unknown.

Gas-flow rates and dust-loading factors are known characteristics for most blast furnaces which are operating in the normal controlled condition. However, during periods of furnace irregularities (such as during slips) it is thought that the gas-flow rate and dust loading differ from these normal steady-state values.

Because no data relating gas and dust quantities emitted in conjunction with blast-furnace slips were found, it was considered desirable to develop a calculated estimate for these variables. Estimates of the quantity of gas and dust emitted from slip-induced bleeder-valve openings are developed in Appendix E. Based on the model and assumed conditions presented in Appendix E, it is estimated that about $18.2m^3$ (650 SCF) of gas are generated during a 0.61 meter (2 foot) slip in a 9.1-meter (30-foot) blast furnace. Assuming that the dust loading during the slip is 10 to 100 times greater than the maximum normal dust loading implies that between 12.5 and 125 kilograms

(28 to 276 pounds) of dust are contained in the emitted gas. Thus, if the entire volume of emitted gas were released from the dirty-gas bleeder valves, an estimated quantity of dust in the range of 28 to 275 pounds would be emitted for a "2-foot" slip in a 30-foot-diameter furnace.

These estimated quantities of dust associated with a slip are considered conservative (i.e., it is doubted that the actual quantities of dust released exceed these estimates). For example, a 2-foot-high cavity would seldom, if ever, exist across the entire diameter of the furnace. Other input data used to develop these values (such as cavity gas temperature and pressure) are believed to be realistic estimates of the actual conditions associated with the slips.

The gas-volume and dust-quantity estimates presented here are offered as a means of arriving at an order-of-magnitude value for the quantity of dust emitted from a dirty-gas bleeder valve due to slips. To the best of our knowledge, no data exist to confirm or refute the estimate presented.

Little or no data are available on the composition and size distribution of the particulates emitted from the slip-opened bleeder valve. Certainly, the expected compositions of the particulates are those of the burden charged to the furnace (i.e., iron oxide, coke, and limestone). No estimate of the size distribution of the dust is presented here, because these data are not believed to constitute a primary factor in judging the significance and/or severity of the emissions from the slip-opened bleeder valves.

The gas emitted from the bleeder valves is expected to be of a composition comparable to the normal furnace offgas mixture (i.e., about 25 percent carbon monoxide, 15 percent carbon dioxide, 4 percent hydrogen, balance nitrogen). Because of the carbon monoxide content, the venting of the gas is performed at the top of the furnace and/or the gas is flared.

The data presented in this section can be used to formulate a quantitive assessment of the severity of bleeder-valve emissions as a national and local air-pollution problem. Such an assessment is

developed in the following section of this report. However, the results of the computations are heavily dependent upon the assumptions that have been made.

IV. Evaluation of Slip-Induced Bleeder-Valve Emissions as a Source of Air Pollution

Based on the data presented in the preceding sections of this report and supplemental data provided herein, the seriousness of blast-furnace bleeder-valve emissions resulting from slips can be estimated. The following statements and supporting discussion summarizes Battelle's evaluation of blast-furnace bleeder-valve emissions as a source of air pollution.

- Slip-Induced Blast-Furnace Bleeder-Valve Emissions Are Not An Industry-Wide or Nation-Wide Problem.

As depicted in Figure 4, bleeder-valve openings due to slips are a relatively infrequent occurrence for the majority of blast furnaces operating in the U.S. For the 32 blast furnaces (about 1/4 of the total number of U.S. furnaces as of early 1975) for which bleeder-valve opening data were collected, about 75 to 80 percent of the furnaces experienced fewer than 6 emissions per month*. These data are consistent with and reinforced by the responses of many representatives of both iron and steel companies and regional air-pollution control groups to the effect that blast-furnace bleeder-valve emissions occur infrequently and are of only minor concern as a source of air pollution at most individual plants and/or in given geographic regions of the U.S. Representatives of regional EPA offices in Region 4 (Atlanta, Georgia) and Region 3 (Philadelphia, Pennsylvania), and representatives of local air-pollution control groups in California and Maryland indicated that blast-furnace bleeder-valve emissions were not considered by them as a significant source of air pollution within their regions of jurisdiction.

---

* Nearly 50 percent of the furnaces experienced fewer than two slip-induced bleeder-valve emissions per month.

- Blast-Furnace Bleeder-Valve Emissions May Constitute an Individual Furnace And/Or Local Air-Pollution Problem

Data from the Allegheny County Health Department and from the City of Cleveland indicate that there are individual blast furnaces which experience bleeder-valve emissions with sufficient frequency to warrant concern. Based on the data in Figure 4, 5 of the 32 furnaces for which data were available had between 20 and 50 (an average value of 30) bleeder-valve emissions per month. Accepting the 16 percent figure (i.e., 5 of 32) as representative of the total U.S. ironmaking industry would imply that there were about 22 "problem" blast furnaces in early 1975. Assuming that each of these 22 furnaces experienced 30 slip-induced bleeder-valve emissions per month with an emission of 30 to 275 pounds of dust for each slip would result in an average annual dust emission of about 5 to 50 tons (4.5 to 45 tonnes) per year per furnace. The total annual dust emission from all 22 blast furnaces would be from 110 to 1100 tons (99 to 990 tonnes).

Assuming that the remaining 113 blast furnaces operating in the U.S. in 1974-1975 (for a total number of 135 furnaces) averaged four slip-induced bleeder-valve emissions per month indicates that there was a total of about 13,350 slip-induced bleeder-valve emissions in the U.S. in 1974. The 22 furnaces (i.e., 16 percent of the furnaces) with the higher emission frequency account for nearly 60 percent of this total.

In considering the probable geographic distribution of the estimated 22 frequently emitting blast furnaces, it is considered likely that no more than four to five such problem blast furnaces are operating in a given local community.

- Slip-Induced Bleeder-Valve Emissions Are A Smaller Air-Pollution Source Than Are Other Iron and Steel Plant Operations

Based on the data presented in the previous section, the total number of slip-induced bleeder-valve emissions in the U.S. in 1974 is estimated as about 13,350. For a dust loading of 28 to 276 pounds per slip, the quantity of dust generated for the U.S. in 1974 from

this source was between 187 and 1842 tons (170 and 1671 tonnes). In 1975, the U.S. iron makers produced 79.9 million net tons of hot metal. Thus, the quantity of dust generated in blast-furnace bleeder-valve emissions resulting from slips normalized to the blast-furnace production ranges from about 0.005 to 0.046 pound of dust per net ton of hot metal*. In comparison, the estimated emission factors (i.e., pounds of dust emitted per ton of product) associated with the blast-furnace cast-house operation range from about 0.12 to 0.61 pound of dust per net ton of hot metal.[12] Combining the cast-house emission factor with the 79.9 million net ton of hot metal produced in 1975 indicates that between 4790 and 24,370 tons of cast-house dust were generated in the U.S. in 1975**.

Another basis for comparison is associated with the charging and tapping of the basic oxygen furnace (BOF). Based on an article by Mattis[13], an estimated emission of between 2.3 and 13.8 pounds of dust per ton of steel is associated with the charging and tapping emissions of the BOF. Because 71.8 million tons of BOF steel were produced in the U.S. in 1975, the total quantity of dust generated from this source is estimated to be between 82,600 and 495,400 net tons.

These comparisons are given in Table 2.

TABLE 2. COMPARISON OF SEVERAL IRON AND STEEL PLANT AIR-POLLUTION SOURCES

Emission Sources	Estimated Emission Factor (pounds per ton of product)	1975 U.S. Production (million tons)	Estimated Annual Total Dust Emission (net tons)
Blast-furnace bleeder valves	0.005 - 0.046	79.9	187 - 1842
Blast-furnace cast house	0.12 - 0.61	79.9	4790 - 24,370
BOF Charging and tapping	2.3 - 13.8	71.8	82,600 - 495,400

* The U.S. 1974 hot-metal production was 95.9 million net tons. Using this production figure implies emission factors between 0.004 and 0.038 pound of dust per net ton of hot metal.

** EPA is currently funding a study to assess the blast-furnace cast-house emission problem.

The blast-furnace bleeder-valve emission factors presented in Table 2 are based on the total 1975 U. S. production of hot metal. Bleeder-valve emission factors for individual blast furnaces can be derived from knowledge of the individual furnaces' bleeder-valve emission frequency and the furnaces' productivity. Thus, for example, a blast furnace which produced 1300 tons of hot metal per day and experienced 4 slip-induced bleeder-valve emissions per month would have an estimated bleeder-valve emission factor in the range of 0.003 to 0.028 pounds of dust per ton of hot metal. If this 1300 ton per day furnace experienced 30 slips per month (i.e., was a "problem" furnace), then the estimated bleeder-valve emission factor for that furnace would range from 0.022 to 0.212 pounds of dust per ton of hot metal. It should be noted that the bleeder-valve emissions factor associated with a furnace having a relatively high frequency of slip-induced bleeder-valve emission(e.g., 30 bleeder emissions per month) is comparable to the estimated emission factors for the blast-furnace cast house. Thus, the developed emission factors support the premise that blast-furnace bleeder-valve emissions may constitute an individual and/or local air pollution problem.

The slip-induced bleeder-valve emissions based on national production figures appear to be small relative to the emissions of other in-plant air-pollution sources. Based on these data, and the responses from representatives of several air-pollution control groups, the bleeder-valve emission problem appears to be of secondary concern on a national basis, relative to other potential air-pollution sources. However, this source of air pollution may constitute a local air pollutent comparable to other known sources.

- The Frequency of Occurrence of Blast-Furnace Slip-Induced Bleeder-Valve Emissions Has Diminished Over the Last 20 Years

Many of the blast furnace operators interviewed during this study indicated that the frequency of occurrence of slips and bleeder-valve openings is significantly less today than 20 years ago. While slip-induced bleeder-valve openings data are difficult to obtain for blast-furnace operations of years ago, it appears that the frequency of slips has diminished because burden quality and preparation have improved. This is supported by the observation that slip frequency used to be reported in the framework of several tens of slips per day[2], whereas today's frequencies are generally on a scale of several to tens of slips per month.

While the trend of decreasing frequency remains to be confirmed with 1976 and future data, the Allegheny County Health Department Data presented in Table 1 reflects a reduction in bleeder-valve emissions resulting from slips from 1974 to 1975. As blast-furnace operations are continuously updated in terms of improved burdens and operating practices and equipment, the frequency of slip-opened bleeder-valve emissions is expected to lessen until only a few blast furnaces operate with more than several bleeder-valve emissions per month.

V. Method and/or Procedures for Reducing Slip-Induced Bleeder-Valve Emissions

Given that a particular blast furnace consistently experiences a significantly higher frequency of bleeder-valve emissions than other blast furnaces, some of the choices that may be available to improve the situation are (1) improvement in the physical and chemical characteristics of the burden material charged to this furnace and (2) equipment

modifications to cope with the pressure surges without releasing particulates to the atmosphere. Coping with the slip pressure surge involves taking corrective or anticipatory actions to minimize the pressure rise, or using systems which are capable of containing the surge within the gas-processing system.

The burdening of blast furnaces is (1) a complex subject, (2) an area where dramatic improvements have been made in the recent past, and (3) the subject of continuing intensive study. Before blast-furnace burdens were upgraded to gain improved furnace performance, emissions from the bleeder valves were frequent and part of the normal operation. With improvement in burdening (and other operational considerations), blast-furnace operations have become less erratic and bleeder-valve openings are now a less frequent occurrence.

The improvement of blast-furnace burdens is an ongoing endeavor with most iron makers. It is expected that future improvements will lower the frequency of bleeder-valve-opening emissions on all furnaces. The iron and steel companies are well aware of the interrelation between burden improvements, improved operations, lower overall costs, and reduced irregularities. However, implementation of improvements can be difficult and slow. As one example of technical difficulties, it should be noted that in the last several years blast-furnace operators have reported that the quality of coke, and particularly the variability in the quality of coke (strength, ash content, etc.), has been causing operational problems in blast furnaces. This is a second-order result of the problems and marketing upsets that have occurred in the U.S. coal industry. The increased demand for low-sulfur coal, the lower productivity in coal mines, and the decreased attention to grading and cleaning of coals during peak demand periods have contributed to the problem of variable-quality coke. This problem has negatively affected blast-furnace performance worldwide. The problem, and the search for a solution, is continuing. The fact that the problem is continuing is evidenced by the panel discussion devoted to the subject at the March, 1976, Ironmaking Conference in St. Louis, Missouri. Given the effort that is being expended to regain control over coke quality and consistency, it is to be expected that in the future a recovery will be accomplished, overall

improvement in the blast-furnace burdening will be resumed, and future irregularities will be decreased.

The high frequency of bleeder-valve openings on a few furnaces is of concern to some regional or local air-pollution control authorities. Because of the complexity of the subject of burdening of individual furnaces, Battelle researchers have no specific recommendations in this regard. Discussions with officials of steel companies that have problem blast furnaces indicate that the frequency of bleeder-valve openings is being decreased. However, these officials did not feel that they were in a position to discuss individual furnace burdening or coke quality. Thus, Battelle researchers do not know in detail the means by which the performance of particular individual furnaces is being improved. The fact that performance is being improved is encouraging, and it is believed that the operating improvements may result mostly from improved burdening of these furnaces.

It is important to realize that the quality of burden being charged to individual furnaces today is frequently the result of decisions made years earlier. It is a generalization that, as the general level of blast-furnace burden quality and consistency is increased within a steel company, the best and most consistent quality burden is most often charged to their newest and largest blast furnace. With time, continued improvements in burden quality are passed on to the older and generally smaller furnaces. This, in part, may account for the observation that the blast furnaces presently experiencing a higher frequency of slip-induced bleeder-valve openings per month are, relatively speaking, smaller furnaces.

Burden-improvement considerations aside, it is the judgement of Battelle researchers that changes and improvements might be made in blast-furnace equipment and procedures to decrease the frequency of bleeder-valve openings. These suggestions are discussed in the following text, and should be considered in the event that the frequency of bleeder-valve openings cannot be brought below regulatory limits by means of burden and/or practice improvements. Blast-furnace operators are in agreement that each blast furnace has individual characteristics. This is another form of the statement that "not all that needs to be known about blast-furnace operations is known". Assuming that the frequency of

bleeder-valve openings is not brought under control at a particular blast furnace, the following suggestions are offered for consideration.

1. Evaluate the Possibility of Increasing the Pressure-Release Setting on the Bleeder

When asked what he did to prevent frequent popping-off of the bleeder valves, one blast-furnace superintendent stated that he:

- Increased the weight on his dirty-gas bleeders so that they would open only at a higher pressure,
- Began using in the charge more "cleaners" of both mechanical and chemical types, and
- Went into earlier checking practice when hanging was indicated.

In this instance, the structural strength of the blast furnace (and the gas-processing system) structure were analyzed. It was found that the pressure-release setting at the dirty-gas bleeders could be increased without rupturing the furnace or the gas-processing system during a slip. In effect, many of the pressure surges occurring in the furnace were contained. That is, the increase in pressure was drawn off through the gas-processing system without opening the dirty-gas bleeders This rather simple alteration may not be possible at many of the older furnaces. The subjects of checking (periodic lowering of the wind rate on a furnace) and the use of cleaners are discussed in the following test.

2. Consider Retrofitting Advance-Design, Gas-Processing Systems to Existing Furnaces

In 1952, K. G. Le Viseur, et al., was awarded a U.S. letter patent, assigned to Republic Steel Corporation, entitled "Bleeder and Equalizer For Blast Furnaces".[4] Figure 5 is the main drawing given in this patent. A copy of the Le Viseur patent is included in this report as Appendix F. This patent is "particularly concerned with apparatus by which clean gases may be used to equalize the pressure on opposite sides of the charging bell and may also be vented to the atmosphere instead of

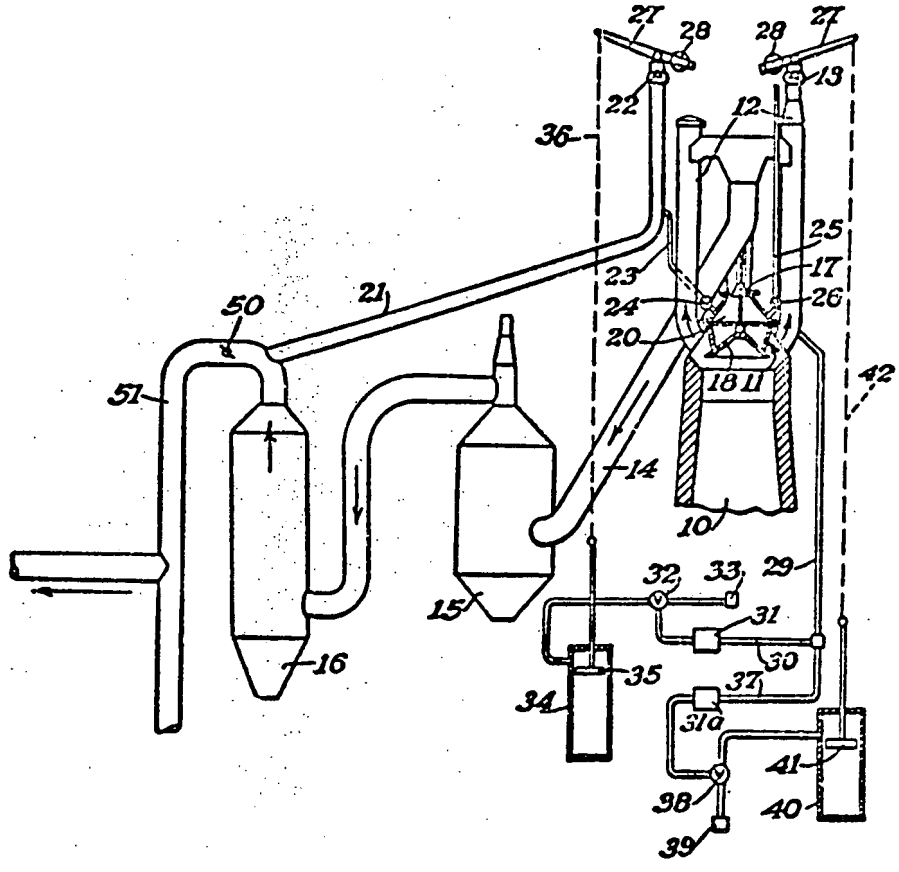

FIGURE 5: BASIC SYSTEM DESIGN FOR SEMI-CLEAN GAS BLEEDER-VALVE UNIT (4)

dirty gas whenever slips and rolls of the furnace occur which are of minor or moderate intensity". Referring to Figure 5, Le Viseur proposed installing a duct downstream of the first gas-cleaning unit to the top of the furnace for venting gas-pressure increases. The system consists of Items 21, 22, 27, and 28 in the drawing. Quoting from the patent, "where delivery gas is vented to the atmosphere either from the hopper chamber or from the furnace by reason of slips and rolls, much dirt is discharged and constitutes a nuisance to adjacent buildings and residences. Among the numerous advantages of this venting only clean gas is the fact that bleeder-valve erosion, which is especially serious in furnaces operating at high top pressure, is substantially reduced. Sudden moderate increases in gas pressure in the furnace caused by slips and rolls may be relieved this way and the gas allowed to escape through valve 22 is clean, coming as it does from the washer and hence is not a public nuisance".[4]

In this report, we refer to this type of system as the semi-clean bleeder system because the dust content in the gas released from downstream of the first gas-cleaning unit may still be about 0.09 gram per cubic meter (about 0.04 grain per cubic foot).

The semi-clean bleeder system was installed on some furnaces built in the 1960's and 70's. Furnaces equipped with the semi-clean-gas bleeder system use the dirty-gas bleeders only as relief valves for handling heavy slips. In theory, the semi-clean-gas bleeder system could be retrofitted to older furnaces. Each furnace, however, would have to be individually examined. For example, in order for the semi-clean-gas bleeder to be effective, the pressure surge must be passed rapidly through the first cleaner. If the first scrubber appreciably resists the gas flow, the dirty-gas bleeder will sense the slip-induced pressure pulse and open before the semi-clean-gas bleeder has received a signal. In some instances, it may be advantageous to replace the existing scrubber with a fast-response, variable-throat, pressure-controlling scrubber. In attempting to judge whether this semi-clean bleeder system could be retrofitted to older furnaces, a brief study was made of the progress being made in gas-cleaning and gas-pressure-control systems. Discussions were held with builders and suppliers of equipment to blast-furnace

engineering companies. Representatives of one company (Air Pollution Industries of Englewood, N.J.) indicated that fast-response, variable-throat venturi scrubbers have been developed for cleaning blast-furnace gas for low-top-pressure furnaces. In this instance, the throat damper in the scrubber is made to open rapidly with increases in top pressure in order to pass more gas through the scrubber system. This pressure pulse can be totally contained within the remainder of the gas-cleaning system, or may be vented through a retrofitted semi-clean-gas bleeder. Variable-throat, pressure-controlling scrubbers have been retrofitted to older blast furnaces. However, to the best knowledge of Battelle researchers, these retrofit scrubbers did not include a rapid-response pressure-control system. Based on the available information, Battelle researchers judge that the modification of the gas-handling systems on old furnaces to the designs used on new blast furnaces would reduce the frequency of opening of the dirty-gas bleeder valves on a problem furnace. However, blast-furnace operators and design engineers within steel companies questioned the actual workability of the proposed retrofit considerations. These discussions, however, were limited in nature. Should this topic become one of need, i.e., for a blast furnace whose frequency of bleeder-valve openings cannot be brought under control, it is suggested that the workability of the approach could be evaluated in a demonstration project by adding the fast-response feature to an existing pressure-controlling, variable-throat scrubber system that has been recently retrofitted to a low-top-pressure blast furnace.

3. <u>Consider the Leone System as a Method for Reducing the Occurrence of Hangs and Slips</u>

Several references[3,14,15] have indicated that the frequency of occurrence of hangs and slips (including slip-induced bleeder-valve openings) can be markedly reduced by using a system known as the Leone Differential Pressure Control System for sensing and controlling the movement of materials in the blast furnace. The Leone system is based upon measuring and controlling the differential pressure drops across the burden of the furnace. Such a method or system may have potential for

reducing the emissions from a blast furnace which has consistently evidenced a high frequency of slip-induced bleeder-valve openings.

For example, the Leone system was evaluated in 1950-1951 on a blast furnace which had experienced numerous hangs and slips prior to the use of the differential control system.[14] The furnace (normally rated at about 560 to 700 tons of hot metal per day) had experienced an average of 33 slip-induced bleeder-valve openings per month for the 6-month period prior to usage of the control system. The slip-induced bleeder-valve opening frequency dropped to an average of 9 per month for the 6-month period after the differential pressure system was put into operation, with no reduction in furnace production.

Leone and Adams[14] claim that the Leone type system will:

(1) Reduce the number of dirty-gas bleeder-valve openings,

(2) Decrease the frequency of hangs and slips, and

(3) To a limited extent, increase furnace production.

These claims are all positive in terms of improved furnace performance. Discussions with Mr. Leone, blast-furnace builders, and blast-furnace operators indicated that the Leone system was not widely accepted by the iron-making industry. It was not possible, within the time frame of this study, to find out why the system was not accepted and/or used. A logical question becomes: Was it technically or economically unacceptable? The claims made for the Leone system are of interest to the topic of this study and Battelle researchers suggest that a reexamination and evaluation of this system may be in order. The ironmaking industry may have in hand information to confirm or refute the Leone claims.

It is suggested that the Leone control system be examined in the framework of technology of the 70's. It is assumed that this report will be read by blast-furnace technologists in many steel companies. The authors of this report would appreciate receiving any information and judgements concerning the differential pressure-control approach.

(4) Evaluate the Performance of Blast-Furnace "Cleaners" with Regard to Lowering Slip Frequency

The use of cleaners to prevent or eliminate the buildup of accretions on the inside walls of blast furnaces (and thereby lower the

number of hangs, slips, and other operating irregularities) is somewhat controversial within the blast-furnace industry. Some blast-furnace operators believe in the copious use of cleaners, such as calcium chloride, to reduce and/or remove the accretion formations, while others do not. In many instances those that do not advocate cleaner usage have had little or no improvement in blast-furnace performance when they incorporated cleaners in their practices.

The term "cleaners" in this instance includes both "mechanical" cleaners (selective use and placement of scrap iron and coke to scour the furnace lining) and "chemical" cleaners (such as calcium chloride additions) to assist in the removal of detrimental alkalis from blast furnaces.

It appears to the Battelle researchers that the steel industry would benefit from a systematic study of the use of cleaners as a method for improving blast-furnace performance. It is considered probable that studies are being conducted at individual steel companies on this subject. However, a joint effort, particularly if this has not been done, should be beneficial.

(1) Slater, J. H., Round Table Discussion on Special Phases of Blast-Furnace Operations - The High-Pressure Furnace, Blast Furnace, Coke Oven, and Raw Materials Committee Proc., AIME, Vol. 6, 1947, p 112.

(2) Slater, J. H., "Operation of the Iron Blast Furnace at High Pressure", Yearbook of the American Iron and Steel Institute for 1947, May 21, 1947, p. 151.

(3) Leone, O., Written Discussion to Paper presented by Fulton, L., Proc. Blast Furnace, Coke Oven, and Raw Materials, AIME, Vol. 9, 1950, p 306

(4) U.S. Letters Patent No. 2585800, K. G. LeViseur and L. Larson, Inventors, "Bleeder And Equalizer For Blast Furnaces", Issued Feb 12, 1952.

(5) Final Technological Report on A System Analysis Study of the Integrated Iron and Steel Industry (Contract No. PH 22-68-65) to Division of Process Control Engineering, National Air Pollution Control Administration, May 15, 1969 (Prepared by Battelle Memorial Institute), p v-8.

(6) The Making, Shaping, and Treating of Steel. Ninth Edition, U.S. Steel Corporation, Pittsburgh, Pennsylvania, 1971.

(7) McBride, D. and Miller, R., "Design and Operations of Youngstown's 32-ft. Hearth Blast Furnace", AIME Ironmaking Conference Proc., 1968.

(8) Towndrow, R. and Banks, W. "Some British Aspects of High Top-Pressure Operation" AIME Proc. Blast Furnace, Coke Oven, and Raw Materials Conf., Vol. 12, 1953, p. 257

(9) Letter dated February 2, 1976, to Mr. Howard Weisz, Administrator, Bureau of Air Pollution Control, Pittsburgh, Pennsylvania, containing Blast Furnace Slips Records for weeks of 12-22-75 and 12-29-75.

(10) Rules and Regulation, Article XVIII, Air Pollution Control, Allegheny County Health Department, Pittsburgh, Pennsylvania, Effective Date June 15, 1972, p 16.

(11) Letter from Gregory S. Travassos, Division of Air Pollution Control, Department of Public Health and Welfare, City of Cleveland, Ohio, to Mr. Harold Lownie, Battelle Columbus Laboratories, Dated March 1, 1976.

(12) Progress Report #6, "Blast Furnace Cast House Emission Control", prepared for U.S. EPA by Betz Environmental Engineers, Inc., under Contract No. 68-02-2123.

(13) Mattis, R.P., "An Evaluation of Charging and Tapping Emissions For the Basic Oxygen Process". 68th Annual Meeting of the Air Pollution Control Association, Boston, Massachusetts, June 15-20, 1975.

(14) Adams, L.W., "Operating With Leone's Differential Pressure Control at Neville Island Blast Furnace". AIME Proc. Blast Furnace, Coke Oven and Raw Materials Conf., Vol. 11, 1952, p.24.

(15) O. J. Leone, Inventor:
(a) U.S. Patent No. 2625386, "Method and Apparatus For Controlling Blast Furnaces", Issued January 13, 1953.
(b) U.S. Patent No. 2814479, "Blast Furnace Control System" Issued November 26, 1957.
(c) U.S. Patent No. 3092680, "Blast Furnace Control System" Issued June 4, 1963.

(16) Elliott, J., Buchanan, R. and Wagstaff, J., "Physical Conditions in the Combustion and Smelting Zones of a Blast Furnace", Journal of Metals, Transactions AIME, July 1952, p. 709.

(17) Bates, M., "Aerodynamic Model of the Blast Furnace", Developments in Iron Making Practice, Iron and Steel Institute, London, 1973, p. 160.

(18) Higuchi, M., Ilzuka, M. and Shibuya, T., "High Top Pressure Operation at NKKK", Ibid, p. 98.

(19) Philbrook, W., "Analysis of Factors that Limit the Production Rate and the Coke Rate in the Iron Blast Furnace", Proc. Blast Furnace, Coke Oven, and Raw Materials Conference., AIME, Vol. 13, 1954, p.208.

(20) Sagawa, K. and Ishikawa, H., "Analysis of Factors Limiting the Blast Furnace Productivity", Transactions ISIJ, Volume 8, 1968, p. 172.

(21) Archibald, W., Brown, T. and Leonard, L., "Proposal for a Self Lining Blast Furnace", Journal Iron and Steel Institute, Vol. 188, September 1957, p. 32.

(22) Fulton, L., "Lessons from a Hanging Blast Furnace", Proc. Blast Furnace, Coke Oven, and Raw Materials, AIME, Vol. 9, 1950.

(23) Wagstaff, J., "A Report on Solid Movement in Blast Furnace Models", Proc. Blast Furnace, Coke Oven, and Raw Materials, AIME, Vol. 14 1955, p 298.

(24) Notini, U., "Experience with Sinter Burden in Swedish Blast-Furnaces", Journal Iron and Steel Institute, Vol. 189, August 1958, p. 322.

(25) Larsen, B., "Some Questions on Interrelated Processes Going On in the Blast Furnace", Proc. Blast Furnace, Coke Oven, and Raw Material, AIME, Vol. 6, 1947, P. 118.

(26) Blast Furnace - Theory and Practice, Volume 2, J. H. Strassburger - Ed. Gordon and Breach Science Publishers, New York, 1969, p. 306.

APPENDIX A

FACTORS CONTRIBUTING TO BLAST-FURNACE HANGING

Factors Contributing to Blast-Furnace Hanging

At least five separate causes of hanging have been proposed.[6]*

(1) Previously fused slag and molten iron may resolidify by passing from a hotter to a cooler region of the furnace or by alteration of composition, thereby causing an impervious mass, which in turn interrupts the smooth movement of the stock.

(2) An excessive quantity of fines (i.e., relatively small particles) in the coke and/or insufficient coke stability, wherein the coke fines become wedged between the larger coke particles and lumps, thereby restricting the gas flow and causing arching of solid material in the furnace.

(3) Fine carbon formed via the Boudouard reaction ($CO_2 + C \rightleftharpoons 2CO$) may also fill the interstices of the burden and, in turn, impede the upward flow of gases.

(4) Alkalis, such as the oxides of sodium and potassium, may also contribute to the hanging condition. In many instances, the alkalis lead to the formation of accretions and scabs which adhere to the furnace walls. These formations then interfere with the distribution of gas inside the furnace and prevent the smooth downward movement of the burden.

(5) Overblowing the furnace, or an excess of air (wind) introduced to the furnace relative to the character (i.e., permeability) of the particular burden may contribute.

Various physiochemical models which incorporate the above factors have been developed to predict and/or explain the onset of hanging.

---

* References are given on page 33.

For example, one model which is frequently used to describe hanging in the bosh section of the furnace is based on the phenomenon known as "flooding", which occurs when the force of the descending fluid (e.g., the liquid slag) balances the force of the ascending gas. When the flooding condition occurs in the bosh, the liquids are carried back up the furnace into a lower temperature region, where they resolidify. An impermeable region is formed and, as a consequence, the gas velocity through the remaining open portion of the bed increases thereby generating a self-aggravating situation. Elliott, et al,[16] developed a correlation between two parameters, a fluid ratio and a hanging ratio, which in turn can be used to derive a critical condition for the onset of hanging due to bosh flooding. This proposed critical condition is given by the relation:

$$(\text{hanging factor})^2 \times \text{fluid ratio} < 10^3, \qquad \text{[A-1]}$$

where the hanging factor is a set of parameters which is essentially a balance between the opposing forces of the liquid and gas across the bed, and the fluid ratio is a measure of the relative amounts of gas and liquid.

Introducing further assumptions about the conditions existing within the bosh zone, a critical bosh flooding criterion can be stated as:

$$\frac{W}{(D^2\sqrt{d_c})} < C_1 \qquad \text{[A-2]}$$

where

W = wind volume (m^3/second)

D = blast-furnace inner diameter (m)

d_c = mean coke size (mm)

C_1 = hanging factor, $\left(\frac{\sqrt{m}}{sec}\right)$

The relation given in Equation [A-2] indicates that, for hanging not to occur as a result of flooding, the wind volume divided by the product of the square of the furnace diameter and the square root of the mean coke size must be less than the C_1 value. For several blast-furnace operations, C_1 has a value of about $2.1\frac{\sqrt{m}}{sec}$.[17]

Although the bosh flooding model and other models are extremely valuable for understanding the complex interrelations among the furnace operating parameters which contribute to hanging, no model is sufficiently developed to fully define the conditions whereby the hanging phenomenon can be totally eliminated within a working furnace.

Practically all the models and formulations of the hanging pehnomenon indicate that the frequency of occurrence of hangs (and, in turn, slips) should diminish as the permeability of the burden increases.[18] While the burden permeability can generally be improved by stabilization of the physical and chemical properties of the charged materials, there is a limiting valu to which the permeability can be increased without significantly reducing furnace productivity.

As recognized by numerous workers, hanging, and in turn the conditions required to minimize hanging, is but one factor which determines furnace productivity.[19,20] For example, Segawa and Ishikawa[20] defined a suitable range of operating variables (i.e., acceptable combinations of coke and ore size, wind, and furnace diameter) by assuming that the four phenomena of (1) hanging due to flooding, (2) blowing through (channeling) of the gas, (3) heat transfer between gas and solid, and (4) reduction of iron ore, were the major factors determining productivity. The results of Segawa and Ishikawa's calculations are shown in Figure 6.

These results (e.g., Figure 6) are not presented in any absolute sense, but merely to indicate that the hanging phenomenon is but one factor to be considered in the operation of any blast furnace.

The conditions causing and associated with a hanging furnace are discussed in greater detail in References 16 through 26.

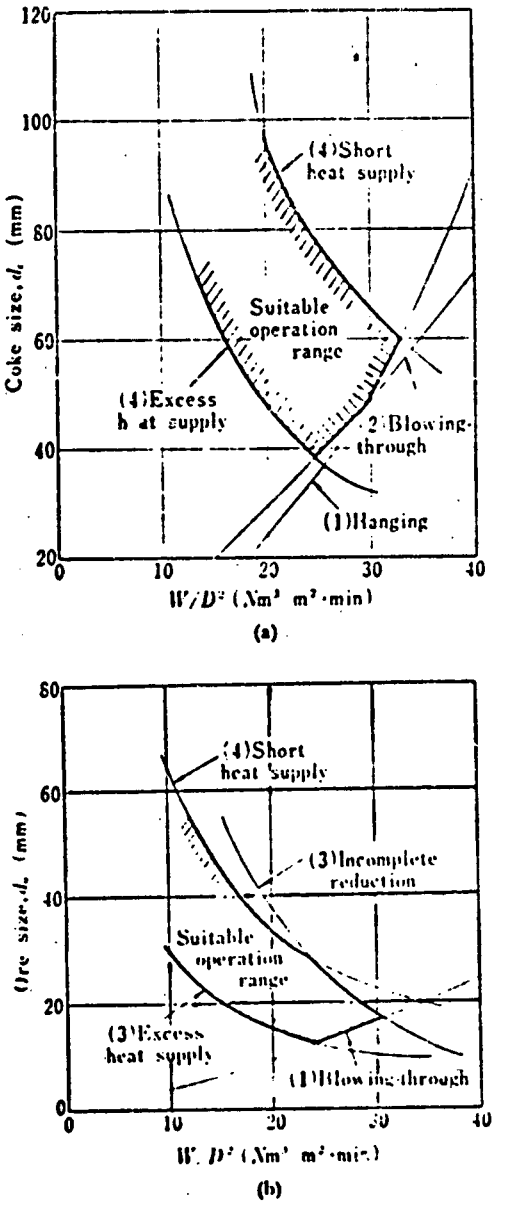

FIGURE 6. SUITABLE OPERATING RANGE FOR A BLAST FURNACE(20)

(a) Coke size versus $\frac{W}{D^2}$

(b) Ore size versus $\frac{W}{D^2}$

APPENDIX B

LETTER RESPONSE OF THE AMERICAN IRON AND STEEL INSTITUTE (AISI) TECHNICAL COMMITTEE ON BLAST FURNACE PRACTICE CONCERNING AVAILABILITY OF DATA ON SLIP-INDUCED BLEEDER-VALVE EMISSIONS

COMMITTEE CORRESPONDENCE

RECD JUN 25 1976

COMMITTEE:
AISI Technical Committee on
Blast Furnace Practice

ADDRESS WRITER CARE OF:
Interlake, Inc.
10730 Burley Avenue
Chicago, Illinois 60617

SUBJECT:
Battelle Study -
Blast Furnace Slips

DATE:
June 8, 1976

Dr. Carroll Mobley
Research Metallurgist
Primary Operations Section
Battelle
Columbus Laboratories
505 King Avenue
Columbus, Ohio 43201

Dear Dr. Mobley:

On May 18, 1976 you wrote to Mr. W. C. Benzer of the AISI concerning the Battelle Study on Blast Furnace Slips.

This letter was discussed in the recent meeting of the Technical Committee on Blast Furnace Practice and, as the newly appointed Chairman, I have been designated to respond.

Basically the information requested in the proposed questionnaire is not available. Obviously some of the design information could be made available such as "normal operating top pressure" but the companies are not recording such information as "the number of slips per month which open dirty gas bleeder valves".

We realize that Battelle has been commissioned to study the problem and as such are under an obligation to perform. We would like to aid you in this but since the information is not available we see only two alternatives: (1) that representative companies would install recording instrumentation to obtain the desired information --- this would take time and would be costly, and (2) Battelle would put observers in the field. This too would be costly and time consuming.

In all sincerity we feel that the current operating practice of blast furnaces with the relative rare slip that opens the dirty gas bleeder does not constitute an acute pollution problem. Therefore, the value of such a study is questionable.

I have discussed these and various other factors relating to the study with Mr. Hoffma of Battelle and will be glad to pursue them further with you if you so desire.

Sincerely,

J. W. Duncan, Chairman
Technical Committee on Blast
Furnace Practice - AISI

jwd/wd
cc: B.W.H. Marsden
W.C. Benzer

APPENDIX C

SECTION 1810.5: STANDARDS FOR SOURCES - BLAST-FURNACE SLIPS
RULES AND REGULATION; ARTICLE XVIII, AIR POLLUTION CONTROL
JUNE 15, 1972, ALLEGHENY COUNTY HEALTH DEPARTMENT

.5 Blast Furnace Slips

A. Emissions from blast furnaces shall be kept to a minimum. No person shall cause, suffer, or allow any blast furnace to emit air contaminants, as a result of a slip, more than sixty (60) times in any consecutive twelve (12) month period or more than ten (10) times in any consecutive thirty (30) day period. For the purpose of this Subsection, a blast furnace slip is defined as a sudden emission of gas containing particulate matter of an opacity equal to or greater than No. 2 of the Ringelmann Scale or of an equivalent opacity from the relief valves at the top of the furnace.

B. No person shall cause, suffer, or allow the operation of any blast furnace without providing a device for measuring and recording all blast furnace slips. Such device or devices must be approved by the Director.

C. All devices used for observing and recording blast furnace slips shall be maintained in good order. Safe and adequate means for inspection of such devices shall be provided by the person responsible for the blast furnace.

D. All persons responsible for blast furnaces shall make available to the Director, on request, the records of the required observation and recording devices. These records shall be deemed as an admission by the responsible person of the number of blast furnace slips occurring, but they shall not be deemed as a limit on the Director's action to present evidence that a greater number of slips occurred than the records indicate.

APPENDIX D

ALLEGHENY COUNTY HEALTH DEPARTMENT DATA

on

SLIP-INDUCED BLEEDER-VALVE OPENINGS PER MONTH FOR A FOUR-YEAR PERIOD

BLAST-FURNACE SLIP-INDUCED BLEEDER-VALVE OPENINGS PER MONTH OVER A FOUR YEAR PERIOD
(ALLEGHENY COUNTY HEALTH DEPARTMENT DATA)

Works	Blast Furnace #	Year	Month 1	2	3	4	5	6	7	8	9	10	11	12	Bleeder-Valve Openings Reported/ Number of Months	Yearly Avg Bleeder-Valve Openings/Month
Plant A	1	1972	-	-	-	-	2	3	-	0	7	3	2	0	17/7	2.4
		1973	-	-	-	-	No Data - Down				-	-	-	-		
		1974	-	-	-	-	No Data - Down				-	-	-	-		
		1975	-	-	-	-	No Data - Down				-	-	-	-		
	3	1972	0	0	0	0	0	0	-	0	2	0	-	0	2/10	0.2
		1973	0	-	1	0	0	0	0	0	0	-	2	-	3/9	0.3
		1974	0	0	0	0	1	4	4	0	2	2	0	1	14/12	1.2
		1975	1	0	1	0	0	0	0	0	2	-	-	-	4/9	0.4
	4	1972	0	0	0	0	0	0	-	-	-	-	-	-	0/6	0.0
		1973	-	-	-	-	-	-	-	-	-	-	-	-	-	-
		1974	0	0	0	0	1	11	1	1	4	0	2	0	20/12	1.7
		1975	3	0	0	0	2	2	4	3	4	-	-	-	18/9	1.7
	6	1972	4	7	10	12	1	13	-	2	9	4	0	0	62/11	5.6
		1973	0	-	3	17	11	1	0	13	0	-	1	0	46/10	4.6
		1974	8	0	3	4	8	5	7	9	2	1	-	-	47/10	4.7
		1975	1	0	0	0	0	Down-		-	-	-	-	-	1/5	0.2
	7	1972	-	-	-	-	2	3	-		7	3	2	0	17/7	2.4
		1973	3	-	4	0	11	5	12	36	11	-	14	-	96/9	10.7
		1974	15	5	6	30	61	50	29	29	24	4	4	3	260/12	21.7
		1975	9	18	7	10	13	5	Down	-	-	-	-	-	62/6	10.3
Plant B	1	1972	0	0	0	0	4	0	0	-	1	2	1	-	8/10	0.8
		1973	0	0	0	0	0	0	0	1	0	0	0	-	1/11	0.1
		1974	1	0	0	5	0	4	4	0	0	0	0	2	16/12	1.3
		1975	-	0	0	0	0	0	0	0	0	-	-	-	0/8	0.0
	2	1972	0	7	2	0	7	13	68	-	1	6	2	-	106/10	10.6
		1973	1	0	2	6	7	3	4	0	0	0	0	-	23/11	2.1
		1974	0	0	0	1	3	2	6	0	0	0	-	-	12/10	1.2
		1975	-	-	-	-	-	-	-	1	0	-	-	-	1/2	0.5

BLAST-FURNACE SLIP-INDUCED BLEEDER-VALVE OPENINGS PER MONTH OVER A FOUR YEAR PERIOD
(ALLEGHENY COUNTY HEALTH DEPARTMENT DATA)(CONT.)

Works	Blast Furnace #	Year	Month 1	2	3	4	5	6	7	8	9	10	11	12	Bleeder-Valve Openings Reported/ Number of Months	Yearly Avg Bleeder-Valve Openings/Month
Plant B	3	1972	-	-	-	2	8	0	3	-	31	14	19	-	77/7	11.0
		1973	34	16	65	53	21	156	22	4	16	18	25	-	430/11	39.1
		1974	46	15	32	6	2	6	6	3	5	52	77	75	325/12	27.1
		1975	32	47	25	23	23	28	5	4	5	Banked		-	192/9	21.3
	5	1972	-	-	-	-	-	-	-	-	-	-	-	-	-	-
		1973	0	0	0	0	0	0	0	53	47	70	92	-	262/11	23.8
		1974	89	62	78	56	60	46	31	11	11	48	Down	-	492/10	49.2
		1975	33	3	1	0	1	0	3	Banked		-	-	-	41/7	5.9
	6	1972	4	66	84	87	127	106	10	-	0	3	80	-	567/10	56.7
		1973	18	8	12	0	-	Down	-	-	-	-	-	-	38/4	9.5
		1974	0	0	0	5	4	27	46	26	24	29	Down	-	161/10	16.1
		1975	-	-	-	-	-	-	-	-	-	-	-	-	-	-
Plant C	1	1972	23	13	14	13	9	2	-	-	1	0	0	0	75/10	7.5
		1973	1	2	0	0	0	0	0	0	0	1	0	0	4/12	0.3
		1974	0	0	0	0	0	0	0	0	0	0	Down	-	0/10	0.0
		1975	0	Banked											0/1	0.0
Plant D	1	1972	8	22	19	4	1	13	0	0	0	0	0	0	73/12	6.1
		1973	3	10	1	2	0	0	0	0	0	0	0	0	16/12	1.3
		1974	0	0	0	0	0	0	0	0	0	0	0	0	0/12	0.0
		1975	0	0	0	5	-	-	-	0	-	-	-	-	5/5	1.0
	3	1972	5	2	1	8	4	3	0	1	17	8	83	70	202/12	16.8
		1973	19	17	15	5	2	21	0	0	49	8	74	-	210/11	19.1
		1974	6	1	-	6	9	0	0	0	0	0	Down	-	22/9	2.4
		1975	0	0	Banked		-	-	-	-	-	-	-	-	0/2	0.0

BLAST-FURNACE SLIP-INDUCED BLEEDER-VALVE OPENINGS PER MONTH OVER A FOUR YEAR PERIOD
(ALLEGHENY COUNTY HEALTH DEPARTMENT DATA) (CONT.)

Works	Blast Furnace #	Year	Month 1	2	3	4	5	6	7	8	9	10	11	12	Bleeder-Valve Openings Reported/ Number of Months	Yearly Avg Bleeder-Valve Openings/Month
Plant D	4	1972	1	0	0	1	0	3	2	0	0	0	0	0	7/12	0.6
		1973	0	0	0	0	0	0	0	0	0	0	0	-	0/11	0.0
		1974	0	0	0	0	0	0	0	0	0	0	4	0	4/12	0.3
		1975	0	0	0	0	0	0	0	0	0	-	-	-	0/9	0.0
	6	1972	3	0	0	0	0	1	0	0	0	0	0	1	5/12	0.4
		1973	0	0	0	2	0	0	0	0	0	0	0	-	2/11	0.2
		1974	0	0	0	0	0	0	0	-	-	-	0	0	0/9	0.0
		1975	0	0	0	0	0	0	0	0	0	-	-	-	0/9	0.0
Plant E	1	1972	0	0	0	0	0	0	0	0	0	1	0	0	1/12	0.1
		1973	0	0	1	Down	-	-	-	-	-	-	-	-	1/3	0.3
		1974	-	-	-	-	-	-	Up	0	0	-	-	-	0/2	0.0
		1975	0	0	Down	-	-	-	0	0					0/4	0.0
Total for Allegheny County Plants and Blast Furnaces Reporting																
		1972													1144/138	8.3
		1973													1128/124	9.1
		1974													1373/144	9.5
		1975													324/84	3.9

APPENDIX E

ESTIMATE OF QUANTITY OF GAS AND DUST ASSOCIATED WITH A BLAST-FURNACE SLIP

Estimate of Quantity of Gas and Dust Associated With a Slip

To estimate the amount of gas and dust occurring during a slip, the "piston" model is assumed applicable. In this model, the slip occurs when the upper portion of the burden falls to fill a previously existing cavity. One measure of the severity of the slip is the "fall" distance of the burden, or, in turn, the dimensions of the cavity. Assume that the cavity dimensions are the height, h, and the furnace diameter, d. Then the cavity volume, V, is $\frac{\pi}{4} d^2 h$. The number of moles of gas contained within the cavity and, in turn, released during the slip can be calculated via the ideal-gas relation.

$$n = \frac{pv}{RT} \qquad \text{(E-1)}$$

The number of moles of gas generated for a 2-foot (0.6096 m) slip in a 30-foot (9.144 m)-diameter blast furnace, wherein the gas pressure within the cavity, p, is taken as 29.4 psi*, absolute (2 atmospheres) and the temperature is 927 C (1200 K), are

$$n = \frac{2 \text{ atm} \cdot 40008 \text{ liters}}{0.082 \frac{\text{atm-liter}}{^{o}\text{K-mole}} \cdot 1200 \text{ K}} = 813 \text{ moles} \qquad \text{(E-2)}$$

The approximate gram-molecular weight of the offgas is 30 g/mole. The total mass of gas released is then about 24.4 kilograms, or about 54 pounds.

Converted to standard temperature and pressure conditions, the 813 moles of gas represents 18200 liters (643 SCF).

The dust loading of blast-furnace offgas is in the range of 2 to 30 grains** per standard cubic foot for "normal" operating

---

*The gas pressure within the cavity must be equal to or less than the blast pressure and greater than the top pressure of the furnace.

**1 grain equals $\frac{1}{7000}$ pound.

conditions. Under slip conditions it is reasonable to expect the dust loading to be greater than the normal value. Assuming that the dust loading is 10 to 100 times the maximum normal dust loading (i.e., 300 to 3000 grains/SCF) implies that 28 to 276 pounds of dust is contained in the slip-generated gas volume. Thus an estimated quantity of dust in the range of 28 to 276 pounds would be emitted per "2-foot" slip in a 30-foot-diameter furnace if the entire volume of slip-generated gas were released from the dirty-gas bleeder valves.

These estimated quantities of dust associated with a slip are considered conservative (i.e., it is doubted that the actual quantities of dust released exceed these estimates). For example, a 2-foot-high cavity would seldom, if ever, exist across the entire diameter of the furnace. Other input data, such as cavity gas temperature and pressure, are believed to be realistic estimates of the actual conditions associated with the slips.

Also based upon this model, the quantities of gas and dust generated in a given fall height slip should scale directly with the furnace diameter squared. Thus the quantity of the dust emitted from given fall slips should be less in smaller diameter furnaces than large.

The above calculation and assumptions are offered as a means of arriving at an order-of-magnitude value for the quantity of dust emitted from a dirty-gas bleeder-valve due to slips. To the best of our knowledge, no data exist to confirm or refute the estimate presented.

APPENDIX F

COPY OF U.S. LETTER PATENT ON
"BLEEDER AND EQUALIZER FOR BLAST FURNACES"

Feb. 12, 1952 K. G. LE VISEUR ET AL 2,585,800

BLEEDER AND EQUALIZER FOR BLAST FURNACES

Filed Sept. 3, 1947

Fig. 1

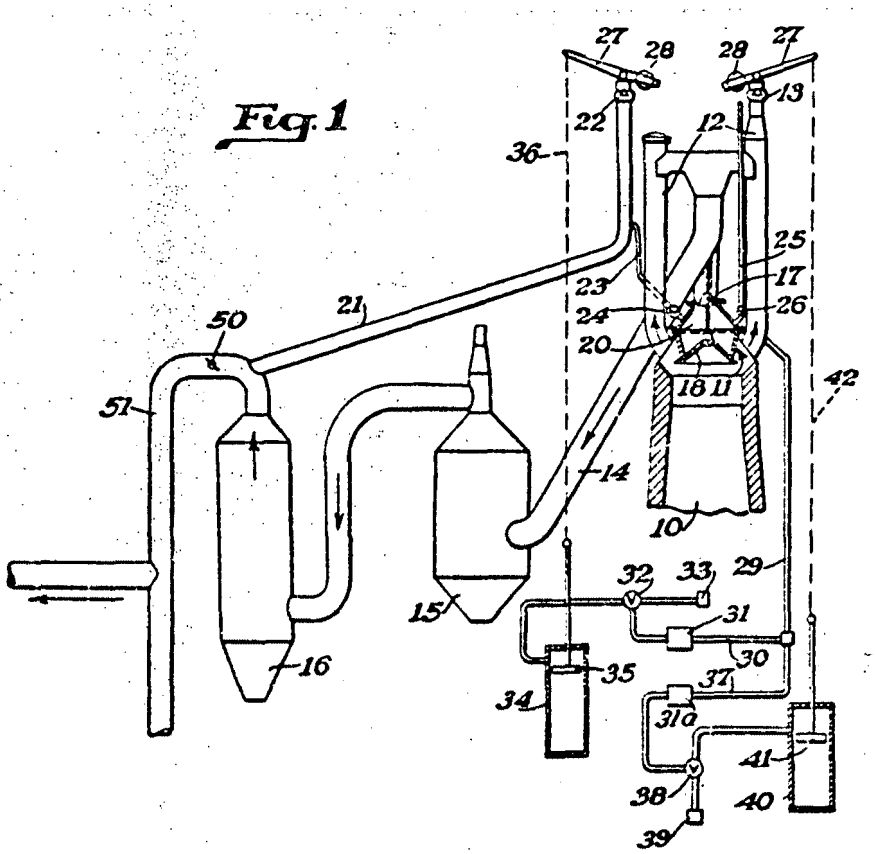

Fig. 2

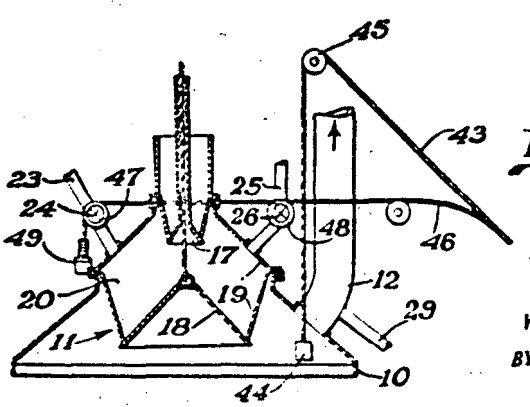

INVENTORS.
KURT G. LE VISEUR &
BY LEONARD LARSON.
Richey & Watts
ATTORNEYS.

Patented Feb. 12, 1952 2,585,800

UNITED STATES PATENT OFFICE

2,585,800

BLEEDER AND EQUALIZER FOR BLAST FURNACES

Kurt G. Le Viseur, Youngstown, and Leonard Larson, Shaker Heights, Ohio, assignors to Republic Steel Corporation, Cleveland, Ohio, a corporation of New Jersey

Application September 3, 1947, Serial No. 771,870

5 Claims. (Cl. 266—31)

1

This invention relates generally to the art of blast furnace construction and operation and is particularly concerned with apparatus by which clean gases may be used to equalize the pressure on opposite sides of the charging bell and may also be vented to the atmosphere instead of dirty gas whenever slips or rolls of the furnace occur which are of minor or moderate intensity.

Modern blast furnaces are provided with bleeders above the top of the furnace through which gases may escape in case of slips or rolls of the furnace. Such bleeders are located in upward extensions of the downcomers and permit the escape of dirty gases from the top of the furnace. Heretofore these bleeder valves have been set to open under low pressures to take care of minor slips or rolls. In conventional furnaces, intended to operate on pressures higher than conventional pressures which are on the order of two to three pounds per square inch, it has been proposed to remove dirty gases from the gas above the stock line and admit them into the space in the charging hopper between the two charging bells to increase the pressure on the outer or upper side of the lower or big bell to an amount approximately equivalent to the pressure within the furnace to facilitate lowering of the big bell during charging. In this connection it has been suggested that the gas in the charging hopper between the bells should be vented to the atmosphere through a short pipe at the top of the furnace controlled by a valve.

There are many disadvantages to use of the foregoing proposals. Where delivery gas is vented to the atmosphere either from the hopper chamber or from the furnace by reason of slips or rolls, much dirt is discharged and constitutes a nuisance to adjacent buildings and residences. Also, the solids in these gases are valuable and constitute a loss to the extent that they are carried out of the furnace.

The present invention is capable of use with furnaces operating at conventional pressures but is particularly important for use with furnaces operating at higher than conventional pressures. This invention only vents clean gas, that is, gas from the washer, to the atmosphere, from the hopper chamber or as a result of slips and rolls ranging up to a predetermined magnitude above that experienced in ordinary practice.

Among the numerous advantages of thus venting only clean gas is the fact bleeder valve erosion, which is especially serious in furnaces operating at high top pressures, is substantially reduced.

2

Our present invention further enables the automatic equalization of pressures between the double bell chamber and the atmosphere and between said chamber and the furnace. Thus when the small bell is dumping and the bell chamber is being charged, the chamber is open to the atmosphere, and when the large bell is being dumped to charge the furnace, the bell chamber communicates with a source of gas under pressure and is closed to the atmosphere so that the large bell may be opened easily although the furnace is being operated at relatively high internal gas pressures.

Briefly described, the present invention includes the usual blast furnace, dust catcher and washer connected together for the passage of gases from the furnace through the dust catcher and into the washer, means to conduct clean gas from the washer to the top of the furnace where it may be discharged into the hopper chamber, and a bleeder valve in the clean gas line which is set to open at a pressure considerably lower than the pressure at which the regular bleeder valves are set.

A better understanding of this invention and the reasons for its advantages will be gained by those skilled in the art upon consideration of the following detailed description and the drawings accompanying and forming a part of this specification, in which

Figure 1 is a diagrammatic sketch of a blast furnace assembly embodying the present invention, and

Figure 2 is an enlarged diagrammatic view of the upper part of the furnace of Fig. 1 including a double bell charging assembly.

In Fig. 1, the system includes a blast furnace 10 which is provided with a double bell charging assembly 11, top gas uptake conduits 12, a bleeder valve 13 in one of the uptake conduits, a downcomer 14 communicating with said conduits, a dust catcher 15 and a gas washer 16. Double bell assembly 11 includes a small upper bell 17 and a large lower bell 18 which are fitted to a charging hopper 19 which with the two bells defines a bell chamber 20 in which furnace charging material is loaded by action of the small bell and unloaded by movement of the large bell.

A clean gas pipe 21 extends upwardly from the top of the washer 16 to a point above the furnace and is provided at its upper end with a bleeder valve 22. A branch pipe line 23 leads from pipe 21 into bell chamber 20 and is provided with a valve 24 to control the flow of gases therethrough.

Bell chamber 20 is provided with a bleeder pipe 25 equipped with a valve 26.

Bleeder valves 13 and 22 are of the type which open against gas pressure within the bleeder pipes, as by downward movement of the long lever arms 27 against the counter-weights 28 on the short lever arms. Means are provided for opening these bleeder valves at different selected gas pressures within the bleeder pipes. This means includes the system of piping, valves and cylinders, shown in Fig. 1. A pipe line 29 leads from one uptake 12 and is divided into two branches. One branch 30 leads to a diaphragm 31 which operates a valve 32 to control the flow of fluid from a supply 33 to a cylinder 34 provided with a piston 35 attached by cable 36 to the lever arm 27 of bleeder valve 22. The other branch, 37, leads to a similar diaphragm 31a, which operates a valve 38 to control the flow of fluid under pressure from source 39 to cylinder 40 in which piston 41 is slidably mounted. Piston 41 is connected by cable 42 to the long lever arm 27 of bleeder valve 13. The controls for valve 22 are so adjusted that when the gas pressure in pipe line 29 exceeds a certain amount, for example, 13 pounds per square inch gauge, diaphragm 31 will actuate valve 32 and admit fluid under pressure from source 33 to cylinder 34 above piston 35, thereby forcing the piston downwardly and opening valve 22. Sudden moderate increases in gas pressure in the furnace caused by slips or rolls may be relieved in this way and the gas which is allowed to escape through valve 22 is clean, coming as it does from the washer and hence is not a public nuisance. When more extensive slips or rolls occur and the resulting pressure considerably exceeds that required to actuate diaphragm 31, for example, amounts to 18 pounds per square inch gauge which is sufficient to actuate diaphragm 31a, valve 13 is opened by the admission of fluid under pressure into cylinder 40 and dirty gas is vented through valve 13 provided for such emergency circumstances. In this manner only clean gas is vented during the moderate slips and rolls of the furnace and is supplemented by dirty gas only when slips or rolls of more than ordinary intensity occur.

Fig. 2 shows apparatus for automatically actuating the gas control valve in gas lines 23 and 25 in predetermined sequence with the operation of the bells of the charging apparatus. In this view the stock rod cable 43 leads from the weight 44 attached thereto inside the furnace vertically up and over a pulley 45 and then downward to a reel or other suitable means (not shown) for actuating the cable and raising and lowering the stock rod. Another cable 46 is connected to cable 43 and is wrapped around pulleys 47 and 48 keyed, respectively, to the shafts of valves 24 and 26. A counter-weight 49 is attached to the free end of cable 46. It will be understood that valves 24 and 26 are so set relative to each other that one is opened and the other is closed by movement of cable 46 in either direction.

By reason of the connection of the valve actuating cable 46 with the stock rod cable 43, the opening and closing of valves 24 and 26 is synchronized with movements of the stock rod. The movements of the stock rod cable are synchronized with movements of the large and small charging bells by means of interconnecting controls which are conventional and form no part of the present invention.

The operation of this interconnected charging apparatus is substantially as follows, starting with a furnace in operation with gas pressure above the stock line in the furnace of, for example, 5 pounds p. s. i. gauge, the valve 24 closed and valve 26 open and bells 17 and 18 closed, and the stock rod weight 44 being down at the stock line in the furnace. A quantity of furnace charge is brought into the rotating hopper whose bottom is closed by small bell 17. The small bell 17 is lowered and the charge is discharged into chamber 20 onto large bell 18. Another quantity of charge is brought into the rotating hopper, the hopper is rotated and the charge is dumped into the chamber adjacent to the first charge.

This procedure is continued until the desired amount of charging material has been accumulated on large bell 18. Thereupon the small bell 17 is closed, the stock rod cable 43 is actuated to pull weight 44 into the dome of the furnace and simultaneously cable 46 closes valve 26 and opens valve 24. Clean gas from pipe 21 enters chamber 20 and brings the gas pressure in that chamber up approximately to the pressure existing within the furnace. Thereupon, large bell 18 is lowered and the charge thereon is delivered into the stack of the furnace. Then large bell 18 is returned to closed position. Stock rod cable 43 is slacked off with resultant lowering of the stock rod weight 44 into the furnace and opening of valve 26 and closing of valve 24. The gas under pressure in chamber 20 bleeds out through pipe 25 to the atmosphere. Then the above described operation may be repeated.

It will be noted that a valve 50 is shown in conduit 51 which conducts gases away from the top of the washer 16. This valve 50 serves to control the gas pressure existing in the top part of the furnace, in the gas conduits and in the dust catcher and washer. By suitably adjusting the position of the valve, gas pressures in these parts may be regulated so that pressures higher than conventional pressures may be used, for example, pressures of 5 pounds or more p. s. i. gauge may thus be maintained in the furnace dust catcher and washer.

Although we have shown and described only one embodiment of our present invention, we contemplate others of substantially the same effect and equivalent construction, as will be understood by those skilled in the art. We have in mind, for instance, operating valves 24 and 26 independently of the stock rod in installations where such independence is desirable. In such case instead of cables 43 and 46 being connected as shown in Fig. 2, each would be free and clear of the other.

Having thus described the invention so that others skilled in the art may be able to understand and practice the same, we state that what we desire to secure by Letters Patent is defined in what is claimed.

What is claimed is:

1. The method of operating a blast furnace having a bell chamber which comprises the steps of removing from the furnace top gases carrying entrained solids and having the pressures existing in the furnace about the stock line, removing solids from substantially all of said gases, separating the thus cleaned gas into a constantly flowing stream and a stream flowing intermittently to said bell chamber, maintaining the pressures of the gases while being cleaned and in the streams of cleaned gases at approximately the pressures existing above the furnace stock line, and releasing gases from the

intermittently flowing stream to the atmosphere when the pressure above the furnace stock line and in last mentioned stream reaches a predetermined pressure above the normal furnace stock line pressure.

2. The method of operating a blast furnace having a bell chamber which comprises the steps of removing from the furnace top gases carrying entrained solids and having the pressures existing in the furnace above the stock line, removing solids from substantially all of said gases, separating the thus cleaned gas into two streams, maintaining the pressures of the gases while being cleaned and in the streams of cleaned gases at approximately the pressures existing above the furnace stock line, and periodically releasing gases from one of said streams into the bell chamber of the furnace and from the other stream into the atmosphere.

3. The method of operating a blast furnace having a bell chamber which comprises the steps of removing from the furnace top gases carrying entrained solids and having the pressures existing in the furnace above the stock line, removing solids from substantially all of said gases, separating the thus cleaned gas into two streams, maintaining the pressures of the gases while being cleaned and in the streams of cleaned gases at approximately the pressures existing above the furnace stock line, periodically releasing gases from one of said streams into the bell chamber of the furnace during charging of solids into the furnace and to the atmosphere from same stream when the pressure above the furnace stock line and in said stream reaches a predetermined pressure above the normal furnace stock line pressure.

4. In apparatus of the class described, a blast furnace having a bell chamber, a gas cleaner and a conduit from said cleaner to a gas main, a conduit connecting the top of the furnace with the cleaner to conduct top furnace gases to said cleaner, a bleeder to permit escape of top gases from the second conduit when such gases attain a predetermined high pressure above their normal pressures, a pipe communicating at one end with said cleaner and having a main outlet to the atmosphere and a branch outlet having a control valve to the bell chamber, a valve for said main outlet, and means for opening said main outlet valve, said means being responsive to a predetermined pressure of top furnace gases which is below said high pressure and above the normal top gas pressure.

5. In apparatus of the class described, a blast furnace having a bell chamber, a gas cleaner, a conduit from said cleaner to a gas main, a conduit connecting the top of the furnace with the cleaner to conduct top furnace gases to said cleaner, a bleeder to permit escape of top gases from the furnace when such gases attain a predetermined high pressure above their normal pressures, a pipe communicating at one end with said cleaner and having a main outlet to the atmosphere and a branch outlet having a control valve to the bell chamber, a valve for said main outlet, a valve for said bleeder, and means responsive to said predetermined high pressure of top furnace gases to open said bleeder valve and means responsive to a predetermined gas pressure below said high pressure and above normal top gas pressure to open said main outlet valve.

KURT G. LE VISEUR.
LEONARD LARSON.

REFERENCES CITED

The following references are of record in the file of this patent:

UNITED STATES PATENTS

Number	Name	Date
721,418	Berg	Feb. 24, 1903
759,991	Hamfeldt	May 17, 1904
1,727,100	Edwards	Sept. 3, 1929
1,856,897	Whitcomb	May 3, 1932
1,881,272	Grilli	Oct. 4, 1932
2,200,488	Clemmitt et al.	May 14, 1940
2,215,872	Fox et al.	Sept. 24, 1940
2,408,945	Mohr, Jr., et al.	Oct. 8, 1945
2,411,487	Whitcomb	Nov. 19, 1946
2,516,190	Dougherty	July 25, 1950

OTHER REFERENCES

American Institute of Mining and Metallurgical Engineers, Transactions, Iron and Steel Division, vol. 67 (1922), pages 609 and 615.

J. H. Slater: "Operation of the Iron Blast Furnace at High Pressure," Yearbook of the American Iron and Steel Institute for 1947, May 21, 1947, pages 125 to 127.