EPA-600/2-77-023r
February 1977

Environmental Protection Technology Series

INDUSTRIAL PROCESS PROFILES FOR ENVIRONMENTAL USE: Chapter 18. The Lime Industry

Industrial Environmental Research Laboratory
Office of Research and Development
U.S. Environmental Protection Agency
Cincinnati, Ohio 45268

RESEARCH REPORTING SERIES

Research reports of the Office of Research and Development, U.S. Environmental Protection Agency, have been grouped into five series. These five broad categories were established to facilitate further development and application of environmental technology. Elimination of traditional grouping was consciously planned to foster technology transfer and a maximum interface in related fields. The five series are:

1. Environmental Health Effects Research
2. Environmental Protection Technology
3. Ecological Research
4. Environmental Monitoring
5. Socioeconomic Environmental Studies

This report has been assigned to the ENVIRONMENTAL PROTECTION TECHNOLOGY series. This series describes research performed to develop and demonstrate instrumentation, equipment, and methodology to repair or prevent environmental degradation from point and non-point sources of pollution. This work provides the new or improved technology required for the control and treatment of pollution sources to meet environmental quality standards.

This document is available to the public through the National Technical Information Service, Springfield, Virginia 22161.

EPA-600/2-77-023r
February 1977

INDUSTRIAL PROCESS PROFILES FOR ENVIRONMENTAL USE

CHAPTER 18

THE LIME INDUSTRY

by

A. C. Doumas, B. P. Shepherd and P. E. Muehlberg
Dow Chemical
Freeport, Texas 77451

Terry Parsons and Glynda E. Wilkins
Radian Corporation
Austin, Texas 78766

Contract No. 68-02-1319

Project Officer
Alfred B. Craig
Metals and Inorganic Chemicals Branch
Industrial Environmental Research Laboratory
Cincinnati, Ohio 45268

INDUSTRIAL ENVIRONMENTAL RESEARCH LABORATORY
OFFICE OF RESEARCH AND DEVELOPMENT
U.S. ENVIRONMENTAL PROTECTION AGENCY
CINCINNATI, OHIO 45268

DISCLAIMER

This report has been reviewed by the Industrial Environmental Research Laboratory - Cincinnati, U.S. Environmental Protection Agency, and approved for publication. Approval does not signify that the contents necessarily reflect the views and policies of the U.S. Environmental Protection Agency, nor does mention of trade names or commercial products constitute endorsement or recommendation for use.

TABLE OF CONTENTS

CHAPTER 18

	Page
INDUSTRY DESCRIPTION	1
Raw Materials	2
Products	3
Companies	4
Environmental Impact	6
Bibliography	7
INDUSTRY ANALYSIS	8
Process No. 1. Mining/Conveying	11
Process No. 2. Crushing/Sizing	15
Process No. 3. Dredging/Washing	18
Process No. 4. Washing/Screening	21
Process No. 5. Calcination/Pulverizing	23
Process No. 6. Hydration/Packing	31
Appendix A - Raw Materials	35
Appendix B - Products	37
Appendix C - Companies and Products	39

LIST OF FIGURES

CHAPTER 18

Figure		Page
1	Lime Industry Product Tree.	9
2	Lime Industry Flowsheet	10

LIST OF TABLES

CHAPTER 18

Table		Page
1	Representative Chemical Analyses of Different Types of U.S. Limestone	12
2	Typical Emissions from Crushing/Sizing	16
3	Composition of Rough-Washed Oyster Shells	18
4	Composition of Clean, Washed Oyster Shells	21
5	Composition of Commercial Quicklimes	26
6	Composition of Kiln Exhaust Gases	26
7	Volumes of Kiln Gas Generated in Calcining	27
8	Typical Fugitive Lime Emissions and Control Methods	28
9	Composition of Particulates from Natural Gas-Fired Kilns	28
10	Particle Size of Particulates from Natural Gas-Fired Kilns	29
11	Typical Product Analyses of Commercial Hydrated Limes	31
12	Emissions and Control Methods for Hydration/Packing	32
A-1	Typical Compositions of Raw Materials	36
B-1	List of Products	38
C-1	Companies and Products of the Lime Industry	40

ACKNOWLEDGEMENTS

This catalog entry was prepared for EPA by Dow Chemical U.S.A., Texas Division, under Contract 68-02-1329, Task 8. The contributions of A. C. Doumas, B. P. Shepherd, and P. E. Muehlberg are gratefully acknowledged.

Helpful review comments from Gilbert C. Robinson were received and incorporated into this chapter.

LIME INDUSTRY

INDUSTRY DESCRIPTION

In the United States, production of lime and limestone are considered two separate and distinct industries. This is exemplified by the fact that nearly 95% of all limestone, exclusive of stone for cement, is produced by companies that do not make lime. The lime industry comprises operations which mine dolomite or limestone deposits or dredge oyster shells and process these carbonate materials into lump, crushed, or pulverized calcined products. The chief products in this category are quicklime, slaked or hydrated lime, dolime, and hydrated dolime. Approximately 90% of all lime produced and sold is used in chemical and industrial applications. Lime's emergence as a chemical has occurred largely since 1930. Most of the lime produced is high-calcium lime derived from limestone. Even though only about 5% of the limestone mined in the United States is used to produce lime, the amount produced is immense. Next to sulfuric acid, lime is the second-largest chemical product in tonnage made in pure form. The United States ranks second in world lime production, producing about 18% of the total.

Lime production operations are comparatively simple, as shown by the flow diagram in Figure 2 (page 18-16). Depending upon whether shell or stone is used as the raw material, almost all of the operations are similar, employing basically the same processes in fundamentally the same sequence. A small percentage of lime is manufactured from oyster shells, particularly along the Gulf Coast. Mining of limestone rock or dolomite is by open-pit (quarrying) methods and by underground mining techniques. Less than 8% of the limestone produced is mined underground. Calcining is performed either in stationary vertical kilns of various designs or in horizontal rotary kilns. Other major operations involve size reduction, washing, and size separations. Most of the equipment is standardized in the industry.

The industry included 172 producing plants in 1974 involving mining and rock or shell handling facilities plus calcining and hydrating or milling operations. These tend to be located near manufacturing and industrial centers. One additional plant was located in Puerto Rico. No two lime production facilities are alike. Each plant is individualized and tailored to the particular limestone deposit, the lime products desired, and the type of fuel available in each locale.

Total lime output in 1974 was 19.6 million metric tons. It was produced in 42 states and used by all 50 states.

Plants range in size from those producing less than 10,000 metric tons per year to giant facilities capable of output in excess of 350,000 metric tons per year. Using 1973 statistics, at least 67% of all lime sold or used by producers in the United States was manufactured in plant facilities each capable of producing more than 180,000 metric tons per year. This involved only 39 plants out of a total of 176.

Employment in this industry was approximately 7,300 in 1973, including mines and plants. This is a reduction of approximately 2,000 people since 1949.

Because of the low unit value (approximately $4.25 per metric ton) of crushed limestone, shell, and other sources of lime, transportation is an important factor in the economics of the industry. Long distance shipments are usually impractical. Most shipments are made by truck with some by rail or barge. The maximum distances that a producer can ship economically varies considerably, 480-645 kilometers is considered average.

The total number of plants has slowly dropped in recent years, while total production and sales have trended upward slightly. This is due to the shutting down of smaller, older and inefficient plants. For instance, between 1972 and 1973 the number of lime plants decreased from 186 to 176, yet the average output per plant increased from 99,135 metric tons per year to 108,930.

Statistics for 1974 show that the leading lime-producing states were Ohio, California, Texas, Colorado, and Pennsylvania. These five states accounted for 38% of the total number of plants. In 1973, the states of Ohio, Texas, Missouri, Michigan, and Pennsylvania accounted for 54% of the country's total lime output.

A study made in 1973 showed that the lime industry used primarily coal and natural gas for most of its energy requirements. Only 2% of the total energy was purchased electricity. Approximately 46% of the total energy was supplied with coal, and natural gas provided 45% of the requirements. Most of the energy is used as heat in the calciners. Lime manufacture is a highly fuel-intensive industry, requiring on the average 2.0 million kcal per metric ton of product made. Next to the cost of the stone used to feed the kilns, fuel costs are the most critical factor in lime production costs.

Raw Materials

Bedded deposits of limestone and dolomite rock used in manufacturing lime are generally obtained from open pit quarries and underground mines by conventional methods. Limestone is a sedimentary rock composed of calcium carbonate ($CaCO_3$). Dolomite or dolomitic limestone contains magnesium as well as calcium. Although limestone deposits are found in every state in the United States, only a small portion is pure enough for industrial lime manufacture. In general, quarries are selected to furnish rock containing low percentages of alumina, silica, clay, or iron oxide. Lime manufacture requires stone of definite size ranges depending on the type of kiln used.

A small percentage (approximately 8%) of lime is manufactured from sea shells. Oyster and clam shells are the remains of marine animals, consisting mostly of calcium carbonate. These shells are concentrated in reefs along certain coastal areas, particularly along the Gulf Coast. Shell is usually recovered by conventional dredging and washing operations.

More than 90% of the limestone mined is from open-pit operations with the remainder from underground mines. Most lime producers own their source of limestone and have ample reserves of ore.

To be classed as limestone, the rock must contain at least 50% calcium carbonate. It is called high-calcium limestone when the rock contains less than 5% magnesium carbonate. When the raw material contains 30 to 45% magnesium carbonate, it is referred to as dolomite or dolomitic limestone.

Two general types of adverse environmental impact occur in producing limestone:

- Fugitive atmospheric emissions of particulates (dusting) in open-pit mining and handling operations.
- Creation of mounds of stripped overburden, and cratering of landscapes in open-pit and underground mining operations.

A list of the raw materials used in this industry is included in Appendix A. All the raw materials are considered non-toxic.

Products

Approximately one-third of the total tonnage of lime products manufactured is used captively by the various producers. By far the largest portion of this production is quicklime. Of the industry total for 1974, 17.3 million metric tons of quicklime was produced. Only 2.3 million tons of hydrated lime was produced.

In terms of broad end-use applications, all types of lime products (1973) were distributed as follows:

	Million Metric Tons Used
Agriculture	0.127
Construction	1.461
Chemical and Industrial	16.445
Refractory	1.134
TOTAL	19.167

Chemical and industrial uses constitute approximately 90% of the consumption of all lime products sold or used. Representative of these end-use applications are:

Basic oxygen furnace steel
Various alkalies
Water purification
Pulp and paper
Sugar refining
Open-hearth steel
Electric steel
Copper ore concentration
Sewage treatment
Aluminum and bauxite
Glass
Calcium carbide
Petrochemicals
Acid mine water neutralization
Precipitated calcium carbonate
Miscellaneous metallurgy
Magnesium metal production
Petroleum refining
Chrome products
Plastics
Food processing
Tanning operations
Miscellaneous ore concentration
Insecticides
Oil well drilling
Fertilizer manufacture
Rubber manufacture
Wire drawing
Silica brick

A complete list of the products made by the lime industry is presented in Appendix B.

Companies

Lime products are manufactured both by companies that employ the materials in captive uses and by merchant producers that sell their products commercially to others. Traditionally, the companies comprising this industry have been intensely competitive.

In terms of production the leading individual plants for 1974 were:

Ste Genevieve plant of Mississippi Lime Co. in
Ste Genevieve County, Missouri

Buffington plant of Marblehead Lime Co. in
Lake County, Missouri

Syracuse plant of Allied Chemical Corp. in
Onondaga County, New York

Lorain plant of U.S. Steel Corp. in
Lorain County, Ohio

Painesville plant of Diamond Shamrock Corp. in
Lake County, Ohio

Annville plant of Bethlehem Steel Corp. in
Lebanon County, Pennsylvania

Wyandotte plant of BASF Wyandotte Corp. in
Wayne County, Michigan

Woodville plant of Martin-Marietta Corp. in
Sandusky County, Ohio

Thorton plant of Marblehead Lime Co. in
Cook County, Illinois

Grand River plant of Republic Steel Corp. in
Lake County, Ohio

These 10 plants accounted for 29% of the total lime produced in 1974.

Leading companies in terms of production according to 1973 figures were:

Marblehead Lime Company

Mississippi Lime Company

Allied Chemical Corporation

Bethlehem Steel Corporation

Martin-Marietta Corporation

Pfizer, Incorporated

Warner Company

United States Gypsum Company

Diamond Shamrock Corporation

United States Steel Corporation

These ten companies operated 28 plants and accounted for 42% of the total lime produced.

A complete list of the companies in the lime industry is presented in Appendix C.

Environmental Impact

Fugitive emissions of particulate limestone from mining, handling, crushing, and screening operations are common in the industry. Also other fugitive emissions of particulate quicklime and hydrated lime result from kiln discharges, hydrator operations, milling, handling, packing, and shipping operations. These particulates are generally considered more a nuisance than a health hazard. Silicosis and respiratory illness have not been problems with employees in lime plants. Lime products, being alkaline, can cause irritation to eyes, the respiratory system, and moist skin. A wide variety of dust control equipment is available for employment in the various processing steps. Where such devices have been used, serious health and emission problems have been minimized. However, some of the devices utilize wet recovery techniques, i.e., water scrubbers etc., which generate alkaline waste liquors difficult to dispose of.

The dredging of sea shells results in potential ecological problems due to the upsetting of marine life in or near shell reefs.

Bibliography

Boyton, R. S. Chemistry and Technology of Lime and Limestone. New York, John Wiley and Sons, Inc., 1966. 520 p.

Cotter, P. G. Lime and Calcium. In: Mineral Facts and Problems. U. S. Dept. of the Interior, 1965. 9 p.

Lewis, C. J., and B. B. Crocker. The Lime Industry's Problem of Airborne Dust. Journal of Air Polution Control. 9:31-39. January 1969.

Lime and Limestone. In: Kirk-Othmer Encyclopedia of Chemical Technology, Standen, A. (ed.). New York, John Wiley and Sons, Inc., 1967. 12:414-460.

Minerals Yearbook, 1971, Schreck, A. E. (ed.). Washington, U.S. Dept. of the Interior, Vol. II, 1973. 811 p.

Reed, A. H. Lime. In: Minerals Yearbook preprint, 1973, Schreck, A. E. (ed.). Washington, U.S. Dept. of the Interior, 1973. 10 p.

Reed, A. H. Lime, Monthly. In: Mineral Industry Surveys. Washington, U.S. Dept. of the Interior, February 19, 1975. 4 p.

Reed, A. H. Lime, Monthly. In: Mineral Industry Surveys. Washington, U.S. Dept. of the Interior, April 28, 1975. 12 p.

Shreve, R. N. Portland Cements, Calcium, and Magnesium Compounds. In: Chemical Process Industries. New York, McGraw-Hill Book Company, Inc., 1967. p. 174-180.

INDUSTRY ANALYSIS

Manufacture and use of quicklime and hydrated lime is almost as old as recorded history. Quicklime was produced locally in the United States as early as 1635 in Rhode Island. However, it was not until 1733 that lime manufacturing became established as a significant industry in commerce. The commercial hydration of lime is a comparatively recent development, initiated in 1904. Technical progress has rapidly advanced the entire industry during the last 70 years. The current technology as found in the technical literature is in general, widespread use by all of the companies representing this industry. The data obtained from the various sources listed in the bibliographies of the Process Descriptions are generally valid for all installations.

Data on emissions has, in most cases, been sufficient to reasonably define the physical characteristics and quantities of such wastes.

Published technological data for the lime industry are shown diagrammatically in the flowsheet of Figure 2.

The interior of each of the rectangular "process blocks" appearing on the flowsheet represents at least one, and usually several, of the sequential, real processes of the prototype operations depicted in the flowsheet. In the process descriptions presented, the word "process" refers to what occurs inside the process block.

A number has been assigned to each of the process blocks, uniquely identifying the process with an appropriate title and with a process description. Flag symbols at the upper right-hand corner of the process block are used to indicate the nature of the waste streams, if any, discharged from the process - a circle for atmospheric emissions, a triangle for liquid wastes, and a rhombus for solid wastes. The flags do not differentiate between inadvertent (fugitive) and designed wastes.

A verbal process description has been written to characterize each process further, to relate it to other processes, and to quantify its operating parameters. These process descriptions immediately follow the flowsheet. More emphasis has been put on the processing of high-calcium limestone from above-ground quarries, rather than from underground mines. For this reason, most of the data and information reported is in the context of lime manufacture from high-calcium limestones obtained from open-pit quarries. However, the techniques and equipment employed also apply to dolomitic limestones obtained from both types of mining. Similarly, the production of lime from oyster shell is shown in the process flow diagram for the sake of completeness, even though use of this source of lime is declining.

As a qualitative overview of the material flow of the entire industry, a chemical tree, Figure 1, has been included with the introductory section for the Lime Industry Processes. This diagram shows the myriad of end-uses for a comparatively small number of lime products, originating from only one or two basic raw materials.

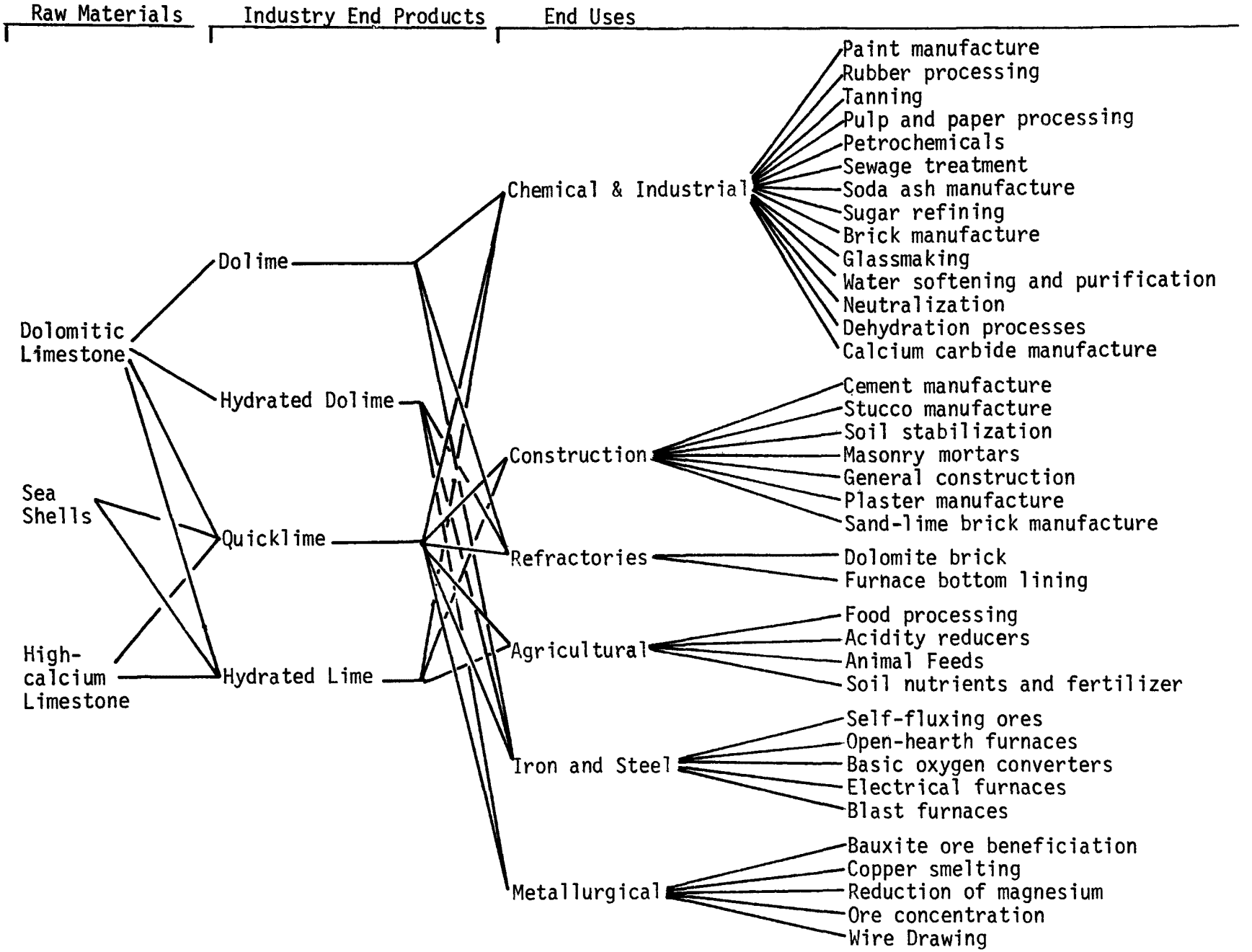

FIGURE 1. LIME INDUSTRY PRODUCT TREE

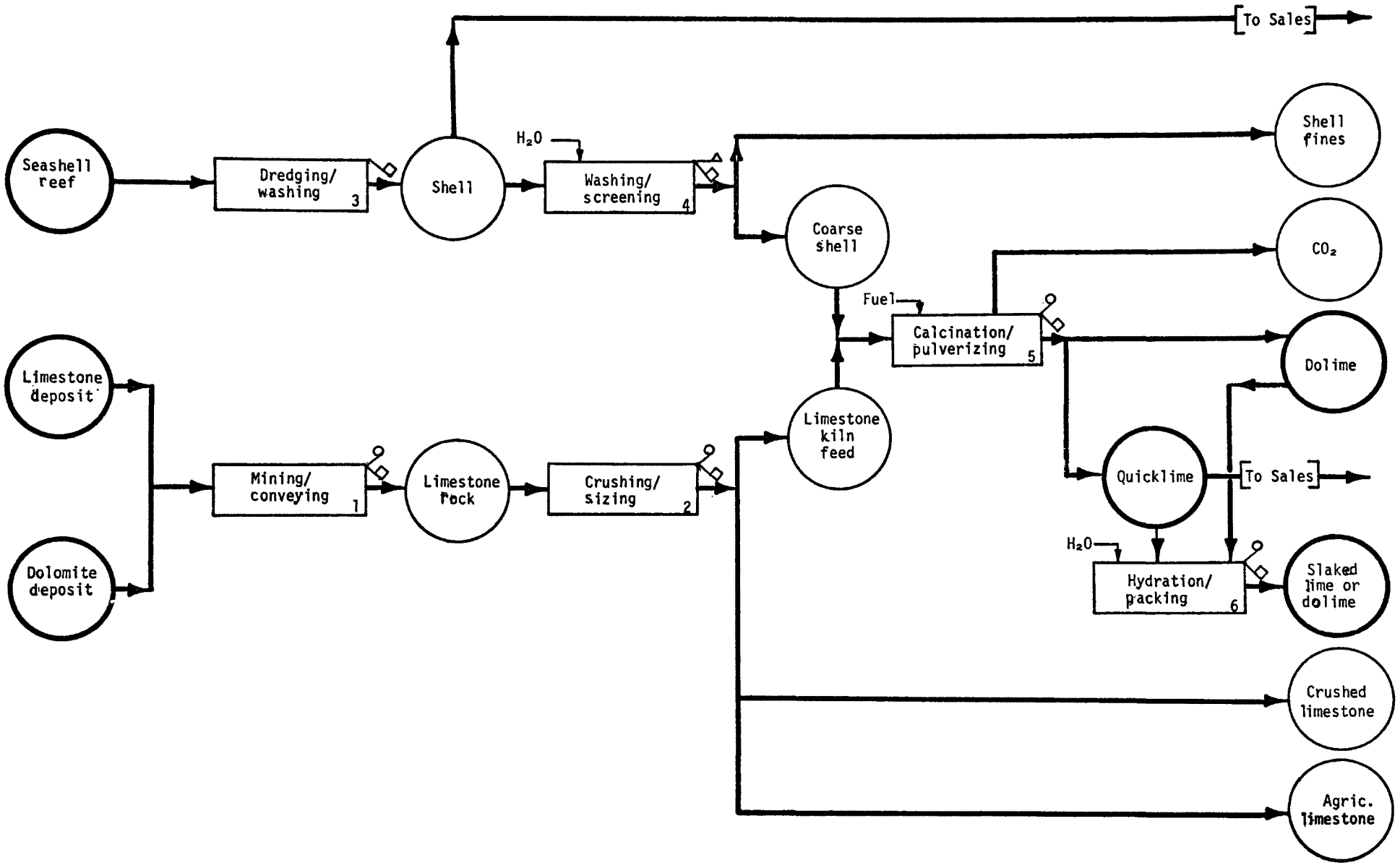

FIGURE 2. LIME INDUSTRY FLOWSHEET

Mining/Conveying

1. Function - This process is the beginning step in the manufacture of lime. The object is to remove rock from the bedded deposit of limestone in the form of broken stone and transfer the material to the Crushing/Sizing Process (No. 2). The typical operations involve the drilling of holes for loading of explosives, blasting the limestone loose, loading the stone into cars or trucks, and the conveying of the stone to a primary crusher. In most cases, the primary crusher will be located at the quarry or mine. Underground mining is costlier than open-pit mining, but does not involve the extensive stripping of overburden as required in open-pit mines.

   Loading of stone is done with power shovels almost exclusively. Generally, the size of the shovel is coordinated with the size of the primary crusher. Diesel, gasoline and electric shovels are employed, but the electric shovel is usually favored for sizes 2.3 cubic meters or larger. The stone is loaded onto inclined rail-type cars for transport from the quarry proper to the primary crusher. Rugged rubber-wheeled off-highway trucks are very commonly employed.

   Description of the crushing steps will be described in the Crushing/Sizing Process Description (Process 2).

2. Input Materials - Quantities based on one metric ton of quicklime produced:

   - Broken high-calcium limestone rock, 1.79 tons (theoretical). This quantity is never achieved because of handling and dust losses, plus rejection due to over- or under-sized material.

   - Table I shows the chemical analyses of various types of limestones found in the United States.

   - Broken dolomitic limestone rock, 1.90 tons (theoretical).

   - Practically speaking, at least 2 tons of stone is needed for one ton of lime produced, since there is an attrition loss of material as solid particulates during the Mining and Crushing/Sizing Processes.

3. Operating Parameters

   Roughly 9 metric tons of stone can be blasted loose per kilogram of explosive used. Typical range of operation is 4 to 12 tons per kilogram.

Table 1. REPRESENTATIVE CHEMICAL ANALYSES OF DIFFERENT TYPES OF U.S. LIMESTONE

Component	Limestone, %[a]							
	1	2	3	4	5	6	7	8
CaO	54.54	38.90	41.84	31.20	29.45	45.65	55.28	52.48
MgO	0.59	2.72	1.94	20.45	21.12	7.07	0.46	0.59
CO_2	42.90	33.10	32.94	47.87	46.15	43.60	43.73	41.85
SiO_2	0.70	19.82	13.44	0.11	0.14	2.55	0.42	2.38
Al_2O_3	0.68	5.40	4.55	0.30	0.04	0.23	0.13	0.57
Fe_2O_3[b]	0.08	1.60	0.56	0.19	0.10	0.20	0.05	0.56
SO_3[c]	0.31		0.33			0.33	0.01	
P_2O_5			0.22		0.05	0.04		
Na_2O	0.16		0.31	0.06	0.01	0.01		
K_2O			0.72		0.01	0.03		
H_2O			1.55		0.16	0.23		n.d.
Other			0.29		0.01	0.06	0.08	0.20

[a] 1 = Indiana high-calcium stone
2 = Lehigh Valley, Pa., "cement rock"
3 = Pennsylvania "cement rock"
4 = Illinois Niagran dolomitic stone
5 = Northwestern Ohio Niagran dolomitic stone
6 = New York magnesian stone
7 = Virginia high-calcium stone
8 = Kansas Cretaceous high-calcium stone (chalk)

[b] Includes some Fe as FeO

[c] Includes some elemental S.

- Primary blasts can release anywhere from 27,000 to 227,000 metric tons of stone per blast.

- Shovel size varies from 0.4 to 3.8 cubic meters.

- Capacity of hauling trucks: up to about 55 metric tons payload, although the average is 22 to 27 tons.

4. Utilities

- Total energy requirement in all forms:

  Underground mining: 1-20 kWh/metric ton (estimated) of stone.
  Open-pit quarry: 2-20 kWh/metric ton (estimated) of stone.

- Fuel oil: approximately 4.5-6.5 kWh/metric ton of material mined or quarried (estimated).

5. Waste Streams

- Fugitive emissions of particulate limestone from blasting, handling, crushing, and hauling of stone. These emissions have the same composition as the original stone. Emissions due to blasting explosives are intermittent.

- Solid wastes in the form of mounds of stripped overburden incident to preparation of open-pit quarries for removal of stone.

- Dust suppression is achieved by water sprays on rock and wetting of roads with calcium chloride solution and road oil.

- Emissions (typical):

  Bulk loading: 0.02 grams/cubic meter of air, concentration.
  Crushed stone stockpile: 0.004 grams/cubic meter of air, concentration.

6. EPA Source Classification Code

3-05-020-06 Screen/Convey/Handling
3-05-020-07 Open Storage
3-05-020-09 Blasting-general

7. References

Boynton, R. S. Chemistry and Technology of Lime and Limestone. New York, John Wiley and Sons, Inc., 1966. 520 p.

Lewis, C. J., and B. B. Crocker. The Lime Industry's Problem of Airborne Dust. Journal of Air Pollution Control, January 1969. 9:31-39.

Herod, D. C. Woodville Lime Takes Aim at Premium Market. Pit and Quarry, 1975. 67(5):90-93.

Krohn, B. J. U.S. Lime Division's Dust Abatement Efforts. Pit and Quarry, 1974. 66(5):87-92.

Lime and Limestone. In: Kirk-Othmer Encyclopedia of Chemical Technology, Standen, A. (ed.). New York, John Wiley and Sons, Inc., 1967. 12:414-460.

Stowell, F. P. Limestone as a Raw Material in Industry. New York Oxford University Press, 1963. p. 9.

Truffner, W. E. Allied Product Company's Expanded Montevallo Plant. Pit and Quarry, 1975. 67(5):98-103.

Crushing/Sizing

1. Function - This processing step involves the crushing, pulverizing or grinding, and sizing of the raw quarry or mine feedstock from Mining/Conveying, Process 1. Lime manufacture requires stone of definite size ranges depending on the type of kiln used. The greatest influence on lime quality is the size gradation of limestone used to feed the kilns. Narrow gradations such as 10 x 20 cm, 2.5 x 5 cm, 0.5 x 1 cm, or narrower are very conducive to uniform calcination. Preparation of crushed stone requires a series of crushing, screening, and classification operations. Primary crushers employed may be either the jaw or gyratory type. Reduction in the primary crusher is generally not greater than 6 to 1. Depending on rock hardness, roll crushers and hammer mills may also be used. In most cases, the primary crusher will be located at the quarry or mine.

   Secondary crushing of stone to sizes 2.5 cm and under is achieved in cone crushers and high speed, flat-angle gyratory crushers. Sometimes hammer mills are employed on the lesser abrasive stone varieties. Depending upon current lime demand, some of the crushed limestone may be sold as by-product incidental to the main calcining process. Some pulverizing is done to further reduce undersize stone that is generally unsuitable for feed to the kilns. The material from this operation is sold as by-product agricultural limestone. Occasionally the stone may be dried in a rotary drier to facilitate better pulverizing.

   Vibrating screens of various types are the most prevalent method of classifying all sizes of limestone. The type and size of machine and the frequency of vibration is determined by the size gradation of the stone to be screened. Many lime plants are able to reduce the impurities in their lime product by careful screening and selecting the stone for burning. It should be noted that the percentage of impurities in a quicklime is nearly double that in the original stone.

   Provisions are usually made in every plant layout to store very large quantities of processed or semi-processed stone. This is to allow for balancing the fluctuating demand for lime products against the production and availability of raw material. Crushed stone is kept in huge stockpiles or surge piles. Material is conveyed to these piles by conveyor belt. A tunnel conveyor under the pile allows withdrawal for further processing in all types of weather. The most prevalent stone-conveying equipment is the rubber belt conveyor in conjunction with bucket elevators.

2. Input Materials

   Broken stone from Mining/Conveying, Process 1, 2.0 metric tons, approximately, of stone per ton of quicklime produced.

3. Operating Parameters

- Primary crushers will reduce stone to lumps 2.5 to 7.6 centimeters in size and are sized to handle broken stone in sizes measuring up to 60 to 90 centimeters.

- Secondary crushers are used to reduce stone to sizes below 2.5 centimeters; capacities up to 3,000 metric tons per hour.

- Most vertical kilns require limestone feed in sizes of 15 to 20 centimeters to minimize pressure drop in the unit.

- Rotary kilns require a more carefully classified and smaller size limestone feed, generally ranging from about 0.5 to 1.25 centimeters, although multi-kiln operations may employ one unit using feed in the 2.5 to 6.0 centimeter range.

- Both jaw crushers and gyratory crushers have openings approximately 2 x 2.5 meters. A gyratory crusher has between 3 and 4 times the capacity as a jaw crusher, but also uses about two times the energy requirement; capacities up to 3,000 metric tons per hour.

- By-product limestone used for agricultural applications is usually pulverized to 60 to 100%, -200 mesh.

4. Utilities

Total power consumption is estimated at 10 to 200 kWh/metric ton of material processed, depending upon the crushing/grinding and classification steps required.

5. Waste Streams

- Fugitive emissions of solid particulate limestone from crushed and pulverized limestone operations and screening; approximately 12 grams per kilogram or rock produced without controls in primary crushing operations and 1.0 gram per kilogram in secondary crushing and screening.

- Emissions from this process are summarized in Table 2.

Table 2. TYPICAL EMISSIONS FROM CRUSHING/SIZING

Source or Operation	Particulate Emissions, gms/cu meter	Collection Efficiency, %	Method of Control
Limestone Primary Crushing	0.04	poor	water sprays
Limestone Secondary Crushing	0.12	good	cyclone & bag filters
Limestone Screening	0.38		none
Pulverized Limestone Drier	4.67	60-70	cyclone collector

•Solid or wet limestone particulates removed from various air emission abatement devices used. Because of the heterogeneous nature of the materials collected, profitable disposal is difficult. Materials are usually held at the plant site and eventually used as landfill.

6. EPA Source Classification Code

3-05-020-01	Primary Crushing
3-05-020-02	Secondary Scushing/Screening
3-05-020-03	Tertiary Crushing/Screening
3-05-020-05	Fines Mill
3-05-020-06	Screening/Conveying/Handling
3-05-020-07	Open Storage

7. References

Boynton, R. S. Chemistry and Technology of Lime and Limestone. New York, John Wiley and Sons, Inc., 1966. 520 p.

Herod, D. C. Woodville Lime Takes Aim at Premium Market. Pit and Quarry, 1975. 67(5):90-93

Krohn, B. J. U.S. Lime Division's Dust Abatement Efforts. Pit and Quarry, 1974. 66(5):87-92.

Lewis, C. H., and B. B. Crocker. The Lime Industry's Problem of Airborne Dust. Journal of Air Pollution Control, January 1969. 9:31-39.

Lime and Limestone. In: Kirk-Othmer Encyclopedia of Chemical Technology, Standen, A. (ed.). New York, John Wiley and Sons, Inc., 1967. 12:414-460.

Shreve, R. N. Portland Cements, Calcium, and Magnesium Compounds. In: Chemical Process Industries. New York, McGraw-Hill Book Company, Ind., 1967. p. 174-180.

Truffner, W. E. Allied Product Company's Expanded Montevallo Plant. Pit and Quarry, 1975. 67(5):98-103.

Dredging/Washing

1. Function - This process involves the use of sea-going suction dredges to "mine" oyster or clam shells found in beds or reefs located along sea coasts, particularly the Texas-Louisiana Gulf Coast, where no limestone deposits of any consequence are to be found within 200 miles of the coast. Sea shell beds may be classed as unconsolidated limestone deposits. In practice, large suction pipes on the dredge, equipped with rotary cutting heads revolving at 9 to 15 rpm, are dropped onto the reef. Large pumps pick up the dislodged shell and transport it to the top of the dredge for rough washing.

   The dredged up shells are rough-washed on board with fresh high pressure seawater to dislodge silica, silt and mud. The washing step is facilitated using single- or two-stage screens or trommels. High pressure seawater is directed at the raw shells using fish-tail spray nozzles.

   The rough washed shells are transported by a boom conveyor and stacked on barges alongside the dredge. Barges are moved by tugboat to the offloading dock some 50 to 100 kilometers distant. At the dock, shell is offloaded using derrick clamshell buckets and dumped onto surge or stockpiles.

   Most shell-lime producers purchase their shell under contract from professional shell dredgers. Some rough-washed shell is sold for secondary road construction uses. Further expansion of lime proudction from shells appears quite limited, since the supply of shell is being depleted at a rapid rate due to extensive withdrawal from the reefs in the past 30 years.

2. Input Materials

   •Raw shell: between 1.1 and 1.2 metric tons per ton of rough-washed shell produced.

   Typical ranges of analysis of rough-washed oyster shells are presented in Table 3.

Table 3. COMPOSITION OF ROUGH-WASHED OYSTER SHELLS

Component	Wt. %
$CaCO_3$	91.9 - 95.0
$MgCO_3$	0.89 - 1.44
SiO_2	2.2 - 4.5
SO_4 (as $CaSO_4$)	0.43 - 0.51
Al_2O_3	0.11 - 0.28
Fe_2O_3	0.17 - 0.27

3. Operating Parameters

- A typical dredge is about 92 meters long, not including a 20-meter boom, and has a beam about 12 meters long. When empty, the unit will draw about one meter of water and two meters when loaded.

- Shell reefs run in thickness between 0.6 and 12 meters. 0.6 meter is the minimum economic thickness.

- One dredge can provide, on the average, between 133,000 and 172,000 cubic meters of washed, unsized shell per month.

- Raw shell density (drained): between 925 and 945 kilogram per cubic meter.

- Typical dredge pump specifications:

  casing diameter, 1.8 meters
  suction x discharge size, 40 x 46 centimeters
  speed, 345 rpm

4. Utilities

- Approximately 227 cubic meters per hour of seawater, continuous, for rough shell washing on a dredge, typical.

- 820 kilowatt diesel engine to power the dredge pump and cutter head.

- Approximately 1600 kW with diesel engine-driven electric generators (usually two) for lights, seawater pumps, conveyors, and accessories.

5. Waste Streams

The only waste stream from the Dredging/Washing process consists of the seawater washings mixed with sand, mud, and silt or gumbo washed off the raw shells as they are dredged up. These washings are returned to the sea. No quantitative figures are available, but it has been estimated that 10 to 20% of the solids dredged from the shell reef is returned to the sea as waste.

6. EPA Source Classification Code

None

7. References

Boynton, R. S. Chemistry and Technology of Lime and Limestone. New York, John Wiley and Sons, Inc., 1966. 520 p.

Lime and Limestone. In: Kirk-Othmer Encyclopedia of Chemical Technology, Standen, A. (ed.). New York, John Wiley and Sons, Inc., 1967. 12:414-460.

Taggart, A. F. Industrial Minerals. In: Handbook of Mineral Dressing. New York, John Wiley and Sons, Inc., 1966. 3:46-60.

Washing/Screening

1. Function - In this process, sea shells are unloaded from barges and given a fresh water wash to remove residual seawater and salts. For high purity commercial chemical lime, shell washing is mandatory. In some cases, the shell user must "scrub" the incoming material in order to remove encrustations of silica that would otherwise lower overall purity of the final lime product.

   Washing is done using rotary screens or trommels. These may be either single- or two-stage washer screens. Prior to feeding into the kilns, the shells go through a second screening process to separate out the fines. These fines are generated as a result of mechanical breakage while handling. Some of the washed and sized shell fines are sold for chicken grits and as agricultural limestone by-products.

   Finally, the washed and screened coarse shells are transported and dumped onto surge piles to await conveying to the rotary kilns. Loading and feeding is usually done with a combination of stocking conveyors, stockpile loaders, and inclined belt conveyors.

2. Input Materials

   •Rough-washed shells, between 1.1 and 1.2 metric tons per ton of clean, washed shell.

   •A typical analysis of clean, washed oyster shells is given in Table 4.

Table 4. COMPOSITION OF CLEAN, WASHED OYSTER SHELLS

Component	Wt. %
$CaCO_3$	98.2
$MgCO_3$	1.21
SiO_2	0.05
SO_4 (as $CaSO_4$)	0.35
Al_2O_3	0.01
Fe_2O_3	0.02

3. Operating Parameters

   •Typical revolving screen washer: 0.9 x 8.5 meters revolving screen, approximately 7 to 20 rpm, 30 mm opening.

   •Capacity can be as high as 100 metric tons per hour.

   •Occasionally two-stage wash trommels are employed using $2\frac{1}{2}$ -mesh and 8-mesh screen; 0.9 x 5.5-meter and 1.5 x 5-meter sizes.

   •Water spray pressure: 1.75 to 5.0 kilogram per cm^2 with nozzles separated 15 to 20 cm apart.

4. Utilities

•6 to 10 cubic meters high-pressure fresh water per metric ton of rough-washed shell feed to the process.

•Estimated total power: up to 1.5 kWh per metric ton of washed shell.

5. Waste Streams

Shell washings: These consist mainly of fresh water with dissolved residual salt, plus minor quantities or mud and silica not previously removed by the seawater washing step in Process 3.

6. EPA Source Classification Code

None

7. References

Boynton, R. S. Chemistry and Technology of Lime and Limestone. New York, John Wiley and Sons, Inc., 1966. 520 p.

Lime and Limestone. In: Kirk-Othmer Encyclopedia of Chemical Technology, Standen, A. (ed.). New York, John Wiley and Sons, Inc., 1967. 12:414-460.

Taggart, A. F. Screen Sizing. In: Handbook of Mineral Dressing. New York, John Wiley and Sons, Inc., 1966. 7:27-34.

Taggart, A. F. Industrial Minerals. In: Handbook of Mineral Dressing. New York, John Wiley and Sons, Inc., 1966. 3:46-60.

Calcination/Pulverizing

1. Function - Crushed limestone rock or sized shell from process steps 2 or 4 is heated to a high temperature to convert the carbonate to oxide. Carbon dioxide is driven off as a by-product and may or may not be recovered for other uses. In the early stages of calcination, moisture and volatile organic matter are driven off. As the temperature of the limestone (or shell) rises, decomposition begins, releasing carbon dioxide. Rapid decomposition does not take place until a temperature of 700° to 800°C is reached for dolomitic limestone and 830° to 930°C for high-calcium raw materials.

   A number of types of kilns are used for carrying out calcination. The two most widely used are the rotary kiln and the vertical kiln. Both types are made up of steel shells lined with refractory brick. The oldest and most numerous type of continuous kiln is the vertical or shaft kiln. These are the most efficient in terms of fuel economy, but are limited in capacity per individual unit. An inclined skip-hoist conveys feed to the top where it is charged in batches. The kiln is usually fired with gas or ore burners in the side. Older kilns use coal as fuel. Calcined lime is taken out at the bottom continuously or in batches. Flue gas exhausts at the top of the kiln. Vertical kilns generally yield a lump lime product.

   Horizontal rotary kilns are used to produce slightly more than 80% of total lime production in the United States. About 50% of all the captive lime produced is calcined in rotary kilns. Even though fuel economy is lower and the capital investment is greater for rotary kilns, the trend is toward these types because of their high capacity per unit. Consequently the manpower requirement per ton of product made is much lower than for vertical kilns. Rotary kilns are generally fired with natural gas, fuel oil, or pulverized coal. The flow of limestone (or shell) and combustion products is countercurrent through the kiln.

   In recent years, several new types of kilns have been developed with goals of improving capacity, fuel economy, temperature control, and capital costs. Of increasing interest is the development of techniques which will reduce attrition and solid particulate emissions. Some of the more noteable of these developments are the Dorrco Fluosolids kiln and the Calcimatic kiln.

   Regardless of the type of kiln employed, after being discharged, the quicklime is conveyed by belt conveyor to screens where the fines and undersized particles are removed.

   Most quicklime is shipped in bulk, with covered hopper-bottom rail cars being the preferred method. Less than 1% is packed in bags. The product

is available in various mesh sizes, varying all the way from fine pulverized grades to lumps. In general, lumps from vertical kilns will range from 6 to 25 cm. Pebble lime usually comes from rotary kilns in the 0.5 to 7.0 cm range, with the high end obtained sometimes from crushed lumps from the vertical kilns. Air-swept hammer mills are commonly used for grinding, although impact breakers, small gyratory crushers, and cone mills are also used. Screening steps similar to those in the Crushing/Sizing process (No. 2) are also applied to some lime milling operations.

If hydrated lime is to be made, grinding equipment is employed to pulverize and reduce the lump or pebble quicklime to 0.5 to 1.24 cm or smaller. Also, waste quicklime fines that are screened off at the kiln discharge are also normally used as feed to the hydration process.

Dead-burned dolomite (refractory grain) is the commercial name for refractory lime. This product, with few exceptions, is made in rotary kilns. It is a highly sintered form of dolomitic lime that has been calcined at temperatures up to 1635° to 1820°C. Usually 5 to 8% of iron oxide is added. The MgO component is converted to periclase and the entire product is rendered chemically less reactive than materials calcined at lower temperatures. The product is grayish-brown in color and is available in various granular sizes from about 1 cm to -20 mesh. Primary use of this material is for lining basic open-hearth steel furnaces. Before shipment of this product, a light spray of asphaltic based oil is added to enhance stability of the product and reduce dusting.

2. Input Materials

Quantities are based on one metric ton of quicklime produced, unless otherwise specified:

- Crushed, dried, and graded limestone or sea shells from processes 2 or 4:

  1.79 tons (theoretical)

- Only 1.35 tons (theoretical) of raw material are required to produce one ton of dry hydrated lime. This is because of the water added to quicklime in process step 6.

- Coal: approximately 0.3 tons (as fuel), or equivalent amounts of natural gas or fuel oil, based on heating value.

- Practically speaking, about 2 metric tons of stone or shell are required per ton of quicklime produced because of kiln losses and fines generated in the raw material preparation and product screening and pulverizing steps.

3. Operating Parameters

a. Vertical Kilns

- 3 to 7 meters diameter by 10 to 23 meters high.

- Capacity: 6 to 14 metric tons per day (older units), trend is toward 68 to 73 tons per day.

- Heat requirements: about 0.78 million kcal per metric ton of lime produced. Generally more efficient than rotaries.

- Kiln temperatures: 1200° to 1300°C

- More difficult to control than rotary kilns. On the average, vertical kiln lime is not as uniform or high in quality as rotary kiln lime.

- Vertical kilns generally yield lower outputs of lime per man-hour of labor worked.

- Feed requirements: 7.6 to 30 cm lumps, with 7.6 x 15 or 10 x 20 cm being typical.

b. Rotary Kilns

- 5.4 to 10.4 meters diameter by 18 to 120 meters long. A common length is 45 meters.

- Capacity: up to 500 metric tons per day.

- Heat requirements: between 0.9 and 2.77 million kcal per metric ton of lime, depending on types and sizes of stone and kiln design. Preheat sections, lime coolers, and intermediate heat exchangers are all used to improve kiln heat economy.

- Kilns are generally installed at 3° to 5° inclination to the horizontal.

- Rotational speed: 30 to 50 seconds per revolution.

- No more than 10% of the inside of the kiln is filled with stone or lime.

- Oyster shells are almost always calcined in rotary kilns. The flat nature and small size (0.6 to 3.0 cm) of shells generally precludes their use in vertical kilns.

- Typical analyses of commercial quicklimes are given in Table 5.

Table 5. COMPOSITION OF COMMERCIAL QUICKLIMES

Component	High-Calcium Quicklimes % range	Dolomitic Quicklimes % range
CaO	93.25 - 98.00	55.50 - 57.50
MgO	0.30 - 2.50	37.60 - 40.80
SiO_2	0.20 - 1.50	0.10 - 1.50
Fe_2O_3	0.10 - 0.40	0.05 - 0.40
Al_2O_3	0.10 - 0.50	0.05 - 0.50
H_2O	0.10 - 0.90	0.10 - 0.90
CO_2	0.40 - 1.50	0.40 - 1.50

[a]The values given in each range do not necessarily represent minimum and maximum percentages.

•Typical ground quicklime product size:

100% -8 mesh
40 to 60% -100 mesh

•Typical pulverized quicklime product size:

100% -20 mesh
80 to 90% -100 mesh

•Capacities of size reduction machinery: (typical)

Hammer mills, 1.5 to 20 metric tons per hour
Ring roller mills, 1 to 40 metric tons per hour

•A typical composition of kiln exhaust gases (average temperatures, 420° to 980°C) is presented in Table 6.

Table 6. COMPOSITION OF KILN EXHAUST GASES

Component	Volume %
Nitrogen	59.7
Carbon dioxide	24.3
Water	15.3
Oxygen	0.7

•Typical kiln exhaust gas generation for a coal-fired rotary kiln producing 182 metric tons per day is presented in Table 7.

Table 7. VOLUMES OF KILN GAS GENERATED IN CALCINING

Fuel/Lime Ratio	kg gas per metric ton of lime
1:3	4,445
1:4	3,555
1:5	2,970

4. Utilities

- Power required to drive rotary kilns: 3 to 225 kW (estimated), for kilns (rotary) producing from 15 to 450 metric tons per day.

- Water for lime cooling: about 70 cubic meters per hour for a typical 180 metric ton per day unit.

- For grinding or pulverizing quicklime: 4 to 25 kWh per metric ton of material ground (estimated); this includes hammer mills, ring roller mills, or ball mills, generally with air classifiers.

5. Waste Streams

- Gaseous emissions of carbon dioxide to the atmosphere (if not recovered beneficially). For a pulverized coal-fired kiln using a 1 to 4 fuel-lime ratio, CO_2 represents approximately 42% of the total flue gases by weight.

- Fluorine-containing minerals are found in some limestone deposits. These may be a source of fluorine emissions, depending on their chemical association.

- Gaseous emissions of SO_2 and SO_3 from the combustion of sulfur-containing coal or fuel oil. Sulfur oxides may also be emitted from decomposition and oxidation of sulfides and sulfates in the limestone itself. The concentration varies widely with the limestone in use.

- Gaseous emissions of SO_2 and SO_3 from the combustion of sulfur-containing coal or fuel oil.

- Gaseous emissions of oxides of nitrogen from the combustion of fuel for calcining.

- Emissions of particulate solids (fly ash) resulting from the burning of coal as a heat source for calcining.

- Fugitive emissions of particulate quicklime from kiln discharge; approximately 90 grams per kilogram of lime produced in rotary and 3.5 grams in vertical kilns.

- Airborne emissions of soot and tars resulting from incomplete combustion of fuels used as heat source for calcining.

•Table 8 summarizes fugitive emissions from calcination/pulverizing and their control methods.

Table 8. TYPICAL FUGITIVE LIME EMISSIONS AND CONTROL METHODS

Source or Operation	Particulate Emissions Grams/cu meter	Collection Efficiency, %	Control Method
Vertical lime kiln	0.70 - 2.29		none
Rotary kiln	0.002	99.99	glass bag filter
Rotary kiln	0.05 - 0.18	99.7 - 97.5	4-stage cyclonic scrubber
Rotary kiln	9.80	70.0	high efficiency cyclones
Rotary kiln	0.50	95.0	single-stage precipitator
Rotary kiln	0.25 - 0.57	96 - 97	Venturi scrubber
Rotary kiln	0.7 - 0.9	97.5	Impingement scrubber
Calcimatic kiln	0.05	99.2	glass bag filter

•An analysis of solid particulate emissions from stacks in natural gas-fired rotary kilns using primary collection devices is presented in Table 9.

Table 9. COMPOSITION OF PARTICULATES FROM NATURAL GAS FIRED KILNS

Emission Component	Chemical Analysis High-Calcium Lime, wt. %	Chemical Analysis Dolomitic Lime, wt. %
Acid insoluble	0.66	0.45
Heavy metal oxides (R_2O_3)	0.97	0.35
$CaCO_3$	23.06	64.30
CaO	66.32	7.23
MgO	1.40	28.20
$CaSO_4$	1.22	0.27
$Ca(OH)_2$	6.37	----

A typical screen analysis of the solid particulates described above is shown in Table 10.

Table 10. PARTICLE SIZE OF PARTICULATES FROM NATURAL GAS FIRED KILNS

Tyler mesh size	wt.%
+65	0.5
-65 + 100	1.5
-100 + 150	3.6
-150 + 200	10.0
-200 + 270	9.7
-270 + 325	8.4
-325 + 400	7.5
- 400[a]	58.8

[a]Average particle size: 5 to 6 microns

- Dust control is a greater problem with rotary than with modern vertical kilns.

- Solid particulate emissions from a rotary kiln generally range from 2 to 8% by weight of the limestone charge; can be as high as 15% of the lime produced without proper controls.

- Lime dust collected from various air emission abatement devices is heterogeneous with regard to size and composition. The solid waste by-product is difficult to sell. Any wet sludge obtained from wet collectors have the additional problem of requiring drying before disposal. In most cases, these wastes are usually accumulated in segregated waste piles or lagoons at the plant site.

6. EPA Source Classification Code

3-05-016-03 Calcining-vertical kiln
3-05-016-04 Calcining-rotary kiln

7. References

Boynton, R. S. Chemistry and Technology of Lime and Limestone. New York, John Wiley and Sons, Inc., 1966. 520 p.

Cotter, P. G. Lime and Calcium. In: Mineral Facts and Problems. U.S. Dept. of the Interior, 1965. 9 p.

Herod, D. C. Woodville Lime Takes Aim at Premium Market. Pit and Quarry, 1975. 67(5):90-93.

Krohn, B. J. U.S. Lime Division's Dust Abatement Efforts. Pit and Quarry, 1974. 66(5):87-92.

Lewis , C. J., and B. B. Crocker. The Lime Industry's Problem of Airborne Dust. Journal of Air Pollution Control, January 1969. 9:31-39.

Lime and Limestone. In: Kirk-Othmer Encyclopedia of Chemical Technology, Standen, A. (ed.). New York, John Wiley and Sons, Inc., 1967. 12:414-460.

Truffner, W. E. Allied Product Company's Expanded Montevallo Plant. Pit and Quarry, 1975. 67(5):98-103.

Hydration/Packing

1. Function - Hydrated lime (calcium hydroxide) is manufactured in this process step by slowly adding water to ground quicklime in predetermined proportions from process step 5 in a hydrator or slaker. Both batch and continuous hydrators are employed. Mechanical agitation is used to insure thorough mixing. Continuous hydrators are steadily replacing batch units. Some lime dust is emitted from the stack of the hydrator. This dust is recovered in a washer-scrubber collector and the resulting milk of lime is recycled directly to the hydrator or its pre-mix chamber. In this way, valuable lime is recovered and air emissions from this source are minimized.

   Normally hydrated dolomitic lime consists of calcium hydroxide and magnesium oxide with little if any magnesium hydroxide. However, dolime can be completely hydrated in an autoclave under pressure.

   Closed circuit conveyors are used for transporting the semiprocessed hydrate from the hydrator to the finishing part of the process. This is done to prevent recarbonation of the hydrated lime. Usually a system of horizontal screw conveyors and bucket elevators are employed.

   Any uncalcined lime, overburned material or silica in the hydrated products is removed in an air separator after the hydration step is completed. Centrifugal air separators are universally employed in the final milling and classification of the product.

   Finished dry hydrate product is transported to product silos and from there to bagging machines.

   Some hydration of lime is also carried out with great excess of water so that a slurry of "milk of lime" solution is produced instead of a dry powder. This process is usually called slaking. Slaking equipment is usually located at the plant site of the user. Only in cases where the lime producer has a captive use for slaked lime will a slaker be employed at the lime plant proper.

2. Input Materials

   Quantities are based on one metric ton of dry hydrated lime:

   - Quicklime: approximately 0.757 ton
   - Water: approximately 0.243 ton

   The above figures are theoretical quantities required to make a dry hydrated lime from pure quicklime. Generally a slight excess of water is added to offset losses from the steam formed and lost by the heat of hydration.

3. Operating Parameters

•Table 11 describes the composition of some commercial hydrated limes.

Table 11. TYPICAL PRODUCT ANALYSES OF COMMERCIAL HYDRATED LIMES

Component	High-Calcium Hydrated Limes, % Range	Highly Hydrated Dolomitic Lime, % Range
CaO	71 - 74	41 - 45
MgO	0.5 - 2	25 - 30
H_2O	24 - 25	27 - 28
CO_2	0.3 - 0.7	0.3 - 0.7
SiO_2	0.2 - 0.5	0.2 - 0.5
R_2O_3 (heavy metal oxides)	0.1 - 0.3	0.1 - 0.3

•Standard hydrated lime has a fineness of 95% passing 200 mesh. A "superfine" grade is produced by pulverizing and/or air classification to a fineness of 95.5% through a 325 mesh.

•Capacities of hydrators: 1 to 15 metric tons per hour.

•Typical feedstock size: no larger than 5 cm top size; 1.25 cm size works best in most hydrators.

•Storage facilities for raw quicklime feed to the hydrators consist of tall silos with hopper bottoms having individual capacities ranging from about 90 to 550 metric tons.

•Typical bagger operations: 12 to 15, 22.7-kilogram bags per minute.

4. Utilities

•Total energy requirement: 2.5 to 17.5 kWh per metric ton of hydrate produced (estimated).

•Air classification energy requirement: 4 to 8 kWh per metric ton of lime hydrate produced (estimated).

5. Waste Streams

•Fugitive emissions of high dewpoint gases containing particulate lime particles. Practically all lime hydrating plants are equipped with recovery equipment of one type or another, i.e., direct spray scrubbers and condensers.

- Fugitive solid particulate hydrated lime emissions from milling and bag packing operations: approximately 2.5 grams per kilogram of quicklime handled.

- Slaker processes do not contribute to air pollution problems, compared to hydrator processes because of the large quantities of water used in slakers. No steam or gases are discharged which can entrain solid lime or emissions.

- No liquid wastes are generated from slaker or hydrator operations.

- Typical emissions and control methods are described in Table 12.

Table 12. EMISSIONS AND CONTROL METHODS FOR HYDRATION/PACKING

Source or Operation	Particulate Emissions Grams/cu meter	Collection Efficiency,%	Control Method
Hydration	0.02 - 2.15		Water sprays in stack
Hydration	0.02 - 0.16		Wet scrubber
Hydrate milling	no visible dust	99+	Bag filter
Hydrate loader and packer	0.02	99+	Bag filter

- Waste solid tailings from the hydrate milling step, composed of under- and over-sized materials including silica, iron and aluminum oxides, and calcium and magnesium oxides. This amounts to about 10% of the total hydrate produced. Liquor from scrubbers and water sprays is generally recycled in the process for recovery of solid wastes.

6. EPA Source Classification Code

None

7. References

Boynton, R. S. Chemistry and Technology of Lime and Limestone. New York, John Wiley and Sons, Inc., 1966. 520 p.

Lewis, C. J., and B. B. Crocker. The Lime Industry's Problem of Airborne Dust. Journal of Air Pollution Control, January 1969. 9:31-39.

Lime and Limestone. In: Kirk-Othmer Encyclopedia of Chemical Technology, Standen, A. (ed.). New York, John Wiley and Sons, Inc., 1967. 12:414-460.

APPENDIX A

RAW MATERIALS

Table A-1. TYPICAL COMPOSITIONS OF RAW MATERIALS

Component	Wt. %
Limestone Rock	
CaO	55.28
MgO	0.46
CO_2	43.73
SiO_2	0.42
Al_2O_3	0.13
Fe_2O_3	0.05
SO_3	0.01
P_2O_5	---
Na_2O	---
K_2O	---
H_2O	---
Other	0.08
Dolomitic Limestone Rock	
CaO	31.20
MgO	20.45
CO_2	47.87
SiO_2	0.11
Al_2O_3	0.30
Fe_2O_3	0.19
SO_3	---
P_2O_5	---
Na_2O	0.06
K_2O	---
H_2O	---
Other	---
Sea Shells	
$CaCO_3$	91.90 - 95.00
$MgCO_3$	0.89 - 1.44
SiO_2	2.20 - 4.50
SO_4 (as $CaSO_4$)	0.43 - 0.51
Al_2O_3	0.11 - 0.28
Fe_2O_3	0.17 - 0.27

APPENDIX B

PRODUCTS

Table B-1. LIST OF PRODUCTS

Quicklime
Dolime
Hydrated lime
Hydrated dolime
Carbon Dioxide
Refractory grain

APPENDIX C

COMPANIES AND PRODUCTS

Table C-1. COMPANIES AND PRODUCTS OF THE LIME INDUSTRY

COMPANY	CITY OR COUNTY, AND STATE	TYPE OF OPERATION[a]
Alabaster Lime Company	Siluria, Alabama	lime kiln and plant
Allied Chemical Corporation	East Baton Rouge Co., Louisiana	quarry and plant
	Onondaga Co., New York	plant
Allied Product Company	Montevallo, Alabama	
Aluminum Company of America	Saline Co., Arkansas	plant
	Calhoun Co., Texas	plant
Amalgamated Sugar Company	Canyon Co., Idaho	
	Malheur Co., Oregon	plant
	Minidoka Co., Idaho	
	Twin Falls Co., Idaho	
American Crystal Sugar Company	Clay Co., Minnesota	quicklime, shaft kilns
	Otero Co., Colorado	quicklime, shaft kilns
	Pembina Co., North Dakota	shaft kiln
	Polk Co., Minnesota	two plants, quicklime, shaft kilns
	Yolo Co., California	shaft kiln
Amstar Corporation	Maricopa Co., Arizona	
	Monterey Co., California	shaft and rotary kilns
	Yolo Co., California	shaft and rotary kilns
The Anaconda Company	Anaconda, Montana	plant
Armco Steel Company	Harris Co., Texas	plant
Ash Grove Cement Company	Greene Co., Missouri	plant
	Multnomah Co., Oregon	plant
Austin White Lime Company	Travis Co., Texas	plant

Table C-1 (Continued). COMPANIES AND PRODUCTS OF THE LIME INDUSTRY

COMPANY	CITY OR COUNTY, AND STATE	TYPE OF OPERATION
J. E. Baker Company	Sandusky Co., Ohio York, Pennsylvania	plant plant
S. W. Barrick & Sons, Inc.	Frederick Co., Maryland	plant
BASF Wyandotte Corporation	Wayne Co., Michigan	quicklime, nine shaft kilns
Basic, Inc.	Seneca Co., Ohio	plant
Basic Magnesia, Inc.	Port St. Joe, Florida	plant
Battery Park Fish and Oyster Corporation	Louisa Co., Virginia	
Bethlehem Steel Corporation	Adams Co., Pennsylvania Erie Co., New York Lebanon Co., Pennsylvania	quarry plant plant
Black River Mining Company	Butler, Kentucky	
Bowaters Southern Paper Corporation	McMinn Co., Tennessee	
C F & I Steel Corporation	Pueblo, Colorado	natural-frequency-vibrating kiln plant
Champion International	Harris Co., Texas Hernando Co., Florida	227 tons per day rotary kiln, hydrating facilities plant
Chemstone Corporation	Shenandoah Co., Virginia	plant
Cheney Lime and Cement Company	Shelby Co., Alabama	lime kiln and plant

Table C-1 (Continued). COMPANIES AND PRODUCTS OF THE LIME INDUSTRY

COMPANY	CITY OR COUNTY, AND STATE	TYPE OF OPERATION
C L M Corporation	Douglas Co., Wisconsin	quicklime and hydrated lime, 2 rotary kilns, one continuous hydrator
Corchem, Inc.	Jackson Co., Mississippi	plant
G & W H Corson, Inc.	Montgomery Co., Pennsylvania	
Cuyahoga Lime Company	Cuyahoga Co., Ohio	plant
Diamond Shamrock Corporation	Lake Co., Ohio	plant
Diamond Springs Lime Company	El Dorado Co., California	rotary kiln and continuous hydrator
Dixie Lime and Stone Company	Sumterville, Florida	plant
Domtar Chemicals, Inc.,	Pierce Co., Washington	plant
Dow Chemical, U.S.A.	Brazoria Co., Texas	quicklime, 3 rotary kilns, continuous hydrator
	Mason Co., Michigan	quicklime, 3 rotary kilns, continuous hydrator
The Flintkote Company	Clark Co., Nevada	2 plants, batch and continuous hydrators, rotary kilns
	Contra Costa Co., California	shaft and rotary kilns
	Frederick Co., Virginia	plant
	Los Angeles Co., California	shaft and rotary kilns
	Tooele Co., Utah	2 shaft kiln plants
	Yavapai Co., Arizona	
W. S. Frey Company, Inc.	Frederick Co., Virginia	plant
Gaspro, Ltd.	Honolulu Co., Hawaii	rotary kiln & continuous hydrator

Table C-1 (Continued). COMPANIES AND PRODUCTS OF THE LIME INDUSTRY

COMPANY	CITY OR COUNTY, AND STATE	TYPE OF OPERATION
Germany Valley Limestone Company	Pendleton Co., West Virginia	plant
Great Western United Corporation	Adams Co., Colorado	pot-kiln plant
	Big Horn Co., Wyoming	pot-kiln plant
	Boulder Co., Colorado	2 pot-kiln plants
	Larimer Co., Colorado	2 pot-kiln plants
	Logan Co., Colorado	pot-kiln plant
	Morgan Co., Colorado	shaft-kiln plant
	Morrill Co., Nebraska	pot-kiln
	Scottsbluff Co., Nebraska	3 plants, 5 pot-kilns
	Sedgwick Co., Colorado	pot-kiln plant
	Yellowstone Co., Montana	
	Sherman Co., Kansas	plant
	Weld Co., Colorado	2 pot-kiln plants
Hawaiian Commercial and Sugar Company, Ltd.	Maui Co., Hawaii	rotary kiln & continuous hydrator
Holly Sugar Corporation	Coshen Co., Wyoming	shaft kiln
	Deaf Smith Co., Texas	
	Delta Co., Colorado	
	Glenn Co., California	shaft kilns
	Imperial Co., California	shaft kilns
	Orange Co., California	shaft kilns
	Richland Co., Montana	
	San Joaquin, California	shaft kilns
	Washokie Co., Wyoming	
Honey Creek Lime Company	Mifflin Co., Pennsylvania	
Huron Lime Company	Erie Co., Ohio	plant
Inland Steel Company	Lake Co., Indiana	
Jones & Laughlin Steel Corporation	Berkeley Co., West Virginia	plant

Table C-1 (Continued). COMPANIES AND PRODUCTS OF THE LIME INDUSTRY

COMPANY	CITY OR COUNTY, AND STATE	TYPE OF OPERATION
Kaiser Aluminum and Chemicals Corporation	Monterey Co., California	rotary kiln & continuous hydrator
Kennecott Copper Corporation	Gila Co., Arizona	
	Grant Co., New Mexico	rotary kiln
	Salt Lake Co., Utah	lime kiln
Kerr-McGee Chemical Corporation	San Bernardino Co., California	
Lee Lime Corporation	Berkshire Co., Massachusetts	plant
Edward C. Levy Company	Wayne Co., Michigan	quicklime, shaft & rotary kilns
Pete Lien & Sons	Pennington Co., South Dakota	1 rotary kiln, 1 vertical kiln, continuous hydrator
Linwood Stone Products Company, Inc.	Scott Co., Iowa	quicklime & hydrated lime, 3 rotary kilns
Magma Copper Company	Pinal Co., Arizona	
Marblehead Lime Company	Adams Co., Illinois	quicklime & hydrated lime, 3 shaft kilns, 1 calcimatic kiln
	Centre Co., Pennsylvania	
	Cook Co., Illinois	quicklime & hydrated lime, 8 rotary kilns
	Lake Co., Indiana	quicklime, 3 rotary kilns
	Tooele Co., Utah	rotary kiln
	Wayne Co., Michigan	quicklime, 2 rotary kilns
Martin-Marietta Corporation	Sandusky Co., Ohio	plant
	Shelby Co., Alabama	
Mathis Mining & Exploration	Grant Co., New Mexico	

Table C-1 (Continued). COMPANIES AND PRODUCTS OF THE LIME INDUSTRY

COMPANY	CITY OR COUNTY, AND STATE	TYPE OF OPERATION
McDonough Brothers, Inc.	Bexar Co., Texas	plant
Mercer Lime and Stone Company	Butler Co., Pennsylvania	plant
Merck Chemical Company	Tuolumne Co., California	
Michigan Sugar Company	Huron Co., Michigan Saginaw Co., Michigan Sanilac Co., Michigan Tuscola Co., Michigan	
Mississippi Lime Company	Ste. Genevieve Co., Missouri	plant
Monitor Sugar Company	Bay Co., Michigan	
Corley L. Moore Lime Plant	Gile Co., Arizona	
Mountain States Lime, Inc.	Utah Co., Utah	
National Gypsum Company	Centre Co., Pennsylvania Giles Co., Virginia Sandusky Co., Ohio	plant plant
National Lime and Stone Company	Wyandot Co., Ohio	plant
Northern Ohio Sugar Company	Hancock Co., Ohio Sandusky Co., Ohio	
Ohio Lime Company	Sandusky Co., Ohio	plant
Olin Corporation	Calcasieu Co., Louisiana	quarry and plant
Pacific Carbide and Alloys Company	Multnomah Co., Oregon	plant

Table C-1 (Continued). COMPANIES AND PRODUCTS OF THE LIME INDUSTRY

COMPANY	CITY OR COUNTY, AND STATE	TYPE OF OPERATION
Paul Lime Plant, Inc.	Cochise Co., Arizona	5 rotary kiln plants
Pfizer, Inc.	Berkshire Co., Massachusetts	plant
	Litchfield Co., Connecticut	plant
	San Bernardino Co., California	fluidized-bed kiln & continuous hydrator
	Sandusky Co., Ohio	plant
Phelps Dodge Corporation	Greenlee Co., Arizona	1 rotary kiln, 1 fluidized-bed kiln plant
PPG Industries, Inc.	Nueces Co., Texas	plant
Puerto Rican Cement Company, Inc.	Ponce, Puerto Rico	
Rangaire Corporation	Independence Co., Arkansas	plant
	Giles Co., Virginia	plant
	Knox Co., Tennessee	plant
Republic Steel Corporation	Lake Co., Ohio	plant
Reynolds Metals Company	Saline Co., Arkansas	plant
Rockwell Lime Company	Manitowoc, Wisconsin	quicklime & hydrated lime, 1 rotary kiln, 1 continuous hydrator
Round Rock Lime Company	Hill Co., Texas	plant
	Williamson Co., Texas	plant
Santa Rita Mining Company	Pima Co., Arizona	mine & calciner
	St. Mary Co., Louisiana	
S. I. Lime Company	Shelby Co., Alabama	

Table C-1 (Continued). COMPANIES AND PRODUCTS OF THE LIME INDUSTRY

COMPANY	CITY OR COUNTY, AND STATE	TYPE OF OPERATION
St. Clair Lime Company	Sequoyah Co., Ohlahoma	quarry and plant
Texas Lime Company	Johnson Co., Texas	plant
Union Carbide Corporation	Ashtabula Co., Ohio	plant
Union Sugar Company	Santa Barbara Co., California	shaft kiln
U. S. Gypsum Company	Comal Co., Texas Orleans Co., Louisiana Ottawa Co., Ohio	plant quarry and plant plant
U. S. Steel Corporation	Lorain Co., Ohio	plant
Utah-Idaho Sugar Company	Bonneville Co., Idaho Box Elder Co., Utah Grant Co., Washington Yakima Co., Washington	
Valley Mineral Products Corporation	St. Francois Co., Missouri	plant
Vulcan Materials Company	Cook Co., Illinois	
Warner Company	Center Co., Pennsylvania Chester Co., Pennsylvania	plant plant
Weatherly and Morrison Lime Company	White Pine Co., Nevada	rotary kilns
Western Lime and Cement Company	Brown Co., Wisconsin Dodge Co., Wisconsin	quicklime and hydrated lime, 5 rotary kilns, 1 batch hydrator hydrated lime, 5 shaft kilns, 1 continuous hydrator

Table C-1 (Continued). COMPANIES AND PRODUCTS OF THE LIME INDUSTRY

COMPANY	CITY OR COUNTY, AND STATE	TYPE OF OPERATION
Western Lime and Cement Company (continued)	Fond DuLac Co., Wisconsin	quick & hydrated lime, 5 shaft kilns, 1 batch hydrator
Williams Lime Manufacturing Company	Knox Co., Tennessee	plant
Woodville Lime and Chemical Company	Sandusky Co., Ohio	

[a]The following list of companies, comprising the lime industry, either make quicklime or dolime and may or may not make the hydrated versions. Information sources do not differentiate between the different producers. All producers generate carbon dioxide, but it is not known which ones recover the material beneficially.

TECHNICAL REPORT DATA
(Please read Instructions on the reverse before completing)

1. REPORT NO. EPA-600/2-77-023r	2.	3. RECIPIENT'S ACCESSION NO.
4. TITLE AND SUBTITLE Industrial Process Profiles for Environmental Use; Chapter 18. The Lime Industry		5. REPORT DATE February 1977
		6. PERFORMING ORGANIZATION CODE
7. AUTHOR(S) A.C.Doumas, B.P.Shepherd and P.E.Muehlberg (Dow Chem.) Terry Parsons and Glynda E. Wilkins, Editors		8. PERFORMING ORGANIZATION REPORT NO.
9. PERFORMING ORGANIZATION NAME AND ADDRESS Radian Corporation 8500 Shoal Creek Boulevard, P.O. Box 9948 Austin, Texas 78766		10. PROGRAM ELEMENT NO. 1AB015
		11. CONTRACT/GRANT NO. 68-02-1319/Task 34
12. SPONSORING AGENCY NAME AND ADDRESS Industrial Environmental Research Laboratory Office of Research and Development U.S. ENVIRONMENTAL PROTECTION AGENCY Cincinnati, Ohio 45268		13. TYPE OF REPORT AND PERIOD COVERED Initial: 8/75-11/76
		14. SPONSORING AGENCY CODE EPA/600/12

15. SUPPLEMENTARY NOTES

16. ABSTRACT

The catalog of Industrial Process Profiles for Environmental Use was developed as an aid in defining the environmental impacts of industrial activity in the United States. Entries for each industry are in consistent format and form separate chapters of the study. The lime industry comprises operations which mine dolomite on limestone deposits or dredge oyster shells and process these carbonate materials into lump, crushed or pulverized calcined products. The chief products in this category are quicklime, slaked or hydrated lime, dolime, and hydrated dolime. One chemical tree, one process flow sheet and six process descriptions have been prepared to characterize the industry. Within each process description available data have been presented on input materials, operating parameters, utility requirements and waste streams. Data related to the subject matter, including company, product and raw material data, are included as appendices.

17. KEY WORDS AND DOCUMENT ANALYSIS

a. DESCRIPTORS	b. IDENTIFIERS/OPEN ENDED TERMS	c. COSATI Field/Group
Pollution Carbonates	Process Assessment	13B
Industrial Processes	Environmental Impact	13H
Chemical Engineering	Lime Industry	07A
Calcium Oxides	Oyster Shells	07B
Dolomite (Rock)	Quicklime	08G
Limestone	Slaked Lime	
Oysters	Dolime	06C

18. DISTRIBUTION STATEMENT Release to Public	19. SECURITY CLASS (This Report) Unclassified	21. NO. OF PAGES 55
	20. SECURITY CLASS (This page) Unclassified	22. PRICE

EPA Form 2220-1 (9-73)

*U.S. GOVERNMENT PRINTING OFFICE: 1979-659-510/31