United States
Environmental Protection
Agency

Environmental Monitoring
and Support Laboratory
P.O. Box 15027
Las Vegas NV 89114

EPA-600/7-78-122
June 1978

Research and Development

EPA

Anion Exchange Method for the Determination of Plutonium in Water:

Single-Laboratory Evaluation and Interlaboratory Collaborative Study

Interagency Energy-Environment Research and Development Program Report

RESEARCH REPORTING SERIES

Research reports of the Office of Research and Development, U.S. Environmental Protection Agency, have been grouped into nine series. These nine broad categories were established to facilitate further development and application of environmental technology. Elimination of traditional grouping was consciously planned to foster technology transfer and a maximum interface in related fields. The nine series are:

1. Environmental Health Effects Research
2. Environmental Protection Technology
3. Ecological Research
4. Environmental Monitoring
5. Socioeconomic Environmental Studies
6. Scientific and Technical Assessment Reports (STAR)
7. Interagency Energy-Environment Research and Development
8. "Special" Reports
9. Miscellaneous Reports

This report has been assigned to the INTERAGENCY ENERGY—ENVIRONMENT RESEARCH AND DEVELOPMENT series. Reports in this series result from the effort funded under the 17-agency Federal Energy/Environment Research and Development Program. These studies relate to EPA'S mission to protect the public health and welfare from adverse effects of pollutants associated with energy systems. The goal of the Program is to assure the rapid development of domestic energy supplies in an environmentally-compatible manner by providing the necessary environmental data and control technology. Investigations include analyses of the transport of energy-related pollutants and their health and ecological effects; assessments of, and development of, control technologies for energy systems; and integrated assessments of a wide range of energy-related environmental issues.

This document is available to the public through the National Technical Information Service, Springfield, Virginia 22161

EPA-600/7-78-122
June 1978

ANION EXCHANGE METHOD FOR THE DETERMINATION OF PLUTONIUM IN WATER: Single-Laboratory Evaluation and Interlaboratory Collaborative Study

by

C. T. Bishop, A. A. Glosby, R. Brown, and C. A. Phillips
Environmental Assessment and Planning Section
Mound Facility
Miamisburg, Ohio 45342

Contract No. EPA-IAG-D6-0015

Project Officer

Erich W. Bretthauer
Monitoring Systems Research and Development Division
Environmental Monitoring and Support Laboratory
Las Vegas, Nevada 89114

ENVIRONMENTAL MONITORING AND SUPPORT LABORATORY
OFFICE OF RESEARCH AND DEVELOPMENT
U. S. ENVIRONMENTAL PROTECTION AGENCY
LAS VEGAS, NEVADA 89114

DISCLAIMER

This report has been reviewed by the Environmental Monitoring and Support Laboratory-Las Vegas, U. S. Environmental Protection Agency, and approved for publication. Approval does not signify that the contents necessarily reflect the views and policies of the U. S. Environmental Protection Agency, nor does mention of trade names or commercial products constitute endorsement or recommendation for use.

FOREWORD

Protection of the environment requires effective regulatory actions which are based on sound technical and scientific information. This information must include the quantitative description and linking of pollutant sources, transport mechanisms, interactions, and resulting effects on man and his environment. Because of the complexities involved, assessment of specific pollutants in the environment requires a total systems approach which transcends the media of air, water, and land. The Environmental Monitoring and Support Laboratory-Las Vegas contributes to the formation and enhancement of a sound integrated monitoring data base for exposure assessment through programs designed to:

- develop and optimize systems and strategies for monitoring pollutants and their impact on the environment
- demonstrate new monitoring systems and technologies by applying them to fulfill special monitoring needs of the Agency's operating programs.

This report presents the results of a single-laboratory evaluation and an interlaboratory collaborative study of a method for measuring plutonium in water. Such studies are extremely useful as they demonstrate the state of the art of the analytical methodology which will ultimately provide the information for decisions associated with environmental standards and guidelines. Collaborative studies also allow each participating laboratory to critically evaluate its capabilities in comparison with other laboratories and often document the need for taking corrective action to improve techniques. For further information, contact the Methods Development and Analytical Support Branch, Monitoring Systems Research and Development Division, Environmental Monitoring and Support Laboratory, Las Vegas, Nevada.

George B. Morgan
Director
Environmental Monitoring and Support Laboratory
Las Vegas

ABSTRACT

This report gives the results of a single-laboratory evaluation and an interlaboratory collaborative study of a method for determining plutonium in water. The method was written for the analysis of one-liter samples and involves coprecipitation, acid dissolution, anion exchange, electrodeposition, and alpha pulse height analysis. The complete method is given in the first appendix to the report.

After the single-laboratory evaluation of the selected method, four samples were prepared for the collaborative study. There were two river water samples, a substitute ocean water sample, and a sample containing sediment. These samples contained plutonium-239 and plutonium-238 at concentrations ranging from 0.42 to 28.9 dis/min/liter.

Standard deviations of the collaborative study plutonium concentrations ranged from 5% to 13%. In three cases standard deviations agreed with what was expected from counting statistics. It is believed that hydrolysis occurred in the river water samples resulting in errors greater than what was expected from counting statistics.

CONTENTS

FOREWORD iii
ABSTRACT iv
LIST OF FIGURES vi
LIST OF TABLES vii
ACKNOWLEDGEMENTS ix
INTRODUCTION 1
SUMMARY 2
CONCLUSIONS AND RECOMMENDATIONS 3
CRITERIA 5
CHOICE OF METHOD 6
PREPARATION OF REFERENCE MATERIALS 7
SINGLE-LABORATORY EVALUATION 9
INTERLABORATORY COLLABORATIVE STUDY 15
DISCUSSION OF RESULTS 30
REFERENCES 38
APPENDIX 1: Tentative Method for the Determination of Plutonium-239 and Plutonium-238 in Water (By a Coprecipitation Anion Exchange Technique) 42
APPENDIX 2: Collaborative Study Instructions - Plutonium in Water 62
APPENDIX 3: Questionnaire on Collaborative Study 63
APPENDIX 4: Data on Plutonium-242 Tracer 64
APPENDIX 5: Laboratories Participating in the Plutonium in Water Collaborative Study . . . 65
APPENDIX 6: Table of Rejected Results 67

LIST OF FIGURES

No.		Page
1.	Sample 1 (river water) plutonium concentrations measured in collaborative study	31
2.	Sample 2 (river water) plutonium concentrations measured in collaborative study	31
3.	Sample 3 (substitute ocean water) plutonium concentrations measured in collaborative study . . .	32
4.	Least squares fit to Sample 1 (river water) plutonium-239 concentrations as a function of time .	32

LIST OF TABLES

No.		Page
1.	Reference Samples for Plutonium-in-Water Collaborative Study	10
2.	Alpha Energies of Isotopes of Interest in the Plutonium-in-Water Study	12
3.	Single-Laboratory Evaluation Concentrations and Recoveries for Sample 1 (River Water)	13
4.	Single-Laboratory Evaluation Concentrations and Recoveries for Sample 2 (River Water)	13
5.	Single-Laboratory Evaluation Concentrations and Recoveries for Sample 3 (Substitute Ocean Water)	14
6.	Single-Laboratory Evaluation Concentrations and Recoveries for Sample 4 (Sample Containing Sediment)	14
7.	Collaborative Study Plutonium-239 Results for Sample 1 (River Water - Reference Concn = 28.9 dis/min/liter)	17
8.	Collaborative Study Plutonium-238 Results for Sample 1 (River Water - Reference Concn = 9.94 dis/min/liter)	18
9.	Collaborative Study Plutonium-239 Results for Sample 2 (River Water - Reference Concn = 0.966 dis/min/liter)	19
10.	Collaborative Study Plutonium-238 Results for Sample 2 (River Water - Reference Concn = 7.51 dis/min/liter)	20

LIST OF TABLES (Cont'd)

11. Collaborative Study Plutonium-239 Results for Sample 3 (Substitute Ocean Water - Reference Concn = 4.44 dis/min/liter) 21

12. Collaborative Study Plutonium-238 Results for Sample 3 (Substitute Ocean Water - Reference Concn = 0.53 dis/min/liter) 22

13. Collaborative Study Plutonium-239 Results for Sample 4 (Sample Containing Sediment - Reference Value = 0.42 dis/min) 23

14. Collaborative Study Plutonium-238 Results for Sample 4 (Sample Containing Sediment - Reference Value = 0.02 dis/min) 24

15. Summary of Plutonium-in-Water Collaborative Study Results 26

16. t-Test for Systematic Errors in Collaborative Study Results 36

17. Overall Standard Deviation of Collaborative Study Results and Standard Deviations Expected From Counting Statistics Errors 37

ACKNOWLEDGEMENTS

The authors would like to thank all those individuals from the participating laboratories involved in the collaborative study (cf. Appendix 5). Special thanks are due to Paul B. Hahn of the U.S. Environmental Protection Agency's Environmental Monitoring and Support Laboratory, Las Vegas, Nevada, who worked with the authors on all phases of this study. Also thanks are due to Isabel M. Fisenne of the U.S. Department of Energy's Environmental Measurements Laboratory, New York, New York, and Michael Hiatt of the U.S. Environmental Protection Agency's Environmental Monitoring and Support Laboratory, Las Vegas, Nevada, for their assistance in checking the standards used in this study.

At Mound many individuals assisted in making this collaborative study a success. Thanks are due to Warren E. Sheehan, F. Keith Tomlinson, and Billy M. Farmer for counting many samples. We would like to thank Bob Robinson, Harold Kirby and Vito R. Casella for many helpful discussions and suggestions. Finally, the advice and assistance given by Pyrtle W. Seabaugh, Clifford R. Rudy, and Louise A. Gibson in regard to statistical calculations are acknowledged.

INTRODUCTION

Although most of the plutonium released into rivers or other bodies of water is eventually deposited and adsorbed onto sediments, there is still a need to determine environmental levels of plutonium in fresh water and ocean water. Such determinations need to be made on natural waters, on waters near an area where contamination is suspected, and on water streams entering the environment from facilities handling plutonium. Very low levels of plutonium can be found almost anywhere in the world because of fallout from atmospheric testing of nuclear weapons. It has been estimated that about 300 kilocuries of plutonium-239 have been distributed throughout the world mainly as a result of fallout from the explosions of large nuclear weapons (Harley, 1971).

Concentrations of plutonium above fallout levels are likely to be found around facilities working with plutonium-239* for weapons use or around facilities working with plutonium-238 for heat sources. Waters around the area of underground nuclear weapons testing and waters in the vicinity of waste disposal sites should also be analyzed for plutonium. Likewise since nuclear reactors produce some plutonium-239 and breeder reactors will produce even more, waters near these reactors and the nuclear fuel reprocessing plants for these facilities will also have to be monitored for plutonium.

"Maximum permissible concentrations" of plutonium in water for occupational exposures have been recommended by the International Commission on Radiological Protection and the National Council on Radiation Protection and Measurement. The U.S. Atomic Energy Commission in turn set "radiation concentration guides" for nonoccupational exposures (i.e., allowable concentrations in unrestricted areas). For the isotopes of plutonium, this value was 11.1 disintegrations per minute per milliliter (dis/min/ml) in water. In this study, water samples having plutonium concentrations a few orders of magnitude below this concentration were analyzed.

---

*Whenever this report refers to the determination of plutonium-239, plutonium-240 is also included since the alpha peaks of these isotopes cannot be resolved.

To establish a suitable method for determining plutonium in water, the U.S. Environmental Protection Agency wanted an evaluation of a particular method that was capable of determining plutonium at concentrations between 0.1 and 30 dis/min/liter. This evaluation was carried out by an extensive single-laboratory evaluation followed by a collaborative study involving 18 laboratories.

SUMMARY

The purpose of this report is to present the results of a single-laboratory evaluation and a collaborative study of a tentative method for the determination of plutonium in water. The method is very similar to a method developed for ocean water (Wong, 1971) that has been used by many different laboratories involved in the analysis of plutonium in water at environmental levels. The method was selected after a literature search and a preliminary laboratory evaluation.

The single-laboratory evaluation was carried out at the U.S. Energy Research and Development Administration's (ERDA's) Mound Laboratory* in Miamisburg, Ohio. Mound Facility did the single-laboratory evaluation and conducted the collaborative study for the EPA under the terms of an "Interagency Agreement" with the U.S. Environmental Protection Agency's (EPA's) Environmental Monitoring and Support Laboratory at Las Vegas, Nevada. The single-laboratory evaluation was carried out using actual waste-water samples from Mound Facility and with samples prepared for the collaborative study. Criteria that were established for the method were checked in the single-laboratory evaluation.

Twenty-three laboratories agreed to participate in the collaborative study and at the end of five months, 18 laboratories had submitted results. Data from 14 of these laboratories have been evaluated in this report. Duplicates of four different samples were sent to the laboratories participating in the collaborative study. The first two samples were river water samples to which known amounts of plutonium-239 and plutonium-238 had been added. The third sample was a substitute ocean water sample also spiked with known amounts of plutonium.

---

*Since the completion of this work, ERDA has become part of the U.S. Department of Energy, and Mound Laboratory has been renamed Mound Facility. The ERDA was formerly the U.S. Atomic Energy Commission.

The fourth sample was prepared by adding a National Bureau of Standards (NBS) river sediment sample containing a known amount of plutonium-239 to deionized distilled water. All participating laboratories were supplied with a standard plutonium-242 tracer to eliminate any variance in results due to standardization of the tracer.

The procedure, "Tentative Method for the Determination of Plutonium-239 and Plutonium-238 in Water (By a Coprecipitation Anion Exchange Technique)," and specific collaborative study instructions were sent to each participating laboratory. These are given in this report in Appendices 1 and 2. After the study was completed, a questionnaire was sent to all the participants to obtain additional information about the collaborative study. A copy of this questionnaire is given in Appendix 3; some of the responses are also given with the questionnaire.

CONCLUSIONS AND RECOMMENDATIONS

Single-laboratory evaluation of the plutonium in water procedure chosen for the collaborative study demonstrated that the method met the criteria that were established prior to beginning the study. Accuracy and precision obtained in analyzing 1-liter water samples having plutonium-239 and plutonium-238 concentrations from 0.5 to 30 dis/min/liter were generally good. A negative bias averaging 12% was observed when analyzing two of the collaborative study samples; however, this bias is believed to be due to a hydrolysis of the samples that occurred rather than to an inaccuracy in the analytical method being evaluated. Precisions approached that of counting statistics for some of the samples in both the single-laboratory evaluation and in the collaborative study. Counting statistics precisions were generally in the range of 3 to 13%.

Single-laboratory evaluation of the procedure also showed that the method is applicable to sample volumes up to 20 liters. Chemical yields in analyzing a variety of samples were generally greater than 80%, and yields for the four collaborative study samples determined in the single-laboratory evaluation averaged 85%. The use of uranium, thorium, americium, and polonium tracers indicated that isotopes of these elements did not interfere with the determination of plutonium.

The interlaboratory collaborative study results generally indicated good agreement (better than 10%) with the reference plutonium concentrations in the range of 0.4 to 30 dis/min/liter.

For one sample where the plutonium-238 concentration was only 0.02 dis/min/liter, collaborative study results averaged 0.10 dis/min/liter, indicating a possible blank problem at plutonium concentrations this low. Like the single-laboratory evaluation data, the collaborative study data also indicated that the plutonium concentrations in the river water samples were decreasing with time. For samples having plutonium concentrations in the range of 4 to 30 dis/min/liter, "combined within-laboratory standard deviations" of the results averaged 5.7%; in the 0.4 to 1 dis/min/liter plutonium concentration range this average was 11.1%. The precision of the method between laboratories in the plutonium concentration range of 4 to 30 dis/min/liter averaged 6.4%; in the 0.4 to 1 dis/min/liter plutonium concentration range, this average was 5.5%.

Based on the responses to a questionnaire answered by all laboratories participating in the collaborative study, it is believed that only one laboratory of the 14 that were evaluated in this report deviated considerably from the procedure that was being evaluated. This was a deviation in the electrodeposition technique. The average plutonium recovery observed for the 14 laboratories was 69%. In general, the laboratories participating in the study believed the method was a good method, and nine laboratories answered yes to the question, "Do you believe that this would be a good reference method for plutonium in water?"

On the basis of the experience and results of this study, the following recommendations can be made:

1. For samples that are to be stored for longer than a few weeks, acid should be added to a concentration of greater than 0.1 N at the time of collection. In view of the absence of any definite data, a concentration greater than 0.5 N acid is suggested.

2. The tracer employed should be obtained from the National Bureau of Standards or should be standardized either against an NBS standard or with an instrument calibrated with an NBS standard.

3. Either plutonium-242 or plutonium-236 should be used as the tracer depending upon the concentrations and the isotopes to be determined in the water samples to be analyzed.

4. If the water sample contains sediment to which highly refractory plutonium is attached, it would be advisable to separate this sediment and analyze it by an appropriate plutonium-in-soil procedure.

5. If plutonium (VI) is possibly present in a water sample, a step to assure reduction to plutonium (IV) should be added before the coprecipitation with ferric hydroxide.

CRITERIA

An environmental plutonium standard for water has not yet been established, so quantitative values for accuracy, precision, sensitivity, etc., are likewise not established at a specific concentration. Nonetheless, certain criteria were established for the "plutonium-in-water" method to be chosen for collaborative study, based on previously published information on the determination of "environmental levels" of plutonium in water.

The criteria established were as follows:

1. The method shall be applicable to a routine determination requiring relatively inexpensive equipment, and being of such a nature that many samples could be analyzed simultaneously in a relatively short period of time.

2. The accuracy of the method will be dependent upon the pipetting or weighing accuracy.

3. The single-laboratory relative standard deviation of the method, not including the counting statistics error, will be 5% or better at plutonium concentrations of 3 dis/min/liter.

4. The sensitivity of the method with 1-liter samples will be 0.1 dis/min/liter or better.

5. The method shall be applicable to up to 20 liters of fresh water or ocean water.

6. The chemical yield of the method shall be 50% or greater.

7. Uranium, americium, thorium, and polonium must not interfere with the analysis.

8. The method shall be applicable to water samples containing sediment.

These criteria were used as guidelines in the literature search for a suitable method, and were also evaluated once a method was chosen and tested in the single-laboratory evaluation.

CHOICE OF METHOD

The literature search uncovered several potentially good procedures for the determination of plutonium in water (Livingston et al., 1975a; Scott and Reynolds, 1975; Hodge and Gurney, 1975; McDowell et al., 1974; Golchert and Sedlet, 1972; Harley, 1972; Wong, 1971; Talvitie, 1971; Kooi and Hollstein, 1962). In addition, to ensure that this information was up to date, several laboratories known to be presently involved in measuring plutonium in environmental samples were contacted by phone. Chemists at these laboratories provided useful information on the determination of plutonium in water and some references not yet appearing in the abstract journals were obtained (Wong et al., 1976; Sutton et al., 1976).

Although a number of the methods probably could have met the criteria established, time did not allow the evaluation of all these methods. From an examination of the literature, however, it appeared that many investigators were using an iron hydroxide coprecipitation-anion exchange technique (Wong, 1971) to determine plutonium in water. Several authors of papers presented at the "Transuranium Nuclides in the Environment" symposium at San Francisco in 1975 (IAEA, 1976) referred to this method or a similar method. Also, in the published results of a plutonium-in-seawater-and-seaweed intercalibration study in which seventeen laboratories participated (Fukai and Murray, 1975), it was pointed out that "with the exception of one method, all the procedures reported by the laboratories for plutonium analysis used coprecipitation of iron hydroxide followed by separation of plutonium using anion exchange columns."

A recent study (Wong et al., 1976), however, indicated that a manganese dioxide coprecipitation was superior to the iron hydroxide coprecipitation. On the basis of what was found in the literature search, the iron hydroxide coprecipitation method and the manganese dioxide coprecipitation method were chosen for laboratory evaluation.

A decision also had to be made as to which plutonium tracer would be used in the procedure and in the collaborative study. The procedure was written such that either plutonium-242 or plutonium-236 could be used as the tracer depending upon the nature of the sample being analyzed. For the collaborative study, however, it was desired to use only one tracer. The

results of a "Plutonium-in-Soil Collaborative Test" (Hahn et al., 1977) suggested that a common tracer be provided to all participating laboratories to avoid uncertainties introduced by each laboratory standardizing its own tracer.

For this collaborative study, plutonium-242 was chosen for three reasons. First of all, at the time this study was undertaken, plutonium-242 was available as a standard reference material from the National Bureau of Standards (NBS). The purity of the NBS tracer is very high; NBS Standard Reference Material 4334 showed a (Pu-238 + Am-241)/Pu-242 activity ratio of ca 0.0002 in March 1975. A second reason for choosing plutonium-242 was the discussion in the recent publication "Plutonium-242 vs Plutonium-236 as an Analytical Tracer" (Kressin et al., 1975). This publication concluded that plutonium-242 is the better of the two tracers primarily because of its longer half life of 3.87×10^5 yr. A third reason for choosing plutonium-242 as a tracer rather than plutonium-236 was Mound Facility's own experience with plutonium-236 in determining small amounts of plutonium-238. Even though it has been pointed out that plutonium-236 contains less than 0.01% of either plutonium-238 or plutonium-239 (Sill, 1975), its alpha particle energy of 5.77 MeV is higher than the alpha energies of plutonium-238 and plutonium-239. Thus, when an electrodeposited sample is less than perfect, tailing of the 5.77-MeV plutonium-236 peak into the 5.50-MeV plutonium-238 peak can sometimes occur. The 4.90-MeV alpha energy of plutonium-242, however, falls below even the 5.16-MeV alpha energy of plutonium-239, so that this tracer would cause no tailing interference.

Although plutonium-242 was recommended and used in the present study, in certain applications, plutonium-236 would be the preferred tracer to use. If, for example, one were analyzing water containing relatively high concentrations of plutonium-239, it would be advisable to use plutonium-236 tracer. Certainly, in situations where the concentration of plutonium-239 is completely unknown and where the plutonium-238 is not the isotope of greatest interest, plutonium-236 is definitely the preferred tracer.

PREPARATION OF REFERENCE MATERIALS

Four reference materials were prepared for the collaborative study. Three of the samples were prepared by adding standard solutions of plutonium-238 and plutonium-239 to filtered river water or to substitute ocean water. The fourth sample was prepared by adding NBS river sediment (SRM #4350) to deionized distilled water; these sediment samples were prepared individually.

The plutonium-238 that was used to prepare the standard solution was taken from the plutonium-238 that is used to make plutonium-238 heat sources at Mound Facility. This has the following approximate composition in weight percent (Abrahamson et al., 1969): Pu-236, 0.0001%; Pu-238, 80%; Pu-239, 16%: Pu-240, 3.0%; Pu-241, 0.72%; Pu-242, 0.14%. Based on this composition, it would be expected that greater than 99.9% of the alpha activity of this material is due to the plutonium-238. An alpha pulse-height analysis of this plutonium-238 showed that less than 0.2% of the alpha activity was due to plutonium-239 in the sample. The plutonium-239 used to prepare the standard was taken from an NBS isotopic standard (SRM #948). This material had the following composition in weight percent as of September 1, 1972: Pu-238, 0.011%; Pu-239, 91.540%; Pu-240, 7.944%; Pu-241, 0.472%; Pu-242, 0.033%. The plutonium-238 in this sample did contribute significantly to the total alpha activity. Four independent alpha pulse-height analyses showed that 2.9 ± 0.1% (1σ) of the alpha activity was due to plutonium-238.

Before the plutonium-238 and plutonium-239 isotopes were prepared as a standard solution, the americium-241 produced by the decay of the plutonium-241 impurity in both of these isotopes was removed by anion exchange. The presence of americium-241 is especially undesirable because its principal alpha energy is the same as that of plutonium-238. After ion exchange, the samples were taken to near dryness and diluted with 1 M nitric acid to a concentration of about 45 dis/min/ml for the plutonium-238 and about 90 dis/min/ml for the plutonium-239.

The solutions of plutonium-238 and plutonium-239 were standardized at Mound Facility by liquid scintillation counting and by alpha pulse-height analysis comparison to an NBS plutonium-242 standard. The samples were also sent to the Energy Research and Development Administrations's Health and Safety Laboratory in New York. The data from all three standardizations showed good agreement and the specific activities of the plutonium-238 and plutonium-239 solutions were 45.7 ± 0.3 dis/min/g and 89.3 ± 0.6 dis/min/g respectively, where the error given is one standard deviation based on the multiple determinations made of the standard solution concentrations. Later counting results obtained by the U.S. Environmental Protection Agency's Environmental Monitoring and Support Laboratory in Las Vegas, Nevada, confirmed these specific activities.

The first two reference materials were prepared from a 50-gallon (189-liter) water sample taken from the Great Miami River about 25 miles (40 kilometers) upstream from Mound Facility at Miamisburg, Ohio. Analysis of this water showed that the plutonium-238 and plutonium-239 concentrations were both less than 0.01 dis/min/liter, a factor of 100 to 1,000 times lower than the concentration to which they were later spiked. This

river water was filtered with Whatman GF/C paper to remove the suspended matter. The third reference material was substitute ocean water prepared according to a method recommended by the American Society for Testing and Materials (ASTM, 1976a).

River water or substitute ocean water samples of about 8 kilograms (kg) were weighed to within 1 gram in 2-gallon (7.6-liter) Nalgene aspirator bottles and transferred to a 30-gallon (114-liter) polyethylene drum liner to give a total of about 80 to 90 kg of water. A weighed amount of concentrated nitric acid, in the amount of 5 ml per liter of water, was then added to the water through one of the two screw cap tops on the drum liner, to yield an acid concentration of about 0.1 N after mixing. Weighed amounts of the plutonium-239 and plutonium-238 standard solutions were then added to the acidified water. Finally a few grams of saturated copper nitrate solution were added to the river water samples, and a few grams of saturated lithium chloride solution were added to the substitute ocean water sample. These metals served as a "tracer" to determine when complete mixing had occurred.

All three samples were mixed for 4 hours or longer using peristaltic pumps. Confirmation of complete mixing was obtained by atomic absorption analysis for copper or lithium in 2-ml samples taken approximately every 30 minutes. Copper and lithium salts were chosen since these metals have a very good sensitivity in atomic absorption analysis and only a small amount had to be added to the water samples. Copper could not be used with the substitute ocean water since it already contained a small amount of copper.

The plutonium-238 and plutonium-239 concentrations were computed based on what was added to each solution and these values are summarized in Table 1. The errors given represent an estimate of the total error involved in computing that concentration. The values in parentheses for Samples 1 through 3 are experimentally determined values which will be explained later in the report.

SINGLE-LABORATORY EVALUATION

As mentioned earlier, two procedures were chosen for laboratory evaluation. These procedures were used in analyzing on-site water samples at Mound Facility known to contain plutonium-238. The procedures were modified slightly in progressing from one sample to the next in an attempt to improve the recovery of the plutonium-242 tracer, and to simplify the procedure to make it as "cost effective" as possible. After several samples were

TABLE 1. REFERENCE SAMPLES FOR PLUTONIUM-IN-WATER COLLABORATIVE STUDY

Sample No.	Type Sample	Expected Pu-239 (dis/min/liter)[a]	Expected Pu-238 (dis/min/liter)[a]
1	River Water	31.6 ± 0.6 (31.6)[b]	10.7 ± 0.2 (10.7)
2	River Water	1.07 ± 0.02 (1.13)	9.60 ± 0.19 (8.47)
3	Substitute Ocean Water	4.44 ± 0.04 (4.22)	0.53 ± 0.01 (0.55)
4	River Sediment in Distilled Water	0.42 ± 0.04	0.02

[a]For Sample 4, the numbers represent the dis/min/sample.

[b]The numbers in parentheses are experimentally determined from collaborative study data and will be explained later.

analyzed, only one method was chosen for further evaluation. This method, a modification of the ferric hydroxide coprecipitation method, showed greater than 80% recovery of the plutonium and was a relatively simple laboratory procedure. The manganese dioxide coprecipitation procedure gave plutonium recoveries as good or even better, but it had the disadvantage of being more time consuming. Also, it was more difficult to use because of the pH control required, and it produced a poorly compacted precipitate compared to the ferric hydroxide precipitate.

In studying both of the above methods, the technique of using two tracers (Livingston et al., 1975b) was used in optimizing conditions for a satisfactory electrodeposition procedure. Procedures similar to a few recently published (Puphal and Olsen, 1972; Talvitie, 1972), were used in electroplating the plutonium for alpha pulse-height analysis. By adding plutonium-236 tracer just prior to the electrodeposition, it was possible to evaluate the electrodeposition efficiency in addition to the overall recovery efficiency of the entire analysis. It was found from these studies that electrodeposition of plutonium from 1 M ammonium sulfate which was initially

adjusted to a pH of about 2 gave electrodeposition recoveries of better than 90%. Samples were electroplated onto stainless steel slides at 1.2 amps at about 45°C for 1.5 to 2.0 hours. Again, other electrodeposition procedures may give recoveries just as good, but the present procedure proved to work well for a number of different samples.

The plutonium recovery efficiency of the ferric hydroxide coprecipitation procedure was further evaluated using substitute ocean water samples and 20-liter water samples. Plutonium-242 tracer recoveries from these samples were still much greater than 50%. To make the procedure applicable to water samples containing sediment, an acid dissolution step similar to a dissolution used in soil analysis (Peters, 1975; USAEC, 1974) was added to the procedure to analyze such samples.

In order to determine the effectiveness of the chemical separation, isotopic tracers of uranium, americium, thorium, and polonium were used in evaluating the procedure for effective chemical separation of the plutonium from these elements. The isotopes used for these tracer studies and their alpha energies are given in Table 2. All the plutonium isotopes of interest in this study and their alpha energies are also given in Table 2. Americium-241 is also given in Table 2 to show that this isotope must be removed to determine plutonium-238 in a sample, since the alpha peaks of these two isotopes cannot be resolved by alpha pulse-height analysis. When each of the four tracers (thorium actually consisted of a mixture of thorium-228 and thorium-229) was added to samples which were analyzed for plutonium, using the proposed coprecipitation-ion exchange procedure, it was found that no detectable amount of tracer came through and thus there was no interference in determining the plutonium isotopes. This is consistent with what would have been expected based on the ion exchange behavior of these elements (Korkisch, 1969). No quantitative data on ion exchange distribution coefficients were obtained since such data already exist for the pure elements (Korkisch, 1969), and are likely to be slightly different for different environmental samples.

Plutonium determinations of the four samples that were sent to the laboratories participating in the collaborative study were also carried out at Mound Facility. The results of these analyses are summarized in Tables 3 through 6. The date that the analysis was performed is given in these tables because it is believed that the plutonium concentrations in Samples 1 and 2 are decreasing with time. This phenomenon will be discussed at greater length later in the report. The reason for the selected averages given in Tables 3 and 4 will be explained later. The average plutonium recovery observed for multiple analyses of all four samples was 86 ± 10%. This plutonium recovery is about the same as that reported in a single-laboratory evaluation of a

plutonium in soil method (Hahn et al., 1977) where the recovery was 88 ± 7%.

Mound Facility had observed a plutonium-238 blank as high as 0.2 dis/min/liter during the present study. For this reason no plutonium-238 concentrations are reported for Sample 4. Even the plutonium-238 concentrations given for Sample 3 may be slightly high since no blank was subtracted.

TABLE 2. ALPHA ENERGIES OF ISOTOPES OF INTEREST IN THE PLUTONIUM-IN-WATER STUDY

Isotope	Alpha Energy in MeV (Abundance)
Pu-236	5.77 (69%), 5.72 (31%)
Pu-238	5.50 (72%), 5.46 (28%)
Am-241	5.49 (85%), 5.44 (13%)
Th-228[a]	5.43 (71%), 5.34 (28%)
Po-210	5.31 (100%)
Am-243	5.28 (87%), 5.23 (11.5%)
Pu-239	5.16 (88%), 5.11 (11%)
Pu-240	5.17 (76%), 5.12 (24%)
Pu-242	4.90 (76%), 4.86 (24%)
Th-229	5.05 (7%), 4.97 (10%), 4.90 (11%), 4.84 (58%) 4.81 (11%)
U-236	4.49 (76%), 4.44 (24%)

[a]Underlined isotopes are those used as tracers to evaluate the effectiveness of the chemical separation.

TABLE 3. SINGLE-LABORATORY EVALUATION CONCENTRATIONS AND RECOVERIES FOR SAMPLE 1 (River Water)

Sample Number	Date Analyzed	Pu-239 (dis/min/liter)	Pu-238 (dis/min/liter)	Pu Recovery (%)
1 C	09-30-76	29.35 ± 0.62[a]	9.72 ± 0.24	65
1 G	10-28-76	29.74 ± 0.71	10.44 ± 0.29	84
1 H	10-28-76	29.96 ± 0.31	11.04 ± 0.14	92
1 I	11-22-76	28.37 ± 0.23	9.47 ± 0.09	89
1 J	11-22-76	28.24 ± 0.25	9.35 ± 0.10	105
1 K	11-22-76	27.95 ± 0.25	9.42 ± 0.11	65
1 P	02-15-77	24.10 ± 0.38	8.06 ± 0.16	84
1 R	02-23-77	22.99 ± 0.29	7.78 ± 0.12	92
1 U	08-29-77	22.55 ± 0.56	7.68 ± 0.24	71
1 V	08-29-77	21.34 ± 0.62	7.15 ± 0.26	71
Avg of Oct/Nov 1976 Results		28.85 ± 0.93[b]	9.94 ± 0.76	87 ± 15

[a]This error is the one sigma counting statistics error.

[b]This is the standard deviation of the plutonium concentrations used to compute the average.

TABLE 4. SINGLE-LABORATORY EVALUATION CONCENTRATIONS AND RECOVERIES FOR SAMPLE 2 (River Water)

Sample Number	Date Analyzed	Pu-239 (dis/min/liter)	Pu-238 (dis/min/liter)	Pu Recovery (%)
2 A	11-09-76	1.031 ± 0.072	7.91 ± 0.25	71
2 B	11-09-76	0.953 ± 0.061	7.65 ± 0.21	86
2 C	11-09-76	0.937 ± 0.061	7.92 ± 0.22	85
2-1	11-29-76	0.966 ± 0.032	7.29 ± 0.11	93
2-2	11-29-76	0.992 ± 0.035	7.30 ± 0.12	81
2-3	11-29-76	0.893 ± 0.029	7.32 ± 0.11	95
2-4	11-29-76	0.989 ± 0.036	7.21 ± 0.12	77
2 D	02-15-77	0.909 ± 0.039	6.98 ± 0.14	84
2 E	02-15-77	0.825 ± 0.038	7.29 ± 0.15	84
Avg of first seven values		0.966 ± 0.044	7.51 ± 0.31	84 ± 9

TABLE 5. SINGLE-LABORATORY EVALUATION CONCENTRATIONS AND RECOVERIES FOR SAMPLE 3 (Substitute Ocean Water)

Sample Number	Date Analyzed	Pu-239 (dis/min/liter)	Pu-238 (dis/min/liter)	Pu Recovery (%)
3 A	11-15-76	4.25 ± 0.07	0.533 ± 0.022	85
3 B	11-15-76	4.25 ± 0.07	0.583 ± 0.023	95
3 C	11-15-76	4.09 ± 0.07	0.548 ± 0.022	92
3 D	02-23-77	4.35 ± 0.08	0.622 ± 0.026	88
3 E	02-23-77	4.40 ± 0.08	0.536 ± 0.024	84
3 G	04-28-77	4.17 ± 0.15	---	72
3 H	04-28-77	4.49 ± 0.14	0.560 ± 0.041	82
3 I	04-28-77	4.22 ± 0.11	0.581 ± 0.034	89
Avg of all values		4.28 ± 0.13	0.566 ± 0.032	86 ± 7

TABLE 6. SINGLE-LABORATORY EVALUATION CONCENTRATIONS AND RECOVERIES FOR SAMPLE 4 (Sample Containing Sediment)

Sample Number	Date Analyzed	Pu-239 (dis/min/sample)	Pu-238 (dis/min/sample)	Pu Recovery (%)
4 A	11-08-76	1.409 ± 0.019[a]	--[b]	73
4 B	11-08-76	0.433 ± 0.011	--	86
4 C	12-09-76	0.430 ± 0.009	--	93
4 D	12-09-76	0.448 ± 0.011	--	94
Avg of B,C,D		0.437 ± 0.010	--	91 ± 4

[a]Reject, ASTM test.

[b]No plutonium-238 concentrations were determined for Sample 4 because of blank problems.

INTERLABORATORY COLLABORATIVE STUDY

Duplicate 1-liter portions of Samples 1, 2, 3 and 4 were sent to 23 laboratories that had previously indicated an interest in participating in the plutonium-in-water collaborative study. In addition to the procedure to be used (cf. Appendix 1) each laboratory was also sent specific collaborative study instructions (cf. Appendix 2). Each participating laboratory was also sent the same standard plutonium-242 tracer to use in analyzing the water samples.

The standard tracer, labeled MD-2, consisted of NBS SRM 4334 Plutonium-242 Alpha Particle Solution Standard accurately diluted with 5M nitric acid by a mass dilution. The activity of the undiluted solution was 21.41 ± 1.0% nuclear transitions per second per gram as stated by the National Bureau of Standards. This activity was used to calculate the activity of the diluted tracer which was found to be 77.0 dis/min/g or 89.6 dis/min/ml. The error in this value is also believed to be about 1.0% since negligible errors were introduced in the mass dilution. The 77.0 dis/min/g plutonium-242 tracer was checked by the EPA in Las Vegas and by ERDA's Environmental Measurements Laboratory; their values agreed within experimental error to the value computed from the dilution. A copy of the "Data on Plutonium-242 Tracer" that was sent to each participating laboratory with the tracer is given in Appendix 4.

A list of the 18 laboratories that completed the plutonium-in-water collaborative study is given in Appendix 5. Each laboratory that submitted results was randomly assigned a laboratory number. Before evaluating any of the results it was agreed upon by the authors and by the EPA Environmental Monitoring and Support Laboratory in Las Vegas that any result having a tracer recovery of less than 20% would be considered unacceptable. The 20% recovery value is an arbitrarily selected number, but it was believed that some value should be chosen such that if the recovery was below this number, there was probably something seriously wrong with that particular analysis, and the results should be considered questionable.

Plutonium-242 tracer recoveries from laboratories 2, 4, and 18 averaged 5.8%, 3.2%, and 14% respectively, so consequently these data were considered unacceptable. Although one recovery reported by laboratory 18 was 22.5%, the data for that particular analysis were also rejected as an outlier on the basis of

a statistical test described later. The data submitted by these laboratories are given in Appendix 6 as a "Table of Rejected Results." This table also includes the results from laboratory 6. Reported plutonium-242 recoveries from this laboratory averaged 67%; however, there were computational errors in the data as submitted. Also, from the total number of counts submitted it was clear that the samples were not counted for the required 1,000 minutes.

Acceptable results are reported according to isotope and sample number in Tables 7 through 14. In these tables an asterisk (*) in column 2 beside the plutonium concentration indicates that this value is rejected because of a chemical recovery of less than 20%. A cross (†) beside the plutonium concentration indicates that this value is rejected as an outlier on the basis of an ASTM recommended criterion for rejection (ASTM, 1976b).

For this rejection criterion, with n observations listed in order of increasing magnitude by $x_1 \leq x_2 \leq x_3 \leq \ldots \leq x_n$, if the largest value x_n is in question, then T_n is calculated as follows:

$$T_n = (x_n - \bar{x})/s \qquad (1)$$

where:

T_n = test criterion

$\bar{x}$ = arithmetic average of all n values

s = the estimate of the population standard deviation based on the sample data

Alternately if x_1 rather than x_n is the doubtful value, the criterion is as follows:

$$T_1 = (\bar{x} - x_1)/s \qquad (2)$$

If the T_n or T_1 value exceeds the critical value then the measurement in question may be rejected. Critical values of T for various levels of significance are given in the ASTM reference (ASTM, 1976b). A 5% two-sided level of significance was employed in deciding whether or not to reject a given measurement in the present study.

The average of the duplicate values is given in column 3, and the estimated standard deviation is given in column 4. The ratio of the average value to the reference value for each laboratory is given in the fifth column. The reference values used for Samples 3 and 4 are the expected plutonium-239 and

TABLE 7. COLLABORATIVE STUDY PLUTONIUM-239 RESULTS FOR SAMPLE 1 (River Water - Reference Concn = 28.9 dis/min/liter)

Lab	Pu-239[a] (dis/min/liter)	Avg Concn (dis/min/liter)	Std Deviation (dis/min/liter)	Ratio Avg to Reference	Pu Recovery (%)
1	26.9 ± 0.9 28.2 ± 0.9	27.5	0.9	0.95	62 78
3	28.0 ± 0.6 25.9 ± 0.5	27.0	1.4	0.94	60 64
5	21.0 ± 0.6 20.9 ± 1.0	21.0	0.1	0.73	31 33
7	26.8 ± 1.4 27.7 ± 1.0	27.2	0.6	0.94	30 56
8	28.0 ± 0.7 31.3 ± 1.0	29.6	2.3	1.03	84 51
9	27.9 ± 0.7 28.7 ± 0.8	28.3	0.6	0.98	79 70
10	30.7 ± 1.1 34.3 ± 1.3	32.5	2.6	1.13	62 55
11	23.9 ± 0.6 25.8 ± 0.6	24.9	1.4	0.86	81 82
12	22.7 ± 0.7 23.0 ± 1.6	22.9	0.2	0.79	86 95
13	24.3 ± 1.0 24.4 ± 0.7	24.4	0.1	0.85	57 36
14	30.5 ± 0.7 29.4 ± 0.7	30.0	0.8	1.04	92 90
15	30.6 ± 0.9 28.9 ± 0.6	29.8	1.2	1.03	63 83
16	24.5 ± 0.7 23.5 ± 0.7	24.0	0.7	0.83	96 90
17	25.7 ± 0.4 24.1 ± 0.6*	-[b]	-	0.89	29 12

[a]The error given here is the error associated with one sigma counting statistics. This statement also applies to Tables 8 through 14.

[b]When only one plutonium concentration was determined, or if one value was rejected, no average or standard deviation is tabulated. This statement also applies to Tables 8 through 14.

*Reject, yield <20%.

TABLE 8. COLLABORATIVE STUDY PLUTONIUM-238 RESULTS FOR SAMPLE 1 (River Water - Reference Concn = 9.94 dis/min/liter)

Lab	Pu-238 (dis/min/liter)	Avg Concn (dis/min/liter)	Std Deviation (dis/min/liter)	Ratio Avg to Reference	Pu Recovery (%)
1	9.15 ± 0.38	9.20	0.07	0.93	62
	9.25 ± 0.35				78
3	8.92 ± 0.23	8.77	0.22	0.88	60
	8.61 ± 0.21				64
5	6.72 ± 0.29	6.78	0.08	0.68	31
	6.84 ± 0.53				33
7	9.07 ± 0.56	8.85	0.32	0.89	30
	8.62 ± 0.39				56
8	8.94 ± 0.29	9.73	1.12	0.98	84
	10.5 ± 0.4				51
9	8.92 ± 0.28	10.1	1.7	1.02	79
	11.31 ± 0.37				70
10	10.97 ± 0.47	-	-	1.10	62
	14.56 ± 0.63†				55
11	7.57 ± 0.23	8.07	0 70	0.81	81
	8.56 ± 0.25				82
12	7.57 ± 0.33	7.45	0.18	0.75	86
	7.32 ± 0.64				95
13	8.95 ± 0.45	8.74	0.30	0.88	57
	8.53 ± 0.28				36
14	10.3 ± 0.3	10.1	0.36	1.02	92
	9.81 ± 0.28				90
15	10.9 ± 0.4	10.2	0.95	1.03	63
	9.54 ± 0.22				83
16	7.83 ± 0.30	7.83	0.01	0.79	96
	7.82 ± 0.29				90
17	8.64 ± 0.17	-		0.87	29
	7.65 ± 0.25*				12

†Reject, ASTM test

*Reject, yield <20%

TABLE 9. COLLABORATIVE STUDY PLUTONIUM-239 RESULTS FOR SAMPLE 2 (River Water - Reference Concn = 0.966 dis/min/liter)

Lab	Pu-239 (dis/min/liter)	Avg Concn (dis/min/liter)	Std Deviation (dis/min/liter)	Ratio Avg to Reference	Pu Recovery (%)
1	0.93 ± 0.08 1.03 ± 0.09	0.98	0.07	1.01	69 72
3	1.05 ± 0.07 0.92 ± 0.06	0.99	0.09	1.02	45 40
7	1.22 ± 0.12 0.84 ± 0.18*	-		1.26	50 16
8	0.79 ± 0.06 0.83 ± 0.06	0.81	0.03	0.84	102 95
9	1.12 ± 0.10 1.02 ± 0.07	1.07	0.07	1.11	65 79
10	1.17 ± 0.11 0.98 ± 0.10	1.08	0.13	1.12	62 62
11	0.83 ± 0.06 0.99 ± 0.08	0.91	0.11	0.94	72 70
12	0.85 ± 0.08 0.68 ± 0.10	0.77	0.12	0.80	69 53
13	0.94 ± 0.09 0.86 ± 0.11	0.90	0.06	0.93	91 53
14	1.13 ± 0.007 0.93 ± 0.06	1.03	0.14	1.07	94 96
15	1.00 ± 0.06 0.93 ± 0.06	0.97	0.05	1.00	80 79
16	0.82 ± 0.07 0.92 ± 0.08	0.87	0.07	0.90	98 76
17	0.87 ± 0.03 0.83 ± 0.03	0.85	0.03	0.88	68 70

*Reject, yield <20%

Laboratory 5 did not provide results for this sample

TABLE 10. COLLABORATIVE STUDY PLUTONIUM-238 RESULTS FOR SAMPLE 2 (River Water - Reference Concn = 7.51 dis/min/liter)

Lab	Pu-238 (dis/min/liter)	Avg Concn (dis/min/liter)	Std Deviation (dis/min/liter)	Ratio Avg to Reference	Pu Recovery (%)
1	7.90 ± 0.31	8.24	0.48	1.10	69
	8.58 ± 0.32				72
3	8.42 ± 0.25	7.77	0.93	1.03	45
	7.11 ± 0.23				40
7	8.29 ± 0.40	-	-	1.10	50
	7.70 ± 0.69*				16
8	7.59 ± 0.23	7.61	0.03	1.01	102
	7.63 ± 0.25				95
9	8.59 ± 0.36	8.39	0.29	1.12	65
	8.18 ± 0.27				79
10	8.21 ± 0.38	8.17	0.06	1.09	62
	8.12 ± 0.38				62
11	7.69 ± 0.23	7.74	0.06	1.03	72
	7.78 ± 0.29				70
12	7.10 ± 0.28	6.88	0.32	0.92	69
	6.65 ± 0.38				53
13	7.80 ± 0.33	7.35	0.64	0.98	91
	6.90 ± 0.40				53
14	8.33 ± 0.25	8.25	0.12	1.10	94
	8.16 ± 0.24				96
15	7.50 ± 0.22	7.55	0.06	1.01	80
	7.59 ± 0.23				79
16	7.63 ± 0.29	7.62	0.01	1.01	98
	7.61 ± 0.31				76
17	7.22 ± 0.10	7.24	0.02	0.96	68
	7.25 ± 0.10				70

*Reject, yield <20%

Laboratory 5 did not provide results for this sample

TABLE 11. COLLABORATIVE STUDY PLUTONIUM-239 RESULTS FOR SAMPLE 3 (Substitute Ocean Water - Reference Concn = 4.44 dis/min/liter)

Lab	Pu-239 (dis/min/liter)	Avg Concn (dis/min/liter)	Std Deviation (dis/min/liter)	Ratio Avg to Reference	Pu Recovery (%)
1	4.40 ± 0.20	4.44	0.06	1.00	80
	4.48 ± 0.18				93
3	4.33 ± 0.16	4.11	0.31	0.93	38
	3.89 ± 0.16				34
5	5.31 ± 0.33†				35
	6.9 ± 1.8*				2
7	4.08 ± 0.22	4.01	0.10	0.90	61
	3.94 ± 0.21				69
8	3.7 ± 0.5*			0.84	8
	3.73 ± 0.10				92
9	4.45 ± 0.17	4.41	0.06	0.99	81
	4.37 ± 0.22				48
10	4.04 ± 0.19	4.18	0.20	0.94	90
	4.32 ± 0.20				89
11	4.17 ± 0.16	4.14	0.04	0.93	92
	4.11 ± 0.17				83
12	3.76 ± 0.22	4.03	0.37	0.91	80
	4.29 ± 0.39				77
13	4.10 ± 0.22	3.85	0.35	0.87	90
	3.60 ± 0.25				60
14	4.22 ± 0.17	-		0.95	94
15	4.35 ± 0.11	4.36	0.01	0.98	62
	4.37 ± 0.09				104
16	4.18 ± 0.24	4.08	0.14	0.92	61
	3.98 ± 0.20				78
17	4.55 ± 0.08	4.35	0.28	0.98	54
	4.15 ± 0.06				80

†Reject, ASTM test

*Reject, yield <20%

TABLE 12. COLLABORATIVE STUDY PLUTONIUM-238 RESULTS FOR SAMPLE 3 (Substitute Ocean Water - Reference Concn = 0.53 dis/min/liter)

Lab	Pu-238 (dis/min/liter)	Avg Concn (dis/min/liter)	Std Deviation (dis/min/liter)	Ratio Avg to Reference	Pu Recovery (%)
1	0.41 ± 0.05	0.46	0.07	0.87	80
	0.51 ± 0.05				93
3	0.45 ± 0.05	0 44	0.02	0.83	38
	0.42 ± 0.05				34
5	0.41 ± 0.08	-		0.77	35
	2.4 ± 0.9*				2
7	0.52 ± 0.07	0.58	0.08	1.09	61
	0.64 ± 0.03				69
8	0.2 ± 0.1*	-		1.02	8
	0.54 ± 0.03				92
9	0.58 ± 0.05	0.62	0.05	1.17	81
	0.65 ± 0.07				48
10	0.48 ± 0.06	0.50	0.02	0.94	90
	0.51 ± 0.06				89
11	0.64 ± 0.05	0.56	0.11	1.06	92
	0.48 ± 0.05				83
12	0.54 ± 0.08	0 46	0.11	0.87	80
	0.38 ± 0.11				77
13	0.45 ± 0.06	0.52	0.09	0.98	90
	0.58 ± 0.09				60
14	0.55 ± 0.05	-		1.04	94
15	0.47 ± 0.03	0.49	0.03	0.92	62
	0.51 ± 0.03				104
16	0.51 ± 0.007	0.46	0.07	0.87	61
	0.41 ± 0.05				78
17	0.54 ± 0.02	0.50	0.06	0.94	54
	0.46 ± 0.02				80

*Reject, yield <20%

TABLE 13. COLLABORATIVE STUDY PLUTONIUM-239 RESULTS FOR SAMPLE 4 (Sample Containing Sediment - Reference Value = 0.42 dis/min)

Lab	Pu-239 (dis/min)	Avg Value (dis/min)	Std Deviation (dis/min)	Ratio Avg to Reference	Pu Recovery (%)
1	1.04 ± 0.08†	-		1.29	93
	0.54 ± 0.05				91
3	0.41 ± 0.05	0.44	0.04	1.05	38
	0.47 ± 0.04				34
7	0.36 ± 0.06	0.38	0.03	0.90	50
	0.40 ± 0.05				61
8	0.36 ± 0.03	0.43	0.09	1.02	64
	0.49 ± 0.05				74
10	0.42 ± 0.06	0.42	0.00	1.00	75
	0.42 ± 0.06				65
11	0.41 ± 0.06	0.42	0.03	1.00	38
	0.44 ± 0.06				54
12	0.37 ± 0.05	-	-	0.88	72
13	0.36 ± 0.09	0.35	0.02	0.83	28
	0.33 ± 0.06				66
14	0.41 ± 0.05	0.42	0.01	1.00	86
	0.43 ± 0.05				72
15	0.67 ± 0.04†	-	-	-	61
	0.75 ± 0.04†				83
16	0.40 ± 0.05	0.42	0.03	1.00	93
	0.44 ± 0.05				83
17	0.49 ± 0.02	-	-	1.17	87
	0.34 ± 0.04*				14

†Reject, ASTM test

*Reject, yield <20%

Laboratories 5 and 9 did not provide results for this sample

TABLE 14. COLLABORATIVE STUDY PLUTONIUM-238 RESULTS FOR SAMPLE 4 (Sample Containing Sediment - Reference Value = 0.02 dis/min)

Lab	Pu-238 (dis/min)	Avg Value (dis/min)	Std Deviation (dis/min)	Ratio Avg to Reference	Pu Recovery (%)
1	0.005 ± 0.010 0.021 ± 0.027	0.01	0.01	0.5	93 91
3	0.13 ± 0.03		-	6.5	38
7	0.12 ± 0.04 0.25 ± 0.05	0 19	0.09	9.5	50 61
8	0.02 ± 0.01 0.02 ± 0.01	0.02	0.00	1.0	64 74
10	0.06 ± 0.02 0.12 ± 0.03	0.09	0.04	4.5	75 65
11	0.09 ± 0.03 0.07 ± 0.02	0.08	0.02	4.0	38 54
12	0.03 ± 0.01		-	1.5	72
13	0.17 ± 0.06 0.39 ± 0.06	0.28	0.16	14	28 66
14	0.04 ± 0.01 0.04 ± 0.01	0.04	0.00	2.0	86 72
15	0.20 ± 0.02 0.04 ± 0.01	0.12	0.11	6.0	61 83
16	0.07 ± 0.02 0.09 ± 0.02	0.08	0.01	4.0	93 83
17	0.14 ± 0.01 0.16 ± 0.02*		-	6.8	87 14

*Reject, yield <20%

Laboratories 5 and 9 did not provide results for this sample

plutonium-238 concentrations based on what was added (cf. Table 1). The reference values used for Sample 1 are the averages of the second through the sixth values determined at Mound Facility (cf. Table 3). For Sample 2 the average of the first seven values determined at Mound was used as the reference. As stated earlier the single-laboratory evaluation showed that the plutonium concentrations in Samples 1 and 2 had decreased with time. Only values determined during the time span that collaborative laboratories made their determinations were used in obtaining a reference value. Finally, the last column gives the plutonium recovery based upon the amount of plutonium-242 tracer used in the analysis.

A summary of the data for each sample and each isotope is given in Table 15. The first row gives the average plutonium concentration as determined from the laboratory averages taken from Tables 7 through 14. When a laboratory had made only one determination or when one of the duplicates had been rejected, the one acceptable value was used in computing the overall laboratory average given in Table 15. The estimated standard deviation, S_d, was also calculated from the laboratory averages. These values are given in the second row of Table 15. Also the relative standard deviation in percent is given in parentheses under the standard deviations in row two and in other rows where a standard deviation is listed.

Two other standard deviations are also given in Table 15. These are the precision standard deviation, or the combined within-laboratory standard deviation, S_r, and the standard deviation of the systematic errors or the precision of the method between laboratories, S_b. The first of these values is estimated according to Youden's Formula (3) (Youden and Steiner, 1975) as follows for duplicate determinations:

$$S_r = (\Sigma d^2/2n)^{\frac{1}{2}} \qquad (3)$$

where:

d = the absolute difference between the duplicates

n = the number of collaborating laboratories reporting duplicates

The standard deviation of the systematic errors, S_b is computed from the other two standard deviations according to Youden's Formula (4) (Youden and Steiner, 1975):

$$S_b^2 = S_d^2 - S_r^2/2 \qquad (4)$$

TABLE 15. SUMMARY OF PLUTONIUM-IN-WATER COLLABORATIVE STUDY RESULTS

Quantity Tabulated	Plutonium Concentrations or Error dis/min/liter (dis/min for Sample 4)							
	Sample 1		Sample 2		Sample 3		Sample 4	
	Pu-239	Pu-238	Pu-239	Pu-238	Pu-239	Pu-238	Pu-239	Pu-238
Avg Pu Concn (14 labs)	26.8	8.96	0.96	7.78	4.15	0.51	0.42	0.10
S_d (%)	±3.2 (12%)	±1.18 (13%)	±0.12 (13%)	±0.47 (6.0%)	±0.21 (5.1%)	±0.059 (12%)	±0.053 (12%)	±0.08 (77%)
S_r (%)	1.2 (4.6%)	0.70 (7.9%)	0.09 (9.6%)	0.38 (4.9%)	0.22 (5.2%)	0.073 (14%)	0.040 (9.8%)	0.07 (72%)
S_b (%)	3.1 (12%)	1.07 (12%)	0.10 (10%)	0.39 (5.0%)	0.14 (3.4%)	0.028 (5.5%)	0.045 (11%)	0.06 (62%)
Reference Value	28.9	9.94	0.966	7.51	4.40	0.53	0.42	0.02
Estimated Error (%)	±0.9 (3.1%)	±0.76 (7.6%)	±0.044 (4.6%)	±0.31 (4.1%)	±0.09 (2%)	±0.01 (2%)	±0.036 (8.5%)	- -
% Difference	-7.1%	-9.9%	-1.09%	+3.6%	-5.7%	-4.8%	0%	+400%
Avg Pu Recovery	66 ± 21%		72 ± 17%		75 ± 19%		65 ± 20%	

S_d = standard deviation of the laboratory averages.

S_r = precision standard deviation, or combined within laboratory standard deviation.

S_b = standard deviation of the systematic errors, or precision of the method between laboratories.

% Difference = percent difference between the reference value and the average of the 14 laboratories.

Also given in Table 15 are the reference values described previously. The absolute estimated errors of these reference values and these values expressed as a percent are also given. The estimated errors given for Samples 1 and 2 are the standard deviations estimated from the multiple determinations used to compute the average. For Sample 3, the errors represent an estimate of the total uncertainty based on measurements of the amount of plutonium-239 and plutonium-238 added to the sample. For the plutonium-239 in Sample 4 the error given is the total uncertainty of the plutonium-239 content of the NBS River Sediment, since in preparing the collaborative test samples no significant additional errors should have been introduced. The "% difference" given in Table 15 is the percent difference between the reference value and the average reported value. Finally, the average plutonium recovery observed for a given sample for all of the laboratories, together with the standard deviation of these recoveries, is given in the last row of Table 15.

After results of the collaborative study had been submitted, a questionnaire was sent to each participant. Specific questions about certain problem areas and general questions about the plutonium-in-water procedure were asked. A summary of the responses to the questions that could be answered by a "yes" or "no", or by a specific number is given with the questionnaire in Appendix 3. Only the 14 laboratories whose data were evaluated in this report are included in the summary.

Considering the responses to the general questions that were asked (Numbers 5 through 9), 9 of the 14 laboratories reported that they did not deviate considerably from any part of the procedures. Two laboratories responded with a definite "yes" that they did deviate from the procedure, and three others indicated that some changes were made. It is our judgment, however, that only one of these five laboratories "deviated considerably" from the procedure being studied. That laboratory, number 7, used an ammonium oxalate procedure for electrodeposition rather than the ammonium sulfate procedure that was called for. Previous experience at Mound Facility has indicated that an ammonium sulfate procedure generally gives better yields than an ammonium oxalate procedure. It was observed that laboratory 7 had an average plutonium recovery of 54 ± 12% (even after rejecting one determination with a yield of 16%) compared to the 14-laboratory average of 69 ± 20%.

The questionnaire also asked for good and bad points of the procedure as well as general comments. The significant good points given were as follows:

1. The procedure was well written and easy to follow.

2. The procedure was straightforward, simple, and very workable.

3. It brought together many good techniques into one procedure.

4. It is a good procedure for large volume water samples.

5. The use of the preadjusted electrolyte for electrodeposition is a good point; generally excellent slides are produced.

6. High plutonium recoveries are generally obtained.

Significant bad points given by the participants were as follows:

1. It would be preferable to routinely treat the initial hydroxide precipitate with nitric and hydrofluoric acids to ensure complete dissolution and the equilibration of the tracer with the sample activity.

2. The procedure should not be applied to water samples containing sediment, but rather the sediment should be separated and analyzed by a plutonium-in-soil procedure.

3. The treatment of samples containing sediment required considerable time and left much of the sample still undissolved.

4. The ion exchange separation was too time consuming.

5. Some gassing occurred during the transition of the resin from the nitrate form to the chloride form possibly incurring some losses due to channeling.

6. Some samples went to dryness when evaporating the sample effluent prior to electrodeposition and it was difficult to redissolve such samples. It was recommended that the sodium bisulfate and sulfuric acid be added before these steps.

7. The thymol blue end point was difficult to observe.

In spite of the fact that an approximately equal number of good and bad points about the procedure were received, 9 of the 14 laboratories believed that the method being evaluated would be a good reference method for plutonium in water. Only one laboratory responded with a definite no. This laboratory submitted five bad points about the procedure although only two of the bad points were considered valid for inclusion in

the above list. These were items 3 and 4 in that list. The other three bad points that this laboratory listed were as follows: there is no equilibration of plutonium; iron is used to carry the plutonium, so the plates are dirty and unusable for mass spectrometric analysis if ever desired; there were problems plating the samples because the plating solution boiled away. The first comment is not considered valid since in the procedure the sample is acidified, plutonium-242 tracer is added, and the sample is mixed and heated for at least an hour. The answer to the second comment is that although iron is added as a carrier, it is later chemically separated from the plutonium on the ion exchange column. Finally the last problem can be eliminated by cooling the electrodeposition cell.

Of the four remaining laboratories, one considered the method for plutonium in water to be adequate while another wanted to see the results of the collaborative test before forming an opinion. A third laboratory did not believe that the method was a good reference method for samples containing suspended matter. And finally one laboratory had reservations about the effectiveness of the ferric hydroxide precipitation step of the procedure.

In response to question 9 on the questionnaire, several general comments on the procedure were made. Most of these comments are definitely worth mentioning and are as follows in the order in which they would apply to the procedure:

1. Some of the activity could have adhered to the walls of the cubitainer due to hydrolysis, and an acid rinse of this container would be in order.

2. The use of plutonium-236 tracer is advisable when determining relatively large amounts of plutonium-239.

3. To be consistent the iron carrier should be added as a nitrate rather than as a chloride.

4. Platinum ware could be used in place of Teflon in the acid dissolution.

5. It is suggested that the sediment be heated to fumes of perchloric acid in a covered Teflon beaker, with hydrochloric, nitric, and hydrofluoric acids added as needed. Any excess perchloric acid is then evaporated and if the small amount of perchlorate ion would not interfere in the subsequent column work, the residue in the Teflon beaker could be dissolved in hydrochloric acid and passed through the column as called for in the procedure.

6. Whatman #2 filter paper was used in place of the Whatman GF/A glass fiber filter in filtering any dissolved sediment before beginning the ion exchange.

7. After the plutonium is placed on the column and rinsed with 8M nitric acid, conversion of the column to the chloride form with 9-10 M hydrochloric acid may decrease the reaction rate between the two acids thereby decreasing the amount of gas formed.

8. In the first step of the electrodeposition, is all the sulfuric acid necessary or could the 5% sodium bisulfate monohydrate be prepared in 1M sulfuric acid?

DISCUSSION OF RESULTS

When the first Mound Facility analyses of Samples 1, 2, and 3 were performed, it could be seen that all the measured plutonium concentrations were lower by about 10% on the average than the expected plutonium concentrations (cf. Table 1 and Tables 3 through 5). No immediate explanation could be given, but when some of the first collaborative study results were received, it was observed that these results were also lower than the concentrations expected from what was added to the samples. Also when additional determinations were made at a later date at Mound Facility, plutonium concentrations were even lower than the previously determined values for Samples 1 and 2.

To determine whether or not some systematic error existed in the collaborative study data, the "two-sample chart" technique (Youden and Steiner, 1975) was used. Each sample used in the collaborative study contained two isotopes, plutonium-239 and plutonium-238; thus by plotting the plutonium-239 concentration against the plutonium-238 concentration for each laboratory, a chart analogous to the two-sample chart is obtained. This was done for the first three samples and the charts are illustrated in Figures 1 through 3. A chart was not prepared for Sample 4 since it had already been noted that there was what was believed to be a serious blank problem in measuring the very low plutonium-238 concentration in this

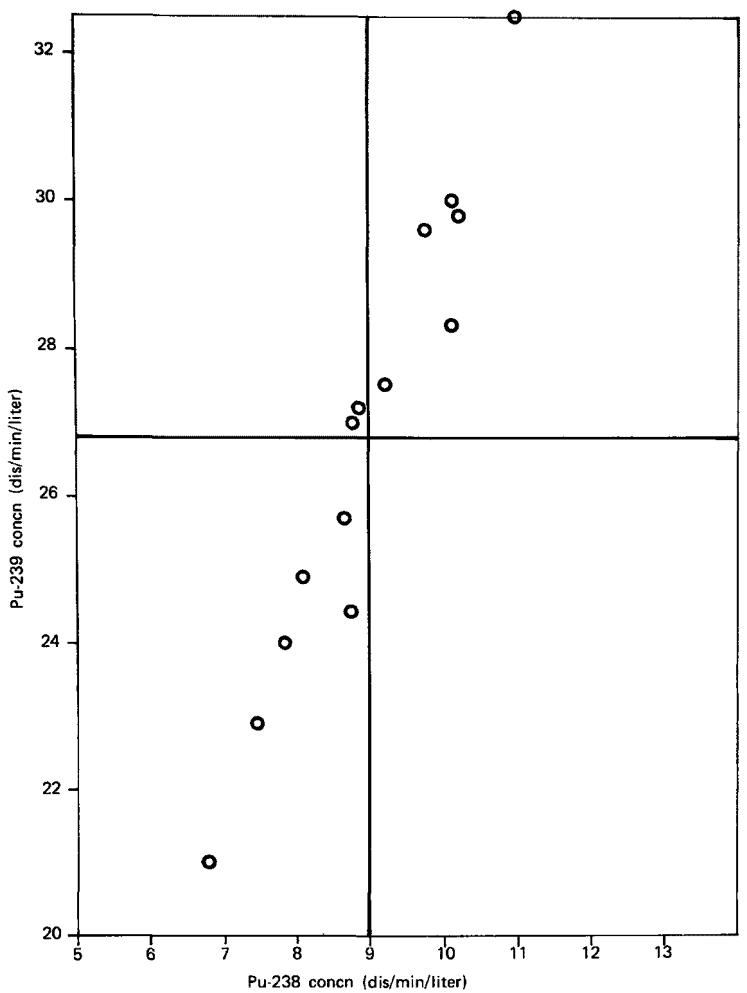

Figure 1. Sample 1 plutonium concentrations measured in collaborative study.

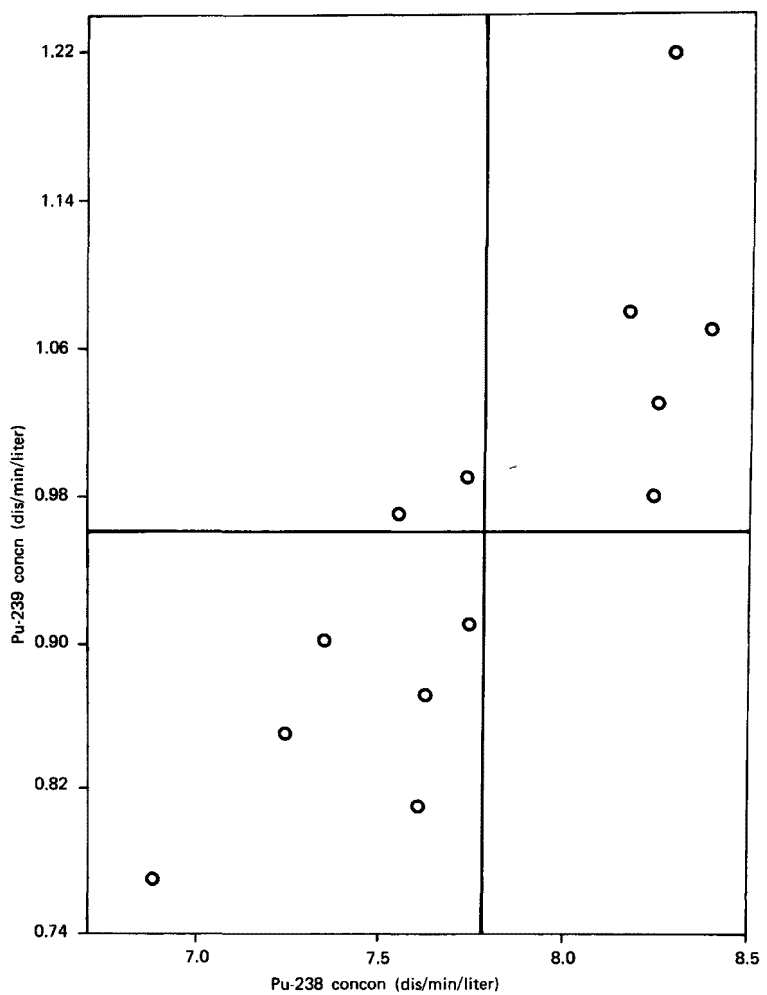

Figure 2. Sample 2 plutonium concentrations measured in collaborative study.

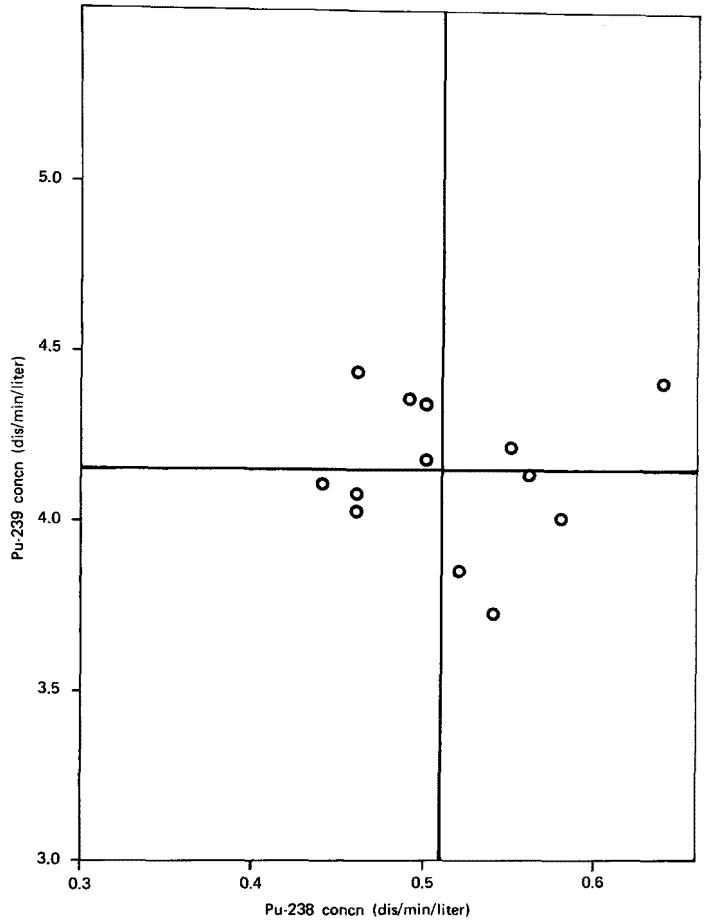

Figure 3. Sample 3 plutonium concentrations measured in collaborative study.

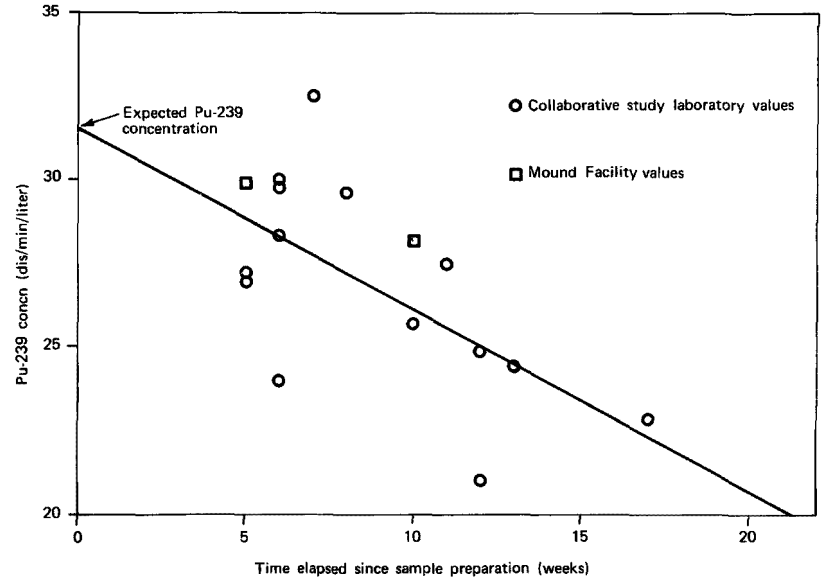

Figure 4. Least squares fit to Sample 1 plutonium-239 concentrations vs. time.

sample. On the charts, a vertical line is drawn through the average of the plutonium-238 concentrations and a horizontal line is drawn through the average of the plutonium-239 concentrations. This divides each chart into four quadrants, and if random errors are responsible for the scatter, the points corresponding to the laboratories should be divided equally among the four quadrants. In Figure 3, which corresponds to Sample 3, this seems to be true. For Samples 1 and 2, however, all but two of the points are found in the upper right or lower left quadrant. This indicates that if a laboratory gets a high (compared to the average) plutonium-239 concentration in the water, the plutonium-238 concentration is also likely to be high. The fact that the errors are random in Sample 3, yet not in Samples 1 and 2, suggests that the systematic error may be due to the samples rather than the laboratories.

A logical explanation to the decreasing plutonium concentrations with time is that the plutonium is hydrolyzing or otherwise being adsorbed by the walls of the container. Perhaps preservation of the samples by adjusting the acid concentration to 0.1M nitric acid is not sufficient when samples are to be stored for more than a few weeks. More definite evidence that the plutonium concentration was decreasing with time was obtained when the concentration was plotted as a function of the time elapsed since the sample was prepared. One such plot is shown in Figure 4 for the plutonium-239 in Sample 1. Although there is considerable scatter in the points, a least squares calculation verified a negative slope. Also in this case, the extrapolated plutonium-239 concentration, 31.6 dis/min/liter, corresponds exactly to the concentration expected from the plutonium-239 added to the sample. Least squares fitting of the remaining data from Samples 1, 2, and 3 also indicates that hydrolysis or a similar reaction to remove plutonium is occurring in Samples 1 and 2, but not 3. All the extrapolated plutonium-in-water concentrations are given in parentheses under the expected values in Table 1. Agreement is very good in all cases except for the plutonium-238 in Sample 2. A possible explanation for the fact that the plutonium concentration in Sample 3 is not decreasing, whereas it is in Samples 1 and 2, is that Sample 3 is a substitute ocean water sample containing relatively large concentrations of salts which may be stabilizing the plutonium in the aqueous phase.

When the average collaborative study plutonium concentrations tabulated in Table 15 are compared to the reference values for the same samples, it is clear that there is definite agreement on the plutonium-239 concentrations in Samples 2 and 4. For Sample 2, these concentrations are 0.96 vs. 0.966 dis/min/liter, and for Sample 4, 0.42 vs. 0.42 dis/min/liter. On the other hand, for Sample 4 the average plutonium-238 concentration from the collaborative study was five times as high as

the reference value, and these two values certainly do not agree.

To determine whether the other average collaborative study plutonium concentrations agree with the reference values, the t-test was used on the data from the first three samples. Two equations were used in applying the t-test. The first relationship applies to a situation in which the average of the measured value and the average of the reference value each shows a significant standard deviation; this equation is as follows (Walpole and Myers, 1972):

$$t = \left|\bar{X}_c - \bar{X}_r\right| \Big/ \left(\frac{S_c^{\,2}}{n_c} + \frac{S_r^{\,2}}{n_r}\right)^{\frac{1}{2}} \qquad (5)$$

where:

t = test criterion

$\bar{X}_c$ = average of collaborative test results

$\bar{X}_r$ = average reference value

S_c = estimated standard deviation of collaborative test results

n_c = number of collaborating laboratories

S_r = estimated standard deviation of reference concentration

n_r = number of determinations made in obtaining the reference value

The second relationship applies to a situation in which the error in the reference value is considered to be negligible, or in other words, the reference value is considered to be the true mean. This equation is as follows (Youden and Steiner, 1975):

$$t = \frac{\left|\bar{X}_c - R\right| (n_c)^{\frac{1}{2}}}{S_c} \qquad (6)$$

where:

R = the reference value considered to be the true mean

Other quantities are defined as in equation (5)

Equation (5) was applied to Samples 1 and 2, and equation (6) was applied to Sample 3 using the data from Table 15. The quantities used in the calculations, the calculated value of t, and the critical value of t (t_{crit}) are given in Table 16. The critical value of t is for a 5% level of significance. When t is less than t_{crit}, it can be said that the two means agree. Thus, from the results in Table 16, it can be said that the collaborative test average does not agree with the reference value in Samples 1 and 3 for plutonium-239. It has already been suggested that hydrolysis may have occurred in Samples 1 and 2, and this could explain the discrepancy observed for the plutonium-239 in Sample 1.

The Mound Facility data for Sample 3 (cf. Table 5), on the other hand, seemed to indicate that no loss of plutonium occurred from this substitute ocean water sample. However, it is believed that there is a possibility that some initial hydrolysis occurred at the time the sample was prepared. If this is true, the best reference value for Sample 3 might also be the average of the single-laboratory evaluation values. These values are given in the last two rows of Table 16. Using these data and the average of the collaborative test concentrations, the t test indicates agreement with the Sample 3 plutonium-239 concentrations, but not with the plutonium-238 values. The error in the plutonium-238 values, however, could readily be explained by the fact that the 0.57 dis/min/liter value determined by Mound Facility for Sample 3 is high because of the plutonium-238 blank problem.

One of the objectives of the present study was to gather counting data from the laboratories participating in the collaborative study and determine whether the precision of the measured plutonium concentrations approached the precision expected from counting statistics. The standard deviations of the plutonium concentrations and the standard deviations expected from counting statistics are given in Table 17 for each sample for both plutonium-239 and plutonium-238, except for plutonium-238 in Sample 4. For Samples 1 and 2, the standard deviation of the data exceeded the error expected from counting statistics. This is to be expected in view of previous discussions in regard to a possible hydrolysis that occurred in these two river water samples. The data for Samples 3 and 4, however, show that the observed experimental standard deviation was that which would be expected from the counting statistics of the actual counting data. Thus, for the plutonium-in-water procedure studied, the precision of the results does indeed approach counting statistics.

The results of this study were summarized at the Twenty-Third Annual Conference on Bioassay, Environmental, and Analytical Chemistry (Bishop et al., 1977) and a few significant

comments were made at that meeting that should be noted here. It was pointed out that plutonium in the environment could be present as plutonium (VI) (Larsen and Oldham, 1977) and the procedure evaluated in this study did not account for this possibility. Use of an appropriate reducing agent, such as sodium bisulfite before coprecipitation would eliminate this problem. Sodium bisulfite has been used in a recent soil analysis procedure to reduce hexavalent plutonium (Hiatt, 1977). A second comment made at the conference was that in order to preserve samples for plutonium analysis, adjustment to 4N hydrochloric acid was necessary to prevent any loss of plutonium on storage. This unfortunately would require rather large amounts of concentrated hydrochloric acid when analyzing large samples. As an alternative, it has been suggested that adjustment to 1N nitric acid would be sufficient to preserve water samples for plutonium analysis. This option would certainly require considerably less acid.

In conclusion, from the results of this collaborative study it is believed that the plutonium-in-water procedure which was evaluated would be a good analytical method. The method is relatively simple and gave results of good precision and accuracy. Where statistical tests indicated a disagreement between a collaborative test result average and the reference value, it is believed that hydrolysis or some other phenomenon occurring in the sample was the problem rather than the analytical method itself.

TABLE 16. t-TEST FOR SYSTEMATIC ERRORS IN COLLABORATIVE STUDY RESULTS

Sample	Isotope	Tabulated Quantity[a]					
		$\bar{X}_c \pm S_c$	$\bar{X}_r \pm S_r$ (or R)	n_c	n_r	t	t_{crit}
1	Pu-239	26.77 ± 3.16	28.9 ± 0.9	14	5	2.22	2.11
1	Pu-238	8.96 ± 1.18	9.94 ± 0.76	14	5	2.11	2.11
2	Pu-239	0.958 ± 0.124	0.966 ± 0.044	13	7	0.21	2.10
2	Pu-238	7.77 ± 0.47	7.51 ± 0.31	13	7	1.48	2.10
3	Pu-239	4.15 ± 0.21	4.40	13		4.29	2.18
3	Pu-238	0.50 ± 0.06	0.53	13		1.80	2.18
3[b]	Pu-239	4.15 ± 0.21	4.28 ± 0.13	13	8	1.75	2.09
3[b]	Pu-238	0.50 ± 0.06	0.57 ± 0.03	13	7	3.48	2.10

[a]The tabulated quantities are defined in the text.
[b]The second set of data for Sample 3 is given using Mound's average plutonium concentrations as the "reference values."

TABLE 17. OVERALL STANDARD DEVIATION OF COLLABORATIVE STUDY RESULTS AND STANDARD DEVIATIONS EXPECTED FROM COUNTING STATISTICS ERRORS

Sample Number	Isotope	Average Pu Concentration (dis/min/liter)	Std. Dev. of Data (%)	Std. Dev. Expected From Counting Statistics (%)
1	Pu-239	26.8	±3.2 (12%)	±0.9 (3.3%)
1	Pu-238	8.96	±1.18 (13%)	±0.37 (4.2%)
2	Pu-239	0.96	±0.12 (13%)	±0.08 (8.3%)
2	Pu-238	7.78	±0.47 (6.0%)	±0.29 (3.8%)
3	Pu-239	4.15	±0.21 (5.1%)	±0.19 (4.7%)
3	Pu-238	0.51	±0.059 (12%)	±0.060 (12%)
4	Pu-239	0.42[a]	±0.053 (12%)	±0.055 (13%)

[a]Units here are dis/min/sample.

REFERENCES

1. Abrahamson, S. G., D. G. Carfagno and B. R. Kokenge, "Plutonium-238 Isotopic Fuel Form Data Sheets," U.S.A.E.C. Report MLM-1691, 1969.

2. American Society for Testing and Materials, 1976 Annual Book of ASTM Standards, Part 32, Designation: D 1141-75, p. 48, Philadelphia, Pa., 1976a.

3. American Society for Testing and Materials, 1976 Annual Book of ASTM Standards, Part 41, Standard Recommended Practice for Dealing with Outlying Observations, Designation: E178-75, p. 183, Philadelphia, Pa., 1976b.

4. Bishop, C. T., A. A. Glosby, R. Brown and C. A. Phillips, "Collaborative Study of a Tentative Standard Method for the Determination of Plutonium in Water." In Program and Abstracts: Twenty-Third Annual Conference on Bioassay, Environmental, and Analytical Chemistry, U.S. Energy Research and Development Administration Report IDO-12083, paper No. 1, 1977.

5. Fukai, R., and C. N. Murray, "Results of Plutonium Intercalibration in Seawater and Seaweed Samples," In Reference Methods for Marine Radioactivity Studies II, Technical Reports Series No. 169, International Atomic Energy Agency, Vienna, p. 167, 1975.

6. Golchert, N. W., and J. Sedlet, "Radiochemical Determination of Plutonium in Environmental Water Samples," Radiochem. Radioanal. Letters, 12, 215 (1972)

7. Hahn, P. B., E. W. Bretthauer, P. B. Altringer and N. F. Mathews, "Fusion Method for the Measurement of Plutonium in Soil; Single Laboratory Evaluation and Interlaboratory Collaborative Test," U.S. Environmental Protection Agency, Report EPA-600/7-77-078, Las Vegas, NV, 1977

8. Harley, J. H., "Radiochemical Determination of Plutonium in Urine, Feces and Water." In HASL Procedures Manual, U.S.A.E.C. Report HASL-300, 1972.

9. Harley, J. H., "Worldwide Plutonium Fallout from Weapons Tests." In Proceedings of Environmental Plutonium Symposium, Los Alamos Scientific Laboratory Report LA-4756, 1971.

10. Hiatt, M. H., "Simultaneous Analysis of Plutonium, Americium and Curium in Soil, U.S. Environmental Protection Agency, Las Vegas Nevada, (In preparation).

11. Hodge, V. F., and M. E. Gurney, "Semiquantitative Determination of Uranium, Plutonium and Americium in Sea Water," Anal. Chem., 47, 1866 (1975).

12. International Atomic Energy Agency, Transuranium Nuclides in the Environment, Proceedings of the Symposium on Transuranium Nuclides in the Environment Organized by the United States Energy Research and Development Administration and the International Atomic Energy Agency held in San Francisco, 17-21 November 1975, Vienna, 1976.

13. Kooi, J., and V. Hollstein, "An Improved Method for the Determination of Trace Quantities of Plutonium in Aqueous Media-Method and Procedure," Health Physics, 8, 41 (1962).

14. Korkisch, J., Modern Methods for the Separation of Rarer Metal Ions, Pergamon Press, New York, N.Y., pp. 28, 1969.

15. Kressin, I. K., W. D. Moss, E. E. Campbell and H. F. Schulte, "Plutonium-242 vs. Plutonium-236 as an Analytical Tracer," Health Physics, 28, 41 (1975).

16. Larsen, R. P., and R. D. Oldham, "The Oxidation of Pu(IV) to Pu(VI) by Chlorine-Consequences for the Maximum Permissible Concentration of Plutonium in Drinking Water." In Program and Abstracts. Twenty-Third Annual Conference on Bioassay, Environmental, and Analytical Chemistry, U.S. Energy Research and Development Administration Report IDO-12083, paper No. 12, 1977.

17. Livingston, H. D., D. R. Mann and V. T. Bowen, "Analytical Procedures for Transuranic Elements in Seawater and Marine Sediments." In Analytical Methods in Oceanography, Advances in Chemistry Series, No. 147, p. 124, American Chemical Society, Washington, D. C. 1975a.

18. Livingston, H. D., D. R. Mann and V. T. Bowen, "Double Tracer Studies to Optimize Conditions for the Radiochemical Separation of Plutonium from Large Seawater Samples." In Reference Methods for Marine Radioactivity Studies II, Technical Reports Series No. 169, p. 69, International Atomic Energy Agency, Vienna, 1975b.

19. McDowell, W. J., D. T. Farrar and M. R. Billings, "Plutonium and Uranium Determination in Environmental Samples: Combined Solvent Extraction-Liquid Scintillation Method," Talanta, 21, 1231 (1974).

20. Peters, R., "Determination of ^{238}Pu and $^{239/240}Pu$ Activity," Los Alamos Scientific Laboratory, unpublished procedure, 1975.

21. Puphal, K. W., and D. R. Olsen, "Electrodeposition of Alpha Emitting Nuclides from a Mixed Oxalate-Chloride Electrolyte," Anal. Chem., 44, 284 (1972).

22. Scott, T. G., and S. A. Reynolds, "Determination of Plutonium in Environmental Samples Part II, Procedures," Radiochem. Radioanal. Letters, 23, 275 (1975).

23. Sill, C. W., "Some Problems in Measuring Plutonium in the Environment," Health Physics, 29, 619 (1975).

24. Sutton, D. C., G. Calderon and W. Rosa, "Determination of Environmental Levels of Pu-239, 240, Am-241, Cs-137 and Sr-90 in Large Volume Sea Water Samples," ERDA Health and Safety Laboratory, New York, N. Y., HASL-307, 1976.

25. Talvitie, N. A., "Radiochemical Determination of Plutonium in Environmental and Biological Samples by Ion Exchange," Anal. Chem., 43, 1827 (1971).

26. Talvitie, N. A., "Electrodeposition of Actinides for Alpha Spectrometic Determination," Anal. Chem., 44, 280 (1972).

27. U.S. Atomic Energy Commission Regulatory Guide 4.5, Measurements of Radionuclides in the Environment, Sampling and Analysis of Plutonium in Soil, May, 1974.

28. Walpole, R. E., and R. H. Myers, Probability and Statistics for Engineers and Scientists, Macmillan Publishing Co., Inc., New York, N.Y., p. 197, 1972.

29. Wong, K. M., "Radiochemical Determinations of Plutonium in Seawater, Sediments and Marine Organisms," Anal. Chem. Acta, 56, 355 (1971).

30. Wong, K. M., G. S. Brown and V. E. Noshkin, "A Rapid Procedure for Plutonium Separation in Large Volumes of Fresh and Saline Water by Manganese Dioxide Coprecipitation," submitted for publication in the Journal of Radioanalytical Chemistry, 1976.

31. Youden, W. J., and E. H. Steiner, "Statistical Manual of the Association of Official Analytical Chemists," Association of Official Analytical Chemists, Washington, D.C., 1975.

APPENDIX 1
TENTATIVE METHOD FOR THE DETERMINATION OF PLUTONIUM-239 AND PLUTONIUM-238 IN WATER (BY A COPRECIPITATION ANION EXCHANGE TECHNIQUE)

This appendix is a reprint of a procedure of the same title by Carl T. Bishop, Ralph Brown, Antonia A. Glosby, Charles A. Phillips and Bob Robinson* of Mound Facility in Miamisburg, Ohio. The report was prepared September 17, 1976, for the U. S. Environmental Protection Agency under Contract No. EPA-IAG-D6-0015. Mound Facility is operated by Monsanto Research Corporation for the U. S. Department of Energy under U. S. Government Contract No. EY-76-C-04-0053. The procedure was prepared by Mound Facility for distribution to participants in the interlaboratory collaborative study and was designated as report number MLM-MU-76-69-0002.

---

*Present address is Battelle Pacific Northwest Laboratory, Richland, Washington 99352

PREFACE

The analytical procedure described in this document is a method for the determination of plutonium in water which is being collaboratively tested according to an interagency agreement between the U.S. Environmental Protection Agency (USEPA) and the U.S. Energy Research and Development Administration (USERDA). Data from the collaborative test will be examined and information on the precision and accuracy of the method will be obtained. Final USEPA and USERDA documents will be prepared describing the results of the collaborative test.

In order to obtain a method for collaborative testing, the scientific literature on the determination of plutonium in water was first examined. Based on certain established criteria, a method from the literature was chosen and tested. Similar methods were tested and modifications were made until a final procedure was established. One of the principal criteria was that the method be cost effective. Thus the method that was finally adopted uses techniques that are relatively simple, and it is also designed to handle a large number of samples. Also,the equipment and reagents are generally common to the analytical laboratory.

CONTENTS

SECTIONS	PAGE
1. Scope and Application	4
2. Summary	5
3. Interferences	5
4. Apparatus	6
4.1 Instrumentation	6
4.2 Laboratory Equipment	8
4.3 Labware	8
5. Standards, Acids, Reagents	9
5.1 Standards	9
5.2 Acids	9
5.3 Reagents	9
6. Calibration and Standardization	10
6.1 Standardization of the Plutonium-242 Tracer Solution	10
6.2 Determination of Alpha Spectrometer Efficiency	10
7. Step-by-Step Procedure for Analysis	11
7.1 Coprecipitation	11
7.2 Acid Dissolution of Insoluble Residue	13
7.3 Anion Exchange Separation	14
7.4 Electrodeposition	15
7.5 Alpha Pulse-Height Analysis	16
8. Calculation of Results	17
8.1 Calculation of Plutonium Concentrations	17
8.2 Calculation of Alpha Spectrometer Efficiency	17
8.3 Calculation of Plutonium Recovery of the Chemical Analysis	18
9. References	19

WATER ANALYSIS PROCEDURE

1. Scope and Application

1.1 This procedure has been successfully tested and is applicable to both fresh water and sea water samples. It can be applied to sample volumes of a liter to 20 liters or more. In laboratories where the background of the counters is less than a count per 1000 minutes in the Pu-239, Pu-240, or the Pu-238 regions, and where reagent blanks contribute less than counter background, as little as a few femtocuries of plutonium can be determined when the sample is counted for a few days.

This method applies to soluble plutonium and to suspended particulate matter containing plutonium. When the latter situation occurs, an acid dissolution step is added to the procedure to assure that all of the plutonium dissolves.

1.2 The minimum detectable concentration of plutonium in water depends on the volume of water analyzed. The minimum detectable activity (MDA), that amount of activity which in the same counting time, gives a count which is different from the background count by three times the standard deviation of the background count, can be estimated from some typical parameters that might be expected from the present procedure.

Consider a sample that is counted for 1000 minutes on an alpha spectrometer having a 25% counting efficiency and a five count per 1000 minute background in the energy region of interest, and shows a 60% chemical recovery. Based on the definition of the MDA, the sample count would have to be 7 ($\sim 3 \times \sqrt{5}$), and to achieve this count under the conditions stated would require 0.045 d/m of activity. Thus, a typical MDA for plutonium in water by this procedure would be 0.05 d/m.

1.3 The precision of the method has not yet been extensively evaluated, but it is expected to approach that of the counting statistics errors. The accuracy is expected to be within limits propagated from counting statistics and the uncertainty in the specific activity of the tracer used.

1.4 This method was selected since it can be readily used by a laboratory technician. It does not involve any particularly sophisticated steps and after training by a chemist who understands the chemistry and the counting involved, the procedure can be routinely carried out by a technician.

2. Summary

The procedure consists of a coprecipitation, an anion exchange separation and electrodeposition, followed by alpha pulse height analysis. More specifically, the sample is acidified with nitric acid and plutonium-242 is added as a tracer before any chemical separations are performed. Iron is added to the water as iron (III) and the plutonium is coprecipitated with the iron as ferric hydroxide by adding ammonium hydroxide. After decantation and centrifugation, the ferric hydroxide precipitate containing the coprecipitated plutonium is dissolved and the solution is adjusted to 8M in HNO_3 for anion exchange separation. When the sample fails to dissolve because of the presence of insoluble residue, the residue is treated by a rigorous acid dissolution using concentrated nitric acid and hydrofluoric acids.

The sample is poured over an anion exchange column. The iron and most other elements that might be present pass through the column. Thorium is removed from the column with 12 M hydrochloric acid and then the plutonium is eluted by reducing it to plutonium (III) with the iodide ion. The plutonium is electrodeposited onto a stainless steel slide for counting by alpha pulse-height analysis using a silicon surface barrier detector. From the recovery of the plutonium-242 tracer, the absolute amounts of plutonium-238 and plutonium-239 can be calculated, and from the volume of sample analyzed the concentrations of these two isotopes in the water sample can be calculated.

3. Interferences

3.1 The procedure is such that no other alpha-emitting radioisotopes should appear along with the plutonium in the final counting step. The procedure has been tested with uranium, americim, thorium and polonium isotopes to verify the fact that these elements are separated out by anion exchange, and thus do not electrodeposit with the plutonium.

3.2 In determining low levels of plutonium in environmental samples, it is essential to make blank determinations to ascertain that the contamination from reagents, glassware and other laboratory apparatus is negligible. A blank value should be determined in exactly the same way as a sample value.

4. Apparatus

4.1 Instrumentation

4.1.1 Alpha Pulse-Height Analysis System - The system uses an ORTEC silicon surface barrier detector and is capable of giving a resolution of 50 keV or better with samples electrodeposited on flat mirror-finished stainless steel slides. The resolution here is defined as the width of the alpha peak in keV, when the counts on either side of the peak are equal to one-half of the counts at the maximum of the peak. The counting efficiency of the system should be greater than 15% and the background in the energy region of each peak should be less than 10 counts in 1000 minutes.

4.1.2 Electrodeposition Apparatus - A constant-current power supply, 0-12 V, 0-2 A, is required for the electrodeposition described in this procedure. A disposable electrodeposition cell is also required. An apparatus similar to that shown in Figure 1 has been used in the present procedure. In the present procedure, the cell itself is surrounded by water, but the water is not circulated. The electrodeposition can be carried out without the water cooling.

The cathode is a stainless steel slide pre-polished to a mirror finish. The diameter of the slide is 3/4" and the exposed cathode area during electrodeposition is 2 cm^2.

The anode is a 1 mm diameter platinum wire with an 8 mm diameter loop at the end, above the cathode disk.

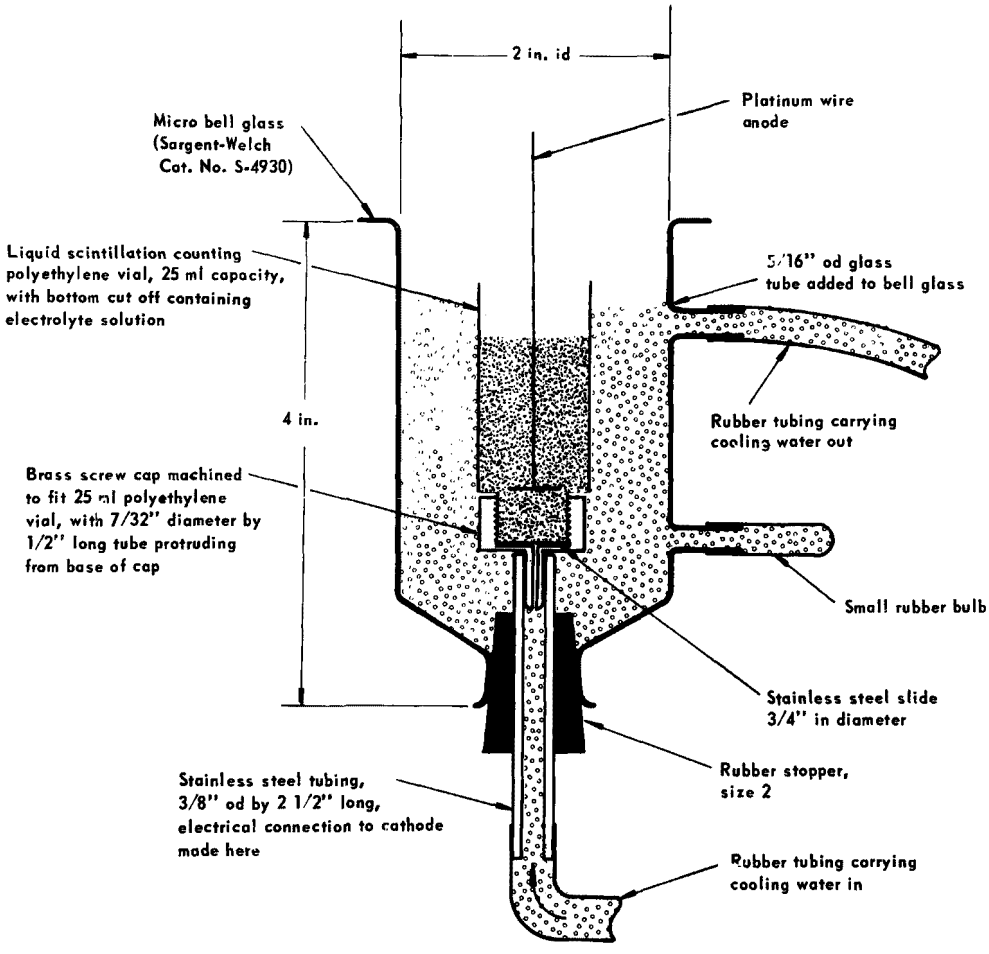

Figure 1. Water Cooled Electrodeposition Apparatus

4.2 Laboratory Equipment

4.2.1 Balance - top loading, capacity 1200 g, precision ±0.1 g

4.2.2 Hot plate - magnetic stirrer and stirrer bar

4.2.3 Peristaltic pump with pumping capacity of 4 liters per minute (required only for samples of several liters or greater)

4.2.4 Centrifuge - capable of handling 100 ml or larger centrifuge bottles (a larger centrifuge is required for handling 10 liter or larger samples)

4.3 Labware

4.3.1 Graduated cylinders - 5 ml to 1000 ml

4.3.2 Beakers - glass, 100 ml to 2 liters

4.3.3 pH paper - pH range 2 to 10

4.3.4 Automatic pipets - with disposable tips, volumes between 100λ and 1000λ

4.3.5 Centrifuge bottles - 100 ml or greater (larger bottles are required for 10 liter or larger samples)

4.3.6 Ion exchange columns - approximately 1.3 cm i.d., 15 cm long with 100 ml reservoir

4.3.7 Pipets - glass, class A

4.3.8 Disposable pipets - 2 ml glass eye-dropper type, with rubber bulb

4.3.9 Dropping bottles

4.3.10 Watch glasses

4.3.11 Polyethylene washing bottles

4.3.12 Glass stirring rods

4.3.13 Beaker tongs

4.3.14 Spatulas

4.3.15 Heat lamp - mounted on ring stand for drying slides

5. Standards, Acids, Reagents

5.1 Standards

5.1.1 National Bureau of Standards (NBS) plutonium-242 solution (SRM #4334 or #4335) with the concentration certified to ±1% of its stated activity, or a dilution of this standard.

5.2 Acids - reagent grade, meeting American Chemical Society (ACS) specifications; diluted solutions prepared from distilled deionized water.

5.2.1 Nitric acid - concentrated (16 M), 8 M

5.2.2 Hydrochloric acid - concentrated (12 M), 0.5 M

5.2.3 Sulfuric acid - concentrated (18 M), 1.8 M

5.2.4 Hydrofluoric acid - concentrated (48% solution)

5.2.5 Boric acid - powder or crystalline

5.3 Reagents - reagent grade, meeting ACS specifications, solutions prepared from distilled deonized water

5.3.1 Ferric chloride - in 0.5 M HCl to give 50 mg of iron per ml of solution

5.3.2 Ammonium hydroxide - concentrated (15 M), 1.5 M, 0.15 M

5.3.3 Sodium nitrite

5.3.4 Anion exchange resin - Bio Rad AG1-X8 (100-200 mesh) chloride or nitrate form. (Available from Bio Rad Laboratories, 3rd and Griffin Ave., Richmond, Calif., 94804). A column is prepared by slurrying this resin with 8 M HNO_3 and pouring it onto a column of inside diameter approximately 1.3 cm. The height of the column of resin should be about 8 cm, or greater for samples containing suspended matter or for larger volume samples. The resin is then converted to the nitrate form by passing 10 column volumes of 8 M HNO_3 through the column.

5.3.5 Ammonium iodide - 1 M. (prepare fresh weekly)

5.3.6 Sodium hydrogen sulfate - ∿5% in 9 M H_2SO_4 ; dissolve 10 g of the $NaHSO_4$ in 100 ml of water and then carefully add 100 ml of 18 M H_2SO_4 .

5.3.7 Preadjusted electrolyte - 1 M ammonium sulfate adjusted to pH 3.5 with 15 M NH_4OH and 18 M H_2SO_4 .

5.3.8 Thymol blue indicator, sodium salt (available from Fisher Scientific Company) - 0.04% solution.

5.3.9 Ammonium nitrate - 1% in 0.15 M NH_4OH.

5.3.10 Ethyl alcohol - made slightly basic with a few drops of 15 M NH_4OH per 100 ml of alcohol.

6. Calibration and Standardization

6.1 Standardization of the Plutonium-242 Tracer Solution
This tracer is available from the National Bureau of Standards (NBS) as SRM #4334 or #4335. The overall uncertainty of the concentration of the plutonium-242 is ±1.0%.

If a laboratory desires to standardize its own solution, aliquots of the solution could be mounted on slides and counted with a 2π proportional counter. The efficiency of the 2π counter must accurately be determined with an NBS alpha point source, making corrections for resolving time and backscattering if necessary.

6.2 Determination of Alpha Spectrometer Efficiency

An accurate determination of the alpha spectrometer counting efficiency is not necessary to get an accurate concentration of plutonium isotopes in the sample being analyzed. This is because of the fact that when a tracer is used, the counting efficiency is the same for the tracer and the unknown plutonium isotopes, and is not needed to calculate the unknown plutonium concentrations (cf. section 8.1).

An approximate determination of the alpha spectrometer counting efficiency is required to calculate the plutonium recovery of a particular analysis. To determine this efficiency requires that one count an alpha particle source of a known alpha particle emission rate under the same conditions that the samples are counted. The alpha particle counting efficiency is then calculated as illustrated in section 8.2.

7. Step By Step Procedure For Analysis

7.1 Coprecipitation

7.1.1 Weigh or measure the volume of a one liter or larger water sample.

7.1.2 If the sample has not been acidified, add 5 ml of 16 M HNO_3 per liter of sample.

7.1.3 Mix the samples completely using a magnetic stirrer for small samples, or a peristaltic or other pump for larger samples. Check the acidity with pH paper. If it is greater than 2, add 16 M HNO_3 until it reaches this value.

7.1.4 Add standardized Pu-242 tracer with a calibrated pipet (or add a weighed amount of the tracer) to give about 10 dis/min of Pu-242. If the Pu-238 or Pu-239 content of the sample is known to be high, use Pu-236 tracer.

7.1.5. Mix the sample for about one hour or longer if the sample volume is greater than a few liters. (If the sample volume is only a few liters, it is advisable to heat the water to 50-60°C while stirring.)

7.1.6 Add 50 mg of iron as $FeCl_3$ in 0.5M HCl to a one liter sample (or more iron, up to 1 gram, to a sample of a few hundred liters).

7.1.7 Stir again for ten minutes or longer if the sample volume is greater than a few liters. (If

the sample volume is only a few liters or less, heat the sample to boiling).

7.1.8 Add 15 M NH_4OH while stirring to precipitate the iron. Add a slight excess of 15 M NH_4OH to raise the pH to 9-10 as determined with pH paper.

7.1.9 Continue to stir the sample for 30 minutes, or longer for samples with a volume greater than a few liters, before allowing it to settle.

7.1.10 After the sample has settled sufficiently, decant the supernate, being careful not to remove any precipitate. (If the analyst wishes to continue immediately, the iron hydroxide may be filtered out at this time).

7.1.11 Slurry the remaining precipitate and supernate and transfer to a centrifuge bottle. If larger samples of water are being analyzed, it is necessary to transfer the slurry to a large beaker and allow it to settle again.

7.1.12 Centrifuge the sample and pour off the remaining supernate.

7.1.13 Dissolve the ferric hydroxide with a minimum of 16M HNO_3. (If organic matter is present, it may be necessary to treat the sample with 30% H_2O_2 and 16 M HNO_3 to remove it.)

7.1.14 If the precipitate dissolves completely, add a volume of 16 M HNO_3 equal to the volume of the sample solution, dilute to 100-150 ml with 8 M HNO_3, and then proceed to Section 7.3, Anion Exchange Separation. If the precipitate does not dissolve in nitric acid, proceed to section 7.2 Acid Dissolution of Insoluble Residue.

7.2 Acid Dissolution of Insoluble Residue

7.2.1 When the precipitate fails to dissolve in nitric acid, add more 16 M HNO_3 to a total volume of about 75 ml, transfer the entire sample to a Teflon beaker, and add 75 ml of 48% HF. (CAUTION: HF is extremely hazardous. Wear rubber gloves, safety glasses or goggles and a lab coat. Clean up all spills and wash thoroughly after using HF. Avoid breathing any HF fumes.)

7.2.2 Add a Teflon coated stirring bar and heat on a magnetic stirrer hot plate for about 4 hours at a temperature near boiling. Add equal amounts of 16 M HNO_3 and 48% HF to keep the volume at about 150 ml.

7.2.3 Allow the mixture to cool, and decant the solution into another teflon beaker.

7.2.4 Evaporate this solution to dryness.

7.2.5 While this solution is drying, add 75 ml of 12 M HCl and 2 g of H_3BO_3 to the undissolved residue. Stir and let stand until the solution from the previous step has evaporated to dryness.

7.2.6 Transfer the HCl-H_3BO_3 mixture from the last step to the dried sample, leaving any residue behind. Rinse the residue once with water and transfer the water to the sample.

7.2.7 Evaporate the sample in the Teflon beaker to about 10 ml.

7.2.8 Add 100 ml 16 M HNO_3 and boil to remove the HCl.

7.2.9 Evaporate the sample to a volume of about 50 ml.

7.2.10 Remove from the hotplate, and add a volume of distilled water equal to the volume of the sample.

7.2.11 Add 8 M HNO_3 to a volume of 150 ml, 1 g of H_3BO_3 and allow the solution to cool.

7.2.12 Filter the solution through a Whatman GF/A glass fiber filter and wash the filter a few times with 8 M HNO_3. Discard any residue in the filter paper and proceed with the analysis of the filtrate according to step 7.3.1.

7.3 Anion Exchange Separation

7.3.1 To the solution from the coprecipitation procedure or from the acid dissolution which should be 7-9 M in nitric acid, add 1g of $NaNO_2$, heat to boiling and cool.

7.3.2 Pass the sample solution through the prepared anion exchange resin column (cf. Section 5.3.4) at a flow rate no greater than 4 ml/min.

7.3.3 After the sample has passed through the column, rinse the column with six column volumes of 8 M HNO_3, again at a flow rate no greater than 4 ml/min.

7.3.4 Rinse the ion exchange resin column with six column volumes of 12 M HCl at a flow rate no greater than 2 ml/min.

7.3.5 Elute the plutonium with four column volumes of 12 M HCl containing 1 ml of 1 M NH_4I per 30 ml of the 12 M HCl*, at a flow rate no greater than 2 ml/min.

7.3.6 Rinse the column with two portions of 12 M HCl equal to the volume of the column of resin at maximum flow rate.

7.3.7 Evaporate the sample containing the plutonium to about 20 ml and add 5 ml of 16 M HNO_3.

*Prepare fresh just before elution.

7.3.8 Evaporate the sample to near dryness.

7.3.9 Add 20 ml of 16 M HNO_3 and evaporate to near dryness.

7.4 Electrodeposition

7.4.1 Add 2 ml of a 5% solution of $NaHSO_4 \cdot H_2O$ in 9 M H_2SO_4 to the sample.

7.4.2 Add 5ml of 16 M HNO_3, mix well and evaporate to dryness, but do not bake.

7.4.3 Dissolve the sample in 5 ml of the preadjusted electrolyte (cf. section 5.3.7), warming to hasten the dissolution.

7.4.4 Transfer the solution to the electrodeposition cell using an additional 5-10 ml of the electrolyte in small increments to rinse the sample container.

7.4.5 Add three or four drops of thymol blue indicator solution. If the color is not salmon pink, add 1.8 M H_2SO_4 (or 1.5 M NH_4OH) until this color is obtained.

7.4.6 Place the platinum anode into the solution so that it is about 1 cm above the stainless steel slide which serves as the cathode.

7.4.7 Connect the electrodes to the source of current, turn the power on, and adjust the power supply to give a current of 1.2 amps. (Constant current power supplies will require no further adjustment, but others may require further adjustments during the electrodeposition).

7.4.8 Continue the electrodeposition for a total of 1.5 to 2.0 hours.

7.4.9 When the electrodeposition is to be terminated, add 1 ml of 15 M NH_4OH and continue the electrodeposition for 1 minute.

7.4.10 Remove the anode from the cell and then turn off the power.

7.4.11 Discard the solution in the cell and rinse the cell 3 times with 1% NH_4NO_3 in 0.15 M NH_4OH.

7.4.12 Disassemble the cell and wash the slide with ethyl alcohol that has been made basic with NH_4OH.

7.4.13 Touch the edge of the slide to a tissue to absorb the alcohol from the slide.

7.4.14 Dry the slide, place it in a box and label for counting.

7.5 Alpha Pulse-Height Analysis

7.5.1 When the amount of Pu-238 is large compared to the amount of Pu-239 and/or Pu-242, and when the amount of Pu-239 is large compared to the amount of Pu-242, tailing can contribute to the counts in the lower energy peaks. When this occurs, it is necessary to make corrections. One way of making these corrections is to prepare Pu-238 and Pu-239 sources in the same manner in which the samples are prepared, and determine the corrections from the alpha spectra of the pure isotope.

7.5.2 Background corrections of course must also be made. The background should be determined by at least a 4000 minute count and preferably longer if possible.

7.5.3 Count the samples for at least 1000 minutes, or longer if the detector efficiency is less than 15%, if the tracer yield is low, or if the unknown plutonium activity is low.

7.5.4 Determine the total counts in the Pu-238, Pu-239 and Pu-242 energy regions, and make the background and tailing corrections if necessary.

8. Calculation of Results

8.1 Calculation of Plutonium Concentrations

The concentration of plutonium-239 or plutonium-238 in the aliquot of water taken for analysis is given by:

$$X_i = \frac{C_i \times SA_t \times V_t}{C_t \times V_s} \qquad (8.1)$$

where X_i = the concentration of plutonium-239 or plutonium-238 in the water in disintegrations per minute (d/m) per liter.

C_i = the net sample counts in the plutonium-239 or plutonium-238 energy region of the alpha spectrum.

SA_t = the specific activity of the Pu-242 tracer in d/m/ml.

V_t = the volume of the Pu-242 tracer added in ml.

C_t = the net sample counts in the plutonium-242 tracer energy region of the alpha spectrum.

V_s = the volume in liters of the water sample taken for analysis.

8.2 Calculation of Alpha Spectrometer Efficiency

The absolute counting efficiency of the alpha spectrometer, ε, must be determined in order to calculate the plutonium recovery of the analytical procedure.

To determine this efficiency requires a standard source of a known alpha particle emission rate:

$$\varepsilon = R_s/R_\alpha \qquad (8.2)$$

where R_s = the net counting rate of the standard source in the energy region of the alpha emitter of interest in counts per minute.

R_α = the absolute alpha particle emission rate of the alpha emitter of interest in alphas per minute.

8.3 Calculation of Plutonium Recovery of the Chemical Analysis

The plutonium recovery efficiency expressed as a fraction, E, will be given by:

$$E = \frac{(C_t/t)}{SA_t \times V_t \times \varepsilon} \qquad (8.3)$$

where t = the counting time in minutes

and the other terms are as defined in sections 8.1 and 8.2.

REFERENCES

1. D. C. Sutton, G. Calderon and W. Rosa, "Determination of Environmental Levels of Pu-239,240, Am-241, Cs-137 and Sr-90 in Large Volume Sea Water Samples," ERDA Health and Safety Laboratory, New York, N.Y., HASL-307, 1976.

2. H. D. Livingston, D. R. Mann and V. T. Bowen, "Analytical Procedures for Transuranics Elements in Sea Water and Marine Sediments," in Analytical Methods in Oceanography, Advances in Chemistry Series, American Chemical Society, Washington, D.C., 1975, p. 124.

3. I. K. Kressin, W. D. Moss, E. E. Campbell and H. F. Schulte, "Plutonium-242 vs. Plutonium-236 as an Analytical Tracer," Health Physics, 28, 41 (1975).

4. T. G. Scott and S. A. Reynolds, "Determination of Plutonium in Environmental Samples Part II Procedures," Radiochem. Radioanal. Letters, 23, 275 (1975).

5. H. D. Livingston, D. R. Mann and V. T. Bowen, "Double Tracer Studies to Optimize Conditions for the Radiochemical Separation of Plutonium from Large Seawater Samples," in Reference Methods for Marine Radioactivity Studies II, Technical Reports Series No. 169, International Atomic Energy Agency, Vienna, 1975. p.69.

6. R. J. Budnitz, "Plutonium: A Review of Measurement Techniques for Environmental Monitoring," IEEE Trans. Nucl. Sci. 21, 430 (1974).

7. Measurements of Radionuclides in The Environment Sampling & Analysis of Plutonium in Soil, U.S. Atomic Energy Commission Regulatory Guide 4.5, May, 1974.

8. N. W. Golchert and J. Sedlet, "Radiochemical Determination of Plutonium in Environmental Water Samples," Radiochem. Radioanal. Letters, 12, 215 (1972).

9. N. A. Talvitie, "Electrodeposition of Actinides for Alpha Spectrometric Determination," Anal. Chem., 44,280 (1972).

10. K. W. Puphal and D. R. Olsen, "Electrodeposition of Alpha Emitting Nuclides from a Mixed Oxalate-Chloride Electrolyte", Anal. Chem., 44, 284 (1972).

11. K. M. Wong, "Radiochemical Determinations of Plutonium in Sea Water, Sediments and Marine Organisms," Anal. Chim. Acta. 56, 355 (1971).

12. National Bureau of Standards Handbook 80, "A Manual of Radioactivity Procedures", Superintendent of Documents, Washington, D.C. 1961.

13. C. W. Sill, F. D. Hindman and Jesse I. Anderson, Health Services Laboratory, USERDA, Idaho Falls, Idaho Simultaneous Determination of Alpha-Emitting Nuclides of Radium through Californium in Large Environmental and Biological Samples," to be published.

14. D. Curtis and R. Peters, Los Alamos Scientific Laboratory, Los Alamos, New Mexico, private communication.

APPENDIX 2

COLLABORATIVE STUDY INSTRUCTIONS - PLUTONIUM IN WATER

(September 1976)

1. Use the procedure "Tentative Method for The Determination of Plutonium-239 and Plutonium-238 in Water (By a Coprecipitation Anion Exchange Technique)." September 17, 1976.

2. If you have not used a procedure similar to the one enclosed, it would be advisable to analyze a few known samples, before analyzing the test samples.

3. If you do not have the ion exchange resin, or other reagents needed for the analysis of the test samples, Mound Laboratory will furnish them if you desire. Contacts are given below.

4. Use care in opening the samples. They were shipped in collapsable containers and may tend to spurt out when opened. Samples may be less than one liter in volume, but this does not matter; measure the weight or volume of samples 1, 2 and 3. When analyzing sample 4, quantitatively transfer the entire contents of the sample to a large beaker for analysis.

5. Additional amounts of any sample are available if a sample is spilled, an obviously incorrect plutonium concentration is obtained, etc. Contacts are given below.

6. Sample concentrations may be as low as 0.2 dis/min/liter. Blanks should be made in your laboratory to be certain that they are not a problem at this plutonium concentration.

7. We are requesting that the same tracer, MD-2, be used by all participants. Using 100λ of this tracer gives the approximate amount of Pu-242 called for in the procedure. If you dilute the tracer supplied, keep in mind that it is in a 5M HNO_3 solution.

8. In this collaborative test, the acid dissolution procedure (Section 7.2) will be required only on sample 4.

9. The electrodeposition apparatus illustrated in Figure 1 of the procedure is only an illustration. Your apparatus should be similar, but not necessarily the same.

10. All samples should be counted for at least 1000 minutes.

11. Individual counting data is requested so that the counting statistics error can be resolved from other errors.

12. Any comments you wish to make on the collaborative test and the procedure would be appreciated.

APPENDIX 3

QUESTIONNAIRE ON COLLABORATIVE STUDY OF
TENTATIVE METHOD FOR THE DETERMINATION
OF PLUTONIUM-239 AND PLUTONIUM-238 IN WATER

January, 1977

Laboratory_____ Contact_____

1. When (to the nearest week) were the chemical analyses performed? 5-17 weeks after sample preparation

2. Did you make a blank correction? Yes 4 No 10 If so, what were the values in d/m/l for Pu-239? 0.01 - 0.08 For Pu-238? 0 - 0.05

3. a) Did you dilute the Pu-242 tracer that was supplied? Yes 5 No 9

   b) If you diluted the tracer, did you make corrections in the specific activity of the tracer because of a change in density? Yes-5, No-0

   c) If you pipeted the tracer, was the volume of the pipet calibrated? Yes 7 No 6

4. Was the 1M NH_4I that you used less than two weeks old? Yes-14, No-0

5. Did you deviate considerably from any part of the procedure? Yes 2 No 9 Other 3
   If so, what were these deviations? (answer on other side)

6. What were the good points of this procedure? (answer on other side)

7. What were the bad points of this procedure? (answer on other side)

8. Do you believe that this would be a good reference method for plutonium in water? Yes-9, No-1, Other-4

9. Any other comments that you might have would be appreciated.

APPENDIX 4

DATA ON PLUTONIUM-242 TRACER

Isotope: Pu-242 I.D. No.: MD-2

Date Prepared: 8/30/76

Specific Activity: 77.0 dis/min/gram (±1.0%) (on date prepared)

Density: 1.164 g/cm^3 at 20°C

Acid Medium: 5M HNO_3

Source: National Bureau of Standards
Standard Reference Material 4334
Plutonium-242 Alpha-Particle
Solution Standard diluted (by mass dilution) with 5M HNO_3

Half Life: 3.9×10^5 years

Approximate Volume in Glass Ampoule: 2 ml

Opening Instructions: The constriction of the glass ampoule has been previously scored and reinforced with a blue ceramic band. It can readily be broken without a file. The small polyethylene bottle with the long narrow neck, enclosed with the ampoule, may be used to remove the tracer from the opened ampoule.

Prepared At: Mound Facility
Monsanto Research Corporation
Miamisburg, Ohio 45342

APPENDIX 5

LABORATORIES PARTICIPATING IN THE PLUTONIUM IN WATER COLLABORATIVE STUDY

Argonne National Laboratory
Occupational Health and Safety
Argonne, Illinois

Colorado Department of Health
Occupational and Radiological Health Division
Denver, Colorado

Food and Drug Administration
Winchester Engineering and Analytical Center
Winchester, Massachusetts

Lawrence Livermore Laboratory
Environmental Evaluations Group
Livermore, California

Los Alamos Scientific Laboratory
Group H-8 Environmental Studies
Los Alamos, New Mexico

LFE Environmental Analysis Laboratories
Richmond, California

Mound Laboratory, Monsanto Research Corporation
Nuclear Operations Analytical*
Miamisburg, Ohio

New York State Department of Health
Albany, New York

Reynolds Electrical & Engineering Co., Inc.
Environmental Sciences Department
Las Vegas, Nevada

Rocky Flats, Rockwell International
Environmental Sciences
Golden, Colorado

Sandia Laboratories
Division 3311
Albuquerque, New Mexico

---

*This analytical group was entirely separate from the group that conducted the study, i.e. the Environmental Evaluation Group.

U. S. Air Force
McClellan Central Laboratory
McClellan Air Force Base, California

U. S. Energy Research and Development Administration*
Health Services Laboratory
Idaho Falls, Idaho

U. S. Energy Research and Development Administration*
Health and Safety Laboratory†
New York, New York

U. S. Environmental Protection Agency
Environmental Monitoring and Support Laboratory - Cincinnati
Cincinnati, Ohio

U. S. Environmental Protection Agency
Environmental Monitoring and Support Laboratory - Las Vegas
Las Vegas, Nevada

U. S. Testing Company, Inc.
Richland, Washington

Westinghouse Electric Corporation
Advanced Reactors Division
Madison, Pennsylvania

---

*Now the U.S. Department of Energy

†Now the Environmental Measurements Laboratory

APPENDIX 6

TABLE OF REJECTED RESULTS

Data Reported	Laboratory Number 2	4	6	18
Sample 1				
Pu Recovery	3.7%, 6.3%	4.7%, 4.3%	21.8%, 52.5%	12.9%, 9.0%
Pu-239 (dis/min/liter)	26.1, 290.6	15.2, 18.7	23.5, 21.6	38.7, 34.4
Pu-238 (dis/min/liter)	6.6, 22.5	5.68, 5.46	7.08, 6.7	13.6, 11.1
Sample 2				
Pu Recovery	3.2%, 5.9%	3.5%, 3.1%	23.5%, 66.5%	14.7%, 8.7%
Pu-239 (dis/min/liter)	0, 31.1	0.5, 1	2.0, 0.83	3.1, 4.8
Pu-238 (dis/min/liter)	6.5, 0	5.0, 5.1	6.59, 5.95	9.0, 10.4
Sample 3				
Pu Recovery	4.1%, 15.5%	3.3%, 3.1%	127.6%, 79.6%	11.8%, 22.5%[a]
Pu-239 (dis/min/liter)	123.5, 5.8	2.9, 2.8	3.29, 3.15	6.1, 6.1
Pu-238 (dis/min/liter)	0, 0	0.3, 0.2	0.063, 0.313	0.6, 0.8
Sample 4				
Pu Recovery	4%, 4%	2.0%, 1.4%	94.1%, 67.9%	15.7%, 12.8%
Pu-239 (dis/min)	242, 115	0.0, 0.3	0.662, 0.588	2.6, 1.9
Pu-238 (dis/min)	10, 10.4	0.1, 3	0, 0	0.13, 0.23
Average Recovery	5.8%	3.2%	67%[b]	14%

[a]Rejected on the basis of an ASTM test for outliers.
[b]Laboratory rejected because of computational errors.

☆U.S. GOVERNMENT PRINTING OFFICE: 1978 - 785-975/1232 Region No. 9-1

TECHNICAL REPORT DATA
(Please read Instructions on the reverse before completing)

1. REPORT NO. EPA-600/7-78-122	2.	3. RECIPIENT'S ACCESSION NO.
4. TITLE AND SUBTITLE ANION EXCHANGE METHOD FOR THE DETERMINATION OF PLUTONIUM IN WATER: Single-Laboratory Evaluation and Interlaboratory Collaborative Study		5. REPORT DATE June 1978
		6. PERFORMING ORGANIZATION CODE
7. AUTHOR(S) C. T. Bishop, A. A. Glosby, R. Brown and C. A. Phillips		8. PERFORMING ORGANIZATION REPORT NO. MLM-2425
9. PERFORMING ORGANIZATION NAME AND ADDRESS Monsanto Research Corporation Mound Facility P. O. Box 32 Miamisburg, Ohio 45342		10. PROGRAM ELEMENT NO. 1NE625
		11. CONTRACT/GRANT NO. EPA-IAG-D6-0015
12. SPONSORING AGENCY NAME AND ADDRESS U.S. Environmental Protection Agency-Las Vegas Office of Research and Development Environmental Monitoring & Support Laboratory Las Vegas, Nevada 89114		13. TYPE OF REPORT AND PERIOD COVERED 5/20/76 - 6/17/77
		14. SPONSORING AGENCY CODE EPA/600/07

15. SUPPLEMENTARY NOTES
Mound Facility is operated by Monsanto Research Corporation for the U.S. Department of Energy under Contract No. EY-76-C-04-0053

16. ABSTRACT

This report gives the results of a single-laboratory evaluation and an interlaboratory collaborative study of a method for determining plutonium in water. The method was written for the analysis of 1-liter samples and involved coprecipitation, acid dissolution, anion exchange, electrodeposition, and alpha pulse-height analysis. The complete method is given in the first appendix to the report.

After the single-laboratory evaluation of the selected method, four samples were prepared for the collaborative study. There were two river water samples, a substitute ocean water sample, and a sample containing sediment. These samples contained plutonium-239 and a plutonium-238 at concentrations ranging from 0.42 to 28.9 dis/min/liter.

Standard deviations of the collaborative study plutonium concentrations ranged from 5% to 13%. In three cases standard deviations agreed with what was expected from counting statistics. It is believed that hydrolysis occurred in the river water samples resulting in errors greater than what was expected from counting statistics.

17. KEY WORDS AND DOCUMENT ANALYSIS

a. DESCRIPTORS	b. IDENTIFIERS/OPEN ENDED TERMS	c. COSATI Field/Group
Plutonium Quantitative Analysis Quality Assurance Water		07B 14B, D

18. DISTRIBUTION STATEMENT RELEASE TO PUBLIC	19. SECURITY CLASS *(This Report)* UNCLASSIFIED	21. NO. OF PAGES 80
	20. SECURITY CLASS *(This page)* UNCLASSIFIED	22. PRICE

EPA Form 2220-1 (Rev. 4-77) PREVIOUS EDITION IS OBSOLETE