WATER POLLUTION CONTROL RESEARCH SERIES ● 12060 FQE 12/70

Dry Caustic Peeling of Tree Fruit for Liquid Waste Reductions

U.S. ENVIRONMENTAL PROTECTION AGENCY

WATER POLLUTION CONTROL RESEARCH SERIES

The Water Pollution Control Research Series describes the results and progress in the control and abatement of pollution of our Nation's waters. They provide a central source of information on the research, development, and demonstration activities of the Environmental Protection Agency through inhouse research and grants and contracts with Federal, State, and local agencies, research institutions, and industrial organizations.

Inquiries pertaining to the Water Pollution Control Research Reports should be directed to the Head, Publications Branch, Research Information Division, R&M, Environmental Protection Agency, Washington, D.C. 20460.

Dry Caustic Peeling of Tree Fruit for Liquid Waste Reduction

By

National Canners Association
Western Research Laboratory
Berkeley, California 94710

for the

ENVIRONMENTAL PROTECTION AGENCY

Project #12060 FQE
December 1970

For sale by the Superintendent of Documents, U.S. Government Printing Office
Washington, D.C., 20402 - Price 60 cents

EPA Review Notice

This report has been reviewed by the Environmental Protection Agency and approved for publication. Approval does not signify that the contents necessarily reflect the views and policies of the Environmental Protection Agency, nor does mention of trade names or commercial products constitute endorsement or recommendations for use.

ABSTRACT

The peeling of apricots, peaches and pears was studied with a peel removal unit consisting of a series of spindles holding rotating rubber disks. The peel was removed by a wiping action of the flexible rubber disks on fruit wetted with hot sodium hydroxide solutions. The quality of fruit peeled with the experimental unit was comparable to fruit peeled by conventional chemical peeling; peeling losses were about the same for the experimental unit and the commercial units.

The most striking difference between the experimental unit and commercial units was in fresh water requirements and waste water volume and strength. The peeling of cling peach halves required one-fifteenth of the fresh rinse water volume of a conventional commercial peeler. The wastewater generated by the experimental peeling of peaches had about one-third of the chemical oxygen demand and suspended solid content of the wastewater from the commercial peeler.

The experimental peel removal unit accomplishes a diversion of potentially water polluting organic material from the wastewater to a peel sludge. The peel sludge has properties which allow it to be handled readily and disposed of as a solid residual.

This report was submitted in fulfillment of Project Number 12060FQE under the partial sponsorship of the Water Quality Office, Environmental Protection Agency.

CONTENTS

Section		Page
1	Conclusions	1
11	Recommendations	3
111	Introduction	5
1V	Design Phase	9
V	Construction Phase	11
V1	Operational and Evaluation Phase	21
V11	Discussion	31
V111	Acknowledgements	35
1X	References	37
X	Patents and Publications	39
X1	Appendices	41

FIGURES

No.		Page
1	Prototype Fruit Peel Removal Unit	8
2	Close-Up View of Prototype Peel Removal Unit	8
3	Fabricated Neoprene Rubber Disks	10
4	Peel Removal Unit, General Concept	10
5	Peeler Tray	11
6	Standard Gear Arrangement Showing Idler Support Bar	12
7	Peeler Spindle Bearing Supports and Knee Action Component	12
8	Disk Cover	13
9	Disk Scraper Inserted in Spindle Housing	14
10	Spindle Configurations 1 Through 4	15
11	Spindle Configurations 5 Through 8	16
12	Spindle Configurations 9 and 10	17
13	Schematic Drawing of Experimental Peach Peeling	22
14	Schematic Drawing of Commercial Pear Peeling	26
15	Schematic Drawing of Commercial Peach Peeling	29

TABLES

No.		Page
1	Sequence of Spindle Configurations Used for the Shaft Positions of Peel Removal Unit	18
2	Results of Peach Halve Peeling Using Rotating Rubber Disk Peel Removal Unit	23
3	Rinse Water Volume and Wastewater Characteristics for Peach Halve Peeling	24
4	Water Volume Requirements and Wastewater Characteristics for Commercial Cling Peach Peeler	25
5	Crossectional Size Distribution of Pears	27
6	Firmness Testing of Pears	27
7	Sodium Hydroxide and Sodium Carbonate Content of Pears Peeling Sludge	28
8	Comparison of Wastewater Characteristics for Commercial and Experimental Peeling of Cling Peach Halves	32
9	Results of Whole Bartlett Pear Peeling Using Rotating Rubber Disk Peel Removal Unit	33
10	Peeling Losses for Tree Fruit	33

SECTION I

CONCLUSIONS

1. Peel softened by hot solutions of sodium hydroxide can be removed efficiently by a series of rotating rubber disks from apricots, peaches and pears.

2. The quality of peeled fruit prepared with the experimental unit compares favorably with that of fruit peeled by conventional commercial equipment.

3. Peeling losses for apricots, peaches and pears peeled by the experimental unit are the same or slightly lower than those resulting from commercial peeling of these fruits.

4. The volume of fresh water needed and the volume of wastewater generated during experimental peeling of peach halves was one-fifteenth of that of conventional commercial peeling.

5. The chemical oxygen demand and suspended solids content of wastewater generated during experimental peeling of peach halves is one-third of that of wastewater generated during conventional commercial peeling.

SECTION II

RECOMMENDATIONS

1. A demonstration scale peel removal unit (at least 10 ton/hr capacity) should be constructed and operated in a commercial fruit cannery to confirm and extend the results obtained from operation of the 2 ton/hr unit.

2. Quality of final products prepared using the new peeling procedure should be carefully evaluated by experienced inspectors from industry and/or government.

3. Data on the rinse water volume required and wastewater generated during the peeling of pears and apricots should be obtained using appropriate spray rinsing rather than simple immersion.

SECTION III

INTRODUCTION

The preparation of tree fruits for preservation by freezing, dehydration or canning employs a complex technology and sophisticated equipment. The equipment and technology used in peeling tree fruit was developed over the years with high rates of production, adequate sanitation and optimum product quality as the principal design criteria. Until quite recently, only minor attention was paid to the effects of the peeling technology on the quantities and strengths of liquid wastes generated in the process as by-products.

Past and current research (and other water pullution abatement efforts) have, for the most part, emphasized "end of the pipe" handling and treatment of food processing wastewaters. Much time and large sums of money have been spent in testing and adapting methods of treatment and disposal for these liquid wastes. Rarely have any of the treatment systems used proven completely satisfactory. Variations in the nature and volume of food processing liquid wastes and inconsistent ability of different treatment systems to handle these variants have caused many problems.

In-plant surveys made by research teams from the National Canners Association have shown that high percentages of the total dissolved organic solids in the composite wastewater originate in unit operations such as peeling and blanching of raw commodities.[1]

The peeling of apples, apricots and peaches produces 0.47, 0.16, and 0.42 lbs of B.O.D. per case of finished product, respectively.[2] For peaches, the peeling operation, including the rinsing after peel removal, comprises 40.5 percent of the total lb of B.O.D. discharged in the composite liquid waste from a cannery.[3]

Often individual waste streams representing no more than five percent of the total wastewater volume may contain 50 to 70 percent of the total discharge of dissolved solids. Generally, the concentrated waste streams are diluted by converging streams of comparatively clean waters.

It has become increasingly apparent in recent years that it is more efficient to abate water pollution by changing processing technology rather than by expanding treatment facilities. There are many potential ways in which foods can be prepared for preservation which will drastically reduce the volume and strength of wastewater generated. An engineering development of the past three years in radical modification of conventional food processing technology to reduce liquid waste volume and strength is the "dry caustic" peeling of potatoes. This process resulted from work at the Engineering and Development Division, Agricultural Research Service, United States Department of Agriculture, Albany, California,[4, 5] and Magnuson Engineering, Inc., San Jose, California.[6]

The new process, now known as the USDA-Magnuson Infrared Anti-Pollution Peeling Process, uses infrared energy at 1650°F to condition the surfaces of potatoes treated with strong sodium hydroxide solutions. The peel can then be removed mechanically by soft rubber scrubbing rolls rather than by water as is done in conventional caustic peeling. A final spray rinse using low volumes of water removes residual peel fragments and excess sodium hydroxide. The effluent from the peeled potato rinsing may be combined with the solid material generated to produce a thick, yet pumpable, sludge.

Direct comparison of the new process with conventional peeling has demonstrated that the strength of the waste discharged has been reduced by 40 percent.[7] This result means that the capacity of secondary treatment plants required to condition the effluent to a satisfactory B.O.D. and suspended solids level[8] could be greatly reduced with substantial overall savings in equipment and operating costs. In situations where the potato processing effluent is treated in a municipal system in combination with domestic sewage, the resulting lower loadings allow for population growth in the area served by the plant without requiring costly expansion.

The tonnage of potatoes processed each year is substantial and reduction of water pollution caused by this commodity received first attention by scientists and engineers. However, there are other food commodities which are chemically peeled, and extension of the "dry caustic" peeling process to these would provide the potential for

significant water pollution abatement. For example, the weight of tree fruit peeled by chemical methods was about 1,000,000 tons in 1968. Each ton of apricots, peaches or pears processed, produced, on the average, about 12 pounds of B.O.D. and 9 pounds of suspended solids in the rinse water used in conventional chemical peeling. If only a 40 percent reduction in strength of wastes from plants peeling these fruits were achieved by "dry caustic" peeling, some 5,000,000 pounds of B.O.D. and 3,700,000 pounds of suspended solids would be removed from the effluent waste streams each year.

This report describes results from a collaborative project between the USDA and NCA to extend the water pollutional abatement potential of "dry caustic" peeling of potatoes to apricot, peach, and pear peeling.

The utility of the new peeling process for these three tree fruits was shown to be promising in exploratory studies.[9, 10] The potential for substantial reduction of liquid waste volume and strength by the new method of peeling tree fruit was recognized by the EPA and funds were made available to support an investigation.

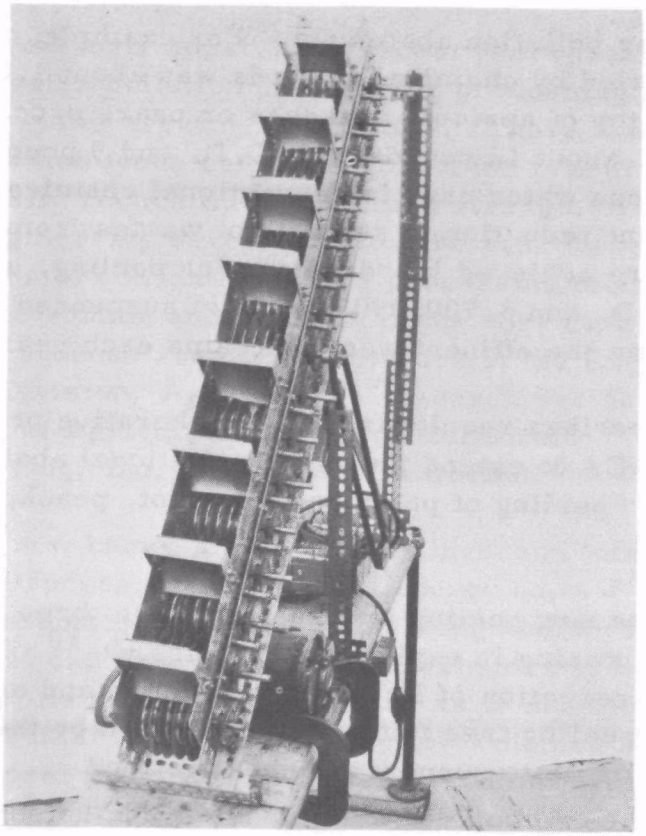

Figure 1
PROTOTYPE FRUIT PEEL REMOVAL UNIT

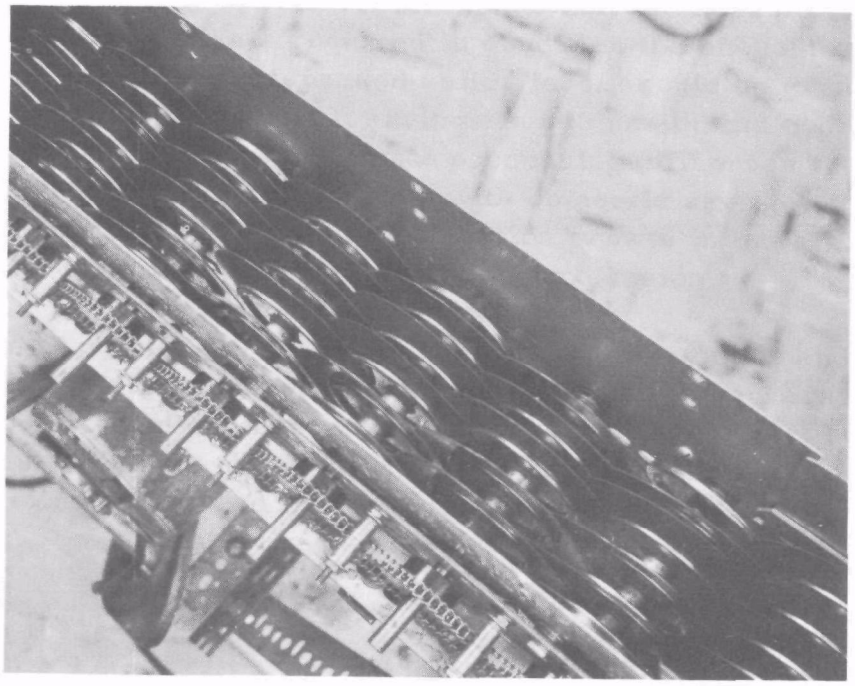

Figure 2
CLOSE UP VIEW OF PROTOTYPE PEEL REMOVAL UNIT

SECTION IV

DESIGN PHASE

The original concept, using rubber disks in the removal of peel from tree fruit treated with sodium hydroxide solution derived from the USDA at Albany, California. They worked out a prototype model, as shown in Figures 1 and 2. The unit consisted of an elevated series of rotating rubber disks, driven by a chain and sprocket arrangement. The rotating disks wipe the fruit clean of peel material as the product is conveyed. A detailed description of this unit has been published.[10]

The design of the scaled up peel removal section used in this project was provided by the USDA at Albany, California. The design of the fabricated neoprene rubber disks used in the unit for peach and pear peeling is shown in Figure 3.

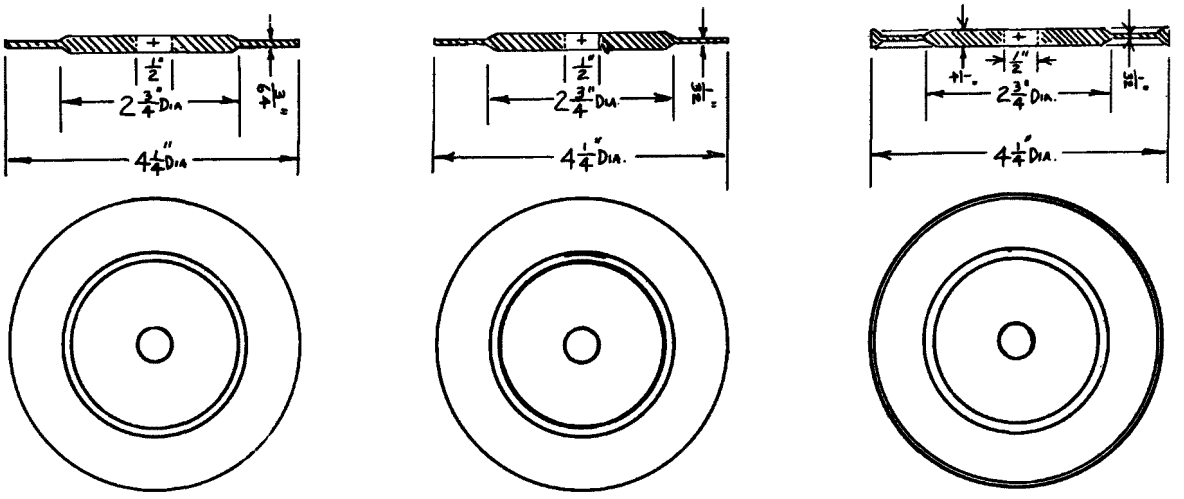

Figure 3

FABRICATED NEOPRENE RUBBER DISKS

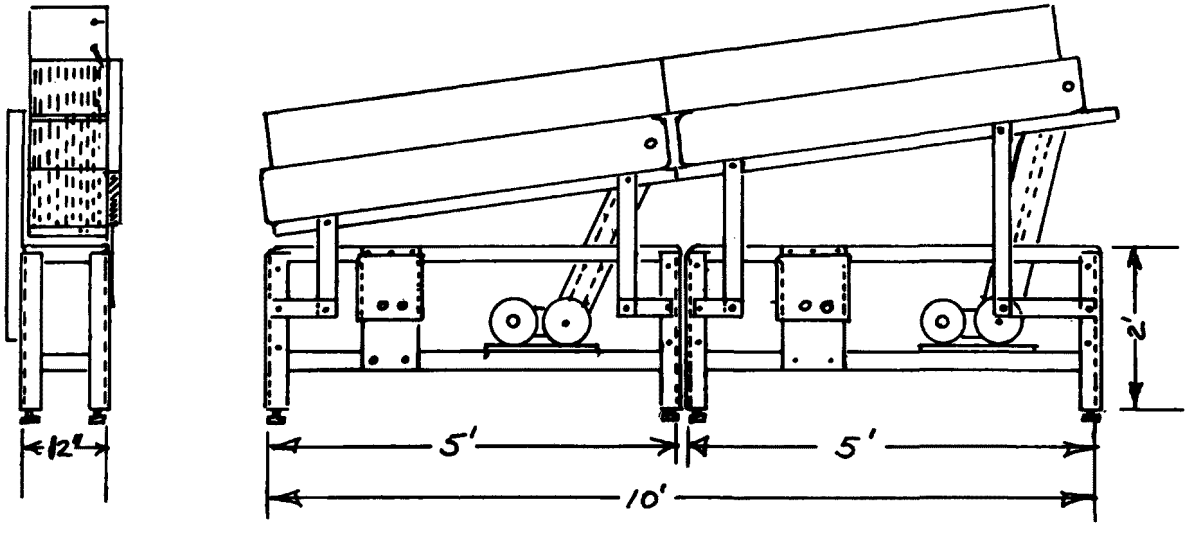

Figure 4

PEEL REMOVAL UNIT, GENERAL CONCEPT

SECTION V

CONSTRUCTION PHASE

Construction of the peel removal unit, as shown in a general concepts drawing in Figure 4, was accomplished by the USDA in Albany, California. An employee of the NCA was assigned as a collaborator in assisting USDA employees in the construction.

The shaft for each spindle of rubber disks, spacers, and stiffeners was cut from 1/2 in. stainless steel rod. One-half, 1/4 and 1/8 in. spacers were cut from clear plastic sheets; all spacers were 1-5/8 in. in diameter.

Nineteen slots for one five-foot section and 20 slots for the second section were milled from 4 in. by 1/4 in. x 5 ft aluminum sheets to accommodate the spindle shafts. A similar number of matched undersize slots were milled from 1-3/4 in. by 1/2 in. by 5 ft nylon sheet. One-eighth in. by 2 in. steel angles were cut, drilled and tapped to form the support structure; this was assembled using 3/8 in. by 5/12 in. round head screws. The peel catching tray was fabricated from sheet metal (See Figure 5.)

The idler gear support bar was constructed from 1 in. by 1/2 in. by 5 ft aluminum bar stock. Holes were drilled and tapped in the bar as

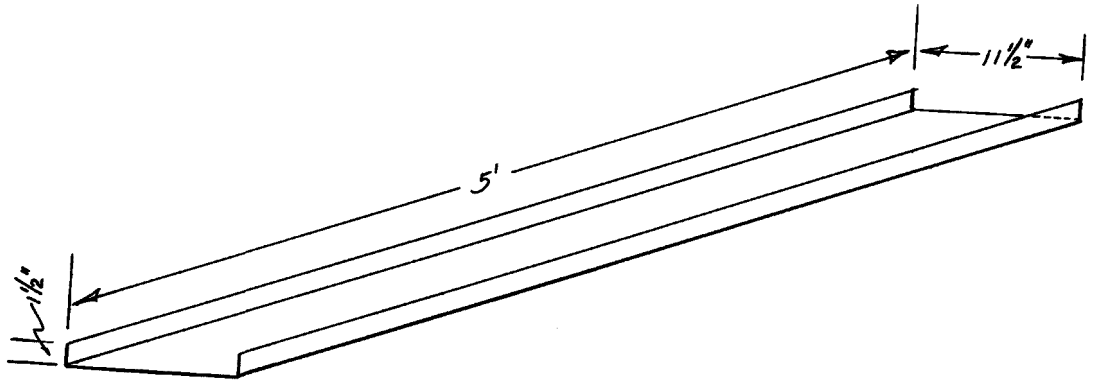

Figure 5
PEELER TRAY

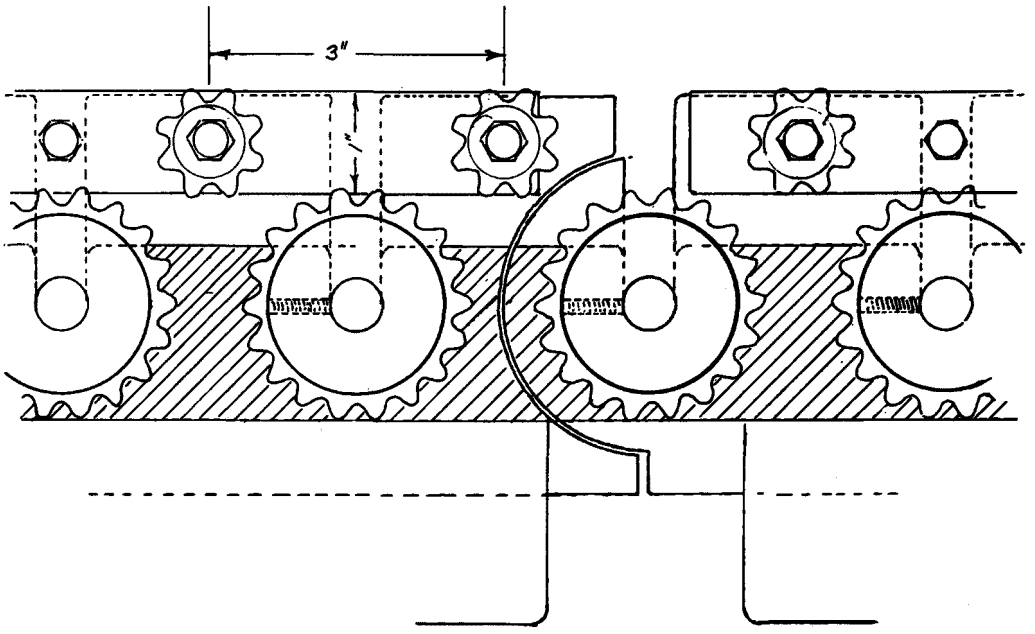

Figure 6.

STANDARD GEAR ARRANGEMENT
SHOWING IDLER SUPPORT BAR

shown in Figure 6. Spindles were held in position by a clamped 1/4 in. by 3/4 in. by 5 ft aluminum bar. Figure 7 shows the standard gear arrangement of #18 sprocket gears with #8 sprocket idler gears. A differential gear arrangement used alternate #16 and #20 gears in place of the #18 gears of the standard arrangement.

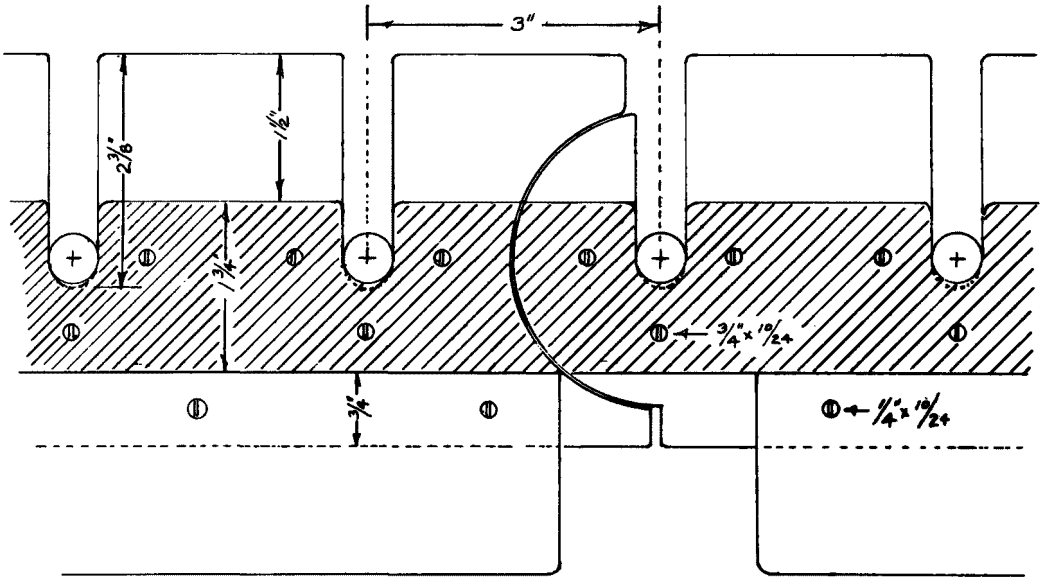

Figure 7
PEELER SPINDLE BEARING SUPPORTS AND
KNEE ACTION COMPONENT

The disk cover was fabricated from #20 gauge stainless steel sheet as shown in Figure 8. A 1/8 in. clear plastic cover was loosely fitted on each metal disk cover section; these were fitted with two wooden knobs to facilitate removal.

Two spindle carriers similar to those fabricated from aluminum were constructed from 3/4 in. exterior plywood.

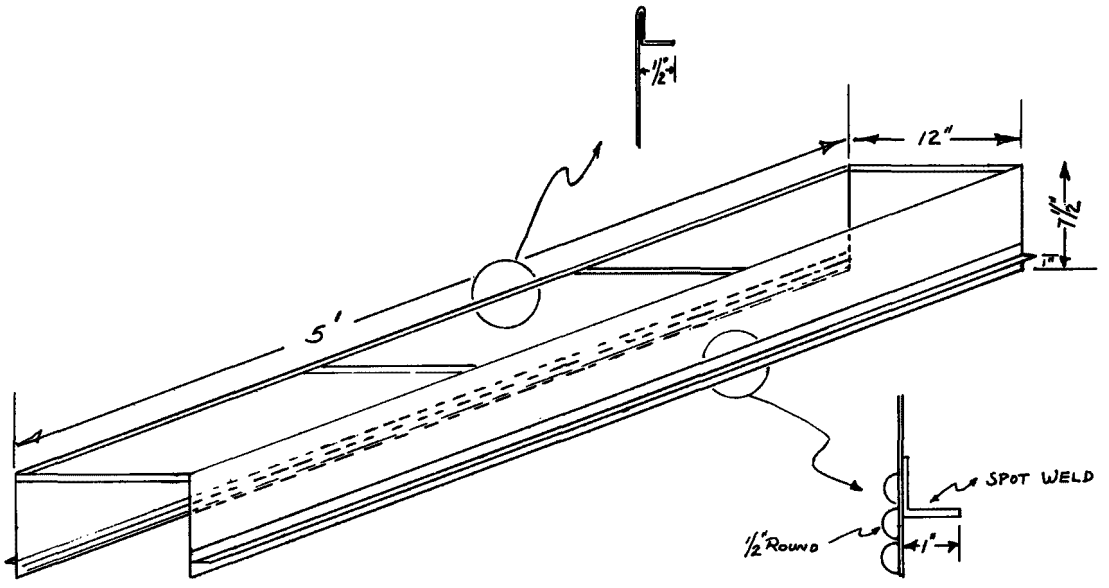

Figure 8

DISK COVER

The starters and variable drive 3/4 H. P. motors were positioned as shown in Figure 4. The starters were first attached to brackets and then positioned to the welded rectangular frame support. The motor-bases were connected to 3/4 in. exterior plywood and then clamped to the steel frame support. V belts and pulley were connected and galvanized steel belt guards constructed and attached to the units.

In the initial trial runs with peaches, a correction was needed to prevent the peach halves from spinning in place along the sides of the disk cover; 1/2 in. half-round wood stock was cemented to the cover as indicated by the insert in Figure 8.

Another modification, the use of wiper bars in the second tray section, Figure 9, was inserted to remove a large amount of tacky material from pears before they came in contact with the fresh water.

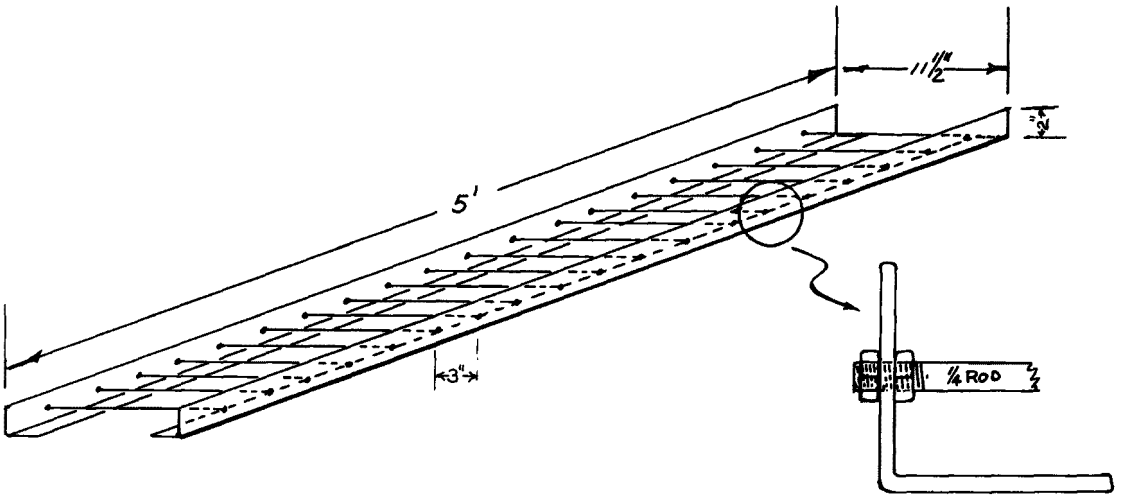

Figure 9

DISK SCRAPER INSERTED IN SPINDLE HOUSING

The custom fabricated neoprene rubber disks were not delivered until after the apricot peeling had started. The disks used for the apricot peeling experiments were fabricated and assembled by hand. Four and 1/4 in. diameter by 1/32 in. thick disks were cut from a roll of Shore A, durometer 50 [11] food grade rubber sheet. One-half in. diameter holes were punched out of both the rubber disks and 2-3/4 in. diameter Mason jar lids used as stiffeners. The spindles were assembled on the stainless shafts using the plastic spacers.

Six different sequences of spindles were used for peeling experiments on apricots, peaches and pears. Three of the sequences used 39 identical spindles and three of the sequences used a combination of several different spindle configurations. The ten different combinations of rubber disks, spacers and stiffeners used for spindle configurations have been assigned numbers and are shown diagramatically in Figures 10 through 12 as configurations 1 through 10.

The sequences of individual spindle configuration in the 39 slots provided for the spindle shafts are designated by the letters A through F. The spindle sequence A consisted of 39 identical spindle configurations designated by number 1. The spindle sequence F consisted of 39 identical spindle configurations designated as number 2. The spindle configuration D consisted of 39 identical spindle configurations

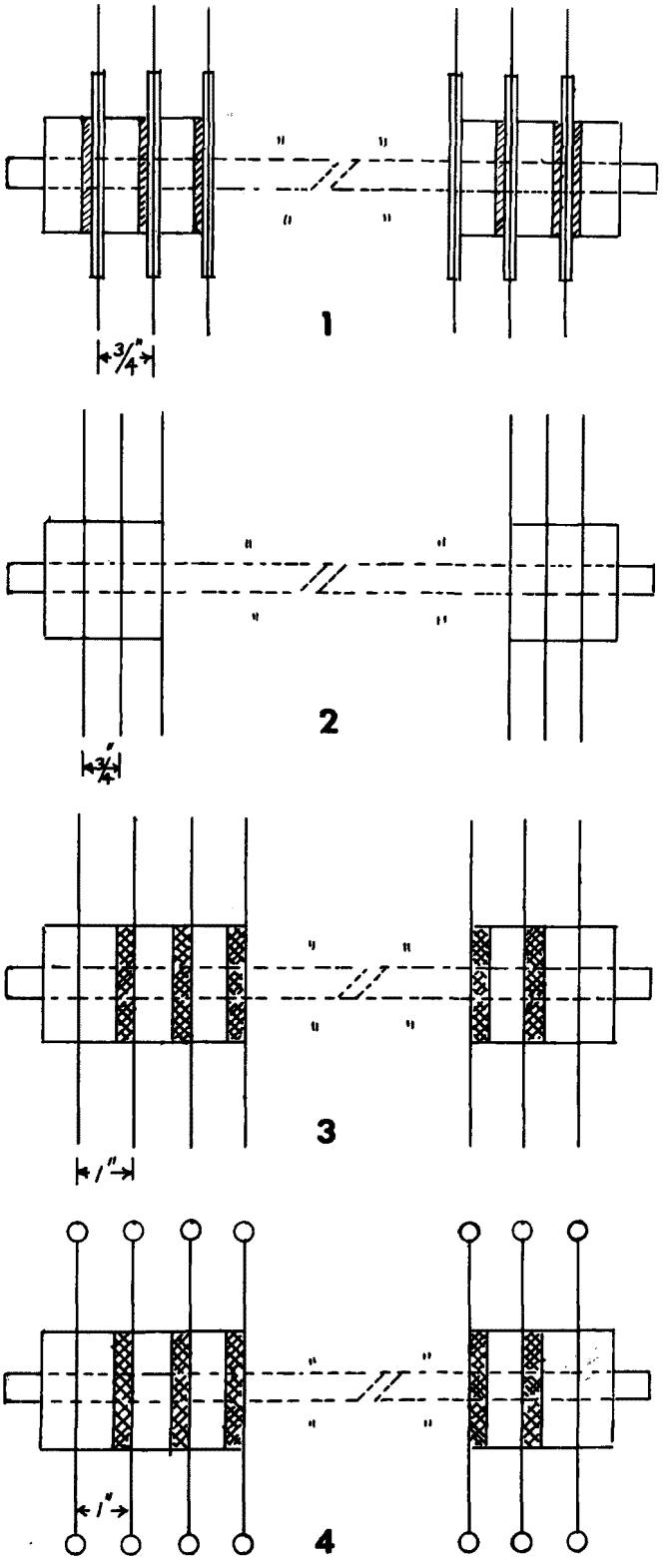

Figure 10. SPINDLE CONFIGURATIONS 1 THROUGH 4

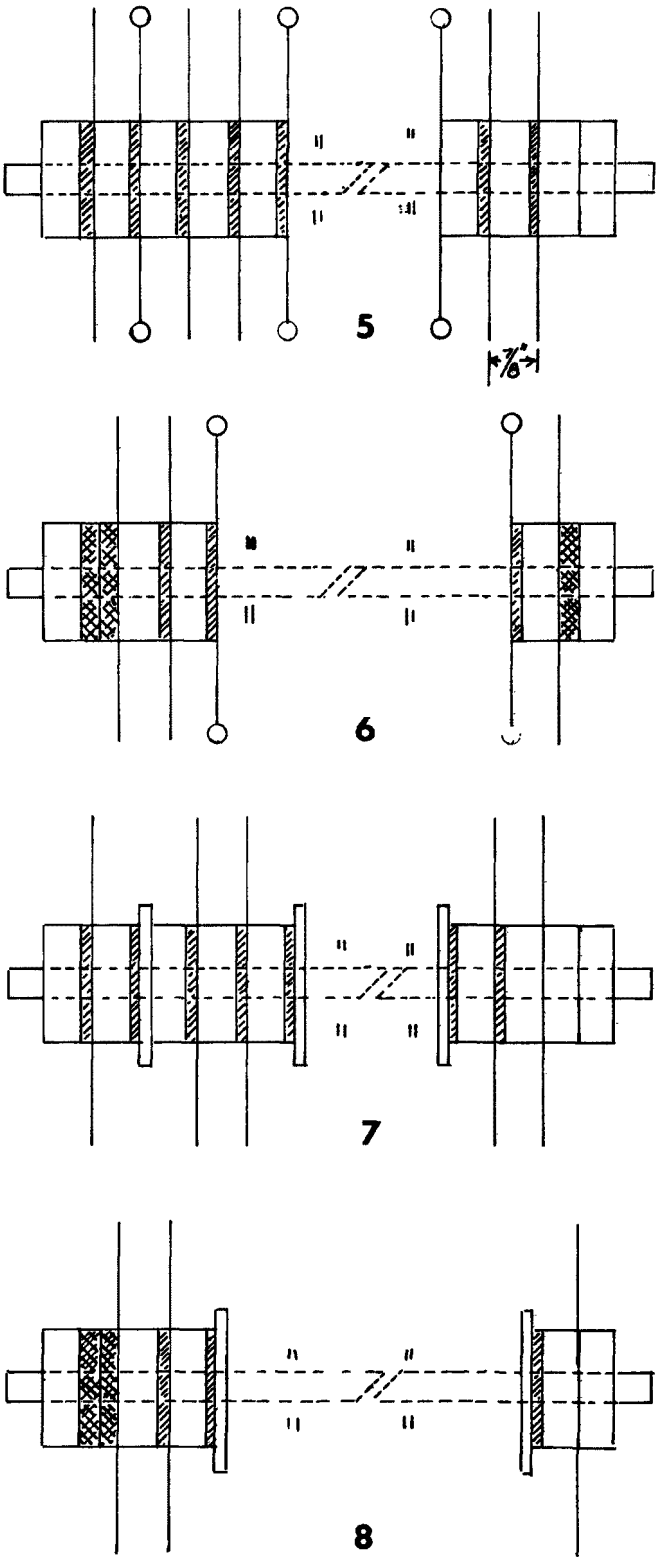

Figure 11. SPINDLE CONFIGURATIONS 5 THROUGH 8

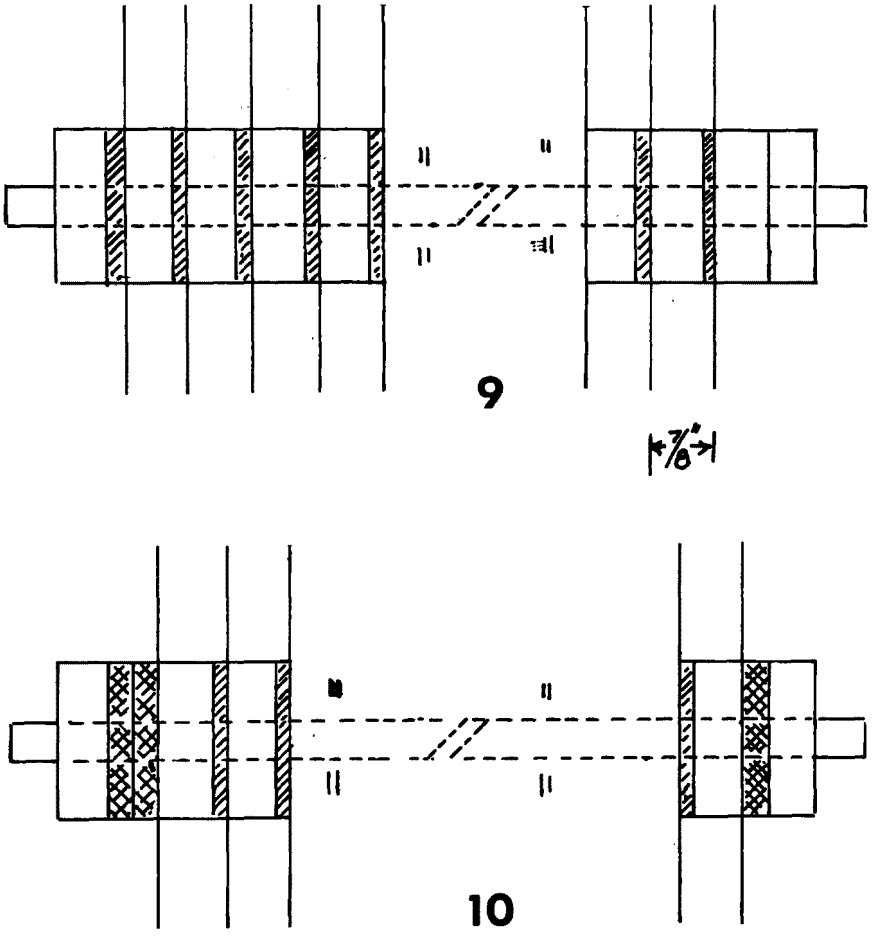

Figure 12. SPINDLE CONFIGURATIONS 9 AND 10

TABLE 1

SEQUENCE OF SPINDLE CONFIGURATIONS USED FOR THE SHAFT POSITIONS OF PEEL REMOVAL UNIT

Shaft Position Number	SEQUENCE B Spindle Configuration*	SEQUENCE C Spindle Configuration*	SEQUENCE E Spindle Configuration*
1	6	10	3
2	7	7	3
3	8	8	3
4	5	9	4
5	6	10	3
6	5	9	3
7	8	8	3
8	7	7	4
9	6	10	3
10	5	9	3
11	6	10	3
12	7	7	4
13	8	8	3
14	5	9	3
15	6	10	3
16	5	9	4
17	8	8	3
18	7	7	3
19	6	10	3
20	5	9	4
21	6	10	3
22	7	7	3
23	8	8	3
24	5	9	4
25	6	10	3
26	5	9	3
27	8	8	3
28	7	7	4
29	6	10	3
30	5	9	3

TABLE I (Cont'd.)

Shaft Position Number	SEQUENCE B Spindle Configuration *	C Spindle Configuration *	E Spindle Configuration *
31	6	10	3
32	7	7	4
33	8	8	3
34	6	10	3
35	5	9	3
36	6	10	4
37	8	8	3
38	7	7	3
39	6	10	3

* See Figures 8 through 10

designated by number 4. The spindle sequences using a combination of different spindle configurations to fill the 39 shaft slots were designated B, C, and E and are identified in Table I. The shaft position numbers start with 1 at the feed end.

SECTION VI

OPERATIONAL AND EVALUATION PHASE

Peeling of Peach Halves

The major effort in this study of peeling certain tree fruit was concentrated on evaluation of peel removal from peach halves. The bulk of peaches harvested for processing are peeled before preservation.

The work on peach peeling was accomplished in a commercial cannery in Richmond, California. This was done for several reasons. The cannery location provided adequate supplies of peaches of commercial grade, pitted with conventional equipment, and potentially returnable to production. Experienced plant personnel were available to provide estimates of the quality of peeled peach halves. Also, commercial scale equipment was available for use in applying sodium hydroxide solution.

The equipment used is shown schematically in Figure 13. The experimental peeling of peach halves was conducted in the following manner. Peach halves from the Filper pitting machines were placed in 5 gal., stainless steel pans and the peach weight was measured. The peach halves were dumped into an elevator which delivered them to a cup down shaker. The oriented peaches were conveyed through a commercial sodium hydroxide solution applicator. The coated peach halves were drained of excess sodium hydroxide solution and delivered by a sheet metal trough to the peel removal unit. The peach halves moved through the unit and dropped down a chute at the exit end into a surge tank filled with water. The submerged peaches were removed from the surge tank by an elevator with a 45 degree pitch into tared receivers. One to three spray heads provided a rinsing of the peaches in the elevator before delivery into the tared containers. The fresh water introduced at the spray heads drained into the surge tank as make-up water. The surge tank was fitted with an overflow pipe which emptied into containers for volume measurement and wastewater sample collection. The peeled peaches were examined for peeling quality by visual inspection, weighed, and returned to the Filper pitter discharge flume to be used in commercial production.

A large number of preliminary experiments of short duration were used to determine good operating conditions. The results of these experiments are tabulated in Table A-1 in the Appendix. The major variables

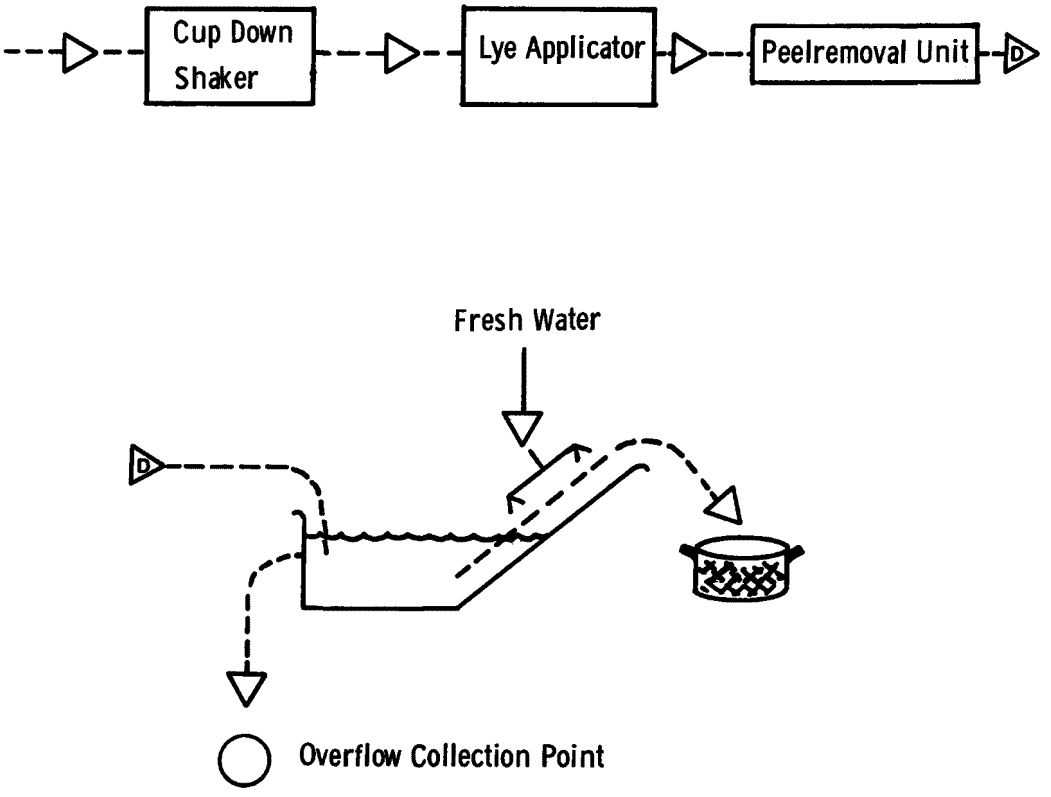

Figure 13

SCHEMATIC DRAWING OF EXPERIMENTAL PEACH PEELING

studied during the preliminary runs were: sodium hydroxide concentration, sodium hydroxide bath temperature, residence time of peach halves in sodium hydroxide applicator, draining time for coated peach halves, peeling disk type and spacing, feed rate, peel removal section slope and disk turning speed.

Table 2 summarizes the results of longer duration peeling experiments with peach halves using the best operating conditions developed during preliminary, short duration experiments. Peeling losses were determined in 3 minute runs using conditions identical to those used in the runs of approximately one hour duration.

TABLE 2

RESULTS OF PEACH HALVE PEELING USING ROTATING RUBBER DISK PEEL REMOVAL UNIT

Run No.	Feed Rate lb/hr	NaOH Strength, Percent	Peel Removal Unit Slope, in./10 ft	Peeled Fruit Quality	Peeling Loss, Percent
8-21-2*	4119	1.5	15		N.M. ***
8-21-1A	4286			Good	5.1
8-21-2**	4647	1.5	9	Fair	N.M.
8-21-2A	4996				4.7

* Duration of run was 61 minutes
** Duration of run was 56.3 minutes
*** N.M. = Not measured

Table 3 tabulates the water volume used in rinsing peeled peach halves and analytical values measured on wastewater samples.

For comparative purposes, wastewater samples were collected from the commercial peach half peeling unit (see Figure 15) and analyzed. The results are tabulated in Table 4.

The wastewater overflow from the surge tank was collected in a 55 gal. drain. A one gal. sample was removed from the drain at 15 min intervals after mixing the contents of the drain. A composite sample was prepared by mixing 0.5 gal. portions of each of the 15 min grab samples.

TABLE 3

RINSE WATER VOLUME AND WASTEWATER CHARACTERISTICS FOR PEACH HALVE PEELING

Run No.	Rinse Water Rate gal./hr	Rinse Water Rate gal./ton	Wastewater Sample*	Wastewater Quality C.O.D., ppm	Wastewater Quality SS, ppm	Wastewater Quality pH
8-21-1	75	36	15 G	30,000	7,200	9.4
			30 G	60,000	12,400	9.7
			45 G	63,300	7,300	9.8
			60 G	97,400	12,480	9.7
			61 C	75,700	10,850	9.7
8-21-2	77	33	15 G	30,000	7,200	9.4
			30 G	53,900	10,150	9.4
			45 G	69,100	12,600	9.6
			56 G	63,300	18,400	9.7
			56 C	50,200	9,750	9.5

* Time in minutes, G=grab, C=composite.

Peeling of Whole Pears

The peeling of whole Bartlett pears was conducted at two locations. A limited number of short duration peeling experiments with pears was run in the commercial cannery with the sodium hydroxide applicating equipment used for the peach halve peeling. It was too difficult and potentially dangerous to personnel to obtain sodium hydroxide treated pears from the commercial equipment in the cannery. The commercial peeler has a pressurized section following the sodium hydroxide application zone. The pears are conveyed through an air-lock from the pressure section to a lowerator which delivers the partially peeled pears to a flume. Removing pears from the lowerator was judged by the Project Director to be hazardous due to the restricted clearance between lowerator flights and sidewalls which could catch and break hands and arms. Beyond this consideration of safety, the treated pears at this point had lost considerable portions of their peel and were not the best material for peeling experiments.

TABLE 4

WATER VOLUME REQUIREMENTS AND WASTEWATER CHARACTERISTICS FOR COMMERCIAL CLING PEACH PEELER

Fresh Water Input gal./ton	Wastewater Sampling Point*	Wastewater Measurements			
		Volume, gal./ton	C.O.D., ppm	SS, ppm	pH
600	1	400	5,300	1230	11.3
	2	200	19,600	2430	10.2
540	1	360	5,600	1060	11.6
	2	180	16,700	1280	10.3
580	1	387	5,100	780	11.1
	2	193	6,600	1950	10.1
525	1	350	5,900	1150	11.1
	2	175	23,000	3080	10.1
460	1	307	5,100	1320	11.0
	2	153	30,000	5640	10.7
515	1	347	5,100	1540	11.2
	2	168	25,100	5640	10.7
470	1	313	4,900	910	11.3
	2	157	31,700	5240	10.7
Ave. 527	-	527	13,550	2375	10.8

* See Figure 15

Results obtained for pear peeling at the cannery are tabulated in Table A-2 in the Appendix. More extensive experimental peeling of pears was conducted at the USDA Laboratory in Albany, California. A screw drive sodium hydroxide applicator unit was used for these experiments with which adequate residence times could be achieved. The results of these peeling experiments are tabulated in Table A-3.

The rinsewater volume used in Run 10-28-1 of Table A-3 was 89 gal. per ton and the wastewater had a C.O.D. of 10,500 ppm, a SS content of 2550 ppm and a pH of 10.6. The rinse water for the pear peeling consisted of two tanks each containing 20 gal. of water. Analysis was made on a composite sample of water from the two rinse tanks.

For comparison purposes, wastewater from a commercial pear peeling unit (see Figure 14) was collected and analyzed. The pH was 10.5, the C.O.D. was 5040 ppm. The rinse water volume was estimated as about 200 gal./ton of fresh pears.

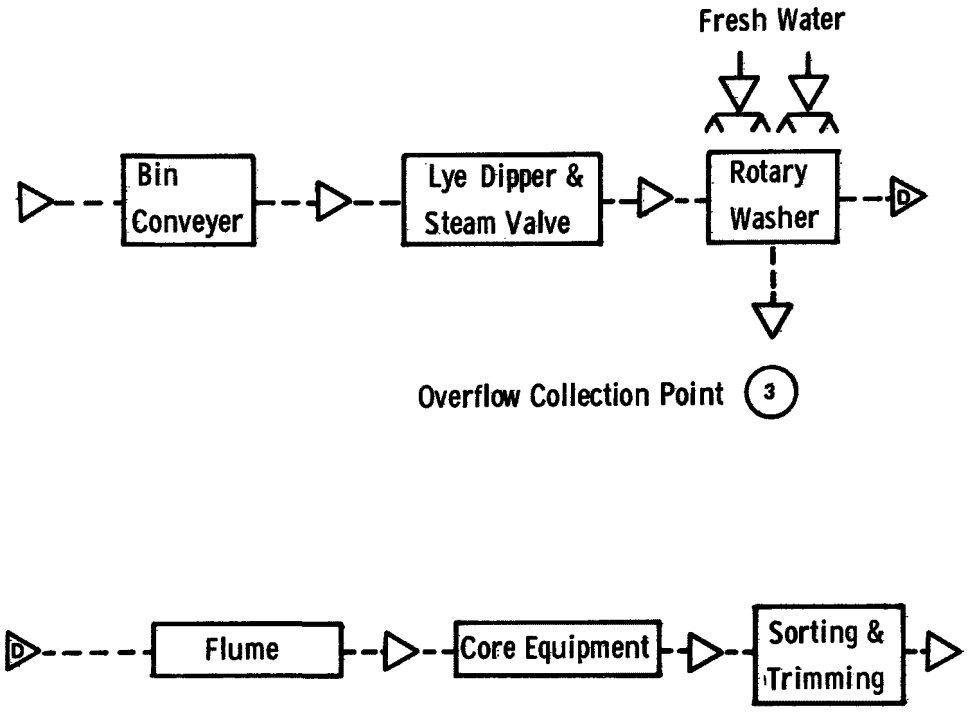

Figure 14

SCHEMATIC DRAWING OF COMMERCIAL PEAR PEELING

Three facets of pear peeling were examined during the project. The sizing and firmness of pears are important considerations in their peeling performance by the methods used at the present time. Measurements of size distribution of pears peeled successfully were made to provide industry specialists with information which they could correlate with their experience using conventional peeling equipment. The size distribution of a typical lot of pears is tabulated in Table 5.

Another important factor in pear peeling by conventional methods is the firmness of the pears. Firmness is measured by reading the force necessary to insert a rod into a pear to a standard depth, at a point where the skin has been removed with a knife. The results of the penetration testing of a lot of 33 pears typical of those used in the experimental peeling are tabulated in Table 6.

TABLE 5

CROSSECTIONAL SIZE DISTRIBUTION OF PEARS

Size, In.	Percent Present in Lot	Size, In.	Percent Present in Lot
2 3/16	3	2 11/16	6
2 1/4	10	2 3/4	3
2 5/16	10	2 13/16	1
2 3/8	16	2 7/8	0
2 7/16	15	2 15/16	0
2 1/2	21	3	1
2 9/16	6		
2 5/8	8	Total	100

The results of the firmness testing indicated that the pears used were in the normal range for successful commercial peeling.

TABLE 6

FIRMNESS TESTING OF PEARS

Penetration Force, lb	Number of Pears Penetrated	Distribution Percent
2- 2.9	4	12.1
3- 3.9	4	12.1
4- 4.9	6	18.2
5- 5.9	6	18.2
6- 6.9	5	15.2
7- 7.9	3	9.1
8- 8.9	3	9.1
9- 9.9	1	3.0
10- 10.9	1	3.0
Totals	33	100.0

The peel material which is wiped from the fruit as a sludge drops to the bottom of the peel removal unit tray and can drain (or can be scraped) counterflow to the peeled fruit. The peeling sludge can be handled as a solid waste material. As disposal of solid waste in land

more difficult in the future due to lack of appropriate sites, the peel sludge has potential as a component of animal feed. A limited amount of information on the composition of the peeling sludge was obtained during the project. The weight of the sludge is approximately represented by the peeling loss. No direct measure of peeling sludge weight was possible, due to the disposition of part of this material on the walls of the equipment. It was impractical to determine the weight of deposited peel sludge as well as to account for losses of material discharged by centrifugal force from the peeling disks.

Values for the content of sodium hydroxide and sodium carbonate in the pear peeling sludge are tabulated in Table 7.

TABLE 7

SODIUM HYDROXIDE AND SODIUM CARBONATE CONTENT OF PEAR PEELING SLUDGE

Sampling Date	Solids, Percent	NaOH Wet Wt. Percent	Na_2CO_3 Wet Wt. Percent
9-29-1	27.3	3.8	2.6
9-29-2	27.0	2.1	2.4
9-30-1	23.6	2.0	1.8
9-30-2	20.8	0.6	1.4
10- 1-1	21.6	1.7	1.6
10- 1-2	18.4	0.3	0.9
10- 5-1	22.4	1.7	1.3
10- 6-1	22.2	1.1	1.4
10-13-1	28.5	3.8	2.5
10-13-2	24.0	1.88	2.3
10-14-4	24.9	2.9	1.8
10-14-5	20.2	1.2	1.2
10-28-1	23.5	2.2	2.3
Average	23.4	1.9	1.8

Peeling of Whole Apricots

A number of short term peeling experiments were completed at the USDA Laboratory in Albany, California using Blenheim and Tilton

apricots obtained from local canneries.

Due to the delay in delivery of vulcanized rubber peeling disks, time allocated to construction of a spray rinsing section was diverted to assembling peeling disks by hand. The rinsing of peeled apricots was by simple submersion in fresh water contained in a tank. The wastewater generated was considered as not representative of wastewater from a spray rinsing unit. Therefore no wastewater samples from apricot peeling experiments were collected.

The results obtained during the peeling of Blenheim apricots are tabulated in Table A - 4 in the Appendix. The results obtained during the peeling of Tilton apricots are tabulated in Table A - 5 in the Appendix.

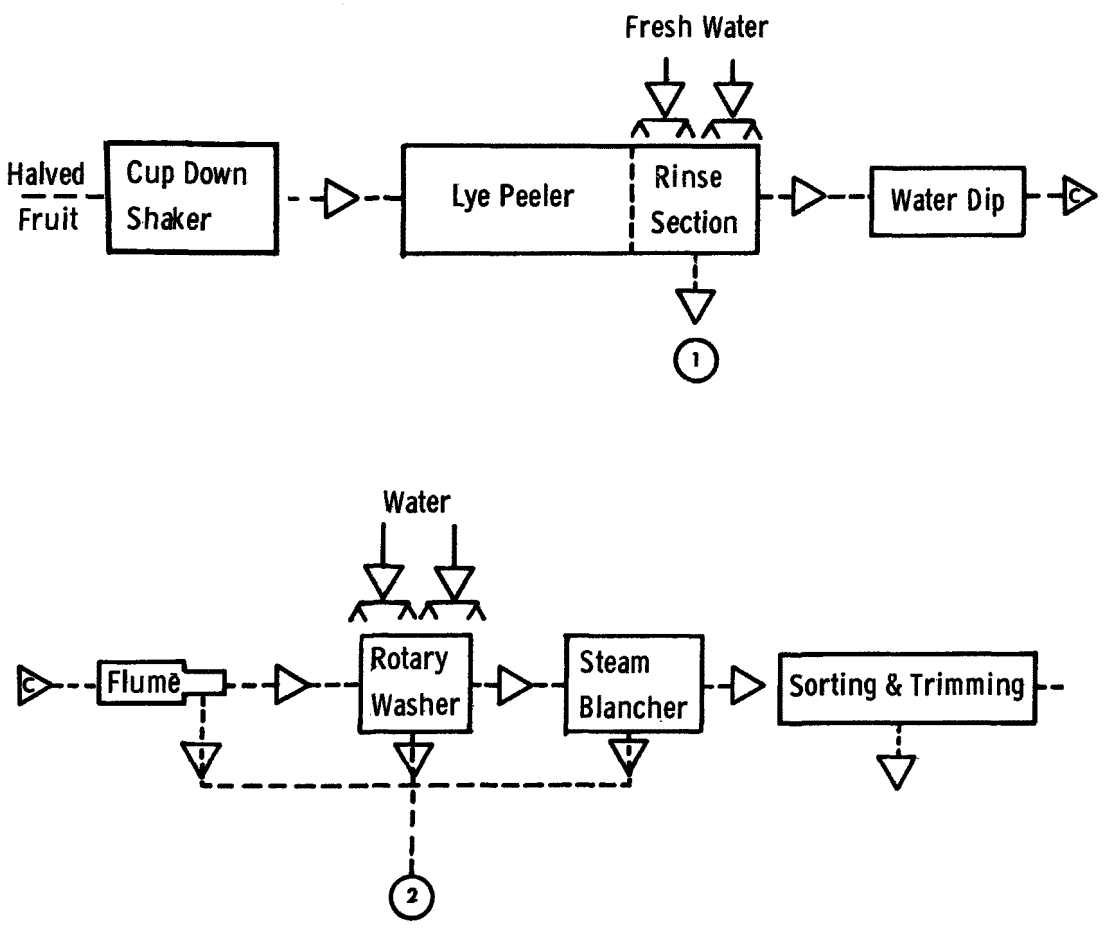

Figure 15

SCHEMATIC DRAWING OF COMMERCIAL PEACH PEELING

SECTION VII

DISCUSSION

The operation of the peel removal equipment demonstrated on a substantial scale (one to two tons of raw fruit per hour) that peach halves can be peeled efficiently by the low water volume peeling process. The quality of the peeled fruit was as good or better than that of fruit from commercial peeling units as judged by experienced industry people.

The peeling losses measured for the experimental unit were slightly lower than the peeling losses determined by measurement of commercial peeling. The difference in peeling losses was not large enough to provide an economic incentive based on higher product yield as is the case for the new potato peeling process.

The major advantage for the new method for peach peeling results from the lower water volume requirement and the reduction in the strength of wastewater generated.

A detailed study of fresh water requirements for rinsing and characterization of wastewater was made for peach half peeling only for the reason described in Section VI. The results of comparing commercial peeling and experimental peeling of peaches showed that the new peel removal method required only one-fifteenth of the fresh water used in conventional commercial peeling. The wastewater produced in the new peeling method was correspondingly reduced due to the use of mechanical abrasion for peel removal rather than water pressure. The strength of the wastewater from the experimental peeling of peaches was higher per unit volume than the wastewater from conventional chemical peeling. However, the much lower volume of wastewater produced per ton of fruit by the use of mechanical peel removal makes the lb of C.O.D. (and of B.O.D., although this was not measured directly) generated about one-third that of the conventional chemical peeling operation.

The numbers used to calculate values tabulated in Table 4 are derived from Tables 2 and A-1. The average of the two wastewater volumes and the average C.O.D. and SS of the two composite samples were used to calculate the values for the experimental peeler. The average values from Table 2 were used to calculate values for commercial

peeling. The contribution of the effluent from the blancher wastewater shown in Figure 15 to volume, C.O.D. and SS was estimated as less than 0.5 percent of the total and was not corrected for in the calculation.

A comparison of water usage, wastewater generation, and wastewater characteristics in commercial and experimental peeling of peach halves is tabulated in Table 8.

TABLE 8

COMPARISON OF
WASTEWATER CHARACTERISTICS FOR COMMERCIAL
AND EXPERIMENTAL PEELING OF CLING PEACH HALVES

Peeler	WASTEWATER DISCHARGED (PER TON PITTED PEACHES) Volume, gal.	C.O.D., lb.	SS, lb.
Commercial	527	59.5	10.4
Experimental	34.5	18.1	3.0

The results of the longer-duration pear peeling experiments are summarized in Table 9.

Pre-Treatment of Unpeeled Pears

Several treatments of unpeeled pears before the application of sodium hydroxide solution were investigated to improve peeling efficiency and to reduce peeling losses. The results of these experiments are tabulated in Table A-3.

Dewaxing of whole pears by immersion in 2-propanol held at 165°F reduced the peeling loss, but the quality of the peeled fruit was poorer due to residual peel fragments. It was concluded that hot or cold dewaxing of pears did not improve peeling sufficiently to justify the extra operation which would be required.

In the final pear peeling experiments it was found that placing 1/4in. stainless steel bars across the peeling tray parallel to the spindles

TABLE 9

RESULTS OF WHOLE BARTLETT PEAR PEELING USING ROTATING RUBBER DISK PEEL REMOVAL UNIT

Run No.	Feed Rate, lb/hr	NaOH Strength Percent	Peeled Fruit Quality	Peeling Loss, Percent
10- 2-1*	170	15.2	Good to Poor	11.3
10-16-4**	2050	17.3	Good	20.4
10-28-1***	1786	17.0	Good	15.8

*13.0 minute run
**12.3 minute run
***30.1 minute run

wiped a substantial portion of softened flesh from the pear surfaces (see Figure 9). This modification of the peeler unit had considerable promise in diverting organic material coating peeled tree fruit from the wastewater to the solid residue fraction.

Peeling Losses

Peeling losses were determined for the experimental peel removal unit and a commercial unit for each of the three fruits studied. The data collected during the peeling loss determinations is tabulated as a range of values in Table 10.

TABLE 10

PEELING LOSSES FOR TREE FRUIT

Commodity	Peeling Loss, Percent	
	Experimental	Commercial
Apricots	3.7 - 8.3	6.4 - 9.3
Peaches	5.3 - 7.5	5.5 - 8.0
Pears	11 - 20	12 - 15

Cost Estimate

The next logical step in demonstrating the utility of "dry caustic" peeling of tree fruit would be a five-fold scale up to a unit with a capacity of 10 tons of fruit per hour. The estimated capital cost of the peel removal section of a ten ton per hour capacity unit is $16,000.

SECTION VIII

ACKNOWLEDGEMENTS

The collaboration in this project by Robert P. Graham, Mark R. Hart, Gerald S. Williams, and others of the Engineering and Development Laboratory, Western Utilization Research and Development Division, Agriculture Research Service, United States Department of Agriculture, was instrumental in developing the results reported.

The cooperation, interest and assistance of many individuals associated with the canning industry is gratefully acknowledged: we especially thank E. L. Mitchell, W. L. Doucett, Ernest Johnson, R. Lovelace, S. Platou, S. M. Anderson, R. Ketcher and L. K. Taber.

We appreciate the advice offered by Kenneth A. Dostal of WQO of EPA during this project, and especially for help in preparation of the final report.

The following project team from NCA made contributions to the collection of the data tabulated in this report:

Harry J. Maagdenberg
Nabil L. Yacoub
Karen Kemper
Carol Barnes

Valuable contributions to the reporting of the results of the project were made by:

Edwin S. Doyle
Stuart Judd
William Murray

Walter A. Mercer
Grant Director

Jack W. Ralls
Project Director

SECTION IX

REFERENCES

1. Mercer, W.A.; Rose, W.W.; and Doyle, E.S.; Physical and chemical characterization of the fresh water intake, separate in-plant waste streams and composite waste flows originating in a cannery processing peaches and tomatoes, Res. Report No. D-1612, prepared for the State of California Water Quality Control Board (March, 1965).

2. Anon., Preliminary data, National Canners Association, Food Canning Wastes

3. Spicher, P.G.: Agardy, F.J.; and Orlob, G.T.; Proc. 22nd Ind. Waste Conference, 1967, Part I, p. 44, Purdue University, Lafayette, Indiana.

4. Graham, R.P.; Huxsoll, C.C.; Hart, M.R.; Weaver, M.L.; and Morgan, A.I. Jr.; Prevent Potato Peel Pollution, Food Engineering, June, 1969.

5. Graham, R.P.; Huxsoll, C.C.; Hart, M.R.; Weaver, M.L.; and Morgan, A.I., Jr.; "Dry" Caustic Peeling of Potatoes, Food Technology 23 (2), 61-66, (1969).

6. Smith, T., Proceedings, National Symposium on Food Processing Wastes, Portland, Oregon, April, 1970, pages 359-361.

7. Graham, P.P., Ibid. pages 355-358.

8. Dostal, K.A., Secondary Treatment of Potato Processing Wastes, Final Report, Report No. FR-7, U.S. Department of the Interior, FWPCA, Pacific Northwest Water Laboratory, Corvallis, Oregon 97330, July, 1969.

9. Hart, M.R.; Graham, R.P.; Huxsoll, C.C.; and Williams, G.S.; An Experimental Dry Caustic Peeler for Cling Peaches and Other Fruit, 30th Annual Meeting, Institute of Food Technologists, San Francisco, California, May 25, 1970, Paper No. 59.

10. Hart, M.R.; Graham, R.P.; Huxsoll, C.C.; and Williams, G.S.; An Experimental Dry Caustic Peeler for Cling Peaches and other Fruit. J. Food Sci. 35 (6), 839-41 (1970).

11. Anon. ASTM Standard Methods, Part 9, page 1303. Tentative Method for Indentation of Rubber by Means of a Durometer, 1958.

SECTION X

PATENTS AND PUBLICATIONS

The USDA has applied for a Public Service Patent in the United States of America for the process of removing fruit peel by the action of rotating rubber disks.

The first public presentation of the results of the research done under Grant 12060FQE was at the Second National Symposium on Food Waste Treatment Research, Denver, Colorado, March 23-25, 1971.

SECTION XI

APPENDICES

Table No.		Page
A - 1	Results of Rotating Disk Peel Removal From Mixed Size Dixon Variety Cling Peach Halves	42
A - 2	Results of Rotating Disk Peel Removal from Sized Whole Bartlett Pears	46
A - 3	Results of Rotating Disk Peel Removal from Mixed Size Whole Bartlett Pears	47
A - 4	Results of Short Duration Peeling Experiments on Mixed Size Blenheim Apricots	50
A - 5	Results of Short Duration Peeling Experiments on Mixed Size Tilton Apricots	51

TABLE A-1

RESULTS OF ROTATING DISK PEEL REMOVAL FROM MIXED SIZE DIXON VARIETY CLING PEACH HALVES

Run No. *	8-10-1	8-10-2	8-11-1	8-11-2	8-11-3	8-12-1
NaOH Conc., %	1.3	1.4	1.2	1.3	1.3	1.4**
Disk Rotating Speed, RPM	373	373	373	373	N.A.	N.A.
Peeler Slope, in./10 ft	14	14	14	14	N.A.	N.A.
Feed, lb	232.5	221.2	221.1	227.7	269.3	226.9
Feed Time, Sec	135	225	N.A.	180	180	180
Feed Rate, lb /hrs	6200	3550	4422	4460	5380	4540
Peeled Weight, lb	220.1	208.9	N.A.	212.8	N.A.	N.A.
Washed Weight, lb	219.0	206.8	209.9	211.4	252.8	N.A.
Total Peel Loss, %	5.8	6.51	N.A.	5.03	6.1	2.4
Spindle Sequence	B	B	B	B	B	B
Gears Used	S	S	S	S	S	N.R.
Peeled Fruit Quality	Fair	Fair	Fair	Fair	Fair	N.A.
Rinse Water, gal.	19.5	19.1	29.2	N.R.	N.R.	N.R.
Rinse Water, gal./ton	168	173	264	N.R.	N.R.	N.R.
Wastewater pH	7.0	7.8	N.R.	N.R.	N.R.	N.R.
Wastewater C.O.D., ppm	4814	5222	N.R.	N.R.	N.R.	N.R.
Wastewater SS, ppm	830	1120	N.R.	N.R.	N.R.	

* NaOH Dip Time was 10 sec at 200°F for all runs.
** NaOH Treatment Only

TABLE A-1 (Cont'd.)

Run No.	7-27-1	7-27-2	7-27-3	7-29-1	7-29-2	7-29-3
NaOH Conc., %	2.7	2.4	2.5	2.8	3.8	4.4
Disk Rotating Speed, RPM	373	373	373	373	373	373
Peeler Slope, in./10 ft	16	16	16	16	16	16
Feed, lb	89.2	89.8	89.6	146.5	152.5	148.0
Feed Time, Sec	90	90	90	150	150	150
Feed Rate, lb /hrs	3600	3600	3600	3600	3600	3600
Peeled Weight, lbs	74.8	81.4	80.6	137.6	142.7	137.0
Washed Weight, lb	75.6	79.4	79.8	135.9	139.9	135.2
Total Peel Loss, %	16.1	11.3	10.9	7.3	8.2	8.5
Spindle Sequence	D	D	D	D	D	D
Gears Used	S	S	S	S	S	S
Peeled Fruit Quality	Fair	Fair	Fair	Fair	Fair	Fair
Rinse Water, gal.	N.R.	N.R.	N.R.	23.7	23.7	23.7
Rinse Water, gal./ton	N.R.	N.R.	N.R.	323	312	320
Wastewater pH	N.R.	N.R.	N.R.	N.R.	N.R.	N.R.
Wastewater C.O.D., ppm	N.R.	N.R.	N.R.	N.R.	N.R.	N.R.
Wastewater SS, ppm	N.R.	N.R.	N.R.	N.R.	N.R.	N.R.

Run No.	7-29-A	7-29-5	7-29-6	7-29-7	8-7-1	8-7-2
NaOH Conc., %	2.3	4.8	3.7	4.0	2.3	1.5
Disk Rotating Speed, RPM	373	---	---	373	373	373
Peeler Slope, in./10 ft	16	---	---	16	16	16
Feed, lb	89.6	143.3	138.6	145.0	232.9	222.0
Feed Time, Sec	60	150	150	150	270	270
Feed Rate, lb /hrs	5380	3440	3330	3480	3100	3100
Peeled Weight, lb	84.7	141.0	---	134.4	214.2	---
Washed Weight, lb	83.9	---	138.6	132.3	214.2	205.5
Total Peel Loss, %	6.5	---	---	8.7	8.0	7.4
Spindle Sequence	D	D	D	B	B	B
Gears Used	S	---	***	S	S	S
Peeled Fruit Quality	Fair	**	Fair	Fair	Fair	Fair
Rinse Water, gal.	20.7	---	---	23.7	20.3	20.3
Rinse Water, gal./ton	461	---	---	328	174	183
Wastewater pH	---	---	---	---	7.0	6.4
Wastewater C.O.D., ppm	---	---	---	---	4,360	7,930
Wastewater SS, ppm	---	---	---	---	560	1390

** NaOH Treatment only
*** Through reel washer

TABLE A-1 (Cont'd.)

Run No.	8-12-2	8-12-3	8-12-4	8-13-1	8-13-2	8-14-1
NaOH Conc., %	1.6	1.4	1.4	1.7	1.8	1.7
Disk Rotating Speed, RPM	266	266	373	373	373	373
Peeler Slope, in./10 ft	11	11	11	11	6	6
Feed, lb	230.7	211.8	208.7	218.5	224.0	219.1
Feed Time, Sec	180	180	180	135	135	135
Feed Rate, lb/hr	4620	4240	4180	5800	5970	5950
Peeled Weight, lb	221.9	203.6	197.5	207.2	207.6	207.0
Washed Weight, lb	219.3	201.1	298.2	206.9	208.5	204.2
Total Peel Loss, %	4.9	5.1	5.4	5.3	7.32	6.80
Spindle Sequence	B	B	B	B	B	B
Gears Used	S	S	S	S	S	S
Peeled Fruit Quality	Good	Fair-Poor	Fair-Poor	Good	Good	Good
Rinse Water, gal.	N.R.	N.R.	N.R.	19.1	19.1	19.1
Rinse Water, gal./ton	N.R.	N.R.	N.R.	175	171	175
Wastewater pH	N.R.	N.R.	N.R.	N.R.	N.R	7.1
Wastewater C.O.D., ppm	N.R.	N.R.	N.R.	N.R.	N.R.	4088
Wastewater SS, ppm	N.R.	N.R.	N.R.	N.R.	N.R.	640

Run No.	8-14-2	8-14-3	8-18-1	8-18-2	8-19-1	8-19-2
NaOH Conc., %	1.7	1.6	1.6	1.7	1.4	1.4
Disk Rotating Speed, rpm	373	373	373	373	373	373
Peeler Slope, in./10 ft	6	0	15	15	15	15
Feed, lb	217.3	211.3	229.7	219.4	227.2	228.8
Feed Time, Sec	90	90	180	135	180	180
Feed Rate, lb /hr	8770	8450	4594	5851	4544	4576
Peeled Weight, lb	208.1	203.9	217.0	207.5	215.4	218.6
Washed Weight, lb	204.8	200.4	215.2	205.3	215.7	216.4
Total Peel Loss, %	6.0	5.2	6.3	6.4	5.2	5.4
Spindle Sequence	B	B	A	A	A	A
Gears Used	S	S	S	S	S	S
Peeled Fruit Quality	Good	Good	Good	Good	Good	Good
Rinse Water, gal.	19.6	19.6	20.9	20.4	21.1	21.1
Rinse Water, gal./ton	181	186	182	186	186	185
Wastewater pH	8.2	7.5	7.7	7.9	5.0	4.9
Wastewater C.O.D., ppm	5222	4696	4817	6072	3413	6168
Wastewater SS, ppm	1070	970	860	1150	840	1630

TABLE A-1 (Cont'd.)

Run No.	8-19-3	8-20-3	8-21-1	8-21-1A	8-21-2	8-21-2A
NaOH Conc., %	1.4	1.4	1.5	1.5	1.3	1.3
Disk Rotating Speed, rpm	373	373	373	373	373	373
Peeler Slope, in./10 ft	15	15	15	15	9	9
Feed, lb	225.4	215.7	241.8	214.3	243.6	219.8
Feed Time, Sec	180	180	3660	180	3380	180
Feed Rate, lb /hr	4508	4314	4119	4286	4647	4396
Peeled Weight, lb	212.3	206.7	N.R.	205.3	N.R.	211.5
Washed Weight, lb	212.8	205.3	3974	203.3	4154.8	209.4
Total Peel Loss, %	5.8	4.8	N.R.	5.1	N.R.	4.7
Spindle Sequence	B	B	B	B	B	B
Gears Used	S	S	S	S	S	S
Peeled Fruit Quality	Good	Good	Good	Good	Fair	Fair
Rinse Water, gal.	21.1	N.R.	75.7	N.R.	72.2	N.R.
Rinse Water, gal./ton	187	N.R.	35.6	N.R.	33	N.R.
Wastewater pH	5.5	N.R.	9.7	N.R.	9.5	N.R.
Wastewater C.O.D., ppm	5099	N.R.	75,700	N.R.	50,200	N.R.
Wastewater SS, ppm	1220	N.R.	10,850	N.R.	9,750	N.R.

Run No.	8-31-6	8-31-7	9-1-1	9-1-1A	9-2-1	9-2-1A
NaOH Conc., %	1.5	1.5	2.5	2.5	2.0	2.0
Disk Rotating Speed, rpm	373/322	373/800	369	369	369	369
Peeler Slope, in./10 ft	15	15	15	15	15	15
Feed, lb	212.1	229.8	5282	258.8	5333	259.3
Feed Time, Sec	180	180	3600	180	3600	180
Feed Rate, lb/hr	4240	4590	5282	5170	5333	5180
Peeled Weight, lb	203.0	218.3	N.R.	243.3	N.R.	242.4
Washed Weight, lb	177.0	217.3	4822	236.4	4960.1	241.1
Total Peel Loss, %	6.7	5.4	N.R.	6.6	N.R.	7.0
Spindle Sequence	C	C	C	C	C	C
Gears Used	S	S	S	S	S	S
Peeled Fruit Quality	Good	Good	Good	Good	Good	Good
Rinse Water, gal.	N.R.	N.R.	77.1	N.R.	68.3	N.R.
Rinse Water, gal./ton	N.R.	N.R.	29.2	N.R.	25.6	N.R.
Wastewater pH	N.R.	N.R.	6.6	N.R.	6.0	N.R.
Wastewater C.O.D., ppm	N.R.	N.R.	29,606	N.R.	6990	N.R.
Wastewater SS, ppm	N.R.	N.R.	7140	N.R.	1640	N.R.

TABLE A-2

RESULTS OF ROTATING DISK
PEEL REMOVAL FROM SIZED WHOLE
BARTLETT PEARS

Run No. *	9-16-2	9-16-3	9-16-4	9-17-2	9-17-3
NaOH Conc., %	21.1	21.1	21.12	21.9	21.9
Peeler Slope, in./10 ft	15	15	15	20	20
Feed, lb	39.7	39.8	36.9	38.4	37.3
Feed Time, Sec	153	93	83	92	83
Feed Rate, lb /hr	1022	1795	2660	2513	2685
Peeled Weight, lb	33.0	31.1	31.0	30.3	27.0
Washed Weight, lb	32.6	31.6	30.1	29.3	25.1
Total Peel Loss, %	7.1	8.7	6.8	9.1	12.2
Disk Spacing, in.	1	1	1	1	1
Gears Used	S	S	S	S	S
Rinse Water, gal.					
Fruit Size	5	4	4	5	3

* The disk rotating speed was 369 RPM, spindle sequence was E, and the sodium hydroxide bath temperatures 178°F for all runs.

TABLE A-3

RESULTS OF ROTATING DISK PEEL REMOVAL FROM MIXED SIZE WHOLE BARTLETT PEARS

Run No.	9-30-2	9-30-3	10-1-1	10-1-2	10-1-3	10-1-4
NaOH Conc., %	16.7	16.7	15.8	15.8	15.8	15.8
NaOH Temp. °F	165	165	165	165	165	165
Disk Rotating Speed, rpm	369	369	369	369	369	369
Feed, lb	77.1	77.2	74.5	91.6	118.6	73.0
Feed Time, Sec	120	120	120	150	180	120
Feed Rate, lb/hr	2313	2316	2235	2198	2372	2190
Peeled Weight, lb	66.9	62.9	56.2	71.6	111.2	64.8
Washed Weight, lb	65.0	61.25	54.65	69.45	107.6	63.8
Total Peel Loss, %	15.7	20.7	26.6	24.2	9.3	12.6
Peeled Fruit Quality	Good	Good	Good	Good	Poor	Good
Rinse Water, gal.	16.0	16.0	16.0	16.0	16.0	16.0
Rinse Water, gal./ton	415	415	430	350	270	438
Wastewater pH	9.0	9.0	7.0	8.3	9.6	N.R.
Wastewater C.O.D., ppm	6360	4960	6031	5436	10714	N.R.
Wastewater SS, ppm	1500	1050	810	1120	2600	N.R.
2-Propanol (175 °F)						
Dip Time, Min	0	0	0	0	0	0
NaOH Dip Time, Sec	145	170	175	137	127	145

Run No.	10-5-6	10-6-1	10-6-2	10-6-3	10-6-4	10-6-5
NaOH Conc., %	16.2	16.8	16.8	16.5	16.5	16.5
NaOH Temp., °F	165	165	165	165	165	165
Disk Rotating Speed, rpm	369	369	369	369	369	369
Feed, lb	77.0	79.8	78.55	78.5	78.35	76.15
Feed Time, Sec	145	125	155	120	128	120
Feed Rate, lb/hr	2053	2335	2417	2355	2260	2284
Peeled Weight, lb	64.4	66.3	69.3	68.4	66.5	63.1
Washed Weight, lb	62.2	64.4	66.95	65.8	64.6	61.4
Total Peel Loss, %	19.5	19.3	14.8	16.2	17.5	19.4
Peeled Fruit Quality	Good	Good	Good	Good	Good	Good
Rinse Water, Gal.	16.0	16.0	16.0	16.0	16.0	16.0
Rinse Water, gal./ton	416	402	407	407	409	420
Wastewater pH	9.0	9.0	9.2	9.3	8.9	8.6
Wastewater C.O.D., ppm	6000	5476	5555	7063	5000	4920
Wastewater SS, ppm	980	1210	1170	1500	1150	990
2-Propanol (165°F)						
Dip Time, Min	0	0	0	0	0	0
NaOH Dip Time, Min	155	124	152	152	152	152

TABLE A-3 (Cont'd.)

Run No.	10-6-6	10-12-1	10-12-2	10-12-3	10-12-4	10-12-5
NaOH Conc., %	16.5	18.8	18.8	18.2	18.2	18.3
NaOH Temp. °F	165	165	165	165	165	165
Disk Rotating Speed, rpm	369	369	369	369	369	369
Feed, lb	61.4	75.4	75.85	77.2	77.35	76.4
Feed Time, Sec	152	120	120	120	137	85
Feed Rate, lb/hr	2231	2262	2275	2316	2142	3667
Peeled Weight, lb	60.1	68.95	67.5	67.1	66.9	67.95
Washed Weight, lb	58.8	67.45	65.8	65.9	65.3	66.15
Washed Weight, lb	58.8	67.45	65.8	65.9	65.3	66.15
Total Peel Loss, %	17.6	10.5	13.2	14.6	15.6	13.4
Peeled Fruit Quality	Good	Fair	Fair	Good	Good	Good
Rinse Water, gal.	16.0	16.0	16.0	16.0	16.0	16.0
Rinse Water, gal./ton	450	431	423	415	415	420
Wastewater pH	8.5	10.42	10.35	10.02	10.1	10.3
Wastewater C.O.D., ppm	3770	3515	3180	2840	2800	3100
Wastewater SS, ppm	670	1070	840	990	1200	1070
2-Propanol (165°F) Dip Time, Min	0	1	0	1	0	1
NaOH Dip Time, Sec	152	135	160	80	140	85

Run No.	10-13-1	10-13-2	10-13-3	10-14-4	10-14-5	10-14-6
NaOH Conc., %	17.0	16.8	16.8	16.8	16.8	16.8
NaOH Temp. °F	165	165	165	165	165	165
Disk Rotating Speed, rpm	369	369	369	369	369	369
Feed, lb	74.15	74.4	74.3	74.35	75.6	75.0
Feed Time, Sec	145	120	120	130	170	150
Feed Rate, lb/hr	1977	2232	2224	2124	1800	2368
Peeled Weight, lb	65.65	67.0	70.55	61.35	65.7	66.3
Washed Weight, lb	64.5	65.85	68.45	60.4	64.6	65.25
Total Peel Loss, %	12.8	11.5	7.9	18.8	14.7	13.0
Peeled Fruit Quality	Good	Good	Poor	Good	Good	Fair
Rinse Water, gal.	16.0	16.0	16.0	16.0	16.0	16.0
Rinse Water, gal./ton	432	431	431	431	423	426
Wastewater pH	10.0	10.1	10.4	9.55	9.75	9.80
Wastewater C.O.D., ppm	2260	3385	3720	2720	2720	2800
Wastewater SS, ppm	820	880	1p70	580	520	640
2-Propanol (165°F) Dip Time, Min	0	1	**	***	0	1
NaOH Dip Time, Sec	145	80	80-130	140	140	80

** Unpeeled pears dipped in 2-propanol at 62°F for 3 min and in second bath for 5.3 min.

*** Unpeeled pears blanched in hot water for one minute.

TABLE A-3

Run No.	10-15-1	10-15-2	10-15-4	10-16-4	10-28-1
NaOH Conc., %	17.1	17.1	17.2	17.3	17.0
NaOH Temp. °F	165	165	165	165	165
Disk Rotating Speed, rpm	369	369	369	369	369
Feed lb	37.25	73.25	76.05	211.3	895.5
Feed Time, Sec	N.R.	130	147	738	1805
Feed Rate, lb/hr	N.R.	2187	2444	2050	1786
Peeled Weight, lb	37.1	61.60	64.10	N.R.	N.R.
Washed Weight, lb	N.R.	61.50	63.4	168.9	753.6
Total Peel Loss, %	N.A.	16.04	16.6	20.4	15.8
Peeled Fruit Quality	N.R.	Good	Good	Good	Good
Rinse Water, gal.	16.0	N.R.	N.R.	N.R.	40.0
Rinse Water, gal./ton	860	N.R.	N.R.	N.R.	89
Wastewater pH	9.4	N.R.	N.R.	N.R.	10.58
Wastewater C.O.D., ppm	5480	N.R.	N.R.	N.R.	10,530
Wastewater SS, ppm	1140	N.R.	N.R.	N.R.	2550
NaOH Dip Time, Sec	145	145	140	115	N.R.

TABLE A-4

RESULTS OF SHORT DURATION
PEELING EXPERIMENTS ON MIXED
SIZE BLENHEIM APRICOTS

Run No. *	6-18-6	6-19-1	6-19-2	6-19-4	6-19-5
NaOH Conc., %	25-30	25-30	25-30	25-30	25-30
NaOH Temp. °F	210	150	140	160	150
Disk Rotating Speed, rpm	266	266	373	373	373
Peeler Slope, in./10 ft	-4	0	0	4	4
Feed, lb	60	30	30	30	30
Feed Time, Sec	240	90	35	90	90
Feed Rate, lb/hr	900	1200	3080	1200	1200
Peeled Weight, lb	53.9	27.6	29.3	26.3	27.3
Washed Weight, lb	42.7	25.0	27.5	25.3	26.1
Total Peel Loss, %	28.8	16.7	8.3	15.6	13.0
Gears Used	S**	S	S	D	D***
Peeled Fruit Quality	N.R.	N.R.	N.R.	N.R.	N.R.
Rinse Water, gal.	5.0	5.0	5.0	5.0	5.0
Rinse Water, gal./ton	167	333	333	333	333
NaOH Dip Time, Sec	33	70	70	70	70

* Spindle sequence was A in all runs.
**S Standard
***D Differential
N.R. Not recorded

TABLE A-5

RESULTS OF SHORT DURATION PEELING EXPERIMENTS ON MIXED SIZE TILTON APRICOTS

Run No. *	6-22-2	6-22-3	6-23-1	6-23-2	6-23-3	6-26-1
NaOH Conc., %	25-30	25-30	25-30	25-30	25-30	25-30
NaOH Temp. °F	210	210	210	210	210	210
Peeler Slope, in./10 ft	8	8	15	15	15	8
Feed, lb	30	30	45	60	30	45
Feed Time, Sec	120	120	120	60	40	40
Feed Rate, lb/hr	900	900	1350	3600	2700	2330
Peeled Weight, lb	26.3	26.7	40.8	57.1	28.4	41.3
Washed Weight, lb	26.2	26.2	40.5	53.8	26.7	40.7
Total Peel Loss, %	12.6	12.6	10.0	10.3	11.0	9.5
Disk Spacing, in.	3/4	3/4	3/4	3/4	3/4	1/2
Gears Used	D**	D	D	D	S***	S
Peeled Fruit Quality	Good	Good	Good	Good	Good	Good
Rinse Water, gal.	5.0	5.0	5.0	5.0	5.0	5.0
Rinse Water, gal./ton	333	333	222	167	333	222
NaOH Dip Time, Sec	30	30	22	22	22	30

Run No.	6-26-2	6-26-3	6-26-4	6-30-1	6-30-2	7-1-1
NaOH Conc., %	25-30	25-30	25-30	12.4	11.5	10.8
NaOH Temp. °F	210	210	210	210	210	140
Peeler Slope, in./10 ft	16	16	16	16	16	16
Feed, lb	45	45	45	60	60	60
Feed Time, Sec	90	75	65	115	120	120
Feed Rate, lb/hr	1800	1920	2500	1875	1800	1800
Peeled Weight, lb	41.7	41.2	41.7	53.1	54.1	56.6
Washed Weight, lb	40.1	40.0	39.4	53.0	53.2	N.R.
Total Peel Loss, %	7.3	8.4	7.1	11.5	9.8	N.R.
Disk Spacing, in.	1/2	1/2	1/2	1/2	1/2	1/2
Gears Used	S	1/2D	D	D	D	D
Peeled Fruit Quality	Good	Good	Good	Good	Fair	Fair
Rinse Water, gal.	5	5	5	5	5	5
Rinse Water, gal./ton	222	238	222	166	167	167
NaOH Dip Time, Sec	35	32	30	30	30	66

TABLE A-5 (Cont'd.)

Run No.	7-1-2	7-1-3	7-1-4	7-1-5	7-7-1	7-7-2
NaOH Conc., %	11.1	10.8	10-11	11.5	11.0	11.2
NaOH Temp. °F	140	210	210	210	210	210
Peeler Slope, in./10 ft	16	16	16	16	16	16
Feed, lb	60	60	60	60	60	60
Feed Time, Sec	120	120	120	120	68	68
Feed Rate, lb /hr	1800	1800	1700	1800	3200	3200
Peeled Weight, lb	54.5	55.2	55.0	55.5	55.3	55.9
Washed Weight, lb	54.3	N.R	N.R.	53.8	N.R.	N.R.
Total Peel Loss, %	9.5	8.0	8.3	10.3	8.0	6.8
Disk Configuration	0	0	0	0	0	0
Disk Spacing, in.	1/2	1/2	1/2	1/2	3/4	3/4
Gears Used	D	D	D	D	D	D
Peeled Fruit Quality	Fair	Fair	Fair	Fair	Good	Good
Rinse Water, gal.	5	5	5	5	5	5
Rinse Water, gal. /ton	167	167	167	167	166	166
NaOH Dip Time, Sec	72	27	27	27	24	24

Run No.	7-9-1	7-9-2	7-9-3	7-9-4	7-10-1	7-10-2
NaOH Conc., %	9.8	10.0	9.8	10.8	10.0	10.0
NaOH Temp. F	210	210	210	210	210	210
Peeler Slope, in./10 ft	16	16	16	16	16	16
Feed, lb	60	60	60	60	60	60
Feed Time, Sec	68	68	68	68	68	68
Feed Rate, lb/ hr	3200	3200	3200	3200	3200	3200
Peeled Weight, lb	55.9	56.2	57.8	57.6	55.3	55.0
Washed Weight, lb	N.R.	57.0	56.5	55.0	55.0	54.1
Total Peel Loss, %	6.8	6.3	5.9	7.5	8.3	9.8
Disk Configuration	0	0	0	0	0	0
Disk Spacing, in.	3/4	3/4	3/4	3/4	3/4	3/4
Gears Used	D	D	D	D	D	D
Peeled Fruit Quality	Good	Good	Good	Good	Good	Good
Rinse Water, gal.	5	5	5	5	5	5
Rinse Water, gal./ton	166	166	166	166	166	166
NaOH Dip Time, Sec	24	27	27	27	27	27

* The disk rotating speed was 373 RPM for all runs and the spindle sequence was A

**S Standard

***D Differential

N.R. Not recorded

1 Accession Number	2 Subject Field & Group	SELECTED WATER RESOURCES ABSTRACTS INPUT TRANSACTION FORM
	05D	

5 Organization

National Canners Association, Berkeley, California
Western Research Laboratory

6 Title

DRY CAUSTIC PEELING OF TREE FRUIT FOR LIQUID WASTE REDUCTIONS

10 Author(s)

Mercer, Walter A.
Ralls, Jack W.
Maagdenberg, Harry J.

16 Project Designation

EPA, WQO Project No. 12060 FQE

21 Note

22 Citation

23 Descriptors (Starred First)

*Peel Removal, Tree Fruit, Food Processing, Canning, Freezing, Dehydration, Peaches, Pears, Apricots

25 Identifiers (Starred First)

*Peel Removal, Liquid Waste Reductions

27 Abstract

The peeling of apricots, peaches and pears was studied with a peel removal unit consisting of a series of spindles holding rotating rubber disks. The peel was removed by a wiping action of the flexible rubber disks on fruit wetted with hot sodium hydroxide solutions. The quality of fruit peeled with the experimental unit was comparable to fruit peeled by conventional chemical peeling; peeling losses were about the same for the experimental unit and the commercial units.

The most striking difference between the experimental unit and the commercial units was in fresh water requirements and waste water volume and strength. The peeling of cling peach halves required one-fifteenth of the fresh rinse water volume of a conventional commercial peeler. The wastewater generated by the experimental peeling of peaches had about one-third of the chemical oxygen demand and suspended solid content of the wastewater from the commercial peeler.

The experimental peel removal unit accomplishes a diversion of potentially water polluting organic material from the wastewater to a peel sludge. The peel sludge has properties which allow it to be handled readily and disposed of as solid residual.

Abstractor	Institution
Jack W. Ralls	National Canners Association