United States
Environmental Protection
Agency

Environmental Sciences Research
Laboratory
Research Triangle Park NC 27711

EPA-600/2-79-028
February 1979

Research and Development

EPA

Optimized Chemiluminescence System for Measuring Atmospheric Ammonia

RESEARCH REPORTING SERIES

Research reports of the Office of Research and Development, U S. Environmental Protection Agency, have been grouped into nine series. These nine broad categories were established to facilitate further development and application of environmental technology. Elimination of traditional grouping was consciously planned to foster technology transfer and a maximum interface in related fields. The nine series are:

1. Environmental Health Effects Research
2. Environmental Protection Technology
3. Ecological Research
4. Environmental Monitoring
5. Socioeconomic Environmental Studies
6. Scientific and Technical Assessment Reports (STAR)
7. Interagency Energy-Environment Research and Development
8. "Special" Reports
9. Miscellaneous Reports

This report has been assigned to the ENVIRONMENTAL PROTECTION TECHNOLOGY series. This series describes research performed to develop and demonstrate instrumentation, equipment, and methodology to repair or prevent environmental degradation from point and non-point sources of pollution. This work provides the new or improved technology required for the control and treatment of pollution sources to meet environmental quality standards.

This document is available to the public through the National Technical Information Service, Springfield, Virginia 22161.

EPA-600/2-79-028
February 1979

OPTIMIZED CHEMILUMINESCENCE SYSTEM FOR MEASURING ATMOSPHERIC AMMONIA

by

Ralph Baumgardner, W.A. McClenny and R.K. Stevens
Atmospheric Chemistry and Physics Division
Environmental Sciences Research Laboratory
Research Triangle Park, North Carolina 27711

ENVIRONMENTAL SCIENCES RESEARCH LABORATORY
OFFICE OF RESEARCH AND DEVELOPMENT
U.S. ENVIRONMENTAL PROTECTION AGENCY
RESEARCH TRIANGLE PARK, NORTH CAROLINA 27711

DISCLAIMER

This report has been reviewed by the Environmental Sciences Research Laboratory, U.S. Environmental Protection Agency, and approved for publication. Mention of trade names or commercial products does not constitute endorsement or recommendation for use.

ABSTRACT

This report describes the optimization and testing of a continuous measurement system for the analysis of ammonia (NH_3) at concentrations found in the atmosphere ranging from 0 to 20 parts per billion (ppb). The measurement system combines an ultrasensitive chemiluminescence nitric oxide (NO) detector, with a thermal converter for NH_3 to NO conversion and an acidic scrubber for alternate removal of NH_3 from the sample stream.

The chemiluminescence monitor with a high temperature converter will give a combined measurement of NO, nitrogen dioxide (NO_2), and NH_3. Other nitrogen containing compounds, if present, may also be converted. By placing an acidic scrubber in the sample line, the NH_3 will be removed and a combined measurement of (NO_x [NO and NO_2]) will be obtained. By taking the signal difference when the scrubber is in or out of the sample line, the concentration of NH_3 can be determined. Other "basic" nitrogen containing compounds present in concentrations of greater than 1 ppb would, if thermally converted to NO, appear as a portion of the ammonia signal.

In the optimization of the measurement system it has been determined that a second NO_x signal, independent of the signal generated with or without the scrubber, aids in validating the signal difference observed is ammonia. Different approaches for generating signal response from the system are discussed, namely the use of two detectors or one detector and a switching valve.

The use of two separate detectors was tested in the laboratory. The detector for measuring the chemiluminescence of NO and ozone (O_3) was optimized to allow for analysis of concentrations of less than 1 ppb of NO, NO_2, or NH_3. An optimum configuration for the acidic NH_3 scrubber was also achieved.

Performance tests were conducted on the total measurement system to verify its capability to measure NO, NO_2 and NH_3 under laboratory conditions as well as ambient monitoring conditions. A dynamic calibration system capable of generating 1 ppb of NH_3 was used for the testing. The calibration system is a double dilution permeation system.

Testing in the laboratory and monitoring of ambient air indicate that the optimized measurement system is capable of measuring atmospheric concentrations of NH_3 on a continuous basis.

CONTENTS

Abstract iii
Tables v
Figures vi

1. Conclusions 1
2. Introduction 2
3. Discussion 6
4. Experimental 19
5. Results 29

References 36

TABLES

Number Page

1 System Response to Humidified Samples of Nitric Oxide and Nitrogen Dioxide Using Two High Temperature Converters 35

2 System Response to Humidified Samples of Nitric Oxide and Nitrogen Dioxide Using a High and Low Temperature Converter 35

FIGURES

Number		Page
1	Flow diagram of NH_3 measurement system	12
2	Diagram of NO detector	13
3	Diagram of sensitive chemiluminescent NO monitor	14
4	Response of optimized NO detector	15
5	Single spiral reactor	16
6	Diagram of Thermo Electron model 14T, NO, NO_x, NH_3 monitor	17
7	Diagram of Columbia Scientific Industries NO_x monitor	18
8	Flow diagram of Aerochem chemiluminescence NO monitor	22
9	Diagram of NH_3 scrubber	23
10	Diagram of NH_3 scrubber system	24
11	Diagram of NH_3 measurement system using two separate detectors	25
12	Diagram of modified NO, NO_2 calibration system (gas phase titration)	26
13	Diagram of Research Triangle Institute (RTI) double dilution permeation system	27
14	Function diagram, Research Triangle Institute permeation system	28
15	Response of the measurement system to NH_3 with and without NH_3 scrubber	32
16	Ammonia response using different converters with the NH_3 scrubber system	33
17	Measurement of ambient concentrations of NH_3	34

SECTION I

CONCLUSIONS

Test results and evaluation of the ammonia (NH_3) measurement system show that the design of the optimized system allows for measurement of ambient ammonia concentrations as low as 1 ppb level. Nitric oxide (NO) and nitrogen dioxide (NO_2) at this low concentration can also be measured with the measurement system described.

The thermal converter in the measurement system has been shown to give quantitative conversion of NH_3 and NO_2 to NO at low concentrations under varying humidity conditions. The NH_3 scrubber has been demonstrated to quantitatively remove NH_3 in concentrations ranging from 0 to 50 ppm while passing NO_2 and NO.

To measure ambient NH_3 concentrations, different system designs are possible as long as the following criteria are met:

- The chemiluminescence detector must have a minimimun detectable limit of 0.5 ppb with a signal to noise ratio of one.
- The system must have two signal outputs, one for NO_x and one for NO_x plus NH_3.
- Thermal converters must quantitatively convert NO_2 and/or NH_3 to NO.
- The acidic scrubber must quantitatively remove NH_3 while quantitatively passing NO and NO_2.

The total NH_3 measurement system including chemiluminescence detector, thermal converters, and NH_3 scrubber provides a sensitive method for the detection of atmospheric NH_3.

SECTION II

INTRODUCTION

Ammonia (NH_3) is one of a number of nitrogen containing compounds found in the atmosphere. This natural constituent plays an important part in the total biological nitrogen cycle. Anthropogenic sources of ammonia also exist from combustion of oil and coal, which contribute minor amounts. The impact of man-made sources however, on the total atmospheric cycle is small (1). In the future, urban concentrations of NH_3 may be affected by the number of catalytic converter equipped automobiles which under certain operating conditions can produce NH_3 in the exhaust.

Unlike NO_x, NH_3 has no health related effect at concentrations found in the atmosphere. Its importance in air pollution is limited to its function in the neutralization of sulfuric and nitric acids. Ammonium sulfate and ammonium nitrate, the end products of these neutralization processes, have been implicated in health related problems (2).

To provide a more complete understanding of atmospheric aerosol formation accurate up-to-date data on rural and urban concentrations of atmospheric NH_3 must be obtained.

Data on background concentrations of atmospheric NH_3 has been reported in studies by Junge (3), Pate and Lodge (4), Healy et al. (5), and Breeding et al. (6). Comparison of the data from these studies indicate that background concentrations of NH_3 range from less than 1 ppb to 20 ppb depending on geographical location and time of year. Breeding et al. and Junge have

shown that atmospheric NH_3 concentrations range from 1 to 10 ppb (.69 to 6.9 $\mu g/m^3$) over much of the United States. In reviewing the data on atmospheric NH_3 concentrations it becomes apparent that the measurement methodology used to obtain the data had a great amount of uncertainty in the range of NH_3 concentration found 1 to 20 ppb (.69 to 13.8 $\mu g/m^3$). Since static calibration was used to standardize these methods rather than dynamic generation of known NH_3 concentrations in the range of measurement, sample integrity in the sampling portion of the measurement techniques could not be evaluated.

Measurement methodology for ambient NH_3 determination has generally been limited to two manual colorimetric techniques in which the sample is collected in bubblers. The technique first developed and evaluated for atmospheric monitoring was the Nessler colorimetric technique (7,8). This technique requires the collection of NH_3 in an acidic solution, and subsequent reaction with the Nessler (alkaline potassium iodide/mercuric chloride) reagent to form a colored complex. The NH_3 concentration is determined spectrophotometrically by measuring the absorbance of the colored complex at 440 nm. The method has been shown to have interferences from hydrogen sulfide and formaldehyde, and the stability of reagents is also a problem (9,10). The minimum detectable concentration has been found to be 15 ppb (10.3 $\mu g/m^3$).

The other colorimetric method which has been more recently optimized is the indophenol method (11,12,13). Ammonia collected in an acidic solution is reacted with phenol and alkaline sodium hypochlorite to form the indophenol dye. The sample is analyzed colorimetrically at 630 mm. The advantages of the indophenol method compared to the Nessler method are fewer potential interferences and more stable reagents. The range of the method has been reported to be from 25 to 1000 ppb (17.2 to 697 $\mu g/m^3$). Errors in the

technique can be as high as ±30% below 25 ppb (17.2 $\mu g/m^3$). By using an autoanalyzer and modifications to the technique as described by Georgii et al. (14), measurements can be made below .025 ppm (17.2 $\mu g/m^3$) although errors of ±10% remain at the 2 ppb level.

The use of a pyridine-pyrazolone reagent for analysis of NH_3 was first described by Kruse and Mellon (16) who used bubblers to collect the NH_3. The NH_3 collected in bubblers was reacted with the pyridine-pyrazolone reagent and the absorbance of the solution was measured at 450 nm with a spectrophotometer. In 1971 Okita and Kamamori (15) reported a technique combining pyridine-pyrazolone reagent with the sample collection using filters impregnated with sulfuric acid rather than bubblers. Okita found that formaldehyde was not an interferent in this method as with the Nessler procedure, however no increase in sensitivity was determined. Other recently developed analytical procedures for analysis of atmospheric NH_3 include a colorimetric bubbler technique using o-(benzenesulfonamide-p-benzoquinone reagent (17) and an analysis procedure using a Ring Oven after NH_3 collection on a filter impregnated with oxalic acid (18). David et al. (19) described a measurement system using an optical waveguide chemically coated and sensitized for NH_3. Light transmission through the waveguide changes as a function of the amount of NH_3 absorbed in the reactant surface per unit time. The response of the system was found to be flow independent but was affected by humidity. The sensitivity of the method was reported to be 5 ppb with an error of ±10%. Mulik et al. (20) recently described a sensitive and selective method for the assay of ammonium ion in ambient aerosols using the relatively new technique, ion chromatography. Preliminary experiments indicated gaseous NH_3 could be collected in a 3% oxalic acid solution in a bubbler or coated on a filter and then analyzed with the ion chromatograph.

In the measurement methodology described above, the sample is first collected and analyzed at a later time. None of these methods can answer the need for a real-time continuous monitoring method which has specificity and can accurately detect atmospheric NH_3 levels of 1 ppb or less. A measurement system combining a chemiluminescence nitric oxide monitor (21,22) and a thermal NH_3 converter coupled with an NH_3 scrubber has been reported which would potentially have the sensitivity and specificity needed for accurate NH_3 measurement at the 1 ppb level.

SECTION III

DISCUSSION

Measurement of gaseous NH_3 using a chemiluminescence nitric oxide monitor with a thermal converter has been discussed previously by Breitenbach and Shelef (23), Sigsby et al. (24) and Hodgeson et al. (25). The work by Breitenbach and Shelef, and Sigsby et al. centered on measuring NH_3 in auto exhaust where sensitivity was not critical, and the NH_3 to NO converter materials selected for this application were not thoroughly tested for use in atmospheric monitoring. The measurement system described by Hodgeson measured atmospheric NO_x and NH_3 concentrations. However, the thermal converter material used in this study, was gold wool, which subsequently was found to have widely variable conversion properties.

Laboratory evaluation of the chemiluminescence system as described by Hodgeson verified its potential as an atmospheric NH_3 monitor but indicated that considerable optimization of the system would be necessary. Components of the measurement system which would need optimizing included the chemiluminescence NO detector, the NH_3 to NO converter, and the NH_3 scrubber.

Evaluation of commercially available chemiluminescence NO monitors used in ambient monitoring of NO_x showed a sensitivity of 5 to 10 ppb to NO. Early development work on the chemiluminescence NO detector by Fontijn et al. (21) and Hodgeson et al. (25) report that a sensitivity of 1 ppb is possible with the detector. With reported ambient NH_3 concentrations in the range

of 1 to 10 ppb, a detection system with a sensitivity of less than 1 ppb would be necessary to achieve the resolution for accurate monitoring of NH_3.

Both Sigsby and Hodgeson approached the measurement of NH_3 as a subtractive process using one chemiluminescence detector, a thermal converter and an acidic scrubber. The accuracy of the measurement of NH_3 depends on the ability of the scrubber to completely remove the NH_3 while quantitatively passing the NO_2 and NO under widely varying atmospheric conditions of high NO, NO_2 and relative humidity. Variations in NO and NO_2 concentration in the atmosphere make NH_3 determinations difficult. Even with sample integration, NO and NO_2 concentrations can vary 5 to 10 times the ambient NH_3 concentrations. A different approach would therefore be needed to successfully separate the signal due to NH_3 from the NO and NO_2 signal.

A method for separating the signal generated by NH_3 from that generated by NO and NO_2 would be to generate separate and continuous signals for NO_x and for NO_x plus NH_3. With a continuous signal for both NO_x and for NO_x plus NH_3, fluctuations of NO and NO_2 could be monitored by one signal while the NH_3 was being alternately measured and scrubbed in the second channel. Different approaches have been demonstrated for generating two continuous signals from the same measurement system. One approach would be to use two chemiluminescence detectors, two phototube assemblies and two signal processors with a split sample stream to give separate signals. Another technique would be to use three detectors, one phototube, and an optical chopper to look at each detector alternately, with a portion of the sample stream going to each detector. A third possibility employs one detector, one phototube and mechanically switches the sample stream from one flow arrangement to

another, alternately looking at flow through one converter, then another. Each of these approaches has been integrated into a viable chemiluminescence monitor for NO and NO_2. All of these detection systems use a split sample stream, and the placement and type of converter for each part of the sampling system becomes important.

An example of signal separation using two chemiluminescence detectors and two converters is given in Figure 1. The sample stream is split with part of the sample passing through a low temperature converter to convert NO_2 to NO and part of the sample passing through a high temperature converter where both NO_2 and NH_3 are converted. If the conversion efficiency for NO_2 is equal in both converters, the signals would be equal except for the signal generated by the NH_3. By placing the NH_3 scrubber system in the channel with the high temperature converter, verification of the NH_3 can be obtained when a difference in signals is observed. When the sample is flowing through the NH_3 scrubber, the NO_x fluctuations can be monitored in the second channel and signals should be identical. A different scrubber arrangement with the two detector system would have two high temperature converters which would convert both NO_2 and NH_3. One portion of the sample stream would be split and an NH_3 scrubber system would be placed upstream of one converter. When the scrubber system was in the by-pass mode the two signals would be identical; with the scrubber in line, the difference would be the NH_3 scrubbed out in one channel. Either of the two methods would require a monitoring system with two continuous signal outputs: one for NO_x, and one for NO_x plus NH_3.

Detector Design

The sensitivity of the system can be enhanced either by modifying the NO

detector cell described by Hodgeson et al. (25), or complete redesign of the detector. Optimization and modification of previous cell designs was attempted to increase sensitivity. The cell used is shown in Figure 2. A diagram of the total system is shown in Figure 3. The cell as shown was positioned within 2" of an EMI, S-20, extended-red photomultiplier tube. The tube was cooled to -20°C. The signal from the detector was sent to a Keithley Model 417 picoammeter. A Spectrum Model 1021 filter was added to the output of a picoammeter prior to being sent to a recorder. Ozone for the NO-ozone reaction was produced using a Model 100 Thermo Electron ozone generator. Optimum flow conditions for the cell were an ozone partial pressure of 5 torr and sample flow of 10 torr (150 cc/min). Figure 4 shows a typical response for the detector. Maximum sensitivity of 5 ppb full scale with a 2% noise was possible with this design.

Independent of work within the Environmental Protection Agency on NO detector cell modification, Aerochem Research Labs designed and fabricated an NO reaction cell which differed from previous designs (26). Using a spiral reaction cell to increase residence time for the NO-O_3 reaction near the face of the photomultiplier tube and high sample flow, the sensitivity of this detector was determined to be 0.5 ppb. A diagram of the reaction cell is shown in Figure 5. For field measurement for ambient NH_3, the Aerochem detector has the advantage of a high sample through-put to minimize sample loss through the system and near ambient pressure operation to reduce instrument size.

Newly available commercial NO, NO_x monitors which have the necessary design features along with sensitivity to NO of <5 ppb include the Thermo Electron Model 14T and the Columbia Scientific Industries Model 1600. The

Thermo Electron monitor uses one phototube, three detectors and a light chopping technique to look at each reaction cell alternately. The sample stream is split with part of the flow going to each cell. (See Figure 6.) The CSI monitor has one phototube, one cell and a valve which rapidly switches different portions of a split sample stream into the detector as shown in Figure 7. The design of each of these analyzers would allow for separate signals for NO_x and NO_x plus NH_3.

Ammonia Converter

Thermal conversion of NH_3 to NO using metal surfaces has been reported by a number of researchers (22,23,24). Stainless steel heated to 800°C has been shown to quantitatively convert NH_3 to NO. Data reported was generally for concentrations higher than atmospheric. Testing of stainless steel indicated an initial quantitative conversion of NH_3 in the range of 1 to 20 ppb; however, prolonged heating of the stainless steel tubing resulted in a decrease in conversion efficiency. Repetitive tests with different types of stainless steel tubing gave the same results. A different converter material was necessary to assure adequate conversion efficiency for NH_3 at atmospheric concentrations.

Previous work by Bell (personal communication) indicated that platinum gauze heated to a temperature greater than 300°C would convert NH_3 to NO. Evaluation of a thermal converter using a platinum catalyst showed that at a temperature of 800°C, NH_3 concentrations of 1 to 50 ppm (.69 to 34.5 $\mu g/m^3$) could be quantitatively converted to NO. Repetitive tests using this converter indicated sufficient lifetime (6 months) for use in a continuous monitoring system.

Ammonia Scrubber

The use of a chemical scrubber to remove NH_3 from an air stream was previously discussed by Sigsby et al. (23) and Hodgeson et al. (24). The scrubber used by Hodgeson relied on diffusion of NH_3 from a sample stream to the wall of a glass tube coated with phosphorous acid. Durham (27) characterized the conditions necessary for removal of sulfur dioxide by diffusion from an air stream using a chemically coated tube. The same equations can be used to determine the optimum conditions for removal of NH_3 using a coated tube. For removal of NH_3 in an air stream of fixed laminar flow, the tubing diameter and tubing length can be set to assure that NH_3 is quantitatively removed.

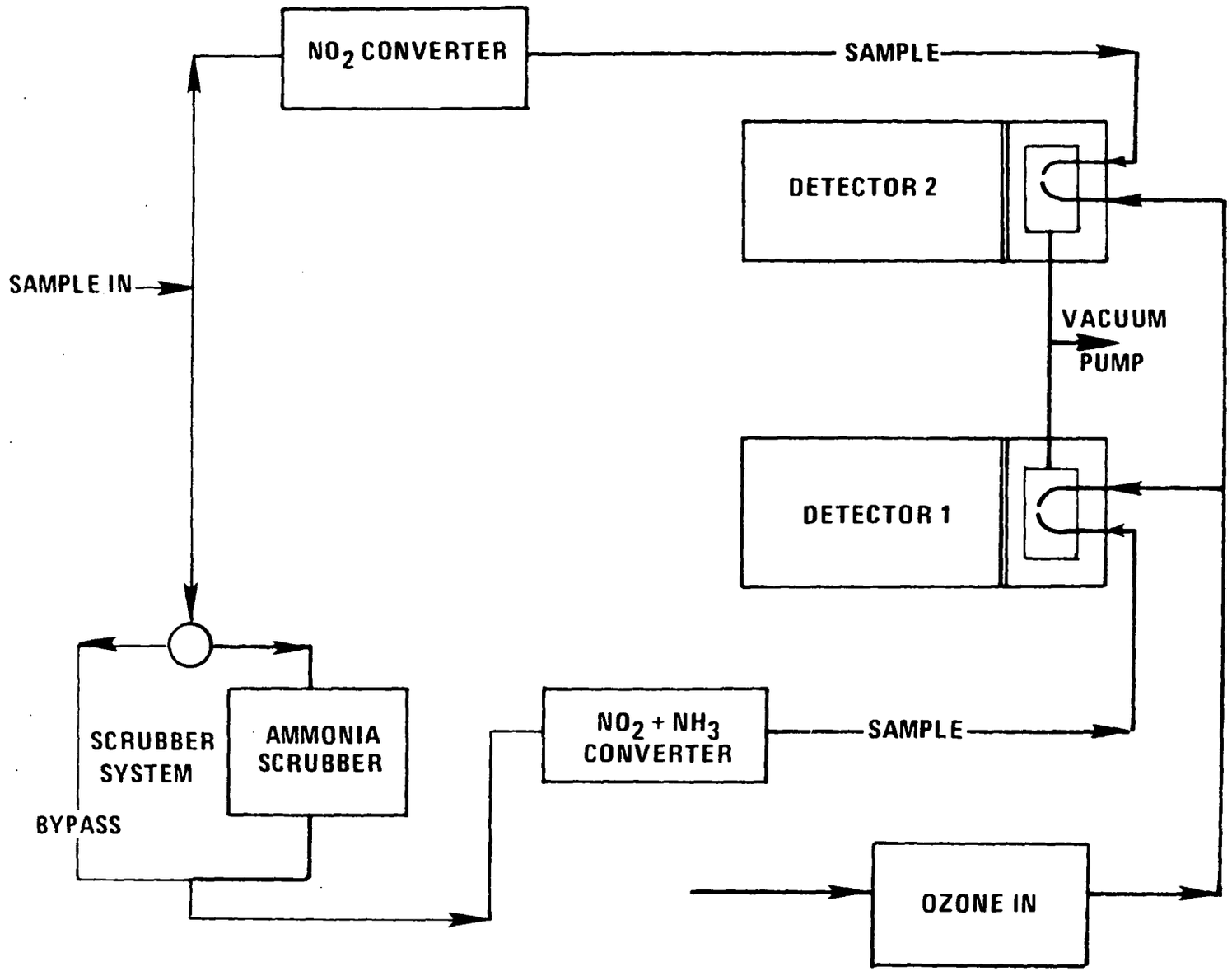

Figure 1. Flow diagram of ammonia measurement system.

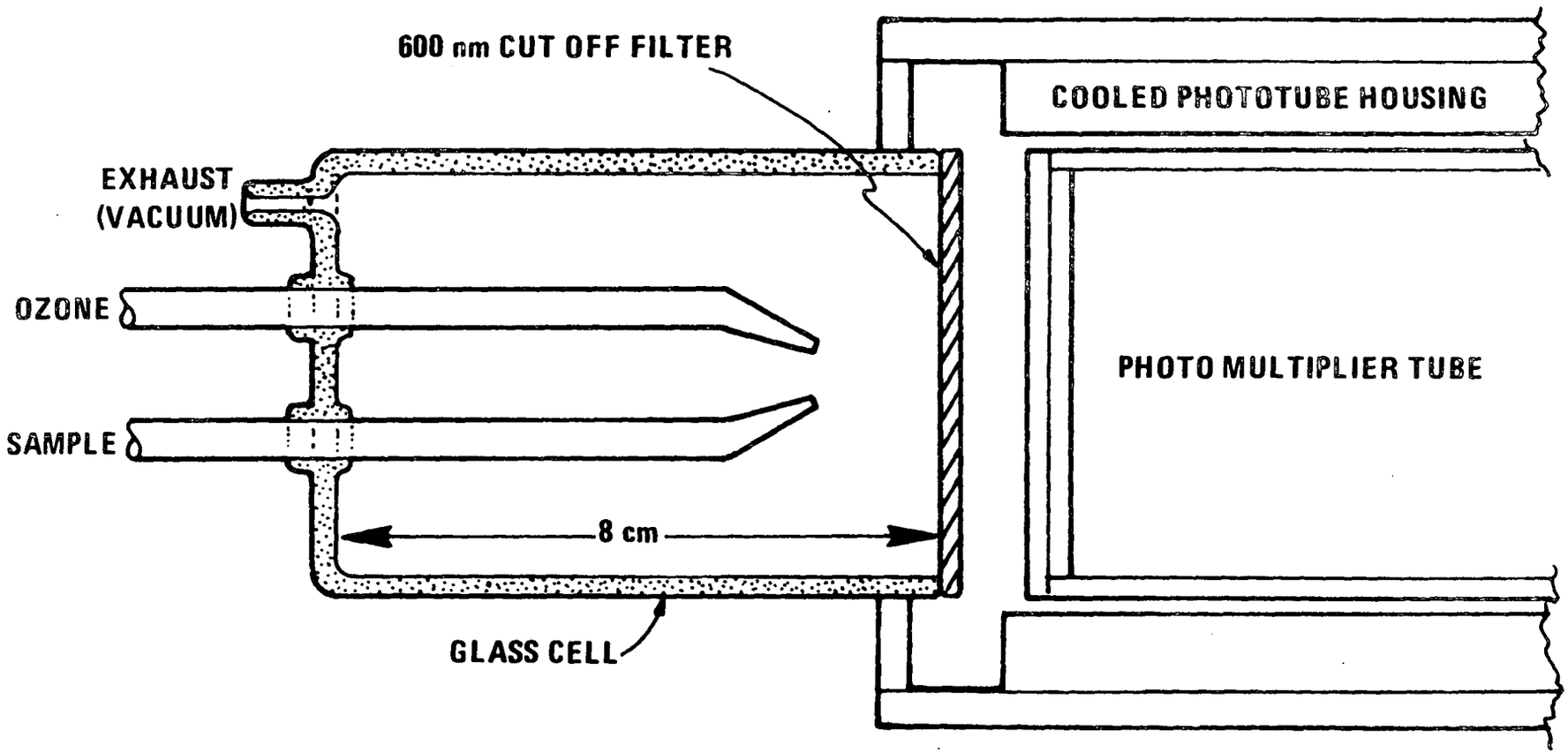

Figure 2. Diagram of NO reaction cell.

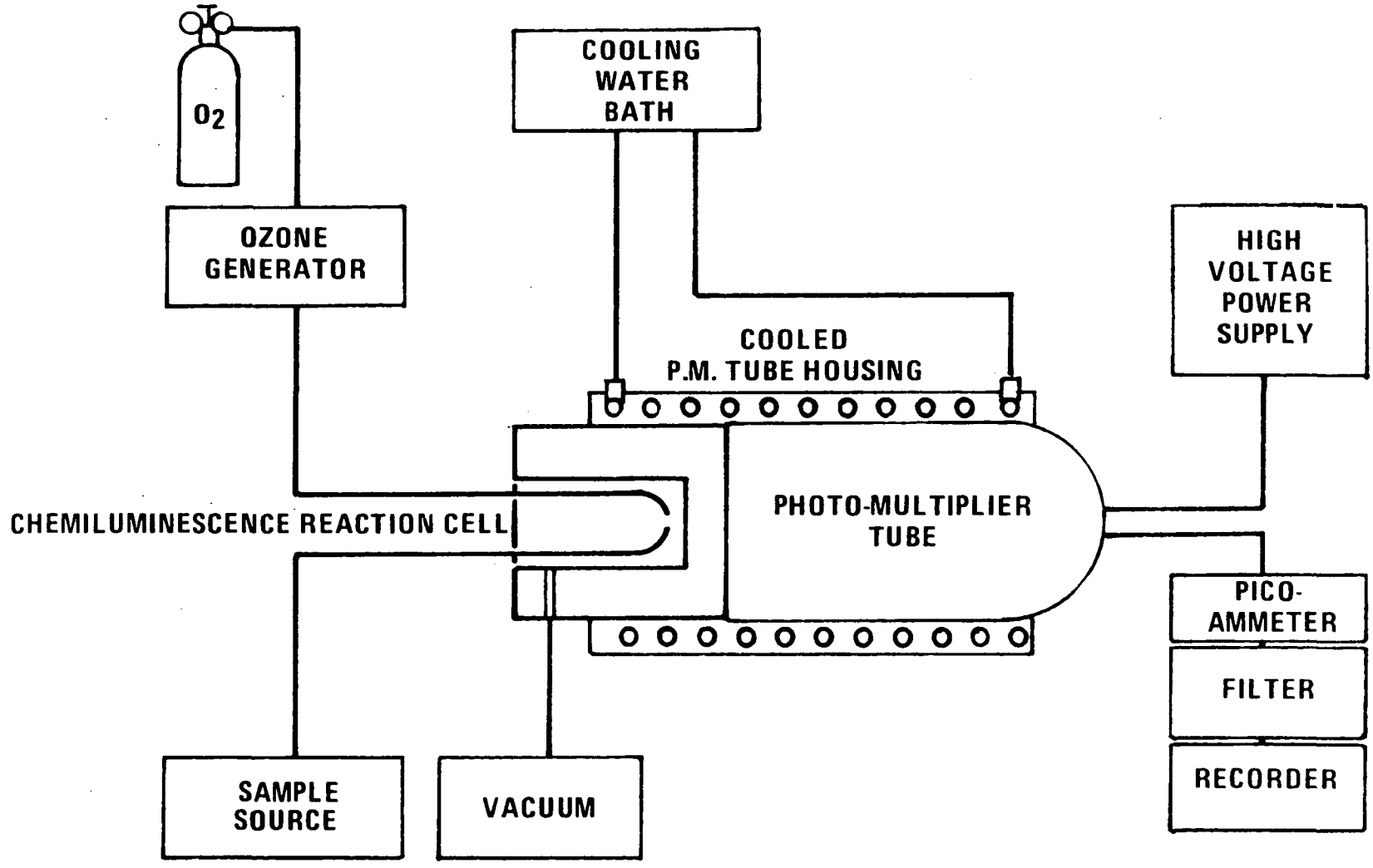

Figure 3. Diagram of sensitive chemiluminescence NO monitor.

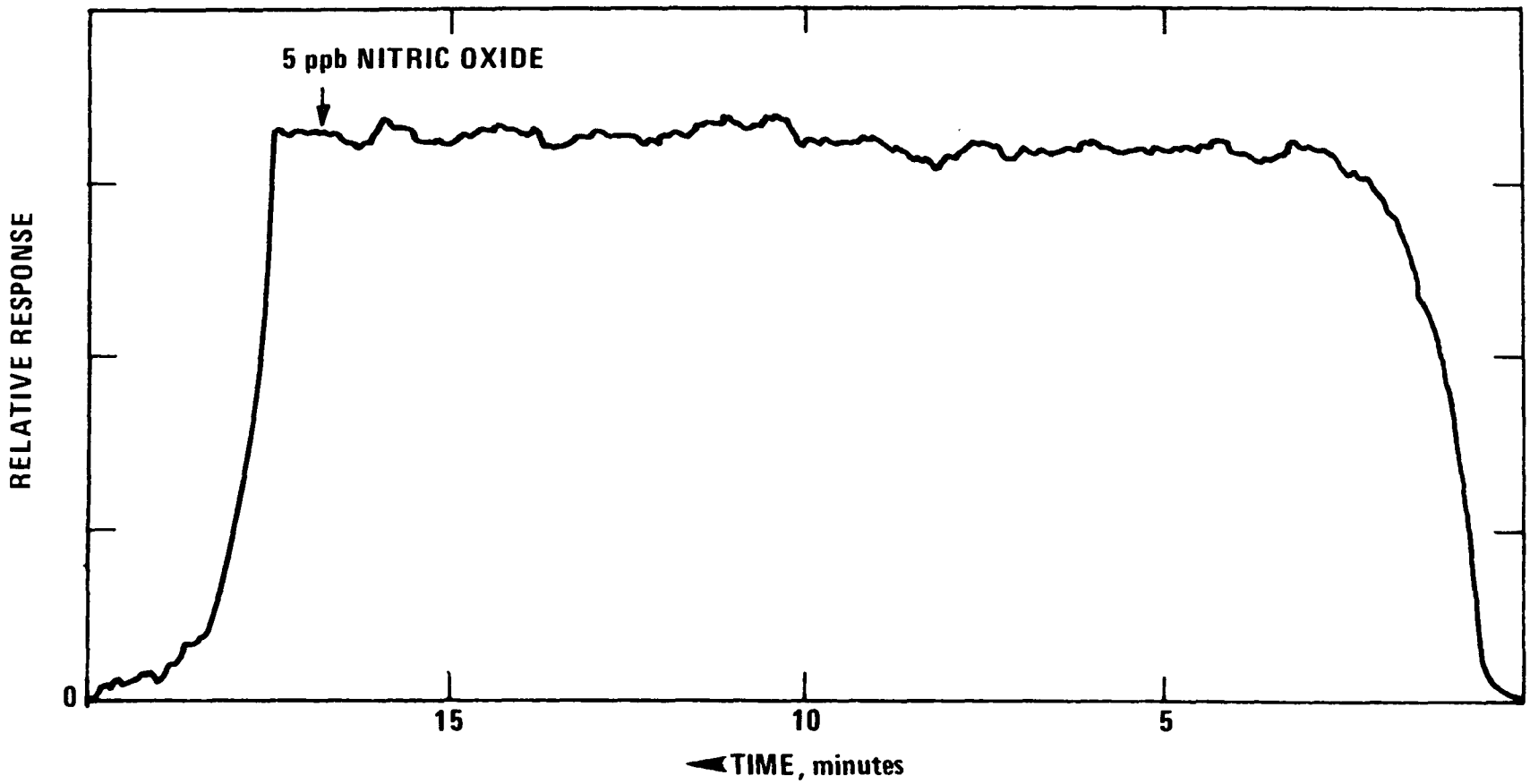

Figure 4. Response of optimized NO detector.

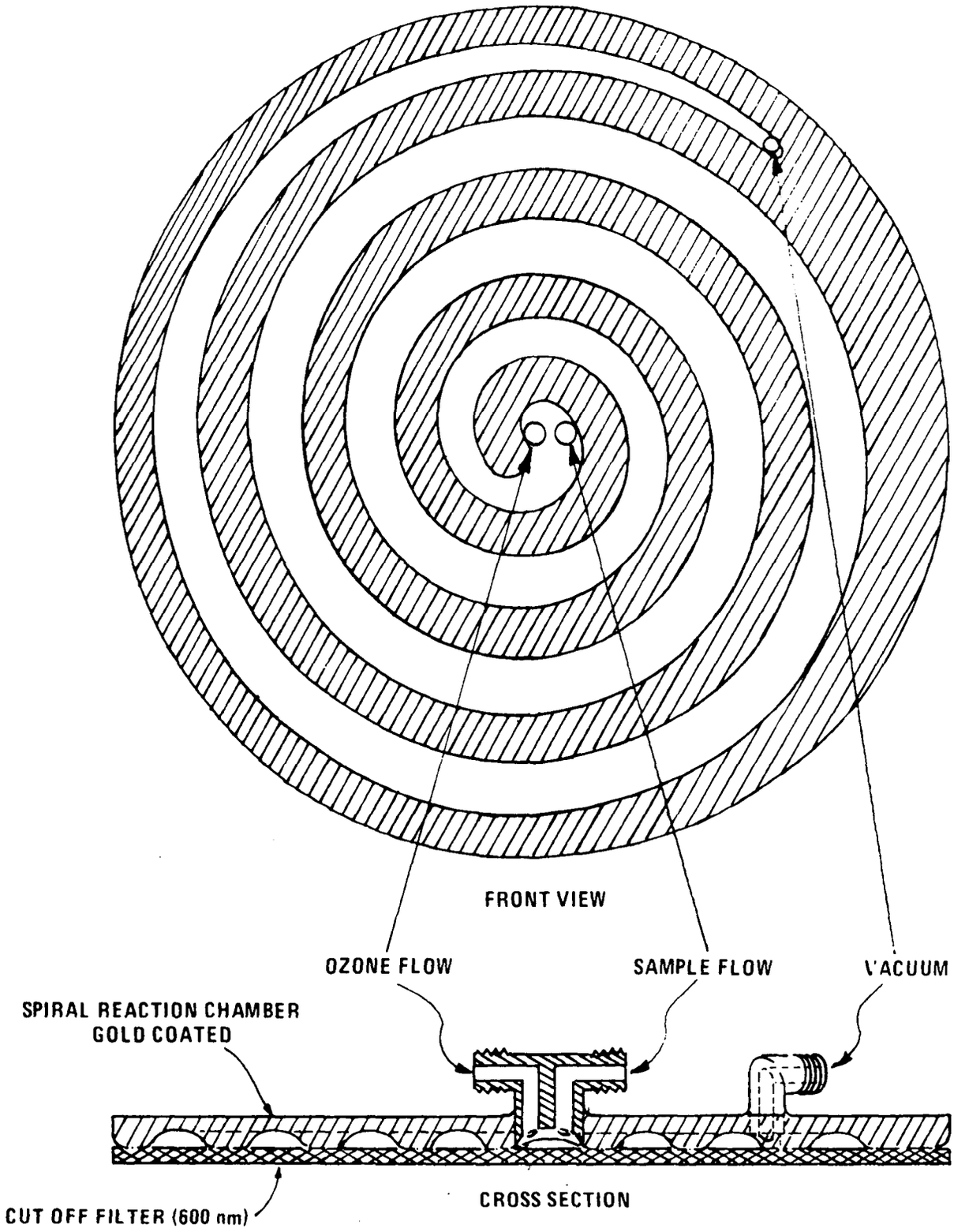

Figure 5. Single spiral reactor.

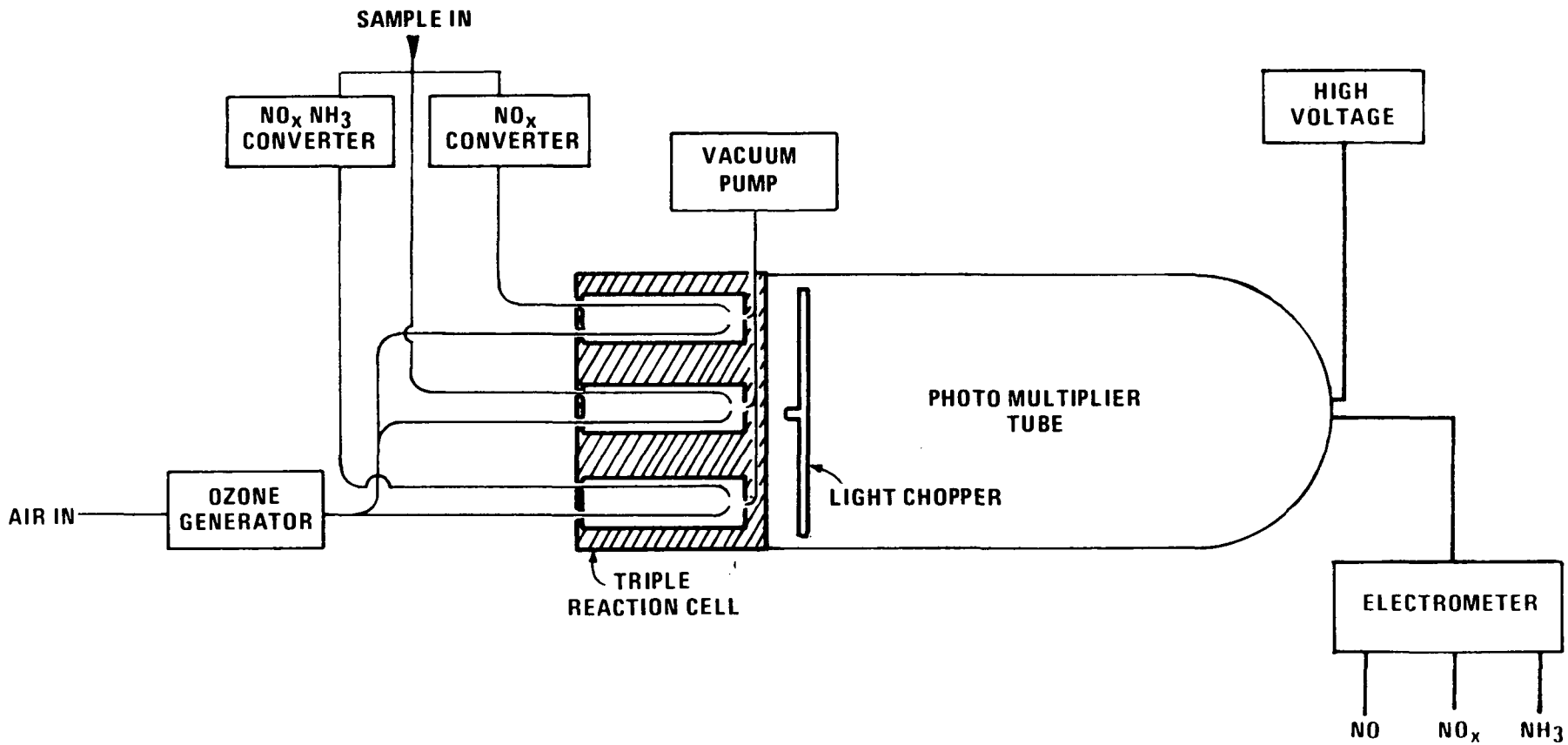

Figure 6. Diagram of Thermo Electron Model 14T NO, NO_x, NH_3 Monitor.

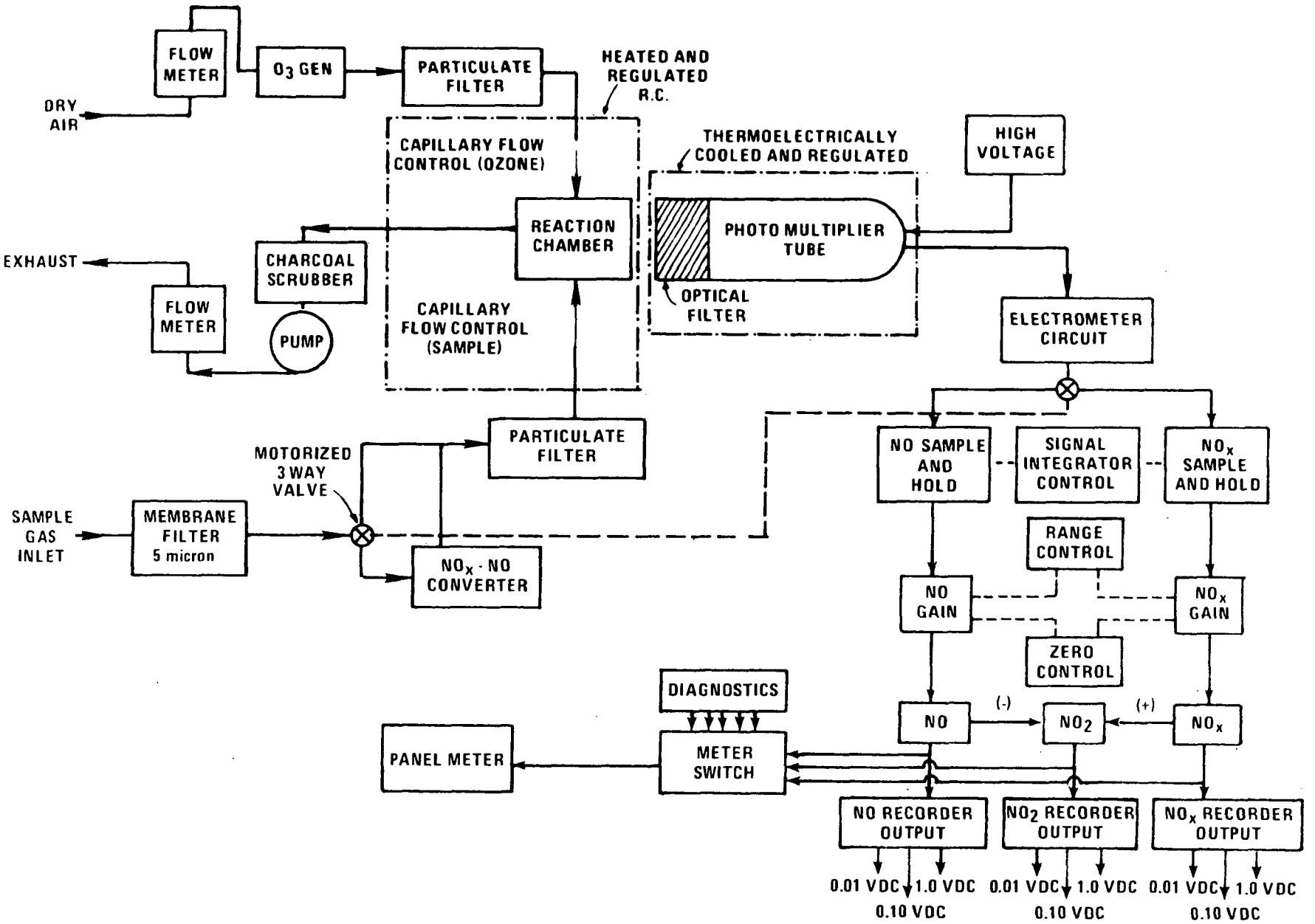

Figure 7. Diagram of CSI Model 1600 NO_x Monitor.

SECTION IV

EXPERIMENTAL

A prototype NO_x, NH_3 monitor was fabricated by Aerochem and delivered to EPA under Contract 68-02-2424. The monitor is equipped with two of the spiral reaction chambers discussed earlier in this report. (See Figure 8.) Sample is pulled into the instrument through a common inlet and is split as shown in the diagram. The sample flow into each reaction chamber is 2.5 l/min. Sample passes through two high temperature platinum converters heated to 1000°C. Air is pulled through the ozonator at a flow of 360 cc/min and then is split to go to each reaction chamber to give an ozone flow of 180 cc/min. Each detector uses an extended-red trialkali photomultiplier cooled by a thermoelectric cooled housing to 5°C. The monitor has signal output ranges of 0-5 ppb, 0-20 ppb, 0-50 ppb, 0-200 ppb, 0-500 ppb for NO_x and NO_x plus NH_3.

An NH_3 scrubber was designed and fabricated under contract to Research Triangle Institute to be used with the NO_x-NH_3 monitor built by Aerochem. Quantitative removal of NH_3 at a total sample flow of 5 l/min would require a coated glass tube 300 cm in length and 1/4" I.D. In order to make a more compact unit for field use, a bundle of 10 tubes 30 cm in length and 1/4" I.D. was used as shown in Figure 9. The ends of the bundle were placed in a teflon frame which was clamped to an outer cap. The scrubber was placed in a box that was constructed as shown in Figure 10. Two teflon solenoid valves were used to direct the sample flow through the scrubber or by-pass. The

solenoid valves were connected to an electronic timer to automatically switch the sample through the scrubber or the by-pass. This interval could be varied from 2 sec to 60 min.

The total NH_3 measurement system was assembled as shown in Figure 11. Sample lines upstream of the NH_3 converters were heated to prevent loss of NH_3.

Two calibration systems were fabricated to deliver known concentrations of NO, NO_2, and NH_3 over a range of 1 to 500 ppb. The calibration system for delivering known concentrations of NO and NO_2 was designed similar to that described by Rehme et al. (28). Figure 12 is a flow diagram of the system modified to introduce water vapor to regulate humidity. An EGG Model 680 Dew Point Hygrometer was used to measure the relative humidity of the calibration gases.

The second calibration system was a double dilution permeation system built by Research Triangle Institute (RTI) (29). This system was fabricated to meet the need for accurately generated ammonia concentrations as low as 1 ppb. A flow diagram of the system is shown in Figure 13. A supply of zero air flows into the system where it is split and routed to two separate automatic flow controllers. One controls air over the permeation tube, the other controls the flow of dilution air. Air flow over the permeation tube can be regulated between 200 cc/min and 10 l/min. A splitter sends 100 cc/min of the effluent from the permeation tube chamber to a chamber where it is mixed with the dilution air stream. Dilution air flow can be varied from 200 cc/min and to 10 l/min. The permeation tube is housed in a constant temperature oven, and controlled to within ±.01°C over a ±10°C ambient temperature change. The temperature of the oven can be varied from 20°C to 30°C. A

functional diagram of the system is shown in Figure 14. A digital panel meter allows direct readout permeation flow, dilution flow and oven temperature.

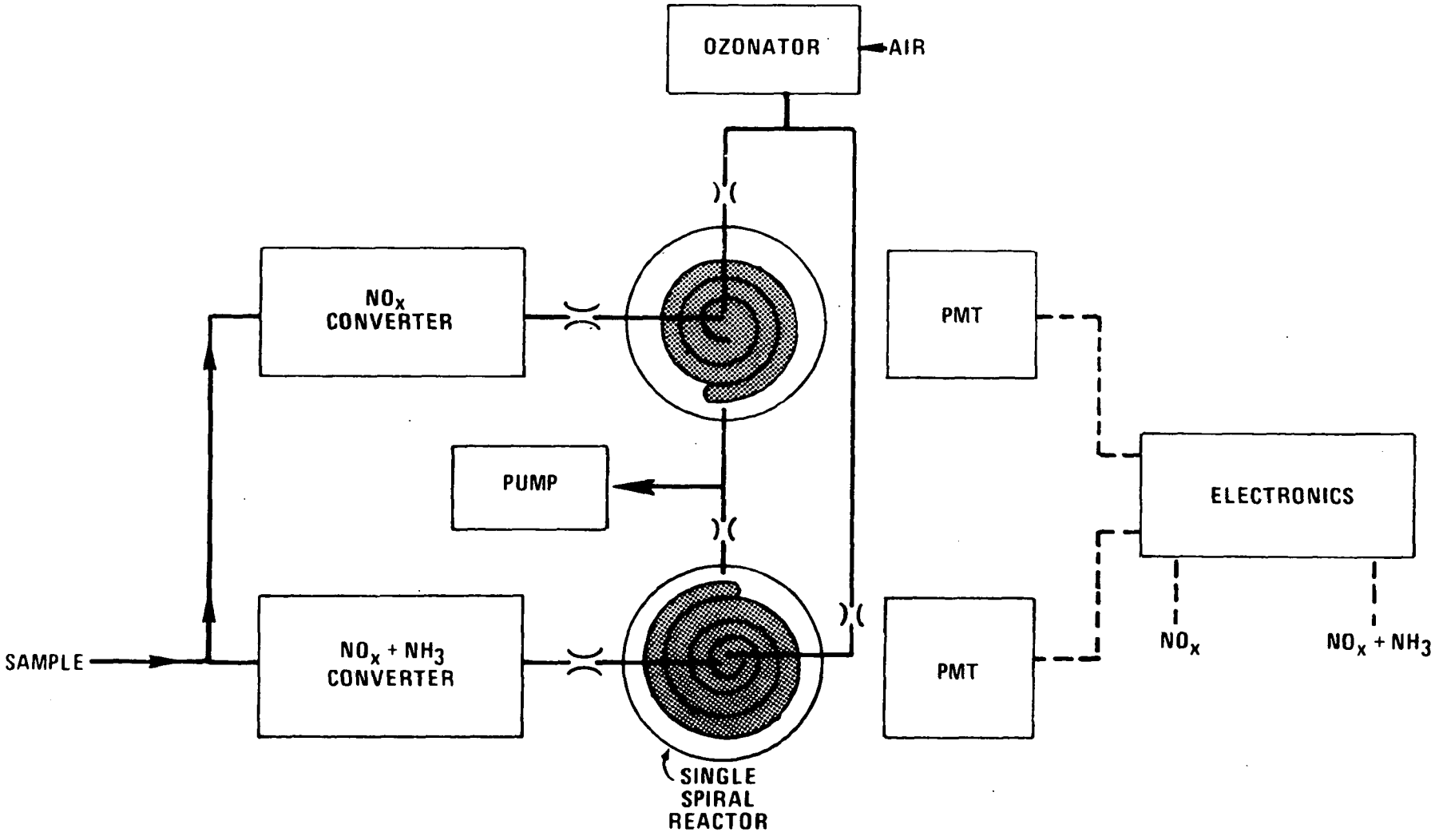

Figure 8. Flow diagram of Aerochem chemiluminescence monitor.

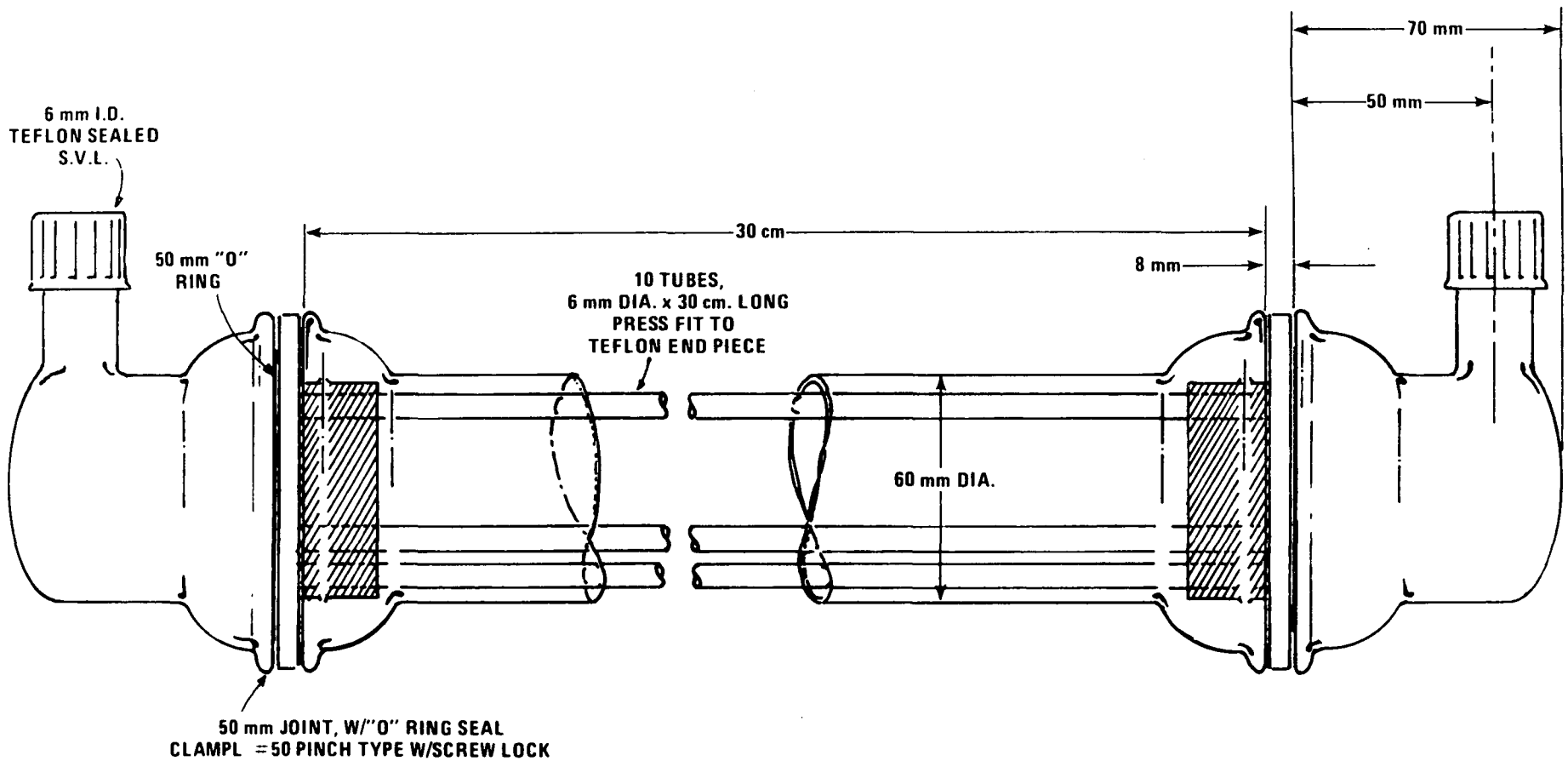

Figure 9. Diagram of ammonia scrubber.

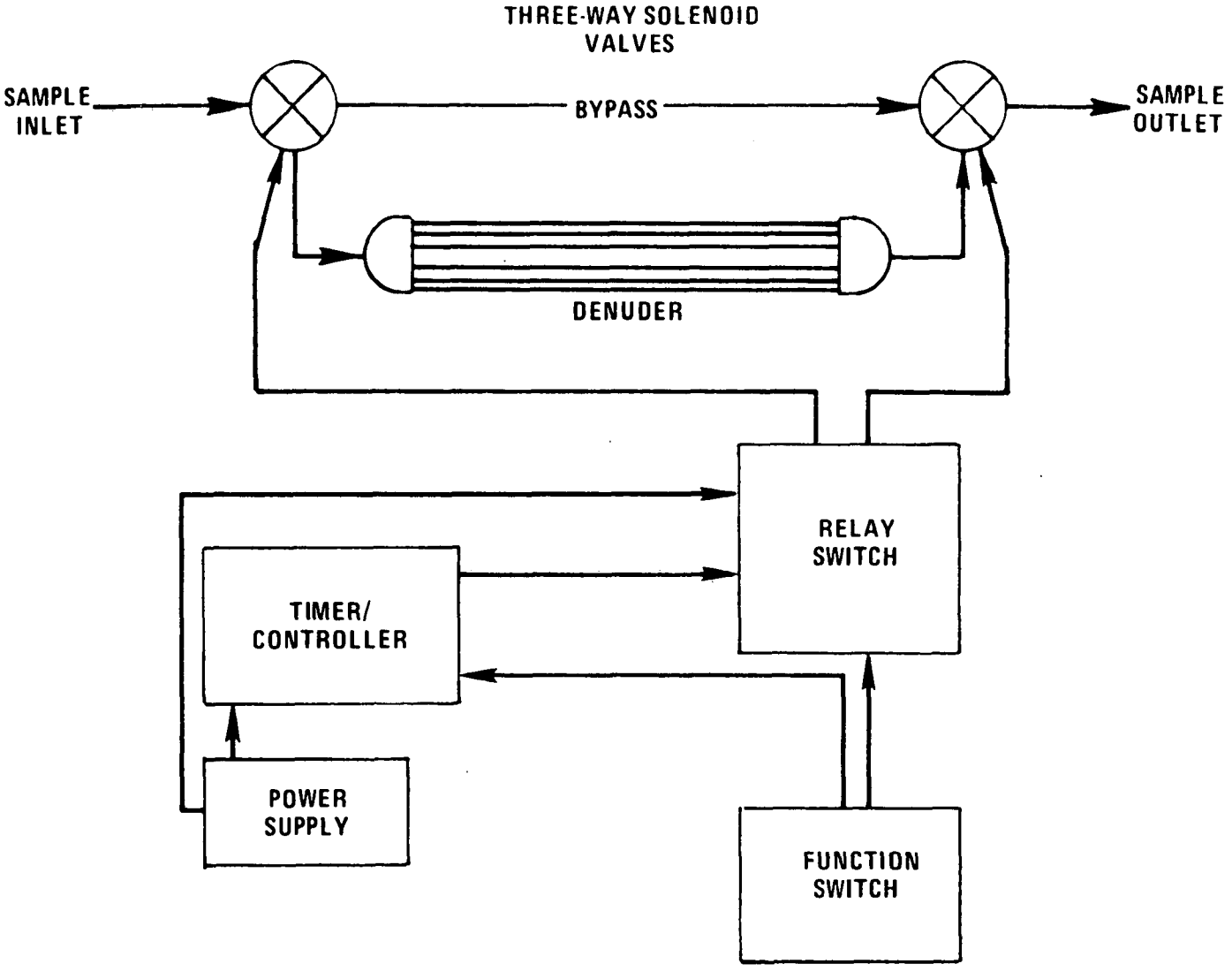

Figure 10. Diagram of ammonia scrubber system.

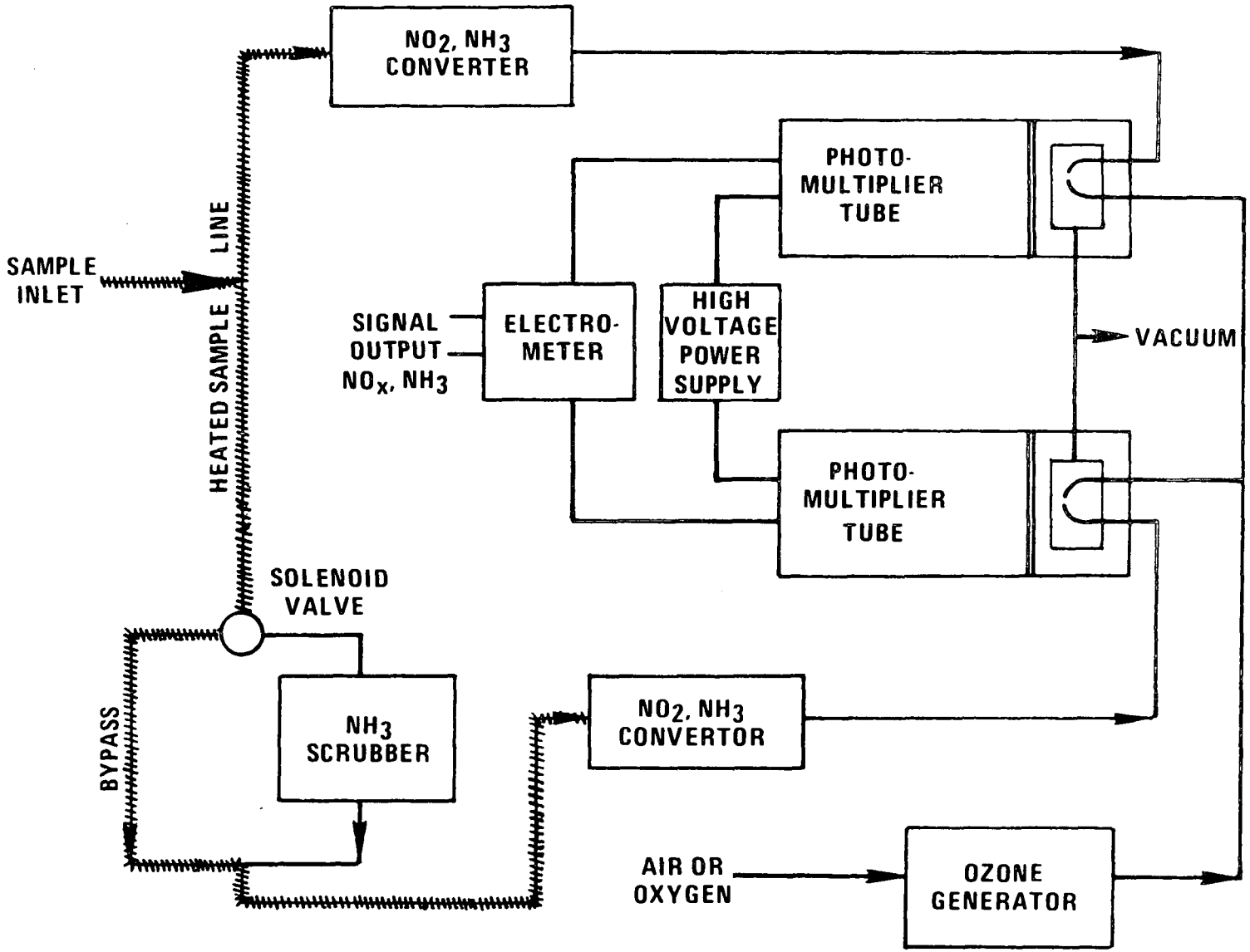

Figure 11. Diagram of ammonia measurement system using two separate detectors.

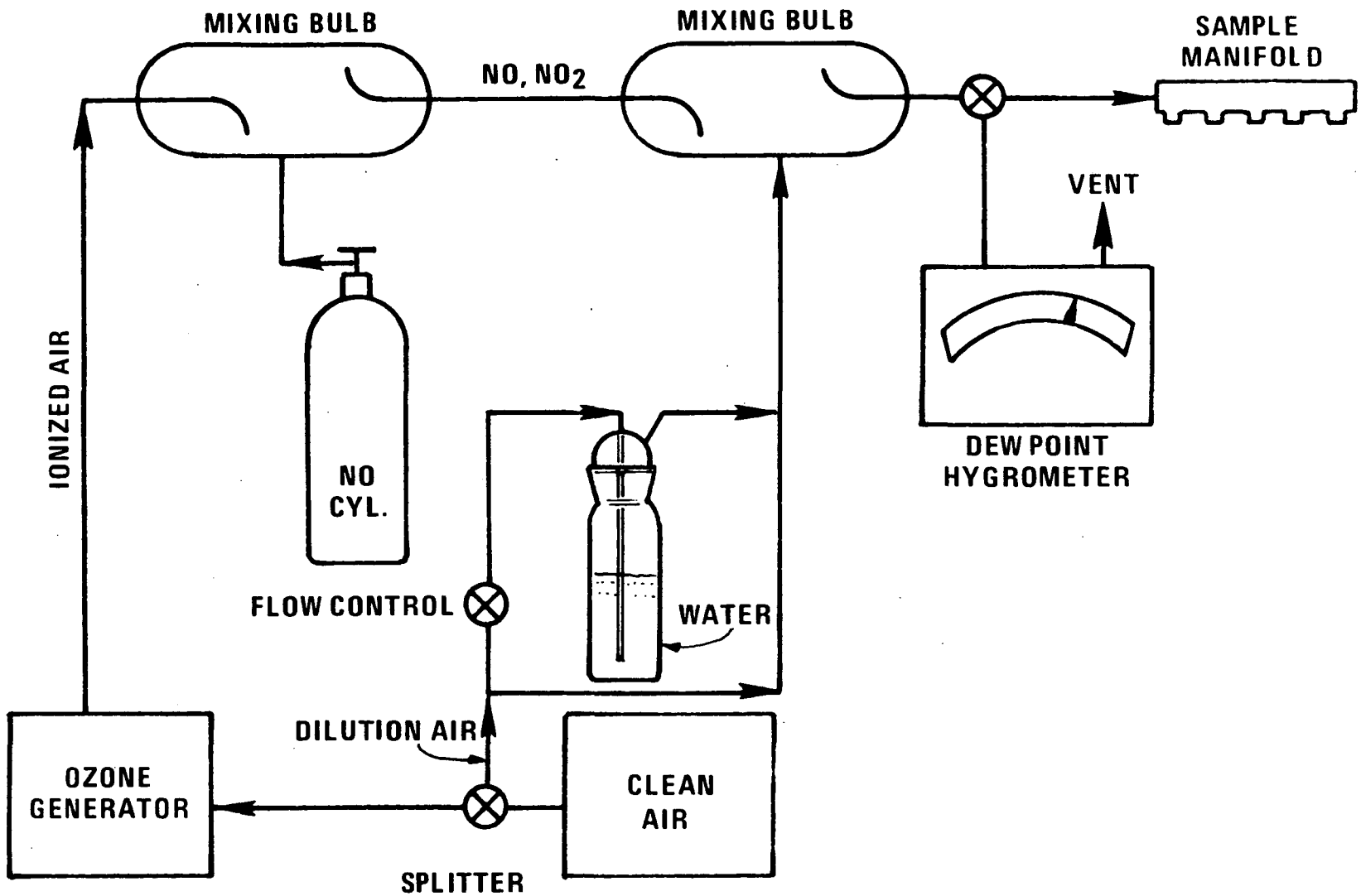

Figure 12. Diagram of modified NO, NO_2 calibration system (gas phase titration).

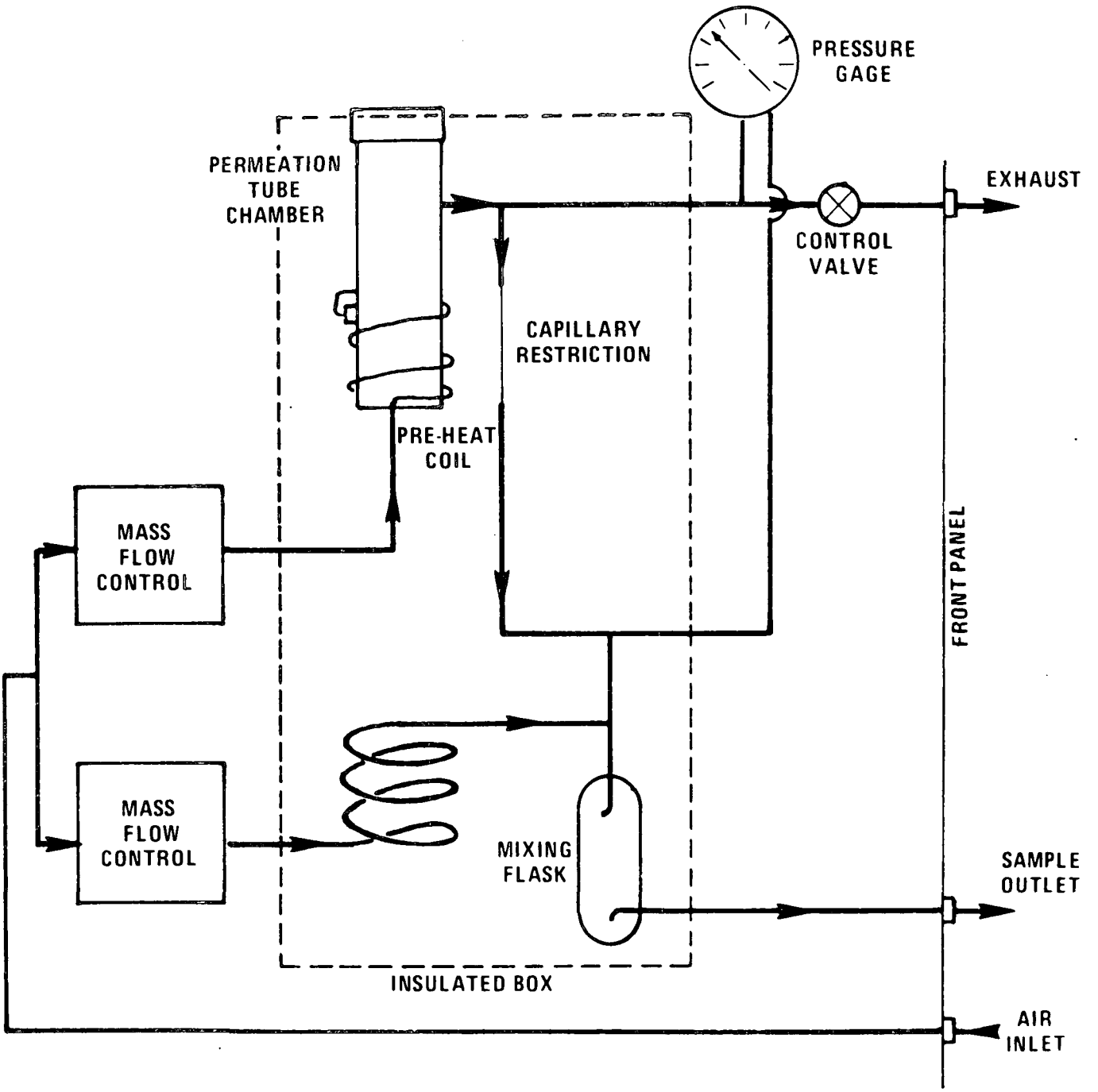

Figure 13. Diagram of RTI double dilution permeation system.

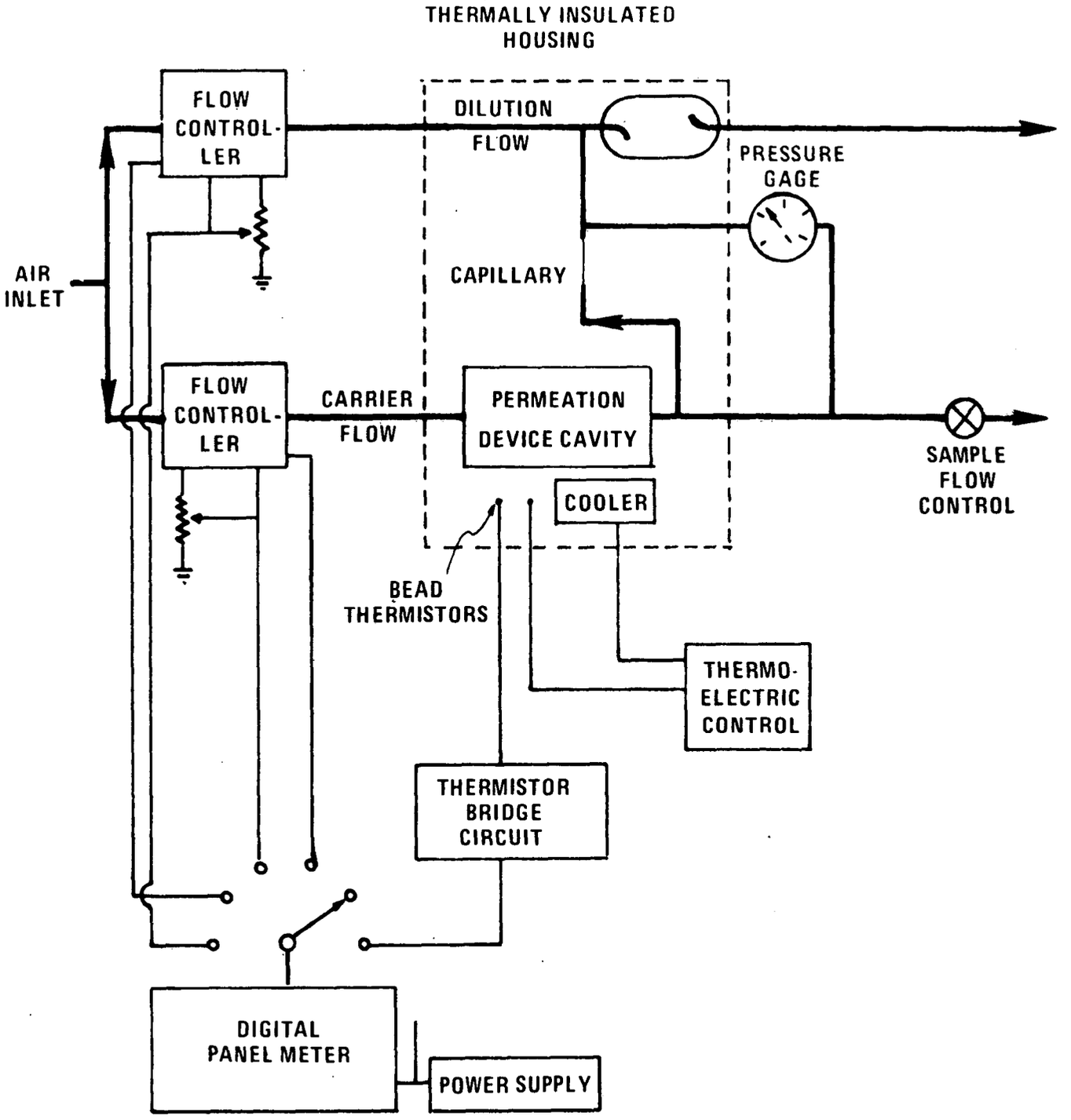

Figure 14. Function diagram, RTI permeation system.

SECTION V

RESULTS

Initial calibration of the Aerochem monitor was accomplished using known NO and NO_2 concentration from 2 to 50 ppb. The response to both NO and NO_2 was determined to be linear with a noise equivalent to 0.25 ppb on a range of 50 ppb full scale. Concentrations up to 50 ppb of NO_2 were generated and the conversion efficiency of NO_2 to NO through the high and low temperature converters was determined to be quantitative (>98%).

Concentrations of NH_3 in dry air were generated in the range of 1.5 to 50 ppb using the RTI double dilution permeation system. The high temperature converter quantitatively converted the NH_3 concentrations while no conversion was indicated in the low temperature converter. A linear response for NH_3 was obtained from 1.5 to 50 ppb. Concentrations of NO and NO_2 were then generated using dry air and were allowed to pass through the ammonia scrubber where no decrease in response for NO or in conversion efficiency for NO_2 was noted. This was true for both channels and both high and low temperature NO_2 converters.

instrument alternately through the scrubber and by-pass. An example of output signal is shown in Figure 15, the 25 ppb concentration of NH_3 was quantitatively removed in the scrubber mode with a cycle time of 10 minutes.

Humidified concentrations of NO and NO_2 from 2 to 50 ppb were then sent through the scrubber and converters into the instrument. The humidity was varied from dry air (RH <5%) to a relative humidity of 70%. Both NO and

NO_2 passed quantitatively through the scrubber and conversion of NO_2 was quantitative in each converter. No losses of humidified NO or NO_2 were observed through the scrubber. Humidified concentrations of NH_3 from 2 to 50 ppb were generated with the modified permeation system. Humidified samples of NH_3 passed quantitatively through the scrubber by-pass into the instrument and were completely removed passing through the scrubber.

Once the tests were completed using a high and low temperature converter, two high temperature converters with the scrubber system in line with one converter were subjected to the same series of tests with humidity. The results are shown in Tables 1 and 2.

The difference in signal output using either two high temperature converters or a high and a low temperature converter with the scrubber system is shown in Figure 16. Part A of Figure 16 shows that when using two high temperature converters, the magnitude of the signal is equal in both channels except when the sample passes through the scrubber to remove NH_3. Part B of Figure 16 shows a signal using a high and low temperature converter. The signals are normally different by the amount of NH_3 present and are equal when the sample passes through the scrubber and the NH_3 is removed.

Once the NH_3 measurement system calibration and performance tests were completed, the system was used to sample ambient air inside the EPA laboratory and was also set up in a van in the parking lot of the EPA facility at Research Triangle Park, N.C. Figure 17 is a recorder trace of the ammonia and NO_x monitored in the parking lot. The measurement system was set up with a high temperature converter in each channel with the scrubber system in channel one. The outputs are equal except when the scrubber is in line and

the NH_3 is being removed by the scrubber. The NO_x plus NH_3 value is approximately 20 ppb. Five ppb of the total signal is NH_3.

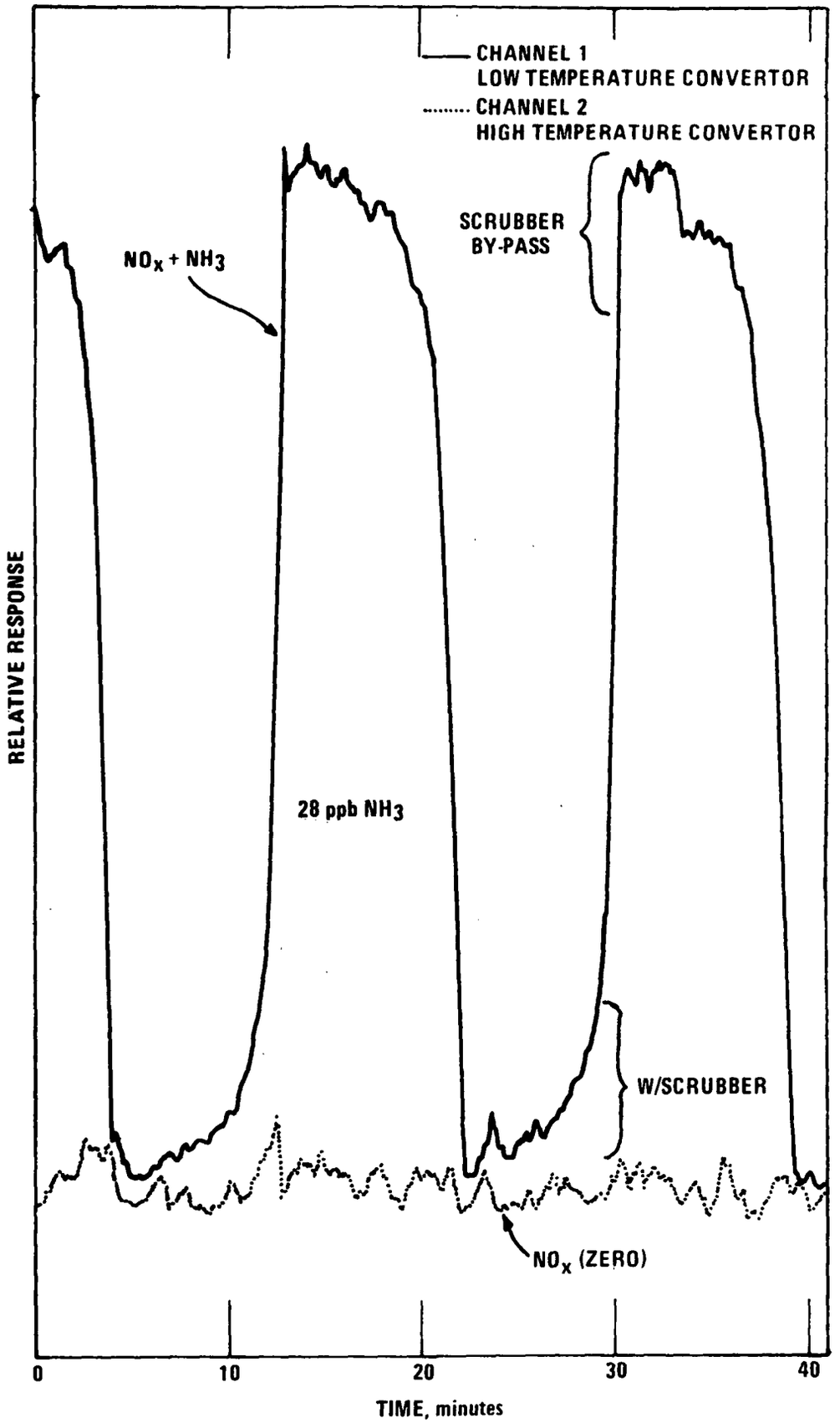

Figure 15. Ammonia response from optimized measurement system.

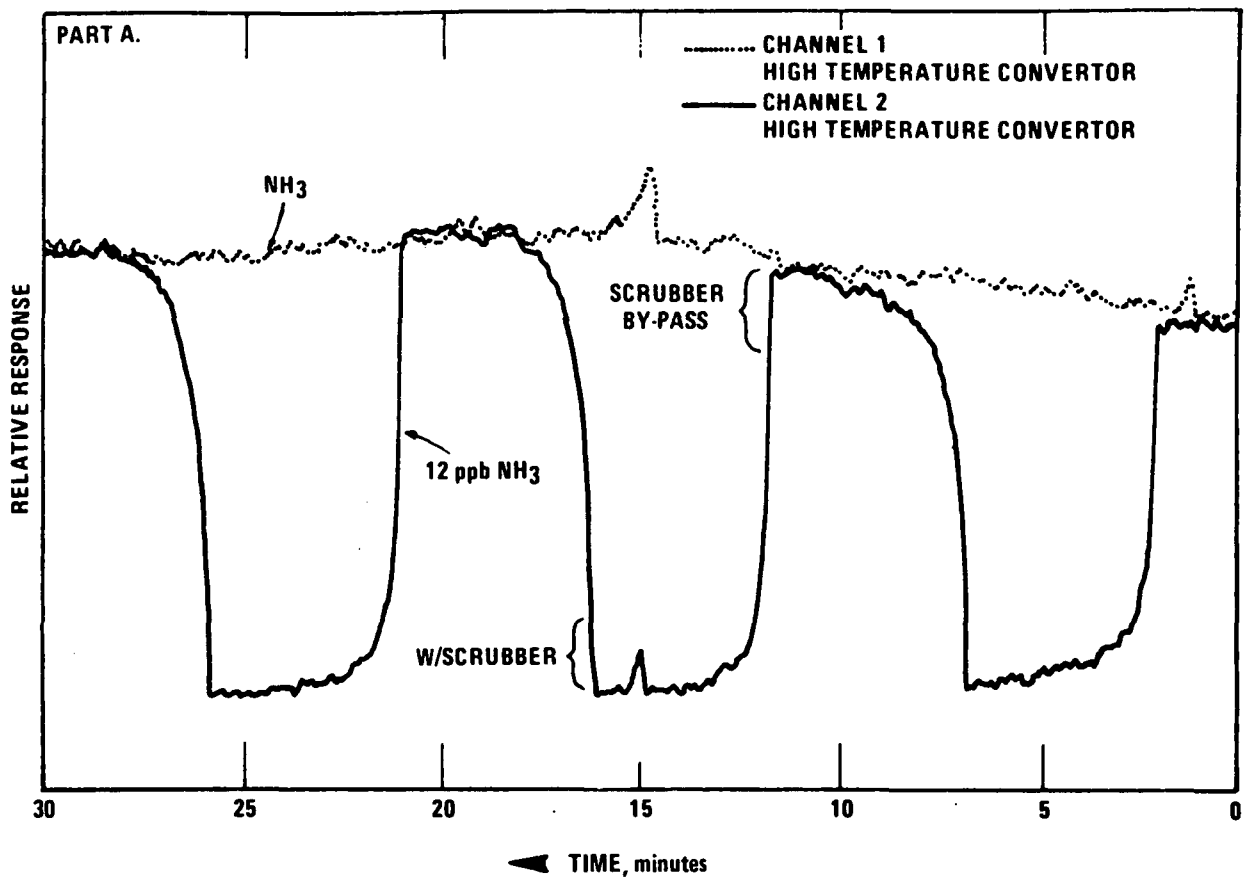

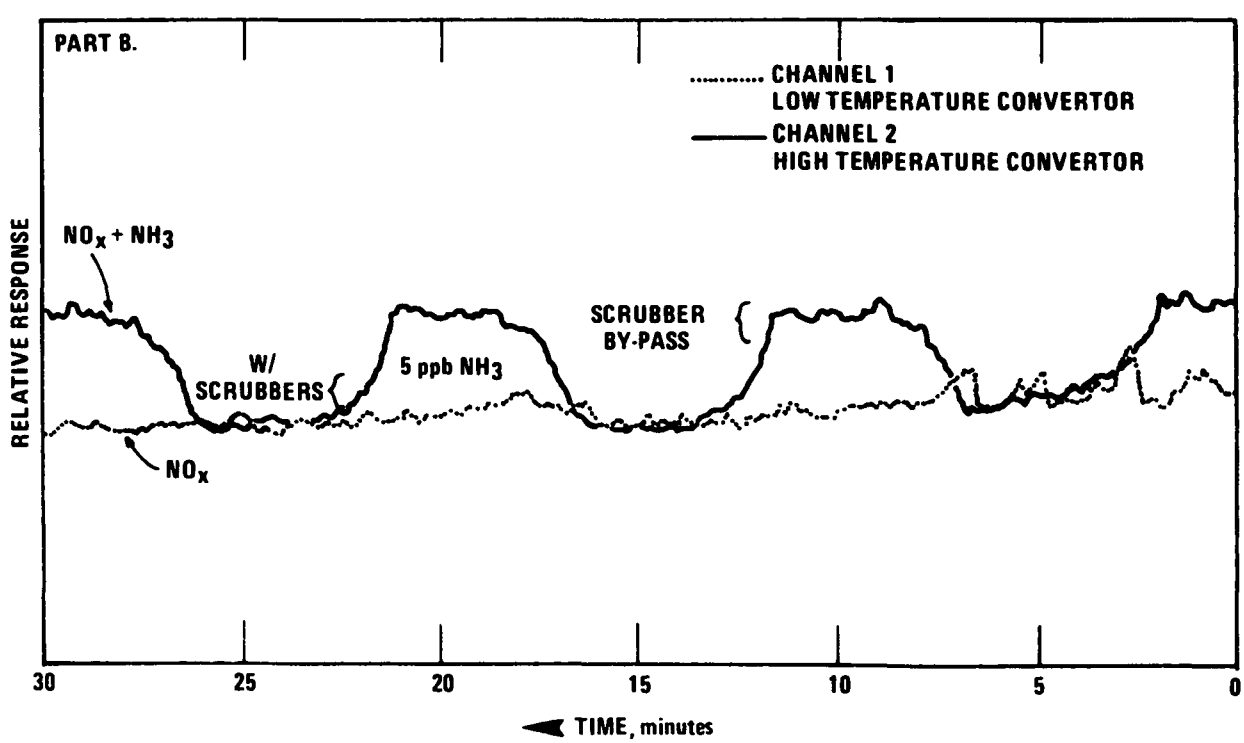

Figure 16. Ammonia response using different converters with the ammonia scrubber system.

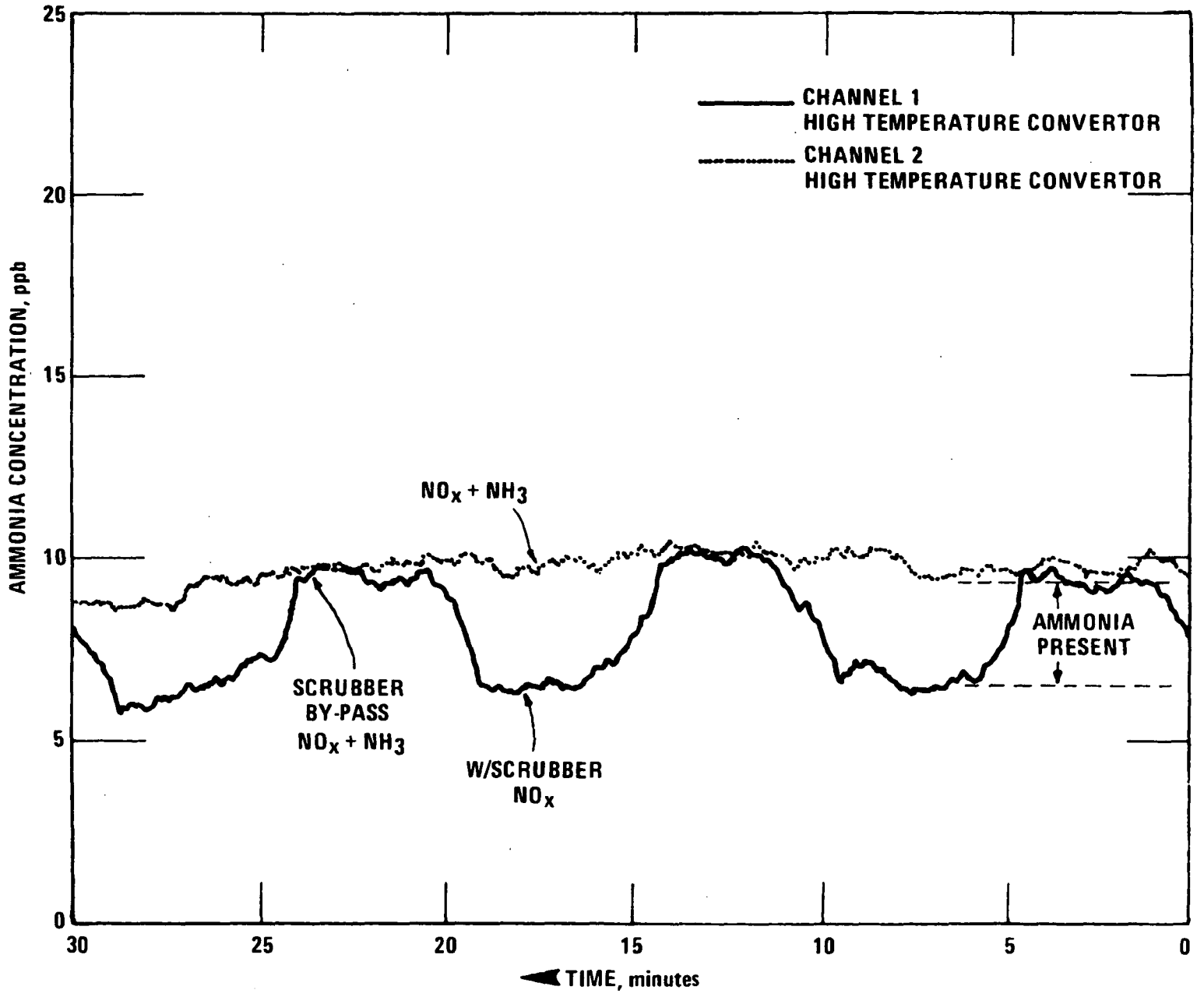

Figure 17. Ambient measurement of ammonia with optimized system.

TABLE 1. SYSTEM RESPONSE TO HUMIDIFIED SAMPLES OF NITRIC OXIDE AND NITROGEN DIOXIDE HIGH TEMPERATURE CONVERTERS

% Relative Humidity	Conc. ppb	Response (% Chart)	Converter	Mode
5%	22 (NO)	45	HTC	By-Pass
	22 (NO)	45	HTC	Scrubber
	22 (NO_2)	45	HTC	By-Pass
	22 (NO_2)	45	HTC	Scrubber
50%	25 (NO)	50	HTC	By-Pass
	25 (NO)	50	HTC	Scrubber
	25 (NO_2)	50	HTC	By-Pass
	25 (NO_2)	50	HTC	Scrubber
70%	22 (NO)	44	HTC	By-Pass
	22 (NO)	44	HTC	Scrubber
	22 (NO_2)	44	HTC	By-Pass
	22 (NO_2)	44	HTC	Scrubber

TABLE 2. SYSTEM RESPONSE TO HUMIDIFIED SAMPLES OF NITRIC OXIDE AND NITROGEN DIOXIDE HIGH (HTC) AND LOW (LTC) TEMPERATURE CONVERTERS

% Relative Humidity	Conc. ppb	Response (% Chart)	Converter	Mode
20%	22 (NO)	45	LTC	By-Pass
	22 (NO)	45	HTC	Scrubber
	22 (NO_2)	45	LTC	By-Pass
	22 (NO_2)	45	HTC	Scrubber
45%	23 (NO)	46	LTC	By-Pass
	23 (NO)	46	HTC	Scrubber
	22 (NO_2)	45	LTC	By-Pass
	22 (NO_2)	45	HTC	Scrubber
70%	20 (NO)	40	LTC	By-Pass
	20 (NO)	40	HTC	Scrubber
	20 (NO_2)	40	LTC	By-Pass
	20 (NO_2)	40	HTC	Scrubber

REFERENCES

1. Robinson, E., and R.C. Robbins. Sources, Abundance and Fate of Gaseous Atmospheric Pollutants. Stanford Research Institute, Menlo Park, California, 1978. pp. 71-73.

2. French, J.C., G. Lowrimore, W.C. Nelson, J.F. Finklea, T. English, and M. Hertz. Arch. Environ. Health, 27:129, 1973.

3. Junge, C.E. Air Chemistry and Radioactivity. Academic Press, New York, New York, 1963. pp. 87-91.

4. Pate, J.B., and J.P. Lodge. Atmospheric Trace Constituents in the Humid Tropics IV. Environmental Measurement in the Tropics. Presented at the 9th Conference on Methods in Air Pollution and Industrial Hygiene Studies, Pasadena, California, 1968. pp. 7057-7064.

5. Healy, T.V., H.A.C. McKay, and A. Pilbean. Ammonia and Related Atmospheric Pollutants at Harwell. AERE-R6231 AERE, United Kingdom Atomic Energy Authority Research Report, Harwell Bervshire, U.K., 1972. pp. 1-20.

6. Breading, R.J., J.P. Lodge, J.B. Pate, D.C. Sheesky, H.B. Klonis, B. Folger, J.A. Anderson, T.R. Englevt, P.L. Haagensov, R.B. McBeth, A.L. Morris, R. Pogue, and A.S. Wartburg. J. of Geophysical Research, 78(30):7057-7063, 1973.

7. Jacobs, M.B. The Chemical Analysis of Air Pollutants. Interscience, New York, New York, 1960. pp. 216-218.

8. Morgan, G.B., C. Golden, and E.C. Tabor. New and Improved Procedures for Gas Sampling and Analysis in the National Air Sampling Network. J. Air Pollution Control Assoc., 17:300-304, 1967.

9. Buck, M., and H.Z. Stratmann. The Use of the Impinger Principle for the Determination of Ammonia in the Atmosphere. Z. Anal. Chemie, 213:241, 1965.

10. Stucliffe, R.A., and G.A. Jones. Research Into Some Methods of Analysis of Sewage. Wat. Pollut. Control, 67:209-220, 1968.

11. Tetlow, J.A., and A.L. Wilson. An Absorptiometric Method for Determining Ammonia in Boiler Feed Water. Analyst, 80:453-465, 1964.

12. Leithe, W., and G. Petch. Anal. Chem., 230:344-347, 1967.

13. Kothny, E.L. Health Lab. Science, 10(2):115-118, 1973.

14. Georgi, H.W., D. Jost, and W.J. Muller. Test of a Method for Measuring Ammonium and Ammonia Concentrations in the PPB Range. Report No. 25. Institute of Meteorology and Geophysics, University of Frankfurt, Frankfurt, Germany, 1973. pp. 1-18.

15. Okita, T., and S. Kamamori. Atmospheric Environment, 5:621-627, 1971.

16. Kruse, J.M., and M.G. Mellon. Colorimetric Determination of Ammonia and Cyanate. Anal. Chem., 25(8):1188-1192, 1953.

17. Vivameu, D.M., and J. Sech. Anal. Chem., 44(2):395-398, 1972.

18. Schiendrikar, A.D., and J.P. Lodge. Atmospheric Environment, 9:431-435, 1975.

19 David, D.J., M.C. Wilson, and D.S. Ruffin. Analytical Letters, 9(4):389-404, 1976.

20. Sawicki, E., J. Mulik, and E. Wittenstein (Eds.). Ion Chromatograph Analysis of Environmental Pollutants. Ann Arbor Science Publishers, Ann Arbor, Michigan, 1978. pp. 41-51.

21. Fontijn, A., A.J. Sabadell, and R. Ronco. Anal. Chem., 42(6):575-579, 1970.

22. Stedman, D.H., E.E. Darby, F. Stull, and H.J. Nikki. Air Pollution Control Assoc., 22:260, 1972.

23. Breitenbach, L.P., and M. Shelef. Air Pollution Control Assoc., 22(2): 128-131, 1973.

24. Sigsby, J.E., F.M. Black, T.A. Bellar, and D.L. Klosterman. Environ. Science and Tech., 7:51-54, 1973.

25. Hodgeson, J.E., K.A. Rehme, B.E. Martin, and R.K. Stevens. Measurements for Atmospheric Oxides of Nitrogen and Ammonia by Chemiluminescence. Paper No. 72-12. Air Pollution Control Assoc. Meeting, Miami, Florida, 1972.

26. Volltrauer, H.N. Instructions Manual for Ultra Sensitive NO/NO_x Monitor, Aero Chem. Research Laboratories, Inc., Princeton, New Jersey, 1976.

27. Durham, J.C., W.E. Wilson, and E.B. Bailey. Continuous Measurement of Sulfur in Submicrometric Aerosols. EPA 600/3-76-088. U.S. Environmental Protection Agency, RTP, North Carolina, 1975. pp. 1-25.

28. Rehme, K.A., B.E. Martin, and J.A. Hodgeson. Tentative Method for the Calibration of Nitric Oxide, Nitrogen Dioxide, and Ozone Analyzers by Gas Phase Titration. EPA-R2-73-246. U.S. Environmental Protection Agency, RTP, North Carolina, 1974.

29. White, H., and R. Strong. Double Dilution Permeation System, Task No. 2, Contract EPA 68-02-2291, Research Triangle Institute, RTP, North Carolina, 1976.

TECHNICAL REPORT DATA
(Please read Instructions on the reverse before completing)

1. REPORT NO. EPA-600/2-79-028	2.	3. RECIPIENT'S ACCESSION NO.
4. TITLE AND SUBTITLE OPTIMIZED CHEMILUMINESCENCE SYSTEM FOR MEASURING ATMOSPHERIC AMMONIA		5. REPORT DATE February 1979
		6. PERFORMING ORGANIZATION CODE
7. AUTHOR(S) Ralph E. Baumgardner, W.A. McClenny and R.K. Stevens		8. PERFORMING ORGANIZATION REPORT NO.
9. PERFORMING ORGANIZATION NAME AND ADDRESS Environmental Sciences Research Laboratory Office of Research and Development U.S. Environmental Protection Agency Research Triangle Park, N.C. 27711		10. PROGRAM ELEMENT NO. 1AD712 BB-12 (FY-78)
		11. CONTRACT/GRANT NO.
12. SPONSORING AGENCY NAME AND ADDRESS Environmental Sciences Research Laboratory -- RTP, NC Office of Research and Development U.S. Environmental Protection Agency Research Triangle Park, N.C. 27711		13. TYPE OF REPORT AND PERIOD COVERED In-house
		14. SPONSORING AGENCY CODE EPA/600/09
15. SUPPLEMENTARY NOTES		

16. ABSTRACT

The optimization and testing of a continuous measurement system for analyzing atmospheric ammonia concentrations (0 to 10 ppb) is described. The measurement system combines an ultra-sensitive chemiluminescence nitric oxide detector, with a thermal converter for NH_3 to nitric oxide (NO) conversion, and an acidic scrubber for alternate removal of NH_3 from the sample stream.

The chemiluminescence monitor with a high temperature converter will give a combined measurement of NO, NO_2 and NH_3. Other nitrogen containing compounds, if present, may also be converted. By placing an acidic scrubber in the sample line, the ammonia will be removed and a combined measurement of NO_x (NO and NO_2) will be obtained. By taking the signal difference when the scrubber is in or out of the sample line, the concentration of NH_3 can be determined.

Performance tests were conducted on the total measurement systems to verify its capability to measure NO, NO_2 and NH_3 under laboratory conditions as well as ambient monitoring conditions. A dynamic calibration system capable of generating 1 ppb of NH_3 was used for the testing. The calibration system is a double dilution permeation system.

17. KEY WORDS AND DOCUMENT ANALYSIS

a. DESCRIPTORS	b. IDENTIFIERS/OPEN ENDED TERMS	c. COSATI Field/Group
*Air pollution		13B
*Ammonia		07B
Nitrogen oxides		
*Monitors		07D
*Chemiluminescence		20F
Evaluation		

18. DISTRIBUTION STATEMENT RELEASE TO PUBLIC	19. SECURITY CLASS *(This Report)* UNCLASSIFIED	21. NO. OF PAGES 45
	20. SECURITY CLASS *(This page)* UNCLASSIFIED	22. PRICE

EPA Form 2220-1 (9-73)