United States
Environmental Protection
Agency

Industrial Environmental Research
Laboratory
Research Triangle Park NC 27711

EPA-600/2-78-118c
June 1978

Research and Development

EPA

Pollution Effects of Abnormal Operations in Iron and Steel Making - Volume III. Blast Furnace Ironmaking, Manual of Practice

RESEARCH REPORTING SERIES

Research reports of the Office of Research and Development, U.S. Environmental Protection Agency, have been grouped into nine series. These nine broad categories were established to facilitate further development and application of environmental technology. Elimination of traditional grouping was consciously planned to foster technology transfer and a maximum interface in related fields. The nine series are:

1. Environmental Health Effects Research
2. Environmental Protection Technology
3. Ecological Research
4. Environmental Monitoring
5. Socioeconomic Environmental Studies
6. Scientific and Technical Assessment Reports (STAR)
7. Interagency Energy-Environment Research and Development
8. "Special" Reports
9. Miscellaneous Reports

This report has been assigned to the ENVIRONMENTAL PROTECTION TECHNOLOGY series. This series describes research performed to develop and demonstrate instrumentation, equipment, and methodology to repair or prevent environmental degradation from point and non-point sources of pollution. This work provides the new or improved technology required for the control and treatment of pollution sources to meet environmental quality standards.

REVIEW NOTICE

This report has been reviewed by the U.S. Environmental Protection Agency, and approved for publication. Approval does not signify that the contents necessarily reflect the views and policy of the Agency, nor does mention of trade names or commercial products constitute endorsement or recommendation for use.

This document is available to the public through the National Technical Information Service, Springfield, Virginia 22161.

EPA-600/2-78-118c
June 1978

Pollution Effects of Abnormal Operations in Iron and Steel Making - Volume III. Blast Furnace Ironmaking, Manual of Practice

by

R. Jablin, D.W. Coy, B.H. Carpenter, and D.W. VanOsdell

Research Triangle Institute
P.O. Box 12194
Research Triangle Park, North Carolina 27709

Contract No. 68-02-2186
Program Element No. 1AB604

EPA Project Officer: Robert V. Hendriks

Industrial Environmental Research Laboratory
Office of Energy, Minerals, and Industry
Research Triangle Park, NC 27711

Prepared for

U.S. ENVIRONMENTAL PROTECTION AGENCY
Office of Research and Development
Washington, DC 20460

PREFACE

This study of the environmental effects of substandard, breakdown, or abnormal operation of steelmaking processes and their controls has been made to provide needed perspective concerning these factors and their relevance to attainment of pollution control. The use of the term Abnormal Operating Condition (AOC) herein, in characterizing any specific condition should not be construed to mean that any operator is not responsible under the Clean Air Act as amended for designing the systems to account for potential occurrence in order to comply with applicable State Implementation Plans or New Source Performance Standards.

ACKNOWLEDGMENT

This report presents the results of a study conducted by the Research Triangle Institute (RTI) for the Industrial Environmental Research Laboratory of the Environmental Protection Agency (EPA) under Contract 68-02-2186. The EPA Project Officer was Mr. Robert V. Hendriks.

The project was carried out in RTI's Energy and Environmental Research Division under the general direction of Dr. J. J. Wortman. The work was accomplished by members of the Process Engineering Department's Industrial Process Studies Section, Dr. Forest O. Mixon, Jr., Department Manager, Mr. Ben H. Carpenter, Section Head.

The authors wish to thank the American Iron and Steel Institute for their help in initiating contacts with the various steel companies and for their review of this report. Members of the AISI study committee were: Mr. William Benzer, American Iron and Steel Institute; Mr. Stephen Vajda, Jones and Laughlin Steel Corporation; Dr. W. R. Samples, Wheeling-Pittsburgh Steel Corporation; Mr. Tedford M. Hendrickson, Youngstown Steel; and Mr. John R. Brough, Inland Steel Company. Acknowledgment is also given to the steel companies who participated in this study.

TABLE OF CONTENTS

	Page
LIST OF FIGURES	vi
LIST OF TABLES	vii
INTERNATIONAL SYSTEM OF UNITS AND ALTERNATIVE (METRIC) UNITS WITH CONVERSION FACTORS	viii
1.0 INTRODUCTION	1
1.1 Purpose and Scope	1
1.2 Definition of AOC	2
2.0 DISCUSSION OF THE BLAST FURNACE IRONMAKING PROCESS, NORMAL OPERATION	3
2.1 Process Flow Sheet	3
2.2 Material Balance	6
2.3 Methods of Operation	7
Charging	8
Emissions	13
Emissions Controls	14
Water Pollution	15
3.0 CONTROL TECHNIQUES AND EQUIPMENT	18
3.1 Type of Control Equipment Used	18
3.1.1 Blast Furnace Gas	18
3.1.2 Blast Furnace Scrubber Water	20
3.1.3 Material Handling Emissions	26
3.1.4 Cast House Emissions	27
4.0 ABNORMAL OPERATING CONDITIONS	30
4.1 Process Related	31
4.1.1 Startup	31
4.1.2 Shut Down	34
4.1.3 Abnormal Operating Conditions	38
Slips	38
Backdrafting	42
Water and Power Failures	45
Breakouts	46
Charging Dusty Material	48
Gas Cleaning System	49
Gas Bleeders	51
Carbon Black Formation	52
Furnace Control	53

TABLE OF CONTENTS (cont'd)

	Page
4.2 Control Equipment Related	55
4.2.1 Startup	55
4.2.2 Shut Down	56
4.2.3 Abnormal Operating Conditions	57
Water Quality	57
Pumps	65
General Operation	69
5.0 GRAY AREAS	74
Emissions from Bells	74
Blast Furnace Top Emissions from Bells	75
Emissions from Casting	79
Tap Hole Related	79
Casting Emissions	80
Burning of Skull	81
5.1 Methods for Minimizing AOC	81
5.1.1 Process Related	81
5.1.2 Control Equipment Related	82
5.2 General	82
6.0 TABULATED SUMMARY OF AOC	85
7.0 REFERENCES	91

LIST OF FIGURES

Figure		Page
1	Blast furnace plant with auxiliary equipment	4
2	Blast furnace	5
3	Instrumentation and computer control system of blast furnace	10
4	Inland Steel recirculating water system	23
5	U.S. Environmental Protection Agency BPCTCA Model	24
6	Cast house dust collection system	29
7	Schematic illustration of blast furnace top	37
8	Backdrafting through blast furnace stove	43
9	Tons of iron accumulated on hearth during years of service	47
10	Swirl nozzle with replaceable insert arranged centrally above the throat of the scrubber	59
11	Disintegration of the scrubbing liquid above the throat without any gas flow	59
12	Disintegration of the scrubbing liquid with the droplets exposed to the action of the gas flow	60
13	Swirl nozzles after years of operation	60
14	Inland Steel blast furnace water system	71
15	Gas cleaning system for No. 13 Blast Furnace - U.S. Steel, Gary Works	73
16	Plot of the data presented in Table 8	77
17	Example of AOC report form	84

LIST OF TABLES

Table		Page
1	Effluent Material Generated in a "Once-Through" System	22
2	BPCTA - Effluent Limitations Guidelines	25
3	Gary Works, #13 Blast Furnace Major Delays	33
4	Effect of Alkali on Production at Geneva Blast Furnaces	40
5	Quantities of Cyanide and Phenols from BF and Sinter Plant -- Plant A	61
6	Reports from NPDES Files -- Malfunctions in Scrubber Water System	62
7	Analysis of Flue Dust Particles	75
8	Particle Size of Blast Furnace Dust	76
9	Blast Furnace Abnormal Operating Conditions	86

INTERNATIONAL SYSTEM OF UNITS AND ALTERNATIVE (METRIC) UNITS WITH CONVERSION FACTORS

Quantity	SI Unit/Modified SI Unit	Equivalent To
mass	kg	2.205 lb
	Mg (megagram = 10^6 grams)	2205 lb
	Mg	1.1025 ton
	Gg (gigagram = 10^9 grams)	
volume	m^3 (cubic meter)	35.32 cf
	dscm (dry standard cubic meter)	
	scm (standard cubic meter: 21°C, 1 atm)	
	ℓ (liter = 0.001 m^3)	
concentration or rate	g/m^3 (grams/m^3)	0.437 gr/ft^3
	mg/m^3 (milligrams/m^3)	0.000437 gr/ft^3
	g/kg	2 lb/ton
energy	J (joule)	0.000948 Btu
	kJ/m^3 (kilojoules/m^3)	0.02684 Btu/ft^3
	MJ (megajoules = 10^6 joules)	
	MJ/Mg	0.430 Btu/lb
		859 Btu/ton
force	kPa (kiloPascal)	0.146 lb/in^2
	1 Pascal = 1 N/m^2 (Newton/m^2)	
area	m^2 (square meter)	10.76 ft^2

1.0 INTRODUCTION

1.1 PURPOSE AND SCOPE

Air and water pollution standards, generally based upon control of discharges during normal (steady-state) operation of a control system, are frequently exceeded during "upsets" in operation. When such upsets become repetitive and frequent, the regional and local enforcement agencies undertake, through consent agreements, to work with the plant toward resolution of the problem, and plans are developed for such equipment and operating practice changes as will eliminate or alleviate the frequent violations. Should the planning process fail to resolve abnormally frequent occurrences of malfunctions, the problem may lead to litigation. Thus, periods of abnormal operation are becoming recognized as possibly contributing to the emissions of high concentrations of pollutants. Similarly, upsets may contribute to spills of increased amounts of effluent-borne pollutants into waterways.

There is a need for information concerning abnormal operating conditions (AOC): their identity, cause, resulting discharges, prevention, and minimization.

The purpose of the manual is to alert those who deal with environmental problems on a day-to-day basis to the potential problem areas caused by abnormal conditions, to assist in determining the extent of the problem created by abnormal conditions in a specific plant, and to provide help in evaluating any efforts to reduce or eliminate the problems. The processes considered are those in the primary section of the integrated iron and steel plant. Included are the sintering, blast furnace ironmaking, open hearth, electric arc furnace, and basic oxygen steelmaking. This manual covers the blast furnace ironmaking process.

This manual is based on reviews of somewhat limited data, visits to a few of the many steel plants, interviews with persons intimately involved in either steelmaking or attendant environmental regulations, and the expertise of the study team. It is, therefore, a preliminary assessment which concentrates on enumerating as many of the conditions as possible, with emphasis on those which have the most severe environmental impact.

Each process is described separately. Descriptions include flow diagrams and material balances, operating procedures and conditions. The flow sheets and material balances presented are representative of the most typical process configurations.

Within each process are variations, both in the process itself and in the equipment for control of pollution. Variations in equipment and process are accompanied by variations in AOC. It is, therefore, of value to identify as many of the variations as possible. At the same time, it is necessary to limit consideration of the numerous alternatives to those which are currently in greatest application and use.

1.2 DEFINITION OF AOC

In general, an abnormal operating condition (AOC) is considered to be that which departs from normal, characteristic or steady-state operation, and results in increased emissions or discharges. In addition to abnormal operations, this study includes the startup and shutdown difficulties of processes and control equipment. It also includes substantial variations in operating practice and process variables, and outages for maintenance, either scheduled or unscheduled.

The use of the term Abnormal Operating Condition (AOC) in characterizing any specific condition should not be construed to mean that any operator is not responsible under the Clean Air Act as amended for designing the systems to account for potential occurrence in order to comply with applicable State Implementation Plans or New Source Performance Standards.

2.0 DISCUSSION OF THE BLAST FURNACE IRONMAKING PROCESS, NORMAL OPERATION

The blast furnace converts iron oxide to molten iron. A typical burden (feed) comprises ore, sinter, limestone, and coke. The coke provides thermal energy for the process. The limestone becomes calcined, melts, reacts with and partially removes sulfur from the molten iron.

The burden material is charged into the top of the furnace and descends slowly. Heated air is injected through tuyeres near the bottom of the furnace. The air moves countercurrent to the burden, consuming the coke carbon thereby providing energy for the process. Blast furnace gas leaves through offtakes at the top of the furnace, is cleaned of particulates and used as a byproduct fuel. Molten iron and slag are tapped periodically from the bottom of the furnace.

2.1 PROCESS FLOW SHEET

A flow sheet for the blast furnace ironmaking process is shown in Figure 1.

Burden material is charged through a device which allows the entry of lump material and restricts the outward flow of blast furnace gas. Blast furnaces are generally over 100 feet tall and may be 30 feet or more in hearth diameter. The blast furnace, Figure 2, is roughly pear-shaped, with the hot metal and slag formed at the hearth. The furnace uses more air than any other raw material, by weight. Thermal economy demands that this air be preheated before it is injected into the hearth through a series of tuyeres (nozzles). The air consumes coke to provide heat for the process. Coke also is consumed by reaction with the iron oxide, reducing it to molten iron.

Blast furnace gas, which is mostly carbon monoxide (1/3) and nitrogen (2/3), leaves the top of the furnace through offtakes. The flow of gas through the burden entrains dust. The dust is removed by a dust catcher (which is a low efficiency cyclone) and a high energy wet scrubber. A gas cooler lowers the temperature of the gas, thereby condensing most of its water vapor and making it suitable for use as fuel.

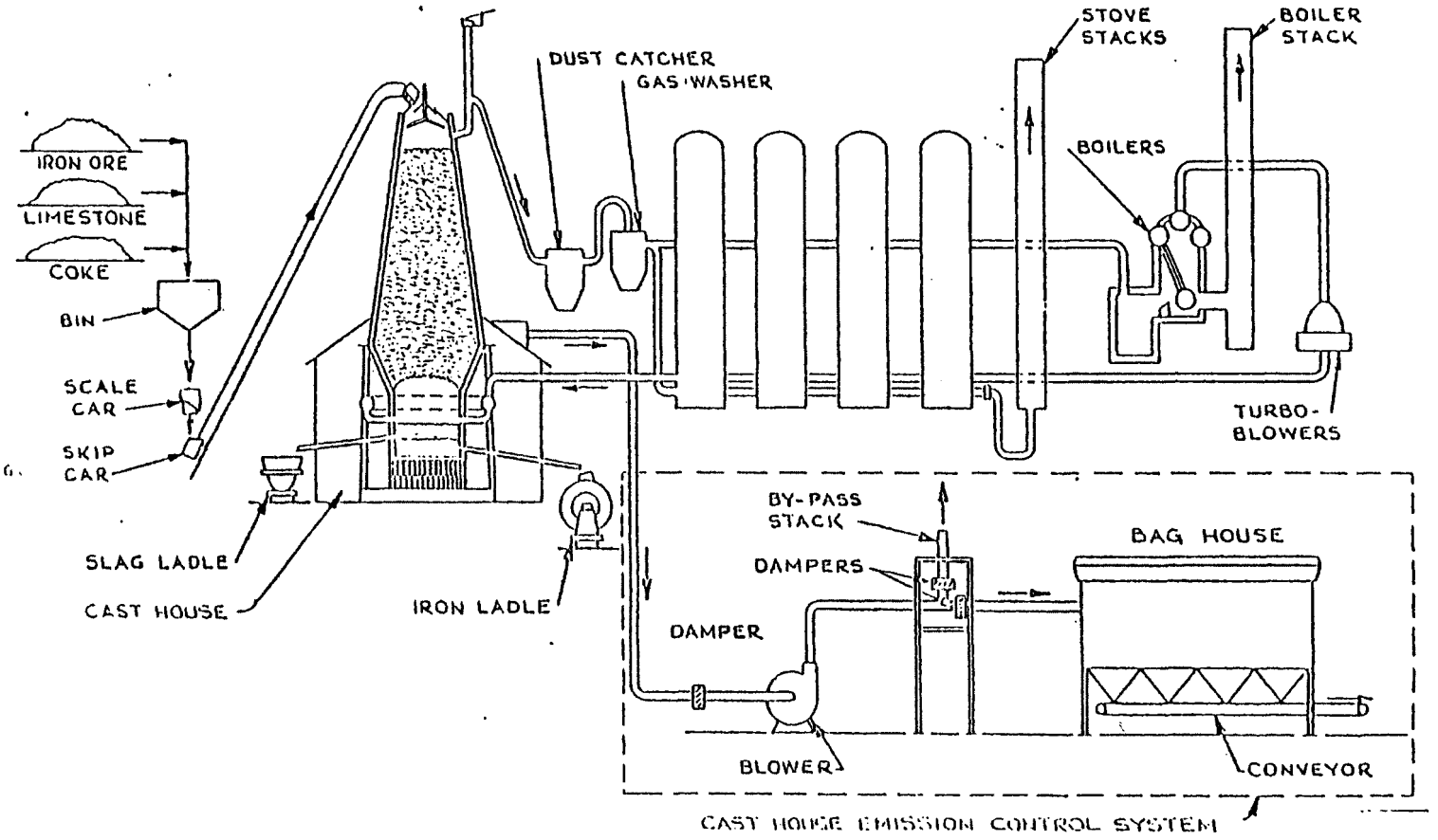

Figure 1. Blast furnace plant with auxiliary equipment.

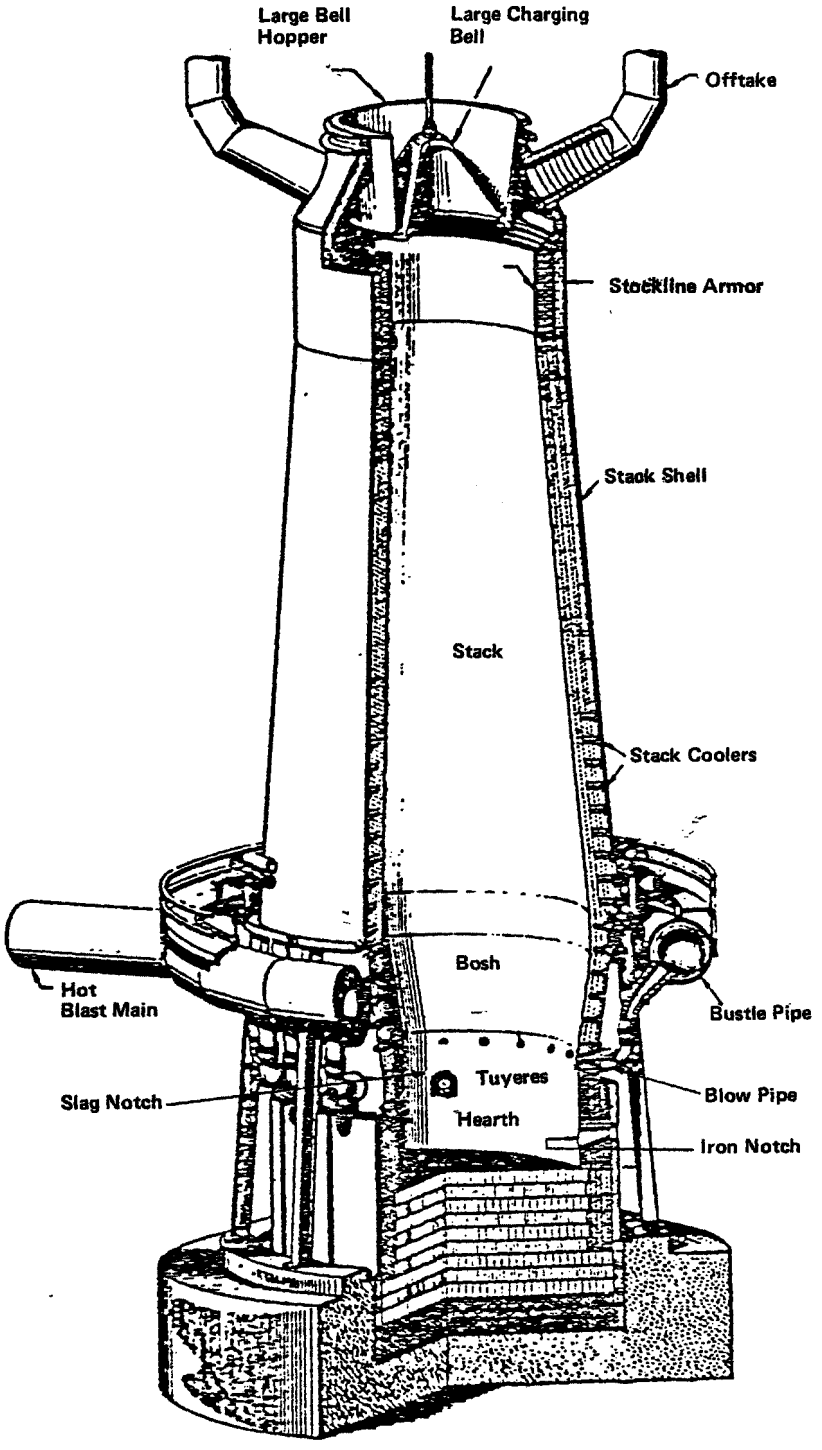

Figure 2. Blast furnace.

The clean, cool gas is generally burned in blast furnace stoves and in the boilers of the power plant. It is also used as an auxiliary fuel in the coke ovens, the soaking pits and elsewhere in the steelmaking complex.

Molten iron and slag are withdrawn in batches at periodic intervals from the hearth of the blast furnace. The usual time between taps is 3 to 4 hours. Tapping is accomplished by drilling out or burning out the tap hole. Iron and slag flow from the tap hole into a small pool where slag floats to the top. Separate runner systems in the floor of the cast house carry the iron from the pool to iron ladles and the slag from the pool to either slag ladles or to a slag pit. The ladles of iron are transported by railroad to the steelmaking facility or, less frequently, to a pig casting machine. The ladles of slag are transported to a disposal area where the slag is dumped. The solidified slag may be crushed and then used as aggregate for concrete, roadbeds, etc.

2.2 MATERIAL BALANCE

In order to produce a ton of molten iron in the blast furnace the following burden materials are required:

1. Iron oxide materials, either lump ore, ore pellets, or sinter--3,000 to 3,400 pounds.

   The variation in quantity of iron oxide material is due primarily to the degree of beneficiation. Oxide materials may be supplemented by fine scrap such as turnings, or even by partially reduced ore pellets. The distribution of the various oxide materials is flexible; for example, the burden may have all pellets and no ore or sinter.

2. Flux materials--500 to 1200 pounds

   The variation is due to the impurities in the burden. The more sulfur the burden contains, the higher the flux requirements. Flux is principally limestone/dolomite with some silica added to control fluidity of the slag. Flux may be used as stone or combined with the sinter. In the latter case, the flux is calcined by the sintering process and the thermal requirements of the blast furnace are reduced.

3. Fuel

   The range of fuel for a blast furnace, expressed as pounds of coke equivalent per ton of iron is 1000-1500 pounds.

Factors that decrease the quantity of fuel are decreased amounts of ore or flux, increased blast air temperature, adequate sizing and screening of the burden and increased efficiency of operating controls.

Although coke is the primary fuel, other fuels may be substituted for it in equivalent amounts. Anthracite coal lumps, in moderate quantities, may be charged into the top of the furnace. Fuel oil or pulverized coal may be injected through the tuyeres. Finally, oxygen may be added to the blast air. This latter procedure, although not a substitution of fuel, decreases the amount of nitrogen that is heated in the blast furnace gas and the amount of total fuel required for the process.

4. Other Materials

The amount of slag produced is essentially a function of the amount of flux charged into the blast furnace. The amount of dust in the blast furnace gas is a function of character of the burden and the amount of fine material contained in it. The less fines there are in the burden, the less dust is carried out with the gas.

2.3 METHODS OF OPERATION, PROCEDURES

The blast furnace is a vertical shaft furnace (Figure 1). Raw materials are charged into the top of the furnace and as they descend in the furnace, they are heated by a countercurrent flow of gas. Heated air (the hot blast or wind) is injected through tuyeres which are located near the bottom of the furnace just above the hearth. Figure 2 shows a diagram of a typical blast furnace.

The system of introducing raw materials to the blast furnace is usually a system of two or three pressure sealing bells at the top of the furnace. Research has shown that blast furnace production can be increased by operating the furnace under high positive pressures of approximately 100 in. H_2O as measured at the top of the furnace. This high top pressure must be dissipated before the cleaned blast furnace gas is distributed as plant fuel.

As raw materials are introduced at the top of the blast furnace they fall to the top of the burden of raw materials already in the furnace. The hottest temperature zone in the blast furnace is at the hearth level, where the burden is molten. One operating problem with blast furnaces is maintaining an even

downward flow of the burden toward the hearth. At times the burden does not slide downward uniformly because of an arch of partially melted raw material. If this arch breaks precipitously or "slips", the furnace top pressure increases abruptly. This opens a safety valve to prevent rupturing of furnace components and results in heavy particulate discharges from the top of the blast furnace. Improved control of furnace operation and improved raw materials have reduced the frequency of these slips.

A modern blast furnace is capable of fully automatic or semi-automatic operation.

The furnace filling is contolled by the level of the burden in the furnace. When the level is below a preset (adjustable) point, the stockhouse functions continuously, filling the skips with predetermined weights of material in the ordered sequence.

Charging

A typical charging control system consists of the following electrically independent sub-systems:

1. Coke supply system consisting of:
    a. bin vibrating feeder
    b. vibrating screen
    c. weigh hopper gate
    d. interlock with fines handling system
2. Limestone and slag supply system consisting of:
    a. limestone bin vibrating feeder
    b. slag bin vibrating feeder
3. Ferrous materials supply system consisting of:
    a. Sinter, ore, and pellet bin vibrating feeder
    b. ferrous materials supply conveyors
    c. ferrous materials vibrating screens
    d. ferrous materials screen discharge chute gates
    e. ferrous materials weigh hopper gates
    f. interlock with fines handling system

4. Water charging and metering system
5. Dual-drive skip hoist
6. Furnace top operating equipment consisting of:
    a. gas seal valves
    b. gas seal seat steam purging valves
    c. gas seal seat steam blowoff valves
    d. equalizer valve
    e. relief valve
    f. revolving chute
    g. small bell
    h. large bell
    i. stockline recorder test rods

Control of charging has improved in recent years. An example of a newer system is found on Figure 3.[1]

Ironmaking in the blast furnace is essentially a continuous process. When all process conditions, including the nature of the burden, are under control, smooth operation results and emissions and discharges from abnormal operations are generally absent. It is obviously to the advantage of the operator to achieve good control of the process because it provides stable operation which increases production and decreases operating costs. Good control of the process also reduces adverse impact on the environment. Good operating conditions generally assure an operating reliability of 95 percent, that is, the furnace is on-line for 95 percent of the time. One company reported 96 1/2 percent reliability over a long period of operation.[13]

Good control of the blast furnace process is of special importance in minimizing AOC's. Such control acts in two ways. First, a smoothly operating furnace is conducive to minimizing such environmental factors as slips, contamination in blast furnace scrubber water, and emissions from casting. Second, a smoothly operating furnace invariably minimizes the consumption of coke per ton of iron produced. The less coke consumed, the lower are the mass of emissions from the coke plant.

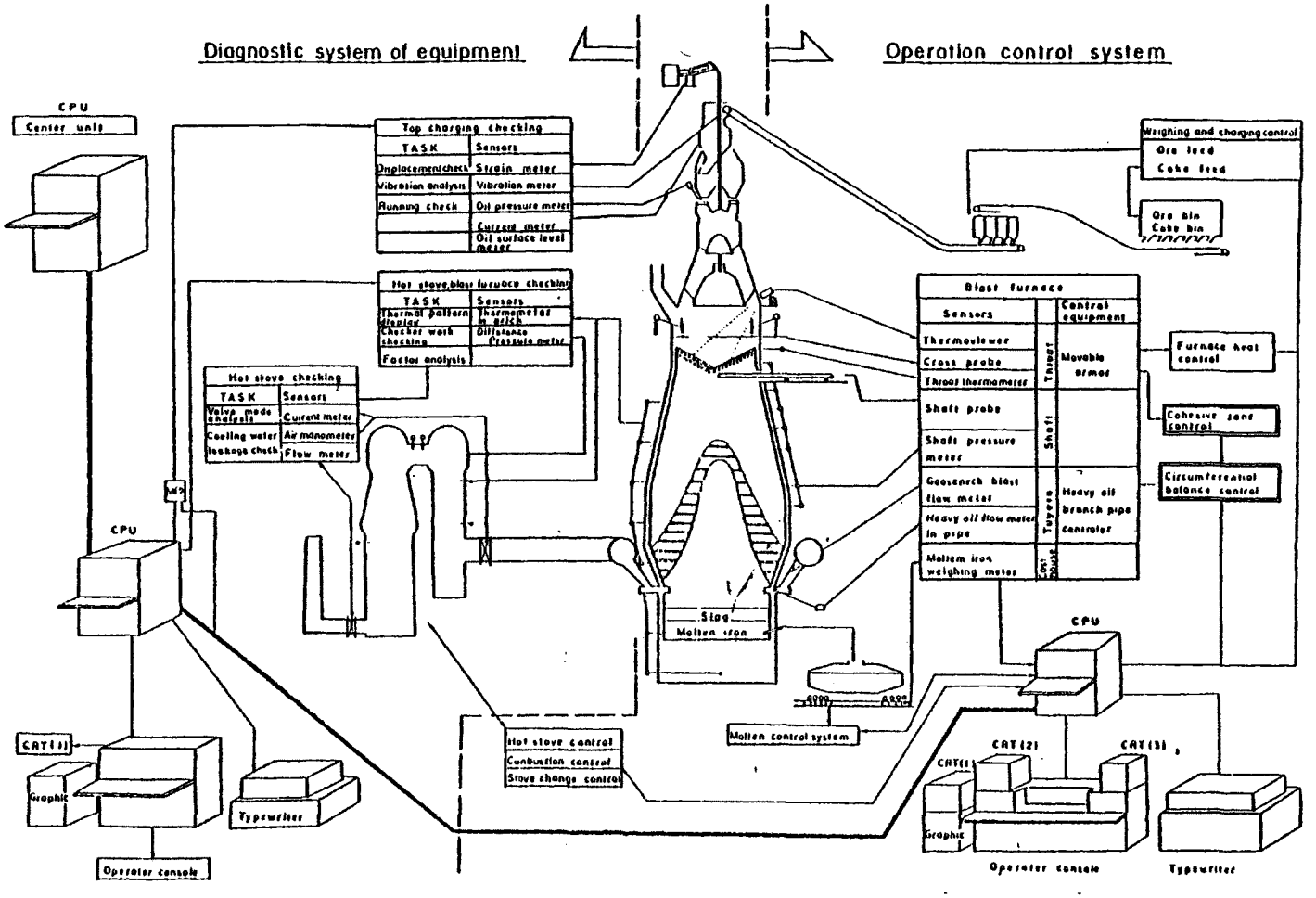

Figure 3. Instrumentation and computer control system of blast furnace.

In the blast furnace process, the heated raw materials react chemically with one another. The principal set of reactions are the complex ones between coke, air, and iron ore. Part of the coke is consumed by the oxygen in the air to produce heat for the process. Another part of the coke combines with the oxygen in the iron ore and releases free iron which melts, drips to the bottom of the furnace, and collects in the hearth. A final portion of the carbon, approximately 4 percent, dissolves in the iron.

The heat of the blast also serves to calcine the limestone. The resulting CaO reacts with the impurities in the ore, principally sulfur, and, in molten form, descends to the hearth. The slag, being about one third the density of the iron, floats in a separate layer on the iron bath.

The blast furnace gases are reducing in nature. The reactions described above produce a substantial amount of carbon monoxide, although a small percentage of carbon dioxide comes off as well. Carried out of the furnace with the gases are dusts which are principally a mixture of iron oxides, lime, and carbon. The gases are low-calorie, usually between 70 and 100 BTU per cubic foot.

About 30 percent of the blast furnace gas is utilized to preheat the hot air blast by means of blast furnace stoves. The remainder is used for other heating purposes through the steel plant: the production of steam in boilers, the underfiring of coke ovens, heating of steel ingots, etc.

The stoves, generally 3 or 4 per blast furnace, are tall cylinders of steel plate which are almost completely filled with special refractory shapes. The arrangement of the shapes in a modern stove provides a large number of gas passages which are small in diameter. Blast furnace gas, burned with air, passes downward through the passages to heat the refractories. When the latter is fully heated, the stoves are switched from the firing mode to one in which air, moving upward through the passages, extracts heat from the refractories. The heated air becomes the hot blast for the furnace. This use of refractories for absorbing and retransmitting heat is termed regenerative heating. It provides thermal efficiency for the furnace and, at the same time, accelerates the reactions within the furnace. On modern furnaces, the temperature of the hot blast may exceed 1093°C (2000°F).

There are two conditions of the blast furnace process which, by themselves, contribute to the control of emissions. One is the need to clean the gas before combustion in the stoves. If the gas contains particulates, even in moderate concentrations, the gas passage in the stoves quickly fill and become clogged. The nature of this piece of equipment imposes the need for highly efficient gas cleaning, 12 mg/dscm (0.005 grains per dscf) or better, being usually considered good practice in a modern blast furnace.

The other condition is the need to control the fate of sulfur in the ironmaking process. Sulfur originates in the raw materials of the burden; however, the principal source is in the coke. Sulfur is detrimental, even in very small quantities, to the final steel product. It is, therefore, necessary to remove as much of the sulfur as is feasible.

In combustion processes, sulfur is released in the form of sulfur dioxide, thereby causing air pollution. In the ironmaking process sulfur is combined with slag. Since the slag is generally cooled and crushed for such end uses as road ballast, the slag provides an environmentally acceptable method for disposing of the sulfur. A small portion of the sulfur is released from the cooling slag, causing emissions to the air. These will be described later.

Periodically, usually 6 to 8 times per day, the hearth of the blast furnace becomes full of molten iron and slag. The tap hole (or holes)in the furnace wall is drilled. First, iron flows from the hole and travels to receiving ladles via iron runners. Finally, slag flows to slag ladles, to a cooling pit alongside the furnace, or to a special slag processing machine. After the flows of iron and slag cease, the tap hole is plugged with a special clay and the ironmaking process continues.

Certain aspects of the blast furnace operation are not continuous. One is the periodic tapping just described. The other is the process of filling the furnace with the burden material. Because the furnace is under pressure, an arrangement of pressure locks is provided. These locks, operating in sequence, permit the entry of the raw material and restrict the outward flow of the gas. Typically, the locks are in the form of two inverted cones called bells, one above the other, the top bell being considerably the smaller of the two. Operation consists of placing the material on the top bell, opening it to dump material to the bottom bell, and repeating the action until the bottom

bell is full of material. When this occurs, the top bell is closed, the bottom bell is opened and the material passes into the furnace. Gas flow is impeded by virtue of only one bell being open at a time.

The trend on newer furnaces is toward higher top pressures in the range of 1 to 3 atmospheres above ambient conditions, the purpose being to obtain more production from a furnace of given physical dimensions. Formerly, it was common practice to operate with top pressures in the range of 0.2 to 0.33 atmospheres. As a consequence of this trend, leakage of gas and erosion of the bells has increased, the one effect augmenting the other. To overcome the problem, a variety of new designs have evolved including nitrogen pressurizing, the three bell construction, and tops with one or more bells replaced by valves with soft seats. One new top[2] has no bell at all, the function of gas sealing being achieved by valving and the function of distributing the burden by a special revolving mechanism.

The blast furnace usually operates continuously for 3 to 5 years, after which it is shut down for relining with refractory and for effecting major repairs. All ancillary equipment for the blast furnace must, therefore, be repairable with the furnace in operation, or at a minimum, in an idling or banked condition.

Emissions

The only direct source of water pollution in the blast furnace process itself is the relatively minor one of thermal pollution. In order to contain the hot gases of the furnace, to resist the pressure of the gases, and to support the weight of the burden materials, the furnace has a heavy steel outer shell which is lined with refractory. Water is used to provide additional cooling for the shell, for special copper cooling plates, for the jacket around the hearth and for the tuyeres. The heated water, although otherwise uncontaminated, constitutes a source of thermal pollution.

A blast furnace is usually on or near a substantial source of water. Its size is usually great enough to absorb the heat of the cooling water without the creation of severe environmental problems. In addition, some modern blast furnaces have evaporative cooling which releases the thermal energy by evaporating part of the cooling water. Evaporative cooling, therefore, avoids the discharge of heat to the receiving body of water and avoids thermal pollution.

Emissions Controls

The accepted, proven method of cleaning the particulate from the blast furnace gas is the dry cyclone followed by the wet, high energy scrubber. The scrubber has several advantages which make it particularly adaptable to this service. They are:

1. No fan is required, nor energy required for running the fan. The pressure within the blast furnace is more than great enough to force the gases through the scrubber.
2. There is no danger of exploding the combustible blast furnace gas when using a wet scrubber.
3. Internal components of the wet scrubber are minimal compared to those in other air pollution control devices such as the electrostatic precipitator. Such components as are exposed to the gas scrubbing action may be fabricated of wear resisting materials or lined with such materials. In consequence of the minimized number of components and the choice of materials, the scrubber used in blast furnace gas service is a highly reliable device well suited to an entirely continuous operation.
4. The modern scrubber is designed with provisions for varying the area of the gas passage (throat) in which the scrubbing action takes place. The purpose is to adjust the area to the variable flow of blast furnace gas from the furnace and to obtain a constant level of differential pressure across the scrubber. This, in turn, insures a constant level of gas cleaning. A well-designed unit has automatic controls for varying the area.

Blast furnace gas has a low calorific value, usually in the range of 2.6 to 3.7 MJ/m^3 (70 to 100 BTU/CF). Large volumes must, therefore, be burned for a given heat duty and large gas mains are required. The economics of burning the low BTU, high volume of gas generally dictate its consumption in or

near the blast furnace complex. Typically the gas is used in stoves for heating the compressed air for the blast furnace (blast or the wind) and in boilers for producing the large quantities of steam which are needed in iron and steelmaking. Less common uses include: the coke ovens (all or part of the heating fuel): the larger furnaces for heating steel; the soaking pits for heating ingots.

From an environmental standpoint, blast furnace gas is an ideal fuel. As indicated above, it is quite clean. It also has almost no sulfur. When burned by itself, or in the proper combination with other fuels, the gas without special treatment, may meet environmental regulations in respect to particulates and sulfur dioxide.

Water Pollution

Contaminated water comes from three main sources: the venturi scrubbers, the gas coolers, and from miscellaneous sources like gas main seals, gas main downlegs, stove seals, etc. Water from the blast furnace gas scrubber is highly contaminated with suspended solids, dissolved solids, alkalinity, and thermal energy. Suspended solids are conventionally removed in a clarifier, the underflow sludge being thickened and otherwise dewatered so that it may be recycled to the sinter plant or disposed onto a landfill. Thermal energy is dissipated in a cooling tower. Recycling of the water helps deal with the problem of dissolved solids, especially those such as phenol, cyanide and heavy metals which are toxic. A small blowdown is required to avoid scaling and plugging of pipes and nozzles. If the concentration of toxic solids becomes high, special treatment of the blowdown water may be required in order to reduce toxicity to levels that are acceptable for discharge to the receiving body of water.

Recycling of the water from the blast furnace gas scrubbers causes the water to increase in alkalinity. Additions of acid serve two functions. One is to achieve neutral conditions in the water. The other is to reduce the quantity of cyanide in the water since it has been found that water which is high in alkalinity tends to be high in cyanide.

Most of the environmental problems from the blast furnace are emissions to the air. The major water problem is treating and disposing of the scrubber water as described above. Solid wastes are normally not an environmental problem, the slag being used for such byproducts as aggregates and road ballasts, and the dust and sludges from the gas cleaning being usually recycled to the sinter plant.

The emissions to the air result from a variety of causes, as follows:

1. Cast house emissions. These are particulates of iron oxide and graphite, called kish, the graphite being emitted from the molten iron as it leaves the blast furnace and cools upon exposure to the ambient air. Also emitted from the cast house, but in lesser quantities than kish, are the gaseous emissions of sulfur dioxide.

2. Emissions from slag cooling. The cooling of blast furnace slag with water creates emissions of sulfur dioxide and hydrogen sulfide. Various methods to reduce the amount of these emissions, espcially the hydrogen sulfide which has a noxious odor even in minute quantities is to add oxidants to the cooling water, to reduce the rate of cooling and to use a special technique which produces lightweight granulated slag.[3]

3. Furnace slips. These result from irregularities of the movement of the burden downward in the shaft of the blast furnace. A part of the burden may hang up for a while, creating a pocket below it. When the release takes place, it is sudden and causes a sharp rise in gas pressure. Relief ports at the top of the furnace open to protect structural integrity. A large volume of gas then discharges to the atmosphere. This gas is high in particulate matter and in carbon monoxide.

4. Gas bleeding. In the process of filling the blast furnace with the burden, there is necessity of bleeding the pressure from the space between the large and small bells. This action takes place after each opening and closing of the large bell. In some furnaces, this gas bleeds to the atmosphere causing a discharge of particulates and carbon monoxide. In other furnaces, the gas bleeds to the entry end of the blast furnace gas scrubber, thereby avoiding the emissions to the atmosphere.

5. Gas leakage. There are numerous sources of gas leaks in the blast furnace complex. One is at the bells which seat metal-to-metal and form a less than perfect seal against gas leakage. Similar leakage although generally smaller in amount, pertains at the numerous, large goggle valves which direct the flow of blast furnace gas to the stoves, the boilers, etc. It is also possible to find gas leaks in the gas mains, the expansion joints, and the shells of the stoves and blast furnaces. All such leaks result in the dishcarge of gas which is high in carbon monoxide.

6. Gas flaring. On occasion there is an imbalance between the production of blast furnace gas from the blast furnace and its consumption in the various combustion units which requires the release of blast furnace gas to the atmosphere. The gas which is so released is clean gas; however, it is high in carbon monoxide. Good practice requires that the gas be discharged from a stack and that it be ignited.

7. Material handling. Many of the raw materials which comprise the burden of the blast furnace are dusty. The dirtiest are usually sinter, coke, and certain ores. Handling such materials causes fugitive emissions which may be high in quantity and relatively uncontrolled. Some sources of such emissions are the discharge from the railroad car to the storage bins at the blast furnace trestle, the discharge from the bins to the scale car or conveyor belt, the filling of the blast furnace skip car and the discharging of the skip into the furnace bells. Scrubbers or baghouses may be used to control emissions from some or all of these sources. Water sprays, although less effective, may be of environmental value.

3.0 CONTROL TECHNIQUES AND EQUIPMENT

Three areas in the blast furnace process require environmental control equipment: the cleaning of blast furnace gas, the collection or suppression of emissions from the handling of raw materials, and the collection of cast house emissions. In general, all of these emissions are reduced in severity by good operating and maintenance practice. For example, a well operated furnace using a screened, beneficiated burden produces less dust in the gas. Likewise, the improved burden results in minimized emissions to the atmosphere from the raw material handling system. Finally, a smoothly operating furnace, casting iron within appropriate metallurgical specificiations produces the least amount of emissions during the casting process. There is usually no environmental control equipment provided for the capture of emissions from slag processing and handling, although some reduction in emissions may be obtained by modifications of process techniques.

3.1 TYPE OF CONTROL EQUIPMENT USED

3.1.1 Blast Furnace Gas

The amount of dust generated and discharged with the blast furnace gas depends upon the operation of the furnace and the amount of preparation which had been afforded to the burden. The amount of dust leaving the furnace can range from 14 to 150 g/Mg of molten metal.[4] Dust concentration may be as high as 30 g/scm of gas.

Most furnaces are equipped with a multistage dust collection system consisting of a dry cyclone and a wet collection device. The dry cyclone in this service is commonly called a dust catcher. The wet device is usually a scrubber either single or dual stage. In some older gas cleaning systems a wet electrostatic precipitator has provided final cleaning; however, these high maintenance devices are absent in the later systems. Newer scrubbing systems, especially the dual stage units operating at high pressure differentials are capable of cleaning gas to concentrations of 5 to 10 mg/scm.

The blast furnace gas has a heating value of 2.9 to 3.5 MJ/scm (700 to 850 kcal/scm) of gas. The gas composition will contain 23 to 40 percent of carbon monoxide and 2 to 6 percent of hydrogen. It is a highly desirable fuel which, although low in calorific value, is also extremely low in sulfur content. Most iron and steelmaking plants attempt to make full use of this byproduct fuel in their operation. Whenever conditions arise in which gas production exceeds consumption, then the clean gas is flared.

The preferred method of cleaning the gas is the venturi scrubber. In it gases are accelerated in the convergient section of the venturi throat in order to impact at high velocity with the injected scrubber water. The wetted particles of dust are agglomerated to form droplets in the venturi diffuser due to decreasing velocity and surface tension. The water droplets containing the pollutants are then separated from the gas in the subsequent gas separator. Most modern venturi scrubbers are designed with an adjustable throat section to compensate for varied rates of gas flow from the blast furnace. Wear in the throat of the venturi is minimized by the provision of a hardened lining and also by a protecting film of water on the convergent inner wall.

At least two of the major consumers of blast furnace gas require that the gas be as free of particulate matter as is possible. These consumers are the blast furnace stoves and the underfiring jets of the coke ovens. Any excess particulate matter that might remain in the gas would tend to deposit in the combustion spaces of these units causing premature outages and failures. Since these units are necessary to the operation of the ironmaking process and since they require a high investment of capital, even if there were no requirements for reducing emissions to the atmosphere, the steel maker finds it necessary to maintain and to operate the gas cleaning equipment at maximum efficiency.

The cleaning of blast furnace gas is thus an essential part of the ironmaking practice over and above its environmental aspects. For this reason, and because there has been so much attention to the improvement and design and construction of equipment for the scrubbing of blast furnace gas, there is comparatively little potential for AOC resulting from malfunctions of this equipment.

Other wet collection devices include the orifice scrubber, both fixed and variable, the fixed venturi scrubber and the electrostatic precipitator. Both forms of fixed scrubber have the disadvantage that the differential pressure drop across the restriction changes in response to the variation in the flow of gas from the blast furnace. As the differential pressure varies so also does the efficiency of cleaning particulates from the gas. The electrostatic precipitator suffers in respect to the venturi scrubber by virtue of its increased maintenance, susceptibility to electrical failure, susceptibility to erosion, etc.

The dry cyclone, or dust catcher, which preceeds the wet collection device is usually a low energy, low efficiency dust collector. Because the raw blast furnace gas contains highly abrasive particulate matter the dust catcher is provided with an abrasion-resistant lining of brick.

Upon leaving the secondary, wet collection device, the blast furnace gas enters a gas cooler where it is cooled by direct contact with water. Usually this water is reused, either wholly or in part, by collecting it and pumping it to the scrubbing device. An efficient gas cooler will provide an outlet temperature within 10°F of the inlet water temperature. Efficiency of cooling is especially important in the case of the blast furnace gas because of its low calorific value. If the gas temperature remains high, there is an increase in content of evaporated water which lowers the heating value of the gas and makes it very difficult to burn.

The gas cleaning system also includes goggle valves for isolating the various portions of the system as well as barometric legs and water seals, at all discharge points.

3.1.2 Blast Furnace Scrubber Water

In many early systems of cleaning blast furnace gas by use of wet scrubbing, the contaminated scrubber water was discharged directly to the waterway. Subsequent environmental measures required the provision of a clarifier followed by discharge of the cleaned effluent directly to the receiving body. This effluent was normally combined with the effluent from the gas coolers and from other miscellaneous discharges. At Inland Steel

Company, it is reported[5] that the total load of particulate matter thus discharged amounted to 14,782 lbs/day as given in Table 1. Environmental regulations required that company to change the once-through water system to a recirculating water system. This system consists of two loops as shown in Figure 4. One loop is for the gas cooler water and the other loop is for the venturi water, seals, disintegrators, and miscellaneous sump water. Each system has independent pumping, piping, cooling, and treatment facilities. The systems are linked to one another by the blowdown of one loop supplying the makeup water for the other loop. As a result of this improved system, the discharge of particulates was reduced to 575 lbs/day as seen in Table 1. There are two thickeners, or clarifiers in the venturi scrubber loop. In case one of the thickeners is down because of malfunction or need for repairs, the second thickener may handle the entire flow of water at some reduced level of cleaning efficiency. Figure 5 and Table 2, obtained from the EPA Document which forms the basis for BPCTCA Effluent Limitations Guidelines, indicate the level of discharge obtainable by this type of system.[24]

A system for recirculating the scrubber water from blast furnaces has certain inherent problems that must be overcome. The suspended solids in the water are principally iron oxide and are highly abrasive. Abrasiveness is compounded by the fact that a fairly sizeable porportion of the particulate matter is rather coarse. In consequence, special precautions are required to prevent deposition in the sumps accompanied by plugging of pump inlets. The pump application itself is an extremely difficult one and it is not uncommon for the life of a pump impeller to be rather short. Because of the heavy nature of the particulates and because of the presence of coarse material, it is not uncommon for the rakes of the clarifier to stall, thereby taking the clarifier out of service.

Another problem in blast furnace scrubber service is the high alkalinity of the water. This results from the carryover of particles of lime in the blast furnace gas and their subsequent solution in the water. Recycling this water to achieve effluent guidelines and to minimize the amount of blowdown leads to a buildup of dissolved solids and, unless special care is taken, to the plugging of pipelines and spray nozzles. Such plugging becomes particularly

TABLE 1. EFFLUENT MATERIAL GENERATED IN A "ONCE-THROUGH" SYSTEM

Gas Coolers	Water Flow	
No. 1 Furnace	711 lbs/day	
No. 2 Furnace	459 lbs/day	
No. 3 Furnace	577 lbs/day	
No. 5 Furnace	295 lbs/day	
No. 6 Furnace	322 lbs/day	
TOTAL GAS COOLER WATER FLOW		2,364 lbs/day
Venturi Scrubbers - Passing Through		
Dorr Thickener		
12,050 GPM @ 65 mg/liter of suspended solids		9,618 lbs/day
Miscellaneous Flows Going Directly to Discharge		
Miscellaneous Sumps		
Miscellaneous Gas Main Seals		
Miscellaneous Gas Downlegs		
Cast House Drains		2,800 lbs/day
TOTAL WATER DISCHARGE		14,782 lbs/day

TOTAL SUSPENDED SOLIDS

A. EFFICIENCY OF A "ONCE-THROUGH" SYSTEM

611,796 lbs/day generated
14,782 lbs/day to discharge
97.56% Efficient

B. EFFICIENCY OF A RECYCLE SYSTEM

611,796 lbs/day generated
575 lbs/day to discharge
99.91% Efficient

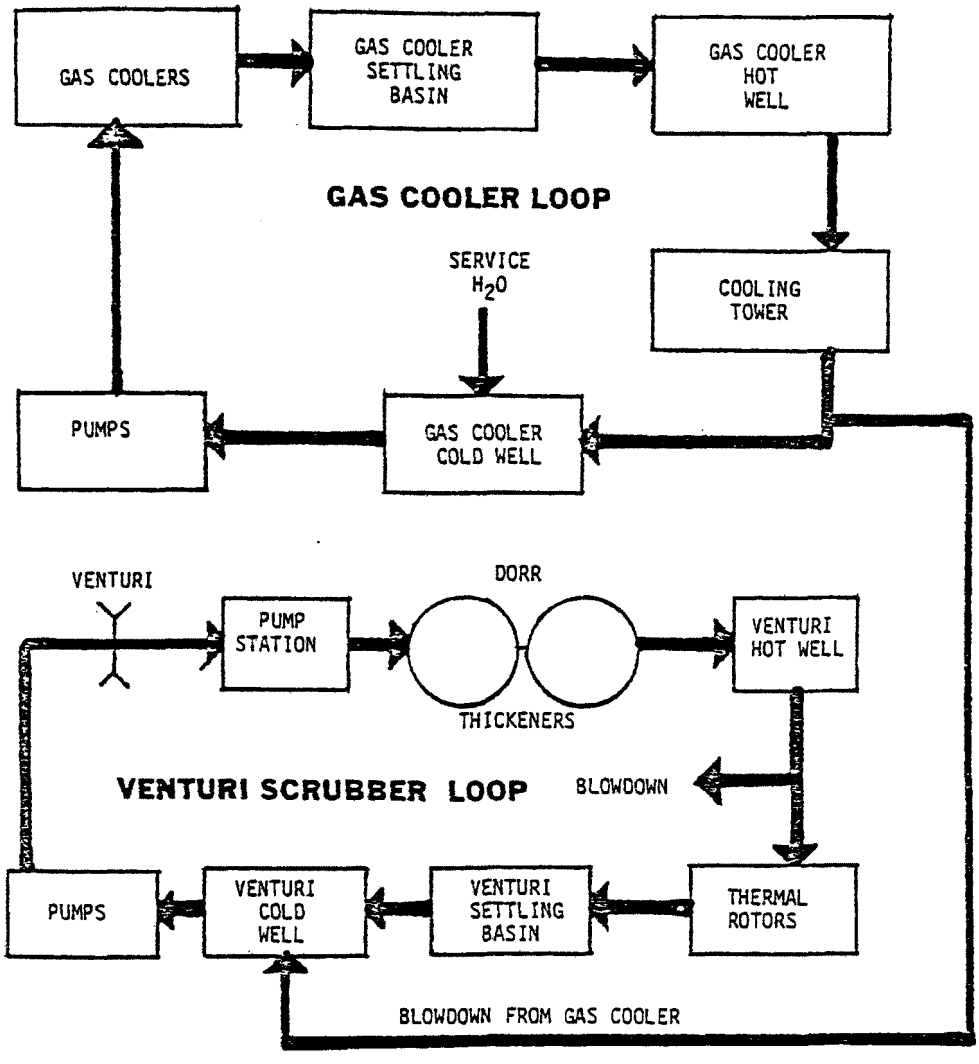

Figure 4. Inland Steel recirculating water system.

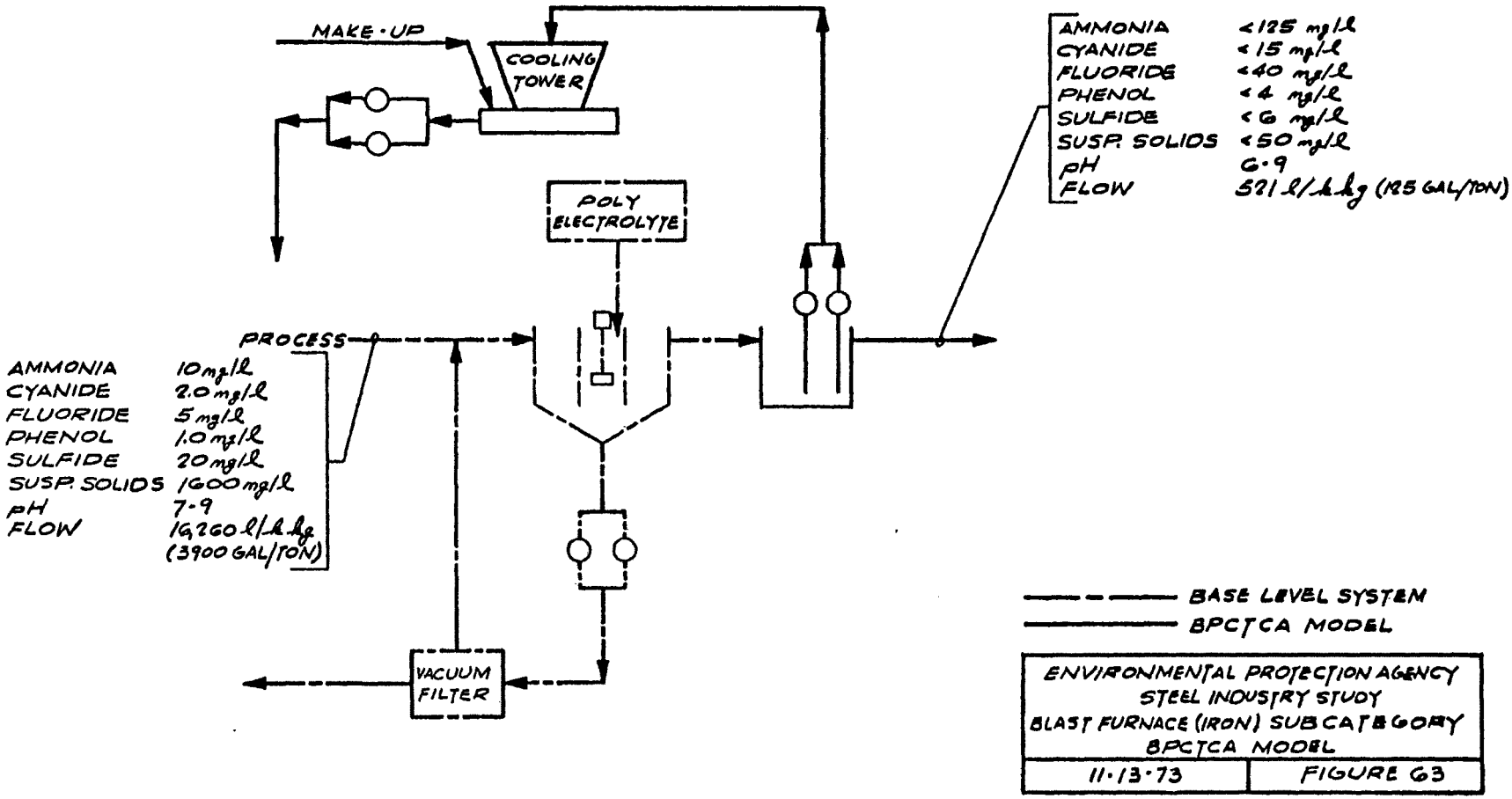

Figure 5. U.S. Environmental Protection Agency BPCTCA Model.

TABLE 2. BPCTCA - EFFLUENT LIMITATIONS GUIDELINES. SUBCATEGORY BLAST FURNACE (IRON)

Critical Parameters	BPCTCA LIMITATIONS Kg/KKg[1] (lb/1000 lb)	mg/l[2]	Control & Treatment Technology[3]	ESTIMATED[4] TOTAL COST $/KKg	$/Ton
Suspended Solids	0.0260	50	Thickening with polymer addition		
*Cyanide$_T$	0.0078	15	Vacuum filtration of thickener sludge		
Phenol	0.0021	4	Recycle loop utilizing cooling tower	0.271	0.246
Ammonia (as NH_3)	0.0651	125			
pH	6.0 - 9.0				
Flow:	Most probable value for tight system is 522 liters effluent per kkg of iron produced (125 gal/ton) (excluding all non contact cooling water)				

(1) Kilograms per metric ton of iron produced or pounds per 1,000 pounds of iron produced.
(2) Milligrams per liter based on 522 liters effluent per kkg of iron produced (125 gal/ton).
(3) Available technology listed is not necessarily all inclusive nor does it reflect all possible combinations or permutations of treatment methods.
(4) Costs may vary some depending on such factors as location, availability of land and chemicals, flow to be treated, treatment technology selected where competing alternatives exist, and extent of preliminary modifications required to accept the indicated control and treatment devices. Estimated total costs shown are only incremental costs required above those facilities which are normally existing within a plant.

*Total cyanide

severe in that portion of the system which follows the cooling tower. The water, having been reduced in temperature, becomes more susceptible to the precipitation of scaling compounds.

Finally there are the physical problems that result from retrofit of a recycle water system to an existing scrubber system for which no provision had been envisioned for installing the additional equipment. Some blast furnace complexes, particularly the older ones, were installed in a congested physical surrounding that did not leave room for the modern technology, including the recycle system. In such plants, pump houses are often cramped, leading to difficulty in maintaining and repairing a piece of equipment which is highly susceptible to outage. Other problems arise due to the necessity of modifying piping systems without excessive shutdown to the ironmaking process, and so forth.

3.1.3 Material Handling Emissions

The raw materials which make up the burden of the blast furnace comprise iron-bearing materials such as iron ore, pellets and sinter, coke, and flux materials such as limestone and silica. In a modern blast furnace, extensive attention is paid to the sizing and screening of these materials, both at the source of the materials and in the stockhouse of the blast furnace. The latter requres the operation of material screens, accompanied by the generation of dusts. If the initial burden preparation has been properly done, the amount of dust is not severe and adequate environmental conditions can often be provided by the judicial application of water sprays.

In some of the older blast furnace installations, preparation of the burden is less extensive. The handling of material in the stockhouse becomes a very dusty operation, especially for coke and sinter. The dusting condition carries over into the operation of filling the blast furnace skip and of dumping the skip into the bell at the top of the blast furnace. Dusting also continues within the furnace itself leading to a high level of particulate concentration in the raw blast furnace gas. As in the case of the more modern furnaces having highly beneficiated burdens, usually water sprays will suffice to provide an acceptable environment in the cast house. The application of such sprays to the dumping of the skips into the bell is not a current practice in the United States, thereby leaving this source uncontrolled.

3.1.4 Cast House Emissions

The emissions from the casting of molten iron and slag occur primarily at the tap hole of the blast furnace and in the pool immediately adjacent to it. There are also emissions which evolve from the iron and slag runners following the pool, however, these are considerably reduced in extent.

The mechanism for these emissions results primarily from consideration of the solubility of carbon in molten iron. As the iron leaves the blast furnace, it is saturated with carbon and as it cools, the solubility of carbon decreases and flakes of graphite are emitted from the surface of the molten metal. This graphite, called kish, as well as other metallic oxide emissions escape to the atmosphere. In an uncontrolled situation, they rise to the roof of the cast house and discharge from there through open spaces to the atmosphere. In most ironmaking facilities in the United States, there is no provision for capturing and filtering these emissions from the air. Where such control is absent, there is obviously no associated abnormal operation. There are, however, abnormal operations concerned with the ironmaking process which cause an increase in the rate of uncontrolled emissions. These will be discussed in greater detail in Section 4.0 of this manual.

In October of 1974 tests were conducted at the Sparrows Point Plant of the Bethlehem Steel Company which yielded an emissions rate of 0.15 gm/kg (0.31 pounds of particulate per ton) of iron. This compares to the results of an evaluation of the cast house evacuation system at DOFASCO Blast Furnace No. 1 during the period of August 30, 1976 to November 19, 1976 in which the emission factors ranged from 0.16 to 0.364 gm/kg (0.327 to 0.727 pounds per ton) of molten iron over 14 samples. The average emission factor was 0.26 gm/kg (0.52 pounds per ton) of molten iron. The range of values given above attest to the variation in the quantity of emissions from this source. Variability is also confirmed by numerous visual observations.

The most common method of controlling emissions from the cast house is to totally enclose the house and evacuate it to a fabric filter. In Japan, where control of casting emissions is more widely practiced than in the United States, there are three different control options practiced, often in combination. These control options involve the method of capturing the fume. Figure

6, which derives from schematics provided by the Nippon Steel Corporation shows these methods. The features of this control are:

1. A curtain type comprising three wall curtains which are lowered over the tap hole area when the fume volume reaches its maximum. At this time suction is commenced.
2. A fixed hood type which is erected over the tap holes and sinter notches for additional collection.
3. An accumulated type in which fumes are temporarily accumulated in the roof of the cast house and slowly vented to the baghouse.

Because of the large air volumes, the concentration of particulates in the air is low as is the temperature of the air. Both of these factors lead to long life of bags and minimum maintenance in a well designed baghouse. At this time, it is not known what sort of maintenance difficulties arise in respect to the hooding, especially that immediately adjacent to the tap holes.

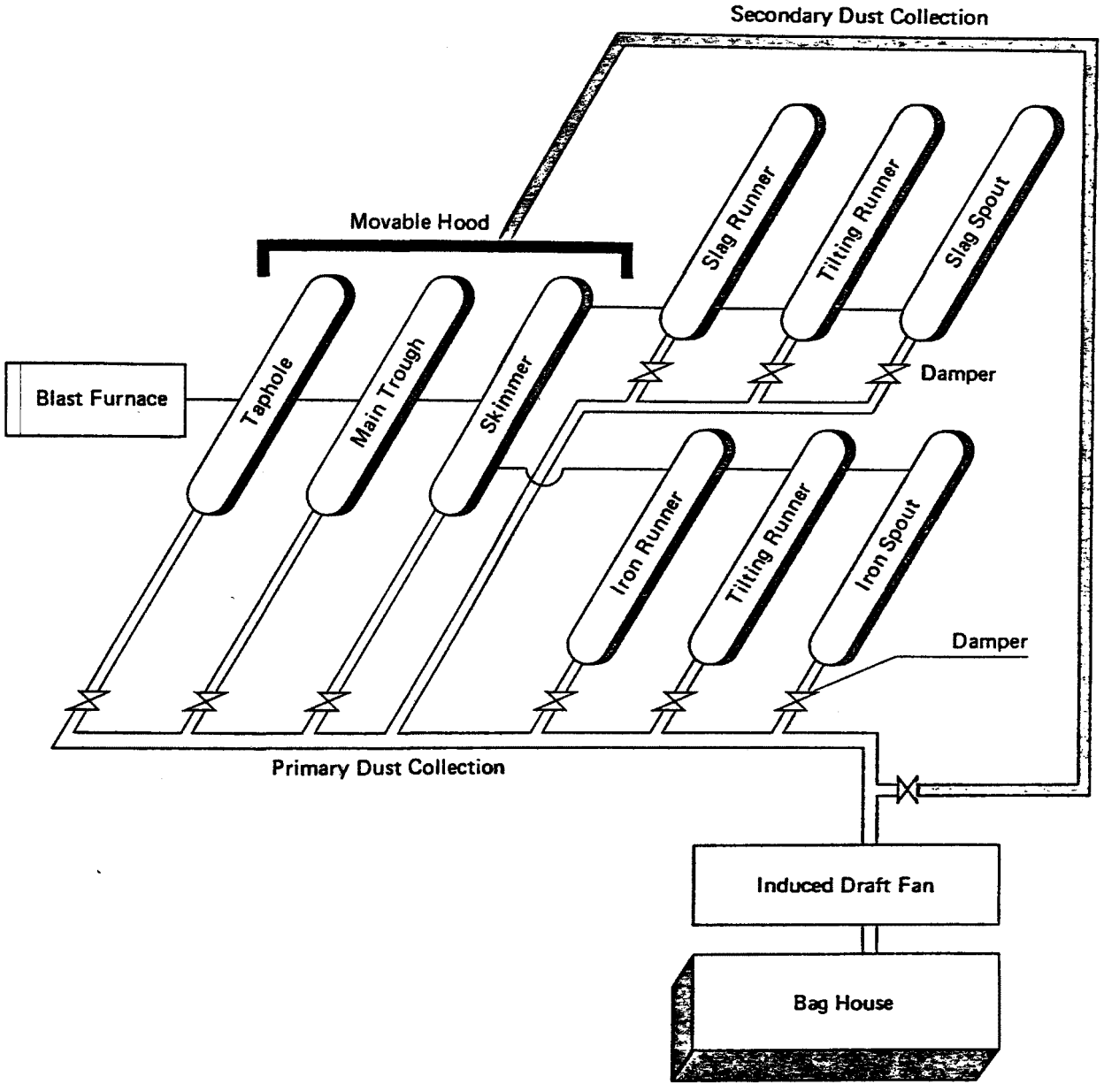

Figure 6. Cast house dust collection system.

4.0 ABNORMAL OPERATING CONDITIONS

This section discusses abnormal operating conditions and techniques for eliminating or minimizing discharges thereunder. Abnormal operating conditions (AOC) can occur in the blast furnace, in its control equipment, during startup and shut down. AOC's are addressed relative to resulting increases in pollution. From this perspective, their causes may be inherent difficiencies in the design of equipment relative to standards set for pollutant control, changes in operating practices and feed material, limitations in the applied technology, equipment or power failure. In assessing AOC's, therefore, attention is given to the role of and need for preventive maintenance, redundant capacity, sensing impending upsets, redesign of control equipment, and alternative strategies for response to AOC's at the plant.

In the following sections, the discussion of AOC as related to the blast furnace is divided into a section related to the process and a section related to control equipment. The importance of each individual AOC in terms of its effect on the environment is not necessarily indicated by the length of discussion. A simple description of problems that produce serious effects are possible while less severe problems may require more elaborate explanations.

In the process area of the blast furnace, a well designed furnace that is equipped with modern techniques and operated according to well established practices both as to maintenance and operation tends to reduce susceptibility to AOC. Those factors which tend to produce high quality iron at low operating cost also tend to reduce the frequency and severity of the AOC. In the control area, the chief source of AOC is in the recirculated water system which serves the gas scrubbers.

The description of AOC's given in the following pages, especially those which are process related are not applicable to all blast furnaces. Procedures and conditions which occur in one plant would not necessarily occur in another. Unusual events in operating one blast furnace may not occur in another. Many accepted conditions of furnace practice, as viewed from the standpoint of

recent and future environmental regulations, may become questionable and require future consideration.

4.1 PROCESS RELATED AOC

4.1.1 Startup

The startup, or lighting of a blast furnace takes place after the blast furnace has been relined or after it has been banked for a prolonged shutdown such as one caused by a strike. Two methods are used to heat the hearth initially; blowing air into the tuyeres and out the tap holes and blowing air in through a tap hole by connecting it to an adjacent tuyere pipe. In either case, the air has been preheated in the stoves and lights up the furnace by igniting the coke. To prepare for the startup, the furnace has been previously filled with a special burden which is high in coke. Right after the furnace lighting begins, the brickwork starts opening up at the bosh. Until the gas has ignited or until the openings are closed with blanks, a hazardous gas condition can possibly exist in the cast house.*

The blow-in burden is one that will produce a very limey slag to protect the bosh brick. Blast furnace slag is also charged so that the initial slag volume is very high. The ore to coke ratio is slowly increased and the blast furnace slag decreased until the furnace is eventually put on its full burden. The rate of increasing the burden ratio and the wind rate is done according to a predetermined schedule; however, this may be adjusted according to conditions. With a normal blow-in, the full burden and rate should be reached after about 70 hours.

During the lighting of the furnace, the large bell may be kept open as are the dirty-gas bleeders.** With the blowing-in practice, the instant the wind is blown into the furnace and the coke is ignited, part of the gas will emerge from the open tap hole. Ignition of the escaping gas which is forced out in increasing velocity as the wind volume increases is extremely important.

---

*The gas can be lit immediately, however.[13]

**The large bell need not be held open in all systems.[13]

The blast furnace gas, which contains a high percentage of carbon monozide is very explosive and highly poisonous to the human system. After a good ignition has taken place, a large quantity of the gas issues from the furnace top. This gas is also high in carbon monoxide and, because of the water gas reaction in the furnace, with hydrogen as well.

Gas tests are taken perioidically from the furnace top. After obtaining a satisfactory sample, i.e., one void of oxygen, the bleeders are closed, the goggle valve is opened, and the furnace is connected to the gas system of the plant. The period of bleeding gas may last approximately 27 hours during which the injection of heated air and the consequent flow of gas has been gradually increasing.

In an alternative blow-in practice the initial air may be injected solely through the tap hole pipe assembly. After about 14 hours, the two tuyeres over the tap hole are opened and the remaining tuyeres are opened at varying intervals. Practice varies from one plant to another, however, at the blowing-in of one furnace[6] the average wind rate during the bleed period was approximately 13 percent of normal wind.

When blowing-in from a bank, upon completion of the first cast, a casting schedule is established. For the next four to five days, the furnace operating conditions are watched to spot any variations from the schedule. Some problems that may arise during this period are:

1. Sustained high silicon content.
2. Drop in slag temperature.
3. Sudden change in slag composition.

When blowing-in a new furnace after a reline, additional problems may occur. Examples of these are:

1. Mechanical problems.
2. Electrical problems.
3. Charging difficulties.
4. Improper burden control.

Any one of the above mentioned problems may delay and prolong the startup time. In view of the condition that emissions during startup are greater than normal, such delays increase the environmental impact.

Reline and the startup accompanying them are infrequent and occur at intervals of approximately four to five years. The blow-in from a bank, since it depends upon such external uncontrolled factors such as business conditions and strikes, may occur at longer or shorter intervals of time. The startup of a brand new furnace obviously occurs only once and may be a particularly difficult period through which to go.

During the startup of one new large furnace in 1974[7], many minor problems were encountered and corrected. These included stockhouse logic and computer inadequacies, hydraulic system failures of various types involving the top, mud guns, drill machines, and tilting spouts. In addition, tap hole problems were encountered early and continued until a suitable anhydrous tap hole mix became available. Some of the delays are shown in Table 3.

TABLE 3. GARY WORKS, #13 BLAST FURNACE MAJOR DELAYS

April 3 and 4	32 hours - Coke mess and iron spill
April 4	6 hours - Hydraulic failure
April 5 and 6	14 hours - Mud gun failure
April 18	16 hours - Coke mess
May 20	6 hours - Coke mess
May 27	5 hours - Iron spill
June 2	15 hours - No. 3 hole opened up
June 8 and 9	37 hours - No. 1 hole opened up, burned up hydraulics and wiring
July 11	11 hours - No. 2 hole opened up
July 13	10 hours - No. 2 mud gun traverse cylinder broke - missed stop
August 9	52 hours - No. 2 taphole spill - expanded into planned stop for maintenance work
August 23, 24, 25, and 26	83 hours - Lost No. 1 taphole

The most persistent problem during the initial operation was with the tap holes. The furnace was equipeed with rotary drill machines and hydraulically operated mud guns. Prior to blow-in, the original tap hole brick work was partially removed and rebricked to change the angle and length. The rotary drills were not powerful enough to drill to the skull, resulting in an excessive amount of oxygen lancing. This and other problems made it difficult to maintain long, strong tap holes. Short holes were a daily occurrence and spills were frequent and sizeable.

One of the considerations during startup is to insure that the iron and slag will flow readily out the tap hole. In order to achieve this, the furnace is kept hotter than usual. Because of the excessively high temperatures, slips are more frequent than they are during a normal operating campaign. In addition, the initial slag should be limey at the start. This type of slag tends to produce increased emissions from the cast house during the casting process.

In summary, increased emissions are usually present during the startup of a blast furnace. These emissions include unburned raw gas, emissions from increased lancing of the skull, increased emissions during the casting process, increased slips, and emissions from various spills that may occur. Careful planning is required to reduce the length of the startup period and in consequence the amount of emissions. The interval between startups is long, generally in the order of four to five years. The interval between banks is also long, but variable in frequency.

4.1.2 Shut Down

There are two conditions under which a blast furnace may be shutdown. One is in anticipation of a prolonged outage such as for a strike. In this case, the furnace is banked so that it may be restarted upon resumption of normal operating conditions. The other is in the case of taking a furnace completely out of service such as for a major reline. In this case, the burden is quenched.

A typical procedure in banking a blast furnace is to charge it with a suitably fluxed coke blank approximately 8 hours before the shutdown. This blank may be equal to approximately 40 percent of the working volume of the

furnace and the remainder of the furnace is filled with a burden in which the ore to coke ratio is 50 percent of normal. The coke blank at the tuyeres provides the initial heat requirement when the furnace is blown back in. An estimate of the number of rounds required to be charged until the coke blank reaches the tuyere zone is made. The furnace is then shut down coincident with the first coke blank reaching the tuyeres. The tap hole should be blown hard and long to drain the furnace of as much iron and slag on the last cast. In addition, the dust catcher should be blown many times to insure that it is empty, since any dust remaining could consolidate into a hard mass that is difficult to remove. Both procedures increase emissions during banking.

After shut down, stringent measures are taken to minimize the ingress of both water and air into the furnace. Water ingress is prevented by testing cooling members for leaks, reducing water to coolers to 25 percent of normal, and turning water off the tuyeres. Air ingress is prevented by removing the blowpipe and plugging the tuyeres, encasing the furnace shell with a sealing compound, and making the last top charge to the furnace of uncleaned iron bearing material to form a top seal. Steam is also used to purge the furnace and the gas system. The last gas still being produced by the furnace is bled out of the relief valve until the wind is taken off.

There are several different methods of blowing out a blast furnace. One method is to blow the furnace down so that most of the stack is empty when the last cast is finished. Other methods leave the furnace full of materials that can be raked out.

Blowing the furnace down has the advantage of reducing the time required for stock removal since the furnace is left partially empty. During blowdown, it is necessary to install water sprays in the gage rod holes to prevent excessive temperatures in the furnace top. There must be an ample volume of water to quench the coke below its kindling temperature. The last cast is scheduled so that it will be finished when the stock is at the predetermined level after which the wind is taken off the furnace, the salamander is tapped and the furnace completely quenched.

The disadvantage of the blowdown method is the danger of an explosion in the space above the burden. The risk is even greater when the furnace is known to have a scab or scaffold which may disrupt the distribution of water and prematurely put out the flame of one or more tuyeres. To reduce the danger of explosion, coke or silica pebbles are used to fill after the last burden leaving an empty space only eight to 10 feet below the normal stock line.

Some operators adopt the procedure of quenching the furnace filled with its regular burden without scrap and other miscellaneous materials. This requires more time to clear the burden after quenching. It is not wasteful because the materials may be recharged after cleanout.

A large furnace can be completely quenched in 24 hours if a sufficient supply of water is available. During this period, the cast house is roped off and no one is permitted around the furnace or on top. The tuyeres are solidly plugged and the blowpipes either blanked with steel plate or taken down before the quench. All furnace bleeders are left open to relieve the steam and the gas that is formed. At some plants, the bells are also blocked open.

During the quench, the furnace top may get very hot. Due to the water gas reaction, large quantities of hydrogen may be produced. A gas fire may start above the furnace in the superstructure. For this reason, it is always advisable to clean as much grease off the furnace top as possible before starting the quench.

The pool of iron in the hearth of the furnace below the tap hole can either be removed as a liquid by bottom tapping or be allowed to solidify and removed when the lining is torn out. If the bosh and hearth are not to be relined, it is left in the furnace. If bottom tapping is employed, a hole is drilled through the bottom refractory from beneath the hearth plates and the iron is drained onto the ground.

As in the case of starting up the blast furnace, the process of shutting it down involves greater than normal emissions. The duration and concentration of emissions during the latter procedure are much less severe than during the former. The frequency of both are essentially the same; that is, a shut down is normally followed by a startup.

4.1.3 Abnormal Operating Conditions

Slips

Slips are due to a bridging of the stock in the furnace. When this occurs, the material underneath continues to move downward creating a void. The void increases in size until the bridge collapses, causing a sudden downward movement in the stock above it. In severe cases, this causes a sudden increase in gas pressure. To relieve this pressure, the raw gas bleeder at the top of the furnace automatically opens discharging a cloud of particulates and blast furnace gas to the atmosphere. The bleeder is shown in Figure 7 which has been reproduced from Reference 8. This Reference also attributes the cause of hanging to the following factors:

1. Resolidification of previously fused slag and molten iron.
2. An excessive quantity of fines in the coke. This is confirmed by common operating experience in the blast furnace and is reported as the result of model experiments.[9]
3. Fine carbon formed via the Boudouard reaction may also fill the spaces in the burden and impede the upward flow of gases.
4. Alkalis such as the oxides of sodium and potassium, may contribute to the hanging as well as to the formation of scabs which adhere to the furnace wall.
5. Overblowing the furnace by excess wind tends to prevent the smooth downward flow of material. One way of overcomming this condition is to increase the top pressure of the furnace.

This same Reference indicates that slip-induced bleeder valve emissions, based on national production figures, appear to be small relative to the emissions of other in-plant air pollution sources. Their estimate of emissions from slips in the United States is 187 to 1842 tons per year. They compare this to the blast furnace cast house emissions which they estimate to be 4790 to 24,370 tons per year.

Bleeder valve openings which result from slips in the blast furnace are more serious on an individual basis than on a national basis. Some furnaces may operate for an entire year without reporting one such opening. Others may

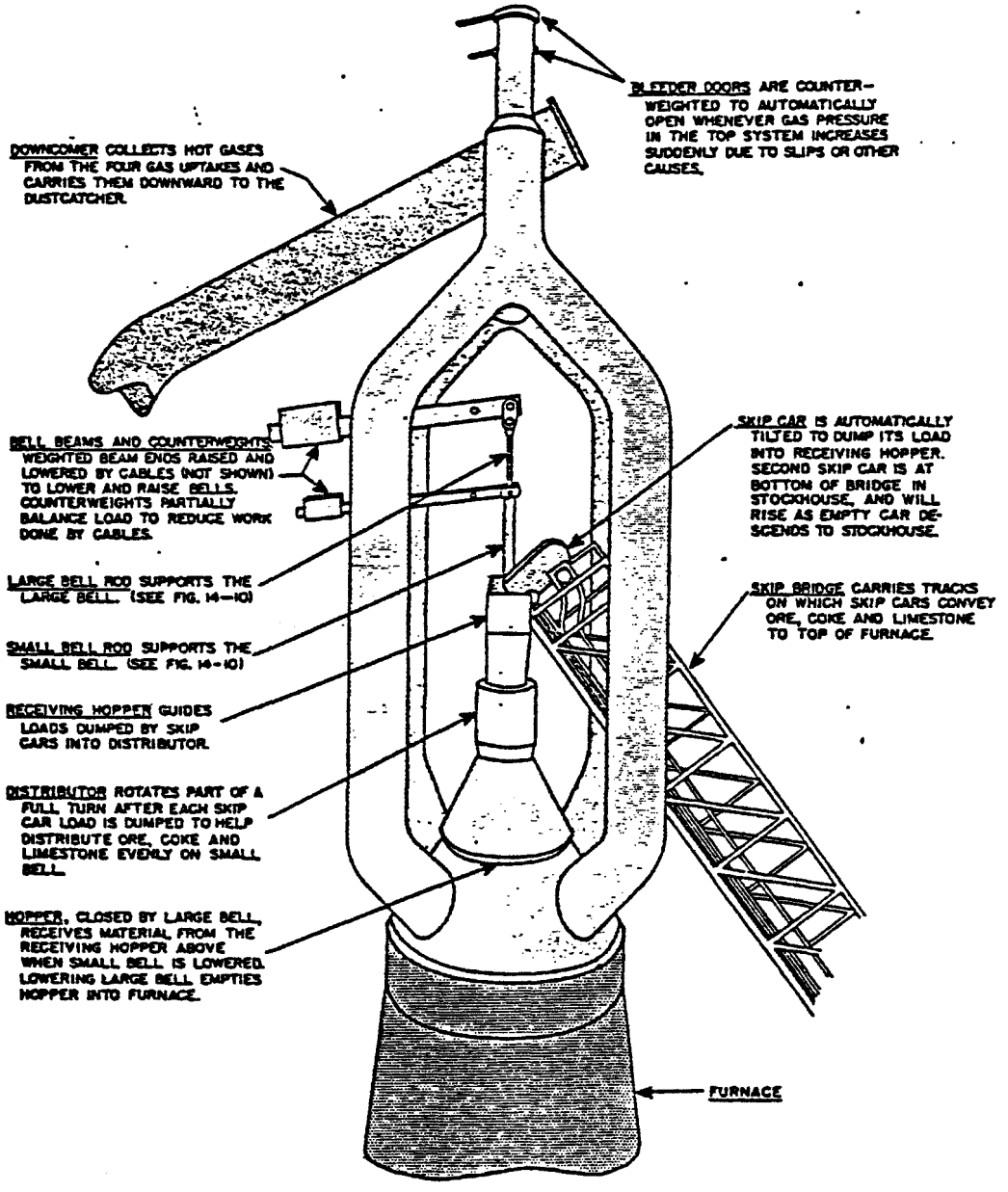

*THE VARIOUS PLATFORMS AND STRUCTURES SUPPORTING THE TOP EQUIPMENT HAVE BEEN OMITTED FROM THIS DRAWING, AS WELL AS THE CABLES AND SHEAVES THAT OPERATE THE SKIP AND THE BELLS. ALSO OMITTED ARE THE JIB BOOM CRANES THAT ASSIST IN HOISTING REPAIR AND REPLACEMENT PARTS TO THE TOP OF THE FURNACE.

Figure 7. Schematic illustration of blast furnace top.

have 50 a month or more. Older blast furnaces generally have more slips than younger ones. It is also possible for a bleeder valve to stick in the open position, thereby increasing the duration of the AOC.

High-alkali burdens are especially important contributors to slipping. In addition they cause other operating problems in the blast furnace:[10]

1. Excessive tuyere losses.
2. Coke messes on the cast house floor.
3. Very high blast pressures.
4. Inwall scabbing. The presence of scabs tends to restrict the area in the stack causing higher gas velocities and contributing further to the incidence of slips.
5. High coke rates. More coke has to be produced by the coke ovens leading to increased emissions from that source.
6. Loss of production for removing scabs. The process of removing the scabs in itself induces the emissions to the atmosphere.

One of the most effective ways to decreasing the alkali content of the burden materials is to determine which materials are the principal sources of the alkali and to eliminate them from the burden. Alkali may be found most usually in iron ores, but they are also present in coke and in flux material. A high slag volume and a lean slag practice (keeping the basicity ratio of the slag at 1.00 or less) is effective in obtaining reasonably good operation with a high-alkali input. Analyses show that lean slags remove significantly more alkali than limey ones. Alkali input not only causes abnormal operating conditions, but also reduces production and increased coke rates as can be seen on Table 4.[10] The operational problems resulting from high alkali will increase with a decrease in coke stability.

The factors that induce good performance in respect to meeting metallurgical specifications for iron are also conducive to reducing AOC from slips and other causes as will be indicated below. In one plant in which the bogey for casts that are off-analysis is a maximum of 6 percent, the following operating factors contribute to a satisfactory performance record:[29]

TABLE 4. EFFECT OF ALKALI ON PRODUCTION AT GENEVA BLAST FURNACES

Item	Unit	Prior to Pellets 100% Utah Ore Burden 35% Sinter 65% C. Ore	1964-1975 50% Pellets 30% Sinter 20% C. Ore	Two Periods in 1975 80% Pellets 10% Sinter 10% C. Ore
Production	NT/day	1349	1920	2100
Coke Rate	lbs/day	1270	1140	1100
Carbon Wind	C.F.M.	62,338	79,750	78,000
Blast Heat	°F	1450	1800-1850	1700-1800
Slag Volume	lbs/NT	926	770	720
Ore Usage	T/NTHM	1.835	1.61	1.50
Alkali Input	lbs/NT	46	17	8
Alkali Input	T/Fce. Day	31	13.4	8.4

1. Control of materials

   a. Coke stability. Around 55 is excellent. Below 48 is poor. The larger furnaces need better coke for good performance. These numbers refer to a standard test of abrasion resistance.

   b. Low alkali content of the burden. High alkali contributes to slips.

   c. A screened burden.

   d. Low ash in the coke.

2. Uniform Operation. Attention to all operating factors that contribute to the uniformity of operating conditions. In one plant reliance is placed on thermocouples, located at the quadrants of the furnace, approximately 6 feet below the big bell. The thermocouples indicate proper movement of the burden and proper distribution of the gas. Adjustments in the burden are based upon the temperature readings.

3. Moisture Control. Moisture is controlled by the addition of steam into the tuyeres. A desired control level is 11 gms/scm (5 grains of moisture per scf) of air. In the summertime, moisture may increase to levels as high as 25 gms/scm (8 grains for which there is usually no correction provided.

4. Maintenance. A high degree of preventive maintenance will tend to keep all systems, instruments, and controls operating as designed. In one plant which is located in a cold climate, the preparations for winter conditions begin in August.

5. External desulfurization of molten iron in a facility away from the blast furnace. This permits the blast furnace to deliver molten iron which is higher in sulfur than required at the steelmaking facility and results in lower consumption of flux as well as a leaner slag thatis better able to deal with removal of alkali. Another benefit is the increased production of iron from a given furnace up to about 15 percent and the reduction in coke, up to about 10 percent. By virtue of the benefits mentioned above, external desulfurization of iron contributes to the reduction of AOC from the ironmaking process as well the reduction in normal emissions from this process and the coke making process.

By carefully monitoring the pressure in the blast furnace, the relief openings due to slips may be minimized. When the pressure first starts to build up, a controlled slip can be made to occur by reducing blast pressure. This procedure called checking helps to break up the bridge which has been

impeding the flow of the burden. By a repeated checking procedure, the gas channels become more evenly distributed and the stock movement may return to normal. If this procedure is not successful, another procedure is to increase the moisture in the blast and to decrease its temperature for a short period of time.

Backdrafting

The necessity of making certain repairs on the blast furnace requires that the pressure in the furnace be relieved by taking the wind off the furnace, backdrafting the bottom of the furnace through the tuyeres and opening the relief bleeder. Backdrafting refers to the condition in which the furnace gases are drawn back through the tuyeres to a hot stove where the gas is burned. As an alternative to the use of a hot stove, some plants deliver the gas to a special backdraft stack.

Emissions of gas and particulate matter from the opening of the relief valve and from the backdrafting occurs primarily during the first 15 minutes of the outage. It is not known how much of these contaminants are emitted; however, visual observation indicate that it is minor in comparison to other sources at the blast furnace. Figure 8 diagrams the procedure that occurs during backdrafting.

Compared to all other blast furnace water-cooled members, tuyere failures are the single biggest cause for furnace delays and for backdrafting associated with their repair. Tuyeres are nozzle-like water-cooled copper castings which project into the hearth of the blast furnace. Their function is to direct the heated blast from the bustle pipe into the furnace. Some reasons advanced for their failure are:

1. Inadequate cooling due to poor water circulation, dirty water, or water stoppage. Newer designs of tuyeres have been developed which provide higher water velocities at the tip of the tuyere which is exposed to severe operating conditions of the blast furnace.
2. Abrasion from the ceaseless swirling of incandescent coke due to the tremendous activity which occurs at the nose of the tuyere.

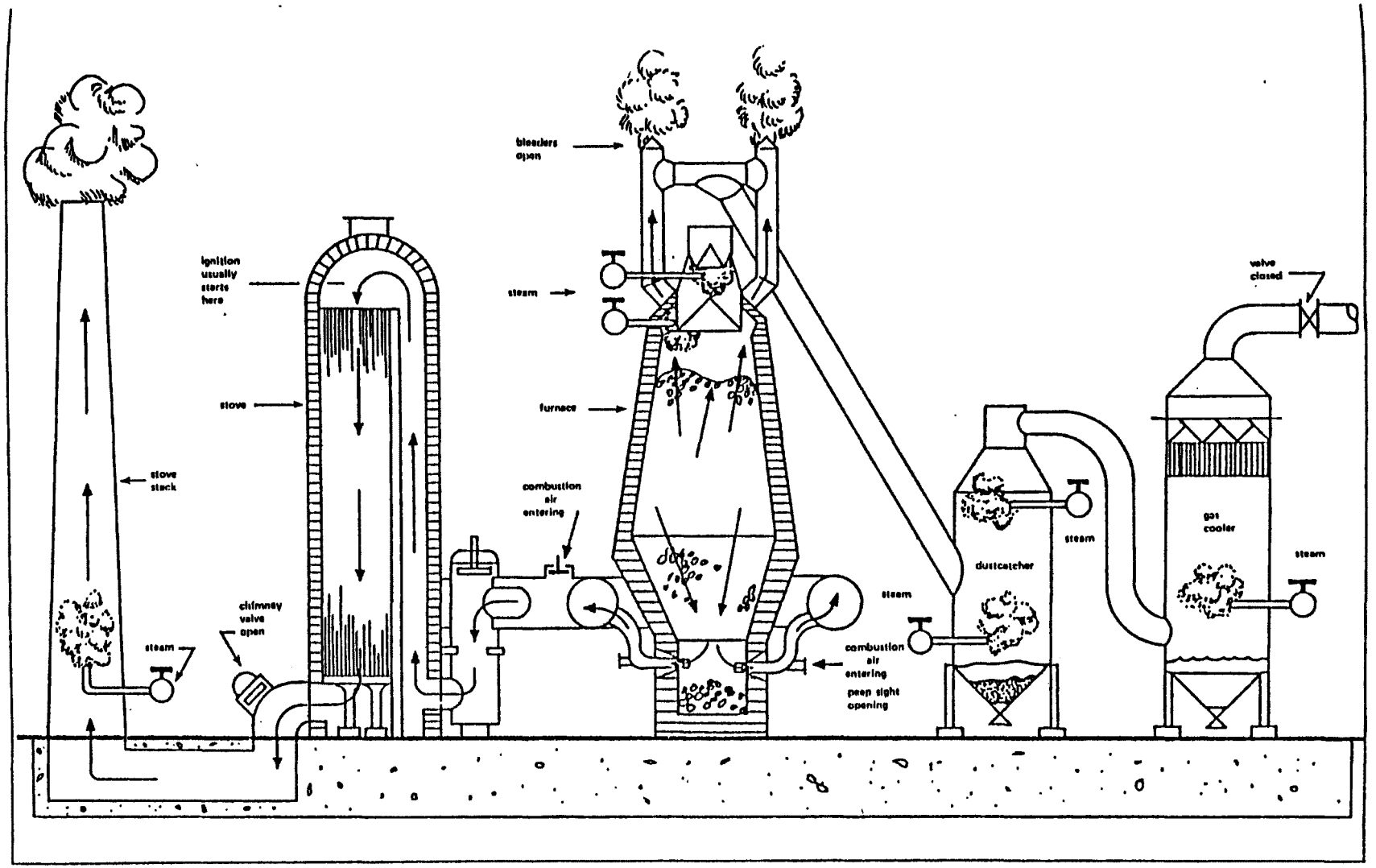

Figure 8. Backdrafting through blast furnace stove.

3. Iron cutting. The impingement of a large amount of molten iron on the surface of the tuyere can cause premature failure. It has been surmised that a sudden drop of the burden into the molten bath during a slip may splash an excessive amount of slag and hot metal onto the tuyere. It is also believed that weak coke pulverizes excessively and forms a mass of fine particles which retard the passage of molten globular iron. The impervious coke collects and forms a pocket at the tuyere nose for the molten iron.

4. High alkali burdens, as indicated in the previous section are associated with excessive loss of tuyeres.

On one new blast furnace[7] the initial design of tuyeres resulted in a large number of failures. There were 197 tuyeres changed during the first 9 months of operation and 200 tuyeres in the next year. Since the furnace has 36 tuyeres, this works out to an average life of about 58 days per tuyere. Continued work on tuyere design and water flow is reported to have favorable results. In comparison, another furnace[11] reports eight tuyeres out of a total 28 lost in the first 209 days of operation. This works out to 730 days average life per tuyere.

Other repairs to the blast furnace that require backdrafting include changing of bleeder valves, changing of furnace large and small bells, etc., occur less frequently than do tuyere changes but require longer downtime. A tuyere may be changed in a comparatively short period of time. To change a bleeder valve may require about 8 hours of which approximately 3 hours is required to rig up for the job. A small bell repair may require about 12 hours, whereas the replacement of a large bell may take 7 days.

At one plant,[28] normal furnace repairs such as welding on uptakes or downcomers require 12 to 16 hours. A repair job on both the large and small bells of the blast furnace has required a total 56 hour downtime. The delays for repairs have ranged from 25 hours per year to 268 hours. Typically, furnace downtime is estimated to be 5 percent per year; however, it may be reduced to as little as 3 to 4 1/2 percent.

When an extended repair is anticipated, in addition to backdrafting, the tuyeres may be sealed to prevent air from entering the furnace. During all such repairs, gas measurements are made to insure safety for the maintenance

crew. After such a repair, when bringing the furnace back on-line, the mains and dust catchers are purged with steam or an inert gas to avoid the potential of explosion.

In summary, the amount of time for backdrafting can be reduced by improved design and maintenance practices as well as by careful attention to water flow to the water-cooled members and by improved burden which minimizes such AOC's as slips, tuyere failures, etc. Emissions from backdrafting occur primarily during the first 15 minutes of the backdraft and, although on some furnaces the amount of backdrafting may be as frequent as 50 to 60 times per month, the effect on the environment is small compared to other sources in the blast furnace.

Water and Power Failures

A massive power failure is perhaps the most potentially disastrous occurrence in the blast furnace. The longer the power is off, the longer it takes to bring the furnace back on-line. If the outage is of short duration and cooling water pumps are restored during the period, very little damage will occur to the furnace. However, if the outage is long and there are not supplementary steam driven cooling water pumps, the residual water in the tuyeres, coolers, bosh plates, and stack plates will boil out and they may become so hot as to melt. In addition, the hearth cooling plates may become damaged. During power failures, blast furnace bleeders may be opened, thereby creating a source of emissions.

If the power outage continues, the gas mains may cool off, the vapors in gases inside may condense, reduce in volume and create a vacuum. If air is sucked into the mains, explosions may result. Burned copper coolers may permit large quantities of water to enter the furnace, chilling it and consuming large quanitites of coke due to the water-gas reaction. Finally, it may be exceedingly difficult to isolate the blast furnace from the gas system because the large goggle valves may be difficult to operate manually.

On February 11, 1967, the Aliquippa Works of Jones & Laughlin Steel Company suffered such a massive power failure. A series of explosions occurred after the power was restored. The low pressure steam, when turned into the cold mains, apparently condensed and drew in air creating an explosive mixture. These explosions wrecked the boiler house gas mains and a furnace gas cooler.

On August 28, 1974 the Gary Works of U.S. Steel Corporation suffered a complete power failure and their No. 11 Blast Furnace lost all wind, water, and electrical power.[7] This resulted in filling all the blow stocks, two of them being burned through with the slag and iron running out. All 35 tuyeres, eight coolers, and four upper expansion joints had to be replaced. This, as well as repairing other damage, resulted in the furnace being down for five days.

As a result of the breakouts and explosions as described above, the emission to the atmosphere from a power failure can be very great. Fortunately, such occurrences are comparatively rare and may be minimized by building certain safety features into the plant as follows:

1. Provide a source of power which is separate from the outside utility company. In addition, provide duplicate facilities such as power lines and breakers for supplying electricity to the consuming units.
2. Provide steam driven auxiliary units such as cooling pumps for the most critical service.
3. Provide an overhead water storage tank to insure an adequate supply of cooling water to the blast furnace under emergency conditions.
4. Provide training for operating and maintenance personnel in respect to dealing with problems which may arise during power failures.

Breakouts

Breakouts occur in the area of the hearth and the bosh immediately above it. They are caused by the failure of the walls which, in turn, results in the uncontrolled flow of liquid slag and/or molten iron out of the furnace. This can cause considerable damage to the furnace and the auxiliaries. It also results in a substantial cloud of emissions to the atmosphere.

When a slag breakout occurs it can usually be chilled with water and the hole plugged by pumping in fireclay grout or by ramming in refractory material. An iron breakout is much more serious because there is more chance of explosions if the molten iron comes in contact with water. Also there is usually no practical way to stop the flow of iron out of the hole until it drains completely. Most breakouts of iron have occurred in furnaces that are lined with carbon.[27] With more experience in the use of carbon, the incidence of these breakouts has decreased.

Another cause of breakouts, especially in high tonnage carbon hearths may occur when restarting a furnace after a comparatively short stop in which the iron salamander is left in the hearth. When this iron solidifies, the salamander shrinks as it cools and draws away from the brick. These shrinkage cracks then become filled with other material and upon reheating, the reexpansion of the salamander creates enough stress on the hearth jacket as to burst it. If the cooling water on the jacket is heated to 140°F just prior to blow-in, the jacket is allowed to expand and the stress is relieved. Heated water is maintained on the jacket for about 14 days after the blow-in after which normal cooling water is restored. Typical of such outages which last at least three days but are not long enough to drain the salamander are for a bell change, a steel plant oxygen failure, a power failure where a furnace cannot be restored for several days, major stove repairs, strike threats, etc.

Figure 9[12] illustrates the amount of iron produced and the years of service

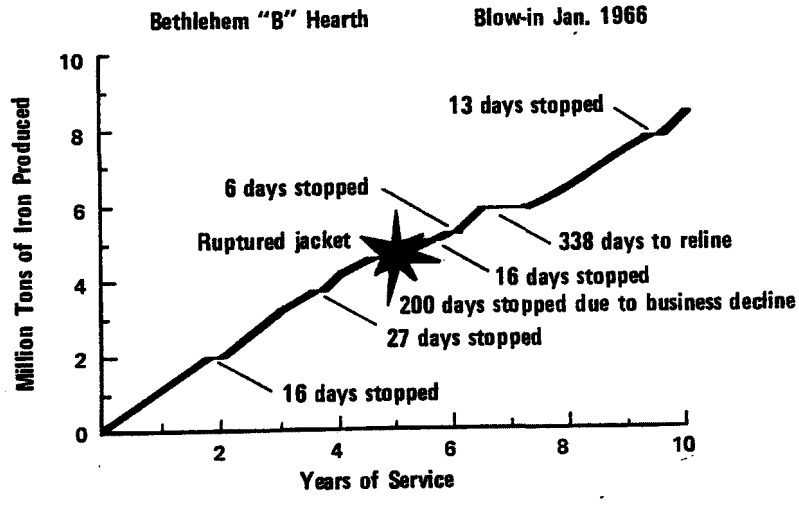

Figure 9. Tons of iron accumulated on hearth during years of service. Starts and stops in production and duration of each are shown as well as point at which hearth jacket ruptured.

An analysis of ten breakouts that occurred in various blast furnace facilities during the period of 1961 to 1967 reveals one breakout in the bosh three feet above the tuyeres.[12] The remaining were breakouts in the hearth. In only one of these incidents was a man injured being burned by metal and slag. Damage to equipment, however, was common to all and in some cases, fairly extensive. One method of guarding against breakouts is to install thermocouples at strategic places in the hearth of the furnace. These thermocouples tend to give early warning of a condition which may lead to breakout thereby enabling the operating personnel to take the necessary corrective action before the breakout occurs.

Charging Dusty Material

The most common method of charging material into the top of the blast furnace is by means of the skip. If the material being charged is weak and friable and if it has not been beneficiated by crushing to size and screening, the filling of the skip and its subsequent dumping at the top of the furnace may give rise to a dust cloud of particulate matter. The dust cloud at filling is a low level source which tends to remain within the blast furnace area. The dumping operation is at a high level and prevailing winds tend to entrap the particulate matter into the atmosphere.

From the standpoint of smooth operating conditions in the blast furnace leading to high tonnages, low costs, and minimum AOC, a sized and screened burden is highly desirable. It is desirable in many cases to screen the burden twice. Typical examples of this are pellets, sinter, and coke. For each of these materials screening may be performed where the material is produced and once again in the stockhouse of the blast furnace being charged. The latter screening serves to remove fine particulate matter with may have developed in the handling of the raw material from the source of production to the furnace itself. Where such screening is performed and if it is done in an efficient manner, the filling and emptying of the skips is relatively dust free.

All blast furnace operators would prefer to have a screened and sized burden which is strong and resistant to abrasion. In spite of this, many furnaces do not have adequate facilities for sizing and screening, either because of limited space or because of economic considerations. If the burden is not screened, the filling and emptying of the skip can be quite dusty, especially in the case of sinter and coke. One way of reducing the amount of such emissions is by the application of water sprays,[23] and preferably in conjunction with a wetting agent.

A furnace may have up to 600 charges per day from the skip. Each filling and dumping operation may last five to ten seconds. Thus the aggregate time for each operation is 3 1/2 to 7 percent of the total operating time. The amount of emissions from each occurrence is variable depending upon the nature of the material, the way it was handled, whether or not water was applied, etc. At the present time there is no information available on the quantity of emissions.

Gas Cleaning System

This section refers to that portion of the gas cleaning system which relates to the process itself, i.e., the dust catcher and the scrubber. The other portion of the system which relates to the recirculation of the water is covered under control equipment related AOC.

The first element in the gas cleaning system is the dust catcher. Because this equipment is lined with abrasive resistant refractory and because it is a low energy device, there is normally little AOC associated with it. The dumping of the dust catcher should be done at frequent intervals, normally once per shift. Because the material is hot, dry, and dusty, steam and water sprays are usually provided for control of emissions. The dust may be discharged directly from the catcher to a railroad car or it may be preconditioned in a pug mill by adding water or blast furnace sludge.

At times the flue dust may become hard and lumpy and it may be necessary to free the dust catcher outlet by means of a small explosive charge. This can create a minor source of AOC.

If the final cleaning device is a fixed orifice scrubber, the differential pressure drop across it becomes a function of the rate of flow of gas from the blast furnace. If the rate of flow is low, the pressure differential becomes low and the efficiency of gas cleaning suffers. Efficiency may also suffer because of wear in the lining of the scrubber which damages its internal configuration. Blockage may also occur in the spray nozzles due to the accumulation and deposits of scale, thereby decreasing the flow of water.

In most blast furnaces, the gas scrubbing equipment operates at high cleaning efficiency because there is adequate pressure available from within the blast furnace. An outlet gas loading of 25 mg/scm (0.011 grains/scf) or better is commonly found; in modern furnaces, the outlet loading may be as low as 5 to 10 mg/scm (0.002 to 0.004 grains/scf). The blast furnace operators find it highly desirable and necessary to maintain high cleaning efficiency in order to protect such costly fuel burning equipment as the blast furnace stoves and the coke oven underfiring systems. If such units were to burn dirty gas, they would soon become blocked and inoperative. Therefore, careful attention is paid to the operation and maintenance of the scrubbing equipment and AOC from this source is comparatively minor.

The trend in gas scrubbing facilities for the blast furnace is toward equipment that insures higher efficiency and greater reliability. Constant pressure differential and, therefore, cleaning efficiency is maintained by the provision of variable orifices and automatic controls. Wear of the scrubber internals is minimized by the provision of abrasion resistant linings and by configurations which establish a water film for additional protection. Scaling of spray nozzles is minimized by attention to the quality of the water and by provision of new designs which use a small number of large diameter inlet nozzles that are less susceptible to the effects of such scaling that does occur than are small nozzles.

In some gas systems, final cleaning is provided by passing the gas through a wet electrostatic precipitator. This type of equipment is subject to malfunction from corrosion of the precipitator internals and from electrical failures. Corrosion may be minimized by proper attention to water quality and electrical failures by attention to maintenance practices. In any event,

because the wet precipitator is almost invariably preceded by the dust catcher and one stage of gas scrubbing, its malfunction causes minimal AOC as far as the environment is concerned.

Gas Bleeders

In most iron and steelmaking facilities, every effort is made to consume all of the byproduct gas produced. This is true of blast furnace gas as well as coke oven gas. There are several conditions under which blast furnace gas is bled to the atmosphere, as follows:

1. During startup and shut down.
2. From furnace slips.
3. From backdrafts.
4. From bell leakage.
5. From the clean gas bleeders.

The first three items on the list have been covered previously in this manual. The next item, that of bell leakage, will be covered in Section 5.0 at the end of this manual.

Whenever blast furnace gas is produced in an amount that exceeds its useful consumption in various heating processes, it must be bled to the atmosphere. Normally, the bleeder for blast furnace gas is equipped with an ignition torch to assure that the gas burns upon entering the atmosphere. The most common ignition torches burn natural gas or coke oven gas. On occasion, the ignition flame is extinguished, primarily because of deposits in the coke oven gas which may in time cause a plugged condition. When this occurs and there is a sudden opening of the clean gas bleed, the blast furnace gas enters the atmosphere without being burned. In consequence of the fact that the gas contains 20 to 30 percent carbon monoxide and of the fact that the amount of gas bled may be high in quantity, the amount of this contaminant in the atmosphere becomes substantial. Under certain climatic conditions in which there are downdrafts from the stack, it is possible that the area around the base of the stack may contain an atmosphere which is toxic to human beings.

In some plants, the clean blast furnace gas may be bled to the atmosphere without any ignition. In this case, every time the bleeder opens, there is an AOC.

The number of times that a clean gas bleeder will open in a particular steel plant depends upon the operating conditions in that plant. A reasonable average of frequency for such openings is about once a month and, if there is failure of ignition, it might take one to four hours to correct the condition.

Carbon Black Formation

Because heavy fuel oil is less expensive per heat unit that is metallurgical coke, the current trend in blast furnace ironmaking is to replace as much of the coke with heavy oil as is consistent with good operating practices. Where oil is fired in large quantities, under certain conditions not all of it is fully combusted by the wind of the blast furnace, forming carbon black which finds its way into the gas and from there to the scrubber water system. Oil is normally injected into the blast furnace by means of a pipe located at each tuyere. The reason for incomplete combustion accompanied by soot formation are as follows:

1. The distribution of oil is nonuniform from tuyere to tuyere. Thus, although the total amount of oil injected in all of the tuyeres may be capable of being burned by all of the wind which is being injected into the tuyeres, in one or more of the tuyeres the oil flow may be so high as to result in incomplete combustion. Some plants meter the flow of oil at each tuyere and thereby are able to properly balance the distribution of oil to all the tuyeres.
2. If the oil lance is not properly centered in the blowpipe, or if the spray is partially plugged, deflecting the flow of oil, the oil may not come into proper contact with the incoming air and may not be completely burned.

When the carbon black gets into the scrubber water, it has a tendency to float on the surface of the clarifier. The accumulation of carbon black may become great enough to interfere with the proper operation of the clarifier.

It is obvious that the preferred method of dealing with the problem of carbon black is to go to the source of its formation and make the correction there. This not only corrects the environmental AOC but also improves the utilization of energy in the blast furnace. Failing this, in some plants a wetting agent injection system has been provided. The operator of the treatment plant manually activates this system whenever carbon black is observed on the top of the clarifier. Although no actual data are available on the extent of this problem or the extent of its environmental impact, it does not appear to be widely spread nor of great severity where it does occur.

Furnace Control

In the preceding sections of this manual there has been discussion of the importance that smooth furnace operation plays in eliminating AOC. This is a particularly important subject and deserves special attention.

The first element of good furnace control lies in burden preparation. A burden that is sized and screened, that contains coke of adequate stability is conducive to a smooth operation. Screening and careful proportioning of the burden at the stockhouse is essential. After this, the burden must be placed in the furnace in such a manner that there is uniform distribution which tends to insure uniform flow of gas. These are the elements of good furnace operation; however, not all blast furnaces in the United States have all of these elements.

The next step in assuring smooth operation is to have a full set of appropriate and reliable indicators of operation. Some of these are instruments to measure top pressure, bottom pressure, stockline movements, temperature distribution at the top of the furnace, flow meters at the tuyeres for measuring oil injection and so forth. Once again, not all furnaces in the United States have these elements.

Finally, having all of the above elements of control, the last element to be applied may be a computer for the process itself. Such application is becoming more frequent in the larger high productivity furnaces. Smaller furnaces of which there are many in the United States may not find economic justification for computer control.

On the subject of computer control, the following statement has been made:[1]

> "To insure stable operation of large furnaces, it is essential to detect the condition in the furnace and the equipment maintenance condition and to produce such information for subsequent control. Key points in this operation are:
>
> 1. Top sampling and shaft sampling offer information on the radial gas distribution in the furnace, and provide guidelines for burdening control by charging sequence and moveable armors.
> 2. Venturi meters are provided to measure blast flow at each tuyere and thermometers mounted around the furnace stove monitor uniformity of circumferential burden distribution. If the distribution is not uniform, the oil injection control corrects for it.
> 3. The burden surface is monitored by infrared cameras and thermoviewers to maintain even gas flow.
> 4. Monitoring of slag extraction and tapping.
> 5. Information obtained by measurement of temperature, pressure, etc. is measured by computer to facilitate preventive maintenance.
> 6. Computer estimation of the furnace internal condition."

Figure 3 in a previous section of this manual shows an example of the primary means of instrumentation that is described above.

Another author[13] wrote about benefits of computer control for blast furnaces as follows:

> "The overall function intended for the computer has changed drastically in the last seven years from one of closed loop control to one of process monitoring. The primary purpose of the computer, however, is to improve the control and to some extent this was substantiated in a report prepared by our Research Department. They analyzed the variations in silicon, sulfur, manganese, coke rate, and number of off-casts for the No. 5 furnaces for two to three month periods; one with computer control and one without computer control.... The results were inconclusive for the coke rate and manganese content but the variations in silicon and sulfur from cast to cast were considerably better in the computer period."

4.2 CONTROL EQUIPMENT RELATED

Except for the gas cleaning equipment, which is essentially a part of the blast furnace process and as such not a pollution control device, there are two general types of pollution control equipment that may be found. The first is a fairly common, highly developed system for recirculating the water which serves the blast furnace gas scrubber and gas cooler. The second, which is more recent, and less common, is the baghouse which is used for capturing emissions from the casting of the furnace.

The systems for capturing the emissions from casting are described previously under Section 3.1. The major portion of the control system is directed toward the evacuation of fumes from the cast house building. This is supplemented by local fume hooding in some systems. In other systems, sole reliance is placed on the building evacuation portion.

Because the cast house emission systems are relatively new in the United States, there is little information regarding AOC as related to it. Nevertheless, because it is quite similar in nature to the building evacuation system for the electric arc furnace, it may be reasonably projected that the AOC associated with the cast house system will be similar to that for the electric arc furnace building. Therefore, for a discussion of this aspect of control related AOC, the reader is referred to the process manual on the electric arc furnace.

The control related AOC for the recirculated water system is given in the succeeding sections.

4.2.1 Startup

The major startup problems for a blast furnace recirculated water system occur only once in its life, that is when it is newly commissioned. Subsequent to that, shutdowns and startups may occur due to such uncontrolled situations as strikes. The startup and shutdown subsequent to the commissioning occur at very infrequent intervals and are usually unaccompanied by AOC. Therefore, this section will deal with a discussion of the practices that should be followed in achieving a successful initial startup. Assuming that the system is installed as a retrofit for existing blast furnaces, which is usually the case, they are:

1. Prior to testing out the system, all water basins and pipelines should be clean of debris such as wood, rags, welding rods, etc.
2. Testing of the system should begin well before the actual system startup, possibly two months in advance. It should comprise the following steps:
   a. Fill all basins and piping systems with service water from the mill.
   b. Pump the service water through all of the major pieces of equipment including the clarifier and the cooling tower.
   c. Run each of the pumps at least two days each to verify pumping capacity and to check for any vibration at the base of the pumps.
   d. Check all instrumentation for calibration and dependability.
3. In preparation for activating the system there should be a meeting of personnel who will be involved with the system for the purpose of instructing them in its maintenance and operation. Part of this training session should be the distribution of a simplified operating manual.
4. In a plant which has a multiplicity of blast furnaces, only a few of the furnaces should be initially tied into the new water supply. They should be run for about a month before tieing in the rest of the furnaces.

In a recirculating water system, one problem which can occur is a system imbalance caused by starting or stopping of pumps. The result is a rising or falling water level on clarifiers of sumps. In the case of rising level, the clarifier or sump may ultimately overflow, spilling onto the ground and potentially into a storm sewer.

4.2.2 Shut Down

Once a blast furnace recirculating water system has been in successful operation, it is rarely shut down except as a result of an unscheduled outage. Such outages will be covered under Abnormal Operating Conditions in Section 4.2.3. A planned shut down, if it should occur, is always accompanied by a planned shut down of the blast furnaces associated with the system. In this case, AOC from the shut down of the water system is essentially non-existant.

4.2.3 Abnormal Operating Conditions

In the recirculated water system which serves the scrubbers and the coolers of the blast furnace gas system, there is a need for utmost reliability. The system must operate 24 hours a day, day in and day out, without shut down. Any malfunctions in the system which might cause a shut down would either require a shut down of the blast furnace operation or an increased discharge of effluents into the receiving waterway. Because blast furnace ironmaking is a continuous operation which is exceedingly difficult to shut down without considerable prior planning, the tendency might be to allow an increase in the discharge of contaminants in the case of failure in the water system. In order to prevent this, wherever it is possible and feasible all operating components of the recirculating water system have in-place standby equipment to take over in the case of equipment failure.

The requirements of service for the water system are severe. Close attention must be paid to the quality of the recirculating water, otherwise a scaling tendency arises which may result in plugging of the pipelines and nozzles. The suspended solids in the system are heavy and abrasive. The former quality leads to difficulties of sumps being filled with suspended solids, thereby plugging the pumps and overleaoding the drives for the rake mechanisms of the clarifiers. The latter quality leads to abrasion and high wear in the pipelines and especially in the pumps, resulting in a shortened life, even when special abrasion resistant materials are employed. Finally, the recirculation systems for blast furnace cooler and scrubber water are almost invariably retrofits and in consequence, suffer from congested conditions and other design restrictions. These problems are covered in greater detail below.

Water Quality

In order to minimize the discharge of pollutants to the receiving body of water, blast furnace scrubber and cooler water is recirculated to the maximum degree possible. The BPCTCA model for this system as envisioned by EPA is shown on Figure 5 in Section 3.0. It will be noted by reference to this figure that the discharge allowances for contaminants are based on restricting the flow of the blowdown water to 3.2 percent of the recirculated water.

In 1969, Interlake, Inc. undertook a project to evaluate the performance of a blast furnace recirculation system under a grant from the Environmental Protection Agency. The results of this program are reported in References 14 and 15. Attempts were made to maintain dissolved solids in the system at 1500 to 2500 ppm, resulting in a blowdown of 7 to 10 percent. In about a year and a half of operation in this mode, scaling problems developed. One section of pipe showed a buildup of 5/8 inch. In the several succeeding years, acid additions were made to the water in an effort to control the Ryzner Stability Index of the water. Detailed discussion of this Index is given on pages 99 to 105 of Reference 14.

This program for controlling scale was only partially successful. In time, scale began to accumulate again which was caused primarily by precipitation of the dissolved solids in the recycle water. Subsequently, the addition of a commercial scale inhibitor to the recycle system was started. This has been successful as evidenced by later examination of the internals of the piping system during periodic shutdowns of equipment. The inhibitor itself caused a secondary problem, that of corrosion in the bronze impellers of the booster pumps. This was corrected by the addition of a copper corrosion inhibitor to the scale inhibitor product.

Figures 10 through 13 show one type of water nozzle.which is used in a commercially available blast furnace scrubber.[16] The manufacturer claims that its non-clogging feature is chiefly attributable to proper dimensioning of the large discharge opening. Figure 13 shows that the opening does not clog after years of operation; however, it is clear that the size of the opening is severely restricted. There is no information available on the quality of water that was used in the system.

Table 5 provides information on the quality of water which was discharged from one recirculation system which combines blast furnace and sinter plant water. This was tested for simple and complex cyanides.* Another sample downstream, after additional discharges, was tested for phenol, which in this case could only have come from the blast furnace scrubber water stream 102.

---

*Simple ≈ can be chlorinated.

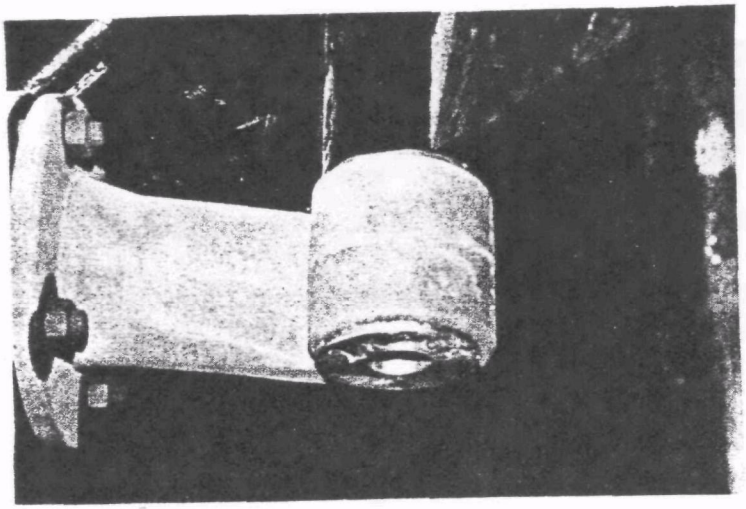

Figure 10. Swirl nozzle with replaceable insert arranged centrally above the throat of the scrubber.

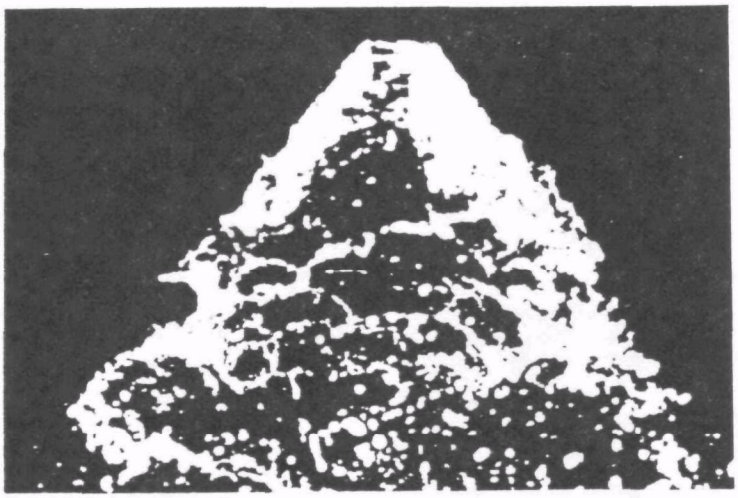

Figure 11. Disintegration of the scrubbing liquid above the throat without any gas flow.

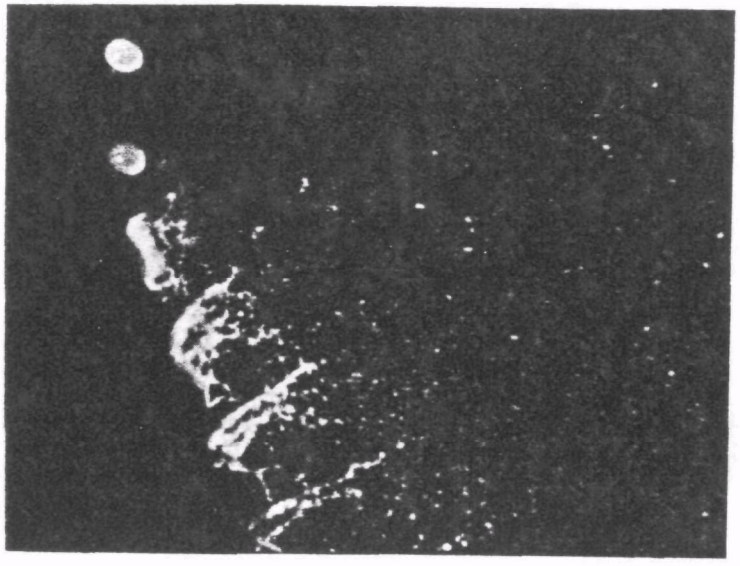

Figure 12. Disintegration of the scrubbing liquid with the droplets exposed to the action of the gas flow.

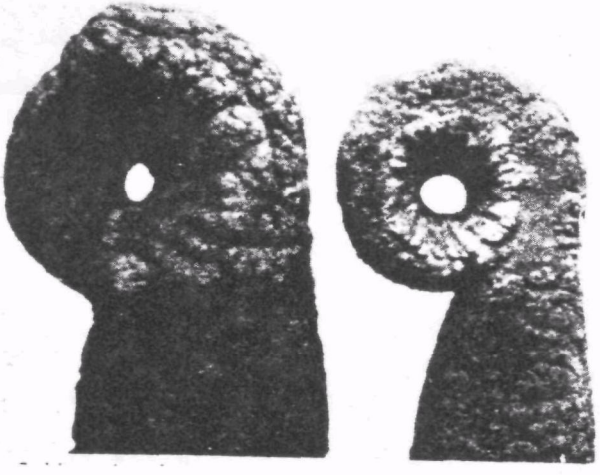

Figure 13. Swirl nozzles after years of operation. External deposits did not clog up the discharge opening.

Of particular interest is the high level of pH, the result of the cyanide treatment system and its relationship to the level of cyanide in the water.

TABLE 5. QUANTITIES OF CYANIDE AND PHENOLS FROM BF AND SINTER PLANT--JONES AND LAUGHLIN-ALIQUIPPA PLANT

	STREAM 102					OUTFALL 002					
	Flow mgd	TSS lb/day	Cyanide (Net) lb/day	Cyanide Removable lb/day	pH	Flow mgd	Oil lb/day	pH	TSS lb/day	NH_3 lb/day	Phenol lb/day
1/1-1/31		---	---	---	9.4		---	7.9	---	---	---
	19.6	3780	48.5	5.25	---	102	0	---	58304	170	49.5
		9399	97	28	10.3		---	10.5	89321	1106	182
2/1-2/29		---	---	---	---		---	9.0	---	---	---
	19.6	18135	22	2.5	9.8	102	0	---	264400	2180	236
		34736	40	20	10.2		0	9.6	376668	3318	510
3/1-3/31		(2288)	(7.4)	(30)	9.0		(1000)	8.8	39131	4683	(72)
	19.6	364	56	30	9.2	102	(425)	9.0	53167	5452	187
		7519	199	167	9.5		(0)	9.2	66695	6924	435
4/1-4/30		326	(9.6)	0	8.9		(580)	8.8	(9878)	1547	124
	19.6	3310	1.5	0.049	---	65	803	---	20103	2811	182
		7028	9.5	17.3	9.5		2713	8.3	44948	4455	281
5/1-5/31		5230	(20.1)	(20.1)	9.1		(1632)	8.7	13850	515	0
	19.6	10420	(2.5)	(3.7)	---	65	(75)	---	27844	2101	155
		15202	8.97	5.8	9.5		1090	9.1	40189	3207	345
6/1-6/30		4577	9.31	3.4	9.1		542	9.0	15962	(5812)	195
	19.6	9971	19.45	8.2	---	65.5	547	---	38310	661	316
		15038	27.3	16.2	9.6		1626	9.2	53943	3249	423
7/1-7/31		2125	33	15.5	6.8		50	7.3	27522	2293	261
	19.6	16019	277	226	---	66	550	9.1	57976	4350	1355
		34817	914	846	9.8		550	---	104537	5994	3606
8/1-8/31		(6538)	60.8	5.39	8.2		(2202)	8.2	1651	974	166
	19.6	13077	745	158	---	66	(1238)	---	31926	2664	1592
		54433	1677	310	9.6		1514	9.1	97427	4387	5105
9/1-9/30		1961	19.1	4.25	8.9		(1376)	8.2	4403	478	26.9
	19.6	7220	28.2	6.21	---	66	(457)	---	23394	1756	269
		11115	37.3	8.33	9.8		0	9.1	34953	2411	489

NOTES: (1) The Company monitors the blast furnace and sinter plant waste treatment facility water for cyanides after the alakaline chlorination treatment unit (stream 102). The phenol in this water is measured after dilution (002). Quantities found using grab samples (one each seven days) are shown above. Three values are shown per month (min., avg., max.).

(2) By permit, the allowable total cyanide from stream 102 is 261 lbs/day average and 761 lbs/day maximum.

The above Table was made available from the Pennsylvania Department of Environmental Resources files. Table 6, available from these files, gives upsets in five other steel plants. Those upsets relate to excursions in pH, suspended solids, and phenol. It is of interest that certain types of contaminants are more of a problem to one plant than to another. In other words, problems of upsets in the blast furnace scrubber water system appear to be under control in one plant and susceptible to AOC in another plant. This fact emphasizes the relationship between AOC in the water system and specific design, construction, and operating conditions.

TABLE 6. REPORTS FROM NPDES FILES -- UPSETS IN SCRUBBER WATER SYSTEM

Date	Abnormal Operation	Duration	Plant
I. UPSETS IN PH CONTROL			
2/6/75 2/7/75	pH < 6.0 during acid cleaning of blast Furnace A, B, C, and D. The acid was sent to a sump that was believed to drain to a system where neutralization was available. It drained direct to the outfall, however. A new piping arrangement will be made.	1.5 hrs	A
2/27/75	pH < 6.0 due to acid cleaning of the Blast Furnace C scrubber. The scrubber sump had a continuous overflow to the sewer; acid overflowed because personnel were unaware. Plant to institute a "field survey" before all acid cleaning operations.	Intermittent over 75 min	A
8/12/75	pH > 9.0 due to excessive addition of KOH to the No. 1 Blast Furnace thickener. The sample line for the pH control became plugged so an improper low pH signal continued requesting more KOH.	1.5 hrs	A
8/19-24/75	pH > 9.0 High cyanide output from the blast furnaces necessitated pH increases to prevent cyanogen chloride discharges from the cyanide destruct station.	Intermittent	A
3/15-15/76	pH > 9.0 due to failure in the pH probe. Excess KOH entered the system; the probe has been replaced.	10 mins	A

TABLE 6. (cont'd)

Date	Abnormal Operation	Duration	Plant
3/20/76	pH < 6.0. During acid cleaning of the A-3 Blast Furnace precipitator appraently some acid entered the sewer. Spent acid is usually pumped to the No. 1 Blast Furance thickener where it can be neutralized by the alkali-chlorination unit.	10 mins	A
6/7/76	pH > 9.0 due to a faulty signal from the pH controller of the alkaline chlorination unit for No. 1 Blast Furnace thickener.	30 mins	A
3/12/76	Exceeded allowable cyanide discharge by 279 lbs. The outfall is from the blast furnace, however, no further determination of cause was possible.	Exceeded daily limit	B
7/76	pH of cooling water for blast furnace wind turboblowers outfall down to 5.9.	Unknown-condition present for one of 3 July samples	D
II. EXCESS SUSPENDED SOLIDS TO OUTFALL			
5/26/76	Total suspended solids limit was exceeded. The No. 5 Blast Furnace thickener slurry line was out of service so solids were being removed by truck. Truck breakdown resulted in reduced removal rate causing more solids in the thickener overflow.	Exceeded daily limit	A
12/29/75	Total suspended solids exceeded the limit by 125 kg/day due to valve repair (blast furnace and sinter plant).	Exceeded daily limit	C
1/2/76	Total suspended solids limit was exceeded by 16 kg/day due to downtime for valve repair (blast furnace and sinter plant).	Exceeded daily limit	C
1/13/76	Total suspended solids limit was exceeded by 77 kg/day due to frozen pipes (blast furnace and sinter plant).	Exceeded daily limit	C

TABLE 6. (cont'd)

Date	Abnormal Operation	Duration	Plant
3/10/76	Total suspended solids limit was exceeded by 112 kg/day due to excess blowdown (blast furnace and sinter plant).	Exceeded daily limit	C
7/27/76	Total suspended solids limit exceeded due to line blockage causing overflow from the settling basin (blast furnace and sinter plant).	Exceeded daily limit	C
7/15/75	Total suspended solids exceeded the limit by 1287 kg/day due to clarifier shut down for cleaning and high river TSS background (blast furnace and sinter plant).	Exceeded daily limit	C
11/13/75	Suspended solids maximum concentration exceeded by 10 mg/ℓ due to excess overflow from the recirculation system (blast furnace and sinter plant).	Unknown	C
12/19/75	Total suspended solids exceeded the limit by 149 kg/day due to an electrical malfunction (blast furnace and sinter plant).	Exceeded daily limit	C
12/31/75	Same as above, but by 198 kg/day.	Exceeded daily limit	C
III. EXCESS PHENOL TO OUTFALL			
8/18/75	Phenol 8% high in one outfall. Probably due to discharge from gas drip legs in the vicinity of the outfall. These will be incorporated in gas washer water recirculation system.	Unknown-found in one sample	E
4/19/76	Phenol high due to gas drip legs in Blast Furnace non-contact cooling water and process water.		E

In order to prevent AOC associated with water quality problems in a blast furnace recirculation system the following measures should be taken:

1. Provide for the control of the scaling index in the system. This may require the addition of acid and scale inhibitor compounds. It is necessary to have a scheduled program for analyzing the quality of water in order to assure that scaling conditions are avoided.
2. At points in the system that are particularly susceptible to scaling, it is desirable to provide a bypass section which will permit inspection for observation of actual scaling conditions without the necessity of having to interfere with the operation of the recirculated water system.
3. Scrubber spray nozzles should be as large as possible to minimize the effect of any scaling which does occur.
4. The blowdown from the recirculated system should be carefully monitored in order to assure minimum quantity of blowdown consistent with permissible levels of dissolved solids.
5. Components of the system should be selected with attention to the potential for scaling conditions. In particular, the cooling tower should have open internals without baffles to avoid premature failure from the accumulation of scale deposits.

If all of the above are observed AOC resulting from problems with water quality will be minimized.

Pumps

A typical recirculating water system may have 20 to 30 pumps or more and in addition, perhaps four times as many valves. Because of the heavy abrasive particulate matter in the water, life expectancy of a pump unit handling the slurry is usually about one to two years, although reports of four to six months are not uncommon.[15] The combination of a large quantity of pumps with a relatively short life results in the necessity of almost constant attention and maintenance of these units to keep the system operative. It also mandates that all pumps have standby units in order to avoid AOC.

There are two areas in the pumps which give particular problems. One is wear in the pump impeller. This may be minimized by the use of hard abrasion resistant materials or rubber linings and by the selection of as low impeller speed as is feasible in consideration of pumping requirements. The other area of high maintenance is the pump seal. The usual method of overcoming this problem is to use clean pressurized service water on the seals of horizontal pumps or to avoid seals entirely by the use of vertical pumps. In the latter case, it is desirable to have the shaft of cantilevered design so as to avoid any bearings in the water.

One of the special problems in the handling of slurry is that its high density leads to rapid settling in the sumps and in pipelines. It is important when designing the system that any sections of piping or sumps which may become isolated and, therefore dead, or that any pocket in which the circulation rate becomes substantially reduced must be eliminated or held to the minimium possible.

In most recirculated systems for blast furnace scrubber water, the system is retrofitted to existing furnaces. If space is limited, the sumps for collecting water from the coolers and scrubbers may be too small for smooth pump operation. Because they are small, they are unable to even out the variations in flow from the system. They are also unable to provide a reasonable surge capacity without a large variation in head to the suction of the pump. Any small upset in the system may cause an overflow from the pump to the plant sewers.

Also, if space is congested at the blast furnace, the pump house for the slurry pumps is apt to be too small for the condition of the pumps. Bearing in mind that the pumps must be serviced on a regular basis and repaired at frequent intervals, it is of great importance that there is adequate space around the pumps for servicing them, good handling facilities for removing and replacing pumps and lay down area for working on the pumps that have been removed. Adequate floor drains should be provided to avoid any messes and pools of water that may otherwise occur from leaking seals and the like. Entrance and egress from the building should be convenient so as to facilitate the movements of the operating and maintenance personnel. Finally, ventilation should be adequate so as to avoid the potential accumulation of toxic carbon monoxide gas.

The single most important item in avoiding AOC as a result of pump failures is to provide an adequate amount of redundant pump capacity. This, coupled with a good preventive maintenance program and prompt repairs of worn out pumps can substantially avoid AOC due to pump failures. In one plant, where pump problems are rather substantial, there is a diversion sump between the sewer which receives the overflow from the slurry pumps and the receiving body of water. As the level in this sump raises, it returns contaminated water via a second sump back to the slurry system. This diversion sump has an emergency weir which overflows to the sewer. A level recorder on this diversion sump has indicated that overflows have occurred about once a week.

A clarifier for blast furnace service should have a specially high capacity rake drive and provision for automatic lifting of the rake mechanism. Both features are required because of the high density of the sludge. They are aggravated if very coarse particulate matter (-1/4 inch + 100 mesh) is permitted to enter the clarifier. Because this material also tends to plug the piping from the clarifier to the sludge pumps, all pipelines should be equipped with cleanout plugs and blowout connections in order to facilitate the removal of stoppages. One plant[14] which had experienced difficulties with stalling of the rake drive and plugging of the underflow piping has evolved a procedure which tends to overcome the problem. The blast furnace clarifier in that plant is equipped with two underflow lines and two pumps, one on-stream and one on standby. The pump on standby is given prompt corrective and preventative maintenance so that it is always ready for immediate use. If there is evidence of plugging, both underflow pumps are immediately put on-stream. This tends to clear the blockage. In addition, this plant has found it desirable to provide a second clarifier as backup for the first which may then be shut down for repairs or cleaning without interfering with the operation of the recirculated water system.

One blast furnace plant[27] has provided a coarse wire mesh screen over the entire clarifier in order to avoid the entrance of large lumps of foreign matter. There have been occassions where nut coke from the blast furnace has entered the recirculated water system and eventually plugged some of the

cooling tower sprays. In one plant,[30] rake failures on one clarifier have been found to occur up to 2 times per year, mostly as a result of heavy grit material coming over from the blast furnaces. This plant has two clarifiers, both on continuous operation. When a clarifier fails, all of the dirty water is diverted to the one still operating. The quality of water leaving the one still in operation decreases, but increased addition of polymer is used to improve the rate of sludge settling. Sometimes solids carry over into the hot well and settle, necessitating the cleaning of the hot well. In this plant there are two hot wells, permitting one to be down for cleaning. Occasionally, solids carry over to the cold well of the cooling tower making it necessary to clean that sump as well.

As discussed previously under process upsets, conditions may occur in the injection of oil in the blast furnace which result in the formation of carbon black. The carbon black enters the water systems, finds it way to the clarifier where it floats on the surface and becomes a mass which interferes with proper operation of the clarifier and which may be blown into the at mosphere. A wetting agent may be used to entrain the carbon black with the water, however, the best procedure is to avoid the formation of the carbon black.

Filters for dewatering the blast furnace sludge are usually quite reliable, although one plant[30] which initiated operation with only one filter found it necessary to install a second one subsequent to commissioning the plant. Originally, when one filter was down for maintenance the sludge was pumped to a pond in the ore yard. This pond has two to three days holding capacity. Further filling causes an overflow to the pellet storage area which, after drying takes place, becomes a source of fugitive emissions. The second filter helps to overcome the necessity of having to pump to the pond because it provides redundant capacity. Another plant found it highly desirable to provide variable capacity sludge pumps in order to insure uniform sludge loadings to the filters with varying densities of underflow from the clarifier. The installation of a barometric leg between the vacuum pump inlet and the filtrate-air separation tank increased the reliability of that unit. This

item prevents the entrance of abrasive slurry into the pump in case the filtrate-air tank water level gets too high. It is also desirable that all overflows from the vacuum be run through open drains as opposed to enclosed pipelines. This facilitates the removal of any blockages which may occur. As indicated under the heading Water Quality, above, it is necessary to blowdown a portion of the recirculated water in order to avoid the buildup of dissolved solids. Common practice is to discharge a portion of the clarified water to a receiving stream. One plant[14] has permission to discharge it to the sanitary sewer system of the municipality. Another plant[17] uses this water to cool the slag in the slag pits of the blast furnace where it is evaporated. This last practice increases emissions of dissolved organics to the atmosphere.

General Operation

One of the problems in retrofitting a recirculating water system to an existing blast furnace is to prevent hydraulic imbalance. Imbalance may be the result of unaccounted-for discharges into the system, leakage into various underground sewers and sumps that are too small. Diligence must be applied to isolate and remove from the system the unwanted in-flows. Good communication between the operators of the blast furnace and the pump tenders associated with the water system should be established in order that changes in water flow at the furnaces can be made without upsetting the water balance in the circulation loop. In one plant,[5] the recirculation system incorporated sealed dump tanks at each blast furnace. When individual furnaces are periodically shut down, the furnaces are isolated from the clean gas main by filling the gas cooler with water until a seal is formed between the clean gas main and the furnace. When the furnace goes back on-line, this water has to be dumped to permit the flow of gas through the gas cleaning system. The dump tank is designed to prevent a rapid surge of 15,000 gallons, the volume of the water seal, through the water system which might cause an imbalance in the pumping system. A seal dump tank works as a holding tank into which the water seal can be dumped quickly and then metered back at a much smaller flow rate.

In one plant,[30] monitoring instruments in the recycle water system that alerts operators to impending upsets include the following:

HIGH PRESSURE ALARMS

1. Blowdown discharge
2. Hot well discharge

LOW PRESSURE ALARMS

1. Blowdown discharge
2. Hot well pumps
3. Cold well pumps
4. Seal water
5. Instrument air
   - Hot well high level
   - Hot well low level
   - Cold well pumps on hot well level control
   - Cold well discharge low temperature
   - Cold well discharge high temperature
   - fans high vibration (cooling towers)
6. Recorders are maintained on the following operations:
   - Cold well discharge rate
   - Blowdown discharge
   - Cold well discharge temperature
   - pH of diversion chamber
   - Hot well discharge pH
   - Monitor rake torque

In the above mentioned plant, staffing to operate the recycle system includes one operator, one pump man, and one filter man assigned on three shifts per day. Maintenance requires two to four millwrights on the day shift plus two electricians as required.

Figure 14 shows a simplified diagram of the recirculated water system at Inland Steel Company. There are several features in this system that contribute to good operaton as follows:

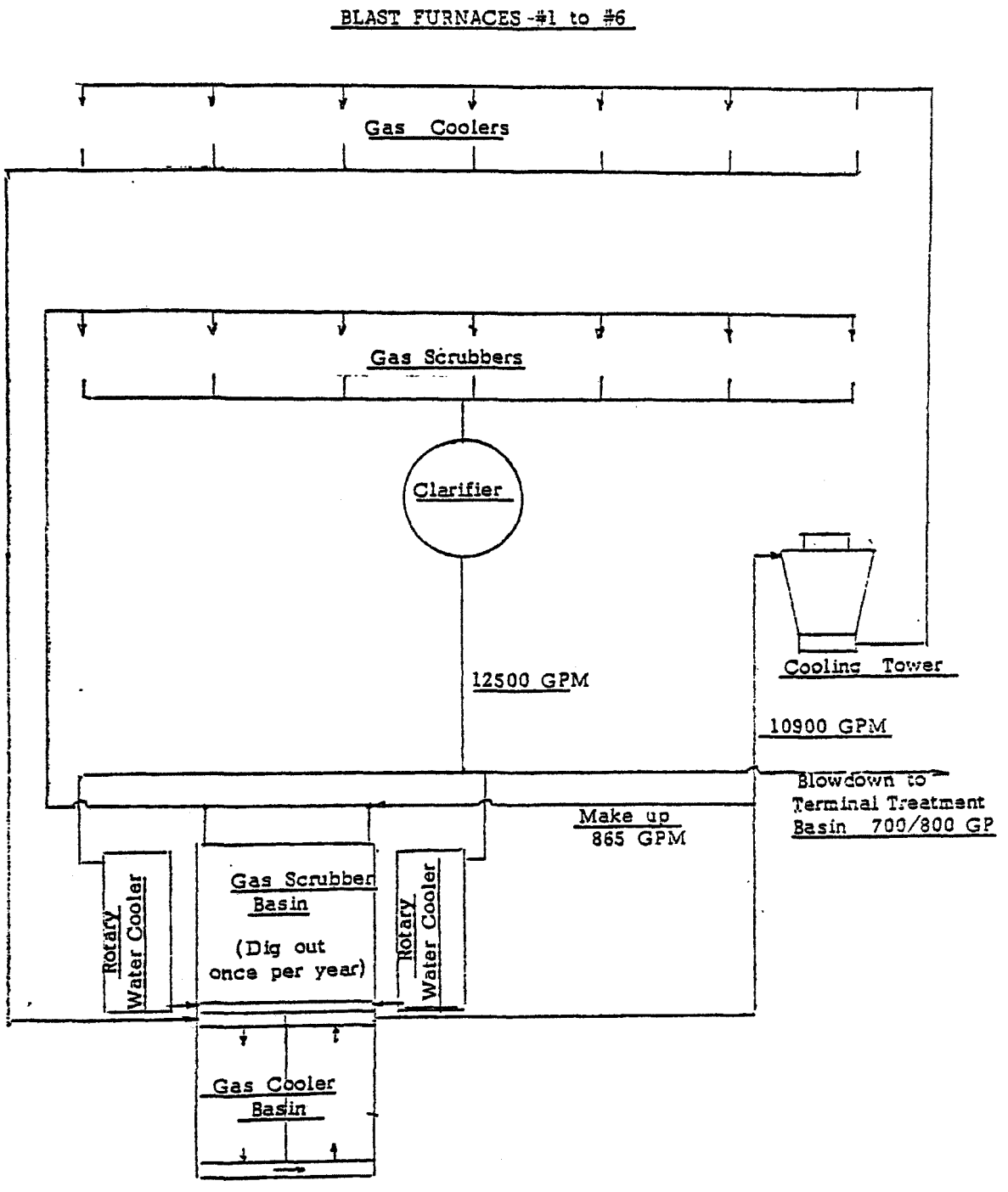

Figure 14. Inland Steel blast furnace water system.

1. The gas cooler and scrubber systems are separate loops, with the makeup water being supplied to the cooler loop which in turn blows down to the scrubber loop. This has the advantage of reducing the hydraulic load to the clarifier and in consequence its size. It also assures a cleaner supply of water to the gas coolers.

2. The blowdown from the system is discharged to a terminal treatment basin. Thus any upset in the recirculation system which might result in AOC is prevented by further treatment of the effluent.

Figure 15 shows the gas cleaning system for No. 13 Blast Furnace at the Gary Works of U.S. Steel. Some noteworthy features here are as follows:

1. A pug mill at the dust catcher is used to condition the dust with water so as to avoid emissions from the handling of the dry dust.

2. A high differential pressure for the gas scrubber provides high efficiency of gas cleaning.

3. The classifier which preceeds the thickener protects that unit from coarse particulate matter and reduces the potential for jamming and plugging.

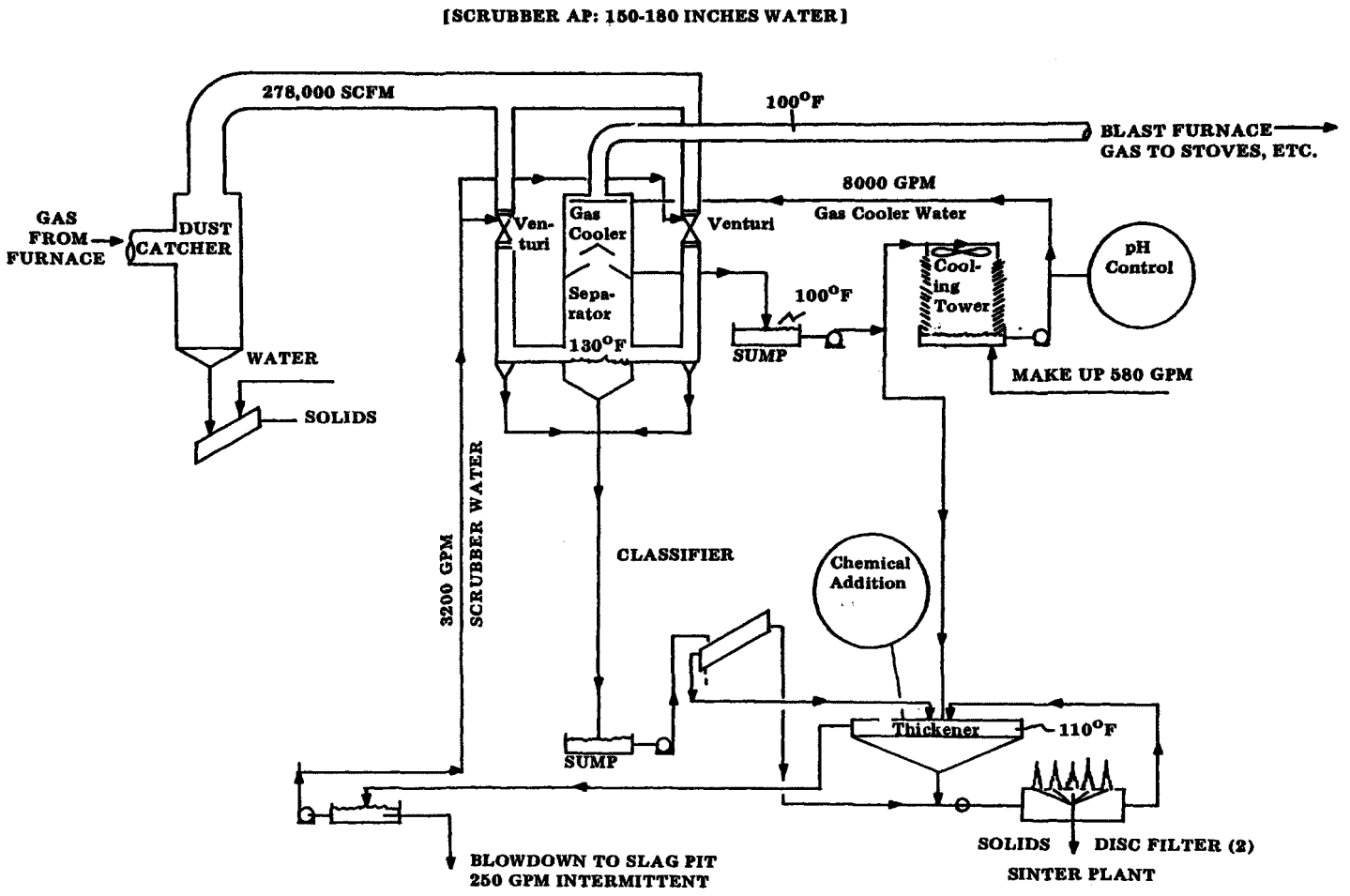

Figure 15. Gas cleaning system for No. 13 Blast Furnace - U. S. Steel, Gary Works.

5.0 GRAY AREAS

There are three locations in the blast furnace operation where emissions to the atmosphere take place and do so in variable quantities due to certain factors. These are the emissions from cooling the slag, the emissions from bell leakage and emissions from casting the furnace. Emissions from handling the slag may vary due to the method of cooling the slag and the amount of water used, if any. The emissions which result from the cooling operation may be considered to be normal with respect to the type of operation involved. There is also no control equipment applied in current technology. For both of these reasons, any variations in emissions from the cooling of slag is not considered AOC.

The other two locations in which variable emissions occur require more extended explanations as is given below.

Emissions from Bells

An estimate in a Battelle document,[18] of leakage from the bells of blast furnaces in the United States is given by the expressions:

$$\text{Gas leakage} = 500 + 1500\ N\ \text{cfm} = 14.2 + 42.5\ N\ \text{scm}$$

where N equals the number of years in service.

The same document uses the production data of 1973 where N = 6.9 years to calculate a total leakage of blast furnace gas in the amount of 23.6 x 10^9 scm (833 x 10^9 cubic feet) for 1973.

The gas that leaves the furnace contains the following gaseous components:[19]

		Typical	Range
Carbon Dioxide, CO_2	=	11.5%	8-15%
Carbon Monoxide, CO	=	27.5	23-33
Nitrogen, N_2	=	60.0	50-60
Hydrogen, H_2	=	1.0	1.0-3.5
TOTAL		100.0	

The actual amount of each component will vary with the individual blast furnace and its mode of operation. For example, the amount of hydrogen will be increased by such factors as high humidity of the hot blast and high rates of fuel injection in the tuyeres.

Blast Furnace Top Emissions From Bells

Blast furnace gas as it leaves the burden and enters the uptakes has an average volume of 1800 scm/Mg (63,500 scf/ton) and contains an average of 84 lbs/ton (42 kg/Mg) particulate matter[20] This dust loading equates to 21.2 g/scm (9.26 grains per SCF). A typical analysis of the flue dust particles is as follows:

TABLE 7. ANALYSIS OF FLUE DUST PARTICLES*

Element	Symbol	Percent
Iron	Fe	48.95
Carbon	C	12.08
Silica	SiO_2	12.08
Lime	CaO	4.31
Magnesia	MgO	1.28
Sulfur	S	0.59
Manganese	Mn	0.38
Phosphorus	P	0.045
Carbon (as coke fines)	G	various

*Particles are expected to show considerable variation in composition.

The typical particle size for blast furnace dust is as follows:[14]

TABLE 8. PARTICLE SIZE OF BLAST FURNACE DUST

Particle Size	+ 635	microns	-	11 % by wt.
	635 - 423	microns	-	13
	423 - 317	microns	-	8
	317 - 254	microns	-	7
	254 - 169	microns	-	7
	169 - 127	microns	-	6
	127 - 102	microns	-	3
	102 - 94	microns	-	5
	94 - 78	microns	-	2
	< 78	microns	-	38
				100 %

A new bell on a blast furnace is normally machined so that it fits to its seat within 50 microns (0.002"). Referring to Figure 16 which is a plot of the data in Table 8, about 28 percent of the particles in raw blast furnace gas is less than 50 microns and can pass through the seat of the bells when the seat is in new condition. This means that there is a potential of emitting approximately 28 percent of the particulates in the raw gas annually through the bells.

There are several factors which must be considered in assessing the above data:

1. Apparently the Battelle formula was based on the graph which was derived from Japanese blast furnaces operating in the range of 69 to 148 KPa (10 to 21.5 psig). Since most blast furnaces in the United States operate in the range of 31 to 34 KPa (4 1/2 to 5 psig), the correction factor for the formula and for the corresponding gas and dust quantities should be

$$\sqrt{\frac{32.75}{108.4}} = \sqrt{\frac{4.75}{15.72}} = 0.55 = \sqrt{\frac{\text{Avg. pressure US}}{\text{Avg. pressure Japan}}}$$

2. The gas leakage was based on a service life of N = 6.9 years In the U. S., most companies change bells every 5 years and the average life is N = 2.5 years. The correction factor for bell life is:

$$\frac{2.5}{6.9} = 0.36$$

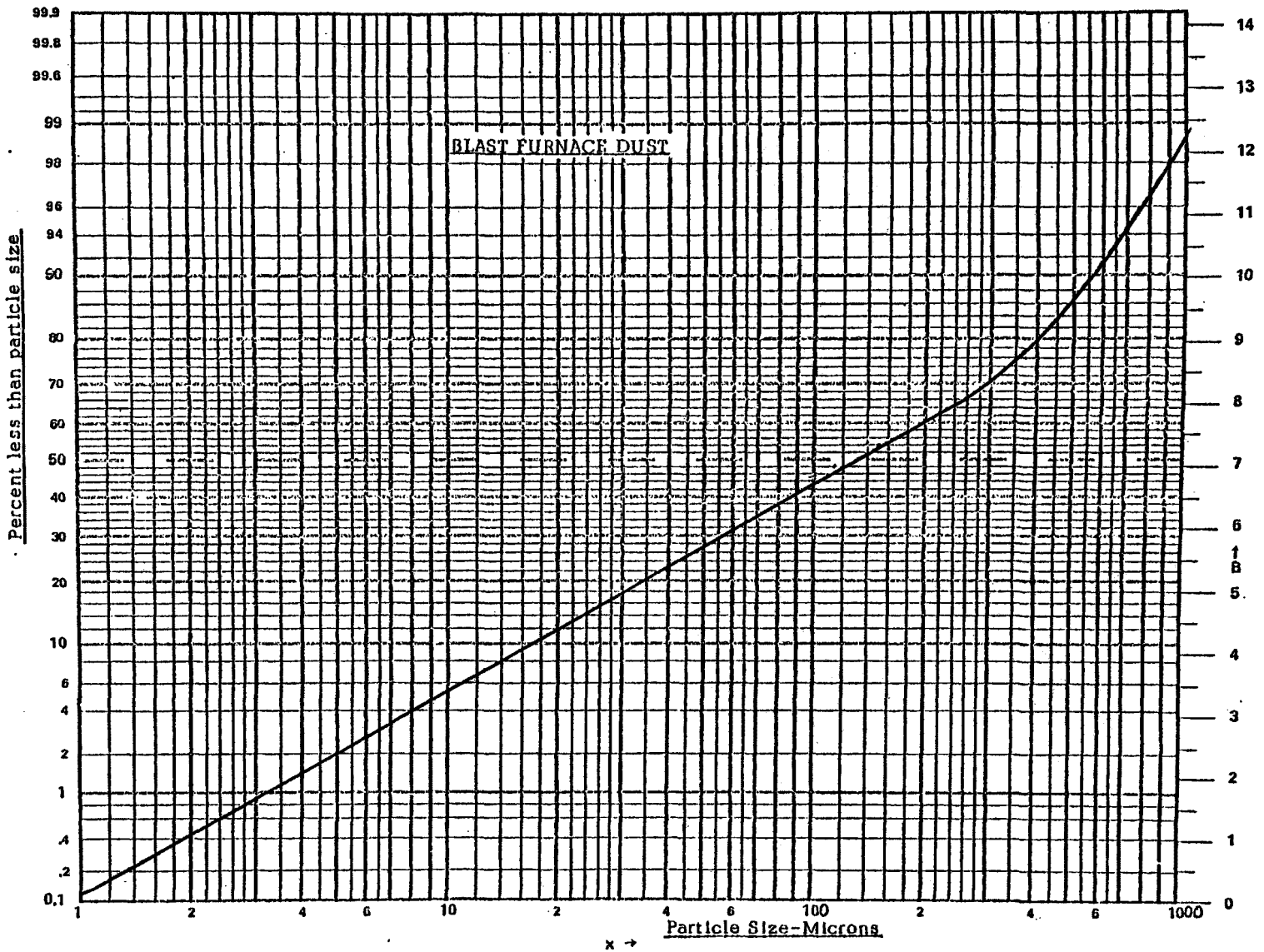

Figure 16. Plot of the data presented in Table 8.

3. The amount of particulates which leaks from the bells may be reduced by virtue of the filtering action that takes place when burden material is on the bells.

4. The amount of particulates (and gas) which leaks from the bells may be increased substantially through seats that are worn out and cut by the dust-laden gas.

5. It is assumed that the calculations on gas leakage relates to a furnace equipped with two bells. Some new ones have three bells and use nitrogen for pressurizing. Some use an arrangment which replaces at least one of the bells with a valve having a soft seat.

The correction estimate for leakage of blast furnace gas from the bells is:

$$(23.6 \times 10^9) \times 0.55 \times 0.36 = 4.65 \times 10^9 \text{ m}^3 \ (165 \times 10^{11} \text{ ft}^3) \text{ annually}$$

of which

Carbon monoxide is about 27.5 percent or 1,498,000 Mg (1,650,000 tons)

Hydrogen is about 1 percent or 3,630 Mg (4,000 tons)

Using a gross loading of 21.2 g/scm (9.26 gr/scf) for the raw gas and 28 percent of that amount in the gas leaked, the estimate mass of particulates is:

$$.28 \times \frac{9.26}{7000} \times \frac{164 \times 10^9}{2000} = 30{,}000 \text{ tons annually}$$

giving an emission factor of 0.3 g/kg (0.60 lbs/ton) of iron.

The above estimates are based on data, some of which has not been verified. Members of the American Iron and Steel Institute task force assisting with this study and review of the documents produced believe that the above estimates significantly overstate the case of bell leak emissions. Although they cannot be accepted as accurate, they indicate that the problem may have national significance to air quality and may be of particular significance in certain non-attainment localities. The available data are so few that this is an area in which further research is a necessity. On any particular blast furnace, as service life on a particular bell increases, the emissions past its seal become greater. The question is whether the increase in emissions

are "normal" or AOC. The former appears to fit better and thus the problem is listed as a "gray" area.

Emissions From Casting

At the present time, there are only a few blast furnaces in the United States which are equipped with environmental control systems to capture the emissions which result from casting the blast furnace. In such systems as are installed to date, one of the key elements of control is a building evacuation system for the cast house itself. For those cast houses where no control is installed, there are numerous variations in process and operating conditions which may increase emissions to the atmosphere. These are described below. For cast houses that are equipped with environmental controls, the variations in emissions from the process do not have a significant effect on the atmosphere, but only on the amount of capture in the final control equipment.

Generally speaking, smooth furnace operation leads to minimal casting emissions. The blast furnace operator finds it to has advantage in terms of economic production of iron to aim for as smooth a performance as is possible consistent with the technical capability of the furnace, its raw materials, etc. He thus has an incentive to operate in such a manner and to minimize emissions to the atmosphere from upsets. If the current trend of providing control for blast furnace cast houses continues, such upsets as do occur will not produce significant AOC. For these reasons, upsets which cause excess emissions are not classified under AOC in this report, but are described below under "gray" areas.

Tap Hole Related

Emissions from casting are particularly heavy at the tap hole of the furnace. In recent years, the trend toward larger furnaces and higher top pressure has increased the problems with the tap hole and the potential of emissions. In the past, a carbonaceous clay tap hole mix with approximatly 16 percent moisture content was used. This wetness caused a cloud of iron oxide fumes to be released whenever the tap hole was opened.[21] Such a tap hole eroded quite rapidly and by the end of the cast, it was usually necessary to pull wind in order to control iron flow. Recent work has been directed

toward altering the mixes by using chemical binders and adding calcines. The resulting mixes are stronger but more difficult to push. To accommodate the stiffer mix, the mud gun may have to be modified to increase nozzle pressure. At the same time, it is necessary to insure that the tap hole drill has adequate capacity to penetrate the new mixes.

Conventional tap hole mixes are particularly deficient when using higher blast pressures. In the Gary No. 13 Blast Furnace, it was found that when the blast pressure was increased to between 275 to 345 KPa (40-50 psi) the tap hole glaze could not withstand erosion during the cast. It was not uncommon to have the tap hole erode until it was larger than the mud gun nozzle, 15.5 cm (6"). With their current practice of using anhydrous mixes, the erosion problem has been overcome. This is important in regard to emissions because erosion of tap holes increases the flow of iron and slag thereby causing increased emissions even though the time period has been shortened. Not only is there improvement in this area, but there is a significant decrease in the number of coke messes which are caused by coke being thrown out of the eroded tap hole.

Casting Emissions

A slow cast, because emissions persist over a longer period of time, can result in an increased mass of emissions per cast. This is especially true when the slag is too limey, or there is a restriction of the tap hole. It is avoided by keeping a reasonable length of tap hole and maintaining proper slag chemistry. It is reported that slow casts may occur five times a week on a particular furnace and may last for one to one and a half hours.

Hot limey slags increase the amount of white fume coming from the slag. These are especially prevalant after the blow-in of the furnace as is discussed earlier in the manual. After that, it may occur as frequently as once per day or as long as once in several months. Emissions from limey slag may last 45 minutes per cast. They are avoided by keeping the furnace slag as lean as is possible yet still meet sulfur specifications, the higher the sulfur allowed the leaner the permissible slag. Lean slags also are conducive to smoother furnace operation, lower coke rates, and higher productivity. One

way of permitting a blast furnace to operate with higher sulfur in the iron is to provide an external desulfurizing facility for the iron.

When the molten iron is low in silica and high in sulfur, it tends to tap colder than normal and results in increased emissions of reddish fumes and kish. This may occur twice a week. If the final blow of one cast is "cold", the ensuing cast could also be cold.

Burning of Skull

If a skull develops inside the tap hole of the furnace, it may be necessary to lance it with oxygen. This can cause an emission of reddish fume for a period of five to 10 minutes. The necessity for lancing with oxygen is more likely to exist in the case of a rotary tap hole drill than in the case of a percussion type tap hole drill. The latter type drill is usually more able to penetrate the skull than the former.

5.1 METHODS FOR MINIMIZING AOC

5.1.1 Process Related

In the preceding sections of the manual, various methods of minimizing process related AOC were described. A summary is given below:

1. Provide a properly screened and sized burden.
2. Provide high stability coke, at least 50, although 55 is better. This tends to avoid coke messes.
3. Provide adequate furnace instrumentation and control.
4. Use anhydrous tap hole mixes to avoid fast casts and reduce coke messes.
5. Direct attention to improved construction of the furnace top such as hard facing of bell seats, provision of bell sealing rings, nitrogen equalization, etc.
6. Provide computer control of furnace operations, if technically and economically feasible for the furnace involved.
7. Provide control of moisture in the hot blast. This will move the furnace better.
8. Provide control for the distribution of fuels which are injected into the tuyeres. This helps to move the furnace, avoids formation of carbon black and increases the efficiency of energy utilization.

9. Provide external desulfurization of iron. This results in smoother furnace operation and uses less stone and coke as well as produces more tons of iron.

10. Increase the emphasis on preventative maintenance.

5.1.2 Control Equipment Related

1. Provide all pumps with standby units.
2. Provide adequate space and means for servicing pumps.
3. Provide adequate surge capacity in sumps and retention time in recycle systems in order to avoid pumping problems and hydraulic imbalances.
4. Control pH in recycled water to avoid scaling.
5. Install instrumentation for monitoring and alarm.
6. Use scrubbers which have large nozzles which minimize plugging problems.
7. Use scrubbers which have variable throats to maintain desired pressure drop. Flooded scrubber walls are desirable to minimize wear.
8. Provide a discharge tank for gas seal water in order to permit rapid dumping of the gas seal so as to avoid system imbalances.
9. Cover clarifier with wire mesh to avoid entrance of foreign objects.
10. Provide a barometric leg between the filter and the vacuum pump.
11. Collect and monitor discharge water. Routing it to a final treatment basin provides an increased measure of safety in avoiding AOC.
12. Maintain good communications between furnace operators and pump tenders.

5.2 GENERAL

One of the most effective ways of measuring AOC whether process or control equipment related, is for the responsible environmental control agency to persue an active and diligent program of monitoring AOC. Monitoring reports from such agencies are a most valuable record from which to develop normal operating patterns for the industry. Frequency and duration of specifically defined AOC's is not at this time clearly defined nor well-known in many cases.

It is recommended, therefore, that the recording of AOC's be continued by agencies already doing so, and be initiated by those agencies not doing so. Figure 17 shows an example of a suitable reporting form. This example was developed by drawing upon the best features of several reproting forms currently in use.

As stated previously, the factors that avoid emissions from abnormal process conditions also provide an incentive to the operator in terms of increased production and reduced costs of operation. All blast furnace operators would certainly prefer to have the most modern and most well maintained equipment possible as well as the best burden available so that he may be assured of smooth operation. Unfortunately, factors of plant age, existing plant limitations, availability of raw materials, economic factors, etc., prevent the realization of this ideal. In consequence, operations are often less smooth than desired and abnormal conditions result which cause excess emissions.

It is to be expected that abnormal emissions due to process upset will decrease with time. There are several pressures which will accelerate progress toward the goal of avoiding upsets. One is the development of new knowledge and techniques in the control of the blast furnace process. Another is the economic advantage of implementing such advnaces wherever implementation is feasible. Finally, there is the pressure imposed to meet environmental regulations.

POLLUTION CONTROL AGENCY:

ADDRESS:

NOTICE OF MALFUNCTION, STARTUP OR SHUT DOWN

Company, Department:

Date of Report: Time: Telephone No:

Name and Identification of Unit Involved:

Time Incident Occurred:

Starting time of scheduled corrections:

Cause and Description of Breakdown, Detailed:

Corrective action taken/proposed:

Estimated excess pollutant discharge:

Pollutant	Excess lb/hr	Process Production rate t/hr

If Telephone call:

Person taking call:

Inspector:

Supervisor:

Date Entered in Record:

Figure 17. Example AOC report form.

6.0 TABULATED SUMMARY OF AOC

Table 9 summarizes the AOC's described herein. The identification of an AOC carries no implication whatsoever concerning liability for resulting air or water pollution. Liability for an AOC can only be determined by the enforcement officer responsible for a given set of regulations (NSPS, SIP) or permit requirements (NPDES, special conditions, etc.).

TABLE 9. BLAST FURNACE ABNORMAL OPERATING CONDITIONS

Abnormal Operating Condition	Cause	Effect on Process	Corrective Action	Frequency	Duration	Environmental Effects	Comments, Reference
			PROCESS RELATED -- STARTUP				
Initial slag is limey	Needed to coat hearth & bosh walls to avoid breakouts	Reduces openings in brickwork	Run w/less basic slags after 4 days	Once in 3-4 yrs/furnace	2-4 days, Bleeders open 12-24 hours	Heavy white smoke from limey slag--generally small casts	
Dirty gas bleeders	To vent furnaces at startup		Close bleeder & put gas into mains when gas conditions warrant	Once in 3-4 yrs/furnace	12-24 hrs. normally. Documented up to 336 hrs.	Dirty gas discharge to atmosphere	Some plants open large bell as well, 31
Blowing out through tap hole	Open tap hole	Heats furnace hearth	Close tap hole when iron appears at hole	Once in 3-4 yrs/furnace	12-48 hrs.	Gas ignited, dust into cast house	Less emission with Burfee pipe, 23
Extended start-up	Electrical & mechanical failures		Check out equipment before blowing--keep mtn. crews available	1/day during startup	1-4 hrs.	Extended emissions to atmosphere	
Excess slips	Hotter than usual furnace		Use properly screened burden--don't overblow. Low blast temperature	0-2/day during startup	15 secs.	Gas & particulates to the atmosphere	
			PROCESS RELATED -- SHUT DOWN				
Blow tap hole hard after last cast	Planned	Removes as much iron & slag as possible from furnace	Plug hole after all liquid removed	Once in 3-4 yrs/furnace	15-45 mins.	Dirty gas to cast house	
Blow dust catcher hard	Planned	Completely empty dust catcher	Steam & water sprays to suppress dust	6-15 times, 30 secs. each	3-7 1/2 mins/shut down	Dirty gas to atmosphere	Some plants use normal dust catcher routine
Bleeder valve open	Planned Power failure	Releases gas from furnace after ore blank or burden quench	Plug tuyeres & seal bosh	Once in 3-4 yrs/furnace	16-24 hrs., Power failure, 3-4 hrs.	Dirty gas to atmosphere	Emission reduced w/time, 26

TABLE 9. (cont'd)

Abnormal Operating Condition	Cause	Effect on Process	Corrective Action	Frequency	Duration	Environmental Effects	Comment Reference
Iron flush to ground	Planned	To empty salamander		Once in 3-4 yrs/ furnace. 6-8 yrs/if hearth goes more than 20 campaigns		Increased emissions of particulates	Practice common to all furnaces
PROCESS RELATED -- ABNORMAL OPERATING CONDITIONS							
Severe burden slip	Rapid movement of burden	Bleeder opens to relieve excessive top pressure	Reduce wind momentarily to settle burden (short-term). Improve burden & operating practice (long-term)	1-50/month	5-30 secs.	28 to 276 lbs/slip (solid material)	Based on 30 ft. diameter furnace, 8
Backdrafting	Planned--to make furnace repairs, esp. tuyeres	Gas flow to bustle pipe reversed	Complete repairs	4-50 times/month[2]	2 hrs.-7 days for large repair	Particulate emissions to atmopshere. Most emissions occur in first 15 mins. 8-12 g/Mg iron[4]	Delays for repairs 25-268 hrs/yr
Water & power failures	Failure of utility supply	Shut down, potential of breakouts & explosions	Provide emergency source of utilities & steam operated auxiliaries	Infrequent, 1/6 or more months	Up to several days--avg. 1-3 days	Increased emissions	Variable emissions
Breakouts	Failure of lining cooler, tuyere, etc.	Immediate shut down	Repair immediately	Once in 2 yrs.	1-30 mins.	Emission of gas & particulates	
Charging dusty material	Dry, dusty burden	Increase particulates in gas	Improve burden preparation of conditioning sprays for material	Up to 600 charges/ day average	5-10 secs.	Emissions of particulates	
Gases vented to air ahead of stove	Stove plugged	Loss of heat values	Clean stove	1/yr	1 hr/day for 21 days	Increased emissions	No data or est. avail.,24
Loss of ignition on gas bleeder	Plugged flue line, low gas pressure	None	Restor ignition	Up to one/month	1-4 hrs.	Clean gas bled to atmopshere	Amt. of gas bled varies

TABLE 9. (cont'd)

Abnormal Operating Condition	Cause	Effect on Process	Corrective Action	Frequency	Duration	Environmental Effects	Comment Reference
Formation of carbon black	Improper combustion of oil in tuyeres	Inefficient use of oil	Reduce flow of oil correct distribution	Variable	Variable, Persistent till corrected	Floating carbon black in clarifier	Dried carbon black may be blown to atm., 29, 30
Unplugging dust catcher	Buildup of solids	Interferes with gas cleaning	Poke out solids. Possibly use small explosive charge	1-8 times/yr.	1-8 hrs.	Emission of dirty gas	Can be avoided by reg. dumping & prevent condensation
			PROCESS RELATED -- "GRAY AREAS"				
Leaky top	Poor seal of small or large bell, or holes in bells	Loss of gas	Repair or replace bell. Change design of furnace top	Constant if both bells leak. 80 times/day if small, 600 times if large	Constant or 5-10 secs./occurrence	Discharge of gas & particulates Dust - 300 g/Mg CO - 16.5 kg/Mg H_2 - 40 g/Mg	
CASTING EMISSIONS[3]							
Slow cast	Small tap hole, limey slag	Delays cast, lost production	Proper tap hole openings & slag chemistry	1-5/week	10-60 mins. excess time on cast	Increased emissions proportional to longer tap time	
Cold metal	Low silica, high sulfur	Incorrect iron chemistry	Better operating practice	1-2/week		Increased emissions of kish	
Hot, limey slag	Improper slag chemistry	High coke rate	Lean out slag	2-7/week	15-45 mins.	White fumes from slag. Excess sulfur fumes	25
Wet tap hole, trough, or runner	Improper drying	Possible explosions	Thorough drying	Should be rare once in 3 months	5-20 mins.	Emissions from iron, sand, slag	

TABLE 9. (cont'd)

Abnormal Operating Condition	Cause	Effect on Process	Corrective Action	Frequency	Duration	Environmental Effects	Comment Reference
Tap hole enlarging during cast	Erosion of tap hole	Iron flow increases	Use of anhydrous clay will retain shape of hole better than water based clay	4 times/day	20-45 mins.	Excessive blowing of dirty gas at tap hole	Very long holes using anhydrous clay may extend cast causing increased emissions
CONTROL EQUIPMENT RELATED -- ABNORMAL OPERATING CONDITIONS							
Scrubber problems		Bleeders opened to allow large bell to close	Institute repairs	3-4 times/yr	0.2-48 hrs.	Raw dirty gas from bleeders 5-10 secs. 80 times/day 42 kg/Mg hot metal	
	Plugged nozzles & worn internals	Loss of gas cleaning efficiency	Institute repairs	Infrequent in well designed scrubber	Continuous until repaired	Minimal if repairs instituted immed.	
Loss of water pump	Worn impeller, leaky seal, plugged inlet	System imbalance	Provide standby unit make repairs	1-6/month	Variable. Depends on availability of standby unit	Increased solids in blowdown & increased blowdown	Discharge to terminal treatment may avoid AOC, 31
Clarifier rake failure	Jammed rake	Shut down of clarifier	Clean out clarifier. Prevent entrance of coarse particulates	0-2 times/yr	Variable, 1-3 days	Increased solids in blowdown & increased blowdown	Discharge to terminal treatment may avoid Env. effects, 28, 30

TABLE 9. (cont'd)

Abnormal Operating Condition	Cause	Effect on Process	Corrective Action	Frequency	Duration	Environmental Effects	Comment Reference
WATER QUALITY PROBLEMS							
High or low pH	Failure of controls	High pH causes scaling. Low pH	Improve pH control	0-6 times/yr normal. 15 times/yr recorded	Variable, 1.5 hr is typical	Exceed discharge limits	Frequent sampling may anticipate problem. 32
High TSS discharge	Spills in cleaning thickener, broken lines, etc.	None	Avoid spills				

1. Many furnaces on good burdens, especially newer ones with high top pressures, rarely have slips. Furnace prone to slipping may slip 5-50 times/month.[8]
2. Depends on age and condition of furnace.
3. Installation of control equipment for the cast house will essentially avoid abnormal emissions from casting.
4. Estimated.

7.0 REFERENCES

1. Hasegawa, Akira, "Large Blast Furnace Facilities in Nippon Steel Corporation," Ironmaking Proceedings, 36, 137 (1977).
2. Legille, E. and K. H. Peters, "Operation of a Blast Furnace Incorporating a Paul Wurth Bell-Less Top Charging System and its Application to Large Blast Furnaces," Proceedings of the 32nd Ironmaking Conference, 32, (1973).
3. Jablin, R., "Expanding Blast Furnace Slag Without Air Pollution," Journal Air Pollution Control Association, 22(3), March 1972.
4. Steiner, B., "Air Pollution Control," International Metal Reviews, September 1976.
5. White, Douglas, "Blast Furnace Water Recirculation System at Inland Steel Co.," Ironmaking Proceedings, 36, 44 (1977).
6. Parle, R. W., "Long-Term Shutdown and Subsequent Recovery of Blast Furnace Plant," Journal of the Institute of Fuel, June 1972.
7. G. K. Jefferson, "Operating Experience of No. 13 Blast Furnace, Gary Works, U. S. Steel Corporation," Ironmaking Proceedings, 36, 162 (1977).
8. Mobley, C.E., A. D. Hoffman, and H. W. Lownie, "Blast Furnace Slips and Accompanying Emissions as an Air Pollution Source," EPA-600/2-76-268.
9. Wagstaff, J. B., "A Report on Solid Movement on Blast Furnace Models," Proceedings Blast Furnace, Coke Oven and Raw Materials Committee, AIME, 14, 1955.
10. Lambert, C., "Operation of Geneva Works Blast Furnaces with High Alkali-Bearing Burdens," Ironmaking Proceedings, 35, 324 (1976).
11. Nanne, S. E., "Operating Experiences on Algoma's #7 Blast Furnace," Ironmaking Proceedings, 35, 1976.
12. James, T. E., "Cooling Hazards in High Tonnage Hearths," Ironmaking Proceedings, 35, 241 (1976).
13. Ziegert, W. L., "Blast Furnace Control at Inland Steel's Nos. 5 and 6 Blast Furnaces," Ironmaking Proceedings, 36, 298 (1977).
14. Touzalin, R. E., "Pollution Control of Blast Furnace Gas Scrubbers Through Recirculation," EPA/NTIS PB-250-435, July 1974.
15. Weinberg, W. H., "Blast Furnace Recycle Water System," Ironmaking Proceedings, 36, 50 (1977).

16. Bischoff Environmental Systems, "Gas Cleaning with Variable Annular-Gap Scrubbers," Catalogue.

17. Farrow, T. A., "Gary Works No. 13 Blast Furnace Recycle Water Systems," Ironmaking Proceedings, 36, 40 (1977).

18. Battelle Columbus Laboratories, "Potential for Energy Conservation in the Steel Industry," PB-244-097, pages V-67 and V-68.

19. Marks, L. S., Mechanical Engineer's Handbook, 5th Edition, p. 786.

20. McGannon, The Making, Shaping & Treating of Steel, 9th Edition, p. 457.

21. Greenawald, R. A. and E. L. Auslander, "Burns Harbor High Top Pressure Operation - Its Problems and Rewards," Ironmaking Proceedings, 33, 167 (1974).

22. Op. Cit., Reference 7.

23. Lindau, Lars and Lars Hansson, "Fugitive Dust from Steel Works," The National Swedish Environment Protection Board, Bo Mansson, Stoft Tekniska Laboratoriet AB, Sweden.

24. EPA, Effluent Guidelines.

25. Communication with Bruce Miller, EPA Region IV, Atlanta, Ga., February 2, 1977.

26. Trip Report, City of Cleveland Division of Air Pollution Control, January 25, 1977.

27. Trip Report, U.S. Steel, April 21-22, 1977.

28. Trip Report, Republic Steel, Gadsden, Alabama, July 6-7, 1977.

29. Trip Report, Inland Steel, East Chicago, Indiana, April 19-20, 1977.

30. Trip Report, Jones and Laughlin Steel, Cleveland, Ohio, August 2-3, 1977.

31. Trip Report, Erie County Department of Environmental Quality, Buffalo, N. Y., June 30, 1977.

32. Data supplied by EPA, Region III.

TECHNICAL REPORT DATA
(Please read Instructions on the reverse before completing)

1. REPORT NO. EPA-600/2-78-118c	2.	3. RECIPIENT'S ACCESSION NO.
4. TITLE AND SUBTITLE Pollution Effects of Abnormal Operations in Iron and Steel Making - Volume III. Blast Furnace Ironmaking, Manual of Practice		5. REPORT DATE June 1978
		6. PERFORMING ORGANIZATION CODE
7. AUTHOR(S) R. Jablin, D.W. Coy, B.H. Carpenter, and D.W. VanOsdell		8. PERFORMING ORGANIZATION REPORT NO.
9. PERFORMING ORGANIZATION NAME AND ADDRESS Research Triangle Institute P.O. Box 12194 Research Triangle Park, North Carolina 27709		10. PROGRAM ELEMENT NO. 1AB604
		11. CONTRACT/GRANT NO. 68-02-2186
12. SPONSORING AGENCY NAME AND ADDRESS EPA, Office of Research and Development Industrial Environmental Research Laboratory Research Triangle Park, NC 27711		13. TYPE OF REPORT AND PERIOD COVERED Final; 10/76-1/78
		14. SPONSORING AGENCY CODE EPA/600/13

15. SUPPLEMENTARY NOTES IERL-RTP project officer is Robert V. Hendriks, Mail Drop 62, 919/541-2733.

16. ABSTRACT The report is one in a six-volume series considering abnormal operating conditions (AOCs) in the primary section (sintering, blast furnace ironmaking, open hearth, electric furnace, and basic oxygen steelmaking) of an integrated iron and steel plant. Pollution standards, generally based on controlling discharges during normal (steady-state) operation of a process and control system, are often exceeded during upsets in operation. Such periods of abnormal operation are becoming recognized as contributing to excess air emissions and water discharges. In general, an AOC includes process and control equipment startup and shutdown, substantial variations in operating practice and process variables, and outages for maintenance. The purpose of this volume, which covers the blast furnace ironmaking process, is to alert those who deal with environmental problems on a day-to-day basis to the potential problems caused by AOCs, to assist in determining the extent of the problems in a specific plant, and to help evaluate efforts to reduce or eliminate the problems. The report enumerates as many AOCs as possible, with emphasis on those which have the most severe environmental impact. Descriptions include flow diagrams, material balances, operating procedures, and conditions representing typical process configurations.

17. KEY WORDS AND DOCUMENT ANALYSIS

a. DESCRIPTORS	b. IDENTIFIERS/OPEN ENDED TERMS	c. COSATI Field/Group
Pollution Shutdowns Iron and Steel Industry Blast Furnaces Abnormalities Failure Starting	Pollution Control Stationary Sources Abnormal Operations	13B 11F

18. DISTRIBUTION STATEMENT Unlimited	19. SECURITY CLASS (This Report) Unclassified	21. NO. OF PAGES 101
	20. SECURITY CLASS (This page) Unclassified	22. PRICE

EPA Form 2220-1 (9-73)