United States
Environmental Protection
Agency

Industrial Environmental Research
Laboratory
Cincinnati OH 45268

EPA-600/2-80-022
January 1980

Research and Development

Evaluation of Paul Bergsoe & Son Secondary Lead Smelter

RESEARCH REPORTING SERIES

Research reports of the Office of Research and Development, U.S. Environmental Protection Agency, have been grouped into nine series. These nine broad categories were established to facilitate further development and application of environmental technology. Elimination of traditional grouping was consciously planned to foster technology transfer and a maximum interface in related fields. The nine series are:

1. Environmental Health Effects Research
2. Environmental Protection Technology
3. Ecological Research
4. Environmental Monitoring
5. Socioeconomic Environmental Studies
6. Scientific and Technical Assessment Reports (STAR)
7. Interagency Energy-Environment Research and Development
8. "Special" Reports
9. Miscellaneous Reports

This report has been assigned to the ENVIRONMENTAL PROTECTION TECHNOLOGY series. This series describes research performed to develop and demonstrate instrumentation, equipment, and methodology to repair or prevent environmental degradation from point and non-point sources of pollution. This work provides the new or improved technology required for the control and treatment of pollution sources to meet environmental quality standards.

This document is available to the public through the National Technical Information Service, Springfield, Virginia 22161.

EPA-600/2-80-022
January 1980

EVALUATION OF PAUL BERGSOE & SON SECONDARY LEAD SMELTER

by

Richard T. Coleman, Jr. and Robert Vandervort
Radian Corporation
Austin, Texas 78766

Interagency Agreement No. 78-D-X0309

Project Officers

James A. Gideon
Division of Physical Science and Engineering
National Institute for Occupational Safety and Health
Cincinnati, Ohio 45226

Alfred B. Craig, Jr
Metals and Inorganic Chemicals Branch
Industrial Environmental Research Laboratory
Cincinnati, Ohio 45268

INDUSTRIAL ENVIRONMENTAL RESEARCH LABORATORY
OFFICE OF RESEARCH AND DEVELOPMENT
U.S. ENVIRONMENTAL PROTECTION AGENCY
CINCINNATI, OHIO 45268

DISCLAIMER

This report has been reviewed by the National Institute for Occupational Safety and Health (NIOSH) and the U.S. Environmental Protection Agency (EPA), and approved for publication. Approval does not signify that the contents necessarily reflect the views and policies of these agencies nor does mention of trade names or commercial products constitute endorsement or recommendation for use.

FOREWORD

When energy and material resources are extracted, processed, converted, and used, the impacts on occupational and environmental health often require that new and increasingly more efficient control methods be used. The Division of Physical Science and Engineering of NIOSH and the Industrial Environmental Research Laboratory - Cincinnati (IERL-Ci) of EPA assist in developing and demonstrating new and improved methodologies that will meet these needs both efficiently and economically.

This report presents the findings of an investigation performed to obtain data concerning fugitive and workroom emissions from secondary lead smelters. The results are being used within both NIOSH and EPA as part of a larger effort to define the potential workplace/environmental impact of emissions from this industry segment and the need for improved controls. The findings will also be useful to other agencies and the industry in dealing with control problems. Either the Metals and Inorganic Chemicals Branch of the USEPA or the Division of Physical Science and Engineering of NIOSH should be contacted for any additional information desired concerning this program.

David G. Stephan
Director
Industrial Environmental Research Laboratory
Cincinnati

Walter Haag
Director
Division of Physical Science and Engineering
NIOSH
Cincinnati

ABSTRACT

The present report presents the results of an interagency study of the SB battery smelting furnace. The study was conducted by Radian Corp., Austin, Texas, under contract to the National Institute for Occupational Safety and Health (NIOSH) and the Environmental Protection Agency (EPA). The study was performed at the Paul Bergsoe and Son secondary lead smelter in Glostrup, Denmark in September, 1978.

During the test period, the smelter feed materials consisted of approximately 12.6 percent(w) polyproplyene case and 12.6 percent (w) hard rubber case whole batteries. The remainder of the lead bearing feed materials were crushed battery plates and a small amount of lead scrap. The average production rate for the test period was 70.5 metric tons of lead per day.

The tests conducted indicated that the controlled stack emissions were as follows:

- Lead - 0.046 to 0.056 kg/hr
- Antimony - 0.52 to 0.54 kg/hr
- Arsenic - 0.0005 to 0.0013 kg/hr
- Chlorine - 1.6 to 7.1 kg/hr
- Sulfur - 6.9 to 9.1 kg/hr

Employee exposures were maintained below 100 $\mu g/m^3$ in all areas of the smelter. This low exposure is due to the exemplary engineering and work practice controls. Yard sprinkling, washdown procedures, and good general housekeeping efforts also helped reduce the levels of lead in and around the workplace.

CONTENTS

Page

Disclaimer..... ii
Foreword..... iii
Abstract..... iv
Figures.....viii
Tables..... x
Conversion Chart..... xii
Acknowledgments.....xiii

1. Introduction..... 1

2. Plant Description..... 2
   SB battery smelting furnace..... 2
     Furnace operation..... 5
     Furnace charging..... 6
     Operating parameters..... 7
   Flash agglomeration furnace 8
   Plant layout..... 10

3. Summary of Results..... 14

4. Source Characterization..... 18
   Smelter operating conditions..... 18
     Feed characteristics..... 18
     Energy consumption..... 20
     Production data..... 20
     Furnace operation..... 22
   High volume air monitoring..... 22
   Stack sampling..... 24
     Description of sampling locations..... 24
     EPA Method 5 26
     Wet electrostatic precipitator (WEP)..... 30
     Stack emission factors..... 33
   Material flow..... 34
     Feed characterization..... 34
     Product samples..... 35
     Elemental partitioning..... 36

CONTENTS (Continued)

Page

5. Control Technology Assessment..... 37
Description of equipment and controls..... 37
Receipt of raw materials..... 37
Charge storage and preparation..... 37
SB furnace charging facilities..... 39
SB furnace operating area..... 39
SB furnace integrated ventilation system..... 43
Flue dust handling..... 45
Description of emission sources and potential exposure..... 45
Materials handling emissions..... 45
Charging emissions..... 48
Slag tapping..... 48
Tuyere punching..... 49
Finished metal tapping..... 49
Afterburner slag port..... 51
Agglomeration furnaces..... 51
Baghouse bag replacement..... 51
Engineering control evaluation..... 51
Raw materials handling..... 52
SB furnace integrated ventilation system..... 55
SB furnace charging hood (Hood I)..... 58
Slag tapping hoods (Hoods A,B,C,D)..... 58
Secondary slag tapping hoods (Hoods E and F)..... 62
Finished metal tapping hood (Hood G)..... 62
Finished metal ladle cooling hood (Hood H)..... 65
Agglomeration furnace ladle hood (Hoods J and K)..... 68
Other industrial hygiene considerations..... 68
Employee work schedules..... 68
Personal protective equipment..... 68
Employee hygiene..... 69
Biological monitoring..... 69
Workplace air monitoring..... 69
Noise level measurements..... 69
Control critique..... 69

6. Other Process and Controls..... 73
Rotary furnace smelting..... 73
Description of equipment and controls..... 73
Description of emission sources and potential exposures..... 78
Engineering control evaluation..... 81
Other industrial hygiene considerations..... 89
Control critique..... 89

CONTENTS (Continued)

Page

Pot induction furnace..... 91
Description of equipment and controls..... 91
Description of emission sources and potential exposures..... 91
Engineering control evaluation..... 93
Control critique..... 93

Appendix. Blood/Lead Data Supplied by Bergsøe Management..... 94

FIGURES

Number		Page
1	General process flowsheet for the secondary lead smelter industry	3
2	Whole battery smelter furnace and flue gas treatment system	4
3	Flash agglomeration furnace	9
4	Plot plan	11
5	Stack cross-section	25
6	EPA 5 sampling train	27
7	Schematic of the integral WEP sampling train	31
8	Wet electrostatic precipitator	32
9	Overview of SB furnace building and charge storage and preparation building	38
10	Furnace charging hood (Hood I)	40
11	Key to local exhaust ventilation hoods associated with SB furnace and agglomeration furnaces	41
12	SB furnace ground level work area, SB furnace building	42
13	Overview of exhaust ventilation controls for the tapping of slag and finished metal	44
14	Agglomeration furnace and ladle hood (Hoods J and K)	46
15	Detail of slag tap hole plug and tuyere design	49
16	Key to ventilation system test points	56
17	Face velocity measurements - furnace charging hood (Hood I)	60
18	Side elevation - slag tapping hood (Hoods A,B,C,D)	61

FIGURES (Continued)

Number		Page
19	Front elevation - slag tapping ladle (Hoods A,B,C,D)	63
20	Secondary slag tapping hood (Hoods E and F)	64
21	Front elevation of finished metal tapping hood (Hood G)	66
22	Finished metal ladle cooling hood (Hood H)	67
23	Rotary furnace smelting and charge storage and preparation building	74
24	Close-up of charge container resting deck, roll-up door, and detail of charge container	76
25	Rotary furnace charging and tapping controls	77
26	Overview of rotary furnace ventilation controls and key to ventilation system test points	84
27	Finished metal ladle cooling hood	88
28	Pot induction furnace hood	92

PLATES

1		12
2		12
3		13
4		13

TABLES

Number		Page
1	Typical Feed Makeup for SB Smelting Furnace Charge	6
2	Approximate Elemental Distribution in Smelter Exit Streams	15
3	Stack Emissions Determined Using WEP Train	16
4	Typical Charge Materials During the Test Period	19
5	Reported Furnace Feed Data for the Test Week	20
6	Energy Consumption Data	21
7	Reported Production Data for the Week of September 24, 1978	21
8	Reported Production Data for a 91-Day Campaign	21
9	Operating Parameters Recorded During the Characterization Tests	23
10	Hi-Vol Area Sampling Results	24
11	Traverse Points Measured from the Inside Wall at the Sampling Port	26
12	EPA Method 5 Results	28
13	Lead Particulate Emissions Test Results	29
14	Gaseous Sulfur and Chlorine Emission Test Results	29
15	Total Lead, Arsenic, and Antimony Emission Test Results	33
16	Stack Emission Factors for the SB Battery Smelting Furnace	34
17	Average Feed Material Composition	35
18	Product Stream Analyses	36
19	Elemental Partitioning in the SB Smelting Furnace	36
20	Breathing Zone, Lead-in-Air Concentrations Associated with SB Furnace Operations	53

TABLES (Continued)

Number		Page
21	Work Area Lead-in-Air Concentrations Associated with Operation of the SB Furnace	54
22	Results of Tests in SB Furnace and Agglomeration Furnaces Ventilation Systems	57
23	Work Area Arsenic-in-Air Concentrations Associated with Operation of SB Furnace	59
24	Results of Noise Measurements Made in Association with SB Furnace Operations	70
25	Lead and Antimony-in-Air Concentrations Associated with Rotary Furnace Operations	82
26	Results of Tests in Rotary Furnace Ventilation System	85
27	Results of Noise Measurements Made in Association with Rotary Furnace Operations	90

CONVERSION CHART

To convert from	To	Multiply by
British thermal unit (Btu, International Table)	joule(j)	1.0550559 E + 03
Btu/hour	watt(W)	2.9307107 E - 01
Btu/second	watt(W)	1.0550559 E + 03
Btu/ft^2-hr-deg F (heat transfer coefficient)	joule/meter^2-second-kelvin(J/m^2•s•K)	5.6782633 E + 00
Btu/ft^2-hour (heat flux)	joule/meter^2-second(J/m^2•s)	3.1545907 E + 00
Btu/ft-hr-deg F (thermal conductivity)	joule/meter-second-kelvin(J/m•s•K)	1.7307347 E + 00
degree Fahrenheit (°F)	kelvin(K)	$t_K = (t_F + 459.67)/1.8$
degree Rankine (°R)	kelvin(K)	$t_K = t_R/1.8$
foot	meter(m)	3.0480000* E - 01
foot^2	meter^2(m^2)	9.2903040* E - 02
foot/second^2	meter/second^2(m/s^2)	3.0480000* E - 01
foot^2/hour	meter^2/second(m^2/s)	2.5806400* E - 05
foot^2/second	meter^2/second(m^2/s)	9.2903040* E - 02
foot^3	meter^3(m^3)	2.8316847 E - 02
gallon (U.S. liquid)	meter^3(m^3)	3.7854118 E - 03
horsepower (550 ft•lbf/s)	watt(W)	7.4569987 E + 02
inch	meter(m)	2.5400000* E - 02
inch of mercury(60°F)	pascal(Pa)	3.37685 E + 03
inch of water(60°F)	pascal(Pa)	2.48843 E + 02
inch^2	meter^2(m^2)	6.4516000* E - 04
inch^3	meter^3(m^3)	1.6387064* E - 05
kilocalorie	joule(J)	4.1868000* E + 03
kilogram-force(kgf)	newton(N)	9.8066500* E + 00
psi	pascal(Pa)	6.8947573 E + 03
ton (short,2000 lbm)	kilogram(kg)	9.0718474* E + 02
watt-hour	joule(J)	3.6000000* E + 03

ACKNOWLEDGMENTS

The authors would like to thank the Bergsøe management and workers who were most cooperative during this study. We would also like to thank Dr. Thomas Mackey for his help in arranging our meeting in Denmark.

We would also like to commend the members of the sampling and analytical team who helped perform this characterization study. Special thanks to:

Michael R. Fuchs
Lawrence J. Holcombe
C. William Arnold
Robert M. Mann
Barbara J. Bolding
David J. Burton
Jay R. Hoover
Guy M. Crawford
Cheryl M. Carter
David A. Hayes

SECTION 1

INTRODUCTION

As part of an interagency effort, the Control Technology Assessment Branch of NIOSH and the Metals and Inorganic Chemicals Branch of EPA have performed a characterization of new secondary lead smelting technology. The processes characterized offer potential solutions to major occupational and environmental problems associated with secondary crude lead production. Two major processes were studied: special battery (SB) smelting and flash agglomeration of flue dust. The study was performed at the Paul Bergsoe and Son smelter in Glostrup, Denmark.

This study provided both EPA and NIOSH an opportunity to cooperate on a test program where measurements of both stack and workplace/fugitive emissions were made. Fugitive emission rates were not measured directly in this study. However, the concept of using workplace lead-in-air levels as one measure of fugitive emission control effectiveness while recording process variables and stack emission data may help in future efforts to protect both the workers and the environment. Changes in a process variable or a stack emission rate may serve as a useful indicator that a particular agent may present a workplace contamination problem. This study developed a coordinated, combined EPA/NIOSH test procedure for process characterizations. Future test programs may expand on this one to include direct measurements of fugitive emission rates and fugitive emission control efficiency.

In Section 2.0, a description of the SB battery smelting furnace is presented. Section 3.0 is a summary of the major results of the study. Section 4.0 presents the detailed results of the source characterization tests. Section 5.0 discusses the results of the control technology assessment. Section 6.0 presents additional results gathered for the control technology assessment. The rotary furnaces and electric induction furnace were evaluated in this part of the study.

SECTION 2

PLANT DESCRIPTION

Secondary lead smelting involves three major operations: scrap pretreatment, smelting, and refining. Figure 1 outlines the material flow in a typical secondary lead smelter and lists the major processes, raw materials, and products. SB smelting is an important process because it eliminates the battery decasing step when whole batteries comprise a portion of the furnace charge. During the test period, whole batteries comprised 40 percent of the lead-bearing charge. In addition, since flue dust agglomeration is an integral part of the SB smelter, a major part of the smelter fugitive dust emissions are eliminated. It is important to note, however, that SB smelting alone is applicable only for the production of crude lead. Additional refining processes are required to produce soft lead, lead oxide, or lead alloys.

SB smelting incorporates both environmental emission control and occupational health features in its design. Plant layout, raw material storage and handling, process and hygiene ventilation, housekeeping, process control, and flue dust agglomeration are all included in the smelter design. Also, the SB furnace is operated at conditions producing minimum emissions. This approach has been implemented by Paul Bergsoe and Son A/S of Glostrup, Denmark where environmental and occupational health regulations forced modernization of their lead smelter.

SB BATTERY SMELTING FURNACE

The SB battery smelting shaft furnace has a rectangular cross section unlike most cylindrical secondary lead blast furnaces used in the United States. The construction is similar to a primary lead blast furnace. Figure 2 is a diagram of the furnace and associated gas treatment system. The furnace is constructed so as to isolate the charging floor from the bottom of the furnace. Additionally, the raw material storage and handling area is isolated in an enclosed building. Thus, only the front-end loader operator charging the furnace works in a "dirty" area. The front-end loader does have a filtered air supply. In addition, the top of the blast furnace is provided with local exhaust ventilation to minimize fugitive emissions.

At the bottom of the furnace, local exhaust ventilation is provided for the four slag taps and the lead ladles. There are two rows of tuyeres, one on either side of the furance, designed to use air preheated to 500°C. The tuyeres have special covers which minimize emissions during punching.

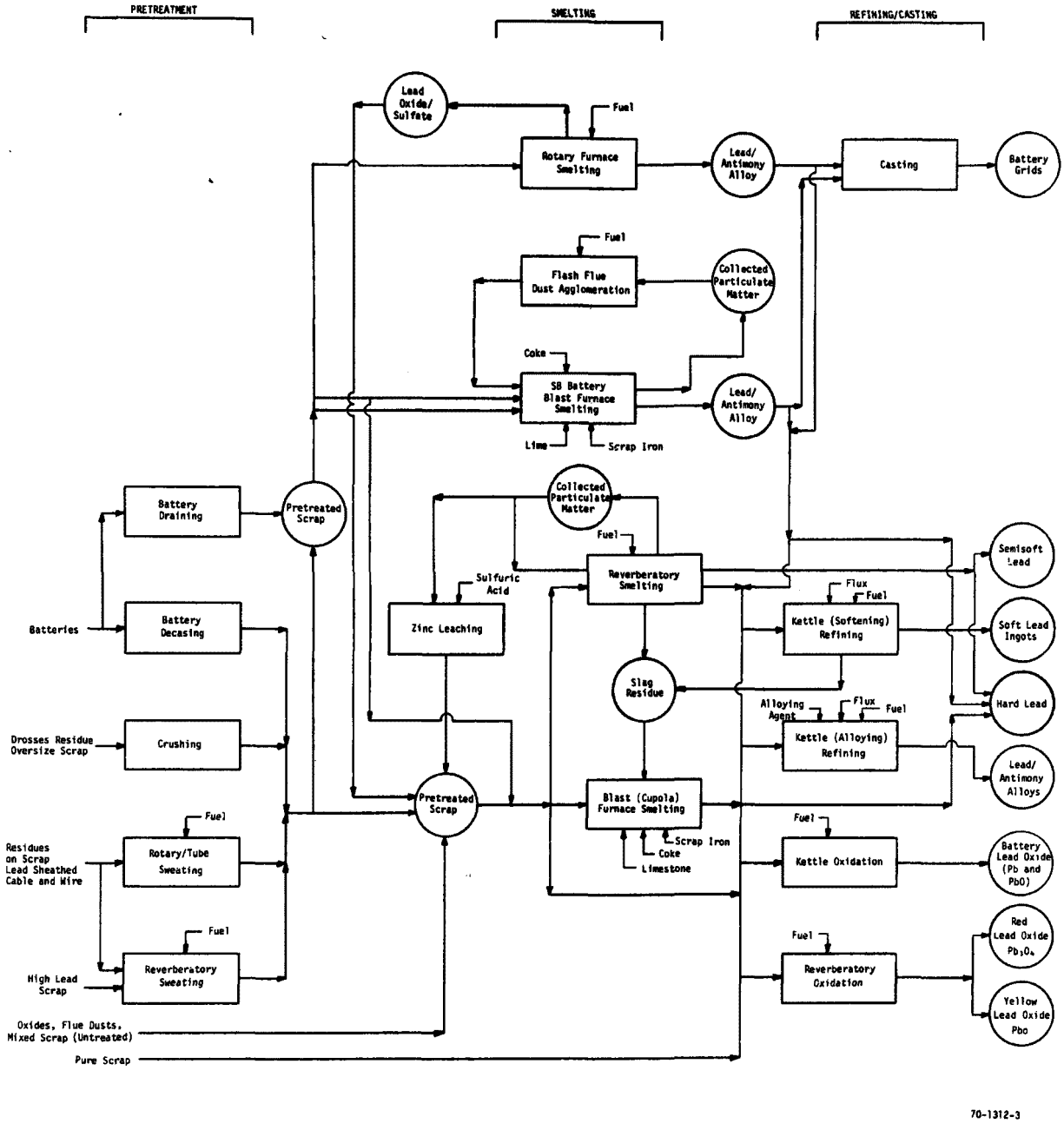

Figure 1. General process flowsheet for the secondary lead smelting industry.

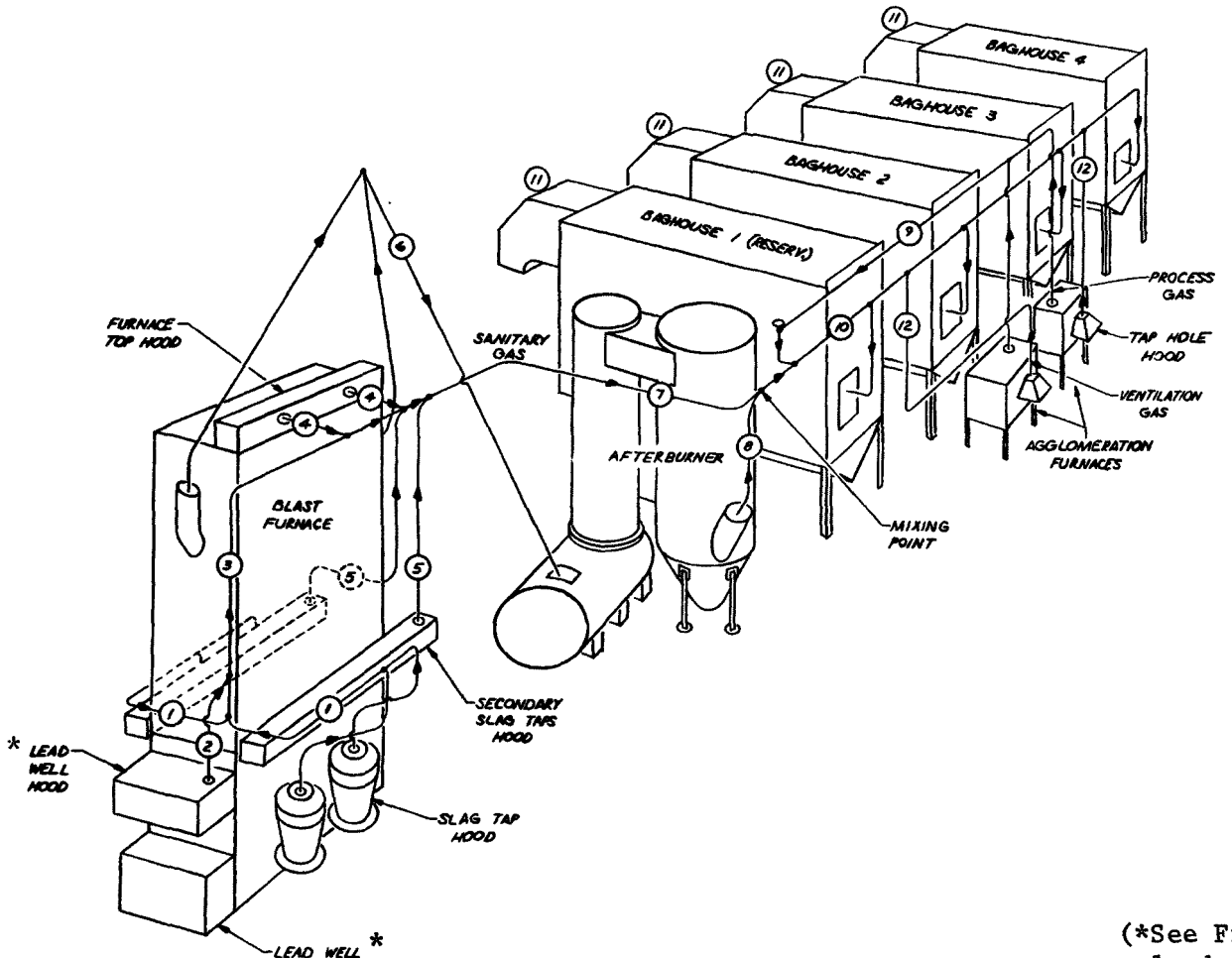

STREAM No.	STREAM NAME
1	SLAG TAP VENT
2	LEAD WELL VENT
3	(1)+(2)
4	FURNACE TOP SANITARY VENT
5	SEC. SLAG TAP VENT
6	PROCESS GAS
7	(3)+(4)
8	AFTERBURNER OFF GAS
9	AGGLOMERATION FURNACES GAS
10	(8)+(9)
11	COMBINED EXIT GAS
12	AGGLOMERATION FURNACES VENT

02-2529-4

(*See Figure 13 for new lead well arrangement)

Figure 2. Whole battery smelter furnace and flue gas treatment system.

The local exhaust ventilation air and process flue gases are mixed and all gases pass to four baghouses (at 100-125°C). The baghouses are a Swedish design using felted polyester cloth. The dust is collected on the outside of the bag and only a mild cleaning air stream is required to dislodge the dust. This reportedly gives the bags a longer life. The baghouses were designed to operate with three running and one spare. During the test period, all four were running. The air-to-cloth ratio with four baghouses operating is 34.5 $m^3/hr/m^2$ (1.88 $ft^3/min/ft^2$). The effective cloth area is 4720 m^2 for four baghouses. Typical pressure drop across the baghouse is 150 mm (∿6 inches) water gauge.

The collected dust is conveyed in an enclosed screw conveyor system to one of two small flash agglomeration furnaces. The flash agglomerator furnace is oil fired and consumes approximately 7.7 liters of oil per hour. In this patented process, the dust is melted, reducing its volume by about 80 percent. The agglomerated dust represents only 2 or 3 percent by weight of the furnace charge. This reduction in volume permits an increased throughput of raw material and increased production per square foot of furnace cross-section. Agglomerating the dust also reduces the dust load circulating in the gas cleaning system because the agglomerated dust is not entrained from the top of the furnace.

The smelter area is paved and is wetted and swept periodically. This practice minimizes fugitive emissions normally caused by the wind blowing dry lead dust in the yard. This wash water is collected, combined with the acid drainage from cracked batteries stored in the yard, and is finally treated using a soda ash precipitation process. The treated effluent is discharged to the municipal wastewater treatment facility. The sludge is withdrawn approximately once every two weeks and is charged back to the furnace for additional recovery of metals.

The smelter is serviced by two additional sewer collection systems, one for rainfall and one for sanitary sewage. The rainfall collected is used as washdown water for the smelter yard. Additional makeup cooling water is obtained from the municipal water supply. This water is softened in an ion exchange unit before use. Sanitary sewage is discharged directly to the municipal collection system.

Furnace Operation

The operation of the SB furnace results in low stack and fugitive lead emission rates. The relatively low blast air rate (∿3500 Nm^3 air/hr)† and large furnace cross-sectional area (4.0 m^2 at the tuyeres) results in a low gas velocity. This combined with the low furnace top temperatures (∿100°C) and the absence of loose flue dust in the charge result in a low lead dust generation rate. The large furnace cross-section and small production rate allows the charge material to descend slowly through the furnace shaft.

† Nm^3 = normal cubic meters, 0°C, 760 mm Hg.

Thus the charge heats slowly and is not hot enough at the top of the furnace to generate lead fume.

This slow heating also prevents the rubber and polypropylene case material from "burning thru." Burn-thru could occur when the charge material is ignited throughout the furnace shaft rather than only in the smelting zone. This occurs more readily in the SB furnace than in conventional blast furnace because the rubber or polypropylene case material is present. It is therefore very important to control the furnace temperature both from an operating and an environmental viewpoint to reduce fuming at the charging port.

Furnace Charging

In order to help maintain constant temperature in the furnace, the feed is carefully bedded on the chargeroom floor. A layer of coke is spread on the floor first, followed by recycle slag, batteries, plates, scrap iron and other feed materials. By doing this, each bucket of material charged to the furnace contains roughly the right amount of coke. This practice maintains a homogeneous mixture of material in the furnace and helps avoid hot spots.

Each furnace charge during the test period contained roughly the same ratio of the materials shown in Table 1. A front end loader is used to spread the feed materials on the chargeroom floor. A large floor scale is used to weigh the front end loader with a full bucket. The measurement is fed to the mini-computer which monitors the smelter operations. The weight of the empty front end loader is subtracted and the charge weight is recorded. A very accurate measurement of the charge blend is possible using this technique, typically within 1 to 2 percent of the target on major components (batteries, plates, etc.) and within 4 to 5 percent on the minor components.

TABLE 1. TYPICAL FEED MAKEUP FOR SB SMELTING FURNACE CHARGE

Feed material	Approximate weight percent	Percent of lead bearing charge
Whole batteries		
-polypropylene case	12.6	20.0
-hard rubber case	12.6	20.0
Battery plates	31.5	50.0
Agglomerated dust } (or battery mud)	3.2	5.0
Drosses } (or battery mud)	3.2	5.0
Return slag	22.1	
Coke	5.7	
Scrap iron	1.9	
FeO (mill scale)	6.3	
$CaCO_3$	0.9	
Total	100.0	100.0

Operating Parameters

At present, the Bergsøe smelter does not have permission to dispose of the furnace slag in a landfill. As a result, the furnace is being operated in a slightly different fashion than it would if the slag could be dumped. At present, the furnace slag reportedly contains between 1.5 and 3 weight percent lead. The samples gathered during this study assayed approximately 0.55 weight percent lead. All of the slag is stockpiled and the portion with a high lead content is recycled to the furnace. When a dumping permit is obtained, additional $CaCO_3$ will be added to the charge to maintain the slag lead content below 2.0 weight percent.

Adding more $CaCO_3$ will raise the slag melting point and make control of the SiO_2/FeO ratio more important. In the past, accretions (freezing) at the tuyere level in the furnace have been a problem. In some of the early campaigns, large accretions of an iron-containing material had to be removed from the furnace. An analysis of similar accretions taken from the SB furnace constructed at Britannia Lead Co. in Gravesend, England showed that the following elements were present as expected: Al, Si, Pb, S, Ca, and Fe. However, the major crystalline species have not, as yet, been identified. Bergsøe operators appear to have eliminated the problem by reducing the iron feed to the furnace. Blast air oxygen enrichment was also added and reportedly helped eliminate the problem. The accretion problem is not expected to recur when additional $CaCO_3$ is added because of the reduction in iron content of the feed materials.

Scrap iron and mill scale (FeO) are added to the furnace so that a PbS-FeS matte forms between the lead bullion and slag in the furnace. Most of the sulfur input is trapped in this matte. At present, the matte is being stored on-site because of its high lead content ($\sim$8%). It must either be sold to a primary lead smelter or disposed of in a protected landfill. Recovery of the matte lead content at a secondary lead smelter is not possible because of the sulfur. Sulfur dioxide emission controls would be required for any furnace processing the matte. A primary lead smelter, however, could combine this material with the normal lead sulfide materials they process.

Oxygen enriched air is used in the SB furnace. Blast air is preheated to 500°C and then mixed with oxygen prior to entering the furnace. Preheating the air reduces the amount of coke required in the furnace and allows smaller blast air rates to be used. As mentioned earlier, this helps reduce dust generation in the furnace. Blast air pressure at the tuyeres ranges from 800 to 1200 mm H_2O. The blast air rate is typically between 3200 and 3700 Nm^3/hr with between 60 and 115 Nm^3/hr of oxygen added. These rates correspond to a production rate of between 62 and 74 metric tons Pb per day.

FLASH AGGLOMERATION FURNACE

The flue dust generated by smelting automobile batteries and battery manufacture scrap melts at approximately 400 to 900°C (750 to 1650°F). This low melting point makes flash agglomeration of flue dust possible. Dusts with higher melting points cannot be agglomerated using this technique without causing the low melting materials to volatilize. A special furnace was designed to take advantage of this property so that dust handling could be completely avoided.

At most secondary lead smelters, it is common practice to return flue dust directly to either the blast furnace or a reverberatory furnace. A considerable amount of this dust is entrained in the furnace flue gas system. Agglomerating the flue dust prevents entrainment, thus reducing the load on the baghouse and improving its performance.

The Bergsoe smelter has two agglomeration furnaces serving the four SB furnace baghouses. Figure 3 is a diagram of a flash agglomeration furnace. The agglomeration furnace is fed directly from the baghouse dust hoppers via screw conveyor. The dust drops onto the furnace hearth where it melts almost instantaneously upon contact with an impinging flame. The liquid runs down the sloping hearth, through a permanently open taphole and into a cast iron vessel where it solidifies. This completely eliminates handling of the dust, the associated occupational hazard, and fugitive emissions from flue dust storage piles provided that the agglomeratged dust is stored indoors.

Tipping the solidified contents of the cast iron vessels onto the floor is usually sufficient to break the material into lumps suitable for recharging to the blast furnace. It is simply mixed with coke and flux and loaded into the top of the blast furnace along with other charge materials.

Since the agglomeration furnace produces a product which is both greatly reduced in volume and which does not create a significant recycle of reentrained dust from the furnace to the baghouse, additional material can be charged to the furnace, thus increasing the smelting rate. This is one economic justification for the agglomeration furnace.

A contamination of the flue dust also takes place. Lead chloride forms as the polyvinyl chloride battery plate separators are smelted. Lead chloride is more volatile than other oxide materials in the furnace. Recirculating the flue dust causes lead chloride to preferentially volatilize in the furnace, further, increasing the chlorine content of the flue dust. Flue dust which has accumulated a large percentage of chlorine can be either leached to remove the chlorine, or used as a fluxing agent in another part of the smelter.

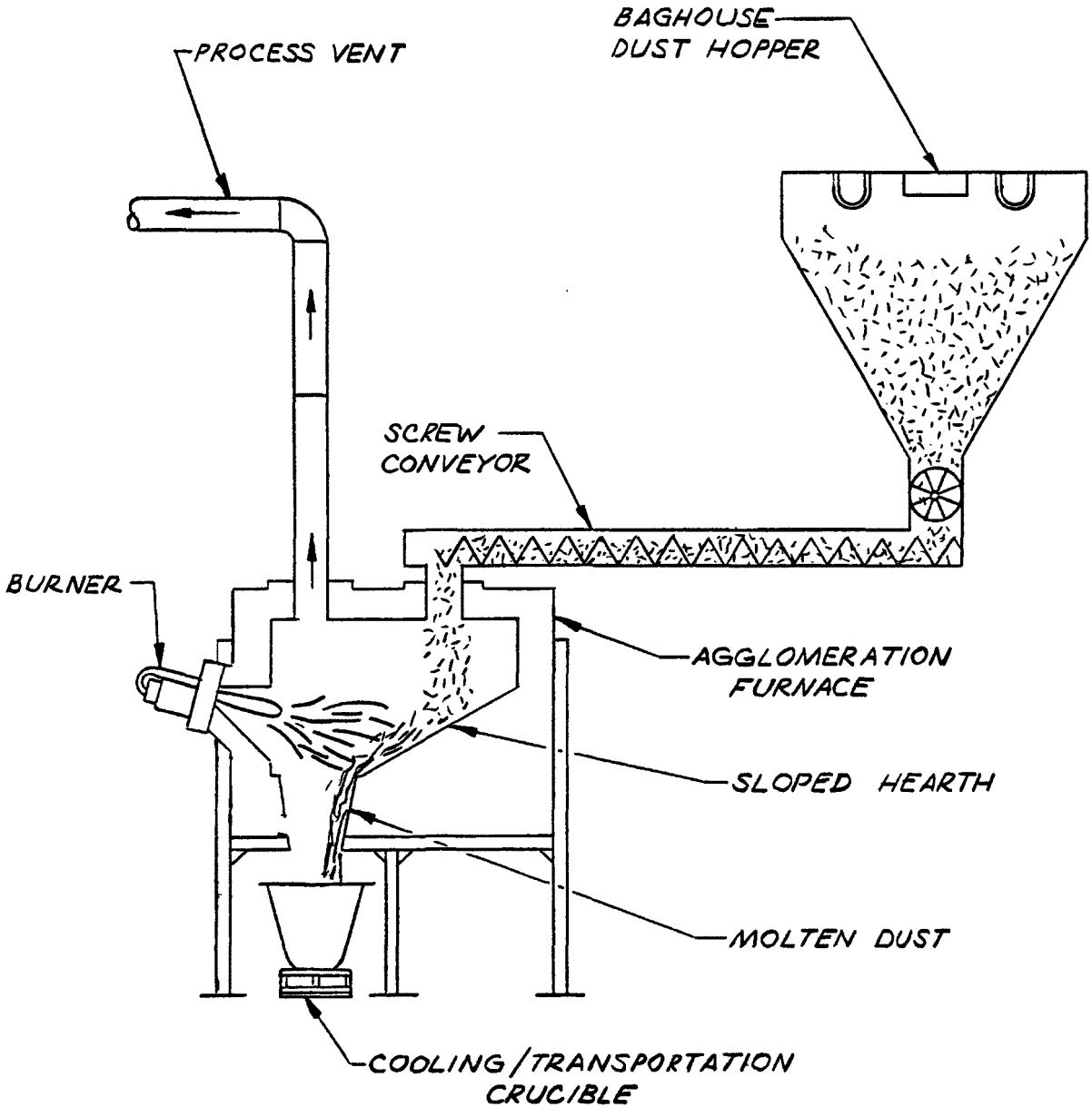

Figure 3. Flash agglomeration furnace.

0225281

PLANT LAYOUT

A plot plan of the new Bergsøe smelter is shown in Figure 4. The old lead smelter, the lead refinery, the small cast iron department, the copper department, and the other small smelting operations are located between 100 and 400 meters southwest of the new smelter. The old smelter was built in the 1930's. Construction on the new smelter began in 1973 and the initial startup occurred in 1975.

The SB furnace is located in the building labelled #1 on Figure 4. As mentioned earlier, the furnace building isolates the top of the furnace where the charging takes place from the work area on the first floor. Plate 1 shows the front end loader charging material to the furnace top. The large hood over the charge area captures emissions escaping the furnace top. Plate 2 is a view of the outside of the building looking east. The SB furnace building is on the left. The afterburner chamber can be seen between the building and the four large baghouses. The two small agglomeration furnaces are located in front of the baghouses. Plate 3 shows the tapping area on the first floor of the SB furnace building. Plate 4 is a view of the two agglomeration furnaces.

As shown in Figure 4, the SB furnace and the two short rotary furnaces located in Building #3 both discharge to a common stack. The rotary furnaces were not operating during the SB furnace test period.

Raw materials are stored in concrete bins in Building #2 in Figure 4. Building #2 also contains the charge bedding area. Building #2 is not large enough to contain all of the raw materials because of the irregular receipt of scrap material. As a result, several large piles of plates, unbroken batteries, and clean lead scrap are stored to the west of Buildings #1 and #2.

The small sodium carbonate water treatment plant is located between the old and new smelters to the south of Building #1. As can be seen in Figure 4, the smelter fenceline is 200 meters east southeast from the SB furnace building. This is the closest point from smelter to fenceline. The prevailing winds are from either the west or west northwest.

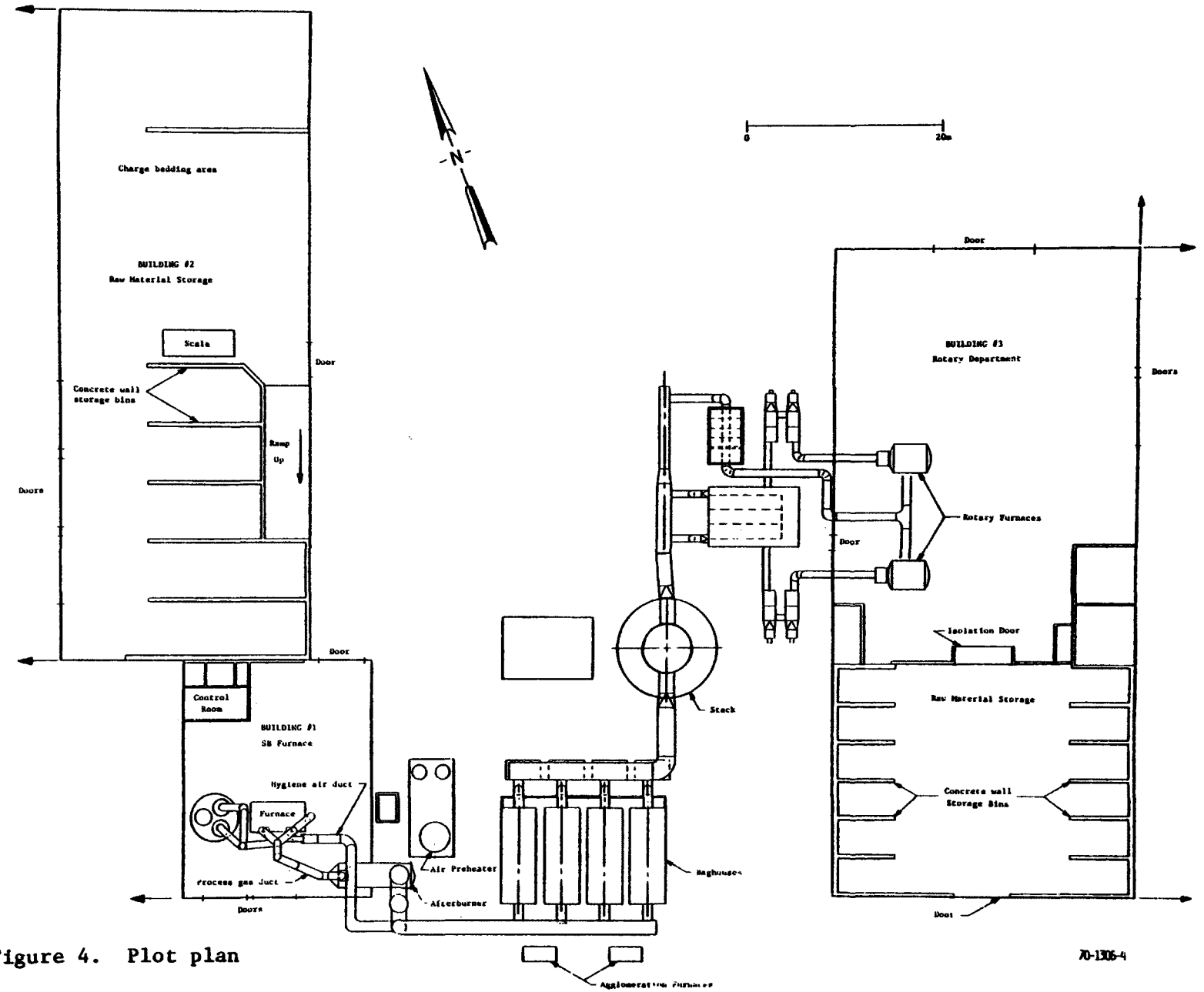

Figure 4. Plot plan

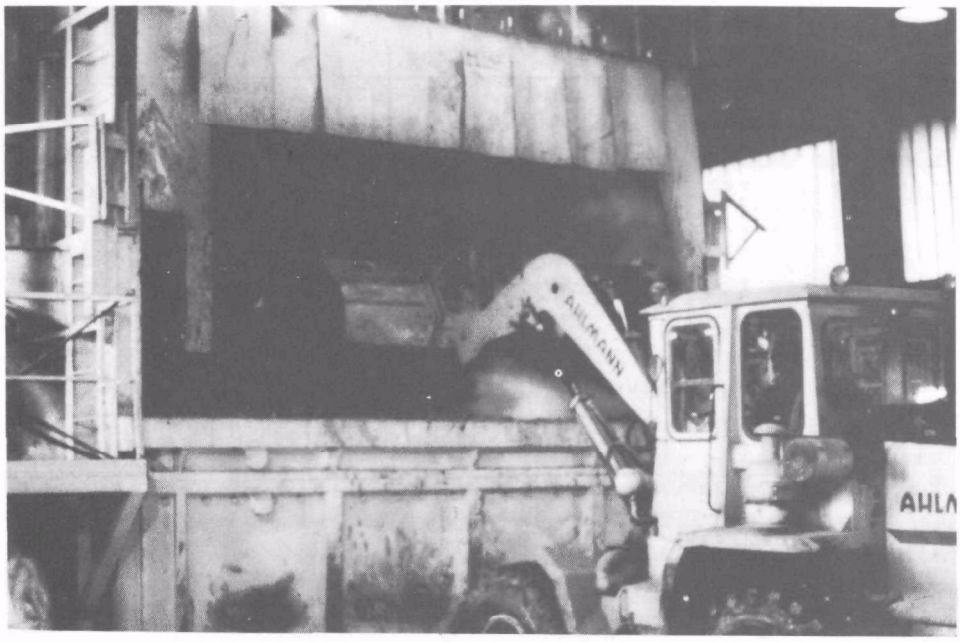

PLATE 1. Front end loader delivering charge to top of SB Furnace.

PLATE 2. View of smelter building and baghouse.

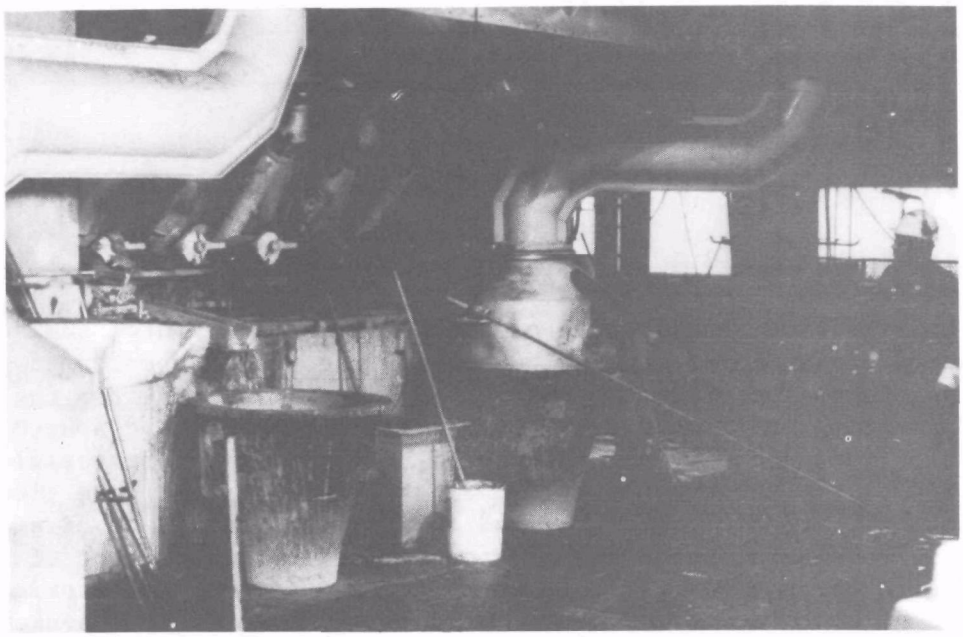

PLATE 3. Slag tapping area.

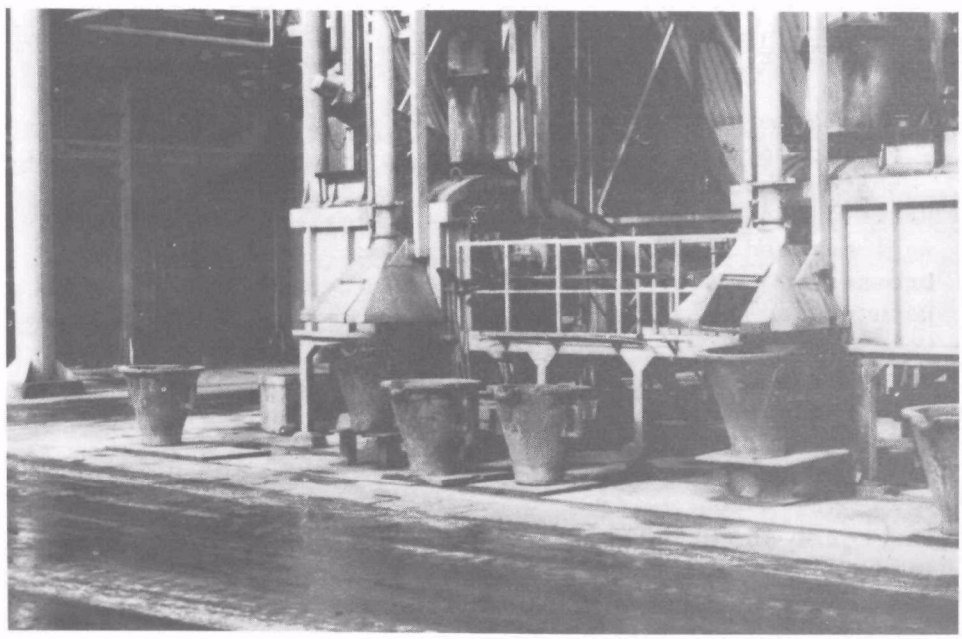

PLATE 4. View of agglomeration furnace.

SECTION 3

SUMMARY OF RESULTS

In this section, the results of the NIOSH and EPA source characterization studies are summarized. The purpose of the testing performed for this program was to characterize the operation of and emissions from the combined SB smelting and flue dust agglomeration furnaces. The source characterization included: 1) an analysis of the smelter feed materials, 2) a description of the furnace operation, 3) a determination of the flows of lead, antimony, arsenic, chlorine, and sulfur, 4) measurement of stack emissions, 5) calculation of an emission factor, 6) measurement of lead-in-air levels in the smelter yard, 7) workplace and personal monitoring, 8) evaluation of ventilation and other employee exposure control systems, and 9) observation and evaluation of work practices and personal protective equipemnt.

The major results are:

- The smelter feed consisted of the followng materials:

Whole Batteries	
-polypropylene case	12.6% (weight)
-hard rubber case	12.6
Battery Plates	31.5
Agglomerated Dust [or battery mud]	3.2
Drosses	3.2
Return Slag	22.1
Coke	5.7
Scrap Iron	1.9
Mill Scale (FeO)	6.3
$CaCO_3$	0.9
Total	100.0

  The total input materials contained an average of 79 metric tons lead, 1.5 metric tons antimony, 29 kilograms arsenic, 0.1 metric tons chlorine, and 2.6 metric tons sulfur per day.

- During the test period, these five elements were distributed in the smelter output materials as shown in Table 2:

TABLE 2. APPROXIMATE ELEMENTAL DISTRIBUTION IN SMELTER EXIT STREAMS

Output stream	Percent of total incoming flow				
	Pb	Sb	As	Cl	S
Lead bullion	87.7	98.5	10.4	12.8	0.14
Lead stone (matte)	0.90	11.2	75.7	36.8	98.0
Stack Gas	0.0025	0.84	0.07	75.8	7.2
Total	89	110	86	125	105

(Estimated accuracy of elemental flow rates is ±20%.)

- The chlorine content of the agglomerated flue dust averaged 25 percent by weight. This demonstrates the accumulation of chlorine in the flue dust collection system.

- The lead particulate emission rates based on the EPA Method 5 test results were:

  -September 26, 1978 0.056 kg Pb/hr
  -September 27, 1978 0.046 kg Pb/hr

- Total stack lead emissions, based on the wet electrostatic precipitator (WEP) experiments, ranged between 0.042 and 0.12 kg Pb/hr.

- The stack lead particulate emission factors (after control) based on the WEP experiments were:

  -September 26, 1978 14 g Pb/metric ton Pb product
  -September 27, 1978 42 g Pb/metric ton Pb product

- Stack chlorine emissions ranged from 1.6 to 7.1 kg/hr.

- Stack gas concentrations ranged from 39 to 54 ppm sulfur during the test. This corresponds to sulfur emission rates of 6.7 and 9.1 kg S/hr.

- Total stack antimony emissions ranged between 0.52 and 0.54 kg/hr.

- Total stack arsenic emissions ranged between 0.0005 and 0.0013 kg/hr.

- Only one high volume area sampler was run on each of the two test days. The hi-vol was placed underneath the baghouse nearest the east fenceline (see Figure 4). It was approximately four meters from the east agglomeration furnace and 80 meters from the east fenceline. The two twenty-four hour average lead-in-air levels were:

  -September 26, 1978 12 μg Pb/m^3
  -September 27, 1978 18 μg Pb/m^3

  Stack emissions based on the WEP tests are presented in Table 3:

TABLE 3. STACK EMISSIONS DETERMINED USING WEP TRAIN

Element	September 26, 1978 Concentration (μg/Nm^3)	September 26, 1978 Emission rate (kg/hr)	September 27, 1978 Concentration (μg/Nm^3)	September 27, 1978 Emission rate (kg/hr)
Lead	1010	0.12	350	0.04
Antimony	4390	0.54	4370	0.52
Arsenic	4	0.0005	11	0.0013
Chlorine	13300	1.6	59500	7.1
Sulfur	55700	6.7	77100	9.1

- The engineering and work practice controls of employee exposure at this smelter are exemplary. The effectiveness of this system of controls is evidenced by the control of employee exposures to lead in all work activities associated with the SB furnace to approximately 100 μg/m^3 or less.

- In general, the local exhaust ventilation systems provided for the SB furnace are well designed and maintained. They provide good enclosure of emission sources, vigorous hood face and duct transport velocities, access openings and mobility to allow efficient performance of routine work.

- Yard sprinkling and washdown procedures appeared to greatly minimize entrainment of dust into the air, tracking of muddy materials into other work areas, and splashing of mud on employee clothing and plant equipment.

- Washdown procedures employed in the SB furnace operating area did maintain floors in dust free and clean condition.

- The SB furnace process control room was found to be contaminated with lead (38 to 54 μg Pb/m^3).

The specific measurements and results are presented along with the description of the smelter operation in the following sections.

SECTION 4

SOURCE CHARACTERIZATION

SMELTER OPERATING CONDITIONS

The SB furnace operated steadily during the entire test period. The furnace was being operated somewhat differently than normal because at present all slag generated by the furnace must be stockpiled and a portion recycled. Permission to dump the slag in a landfill has not yet been obtained. The chalk ($CaCO_3$) feed to the furnace was reduced slightly. The slag still contained 0.55 percent lead by weight. This is well within the range of normal operation, during which the furnace slag typically contains less than 2 percent lead.

This lower chalk feed rate makes the slag less viscous and allows the slag temperature to be maintained at approximately 100°C lower than normal. The lower operating temperature makes the furnace operation slightly easier from an environmental viewpoint because the top temperature can be maintained between 100 and 140°C more easily. This may result in lower fume generation at the furnace top and correspondingly lower fugitive emissions.

Feed Characteristics

The Bergsøe smelter does not normally receive a large quantity of polypropylene-cased (poly) batteries in their feed. Some poly batteries were stockpiled for this test. The day of the testing (26 September), the poly batteries were added to the SB furnace charge. The poly batteries comprised approximately 12.6 weight percent of the total furnace charge during the tests. This corresponds to 20 percent of the lead-bearing charge to the furnace. The approximate furnace feed on September 25, 26, and 27 consisted of the following materials:

Whole batteries	
- polypropylene case	12.6% (weight)
- hard rubber case	12.6
Battery plates	31.5
Agglomerated dust (or battery mud)	3.2
Drosses	3.2
Return slag	22.1
Coke	5.7
Scrap iron	1.9
Mill scale (FeO)	6.3
$CaCO_3$	0.9
Total	100.0

The furnace feed is prepared (bedded) using a front end loader. A layer of coke is first spread on the floor of the charge bedding area (see Figure 4). The other components of the charge are then spread on top of the coke. This procedure results in an even distribution of coke in each bucket of feed delivered to the furnace.

The target for each charge is 20 metric tons of lead bearing material. Between three and four charges are required to match the SB furnace production. An attempt was made to record the weight of all materials charged to the furnace during the test. However, only a portion of the individual charge data was made available by the Bergsøe management. Table 4 presents the data recorded for five of the charges fed to the furnace during the test. Note how closely to the target of 20 metric tons of lead bearing material each charge is prepared.

TABLE 4. TYPICAL CHARGE MATERIALS DURING THE TEST PERIOD (Weight in kilograms)

		Charge date/time				
Feed material	Target	9/25 1200	9/26 0750	9/26 1200	9/27 0300	9/27 0830
Whole batteries	8,000					
- poly			4,180	4,550	4,500	4,060
- rubber		7,590	4,260	4,260	3,650	3,920
Battery plates	10,000	9,930	9,700	9,850	9,820	10,370
Agglomerated dust	1,000		1,140	840	620	600
Drosses	1,000		1,260	980	930	1,180
Battery mud*		2,050				
Return slag	7,000	6,810	7,170	6,760	7,060	7,300
Coke	1,800	1,770	1,760	1,790	1,900	1,750
Scrap iron	600	640	500	660	460	930
Mill scale	2,000	2,030	2,390	2,060	1,880	2,440
$CaCO_3$	300	660	320	280	80	190
Subtotal	31,700	31,480	32,680	32,030	30,900	32,740
Lead scrap**	-			4,860		
Total	31,700	31,480	32,680	36,890	30,900	32,740

*Charged instead of Drosses and Agglomerated dust
**Total lead scrap fed to the furnace during test

Table 5 lists the data provided by the Bergsøe management for the week of the test. It was stated that only 4,860 kg of the lead scrap listed in Table 4 was charged during the two test days. This could not be verified. The lead scrap needs only to be melted in the SB furnace; no smelting is required.

TABLE 5. REPORTED FURNACE FEED DATA FOR THE TEST WEEK
(Weight in kilograms)

Lead-bearing material	Weekly Average	Daily average	Percent of charge
Whole batteries	265,440	37,920	38.5
Battery plates	269,330	38,476	39.1
Battery mud	48,850	6,979	7.1
Agglomerated dust	16,450	2,350	2.4
Lead drosses	17,440	2,491	2.5
Subtotal	617,510	88,216	89.6
Lead scrap	71,450	10,207	10.4
Total	688,960	98,423	100.0

Energy Consumption

There are seven separate items which must be considered with regard to energy consumption per ton of lead in the SB battery smelting system. Table 6 lists each of these items and the corresponding fuel or electrical power consumption.

These values are comparable to a 1 meter (40 inch) cylindrical blast furnace which is reported to use approximately 74 kg coke per metric ton of lead product, an afterburner, but no fuel for air preheating. Total energy use for the 1 meter blast furnace is approximately 5.67×10^9 J/metric ton Pb compared to 4.81×10^9 J/metric ton Pb for the SB furnace. Additional energy is supplied in the SB furnace by the polypropylene and rubber battery cases.

Production Data

The average SB furnace production rate during the test period (26 and 27 September) was approximately 70.5 metric tons per day. However, as can be seen in Table 1, at least 4.86 metric tons of lead scrap (pipes, flashing, drains, etc.) were included in the furnace feed during the test period. By comparison, the production rate for a 1 meter blast furnace would be approximately 29.5 metric tons per day. The production rate (metric tons/day) per square meter of furnace hearth cross-section is 17.6 for the SB furnace and 37.3 for the 1 meter blast furnace.

Table 7 presents the production data provided by the Bergsøe management for the week of the test. Table 8 presents production data from a 91-day campaign.

TABLE 6. ENERGY CONSUMPTION DATA

Item	Consumption units	Units per metric ton of lead	10^6Joules per unit	10^6Joules per metric ton of lead
Coke	kg	71.01	30.14	2140
Oxygen	Nm^3	40.83	6.82×10^{-6}	0.0003
Air preheater	liters(L)	24.10	39.39	950
Afterburner	liters(L)	39.19	39.39	1540
Agglomerators	liters(L)	2.46	37.91	93
Electricity	joules(J)			0.42*
Vehicles (2 front end loaders, 1 fork lift)	liters(L)	2.15 (estimate)	38.74	83
Total				4806

*Based on 91-day average production of 75,769 kg/day

TABLE 7. REPORTED PRODUCTION DATA FOR THE WEEK OF SEPTEMBER 24, 1978

Furnace output	Weekly production	Daily average	Recorded data 25 Sept	26 Sept	27 Sept	Average
Lead bullion	482,300	68,900	81,675	79,200	61,875	74,250
Flue dust	21,500	3,071	2,320	2,900	3,480	2,900
Slag	271,000	38,714	41,800	37,688	38,716	39,401
Matte	95,200	13,600	14,686	13,241	13,601	13,843

TABLE 8. REPORTED PRODUCTION DATA FOR A 91-DAY CAMPAIGN (Weight in kilograms)

Furnace output	Weekly production	Daily average
Lead bullion	6,895,000	75,769
Flue dust	614,300	6,750
Slag	4,195,400	46,103
Matte	1,474,000	16,198

Furnace Operation

As mentioned earlier, the SB furnace operated steadily during the entire test period. A number of parameters were recorded in order to show how the furnace conditions varied during the test period. These are listed in Table 9.

The data listed in Table 9 are typical for the SB furnace operation. The oxygen enrichment of the blast air is small, between 50 and 120 Nm^3/hr. However, the oxygen does help reduce the amount of blast air required, thereby reducing the velocity of the gases rising through the furnace shaft. The oxygen-enriched blast air pressure ranged from 1030 to 1180 mm H_2O. This is slightly higher than the desired 800 to 1000 mm H_2O operating pressure range but did not cause any noticeable problems.

The major factor in reducing the quantity of process gas in the furnace is the air preheater. By preheating the oxygen-enriched air to between 470 and 500°C in an external preheater, less coke is required in the furnace. Thus a portion of the combustion products are eliminated along with the combustion air required to burn the coke needed for air preheating.

The furnace top temperature is kept quite low relative to other blast furnace operations. The process gas temperature ranged between 89 and 180°C during the test period. The low top temperature prevents the battery case material from igniting. Should the case material happen to ignite or begin smoldering, additional material is charged to the top of the furnace and the blast air is adjusted. The low top temperature also minimizes the amount of fume exiting in either the process or hygiene gas streams.

The process gases exited the furnace between 89 and 180°C during the test period. The hydrocarbons in these gases are combusted in the oil-fired afterburner. The gases exit the afterburner between 700 and 800°C. Fresh air is then added through a small damper, cooling the gases to approximately 430°C. The gases cool further in the ductwork and are then mixed with the cooler furnace hygiene air. The ratio of process gas to hygiene air is approximately 1:2. The gases then enter the four baghouses at a temperature below 130°C. If the temperature of these gases rises above 130°C, cold ambient air is admitted via a small damper. This is done to protect the felted polyester used as filter material. The gases cool in the baghouse and exit the stack between 82 and 90°C.

HIGH VOLUME AIR MONITORING

One high volume (hi-vol) air sampler (GMWL model #2000H) was placed under the easternmost baghouse near the two agglomeration furnaces (see Figure 4). The hi-vol was approximately 80 meters from the smelter fenceline. No ambient measurements were permitted at the fenceline because of the close proximity of the rotary department (Building #3), the old smelter, and the motorway which lies approximately 200 meters from the fenceline.

Two samples were collected during the test period. Table 10 presents the test results.

TABLE 9. OPERATING PARAMETERS RECORDED DURING THE CHARACTERIZATION TESTS

Parameter	Units	Date/time 9/25/78 1400	9/26/78 0830	9/26/78 1500	9/27/78 0600	9/27/78 1500
Oxygen flow	Nm^3/hr	-	58	114	56	97
Oxygen/air pressure	mm H_2O	1050	1030	1080	1030	1180
Oxygen/air temperature	°C	474	495	472	495	479
Blast air (in)	Nm^3/hr	3340	3720	3240	3740	3340
Water jacket (in)	°C	52.5	47.5	48.5	-	48
Water jacket (out)	°C	62	64.5	59	-	57
Furnace top (process)*	°C	89/98	101/180	93/100	77/169	143/105
Afterburner (inlet)	°C	90	150	100	175	135
Afterburner (outlet)	°C	700	-	750	800	800
Afterburner (outlet after fresh air dilution)	°C	460	430	415	460	435
Afterburner (outlet before mix point)	°C	330	290	290	305	320
Furnace top hygiene air (avg.)	°C	27	27	25	26	26
Baghouse inlet temp. (avg.)	°C	132	110	104	115	117
Stack temperature	°C	84	85	82	85	90
Stack gas flow	Nm^3/hr	-	120,000	120,000	115,000	120,000

*Temperatures at both process gas ducts exiting the furnace.

TABLE 10. HI-VOL AREA SAMPLING RESULTS

Date	Sampling period (hr:min)	Total particulate collected (μg)	Total lead collected (μg)	Ambient air concentration (μg Pb/m^3)
26 Sept 78	23:00	197,700	24,500	12
27 Sept 78	25:56	201,900	41,600	18

It is important to note that the sprinkler system failed during the second test day. This caused the pavement to dry. This may have caused the increase in total lead-in-air from 12 to 18 μg/m^3 and caused the percentage of lead in the collected particulate to rise from 12 percent on 26 September to percent on 27 September. These data highlight the importance of washdown procedures in minimizing fugitive windblown dust in the smelter yard.

An extensive fenceline monitoring program was not conducted because of the close proximity of the old smelter and a major motorway. It was felt that fenceline monitoring data would have little significance because of interference from these other sources.

STACK SAMPLING

Description of Sampling Locations

Stack sampling was performed from an instrument platform approximately 25 meters from the base of the stack. The stack is a double wall design (see Figure 5). The inside diameter of the interior stack is 2.5 meters and the inside diameter of the outside stack is 4.8 meters.

The instrument level was equipped with four access ports to the interior stack, located at 90° intervals. Three ports were unavailable for use because plant instrumentation was installed in the ports. The one available port was located in line with an instrument access hole through the outer stack. This allowed the use of a probe of sufficient length to traverse one entire diameter of the inner stack. The sampling location was approximately ten diameters upstream and downstream of any flow disturbances. Velocity measurements also indicate that the gas flow at the sampling level was laminar. As a result, making a stack traverse across only one diameter (rather than two at 90° angles) should not affect the validity of the sampling results. Twelve traverse points were used during sampling. The distances of the traverse points from the inside wall at the sampling port are listed in Table 11.

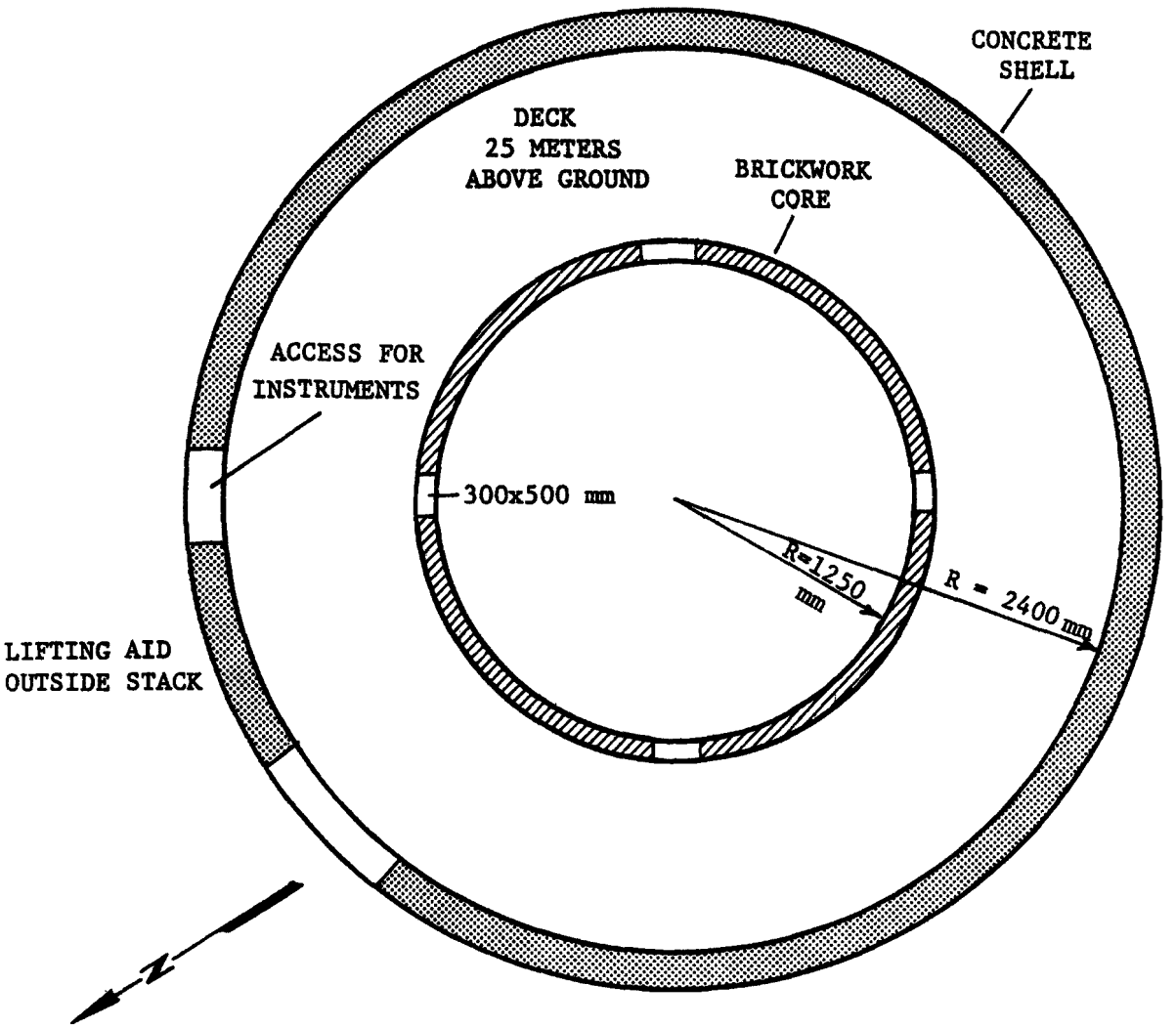

Figure 5. Stack cross-section.

02-3762-1

TABLE 11. TRAVERSE POINTS MEASURED FROM THE INSIDE WALL AT THE SAMPLING PORT[1]

Point	Location (cm)
1	4.6
2	16.5
3	29.2
4	44.5
5	62.2
6	88.9
7	161.3
8	187.3
9	205.7
10	220.4
11	233.1
12	244.5

[1]All points are rounded to the nearest 0.6 cm.

EPA Method 5

The EPA Method 5 sampling train pictured in Figure 6 was used to determine the following:

- Average stack temperature and velocity,
- Lead particulate emissions, and
- Total sulfur and chlorine emissions.

Stack Temperature/Velocity Determination--

The Method 5 sampling train was used to determine the average temperature and velocity in the smelter stack on September 25, 1978. A traverse of only one radius was possible because the other ports in the stack were in use.

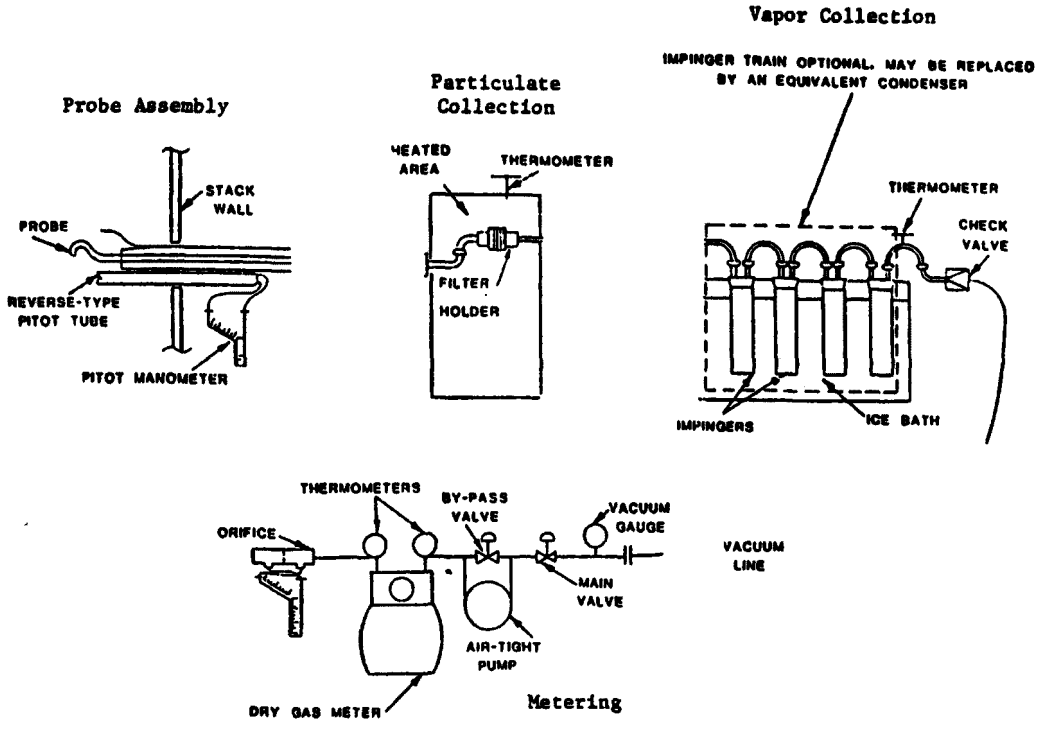

Figure 6 EPA 5 sampling train.

Lead Particulate Stack Emissions--

Stack particulates were collected on a glass fiber filter heated to 121°C (250°F) in a thermostated oven. Both the filter and probe were heated during sampling. Table 12 presents the results of this experiment for both test days. It is important to note that the average grain loadings for both days were identical. This indicates that the baghouse was operating normally and was allowing a constant amount of fine particulate to pass through with the gas stream.

An analysis of the particulate matter collected on the filter was made for lead and chlorine. Lead analyses were performed for these and all other experiments using atomic absorption spectrophotometry. Chlorine analysis was performed using a colorimetric determination. The emission rates were 56 and 46 grams of lead per hour on 9/26/78 and 9/27/78 repectively based on the particulate collected on the filter. Table 13 summarizes the results of the lead particulate emissions testing. No chlorine could be detected in the particulate material.

TABLE 12. EPA METHOD 5 RESULTS

	Average velocity determination	Particulate, chlorine, and sulfur determination	
Date	26 Sept 78	26 Sept 78	27 Sept 78
Time	0910-0935	1110-1210	0808-0944
Sample duration	25 min	1 hr	1 hr 36 min
Sample volume at meter		0.889 m^3(0.802 Nm^3)	1.44 m^3(1.31 Nm^3)
Avg. meter temperature		31°C	31°C
Meter pressure	762 mm Hg	762 mm Hg	764 mm Hg
Avg. stack temperature	85°C	89°C	87°C
Stack pressure	761 mm Hg	761 mm Hg	764 mm Hg
Avg. gas velocity	9.50 m/s	9.34 m/s	9.08 m/s
Total gas flow	1.26×10^5 Nm^3/hr	1.22×10^5 Nm^3/hr	1.19×10^5 Nm^3/hr
Moisture content of gas (Volume %)	2.0	2.0	2.4
Gas molecular weight	28.2	28.2	28.1
Mass collected, filter		3.28 mg	4.72 mg
Mass collected, probe		26.08 mg	43.20 mg
Mass collected, total		29.36 mg	47.92 mg
Nozzle diameter		0.617 cm	0.617 cm
Nozzle area		2.99×10^{-5} m^2	2.99×10^{-5} m^2
Stack diameter		2500 mm	2500 mm
Stack area		4.91 m^2	4.91 m^2
Avg. sample velocity at nozzle		10.07 m/s	10.20 m/s
Particulate concentration		36.6 mg/Nm^3	36.6 mg/Nm^3
Particulate mass rate by area		4.82 kg/hr	4.92 kg/hr
Particulate mass rate by concentration		4.47 kg/hr	4.36 kg/hr
Particulate mass rate		4.64 kg/hr	4.64 kg/hr
Percent isokinetic		108%	112%

TABLE 13. LEAD PARTICULATE EMISSIONS TEST RESULTS

Date	Gas volume sampled (Nm^3)	Stack gas flow (Nm^3/hr)	Total particulate flow* (kg/hr)	Pb particulate collected† (μg)	Pb flow rate (g Pb/hr)
9/26/78	0.802	1.22×10^5	4.47	365	56
9/27/78	1.31	1.19×10^5	4.36	505	46

*Using measured concentration

† On Filter

These results indicate that the baghouse is extremely efficient in removing lead particulate. There appears to be other material, perhaps a condensing fume, which accounts for most (∿99%) of the particulate collected. Antimony pentachloride ($SbCl_5$) may constitute a portion of the particulate collected. $SbCl_5$ boils at 79°C and may be condensing between the baghouse exit and the 25 meter level of the stack.

Sulfur and Chlorine Stack Emissions--

Sulfur and chlorine compounds were collected in a series of three impingers which were placed behind the heated filter in the Method 5 sampling train (see Figure 6). Two impingers in series containing 1% NaOH followed by an impinger containing 6% H_2O_2 were used for the experiment. The filter used to collect lead particulate was also analyzed for chlorine. A Dionex® ion chromatograph was used for the sulfur determinations. A colorimetric determination using mercuric thiocyanate was used for the chlorine determinations.

The results of the gaseous sulfur and chlorine determinations are presented in Table 14. The sulfur emissions are fairly constant, 6.7 and 9.1 kg S/hr. The chlorine emissions, however, varied by a factor of 4.4. This may be due in part to a larger portion of flue dust or flue dust containing a higher percentage of chlorine being recycled during the second day.

TABLE 14. GASEOUS SULFUR AND CHLORINE EMISSION TEST RESULTS

Date	Gas volume sampled (Nm^3)	Stack gas flow (Nm^3/hr)	Sulfur			Chlorine		
			mg collected	gas conc. (ppm S)	emission rate (kg S/hr)	mg collected	gas conc. (ppm Cl)	emission rate (kg Cl/hr)
9/26/78	0.802	1.22×10^5	44.1	39	6.70	10.7	8.4	1.6
9/27/78	1.310	1.19×10^5	100.0	54	9.10	78.0	38	7.1

The sulfur emissions (as SO_x) were checked on September 27 using another sampling train containing a filter followed by two 6% H_2O_2 impingers. The results of this test showed 41 ppm SO_x in the gas stream, corresponding to an emission rate of 7.0 kg S/hr. This is in good agreement with the two values listed in Table 12.

The sources of the sulfur in the stack gas are the rubber battery cases, battery acid or mud, coke, and afterburner and agglomeration furnace fuel oil. The average SO_x concentration in the stack includes the dilution effects of the hygiene air, the afterburner and agglomeration furnace combustion products, and any additional cooling air.

The results of the chlorine determinations showed emission rates of 1.6 and 7.1 kg Cl per hour. These results are discussed in conjunction with the results of the wet electrostatic precipitator tests in the following section.

Wet Electrostatic Precipitator (WEP)

The wet electrostatic precipitator (WEP) sampling train shown in Figure 7 was developed by Radian Corporation specifically for trace metal sampling. An electrolyte is circulated through a round bottom flash and a vertical glass cylinder by a peristaltic pump (see Figure 8). The walls of the cylinder are wetted by the falling film of electrolyte. A thin platinum wire is suspended in the center of the glass cylinder. A high voltage of 12 to 15 kV-DC causes a corona discharge at the center electrode. The gas entering the WEP is first scrubbed and cooled in the round bottom flask. Particulates and mist not retained here are electrically charged in the glass cylinder, collected in the falling film and washed into the electrolyte reservoir. This sampling device does not clog like a filter or a thimble, and no analytical background corrections are necessary since no extraneous material is introduced as is the case with filters. The probe consists of a teflon nozzle and is teflon lined. Teflon tubing is used to connect the probe with the WEP. All the lines are rinsed after sampling and combined in the WEP. The WEP is followed by a train of nine impingers. The impingers contained:

1) 20% HNO_3
2) 20% HNO_3
3) Dry
4) 10% NaOH
5) 10% NaOH
6) Dry
7) 6% H_2O_2
8) Dry
9) Silica gel (dessicant)

A pump and a dry gas meter complete the assembly. The WEP train was operated isokinetically at a single point of average velocity in the stack.

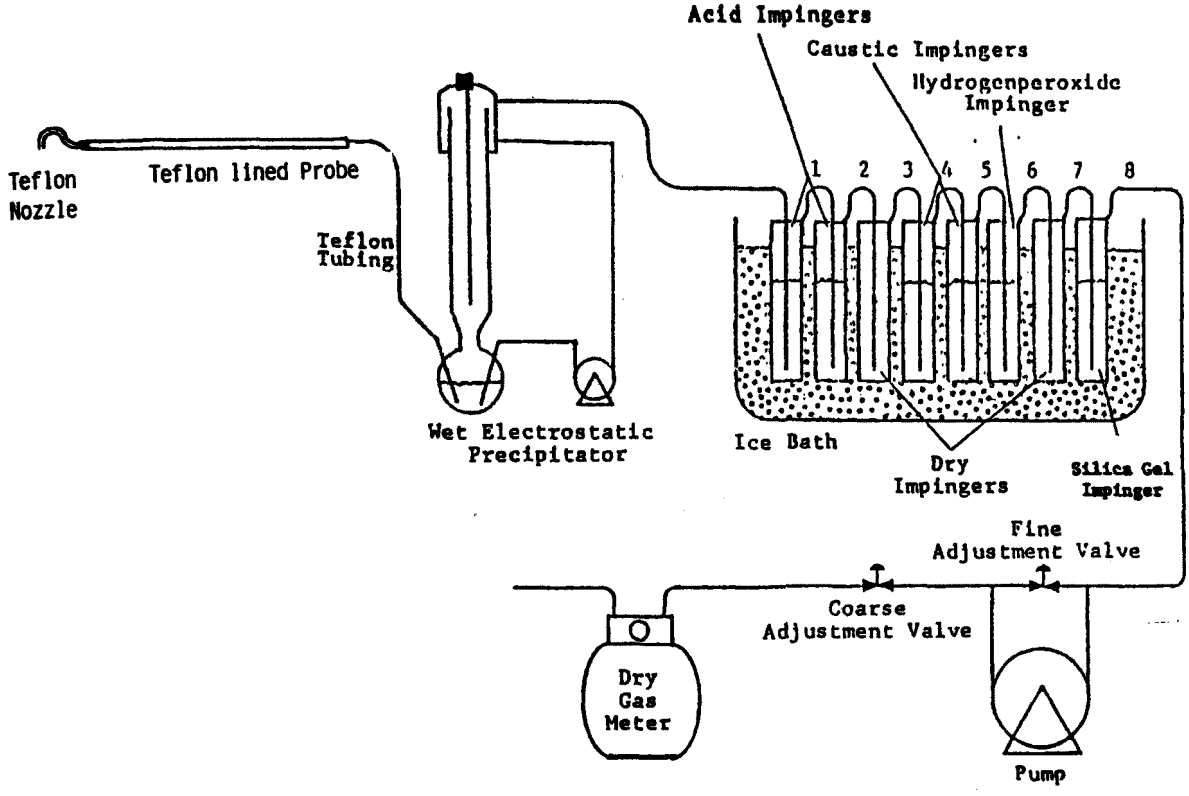

Figure 7. Schematic of the integral WEP sampling train.

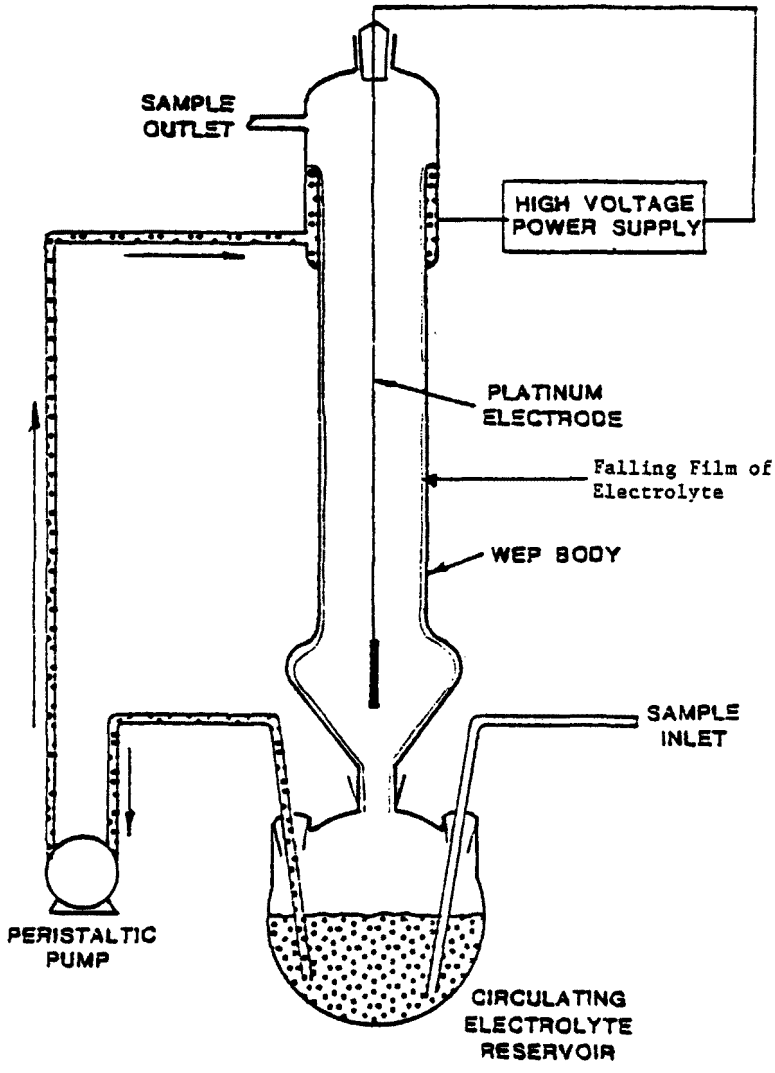

Figure 8. Wet electrostatic precipitator.

Table 15 presents the results of the Method 5 WEP tests. All analyses for lead, antimony, and arsenic in these and all other samples were performed using atomic absorption spectrophotometry. The emission rates listed are total emissions, including both gaseous and particulate species. It is important to note that the total lead emission rates listed in Table 15 for 26 September are 2.2 times higher than those listed in Table 13 for the solid particulate in the Method 5 filter catch. This indicates that volatile lead compounds may be escaping the baghouse in addition to the normal fine particulate matter. The material collected in the probe wash (see Table 12) may account for part of the difference in the WEP and Method 5 lead emission values. However, the material collected in the probe wash appeared to be organic in nature. Unfortunately, no analysis of the probe wash was made. Consequently, an accurate comparison of the WEP and Method 5 results cannot be made.

TABLE 15. TOTAL LEAD, ARSENIC, AND ANTIMONY EMISSION TEST RESULTS

			Emission rates					
			Lead		Arsenic		Antimony	
Date	Volume of gas sampled (Nm^3)	Total gas flow (Nm^3/hr)	μg collected	g Pb/hr	μg collected	g As/hr	μg collected	g Sb/hr
26 Sept 78	3.76	1.22×10^5	3800	123	15.3	0.50	16,500	535
27 Sept 78	3.23	1.19×10^5	1140	42	35	1.29	14,100	519

Arsenic emissions are relatively low. This is to be expected because of the small amount present in the feed materials.

The antimony emission rates of 535 and 519 grams per hour were unexpectedly high. These emissions can be attributed to the presence of chlorine. It is believed that $SbCl_5$ is the compound being emitted. $SbCl_5$ boils at 79°C and may pass through the baghouse as a vapor. If no chlorine were present, virtually no antimony emissions would be expected. Antimony oxide Sb_2O_3, sublimes at 1550°C and would not be volatile at stack temperature.

Stack Emission Factors

In general, the measured emission rates for all species were quite low. The stack emission factor ranges presented in Table 16 were calculated based on a lead production rate of 70.5 metric tons of lead per day the Method 5 experiments for chlorine and sulfur, and the WEP experiment emission rates for the metals. Of course, these results are for two days of normal operation. Different feed materials or operating conditions (e.g., only three baghouses operating) could significantly alter these results.

TABLE 16. STACK EMISSION FACTORS FOR THE SB BATTERY SMELTING FURNACE

Element	Emission factor (g/metric ton Pb product)
Lead	14 to 42
Arsenic	0.17 to 0.44
Antimony	180
Sulfur (as S)	2300 to 3100
Chlorine	550 to 2400

MATERIAL FLOW

The determination of the flow of lead, antimony, arsenic, chlorine and sulfur through the SB furnace was a key part of the characterization study. Data gathered on the concentration of these elements in the smelter input and output can help identify potential problems and advantages of the SB furnace and the agglomeration furnaces.

Two days of sampling data were collected for the material flow determination. The furnace had been running steadily for more than a month prior to the testing. The addition of polypropylene-case batteries to the furnace charge was a change from normal operation, but no major change in furnace emissions were either expected or observed.

Feed Characterization

An attempt was made to record the weight of all materials in each charge during the test period. However, data on only five of the charges were made available by the smelter management. As a result, an exact material balance could not be completed for the test period.

Samples of each type of feed material were collected for analysis. The samples taken are by no means homogeneous, integral samples. The feed materials to most secondary lead smelters vary daily as different brands and different type batteries are received for smelting. It was not possible to collect an "average" or "homogeneous" sample representing two days of smelting. On a monthly or yearly basis, a "representative" feed could be determined.

As a result, grab samples of what appeared to be a typical feed sample from the charge bedding floor were taken along with samples from each pile of material used to prepare the charge. Table 17 presents the results of the analyses of each of these samples.

TABLE 17. AVERAGE FEED MATERIAL COMPOSITION

Material	Date	Pb (Wt %)	Sb (ppm)	As (ppm)	S (Wt %)	Cl (ppm)
Feed composite		63.0	1.2%	230	2.1	310
Battery plates† (composite)	9/26 & 9/27	59.2	7420	416	0.6	1200
Return slag	9/26	0.52	150	74	1.0	4430
	9/27	0.58	200	107	0.8	7100
Flue dust††	9/26	64.9	2295	5	0.6	26.0%
	9/27	59.8	1780	3	0.4	24.2%
Battery mud		65.0	1.01%	231	1.3	5500
Drosses		72.1	4.26%	298	2.6	3600
Coke					0.7	
Rubber case					1.4	370
Polypropylene case						370
PVC separator						51.5%

†Normal values range from 68 to 72 percent lead. The low value measured here may be caused by sampling errors.

††Normal chlorine content of flue dust reportedly ranges between 12 and 15 percent.

Product Samples

Samples of flue dust, slag, matte, and bullion were collected as they were tapped from the furnaces. However, the matte and slag samples taken directly from the furnace did not have a chance to settle completely. As a result, additional samples were collected from the cooled slag pots after the matte and slag were separated. The results of the product sample analyses are presented in Table 18. Analyses for lead, antimony, and arsenic were performed by atomic adsorption spectrophotometry. Sulfur analyses were performed with a Leeko sulfur analyzer. Chlorine analyses were performed by titration with $AgNO_3$ (the argentometric method).

TABLE 18. PRODUCT STREAM ANALYSES

Material	Date	Pb (Wt %)	Sb (ppm)	As (ppm)	S (Wt %)	Cl (ppm)
Bullion	9/26	98.6	1.96%	16	0.19	268
	9/27	99.2	2.24%	107	0.11	275
	9/27	96.7	2.10%	5	0.16	210
Matte	9/26	4.4	1.22%	1685	19.62	5220
(from yard)	9/27	6.2	1.28%	1585	18.82	2350
Matte (from furnace)	9/26	10.9	1.68%	1685	10.98	2940
Slag	9/26	0.52	150	5	1.04	4430
(from yard)	9/27	0.58	200	3	0.79	7100
Slag (from furnace)	9/27	0.54	440	99	1.56	6930
Flue dust	9/26	64.9	2295	5	0.61	26.0%
	9/27	59.8	1780	3	0.36	24.2%

Elemental Partitioning

A detailed material balance for the test period could not be completed because weights of several furnace charges were not made available. However, the results presented in Tables 4, 7, 17 and 18 do allow an estimate to be made of how the elements present in the furnace are distributed in the furnace products. The partitioning effect of the SB and agglomeration furnaces is shown in Table 19. Of course, chlorine was accumulating in the furnace system during the test period. Chlorine is periodically removed from the system by leaching the flue dust or by removing a batch of flue dust for use in another smelting process. The numbers in Table 19 represent the elemental partitioning several weeks after the last batch of flue dust was removed.

TABLE 19. ELEMENTAL PARTITIONING IN THE SB SMELTING FURNACE

Element	Feed material* (kg/day)	Intermediate streams: Flue dust (% of feed material)	Intermediate streams: Slag (% of feed material)	Product streams: Lead metal (% of feed material)	Product streams: Matte (% of feed material)	Product streams: Stack gas (% of feed material)
Lead	79000	2.52	0.27	87.68	0.90	0.0025
Antimony	1500	0.43	0.44	98.49	11.15	0.84
Arsenic	29	0.04	0.53	10.38	75.66	0.07
Sulfur	2600	0.59	13.28	0.14	98.00	7.20
Chlorine	140	580.2	159.6	17.83	36.81	75.83
Total	81814					

*Based on average feed for sampling period, 26 and 27, September, 1978, and analytical results in Tables 14, 15, 17 and 18.

SECTION 5

CONTROL TECHNOLOGY ASSESSMENT

DESCRIPTION OF EQUIPMENT AND CONTROLS

Section 2 of this report contains descriptive information concerning the SB shaft furnace and controls. This section emphasizes the features of the SB furnace and associated equipment which are important for the control of employee exposures to lead and other workroom contaminants.

Receipt of Raw Materials

The containment and suppression of airborne contamination inherent in handling feed materials is an integral feature in the design of this secondary lead smelting complex. Figure 9 presents an overview of the SB Furnace Building and the Charge Storage and Preparation Building. Materials are received by truck and are usually unloaded in the paved yard area. Here the materials are separated and then transferred into the Charge Storage and Preparation Building by large rubber-tired, diesel-fueled front-end loaders. Industrial lift trucks are also utilized in the receipt (off loading) of feed materials.

The paved yard area is kept wet by water sprinklers. Many of the sprinkler heads are mounted at elevated locations on the sides of buidings. The sprinklers activate automatically at preset intervals. The fixed sprinklers are supplemented by mobile sprinkling trucks and wet sweeping units. Water hoses are also used by employees to wet down surfaces and to clean up mud, etc. Wet suppression of yard dust is feasible at this smelting location since the climate is moderate with infrequent freezing weather.

Charge Storage and Preparation

The Charge Storage and Preparation Building (refer to Figure 9) is a large concrete structure with concrete floors and multiple roll-up access doors. To aid in dust suppression the floors of this building are periodically wetted using water hoses. Feed materials are stored in large bins separated by concrete partitions. No processing of feed materials takes place in this building. Those batteries which are received in whole form are not decased and remain somewhat intact through the materials handling, charge bedding and furnace charging operations. Other charge materials have been processed by scrap dealers, etc. These materials (battery plates, etc.) are mixed with other materials in the bedding procedure.

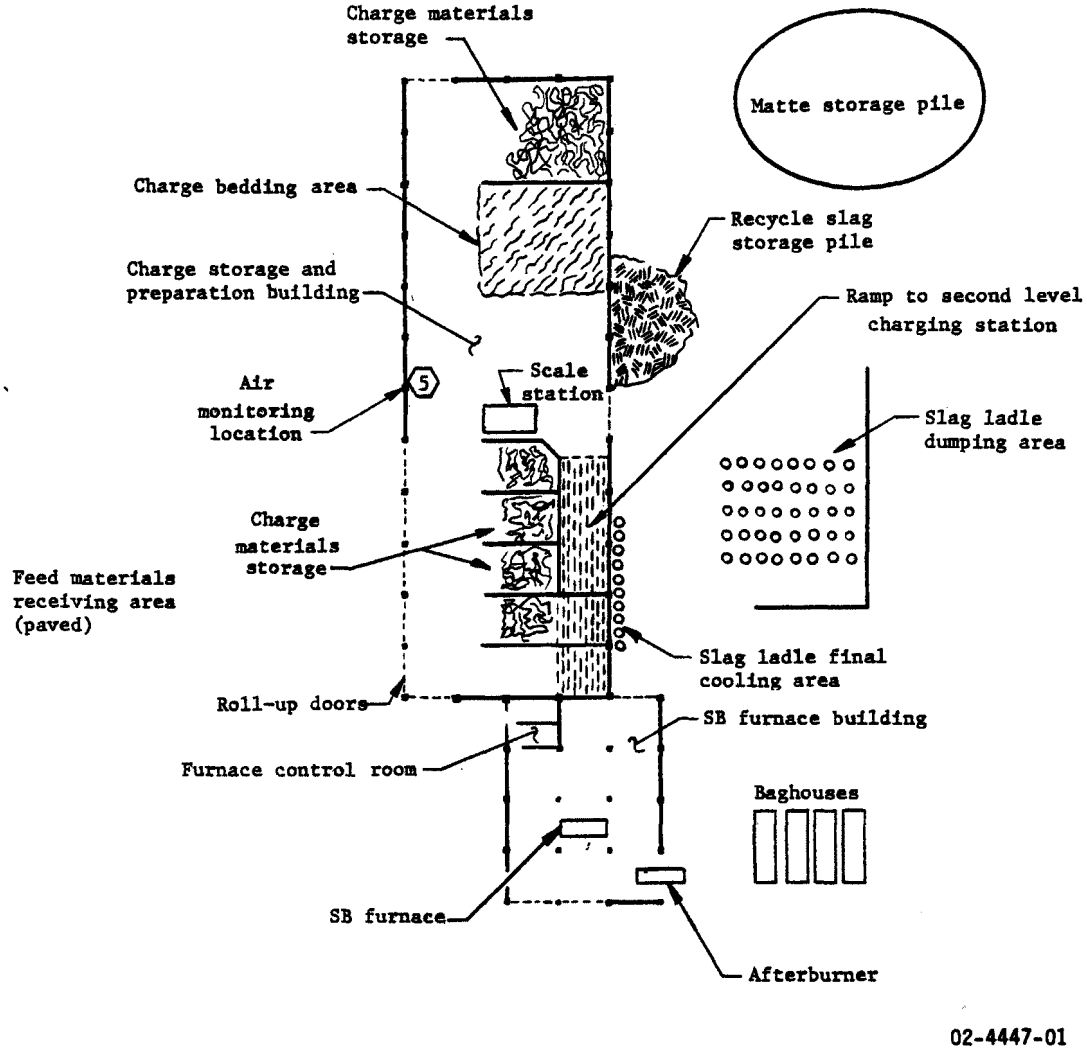

Figure 9. Overview of SB furnace building and charge storage and preparation building

One rubber-tired, diesel-fueled front-end loader is routinely assigned to this building and performs materials off-loading, storage in bins, charge bedding and furnace charging. This front-end loader is equipped with a filtered air supply to the operator's cab.

SB Furnace Charging Facilities

The charging of the SB furnace is performed on the second level of the SB Furnace Building (refer to Figure 9). An indoor ramp connects this area with the Charge Storage and Preparation Building. Charge materials are transported via front-end loader up this ramp from the charge bedding area and deposited in the top of the furnace. This charging area is isolated from the other work areas in the SB Furnace Building by a concrete floor.

The top of the SB furnace is provided with an exhaust hood which continually controls emissions from the furnace top. Figure 10 shows a sketch of the SB furnace charging hood. This hood is part of the integrated ventilation control system which is schematically shown in Figure 11.

Performance of the ventilation system is monitored through use of sensing devices (static pressure, temperature) which are connected to an operator's control panel located on the process control room on the ground level of this building. Additionally, closed circuit TV cameras are trained on the charging hood with TV monitors provided in the process control room. This TV system can be used to monitor the performance of the charging hood and also determine the need to add more material to the furnace.

Aside from the front-end loader operator, no employee routinely works in the SB furnace charging area.

SB Furnace Operating Area

Most of the work involved in operating the SB furnace is performed in the ground level work area of the SB Furnace Building. A sketch of this work area is shown in Figure 12. As can be seen from the figure, the process or operator's control room is located on this level together with the lower portion of the SB furnace.

All of the activities normally performed at the base of a vertical shaft smelting furnace are performed in this work area. Slag and finished hard lead are tapped from the furnace into receiving ladles or crucibles. Emissions from these operations are controlled by local exhaust ventilation hoods which are part of the integrated ventilation system for the SB furnace previously referred to in Figure 11.

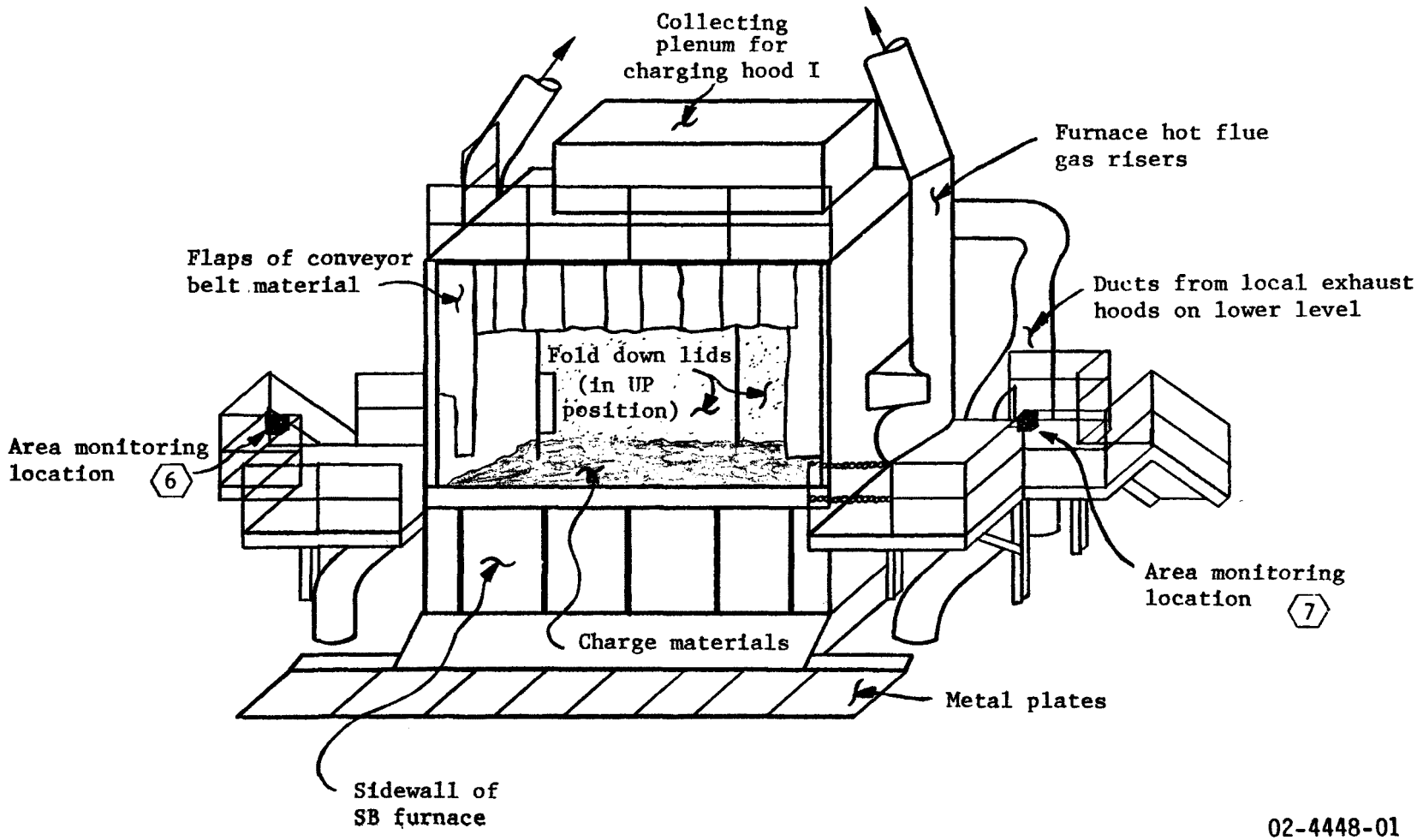

Figure 10. Furnace charging hood (Hood I).

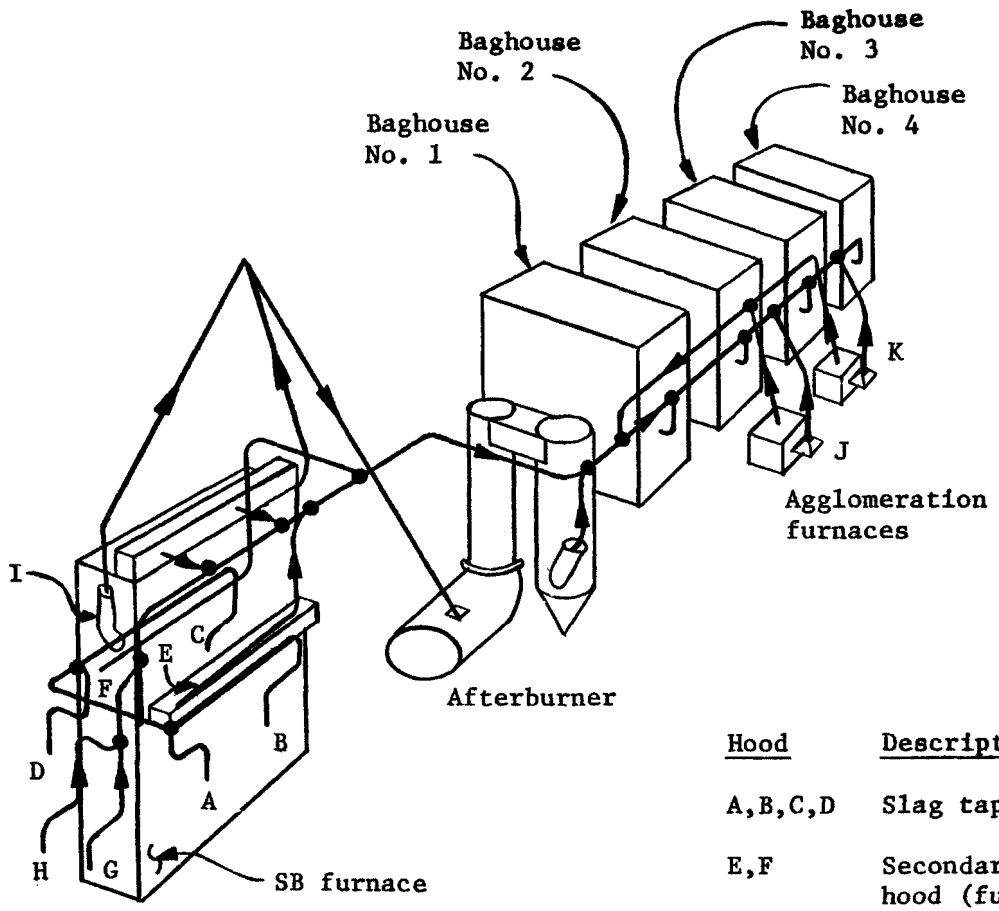

Hood	Description
A,B,C,D	Slag tapping hood
E,F	Secondary slag tapping hood (fugitive emission plenum)
G	Finished metal tapping hood
H	Finished metal ladle cooling hood
I	Charging hood
J,K	Agglomeration furnace ladle hood

Figure 11. Key to local exhaust ventilation hoods associated with SB furnace and agglomeration furnaces.

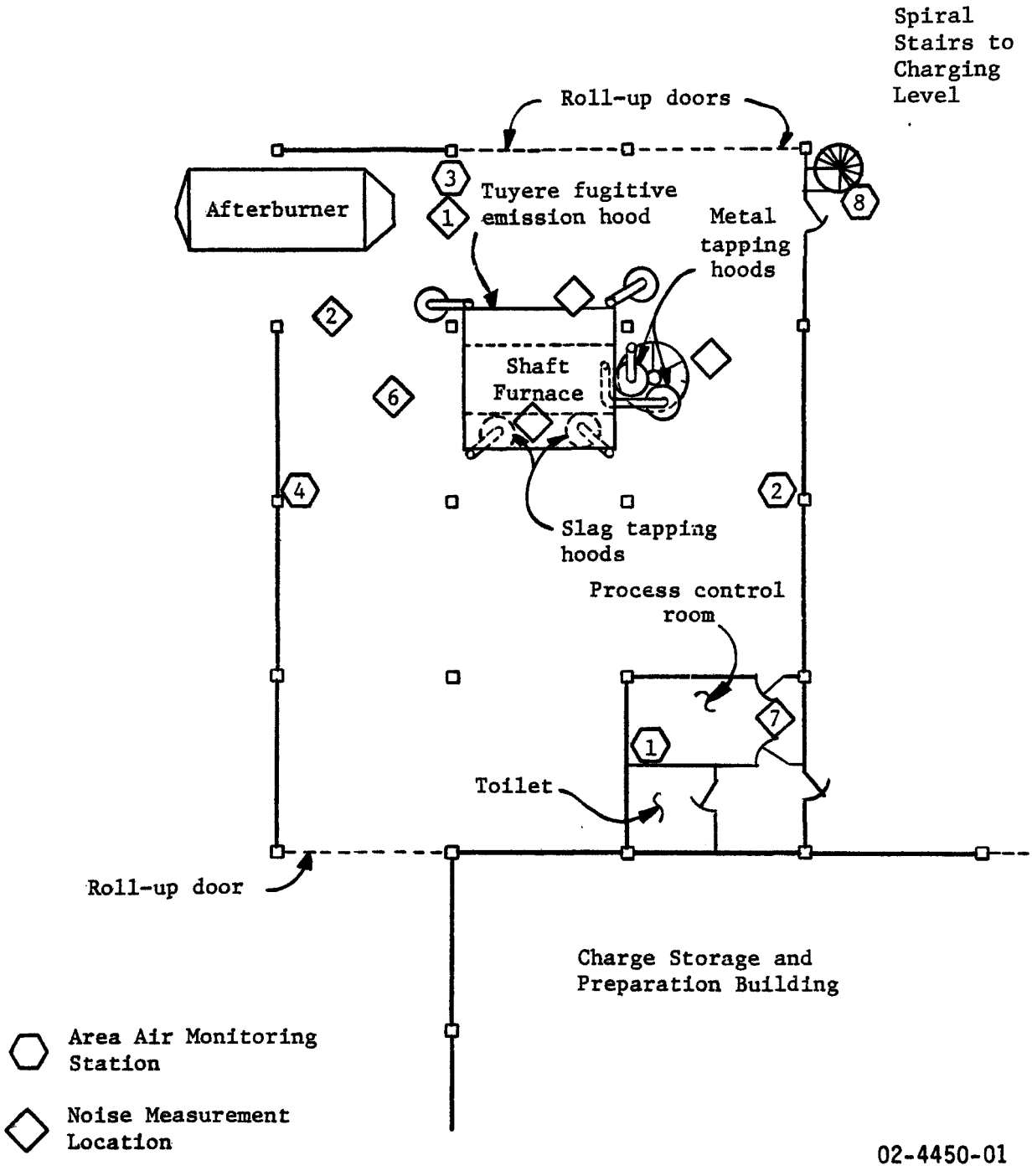

Figure 12. SB furnace ground level work area, SB furnace building.

Figure 13 shows an overview of the local exhaust ventilation controls associated with the base of the SB furnace. Hood F assists in the capture of emission from slag tapping and from tuyere punching operations.

Slag and finished metal ladles are handled by forklift truck. The floors in this operating area are frequently washed down through use of a water hose. The four furnacemen and one furnace foreman do not wear respirators while working in this area though they are accessible for emergencies.

The process control room is located adjacent to this work area. It is not equipped with special filtered ventilation and opens directly to the process work area. Furnace operating personnel spend varying amounts of time in the control room where consumption of beverages and smoking is permitted.

Also located in this general work area is the oil-fired afterburner for the SB furnace flue gas control system (refer to Figures 11 and 12). No controls other than the process ventilation system are provided for this afterburner. The final stages of the afterburner allow entry of dilution air for cooling and pressure relief in the event of explosion. Agglomerated material from the afterburner is collected in a slag ladle and emptied as necessary.

SB Furnace Integrated Ventilation System

Several references have already been made to the integrated ventilation system for the SB furnace as depicted in Figure 11. The system is "integrated" in that it handles both furnace flue gases and air collected by local exhaust ventilation hoods.

The SB furnace uses preheated blast air which is injected into the furnace through the tuyeres shown in the sketch in Figure 13. The flue gas stream beyond the smelting zone in the furnace rises and is collected by a header (doghouses) just below the charging level in the furnace. The flue gases captured by these doghouses are ducted away from each side of the furnace as shown in Figures 10 and 11. Each of the flue gas risers is steeply angled to an apex where the two streams merge and flow down to the afterburner located at ground level. The steep inclination of these ducts reportedly makes them self cleaning, however, occasional cleaning may be required.

After being processed through the afterburner, where some dilution air enters, the flue gas stream is combined with the air drawn in through the local exhaust ventilation hoods. The quantity of local exhaust air mixed with the flue gas stream is regulated to keep the stream temperature below 130 °C (266 °F). Shortly thereafter this air stream is joined by the flue stream from the flue dust agglomeration furnaces and then is processed through baghouse filters. The baghouses are equipped with doors for cleaning and bag replacement. Following the baghouses the exhaust stream is pulled through large exhaust fans and then ducted to a tall stack.

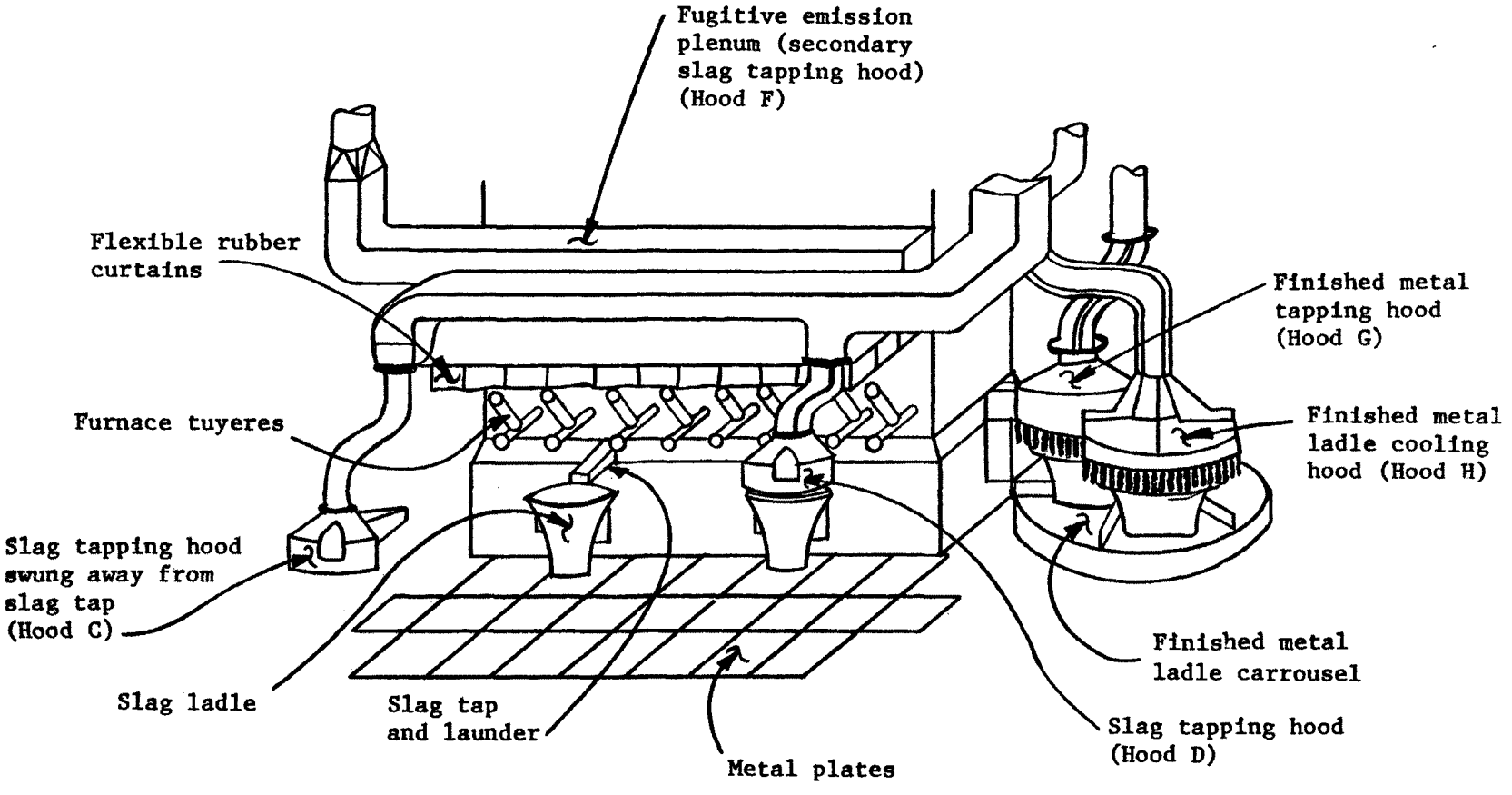

02-4451-01

Figure 13. Overview of exhaust ventilation controls for the tapping of slag and finished metal.

Flue Dust Handling

Flue dust collected in the baghouse filters is screw conveyed to the agglomeration furnaces shown in Figure 11 and Plate 4. As stated earlier, the flue gas emissions from these furnaces are collected by the integrated ventilation system. Local exhaust ventilation in the form of a canopy hood is provided over the slag ladle as shown in Figure 14.

As slag ladles are filled with agglomerated flue dust, they are removed by forklift truck. The agglomerated material is stored inside to prevent it from weathering and returning to a dust form.

DESCRIPTION OF EMISSION SOURCES AND POTENTIAL EXPOSURE

Materials Handling Emissions

At this smelter there are several situations where employees can be exposed to contaminants emitted by materials handling. The following paragraphs describe these situations, the employee interaction with the emission source and the control of the source.

Receipt of materials--

Off loading and handling of raw materials can generate airborne contamination. A varying number of employees may participate in raw material receiving at this smelter. Usually an equipment operator is involved who may be the individual assigned to the Charge Storage and Preparation Building or a person who routinely operates a front-end loader in the yard areas of the plant. Occasionally, a general laborer or other person may assist in raw material unloading.

As stated earlier the yard area is paved and kept wet. Prompt attention to moving received materials to their respective inside storage areas is exercised. At the time this evaluation was conducted, scrap batteries were also stored in piles outside the Charge Storage and Preparation Building. Employees do wear respirators when handling dusty materials. One of the front-end loaders is equipped with a filtered, air-supplied cab. Contamination tracked into the cabs of front-end loaders is periodically cleaned by flushing the cabs with water sprayed from a hose. Hoses are also used to flush the yard area with water to remove heavy mud accumulations. Additionally, the yard is routinely swept with a large mechanical wet sweeper and wetted using a sprinkler truck.

Storage and Handling of Charge Materials--

At this smelter charge materials are largely stored and handled inside. Contamination generated by handling charge materials is largely confined to the Charge Storage and Preparation Building. Stockpiles of materials within the building are kept wet. One employee utilizes a front-end loader with a filtered, air-supplied cab to move materials. Contamination tracked out of this building by the front-end loader is controlled by the routine yard clean-up procedures.

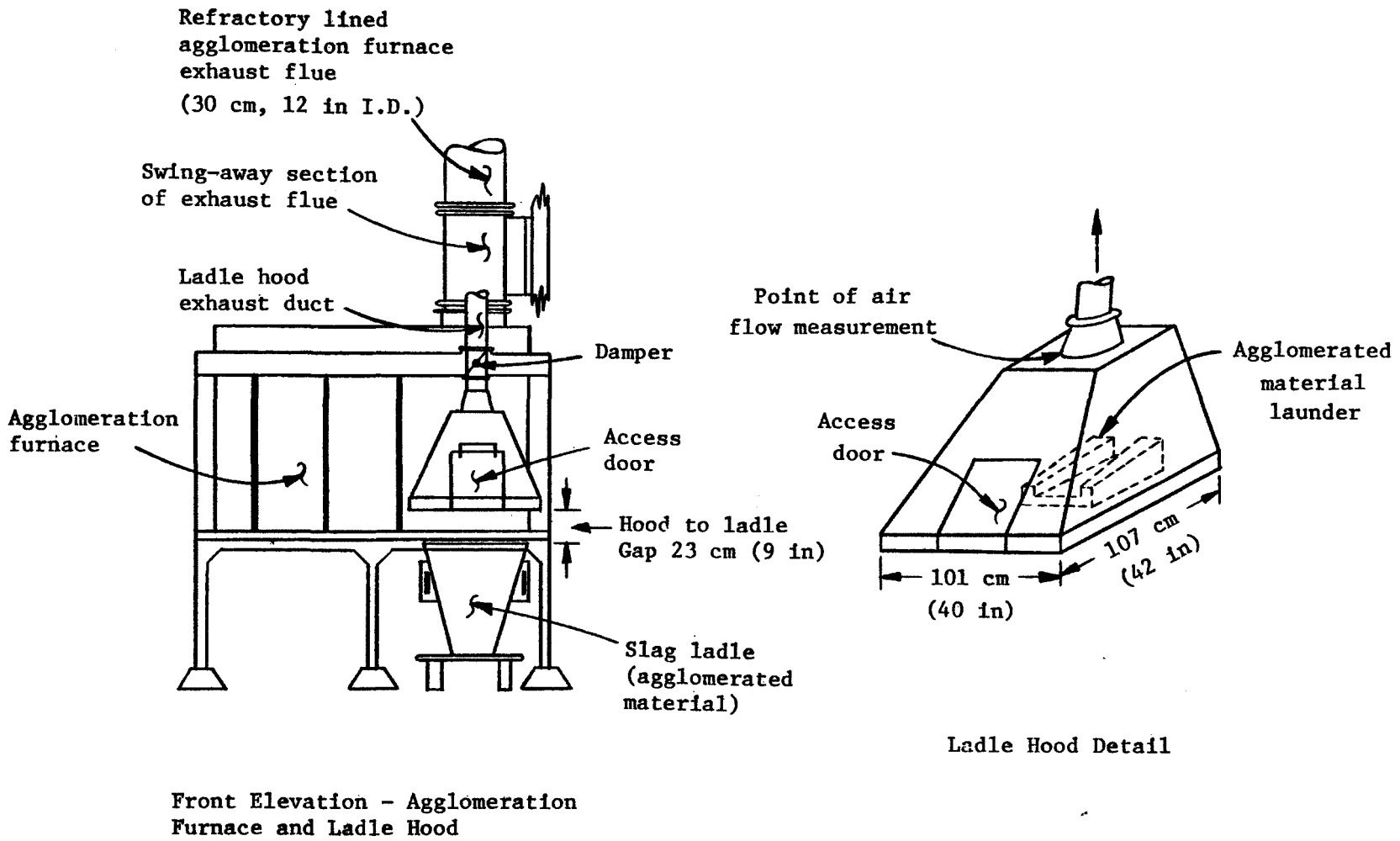

Figure 14. Agglomeration furnace and ladle hood (Hoods J and K).

this building by the front-end loader is controlled by the routine yard clean-up procedures.

Slag Handling--

When slag ladles are filled from the SB furnace, they are allowed to remain under the slag tapping hoods (refer to Figure 13) until the slag has cooled sufficiently to form a thick crust. The ladles are then moved by lift truck out of the operating area to a final cooling area shown in Figure 9. Here the ladles cool until the slag completely solidifies. Later a lift truck dumps the slag out of the ladles in the paved yard area provided for that purpose (refer to Figure 9). Still later, a front-end loader is used to separate the slag from the matte which forms in the very bottom of the slag ladle. This same front-end loader moves the slag and matte to separate outdoor storage piles.

The procedures described above are directed at minimizing potential fume emissions from molten slag and dust emissions from handling solidified slag. Intimate employee contact with slag and matte materials is precluded by use of mechanized materials handling equipment which does not create significant granulation of slag materials. Wetted operating floors and yard areas help prevent settled dust from becoming airborne. Some fume emission may be occurring from the slag ladles at their final cooling station. No control of this possible emission source is present. Employees do not routinely work near the cooling slag ladle.

Finished Metal Handling--

When finished metal ladles are filled from the SB furnace, they are allowed to remain under the finished metal ladle cooling hood (refer to Figure 13) until the metal has substantially solidified. Allowing the ladles to cool under the local exhaust ventilation rather than in the open air helps to reduce the fume emissions during cooling and during any handling of the ladle while the metal is still molten. The ladle is then moved outside by forklift truck. Later, the metal ingot is elevated from the ladle using a forklift truck as a hoist. The metal ingots are stockpiled in the yard area until shipped or transported to refining operations.

Flue Dust Handling--

Flue dust which collects in the baghouse is screw conveyed to the agglomeration furnaces. Screw conveyors can be a potential emission source since they tend to leak near rotating shafts, bearings, access doors or lids, etc. At this smelter, settleable particulate which escapes the screw conveyors will fall to a paved area below the baghouses and/or near the agglomeration furnaces. Here the dust would be wetted and eventually flushed into drains and sumps. Nonsettleable particulate which escapes from the screw conveyors would contribute to general ambient contamination.

The agglomerated dust is slag-like in appearance. It is handled by forklift truck while contained in slag ladles. It is not permitted to weather outside which would result in its return to a dusty state. Employees are not routinely assigned to work in areas near the agglomeration furnaces.

Residues from Drains and Sumps--

The paved yard surfaces and floors inside operating areas are slopped to drains and sumps. These water collection points are routinely cleaned to remove deposits of mud. Given the wetted nature of the material dust generation is not an immediate hazard. Splashes of particulate laden water, if allowed to dry on work clothing, tools or work surfaces, could become a source of airborne contamination.

The deposits or residues from these sumps are recycled to the smelting process to recover their lead content. These materials are stored indoors and kept wetted until charged to the smelting furnace.

Residues from Furnaces, Flues and Ductwork--

Routine maintenance at this smelter includes cleaning dusts and residues from flues and ductwork. These periodic cleaning procedures create opportunities for employee exposures. Employees do wear respirators during these cleanup operations, some of which take place on a weekly basis.

When the entire SB furnace is shut down, the furnace cavity, flues, ductwork, etc. are cleaned, inspected and repaired. These maintenance activities can generate emissions and the handling of residues also involves potential exposures. Employees are required to wear respirators during these activities. Furnace shutdown periods have ranged in length from a few days to a dozen or more days depending on the extent of maintenance required.

Charging Emissions

The depositing of material in the top of the furnace can potentially expose employees to (1) emissions from handling the charge material, and (2) emissions from the furnace, such as flue gases which escape from the furnace top. Both of these emissions would emanate from Hood I shown in Figure 10.

As stated earlier, only one employee spends any significant amount of time in the furnace charging area. This employee operates a front-end loader equipped with a cab supplied with filtered air.

Slag Tapping

Slag is tapped at each of four slag tap holes provided at the base of the furnace. Each of these tap holes is equipped with a short launder. A sketch showing the approximate location and configuration of the slag tap holes is shown in Figure 13.

Slag is tapped from each of the four tap holes. Tapping involves removing the tap hole plug and allowing the slag to flow down the launder into a slag ladle. Unique tap hole plugs are used at this smelter which consist of a tapered wooden plug surrounded by a refractory clay (refer to Figure 15). This plug is placed in the tap hole and tamped tight. A small amount of clay is added behind the plug. When the furnace is tapped a bar is used to punch out the wooden core of the plug. Once the center is clear, the hole can be easily enlarged by dislodging the surrounding clay portion of the plug. This technique eliminates the need for drilling

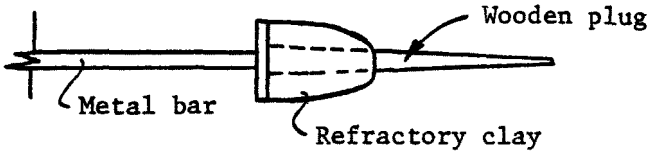

Slag Tap Hole Plug

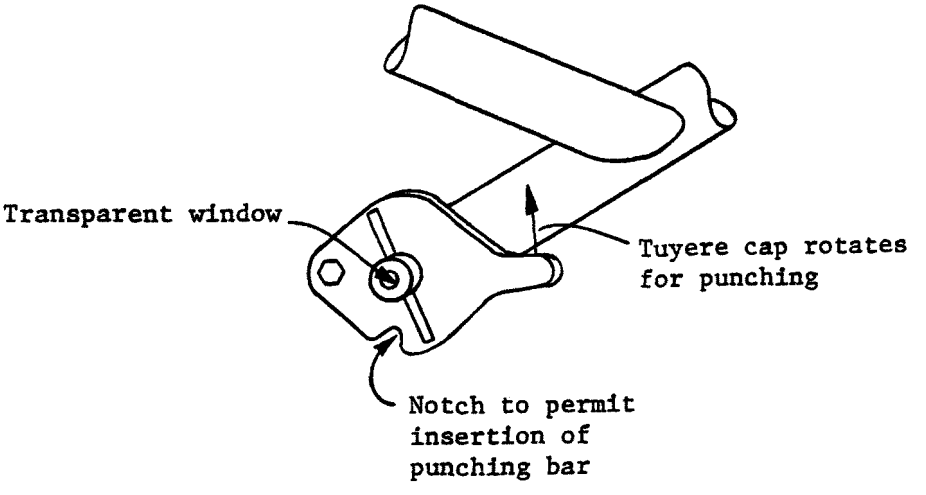

SB Furnace Tuyere

Figure 15. Details of slag tap hole plug and tuyere design.

02-4453-01

out tap holes, using sledge hammers, etc. and insures that the tap hole perimeter will remain intact and not emit excessive quantities of furnace gases.

The slag tapping operation just described can be performed through an access door in the hoods provided for slag tapping. A slag ladle is positioned under the tap hole. The slag tapping hood is moved into position over the ladle and slag launder, and the tap hole plug is removed allowing the slag to flow into the ladle. When the ladle is filled, a new plug is installed by feeding it through the access door in the slag tapping hood (refer to Figure 13). The ladle remains under the tapping hood until a substantial crust forms.

The movable slag tapping hoods (Hood A, B, C, D) and the secondary slag tapping hoods (Hoods E and F) have been provided to control emissions from slag tapping (refer to Figure 13). Employees do not wear respirators during slag tapping but do utilize face shields, gloves, etc. Slag taping is a routine task for the furnacemen assigned to this work area. Slag tapping is almost a continuous operation with one of the four taps flowing slag every ten minutes.

Tuyere Punching

A sketch of the SB furnace tuyeres is shown in Figure 13 with a detail of an individual tuyere shown in Figure 15. Routine tending of the furnace involves examination of each tuyere through the transparent window shown Figure 15. Periodically the tuyere cap is rotated and a steel bar is inserted to punch out the air flow passage. The secondary slag tapping hoods (Hood E and F) are provided to help control any emission from the tuyere punching activity. Tuyere punching is a routine task for the furnacemen assigned to this work area. Tuyeres are examined and punched as necessary at varying intervals throughout the workshift.

Finished Metal Tapping

Finished metal is tapped at one end of the SB furnace as shown in Figure 13. The molten metal is an obvious source of contaminant emission. Exhaust hoods have been provided for the finished metal tap hole, launder and receiving ladle (Hood G, Figure 13) and for the filled receiving ladle as it cools (Hood H, Figure 13).

Tapping of the furnace can be performed with Hood G in position over the tap hole, launder and ladle. One of the four furnacemen usually tends to the finished metal tapping operation which is nearly continuous. As the ladles are filled and rotated under the cooling hood (Hood H) the furnaceman swings Hood H away for a few moments so he can insert steel lifting handles into the molten finished metal. No control for employee exposure during this handle insertion is provided.

Afterburner Slag Port

The afterburner is equipped with a slag port which empties into a slag ladle. No control is provided for fume emissions which may emanate from this source. The afterburner slag tap port is located near the work area where furnacemen prepare the slag tap hole plugs. There is a potential for some exposure from this source. In comparison to other emission sources in this general work area, the afterburner slag tapping port should be classed as a low-order emission source.

Agglomeration Furnaces

The agglomeration furnaces are located outdoors in an area not frequently visited by employees. The flue gas streams from these agglomeration furnaces and emissions from the slag launder and ladle can contribute to ambient air contamination. The flue systems for these furnaces are cleaned at weekly intervals. The swing away section of the flue directly above each furnace was designed to facilitate this periodic cleaning (refer to Figure 14). A local exhaust ventilation hood is provided for the slag ladle and launder. Possible emissions from these furnaces are not expected to significantly contribute to employee exposures on a day-to-day basis.

Baghouse Bag Replacement

Manual replacement of bags during preventative maintenance or repair work in the four baghouses creates the potential for employee exposure. There is sufficient baghouse capacity at this smelter to allow shutdown of one baghouse while the other three remain in operation. Workmen who perform bag changes are required to wear respirators.

ENGINEERING CONTROL EVALUATION

Engineering control of employee exposure to lead and other contaminants at this smelter was evaluated using three basic sources of information:

- Engineering measurements and design considerations
- Observations
- Air sampling information

The sampling and analytical techniques used are NIOSH recommended physical and chemical analytical methods document 173 (P&CAM 173).

Raw Materials Handling

Engineering Measurements--

The engineering controls of interest to raw materials handling are: (1) the use of sprinklers to suppress dust levels in yard areas, (2) the use of a front-end loader with filtered air supply to handle raw materials, and (3) the provision of a materials storage and preparation building to confine and suppress airborne contamination associated with raw materials handling. These controls were evaluated through observation and air sampling.

Observations--

Yard areas were observed to be kept moist by both fixed and mobile sprinkling units. The floors of the Charge Storage and Preparation Building remained wet in may areas, damp in others. Movement of the front-end loader within this building did not create generation of visible airborne dust. The front-end loader operator remained inside the filtered air cab except when reporting to the SB furnace control room and lavatory area. The doors and windows of the fron-end loader cab were kept closed. The roll-up doors to the Charge Storage and Preparation Building were opened and closed as necessary to allow flow of materials. Several roll-up doors were left open on the days evaluated.

Air Sampling--

To evaluate the effectiveness of the raw materials handling procedures employed at this smelter, several air samples were gathered and analyzed. The results of this air sampling are shown in Tables 20 and 21.

Air samples collected inside the cab of the front-end loader (Table 20, Charge Preparation and Chargeman) indicate lead-in-air concentrations of 85 and 58 $\mu g/m^3$ on consecutive days. The initiation of sampling on the second day was delayed until a flat tire on the front-end loader was repaired.

Two samples collected along the wall of the Charge Storage and Preparation Building (Table 21, Area No. 5, see also Figure 9) indicated lead-in-air concentrations of 24 and 16 $\mu g/m^3$. Additionally, air samples gathered at either side of the charging hood (Table 21, Area Nos. 6 and 7, see also Figure 10) indicated lead-in-air concentrations of (79 and 71) and (65 and 85) $\mu g/m^3$, respectively. These samples reflect both the effectiveness of dust control in the Charge Storage and Preparation Building and the effectiveness of Hood I (Figure 10) in controlling emissions from charging and fugitive flue gas emissions.

One air sample was gathered outside near an area of materials receiving (Table 21, Area NO. 8; see also Figure 12). The sample indicated that the lead-in-air concentration for the period evaluated was less than 8 $\mu g/m^3$. This sample result should not be interpreted as establishing an ambient background.

TABLE 20. BREATHING ZONE, LEAD-IN-AIR CONCENTRATIONS ASSOCIATED WITH SB FURNACE OPERATIONS*

	Sampling interval	Lead-in-air exposure $\mu g/m^3$ during the interval sampled
9-26-78		
Blast furnace Foreman (JA)	6:21a - 10:57a	99
Furnaceman (IM)	7:34a - 1:33p	43
Furnaceman (LA)	6:15a - 1:37p	57
Furnaceman (EJ)	6:18a - 1:38p	83
Furnaceman (HP)	6:16a - 1:38p	14
Charge prep. & chargeman (DA)	7:03a - 1:40p	85
9-27-78		
Blast furnace Foreman (JA)	6:08a - 12:23p	110
Furnaceman (MA)	6:00a - 1:43p	35
Furnaceman (CO)	6:03a - 1:50p	110
Furnaceman (MD)	6:05a - 1:44p	38
Furnaceman (BB)	6:17a - 1:49p	79
Charge prep. & chargeman (DA)	8:07a - 1:55p	58

*Samples were collected on cellulose ester membrane filters with 0.8 μ pore size and were analyzed using atomic absorption spectrophotometry (P & CAM 173).

TABLE 21. WORK AREA LEAD-IN-AIR CONCENTRATIONS ASSOCIATED WITH OPERATION OF THE SB FURNACE

Area no.	Sampling location[a]	Sampling interval	Lead-in-air exposure $\mu g/m^3$ during the interval sample
9-26-78			
1	Process control room	6:24a - 1:50p	38
2	At wall near lead tapping end of furnace	6:30a - 1:50p	23
3	At wall near afterburner	6:43a - 1:50p	<10
4	At wall near tapping plug preparation area	6:35a - 1:51p	15
5	At side wall near center of charge preparation building	6:56a - 1:55p	24
6	At working platform on left side of charging hood	6:48a - 11:30a	79
7	A working platform on right side of charging hood	6:50a - 11:30a	65
8	Near spiral stairs to charging level	--	--
9-27-78			
1	See location descriptions above	6:00a - 1:55p	54
2		6:12a - 1:45p	22
3		6:33a - 1:58p	16
4		6:22a - 1:58p	22
5		6:36a - 1:55p	16
6		6:07a - 2:00p	71
7		6:07a - 2:00p	85
8		6:41a - 2:00p	<8

*Samples were collected on cellulose ester membrane filters with 0.8μ pore size and analyzed by atomic absorption spectrophotometry (P & CAM 173).

[a]Refer to Figures 9, 10 and 12.

SB Furnace Integrated Ventilation System

Engineering Measurements--

The evaluation of the integrated ventilation system (see Figure 11) involved measurement of air flows at several strategic points. It was not feasible to make measurements at every point of interest in the system. Physical access was the primary constraint in this regard.

Figure 16 shows the points at which ventilation measurements were made. Table 22 summarizes the hood entry coefficient measurements. Pressure and temperature measurements were made at each point indicated in Figure 16. However, these measurements and the resultant flow and velocity calculations were considered proprietary and are not reported here. These ventilation rates were consistent with those which would be specified using appropriate design procedures as outlined in the ACGIH ventilation. Where appropriate, hood entry coefficients were estimated and are presented in Table 22. These measurements were made with all four baghouses in operation. Performance data concerning each of the many local exhaust hoods was gathered and will be presented in succeeding sections.

Observations--

The integrated ventilation system was observed to be in good repair. No serious dents or malformations of ductwork were found. The system is constructed of heavy gauge steel and is provided with access openings at strategic locations. The system is equipped with sensing devices (mainly temperature indicators) which relay information to the control panel in the process control room.

The SB furnace superintendent is thoroughly familiar with the design and performance of the system and routinely makes velocity traverses in key locations using a pitot tube and manometer. The process is equipped with static pressure and temperature sensing devices which can be monitored from the process control room. The baghouses are equipped with manometers so that bag loading, broken bags, etc. can be detected by operating personnel.

Air Sampling--

The integrated ventilation system works as a unit to control lead-in-air levels within the SB Furnace Building. Many of the emission sources controlled by the system are physically close together. Employees who work in this building spend varying amounts of time at different locations. For these reasons the results of air sampling performed during this evaluation (breathing zone and work area) are more indicative of total system performance and work practices than of performance of individual hoods, etc.

During the days evaluated, the roll-up doors to the ground level operating area of the SB Furnace Building remained open much of the time. Two consecutive day shifts were monitored. A furnaceman crew change occurred between the first and second day of evaluation so possible differences in work habits are reflected in the data gathered.

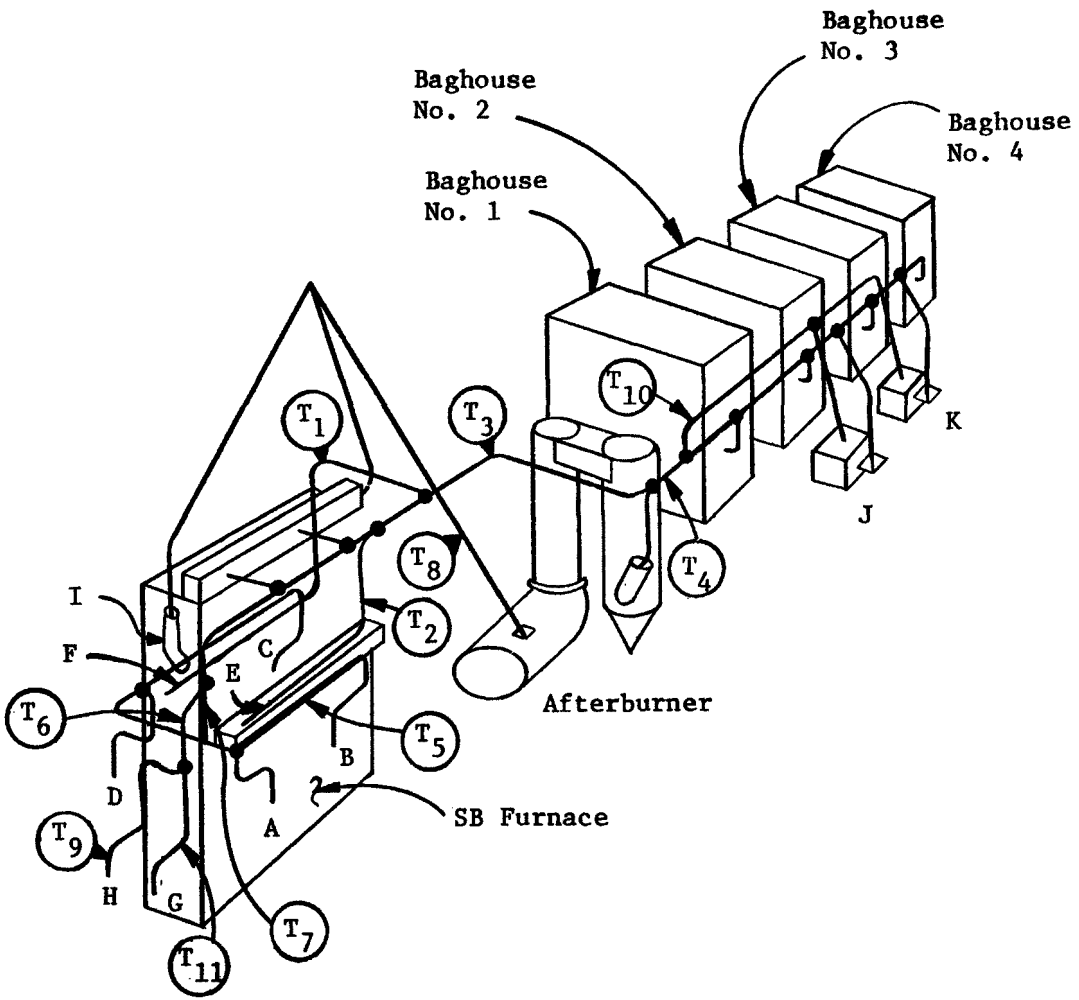

Figure 16. Key to ventilation system test points.

02-4454-01

TABLE 22. SUMMARY OF HOOD ENTRY COEFFICIENTS IN SB FURNACE AND AGGLOMERATION FURNACES VENTILATION SYSTEMS*

	Hood entry coefficient Cs***
T_1	0.58
T_2	0.56
T_3	
T_4	
T_5	0.57
T_6	
T_7	
T_8	
T_9	0.05
T_{10}	
T_{11}**	0.76

*Air flow measurements were made using a pitot tube and inclined manometer; in-duct velocities, flow rates, temperatures, and pressure data were considered proprietary and are not reported here.

**Calculated results

***$Cc = \sqrt{\frac{VP}{SP_h}}$, where SP_h = hood static pressure

Tables 20 and 21 contain the lead-in-air sampling data. Breathing zone measurements ranged from 14 to 110 $\mu g/m^3$ and average 67 $\mu g/m^3$ for persons working in the SB furnace operating area. Work area lead-in-air concentrations measured in the SB furnace operating areas ranged from less than 10 to 54 $\mu g/m^3$ and averaged 25 $\mu g/m^3$. It is interesting to note that the highest work area lead-in-air concentration in the SB furnace operating area was found in the process control room.

A few work area air samples were also collected and analyzed for arsenic. The results of this sampling are contained in Table 23. No result greater than 0.32 $\mu g/m^3$ was found.

SB Furnace Charging Hood (Hood I)

Engineering Measurements--

A sketch of Hood I is shown in Figure 10. Figure 17 contains dimensional information and air flow measurements. The hood provides a minimum of 0.76 m/s (150 fpm) across its face. An Alnor® Velometer, Jr. was used to measure face velocity.

Observations--

Smoke rising from the charged material inside the hood was observed to remain within the hood. Smoke generated at the edge of the hood and at locations in front of the hood face (using ventilation smoke tubes) indicated air movement into the hood at all positions.

Charging the furnace via the front-end loader was observed and no visible emissions were seen to escape from the hood.

Air Sampling--

Air samples were collected at the work platforms on either side of the charging hood (refer to Figure 10). The results of these measurements are contained in Table 21 and are only partially indicative of the hood's performance. These sampling results reflected general workroom contaminant levels in the charging work area, as well as, possible contamination escaping from the hood.

Slag Tapping Hoods (Hoods A, B, C, D)

Engineering Measurements--

The SB furnace is equipped with four slag tapping hoods (Hoods A, B, C, D). These hoods are ducted into the integrated ventilation system as shown in Figure 11. These hoods work together with other exhaust ventilation as shown in Figure 13. The hoods are essentially identical in design. All are constructed from heavy metal, employ external duct fins or webs for structural support and are made movable through use of high quality swivel bearings. Figure 18 provides dimensional information concerning these hoods and air flow data. An Alnor® Velometer was used to evaluate air flows associated with these hoods.

TABLE 23. WORK AREA ARSENIC-IN-AIR CONCENTRATIONS ASSOCIATED WITH OPERATION OF SB FURNACE*

Area no.	Sampling location[a]	Sampling interval (9/27/78)	Arsenic concentration $\mu g/m^3$ during the interval sampled.
2	At wall near lead tapping end of furnace	6:12a - 1:45p	0.32
3	At wall near afterburner	6:22a - 12:22p	0.15
6	At working platform on left side of charging hood	6:17a - 2:00p	0.11

*Samples were collected on a cellulose ester membrane filter with 0.8 μ pore size and were analyzed using the arsenic/borohydride method. (Pierce, et al; Applied Spectroscopy, (30), 1976)

[a]Refer to Figures 2 and 4.

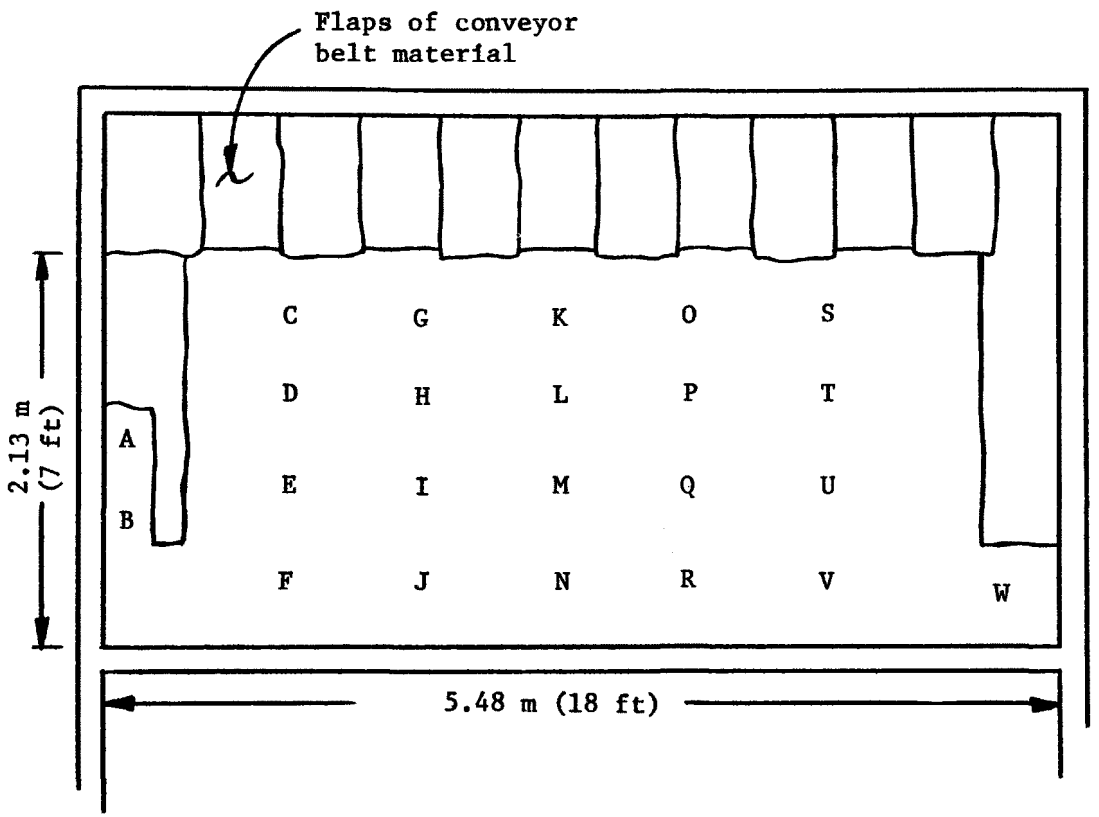

Face Velocity Measurements

Pt	m/s	fpm
A	1.0	200
B	1.0	200
C	1.5	300
D	1.5	300
E	1.3	250
F	0.89	175
G	0.89	175
H	0.89	175
I	0.89	175
J	1.0	200
K	1.0	200
L	1.0	200
M	1.0	200
N	1.0	200
O	1.0	200
P	1.0	200
Q	0.76	150
R	0.76	150
S	1.0	200
T	1.0	200
U	1.0	200
V	1.0	200
W	0.76	150

Figure 17. Face velocity measurements - furnace charging hood (Hood I).

02-4455-01

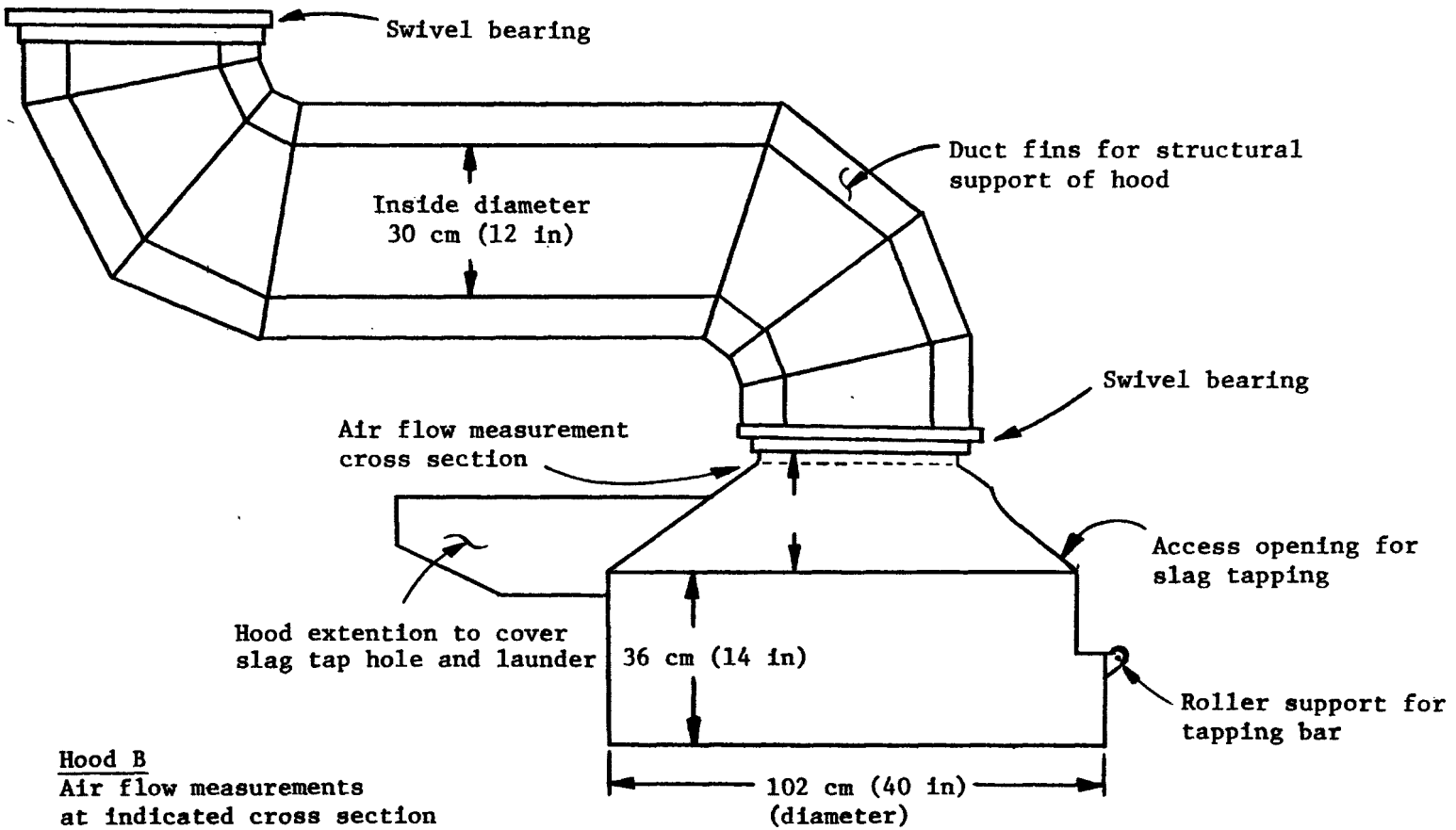

Hood B
Air flow measurements
at indicated cross section

$A = 0.0707\ m^2 (.785\ ft^2)$

Hood Entry Coefficient
$Ce = 0.57$

02-4456-01

Figure 18. Side elevation - slag tapping hoods (Hoods A,B,C,D).

Figure 19 illustrates the relationship of the slag hoods to the slag ladles. Air velocities measured at the access opening and along the gap between the hood and ladle are indicated. As can be seen from the data, these hoods afford vigorous face velocities.

Observations--

The slag tapping hoods were used by all furnacemen. As stated earlier, the slag tap holes at the side of the SB furnace can be opened and closed through use of implements inserted through the access opening in the slag tapping hood. Several tap hole opening and closing operations were observed. The hoods appeared to capture virtually all smoke and fume emanating from the tap hole, slag launder and slag ladle. Occasionally a heavy spark of molten material would escape through the front access opening.

Uniform flow into the slag hoods at all sides was confirmed through observation of smoke generated from ventilation smoke tubes.

Employees performing slag tapping operations always remained at least 1 to 2 meters (3 to 6 feet) from the hoods during tapping. Opening, closing and tending of the tap hole was accomplished through use of long metal rods and other long handled implements.

After slag ladles were filled, they were allowed to remain under the slag tapping hoods until a substantial crust had formed on the top of the molten slag. During the two days evaluated, no accidental spills of slag occurred. Furnacemen carefully maneuvered slag ladles using a forklift truck. In some instances ladles were removed with the slag tapping hood still in position over the tap hole and launder.

Secondary Slag Tapping Hoods (Hoods E and F)

Engineering Measurements--

The SB furnace is equipped with two secondary slag tapping hoods (Hoods E and F) located along either side of the furnace. These hoods are ducted into the integrated ventilation system as shown in Figure 11. These hoods work together with other exhaust ventilation as shown in Figure 13.

Figure 20 provides additional information concerning these hooods. Data concerning air flow through the exhaust plenum is included in Table 22 (Test Point T_2). These hoods are intended to capture emissions from slag tapping and tuyere punching operations.

Observations--

Refer to Figure 20 for observations concerning hood performance.

Finished Metal Tapping Hood (Hood G)

Engineering Measurements--

Hood G is provided to control emissions from the finished metal tap hole, launder and receiving ladle. Hood G is ducted into the integrated ventilation system as shown in Figure 11. This hood works together with other exhaust ventilation as shown in Figure 13.

Face Velocity Measurements
at Access Opening

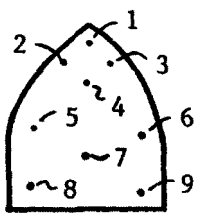

	Hood B		Hood D	
Pt	m/s	fpm	m/s	fpm
1	2.4	480	2.8	550
2	2.2	430	2.8	550
3	2.2	430	1.9	380
4	1.9	380	2.2	430
5	1.8	350	2.2	440
6	1.8	350	1.5	300
7	1.8	350	2.8	400
8	1.8	350	2.9	580
9	1.8	350	2.8	400

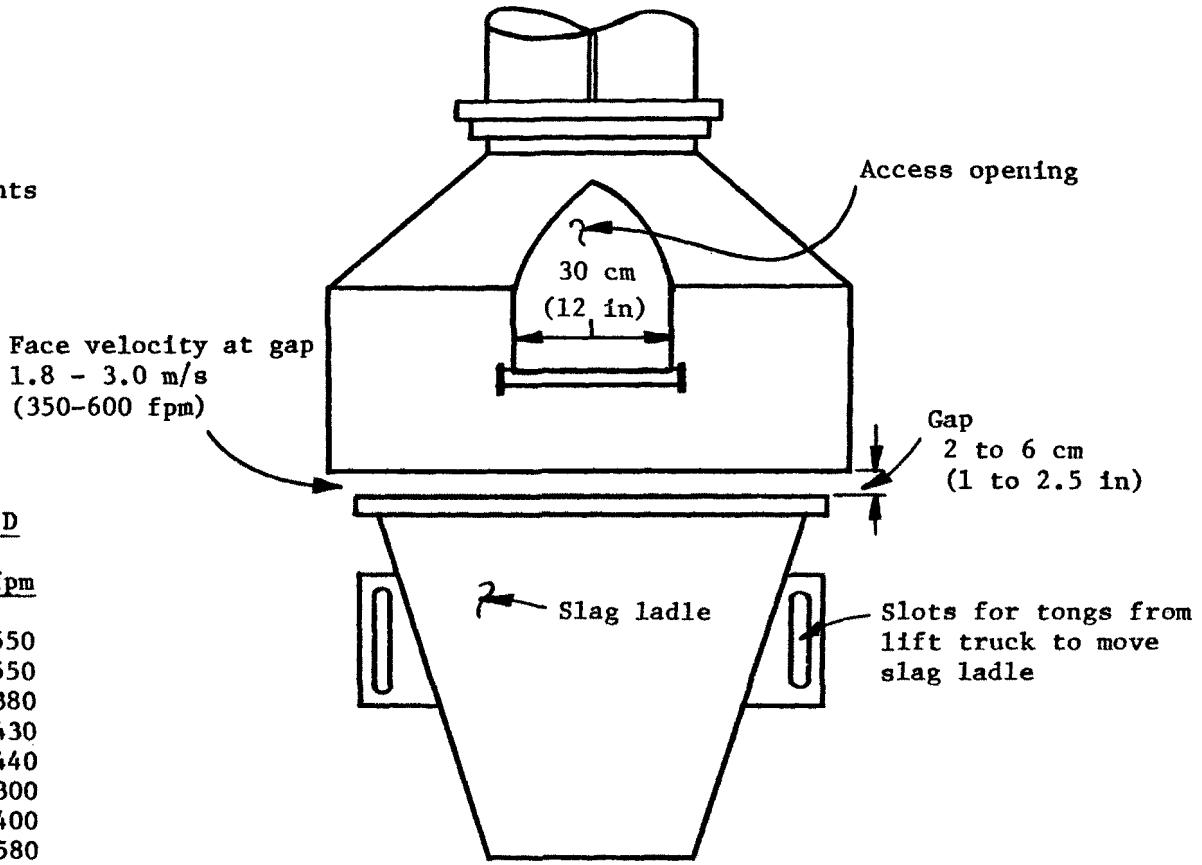

02-4457-01

Figure 19. Front elevation - slag tapping ladle (Hoods A,B,C,D).

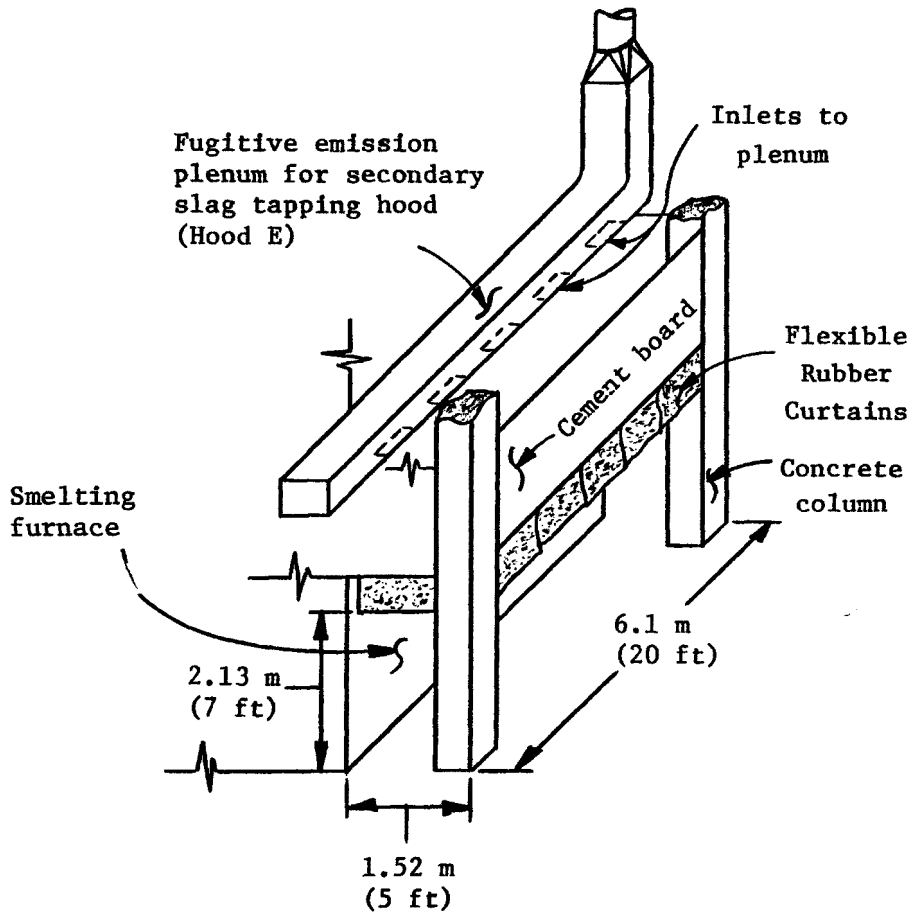

Air Flow Measurements

Hood Entry Coefficient
Ce = 0.56

- Air velocities near tuyeres and flexible rubber curtains were less than 0.13 m/s (25 fpm)
- Smoke generated inside the hood was observed to flow upward toward the exhaust plenum inlets
- Smoke generated near the flexible rubber curtains indicated low order turbulence on back side of curtains

Note: Details of slag ladles, slag tapping hoods, etc. are exluded from this figure for simplicity

02-4458-01

Figure 20. Secondary slag tapping hoods (Hoods E and F).

Hood G, like the slag tapping hoods, is constructed of heavy gauge metal and employs external duct fins or webs for structural support of the hood (refer to Figure 21). The hood is made movable through use of swivel bearings. The bottom edge of the hood is equipped with hanging chains to help control any splashing of molten metal, increase face velocity at the gap between the hood and ladle and facilitate rotation of ladles under the hood.

The access opening at the hood is used to observe and allow access to the finished metal tap hole.

Figure 21 provides dimensional information for Hood G. Face velocity measurements made at the access opening and near the hanging chains associated with the hood are indicated. An Alnor® Velometer was used to make these measurements. As can be seen from the data, Hood G provides vigorous air flow into the hood.

Figure 21 also contains calculated hood performance data. These data and others are also presented in Table 22 (Test Point 11). Flow into this hood was determined by taking the difference in flows measured at Test Points 6 and 9 shown in Figure 16.

Observations--

Hood G appeared to capture all of the smoke and fumes emanating from the finished metal tap hole, launder and receiving ladle. During the two days evaluated, Hood G was not moved from its position over the tap hole and launder. Smoke generated from ventilation smoke tubes at the edges of the hood indicated flow into the hood at all sides.

Occasionally a spark of molten metal was observed to escape from the front access opening. This usually occurred when the tap hole and launder were being cleaned through use of a long metal rod inserted through the access door.

Finished Metal Ladle Cooling Hood (Hood H)

Engineering Measurements--

Hood H is provided to control emissions from molten metal contained in a receiving ladle which has recently been filled. Hood H is ducted into the integrated ventilation system as shown in Figure 11. This hood works together with other exhaust ventilation as shown in Figure 13. Hood H like Hoods A, B, C, D, and G is constructed of heavy gauge metal and employs external duct fins or webs for structural support of the hood (refer to Figure 22). The hood is made movable through use of swivel bearings. The bottom edge of the hood is equipped with hanging chains to help improve face velocity and facilitate rotation of ladles under this hood.

As indicated in Figure 22, Hood H is a slotted hood. The slot evenly distributes the capture zone around the perimeter of the ladle. Air flow information gathered using a pitot tube and inclined manometer at Test Point T_9 (see Figures 16 and 22) is presented in Table 22 and in Figure 22.

Air flow measurements

Face velocity at gap
Near chains 1.5 m/s (300 fpm)
At front of hood in space with no chains 2.5 m/s (500 fpm)
Face velocity at access opening

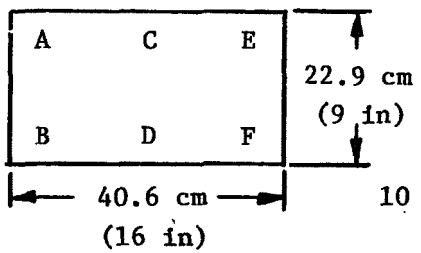

Pt	m/s	fpm
A	2.3	450
B	2.4	480
C	2.0	400
D	1.7	340
E	1.8	350
F	1.3	250

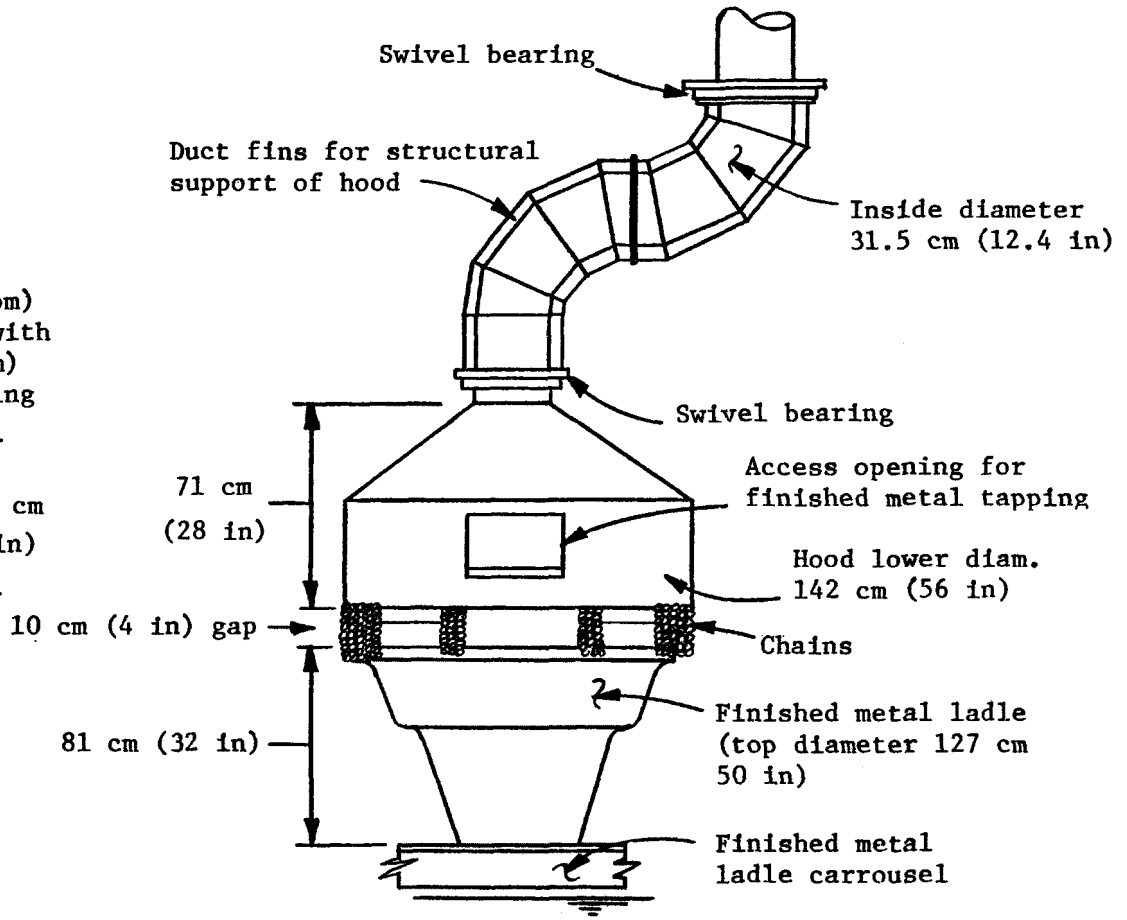

02-4459-01

Figure 21. Front elevation of finished metal tapping hood (Hood G).

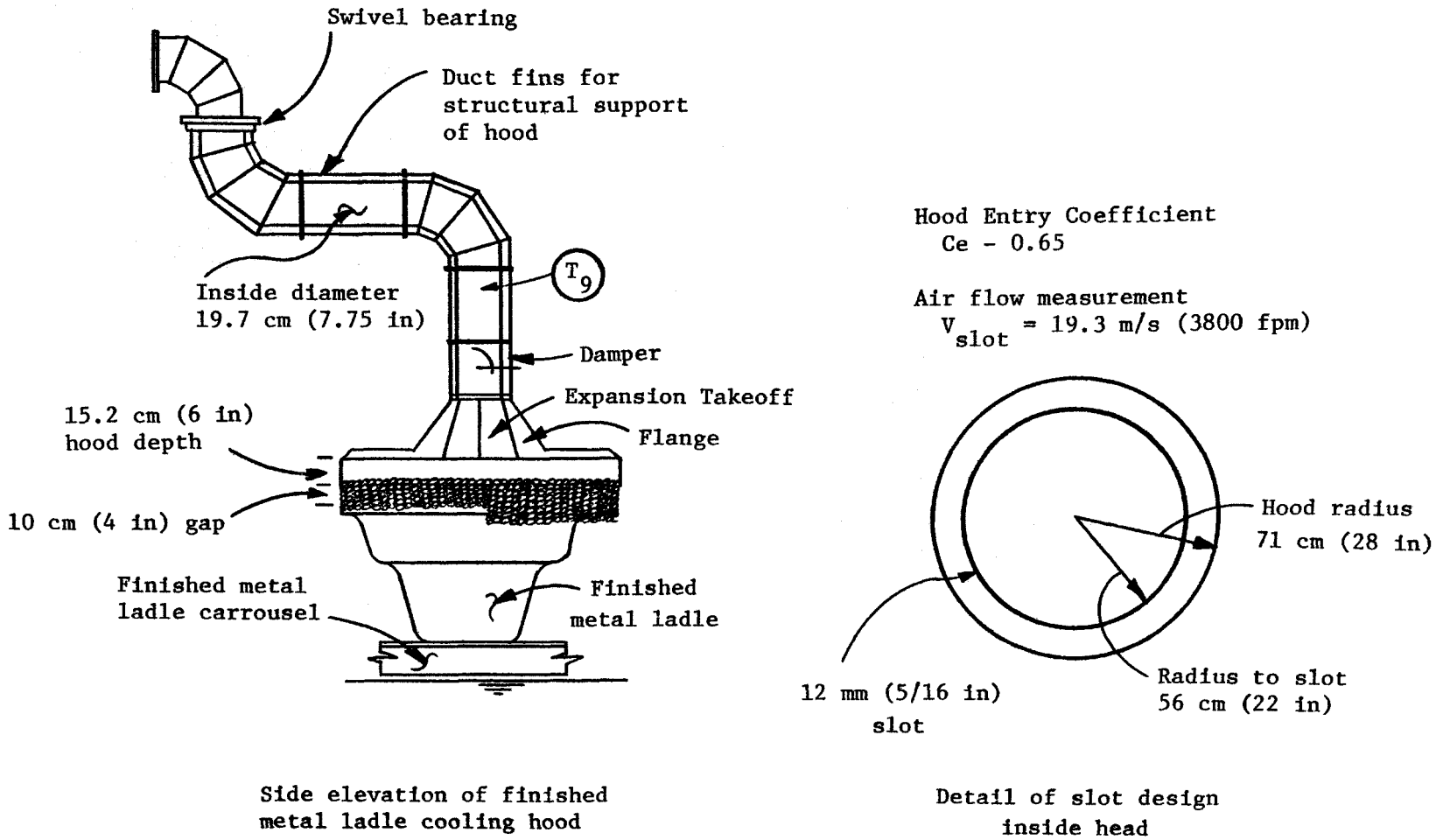

Side elevation of finished metal ladle cooling hood

Detail of slot design inside head

02-4460-01

Figure 22. Finished metal ladle cooling hood (Hood H).

Additionally, slot velocities and face velocities measured with an Alnor® Velometer are included in Figure 22.

Observations--

Ventilation smoke tubes were used to generate visible smoke at the edge of this hood. The smoke was observed to flow into the hood at all locations around its circumference.

Hood H was swung away from over the cooling ladle to allow insertion of handles into the molten metal. This operation required only a few moments to complete but did require the furnaceman to lean over the ladle containing cooling molten metal. The employee did not wear a respirator when performing this task which occurred a few times each shift.

Agglomeration Furnace Ladle Hood (Hoods J and K)

Engineering Measurements--

Hoods J and K are ducted into the integrated exhaust ventilation system as shown in Figure 11. Dimensional information and proximity to the agglomeration furnaces is shown in Figure 14. Also included in Figure 14 is an estimate of the air flow through these hoods.

Face velocity measurements were precluded by significant ambient air currents present on the days evaluated. Hi-vol area sampling near the agglomeration furnaces detected 12 and 18 $\mu g\ Pb/m^3$ on the test days (see Table 10, Section 4).

Observations--

The gap between the slag ladle and hood is quite large (refer to Figure 14). Smoke generated under and near the hood using ventilation smoke tubes was not effectively captured by the hood. Ambient air currents overpowered the influence of the hood and allowed generated smoke to escape.

OTHER INDUSTRIAL HYGIENE CONSIDERATIONS

Employee Work Schedules

The SB furnace operates continuously. Five teams of employees man three shifts of work. Each employee works an average of 36 hours per week.

Personal Protective Equipment

Clean trousers, shirts and work jackets are furnished each week to employees. Employees provide and wash their own underwear. Use of gloves, safety helmets and safety glasses is optional. Employees wear safety-toe footwear and utilize faceshields during slag tapping. Respirators are required to be worn during furnace clean-up or repair, baghouse maintenance, and during routine flue and duct cleaning. The charge preparation operator does not normally wear a respirator. He may elect to wear one during handling of particularly dusty materials which are occasionally received by the smelter.

Employee Hygiene

Employees are instructed to shower at the conclusion of each shift and to wash before eating. Locker room, shower and lunchroom facilties provided at this smelter are not elaborate. Employees are permitted to smoke and consume beverages in the SB furnace process control room. It was observed that employees did not wash their hands each time they used smoking materials or consumed beverages in this area.

Biological Monitoring

Urine specimen collection and analysis is not performed. Blood samples are obtained from operating employees each month and from other employees on a quarterly basis. The results of blood lead monitoring are reported to employees and the employees have access to all of their blood lead analysis results. The employee is informed that his result is acceptable (less than 70 µg Pb/100g whole blood), marginal (71-90 µg Pb/100g whole blood) or unacceptable (90+ µg Pb/100g whole blood). The employee is also informed whether the result shows a strong increase, increase, no change, decrease or strong decrease in blood lead level since the last test. Exhibit A contains the blood lead monitoring data for employees assigned to the SB furnace which were made available to this evaluation.

Workplace Air Monitoring

Reportedly, many workplace lead-in-air measurements were made shortly after the SB furnace was made operational. Three to four months prior to this evaluation smelter personnel made their most recent breathing zone and work area measurements. The results of these measurements were not requested for inclusion in this evaluation.

Noise Level Measurements

A sound level survey was made of the operations associated with the SB furnace. The results of this survey are shown in Table 24. As can be seen from data, no serious noise sources were discovered.

CONTROL CRITIQUE

The engineering and work practice controls of employee exposure at this smelter are exemplary. The effectiveness of this system of controls is evidenced by the control of employee exposures to lead in all work activities associated with the SB furnace to approximately 100 $\mu g/m^3$ or less.

In general, the local exhaust ventilation systems provided for the SB furnace are well designed and maintained. They provide good enclosure of emission sources, vigorous hood face and duct transport velocities, access openings and mobility to allow efficient performance of routine work. The employees were observed to effectively utilize local exhaust ventilation controls to minimize their exposure to emissions from the process. The isolation of charge materials handling, charge preparation and furnace charging from other SB furnace work areas provides obvious benefit in confining

TABLE 24. RESULTS OF NOISE MEASUREMENTS MADE IN ASSOCIATION WITH SB FURNACE OPERATIONS

Location no.	Description of measurement location and/or operation	Noise type[1] S/I	Exposure[2] C/I	Sound level[3] dBA	Sound level[3] dBC
1*	2 meters from burner end of afterburner	S	I	78-80	88-90
2*	2.5 meters from side of afterburner	S	I	81-83	91-94
3*	Slag tapping location, afterburner side of furnace, metal tapping end of furnace	S	I	81-82	87-88
4*	Near finished metal ladles	S	I	75	84-85
5*	Slag tapping location, control room side of furnace	S	I	74-75	84-86
6*	1 meter from afterburner end of furnace	S	I	77-78	89-90
7*	Process control room	S	I	55-57	69-71
8	Charging level, right side of charging hood	S	I	79-81	84-87
10	Charging level, near combustion air fan for afterburner	S	I	92-94	94-96
11	Inside cab of charge preparation front-end loader	S	C	80-88	88-98

*Refer to Figure 1 for location of sound level measurement

[1]Noise type: S = steady, I = Impulse or impact

[2]Exposure: C = continuous, I = intermittent

[3]Sound level: Measured in decibles on the A and C weighting networks of a type S2A sound level meter

contamination generated by these operations to the Charge Storage and Preparation Building. The low lead-in-air concentrations found in this building must be at least in part attributable to the handling of agglomerated flue dust rather than bulk quantities of untreated flue dust.

Yard sprinling and washdown procedures appear to minimize entrainment of dust into the air, tracking of muddy materials into other work areas, and splashing of mud on employee clothing and plant equipment.

Washdown procedures employed in the SB furnace operating area did maintain floors in dust free and clean conditions. Washdown operations were timed so that slag was tapped into ladles and then floors were washed. By the time slag was to be tapped again the floor covered by metal plates at the slag tapping station was essentially dry. According to operating personnel, the presence of wetted floors near molten metal and slag handling has not resulted in increased hazard when molten metal or slag spills have occurred.

A few situations were discovered which could be improved. They are:

- The SB furnace process control room was found to be contaminated with lead (38 to 54 $\mu g/m^3$). Since employees are permitted to smoke and consume beverages in this area, it is recommended that improved ventilation and housekeeping be provided to reduce lead contamination. It is unknown to what extent the contamination of this control room together with smoking and beverage consumption and other hygiene practices contribute to employee lead absorption as evidenced by reported blood lead levels.

  Ventilation of the control room could be engineered to bring in outside air through filters and maintain the control at a slight positive pressure with regard to the SB furnace operating floor. In any future installations of this type, consideration should be given to enlarging the control room and arranging control panels so that the base of the SB furnace could be viewed through windows in the control room wall. This would reduce traffic in and out of the control room when simple observations or hand signals to employees are required.

- The insertion of metal handles into molten finished metal at the finished metal ladle cooling station currently creates some uncontrolled exposure to the employee performing this operation. Exposure occurs when the employee must lean over the ladle to insert the handles and hold them until frozen in place. Possibly a set of tongs or other such tool could be used to reach over the ladle and insert the handles preventing the employee from being directly exposed.

- Limitations of the study did not permit careful evaluation of the effectiveness of the air filtration system provided for the cab of one front-end loader. If this filtration system is indeed

effective, its installation on all similar yard equipment used at this smelter should be considered.

- The local exhaust hoods provided for the slag ladles at the agglomeration furnaces could be made more effective by reducing the gap between the ladle and hood and also reducing the velocity of cross drafts caused by wind. It is suggested that a concrete pad or other substantial stand be provided to elevate ladles closer to the hoods. The bottom of the hood could be fitted with hanging chains to help break up cross draft air movement.

SECTION 6

OTHER PROCESSES AND CONTROLS

In addition to the SB furnace and associated equipment, a variety of other smelting processes are operated at the Paul Bergsøe and Sons A/S Glostrup, Denmark facilities. Two of these processes: (1) rotary furnace smelting, and (2) pot induction furnace smelting were evaluated during this study. Each of these processes received relatively less attention than the SB furnace. The primary aim of the evaluations of these processes was to describe control equipment which may be readily adaptable to similar processes in the United States.

ROTARY FURNACE SMELTING

Description of Equipment and Controls

Rotary furnace smelting operations are conducted in separate facilities. Figure 23 shows a large building which is divided into two major sections. One part of the building is devoted to furnace operations while the other part contains charge storage and preparation functions.

Receipt of Raw Materials--

A variety of raw materials (slags, drosses, etc.) are received for smelting in the rotary furnaces. These materials are unloaded from trucks and stored in the segregated bins in the Charge Storage and Preparation Building shown in Figures 4 and 23. The yard unloading area is sprinkled and washed down in similar fashion to that described for the SB furnace facilities. Materials are handled by a variety of front-end loaders.

Charge Storage and Preparation--

The Charge Storage and Preparation Building associated with the rotary furnaces (refer to Figure 23) is a concrete structure provided with a large roll-up, materials delivery door, twelve bins for segregating raw materials, and another roll-up door which communicates with the rotary furnace operating area. This building is equipped with an automatic sprinkling system which periodically wets floors and dampens piles of raw materials. Several bins containing bagged, relatively non-toxic materials are not sprinkled. No mechanical ventilation is provided for this building.

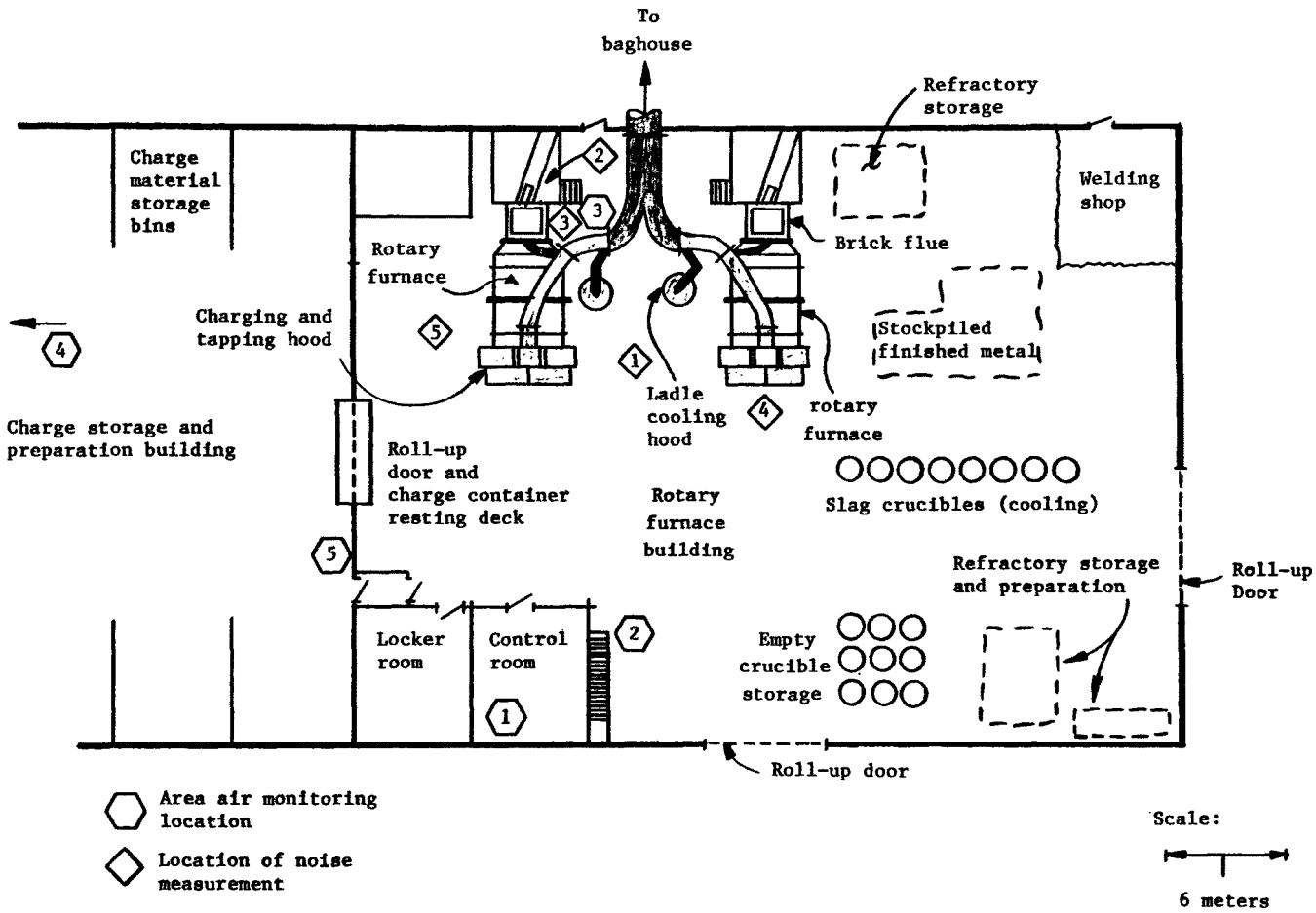

Figure 23. Rotary furnace smelting and charge storage preparation building.

02-4461-01

Rotary Furnace Charging Equipment--

Charge materials for the rotary furnace are placed in specially designed charge containers which rest on a low platform behind the roll-up door between the furnace operating and charge preparation section of the building. Figure 23 shows the location of this charge container resting platform. Figure 24 shows a close up of the charge resting platform and a detail of an individual charge container.

Each rotary furnace is equipped with a round charging door in the center of the front end of the furnace (refer to Figure 25). The lift truck picks up the charge container from one end, inserts it into the furnace, and then rotates the container to dump the charge material. Rotation is accomplished through use of a rotating lift head on the lift truck.

After dumping, each container is rotated back to its upright orientation, removed from the furnace and replaced on the charge container resting deck. When all containers have been emptied into the furnace the roll-up door at the resting deck is closed.

An exhaust hood is provided at the front of the furnace to capture emissions from the furnace during charging. A sketch of this hood is shown in Figure 25. Exhaust draft to this hood is controlled by a damper located directly behind the hood.

Rotary Furnace Operating Controls--

The two rotary furnaces studied are tangentially fired from the rear. Hot combustion gases enter the furnace body, circulate to the front of the furnace and then are exhausted through the brick flue (Refer to Figure 23 and 25). The furnaces are of steel shell construction with refractory lining. They rotate 360° and the rotation can be reversed.

Figure 25 shows the exhaust ventilation controls for the rotary furnaces. Hot flue gases are exhausted through the brick flue. The gap between the furnace body and the brick flue is enclosed and exhaust ventilated. An arched hood is provided over the charging/tapping end of the furnace. Exhaust draft to this hood is controlled by an electrically operated damper. The damper is opened during charging and tapping. The two furnaces are operated on staggered 10 hour cycles which allows the exhaust draft to be directed from one furnace to the other during alternating charging and tapping operations. The retractable portions of the arched hood open to allow an overhead crane to pickup filled ladles and replace empty ladles.

Each furnace is provided with a ladle cooling hood. After tapping ladles filled with finished metal are set beside the furnace at a location where a ladle can be swung over them to capture emissions during cooling. (Refer to Figures 23 and 25.

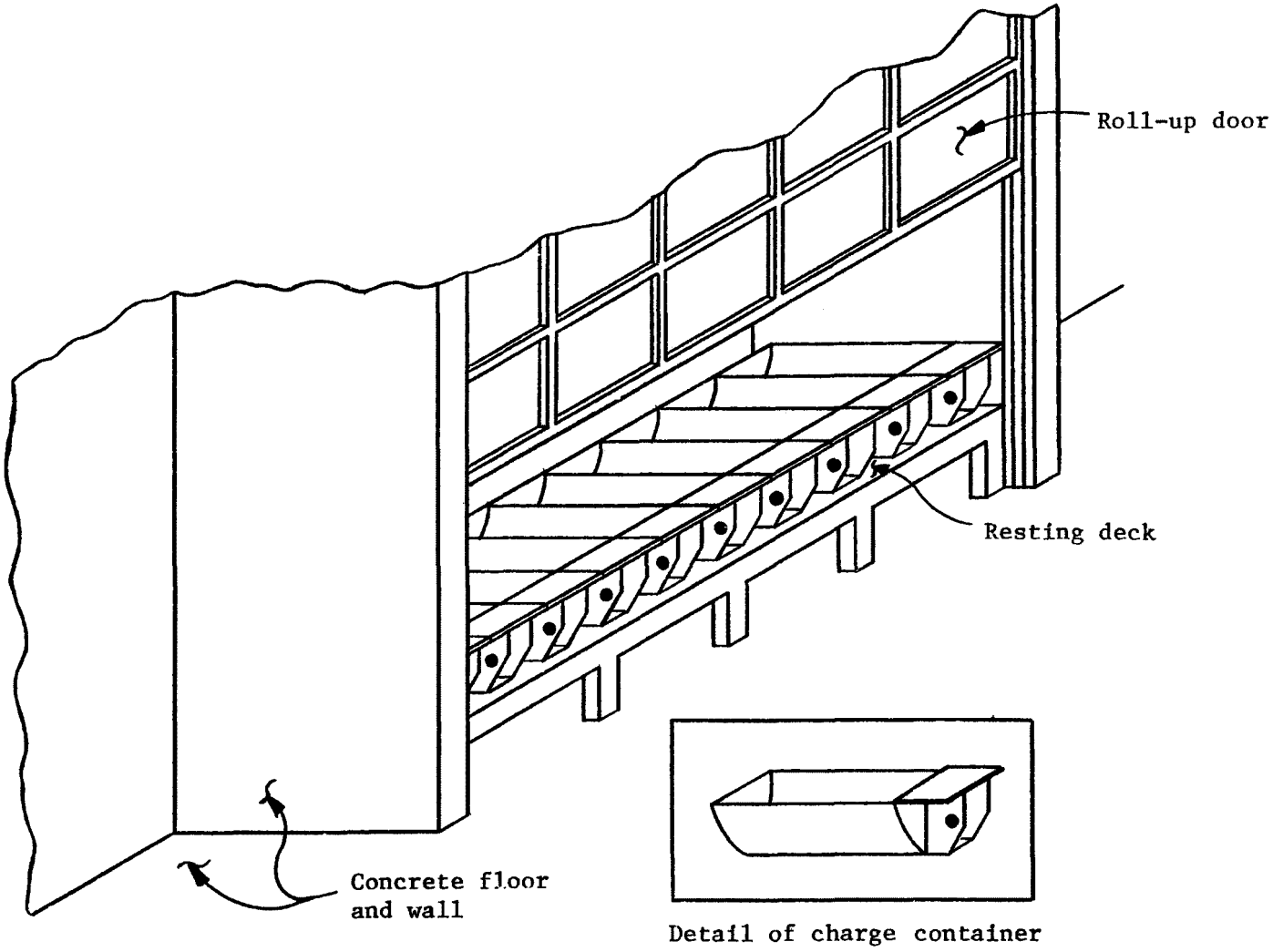

02-4462-01

Figure 24. Close-up of charge container resting deck, roll-up door, and detail of charge container.

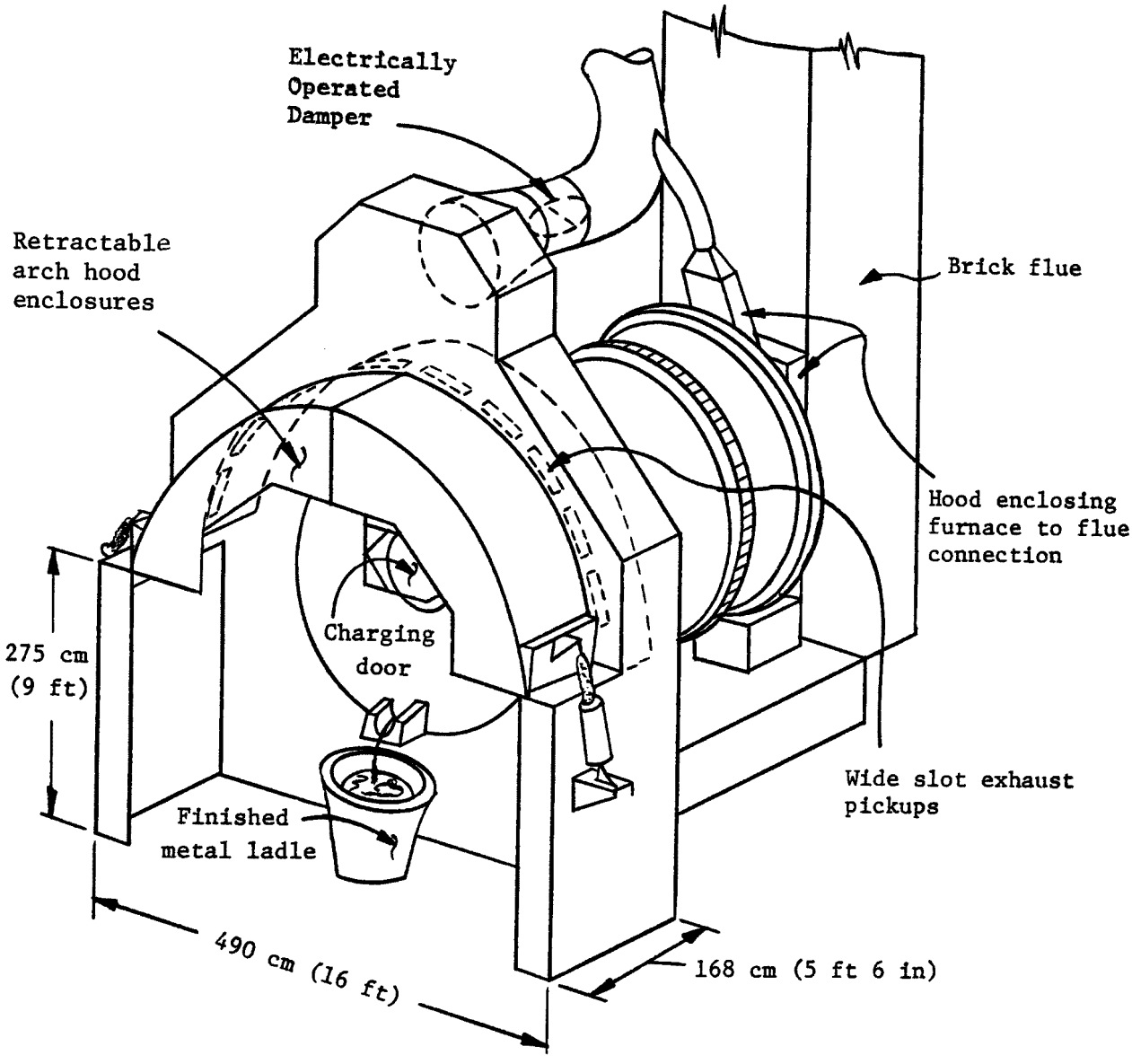

02-4463-01

Figure 25. Rotary furnace charging and tapping controls.

No mechanical dilution or makeup air ventilation is supplied to the rotary furnace operating area. Natural ventilation is facilitated by openings in the roof and along each of the side walls of the building. Air also enters through the large roll-up doors which are frequently open.

Air drawn into the rotary furnace local exhaust ventilation hoods and into the hot gas flue is combined and passed through a baghouse before being release to the ambient environment. Flue dust is collected in fabric cubical containers and recycled to the rotary furnaces. At the time this evaluation was performed, flue dust from the rotary furnaces was not being agglomerated.

The floors of the rotary furnace operating area are routinely flushed with water. The water drains into central sumps which are periodically cleaned to remove sludge or mud.

Employees do not routinely wear respirators while working in the rotary furnace operating area. Respirators are worn in the rotary furnace Charge Storage and Preparation Building, when handling flue dust and when working with storage piles in the yard area surrounding the rotary furnace building.

A process control room is provided in the rotary furnace operating area. This room contains process control panels and is also used as a rest area where employees are permitted to smoke and consume beverages.

Description of Emission Sources and Potential Exposures

Materials Handling Emissions--

In this portion of the smelter there are several situations where employees can be exposed to contaminants emitted by materials handling. The following paragraphs describe these situations, the employee interaction with the emission source and the control of the source.

Raw Materials Handling--Off loading and handling of raw materials can involve generation of airborne contamination. In this portion of the smelter flue dust is handled in unagglomerated form which creates significant exposure. A number of yard or general labor personnel handle materials at this smelter. The smelting site is crowded with many piles of stored material lining traffic-ways. As necessary employees bring material into the rotary furnace Charge Storage and Preparation Building. These employees frequently wear respiratory protection especially when handling dusty materials. Generation of dust in this building is suppressed by the sprinkling and washdown controls described earlier.

Since the rotary furnaces are operated on a batch rather than continuous production schedule, charge preparation and handling is not a full time activity. Filling of charge containers can be accomplished in several minutes using a front-end loader. During this operation, employees are instructed to wear respirators. Aside from delivery of charge materials and

charge container filling no other activities are conducted in this portion of the building. Therefore, total employee exposure time in this area is only a few hours each day.

Slag Handling--When slag is tapped into ladles from the rotary furnaces, the ladles remain briefly under the arched exhaust hoods. They are then moved by lift truck to the indoor slag cooling area shown in Figure 23. Any fume or smoke emitted from these slag ladles escapes into the work environment. No local exhaust ventilation is provided for the cooling slag ladles. Employees do not wear respirators during slag handling. After the slag has solidifed, portions of it may be removed from the ladles at the cooling area or the ladles may be taken outside and dumped. A large front-end loader is used to handle dumped slag. Wetted floors and yard surfaces are the only controls which assist in suppressing potential particulate emissions from solidified slag handling.

Finished Metal Handling--When finished metal ladles are filled from the rotary furnaces they are moved from under the arched hood to cooling stations between the furnaces. Local exhaust hoods are then swung over the ladles to capture emissions during cooling. Emissions from the ladles during transfer to the cooling station are uncontrolled. Employees do not wear respirators when handling finished metal ladles.

Flue Dust Handling--Exposure to flue dusts collected from rotary furnace operations occurs during baghouse maintenance, flue dust container (fabric cubical) replacement and handling, and during charge prepartion. Aside from wetted and washed down working surfaces, respirators are the primary means to control employee exposure to flue dust.

Residues from Drains and Sumps--The paved yard surfaces and floors inside operating and materials handling areas are sloped to drains and sumps. These water collection points are routinely cleaned to remove deposits of mud. Given the wetted nature of the material, dust generation is not an immediate hazard. Splashes of particulate laden water, if allowed to dry on work clothing, tools or work surfaces, could become a source of airborne contamination.

Residues from Furnaces, Flues and Ductwork--During furnace shutdown the rotary furnace and flue refractory is inspected, repaired and/or replaced. These operations create opportunities for employee exposure. Employees do wear respirators during maintenance operations.

Charging Emissions--

Rotary furnace charging is performed by one furnaceman operating a lift truck. Rotation of the furnace is stopped, the draft to the arched exhaust hood is activated, the front access charging door of the furnace is opened, the roll-up door at the charge container resting deck is raised, and charge containers are emptied one by one into the furnace.

Emissions from the charging operation emanate from the furnace charging door and rise into the arched hood. If the charge container is not completely righted before being withdrawn from the furnace, buoyant fumes and smoke can be trapped under the inverted container and released when the container is righted. If the container is righted outside the influence of the arched hood, these emissions escape into the workplace.

Only the furnaceman who operates the lift truck is directly involved with furnace charging. He is not directly exposed to charging contamination which emanates from the charging door. He can be exposed to fugitive emissions which escape the arched hoods or which are entrained by the charge containers as they are withdrawn from the furnace. Charging requires less than 30 minutes to complete and may involve 10 to 15 tons of material. The furnaceman performing this operation does not wear a respirator.

Slag and Metal Tapping--

When the furnace is ready to tap, its rotation is stopped, the draft to the arched hood is activated and a rolling work platform is positioned under the arched hood. The furnace rotation is stopped at a point where one of the three tap holes is positioned above the fill level in the furnace but within easy reach of a furnaceman when standing on the rolling work platform. A sledge hammer is used to loosen a metal rod with a flat head which is lodged in the center of the taphole refractory plug. This rod is removed when loosened. The furnaceman who performs the tapping operation then wears a faceshield while using a pneumatic hammer and bit to clean out the refractory material from the taphole. This tapping operation takes several minutes during which time the furnaceman is close to the end of the furnace where he is exposed to radiant heat, noise from the pneumatic hammer, and potentially to emissions from the tap hole refractory and furnace interior which escape from the taphole. A respirator is not worn during this operation.

Once the taphole has been opened the rolling work platform is moved away and a slag ladle is positioned under the arched hood using a lift truck. From a position outside and adjacent to the process control room, a furnace man operates the controls which govern furnace rotation. A second furnaceman stands a few meters from the slag ladle to observe the filling of the ladle. The furnace is rotated and slag is poured. When the ladle is nearly full the furnace is rotated to stop the flow of slag. A lift truck removes the filled slag ladle from under the arched hood and deposits it at the slag ladle cooling area shown in Figure 23. An empty slag ladle is then moved into position.

Emissions from the tap hole rise into the arched hood. Emissions from cooling slag ladles escape into the work environment. Employees do not wear respirators during this operation.

Finished metal is tapped after slag. The same taphole is used for both metal and slag tapping. An overhead crane is utilized to move finished metal ladles. The overhead crane is operated by a pendant control. The movable sections of the arched hood are retracted to allow the cables from the overhead crane to pass and close positioning of the ladle. When a ladle is filled

it is manually skimmed using a long handled hoe like instrument. The crane is then used to move the filled ladle to its cooling station where a local exhaust ventilation hood is provided.

Emissions during metal pouring rise into the arched hood. Emissions from the ladle during its transfer to the cooling station escape into the workplace. Employees do not wear respiratory protection when pouring and handling finished molten metal.

Once the finished metal has frozen in the ladle, the crane is used to remove the metal ingot and transfer it to the stockpile area shown in Figure 23.

The furnace taphole is closed using refractory mud/clay and the central metal rod.

Engineering Control Evaluation

The engineering controls of employee exposure to lead and antimony associated with rotary furnace operation were evaluated using three sources of information. They are:

- Engineering measurements and design considerations
- Observations
- Air sampling information

These information sources will be discussed where applicable in conjunction with the control evaluated.

Charge Materials Receiving, Storage and Preparation--
Engineering Measurements--The engineering controls of interest are: 1) the use of sprinklers to suppress dust levels in yard areas and inside the Charge Storage and Preparation Building, and 2) the separation of these activities from rotary furnace operations. These controls were evaluated through observation and air sampling.

Observations--The floors of the Charge Storage and Preparation Building were observed to remain wet. Storage piles in bins were moistened. Movement of the front-end loaders within this building does not create visible generation of airborne dust. The roll-up doors to the Charge Storage and Preparation Building were opened and closed as necessary to allow flow of materials.

Air Sampling--To obtain some limited information concerning the effectiveness of charge materials storage and handling controls, air samples were collected at two inside locations near the roll-up doors to the Charge Storage and Preparation Building. The results of this air sampling are shown in Table 25. Lead-in-air concentrations of 120 and 220 $\mu g/m^3$, and antimony-in-air concentration of less than 17 $\mu g/m^3$ and 15 $\mu g/m^3$ were measured. These values are not high considering the fact that flue dust is handled in this area.

TABLE 25. LEAD AND ANTIMONY-IN-AIR CONCENTRATIONS ASSOCIATED WITH ROTARY FURNACE OPERATIONS*

Job/location**	Sampling interval	Lead-in-air conc. $\mu g/m^3$	Antimony-in-air conc. $\mu g/m^3$
Breathing Zone - Samples			
Furnaceman (HL)	6:06a - 11:11a	290	<24
Furnaceman (HL)	11:11a- 1:45p	180	<47
Furnaceman (EJ)	6:04a - 11:15a	180	<16
Furnaceman (EJ)	11:15a- 1:45p	180	<47
Furnaceman (SJ)	6:04a - 11:10a	170	33
Furnaceman (SJ)	11:10a- 1:45p	130	<36
Yardman (NN)	6:06a - 1:48p	200	<14
Area Samples - Rotary Furnace Operating Area			
Rotary Furnace Control Room(1)	6:07a - 2:05p	42	16
Outside Control Near Center of Furnace Area(2)	6:10a - 11:12a	86	<23
	11:12a- 1:56p	59	<46
Between Rotary Furnace, Near Firing End of Left Furnace(3)	6:02a - 11:14a	97	17
	11:14a- 1:56p	32	42
Area Samples - Charge Storage and Preparation Building			
Charge Preparation Building Near Door to Yard(4)	6:20a - 2:00p	120	17
Charge Preparation Building Near Door to Furnace Area(5)	6:16a - 2:00p	220	15

* Samples were collected on cellulose acetate membrane filters with 0.8μ pore size and analyzed atomic absorption spectrophotometry (P & CAM 173)

** Refer to Figure 23 for location of area sampling stations.

Rotary Furnace Exhaust Ventilation Controls--

Engineering Measurement--The exhaust ventilation system is schematically depicted in Figure 26. Evaluation of this system involved measurement of air flows at several strategic points in the system. As with all ventilation systems of this general type, it was not feasible to make measurements at every point of interest in the system. Physical access was the primary restraint in this regard.

Figure 26 shows the points at which ventilation measurements were made. Where appropriate, hood entry coefficients were estimated and are presented in Table 26. Performance data concerning the arched hood and ladle cooling hood are presented in succeeding sections.

Observations--The rotary furnace exhaust ventilation system was found to be in good repair. No serious dents or malformations in ductwork were found. The system is constructed of heavy gauge steel.

During the day this system was evaluated, problems were encountered with the baghouse bag cleaning mechanism. A portion of the baghouse jammed in the cleaning cycle mode which resulted in significantly reduced draft to the furnaces while repairs were made. Emissions were observed to escape from the arched hoods during this period. These emissions visibly contaminated the rotary furnace operating area for over an hour.

The day prior to process evaluation, the electric damper behind the arched hood on one of the rotary furnaces broken down and required repair. During the repair period significant quantities of air contamination escaped into the workplace. Also during this workday a major spill of finished metal occurred when the receiving ladle was accidentally overfilled. The metal spilled out onto a wetted floor which caused generation of copious quantities of steam but no serious splashes or projection of hot metal occurred.

Handling of flue dust in fabric cubical containers appeared to involve significant exposure to flue dust. Connection of the collecting containers to the hoppers of the baghouse was not dust tight.

Air Sampling--The rotary furnace exhaust ventilation system works as a unit to control airborne contamination within the rotary furnace operating area. This system is supplemented by floor wetting and washdown and other work practices. Furnacemen spend varying amounts of time near specific emission sources in routine performance of their duties. For these reasons, the results of air sampling performed during this evaluation (breathing zone and work area) are more indicative of total system performance and work practices than performance of individual hoods, etc.

On the day evaluated the furnaces were charged with materials containing primarily lead and antimony. Air samples collected in employee breathing zones and at specific locations in the workplace were analyzed for lead and antimony. Table 25 presents the results of air sampling.

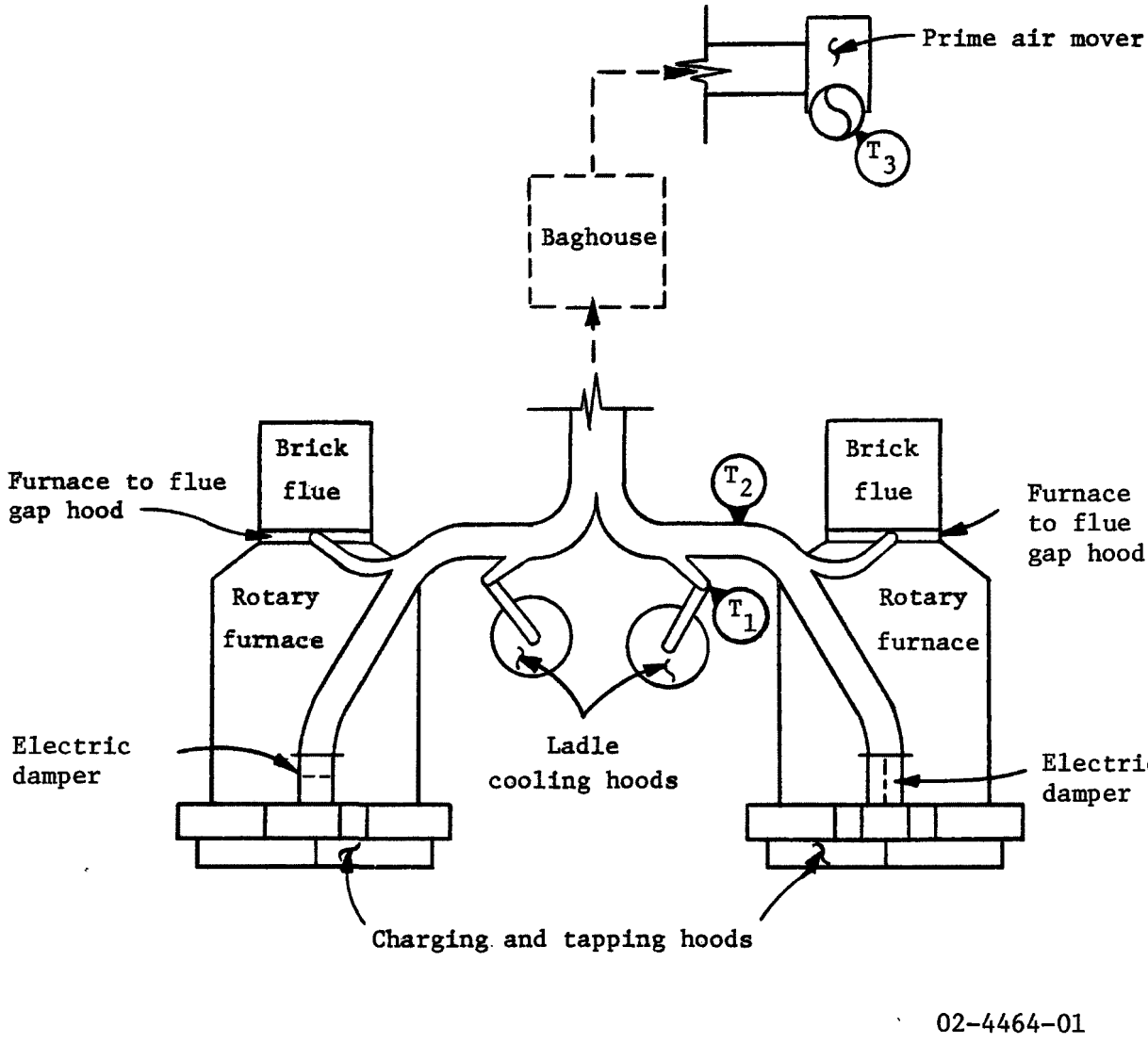

Figure 26. Overview of rotary furnace ventilation controls and key to ventilation system test points.

TABLE 26. RESULTS OF TESTS IN ROTARY FURNACE VENTILATION SYSTEM*

	Hood entry coefficient Ce**
T_1	0.58
T_2	
T_3	

*Air flow measurements were made using a pitot tube and inclined manometer; in-duct velocities, flow rates, temperature, and pressure data were considered proprietary and are not reported.

**$Ce = \sqrt{\frac{VP}{SP_h}}$, where SP_h = hood static pressure

Two air samples were gathered from each employee's breathing zone and at each location in the rotary furnace operating area. The baghouse malfunction occurred during the 6:00 a.m. to 11:00 a.m. work period. Measured air contamination was generally more significant during this period.

As can be seen from the data, employee exposures to lead-in-air were found to range from 130 to 290 $\mu g/m^3$ on the day evaluated. Only one quantifiable employee exposure to antimony was measured (33 $\mu g/m^3$). Other samples contained less than the detectable limit of antimony. Work area samples showed lead-in-air concentrations ranging from 32 to 97 $\mu g/m^3$. Measurable concentrations of antimony ranged from 16 to 42 $\mu g/m^3$. Relatively higher contaminant concentrations were found in employee breathing zones as compared to work area samples. This suggests that employees are exposed to contaminant sources during their work activities. Exposure involves contaminant concentrations which are higher than the background workroom contamination.

Rotary Furnace Charging and Tapping Hood--
Engineering Measurements--Figure 25 presents a sketch of the rotary furnace charging and tapping hood. The hood consists of a stationary section and two retractable arch sections which function in conjunction with crane operation. Air is exhausted from this hood through wide slots which are distributed over the front side of the arch in the stationary portion of the hood. These slots are approximately 10 cm (4 in.) in width. An Alnor® Velometer was utilized to measure air velocities at the lowest three slots on each side of the arch. Radiant heat and physical access prevented measurements at all slot openings. Slot velocities ranging from 3.3 to 7.6 m/s (650 to 1500 fpm) were measured with lowest velocities found at the bottom slots.

Physical access problems precluded measurement of air flow and static pressure in the ductwork directly behind the electrically operated damper. An air flow measurement was made at point T_2 shown in Figure 26. Air flow at this point is the sum of air entering the arched charging and tapping hood and air entering the hood enclosing the furnace to brick flue connection. It is estimated that approximately 6 m^3/s (13,000 cfm) enters through the arched charging and tapping hood.

Observations--A complete charging of each furnace was observed. Emissions which emanated from the charging door were observed to rise into the arched hood and enter the exhaust slots. A relatively small amount of contamination was observed to escape from the top front of the hood. Wisps of smoke and fume were also observed to escape from the small gap between the retractable and stationary sections of the arched hood. These emissions rose into the workplace and were diluted.

During insertion and extraction of charge containers through the furnace charging door, varying amounts of contamination were observed to escape from the arched hood. Most of the escaping contamination appeared to be entrained by the charge containers. This problem was most significant when charge containers were not completely righted before extraction from the furnace.

Several iterations of tapping both slag and metal were observed. Slag tapping requires several minutes to complete and was observed to involve between six and twelve slag ladles. Emissions from the tap hole and slag ladle were observed to rise into the arched hood and be collected. Only minor amounts of fume were observed to escape into the workplace during pouring of slag into ladles.

A crust was observed to form on the slag almost immediately. However, visible fume/smoke was observed to emanate from each slag ladle as it was moved by forklift to the cooling area. While cooling smaller and smaller amounts of emission were observed to escape from the ladles for several minutes.

During slag tapping, one furnaceman operates the furnace rotation controls, one moves slag ladles with a lift truck, and a third observes ladle filling and signals the man controlling furnace rotation. Aside from walking by cooling ladles of slag, these men were not observed to be directly exposed to emissions from slag tapping. While slag is poured from the furnace, these men observe from a distance of several meters.

Finished metal tapping produces seemingly larger quantities of fume. This fume emanates from the tap hole and ladle as it is filled. The arched hoods were observed to capture practically all of the metal tapping emissions when metal was poured at a less than maximum rate. When the furnace was rotated to produce very rapid pouring, a relatively small but seemingly important quantity of fume was observed to escape capture by the arched hood.

Some direct exposure of employees to fumes from molten metal was observed during the skimming of the metal and during its movement to the cooling station using the overhead crane. Both of these operations are conducted with employees working within three meters of the ladle. This proximity provides the opportunity for exposure to fumes which are being entrained by room air currents. Another similar exposure was observed when the crane hooks were removed at the ladle cooling spot and the exhaust hood was swung over the ladle.

When the retractable arches of the charging/tapping hood are raised, fumes emanating from the filled ladle of metal are not completely captured by the stationary portion of the hood. Fume emission at this time is not vigorous, but escaping fumes, etc. do contribute to background contamination.

Rotary Furnace Ladle Cooling Hood--
Engineering Measurements--Figure 27 presents a sketch of one finished metal ladle cooling hood used in the rotary furnace operating area. Hood dimensional and performance data are contained in Figure 27 and Table 26. As can be seen from the figure, this is a slotted hood which spreads the capture zone around the perimeter of the ladle.

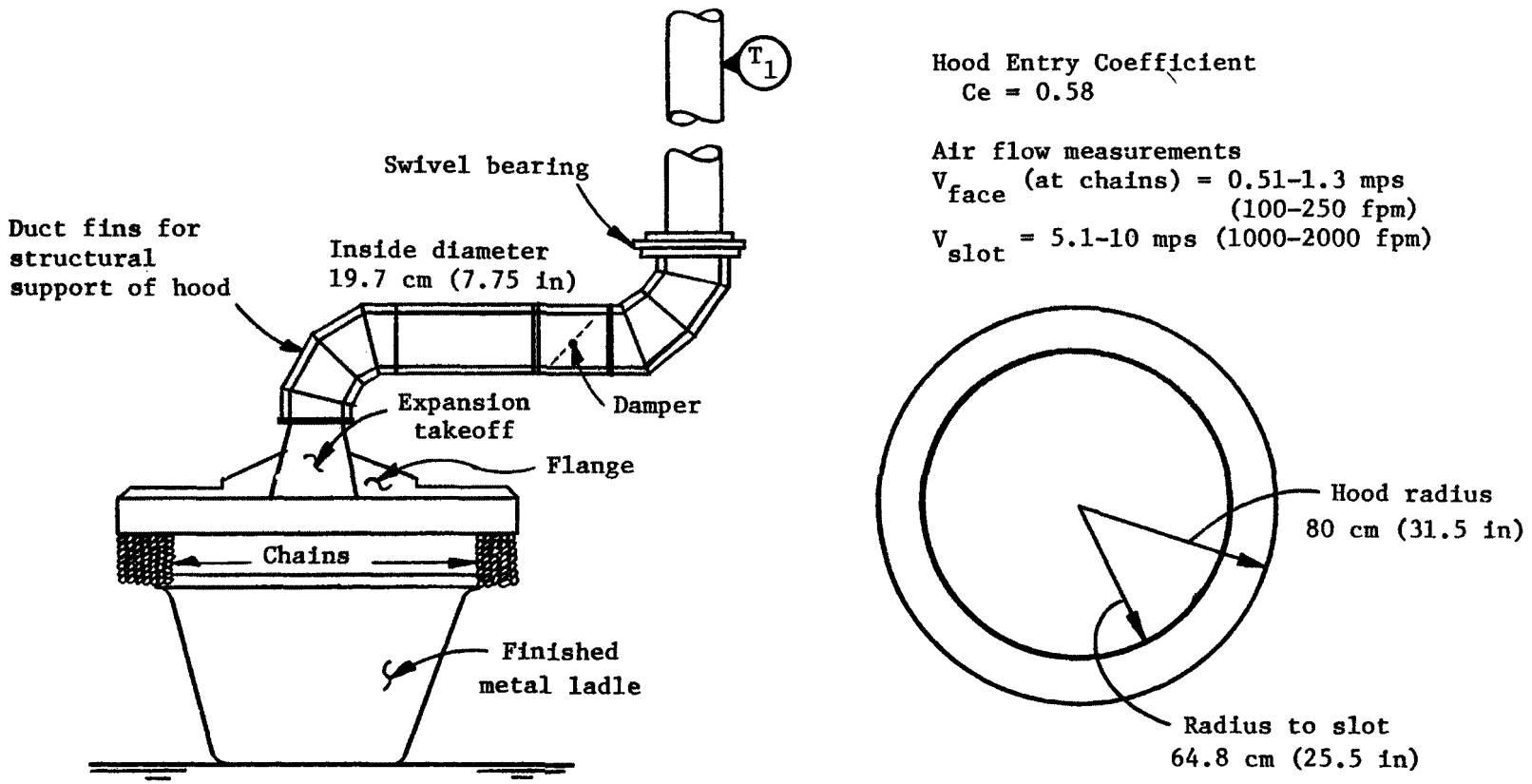

Side elevation of finished metal ladle cooling hood

Detail of slot design inside hood

02-4465-01

Figure 27. Finished metal ladle cooling hood.

Observations--Once the hood was positioned over a ladle of cooling metal, no emissions were observed to escape capture by the hood. Smoke generated by ventilation smoke tubes at the perimeter of the hood was observed to flow into the hood through the hanging chains.

Hood Enclosing the Furnace to Flue Connection--

No quantitative evaluation of this hood could be made. It does enclose the gap between the furnace and flue as shown in Figures 25 and 26, and no emissions were observed to escape this hood.

Other Industrial Hygiene Considerations

Personal Protective Equipment--

Similar protective clothing and equipment policies as described for SB furnace operations are followed in the rotary furnace work area.

Employee Hygiene--

See discussion associated with SB furnace operations.

Biologic Monitoring--

No results of blood lead monitoring were obtained for employees working in the rotary furnace department. Refer to the discussion associated with the SB furnace for a description of biologic monitoring policies.

Noise Level Measurements--

A sound level survey was made of the operations associated with the rotary furnaces. The results of this survey are shown in Table 27. As can be seen from the data, no serious noise sources were discovered.

Control Critique

The engineering controls provided for rotary furnace operations are well designed and maintained. When functioning properly and used appropriately by employees, these controls capture the vast majority of emissions which are produced during charging, furnace operations, tapping and finished metal cooling.

Several opportunities remain for improvement of fugitive emission control. These opportunities have been eluded to in the past and primarily involve work practices and operational changes. Emissions from cooling slag ladles could be reduced by placing covers over the ladles or relocating the cooling area out-of-doors. Emissions from metal tapping could be reduced by pouring the metal more slowly from the furnace into the ladle. Additional emission control could be accomplished by allowing the finished metal ladles to remain under the arched hoods for a longer period before moving to the final cooling station.

Housekeeping in the rotary furnace work area was good. Frequent wash-down of floors appeared to significantly reduce potential entrainment of settled particulate into workplace air.

TABLE 27. RESULTS OF NOISE MEASUREMENTS MADE IN ASSOCIATION WITH ROTARY FURNACE OPERATIONS

Location no.*	Description of measurement location and/or operation	Noise type[1] S/I	Exposure[2] C/I	Sound level[3] dba	dbc
1	Between rotary furnaces	S	I	77	84-86
2	Burner end of rotary furnace	S	I	82	89
3	Near rotary furnace combustion air fan	S	I	85-86	92-93
4	Pouring end of rotary furnace	S	I	77-78	83-84
5	Beside rotary furnace next to Charge Storage and Preparation Building	S	I	81	86

*Refer to Figure 23 for location of sound level measurement.

[1]Noise type: S = Steady, I = Impulse or Impact.

[2]Exposure: C = Continuous, I = Intermittent.

[3]Sound level: Measured in decibles on the A and C weighting networks of a Type 52A sound level meter.

Employees should be instructed to wear respirators during and following periods of process upset, failure of ventilation controls or during spills, etc.

POT INDUCTION FURNACE

A variety of small furnaces are used to produce relatively minor quantities of specialty alloys at this smelter. The ventilation controls associated with one, small, tilting electric induction furnace proved to be interesting and are discussed here.

Description of Equipment and Controls

The furnace studied is used to produce specialty copper based alloys. An overview of this furnace and its associated exhaust ventilation hood are shown in Figure 28.

This furnace is located in a building with several other furnaces engaged in production of various alloys. The furnace is of tilting type which facilitates pouring of its molten contents into a transfer ladle.

The furnace is provided with a slotted hood suspended over the furnace; this hood can be moved so that emissions from the furnace in its level and tilted position can be controlled.

Description of Emission Sources and Potential Exposures

Fumes and smoke emanate from the top of the induction furnace during furnace charging, meltdown and pouring. Due to its small size the furnace is manually charged. Containers of scrap (mostly plant scrap) are dumped into the furnace. In some instances a scoop shovel is used to handle fine materials. Ingots of known composition may also be added to bring the melt to proper specification.

During charging the furnaceman can effectively add materials to the furnace without being directly exposed to the plume of emissions emanating from the furnace. This can be accomplished by moving the hood to various positions over the furnace to allow the necessary access. Initial charging usually will require only several minutes to complete. As the material melts additional materials may be added at varying intervals.

While the furnace charge is melting, the furnaceman tends to other operations located in the same building. This employee returns to the furnace periodically to observe how the melt is proceding.

As the melt nears readiness for pouring, the furnace man skims the molten metal surface and moves the transfer ladle into position to receive the molten alloy. Again the overhead slot hood can be manuevered to prevent the employee from being directly exposed to the plume of fumes emanating from the furnace.

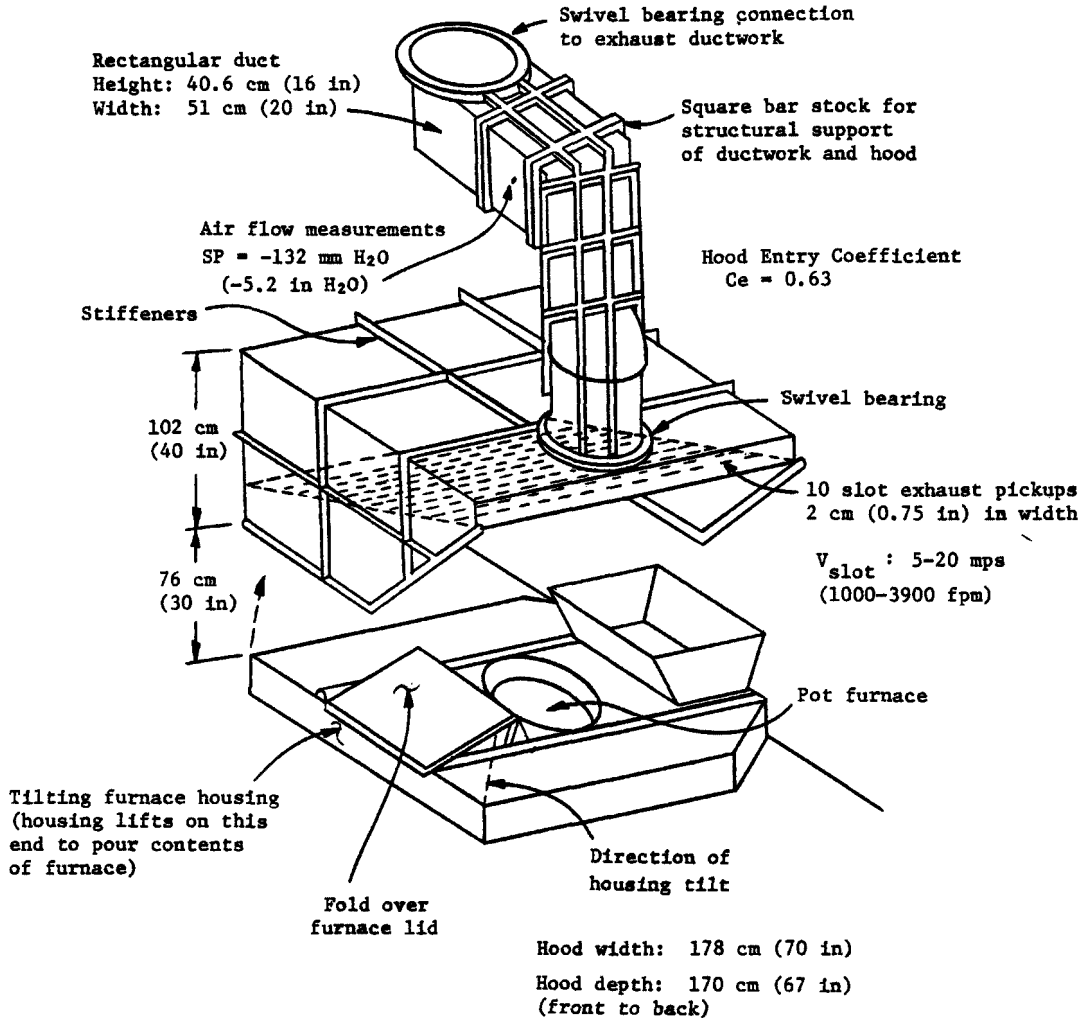

Figure 28. Pot induction furnace hood.

During pouring of the furnace, the furnace and its housing deck tilt as is indicated in Figure 28. The overhead exhaust hood is moved to allow this tilting but still remain in position to capture emissions. Once the molten metal is poured into the transfer ladle, the ladle is moved out from under the hood. No control is provided for emissions from the ladle until it reaches its pouring station. The employee who tends this furnace is exposed to fugitive emissions from this furnace operation and to fugitive contaminants from other equipment in the same general work area.

Engineering Control Evaluation

Engineering Measurements--

The pot induction furnace hood was evaluated by measuring slot velocity inside the hood and air flow in the duct leading away from the hood. Slot velocity measurements were made using an Alnor® Velometer. A pitot tube and manometer were used to make air flow measurements at the point indicated in Figure 28.

As indicated by the results of the measurements, a large volume of air is moved through this hood resulting in relatively high slot velocities.

Observations--

When positioned over the pot furnace, the hood appeared to very effectively capture all visible contamination.

During charging, skimming and pouring the furnaceman did not always take full advantage of the mobility of the hood to help preclude his contact with emissions. Better hood positioning could have been possible during the period observed.

Ventilation smoke tubes were used to observe air flow at all sides of the hood. Smoke was observed to be swiftly pulled into the hood.

Air Sampling--

Due to the presence of multiple emission sources in the same general work area, air samples were not gathered in the evaluation of this hood.

Control Critique

The hood appeared to function well when properly utilized by the furnaceman. Emissions from the transfer ladle as it is moved to casting lines could be lessened by placing a lid over the ladle. This would also help to reduce the possibility for splashes of molten metal to occur.

APPENDIX

BLOOD/LEAD DATA SUPPLIED BY BERGSØE MANAGEMENT

Paul Bergsøe & Søn A/S
Telephone: National (02) 96 12 85
International + 45 2 96 12 85
Telex 33254
Cables: Bergsøe Copenhagen

Postal Address
DK-2600 Glostrup, Denmark

6th October, 1978
NG/ajü
3-170/20

Radian Corporation
8500 Shoal Creek Blvd.
Austin, Texas 78756
U.S.A.

Att.: Mr. Richard Coleman

Dear Rick,

As agreed during your visit here last week, we shall provide statistical information about the blood-lead measurements on our personnel working in the SB furnace department.

Regular lead-in-blood measurements have only been made over the last two years, and they have not been consistent at all times. For this reason we prefer to give you only the most recent figures, i.e. the lead-in-blood result of the latest sample drawn from each of the 27 employees up to mid September 1978. They all date from the latest few months.

The SB furnace has been in operation for about 3 years, and most of the people have only worked in that department. Three men have been transferred from other departments less than a year ago, but no one later than January 1978.

Lead-in-blood figures for period up to week 78/37
(dated 17th September 1978)

µg/100 ml	No. of persons, and working history (Note 1)
≤ 30	4, worked less than 6 months (Note 2)
31-40	1, worked about 1 year
41-50	5, worked 1½ - 2 years
51-60	7, worked 2 - 8 years
61-70	8, worked 1½ - 4 years (Notes 3 and 4)
71-80	2, worked 2 and 8 years respectively
Total	**27 persons**

Radian Corporation
Richard Coleman

Note 1. All samples were analysed by a U.K. laboratory (NOSH). Recent intercalibrations with other laboratories strongly indicate that the results from NOSH are significantly higher than those of the official Danish Work Safety Laboratory (AMT). The statistical difference is no less than 29%, and if it were deducted it would bring the above figures below 60 µg.

Note 2. Tests taken upon employment.

Note 3. One man in this group worked 21 years in the plant.

Note 4. One of these tests was crosschecked with three other laboratories, all finding 10-15 µg less.

Yours sincerely,
PAUL BERGSØE & SØN A/S

Niels Gram

TECHNICAL REPORT DATA
(Please read Instructions on the reverse before completing)

1. REPORT NO. EPA-600/2-80-022	2.	3. RECIPIENT'S ACCESSION NO.
4. TITLE AND SUBTITLE Evaluation of Paul Bergsoe & Son Secondary Lead Smelter		5. REPORT DATE January 1980 issuing date 6. PERFORMING ORGANIZATION CODE
7. AUTHOR(S) Richard T. Coleman & Robert Vandervort		8. PERFORMING ORGANIZATION REPORT NO.
9. PERFORMING ORGANIZATION NAME AND ADDRESS Radian Corporation 8500 Shoal Creek Blvd. Austin, Texas 78766		10. PROGRAM ELEMENT NO. 1AB604 11. CONTRACT/GRANT NO. IAG# EPA-78-D-X0309 NIOSH Contract #210-77-0008
12. SPONSORING AGENCY NAME AND ADDRESS Industrial Environmental Research Laboratory Office of Research and Development U. S. Environmental Protection Agency Cincinnati, OH 45268		13. TYPE OF REPORT AND PERIOD COVERED Final; 10/78-10/79 14. SPONSORING AGENCY CODE EPA/600/12

15. SUPPLEMENTARY NOTES

16. ABSTRACT

This report presents the findings of an investigation performed to obtain data concerning fugitive and workroom emissions from secondary lead smelters. The results are being used within both NIOSH and EPA as part of a larger effort to define the potential workplace/environmental impact of emissions from this industry segment and the need for improved controls. The findings will also be useful to other agencies and the industry in dealing with control problems. Either the Metals and Inorganic Chemicals Branch of the USEPA or the Division of Physical Science and Engineering of NIOSH should be contacted for any additional information desired concerning this program.

17. KEY WORDS AND DOCUMENT ANALYSIS

a. DESCRIPTORS	b. IDENTIFIERS/OPEN ENDED TERMS	c. COSATI Field/Group
Secondary Lead Smelting Lead Fugitive Lead Emissions Occupational Exposure	Bergsoe Agglomeration Furnace Fugitive Lead Emission Controls	

18. DISTRIBUTION STATEMENT RELEASE TO PUBLIC	19. SECURITY CLASS *(This Report)* Unclassified	21. NO. OF PAGES 110
	20. SECURITY CLASS *(This page)* Unclassified	22. PRICE

EPA Form 2220-1 (9-73)

☆ U.S. GOVERNMENT PRINTING OFFICE: 1980-657-146/5597