EPA-600/4-77-008a
January 1977

Environmental Monitoring Series

STANDARDIZATION OF METHOD 11 AT A PETROLEUM REFINERY: Volume I

Environmental Monitoring and Support Laboratory
Office of Research and Development
U.S. Environmental Protection Agency
Research Triangle Park, North Carolina 27711

RESEARCH REPORTING SERIES

Research reports of the Office of Research and Development, U.S. Environmental Protection Agency, have been grouped into five series. These five broad categories were established to facilitate further development and application of environmental technology. Elimination of traditional grouping was consciously planned to foster technology transfer and a maximum interface in related fields. The five series are:

1. Environmental Health Effects Research
2. Environmental Protection Technology
3. Ecological Research
4. Environmental Monitoring
5. Socioeconomic Environmental Studies

This report has been assigned to the ENVIRONMENTAL MONITORING series. This series describes research conducted to develop new or improved methods and instrumentation for the identification and quantification of environmental pollutants at the lowest conceivably significant concentrations. It also includes studies to determine the ambient concentrations of pollutants in the environment and/or the variance of pollutants as a function of time or meteorological factors.

This document is available to the public through the National Technical Information Service, Springfield, Virginia 22161.

STANDARDIZATION OF METHOD 11
AT A PETROLEUM REFINERY

VOLUME I

by

George W. Scheil
Michael G. Sharp
Midwest Research Institute
Kansas City, Missouri 64110

EPA Contract No. 68-02-1098, Task 6

EPA Project Officer
M. Rodney Midgett
Quality Assurance Branch
Environmental Monitoring and Support Laboratory
Research Triangle Park
North Carolina 27711

Environmental Monitoring and Support Laboratory
Office of Research and Development
U.S. Environmental Protection Agency
Research Triangle Park
North Carolina 27711

DISCLAIMER

This report has been reviewed by the Environmental Monitoring and Support Laboratory, U.S. Environmental Protection Agency, and approved for publication. Approval does not signify that the contents necessarily reflect the views and policies of the U.S. Environmental Protection Agency, nor does mention of trade names or commercial products constitute endorsement of recommendation for use.

FOREWORD

Midwest Research Institute (MRI), under Task 6 of EPA Contract No. 68-02-1908, conducted in-house work toward the standardization of Method 11 (Federal Register, Vol. 39, March 8, 1974, pp. 9321-9323) as applied to the analysis of H_2S in petroleum refinery fuel gases.

The results of this in-house work are given in this report. Further work on the method was done under Task 8 of EPA Contract No. 6802-1908. This continuation of efforts was a collaborative test to evaluate the accuracy and precision of the modified Method 11. The results of the work done under Task 8 are given in Volumes II and III.

Approved for:

MIDWEST RESEARCH INSTITUTE

L. J. Shannon

Larry Shannon, Director
Environmental and Materials
Sciences Division

April 4, 1977

ABSTRACT

Method 11 (Federal Register, 39, pp. 9321-9323, March 8, 1974), "Determination of Hydrogen Sulfide Emissions from Stationary Sources," is subject to serious mercaptan interferences. Mercaptans are also efficiently collected by the alkaline cadmium impinger solution used and the resulting mercaptides react with the iodine titrant to give high results. Several alternate absorbing reagents were evaluated for minimum interferences. The pH of each of several cadmium and zinc salt solutions was adjusted to obtain a high collection efficiency for H_2S with minimum mercaptan collection. The most selective absorbing solution was 0.16 M cadmium sulfate at a pH of 3.0. The H_2S collection efficiency for three midget impingers containing this solution was 96%, and a mercaptan concentration equal to the H_2S present gave results about 5% high.

A ruggedness test was then used to evaluate the effect of 14 variables on the analysis. The results of the test indicated that the most important variables were cadmium concentration, pH, and the spacing between the impinger tip and the bottom of the impinger. The optimized procedure was then field tested at three refineries on a variety of process streams. No serious problems with the procedure were found. The laboratory and field tests were then used to write a final version of the procedure in preparation for a collaborative test of the method (the collaborative test is covered in Volume II of this report).

This report was submitted in fulfillment of Task 6 of Contract No. 68-02-1098 by Midwest Research Institute under the sponsorship of the U.S. Environmental Protection Agency. This report covers a period from August 1, 1974 to November 1, 1975, and work was completed as of December 31, 1976.

CONTENTS

Foreword iii
Abstract iv
Figures vi
Tables vii
Acknowledgment viii

1. Introduction 1
2. Laboratory Test Facility 3
3. Evaluation of Alternative Analysis Procedures 7
4. Tests for Ruggedness and Collection Efficiency 12
5. Field Testing 16

Appendices

A. Method 11 - Determination of Hydrogen Sulfide Emissions From Stationary Sources 21
B. Tentative Method for the Determination of Hydrogen Sulfide Emissions From Stationary Sources 31
C. Ruggedness Test Data 41
D. Tentative Method for the Determination of Hydrogen Sulfide Emissions From Stationary Sources 45
E. Tentative Method for the Determination of Hydrogen Sulfide Emissions From Stationary Sources 57

FIGURES

Number		Page
1	H_2S Sampling Manifold.	4
2	Schematic Drawing and Photographs of the Diffuser.	6
3	Sample Conditioning System for Field Tests	18
A-1	H_2S Sampling Train	26
B-1	H_2S Sampling Train	36
D-1	H_2S Sampling Train	51
E-1	H_2S Sampling Train	63

TABLES

Number		Page
1	Cadmium Acetate Absorbent Results.	9
2	Test Results of $CdSO_4$, Cd Formate, and Zn Acetate Absorbing Reagent Systems.	11
3	Procedure Variables and Results of Ruggedness Test	14
4	Measurement of Methyl and Ethyl Mercaptan Interferences. . . .	15
5	Field Test Results - West Texas Feedstock.	16
6	Field Test Results - Western Alberta Feedstock	19
7	Field Test Results - Middle East Sour Feedstock.	20
A-1	Field Data	27
B-1	Field Data	36
C-1	Test Design Matrix	43
C-2	Results of Ruggedness Test - Blanks and H_2S Measured	44

ACKNOWLEDGEMENTS

Task 6 was conducted under the technical management of Mr. Paul C. Constant, Jr., Head, Environmental Measurements Section of MRI's Environmental and Materials Sciences Division, who is the program manager. Dr. George Scheil was task leader. He was assisted by Messrs. John LaShelle, Bruce DaRos, Thomas Merrifield, and Michael Sharp of MRI. Dr. Joseph Knoll, Quality Assurance Branch, U.S. Environmental Protection Agency (EPA), conducted laboratory tests of the various methods in cooperation with MRI. The assistance of Mr. T. M. Nairn, Jr., of the Cosden Oil and Chemical Company and Mr. Darrell Bruckert of Union Oil Company during the refinery tests is gratefully acknowledged.

SECTION 1

INTRODUCTION

This report covers the tests and evaluations conducted by Midwest Research Institute (MRI) of proposed methods to replace the present Method 11 procedure (Federal Register, Vol. 39, March 8, 1974, pp. 9321-9323, (see Appendix A). The testing was done for the Environmental Protection Agency (EPA) under Contract No. 68-02-1098, "Standardization of Stationary Source Emission Measurement Methods." Volume I of this report covers Task 6 of the contract which includes the search for a method that is free of the mercaptan interference, method evaluation, and field testing of the final method. Task 8 was a collaborative test of the proposed new Method 11 and is covered in Volumes II and III.

Method 11 is intended for use in the analysis of refinery fuel gas streams for hydrogen sulfide (H_2S). Under the current standard (Federal Register, March 8, 1974) limits have been placed on sulfur dioxide (SO_2) emissions from refinery process heaters and boilers. SO_2 emissions are controlled indirectly by limiting the amount of H_2S in the fuel gas to 230 mg/dscm.

The March 8, 1974, Method 11 specifies alkaline cadmium sulfate as the absorbent for H_2S. An impinger filled with hydrogen peroxide is included to eliminate SO_2. However, in some refineries significant amounts of mercaptans are present in the fuel gases and the mercaptans are collected along with the H_2S. One mole of mercaptan is measured as 1/2 mole of H_2S in the iodometric titration of the H_2S collected.

Task 6 began in the fall of 1974 with an examination of the literature for possible alternate methods. A test facility was then constructed that allowed for the addition of known amounts of H_2S, SO_2, and methyl and ethyl mercaptans to a natural gas stream. Several absorbing reagents were then tested using cadmium or zinc solutions with sulfate, acetate, or formate anions. The general strategy was to control the solution pH and thereby obtain a high collection efficiency for H_2S without also collecting the mercaptans. The absorbent chosen for final use was 0.16 M cadmium sulfate adjusted to a pH of 3.0. This absorbing solution was then tested for collection efficiency and 14 procedure variables were evaluated in a ruggedness test. The optimized procedure was then used at three refineries that had a variety of fuel gas streams. A final procedure was then written that incorporated several changes that were determined from the results of the field tests.

The following sections of this report examine the fuel-gas test assembly used by MRI in its laboratory tests, the various analysis methods tested, the efficiency and ruggedness tests of the final method and the field testing of the proposed, new Method 11 at three refineries.

SECTION 2

LABORATORY TEST FACILITY

A stream of natural gas spiked with H_2S was used to simulate a refinery fuel-gas stream for MRI's laboratory investigations. A schematic of the system is shown in Figure 1. The H_2S concentration is determined by the ratio of the natural gas meter flow to the flow rate of the pure H_2S gas being added. Since the H_2S rotameter has a logarithmic taper, the accuracy, which is 5%, is constant over the entire flow range. Since the natural gas meter is calibrated to 1% accuracy, an H_2S concentration range of 40 to 5,000 mg/m^3 is available with an accuracy of 5%.

The manifold includes provisions for the addition of sulfur dioxide, methyl mercaptan and ethyl mercaptan singly or in combination to check interference effects. The SO_2 and CH_3SH are added to the test stream as the pure gases. The C_2H_5SH is added by bubbling nitrogen through the liquid mercaptan and controlling the rate of addition by controlling the flow rate and partial pressure of the C_2H_5SH in the mixture. All critical sections of the system are made from Teflon,[a] stainless steel, or glass. The system also includes a provision for addition of other gases if required. Excess gases are burnt outside the building to convert the sulfur compounds to SO_2.

To obtain thorough mixing of the H_2S and the other gases, the two spike gas streams enter the natural gas stream at the center of a 1-in. O.D., Teflon pipe. For greater stability, the H_2S stream is also mixed with a flow of 200 cc/min of dry nitrogen just before it enters the natural gas stream.

---

a/ Trade name.

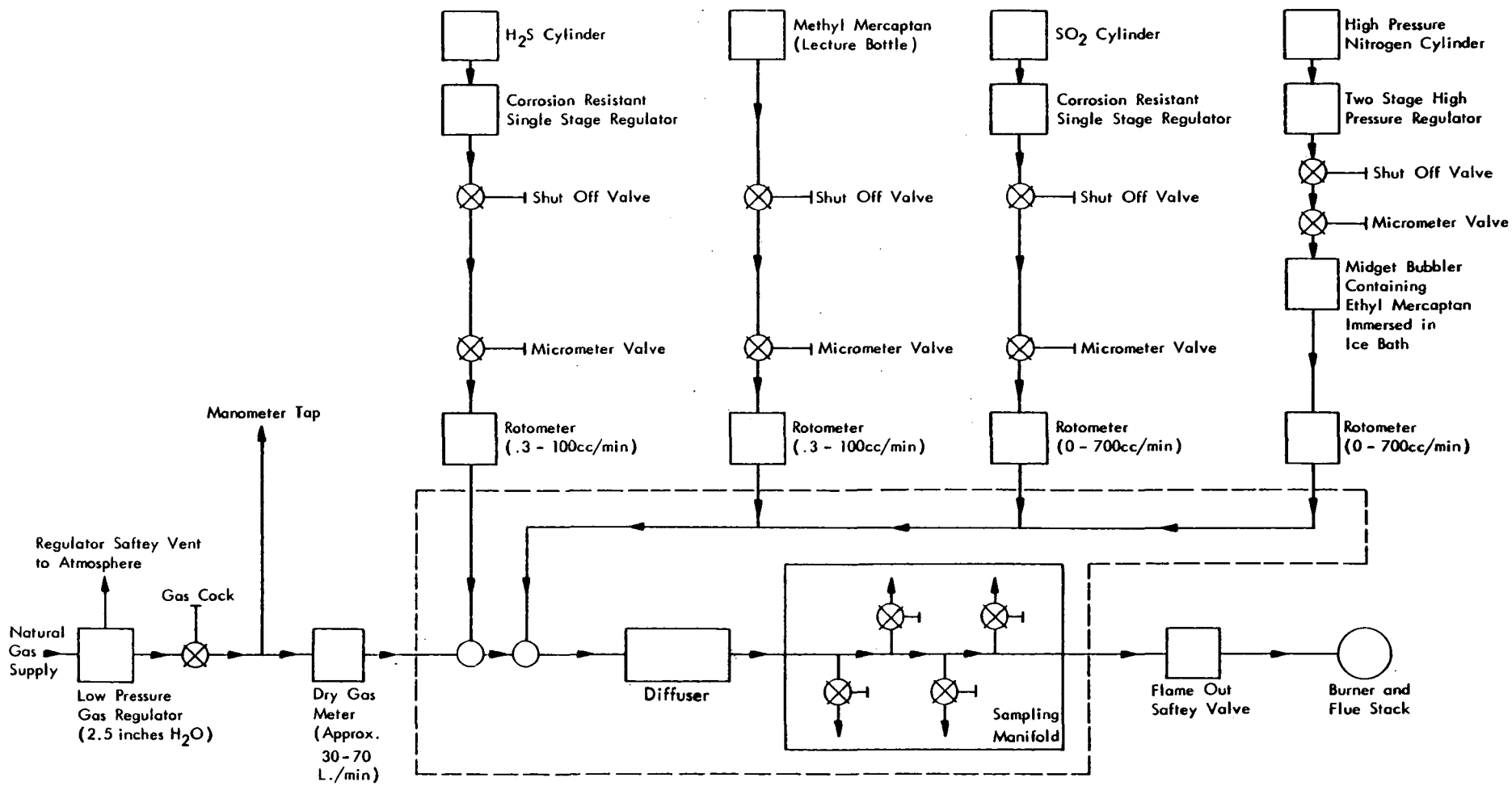

(Area enclosed in dotted lines is composed entirely of Teflon with the exception of sampling valves which are stainless steel)

Figure 1 - H_2S Sampling Manifold

The construction of the diffuser is detailed in Figure 2. The sampling manifold is a section of 1-in. O.D., Teflon pipe with center-line taps at 8-in. intervals.

After the system had been in operation for some time, the H_2S rotameter began fouling. After packing the line leading to the rotameter with glass wool, degreasing the micrometer valve, and using high-vacuum silicone grease to lubricate the valve threads, the rotameter gave no more trouble. Also, due to the highly offensive odors of the gases used and the parts per billion odor threshholds of the sulfur compounds, the system had to be very carefully sealed to avoid leakage to the room air. Thickwall Teflon tubing was used to avoid permeation through the tubing walls, especially wherever the gases are under pressure. To prevent the build up of objectionable or dangerous gas concentrations two exhaust blowers were operated continuously during testing. Even with 1,300 ft^3 of air per min being exhausted, some odor usually remained, but not enough to be a problem.

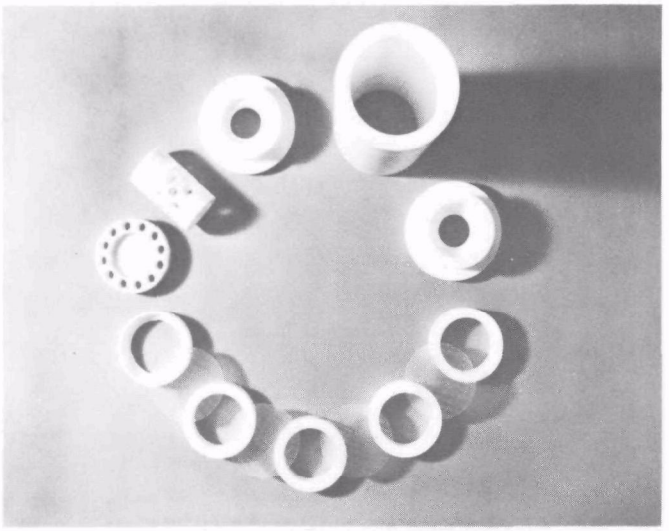

Photo 1 - Top View Diffuser Components: Housing, End Sections, Spiraler Tube, Teflon Screens, Retaining Rings.

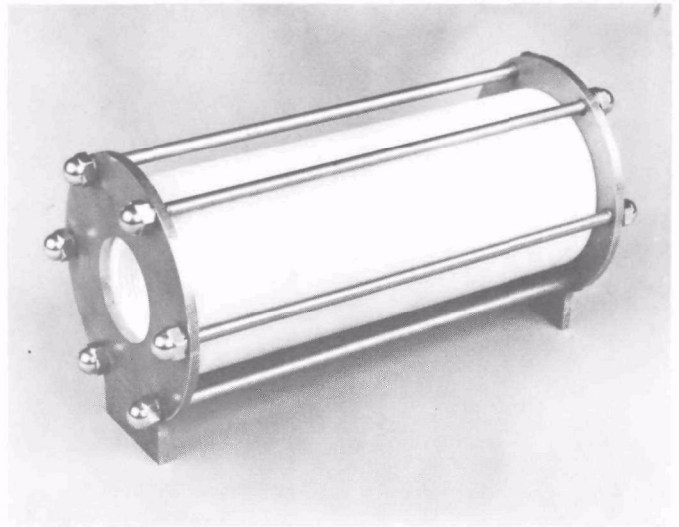

Photo 2 - External View of Diffuser.

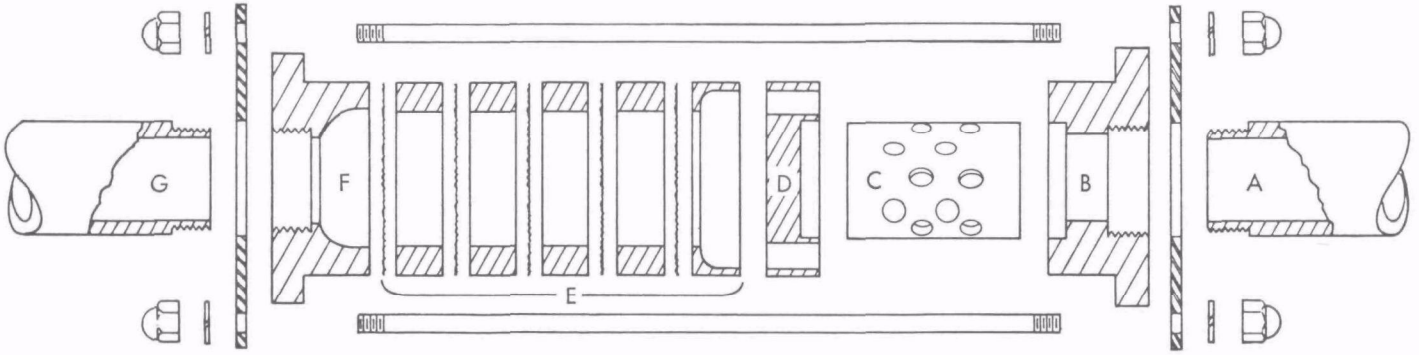

Exploded cross section of all-Teflon diffuser with inlet (A), end section (B), spiraler tube with angled holes (C), prescreen block with holes (D), five sets of fine mesh Teflon screen and retaining blocks (E), end section (F), exit (G) and diffuser housing (H). Double cross-hatched end plates are stainless steel.

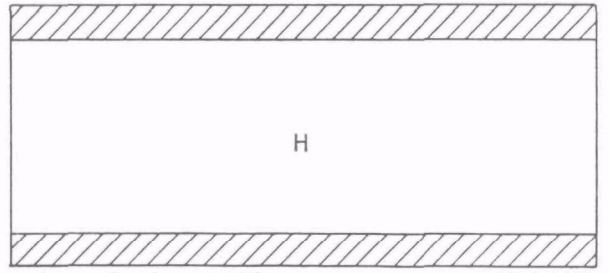

Figure 2 - Schematic Drawing and Photographs of the Diffuser

SECTION 3

EVALUATION OF ALTERNATIVE ANALYSIS PROCEDURES

A number of methods were initially examined as possible replacements for the alkaline $CdSO_4$ procedure. A number of other heavy metal salts have been used for the analysis of H_2S or mercaptans. Most of the existing methods report the analysis of H_2S or the analysis of mercaptans but seldom examine the analysis of H_2S in the presence of mercaptans.

Among the methods for analysis of H_2S are: (a) reaction to form methylene blue, measured photometrically, (b) oxidation to SO_2 with analysis of the SO_2 produced, (c) potentiometric titration of H_2S and mercaptans using $AgNO_3$ as titrant, and (d) collection in various heavy metal solutions followed usually by an iodometric titration. Mercaptans also can react with carbonyl compounds to form mercaptals or the direct oxidation to the disulfide is possible.

No simple method of measuring the H_2S reaction products independent of the mercaptal or disulfide products could be found. The methylene blue method is designed for trace analysis in the parts per billion range and gives erratic results at the levels found in fuel gases. Conversion to SO_2 before measurement would be a rather inconvenient procedure, since SO_2 is often present in significant amounts. The SO_2 would have to be measured twice, before and after the H_2S conversion.

The potentiometric method gives two separate breaks in the titration, first for H_2S and then for the mercaptans. However, the H_2S must first be trapped in sodium or potassium hydroxide to form the unstable, soluble Na_2S or K_2S which requires an analysis immediately after collection. The potentiometric titration also requires more specialized equipment than the iodometric methods and would respond to other redox reactions.

Since the solubilities of the metal sulfides and mercaptides are pH dependent, the main effort in the evaluation of alternate analysis procedures went into developing a buffered, metal-salt system that would collect the H_2S in high yields without collecting the mercaptans.

The first method tested was a cadmium acetate buffer solution that used an antifoam agent to prevent carryover of the impinger contents. A copy of this procedure is given in Appendix B. The initial tests of this method by EPA showed very promising results. At a pH of about 4.2 quantitative recovery of H_2S was possible using only two impingers. Methyl mercaptan began to be absorbed at a pH of 5 or more. The acetate solution did foam considerably but the addition of an antifoaming agent prevented foaming without interfering with the anaysis. Only the silicone-based, antifoam agents gave a stable solution, however, and then only if the emulsified form was used. Dow-Corning Antifoam-B[a] gave excellent results. (It was available from supply houses in small quantities.) An additional advantage of using the Antifoam-B was that the cadmium sulfide precipitate did not cake onto the walls of the impingers, but usually could be recovered with a water rinse.

After the encouraging EPA results, MRI proceeded to measure the collection efficiency and interference effects. By spiking the natural gas with H_2S, consistent results were obtained with a high collection efficiency. Analysis results using the cadmium acetate system are shown in Table 1. Using the basic procedure of Appendix B, collection efficiency of H_2S remains near 100% up to $\approx$ 300 mg/dscm and falls to about 90% at 700 mg/dscm. High levels of SO_2 have little or no effect. Mercaptans are collected with an efficiency approximately equal to that for H_2S, but only when H_2S is also present. Reducing the pH to about 3 has little effect. With 0.03 M cadmium acetate at pH 3 the H_2S collection efficiency is only about 5% lower than the original 0.04 M, pH 4.2 solution. However, the mercaptans are no longer collected with equal efficiency but instead the efficiency decreases with increasing mercaptan/H_2S ratio to as little as 10% for a 10:1 ratio (mercaptan as its H_2S equivalent) and reaches zero with no H_2S present. Under normal refinery conditions where the mercaptan content is 50 to 200% of the H_2S concentration, from 100 to 30% collection is obtained.

Due to the problems involved with a cadmium acetate absorbing solution, the evaluation was extended to include other metal salt systems. The results of testing in the additional systems are summarized in Table 2. Parallel testing was also done by EPA. The final conclusion was that 0.16 M $CdSO_4$ at pH 3 showed the most promise with 0.04 M cadmium formate at pH 3.2 as a second choice. The testing also indicated that Antifoam-B was still desirable in the absorbing solution and there was an excellent chance that the acid extraction of the impingers could be eliminated.

---

a/ Trade name.

TABLE 1. CADMIUM ACETATE ABSORBENT RESULTS

No.	Sample[a/]	H_2S Measured (mg/DSCM)	H_2S Calculated (mg/DSCM)	% Recovery[b/]
21	0.04 M, pH 4.2	6	0	--
22	0.04 M, pH 4.2	5	0	--
31	0.04 M, pH 4.2	95	84	113
32	0.04 M, pH 4.2	94	84	112
33	0.04 M, pH 4.2	198	196	101
34	0.04 M, pH 4.2	182	196	93
19	0.04 M, pH 4.2	283	281	101
20	0.04 M, pH 4.2	281	281	100
29	0.04 M, pH 4.2	348	387	90
30	0.04 M, pH 4.2	349	387	90
23	0.04 M, pH 4.2	489	552	89
24	0.04 M, pH 4.2	432	552	78
25	0.04 M, pH 4.2	657	728	90
26	0.04 M, pH 4.2	643	728	88
43	0.04 M, SO_2 = 1,700 ppm	383	394	97
44	0.04 M, SO_2 = 1,700 ppm	371	394	94
45	0.04 M, EtSH = 850 ppm	955	400	(91) 239
46	0.04 M, EtSH = 850 ppm	963	400	(91) 241
49	0.04 M, EtSH = 200 ppm	518	400	(94) 130
50	0.04 M, EtSH = 200 ppm	522	400	(94) 130
53	0.04 M, EtSH = 50 ppm	428	398	(98) 108
54	0.04 M, EtSH = 50 ppm	434	398	(100) 109
58	0.04 M, MeSH = 240 ppm	521	399	(89) 131
59	0.04 M, MeSH = 120 ppm	452	379	(96) 119
60	0.04 M, MeSH = 120 ppm	444	379	(94) 117
65	0.04 M, pH 4.2, SO_2 = 1,700 ppm EtSH = 170 ppm, MeSH = 100 ppm	573	385	(97) 149

a/ MeSH = Methyl mercaptan, EtSH = ethyl mercaptan.

b/ Numbers in parentheses are the collection efficiencies obtained from the total of all H_2S and mercaptans present. Since 1 mole of mercaptan titrates as 0.5 mole of H_2S and since, at standard conditions, 1 ppm H_2S = 1.54 mg/DSCM, 1 ppm of mercaptan is equivalent to 0.77 mg/DSCM of H_2S.

TABLE 1 (Concluded)

No.	Sample[a]	H_2S measured (mg/DSCM)	H_2S calculated (mg/DSCM)	% Recovery[b]
67	0.04 M, pH 3.3	378	430	88
68	0.04 M, pH 3.3	368	430	86
69	0.02 M, pH 3.0	260	410	63
70	0.02 M, pH 3.0	274	410	67
71	0.03 M, pH 3.0	348	410	85
72	0.03 M, pH 3.0	346	410	84
77	0.03 M, pH 3.0, MeSH = 100 ppm	420	409	(86) 103
78	0.03 M, pH 3.0, MeSH = 100 ppm	435	409	(90) 106
83	0.03 M, pH 3.0, MeSH = 160 ppm, EtSH = 400 ppm	463	391	(56) 118
84	0.03 M, pH 3.0, MeSH = 160 ppm, EtSH = 400 ppm	469	391	(57) 120
89	0.03 M, pH 3.0, MeSH = 160 ppm, EtSH = 450 ppm	4	0	--
90	0.03 M, pH 3.0, MeSH = 160 ppm, EtSH = 450 ppm	4	0	--
91	0.03 M, pH 3.0, MeSH = 100 ppm, EtSH = 500 ppm	148	87	(27) 170
92	0.03 M, pH 3.0, MeSH = 100 ppm, EtSH = 500 ppm	155	87	(28) 178
93	0.03 M, pH 3.0, MeSH = 500 ppm, EtSH = 750 ppm	158	83	(15) 190
94	0.03 M, pH 3.0, MeSH = 500 ppm, EtSH = 750 ppm	187	83	(18) 225

a/ MeSH = Methyl mercaptan, EtSH = ethyl mercaptan.

b/ Numbers in parentheses are the collection efficiencies obtained from the total of all H_2S and mercaptans present. Since 1 mole of mercaptan titrates as 0.5 mole of H_2S and since, at standard conditions, 1 ppm H_2S = 1.54 mg/DSCM, 1 ppm of mercaptan is equivalent to 0.77 mg/DSCM of H_2S.

TABLE 2. TEST RESULTS OF $CdSO_4$, Cd FORMATE, AND Zn ACETATE ABSORBING REAGENT SYSTEMS

No.	Sample[a]	H_2S Measured (mg/DSCM)	H_2S Calculated (mg/DSCM)	% Recovery
101	0.04 M $CdSO_4$, pH 5, 2 Impingers	417	620	67
102	0.04 M $CdSO_4$, pH 5, 3rd Impinger, 0.04 M $CdSO_4$, pH > 7[b]	496	620	80
107	0.08 M $CdSO_4$, pH 5, 2 Impingers	715	787	91
108	0.08 M $CdSO_4$, pH 5, 3rd Impinger, 0.04 M, $CdSO_4$, pH > 7[b]	761	787	97
165	0.16 M $CdSO_4$, pH 3, 3 Impingers, MeSH = 250 ppm	290	312	93
167	0.16 M $CdSO_4$, pH 3, 3 Impingers	283	329	86
169	0.16 M $CdSO_4$, pH 3, 3 Impingers, MeSH = 350 ppm	321	312	103
171	0.16 M $CdSO_4$, pH 3, 3 Impingers, MeSH = 350 ppm	323	313	103
175	0.16 M $CdSO_4$, pH 3, 3 Impingers	304	314	97
147	0.08 M $CdSO_4$, 3 Impingers	486	523	93
148	0.08 M $CdSO_4$, 3 Impingers	491	523	94
151	0.08 M $CdSO_4$, 3 Impingers, MeSH = 500 ppm	322	284	113
152	0.08 M $CdSO_4$, 3 Impingers, MeSH = 500 ppm	325	284	114
127	0.04 M Cd Formate, pH 3.2	511	572	89
128	0.04 M Cd Formate, pH 3.2	525	572	92
129	0.04 M Cd Formate, pH 3.2, MeSH = 350 ppm	571	570	100
130	0.04 M Cd Formate, pH 3.2, MeSH = 350 ppm	587	570	103
141	0.04 M Cd Formate, pH 3.2	361	372	97
142	0.04 M Cd Formate, pH 3.2	359	372	97
143	0.04 M Cd Formate, pH 3.2, MeSH = 230 ppm	391	376	104
144	0.04 M Cd Formate, pH 3.2, MeSH = 230 ppm	409	376	109
153	0.04 M Cd Formate, pH 3.2	250	271	92
157	0.04 M Cd Formate, pH 3.2	280	364	77
155	0.04 M Cd Formate, pH 3.2, MeSH = 450 ppm	319	349	91
154	0.08 M Zn Acetate	290	271	107
158	0.08 M Zn Acetate	315	364	87
156	0.08 M Zn Acetate, MeSH = 450 ppm	466	349	134

a/ MeSH = Methyl mercaptan.
b/ Concentrated NaOH added until formation of $Cd(OH)_2$ precipitate.

SECTION 4

TESTS FOR RUGGEDNESS AND COLLECTION EFFICIENCY

Three impingers containing 0.16 M cadmium sulfate absorbing solution at pH 3.0 was chosen as the procedure for further development. A ruggedness test was then designed and run to test the effect of 14 procedure variables. Details of the ruggedness test design are given in Appendix C.

A ruggedness test[1,2] is an experimental design for evaluating a set of variables in a minimal number of runs. For n variables a ruggedness test would have n+1 runs. For design simplicity the number of runs is usually chosen to be a power of 2 with dummy variables added if necessary to yield 2^x-1 variables. For each variable "high" and "low" conditions are assigned, and each run consists of a different set of "high" and "low" conditions for each variable. A complete test includes an equal number of "high" and "low" condition runs for each variable. The statistical analysis of the results factors together all "high" runs for each variable and compares them with the "low" runs for that variable. The final result is a significance level for each variable at the "high" and "low" conditions chosen.

The ruggedness test design is based upon the assumptions that all variables are independent of one another and that all variables not analyzed "average out" for all runs. If either of these assumptions fail, the dummy variables will become significant. An additional problem with a ruggedness test is that the two conditions for each variable must be carefully chosen to represent reasonable variations for each variable since the variable's significance is a measure of the effect of changing that variable between the two conditions.

1/ Stowe, R. A., and R. P. Mayer, Ind. and Eng. Chem., 58:2, pp. 36-40,(1966).
2/ Youden, W. J., Statistical Techniques for Collaborative Tests, Assoc. of Official Analytical Chemists, Washington, D.C., pp. 64 (1973).

The results of the ruggedness test are shown in Table 3. A separate test for significance was made for the blank values and for the final results. In both cases, dummy variables were found to be significant. This is partially due to second- or higher-order interaction of the variables.

Impinger tip diameter, flow rate and purge time are all dummy variables for the blanks. The impinger solution pH is a significant variable for both blanks and final results. Specifying a pH of 3.0 $\pm$ 0.1 should control this variable. $CdSO_4$ concentration is also critical to both blanks and final results. Normal weighing errors and impurity levels should not cause trouble in this variable. The aging effect on the blank should normally have no effect since blanks must be measured daily. The effect of impinger tip to bottom spacing on the final result and the effects on the blanks of reaction time, presence of Antifoam-B, amount of HCl added to the I_2 and impinger extraction were the subjects of further tests.

To check the effect of the bottom spacing of the impinger tip, trains were run with all conditions identical except that one train had a spacing of 2 to 4 mm and the other train had a 5 to 7 mm spacing. In two trials, the 2 to 4 mm set gave 2 to 4% higher collection.

Tests were also made to determine the effects of reaction time and amount of acid on the titration blank. In the first set, 45 ml of pH 3, 0.16 M $CdSO_4$ with 50 ml of 0.01 M I_2 had varying amounts of 10% HCl added and were titrated immediately. With no acid, 5 ml 10% HCl, and 50 ml of 10% HCl, the respective titrations were 30.16 ml, 30.07 ml, and 30.30 ml. With a 30 min delay before titration, the respective titrations were 29.86 ml, 30.06 ml, and 30.34 ml. Thus, with no acid, part of the iodine was consumed, but neither acid concentration showed a significant change with time. The fact that the immediate titration of blanks containing 5 ml of acid gave a lower value than without added acid indicates that the small amount of H_2SO_4 in the adsorbing reagent is not sufficient to provide a stoichiometric reaction. The increased titrant volumes with 50 ml of acid reflect the acid-catalyzed air oxidation of iodide.

From the results of these tests, a possible alternate method of analysis was formulated. By adding 5 ml of HCl and extracting the impingers with only water, the major problem of extraction could be avoided, the analysis greatly simplified, and analysis time shortened. To allow this change, 10 drops of Antifoam-B <u>must</u> be added in each liter of absorbing solution or large amounts of CdS will remain on the impinger walls.

To test the modified method, a test of collection efficiency was made. Adding about 300 mg/m^3 of H_2S to the gas stream, each method of analysis (water extraction, 5 ml of acid versus extraction with iodine containing 50 ml of acid; Antifoam-B used in both) was tested against the performance

TABLE 3. PROCEDURE VARIABLES AND RESULTS OF RUGGEDNESS TEST

Variable	Low Level	High Level	Significance Level[a] Blank	Significance Level[a] Result
Temperature	0°C	25°C	- (1.6)[b]	- (1.5)
Impinger tip to bottom spacing	2-4 mm	5-7 mm	- (0.5)[b]	95% (6.1)
Impinger tip diameter	1-1.02 mm	1.02-1.04 mm	95% (4.8)[b]	- (0.3)
Impinger solution volume	10 ml	20 ml	- (0.0)	- (0.0)
Impinger solution pH	2.5	3.5	90% (3.4)	90% (4.4)
Sampling flow rate	0.8 ℓ/min	1.5 ℓ/min	99% (116)[b]	- (0.1)
Purge time	10 min	20 min	99% (22)[b]	- (0.5)
Reaction time before titration	15 min	45 min	99% (9.7)	- (1.2)
Impinger solution age	1 day	1 week	99% (44)	- (0.7)
$CdSO_4$ concentration	0.08 M	0.24 M	99% (340)	99% (24)
Shaking of iodine flask	2 sec	60 sec	- (0.5)	- (0.0)
Antifoam B	None	10 drops/ℓ	99% (31)	- (0.0)
HCl addition to I_2	5 ml	50 ml	99% (375)	- (0.5)
Extraction of impingers	None	Yes	99% (640)	- (1.6)
Dummy	-	-	- (3)	95% (5.9)

a/ Numbers in parentheses are the F-value results of ruggedness test.
b/ Dummy variable for blanks.

of an identical train with NaOH added to the absorbing solution to create an alkaline pH with some $Cd(OH)_2$ present. The alkaline trains were extracted with a mixture of 50 ml of HCl and 50 ml of I_2. Separate blanks were made for each set of conditions. It was found that the alkaline cadmium will absorb essentially all of the H_2S in the first impinger. With 50 ml of acid and iodine extraction, 94 and 98% of the H_2S was collected relative to the alkaline cadmium trains. With 5 ml of acid* and no iodine extraction, 99 and 96% was collected relative to the alkaline cadmium trains. Only a slight yellow film was left in the impingers after the water rinse.

Further tests of collection efficiency for the modified method (0.16 M $CdSO_4$, pH 3, with Antifoam-B, water extraction, 5 ml of acid) using an alkaline $CdSO_4$ reference showed 93% efficiency at 100 mg/m^3 and 97% efficiency at 400 mg/m^3. The collection efficiency appears to be 96 $\pm$ 2% up to 400 mg/m^3 of H_2S.

Checks were also made of the methyl mercaptan (CH_3SH) and ethyl mercaptan (C_2H_5SH) interferences. The results are given in Table 4.

TABLE 4. MEASUREMENT OF METHYL AND ETHYL MERCAPTAN INTERFERENCES

Measured value (mg/m^3 as H_2S)	CH_3SH present (mg/m^3 as H_2S)	C_2H_5SH present (mg/m^3 as H_2S)
211	140	--
228	$>$ 387	--
214	--	197
236	--	$>$ 363
245	$>$ 300	$>$ 200
219	80	140

Note: H_2S levels for all tests were 200 $\pm$ 10 mg/m^3.

The quantity of mercaptan present was measured using a train of alkaline cadmium sulfate. The higher levels of mercaptans showed heavy precipitates in the last impinger, so these are minimum values.

The results obtained from the ruggedness and efficiency tests were used to rewrite the procedure in preparation for field trials at refineries. A copy of this procedure is given in Appendix D.

* This amount was changed to 10 ml of acid in the final procedure to provide a better safety margin for dissolving the cadmium sulfide precipitate.

SECTION 5

FIELD TESTING

Field tests of the proposed method were conducted by MRI in October 1975, to determine if the method functions properly on actual sources and to refine the method in preparation for a collaborative test. Three refineries were selected for the field trials which represented a wide range of sour feedstocks and with a number of different types of sample sources.

The first refinery tested operated primarily on a sour West Texas feedstock. This site was also tentatively selected for the collaborative test. The results of testing are summarized in Table 5. Parallel trains were run during all tests.

TABLE 5. FIELD TEST RESULTS - WEST TEXAS FEEDSTOCK

Test No.	Stream	Date	H_2S measured (mg/m^3)	
1	Fuel gas treater	10/15/75	1,140	1,010
2	Fuel gas treater	10/15/75	62	78
3	Fuel gas treater	10/15/75	109	109
4	Fuel gas treater	10/15/75	225	139
5	Sulfur plant fuel gas	10/16/75	8	9
6	Sulfur plant fuel	10/16/75	4	5

The sampling point of the fuel gas treater was downstream from a diethanolamine scrubber. The scrubber was not operating at maximum efficiency during the tests and was further upset by occasional input overloads. An existing sample tap was used that was located at a low point in the pipe. A diagram of the sample conditioning system is shown in Figure 3. Significant amounts of condensate, primarily oily, sulfur-loaded amine, collected in the sample lines and had to be drained frequently. None of the amine ever appeared in the impingers. The sulfur plant fuel gas was one of the few streams sampled which was at a pressure low enough to not require a pressure regulator in the sampling system. This was a dry stream with barely detectable amounts of H_2S. Test No. 6 was run for 60 min at 1 liter/min and the first cadmium sulfate impinger had a definite yellow color, although no precipitate was evident.

For the west Texas tests, as well as the following ones, a gas chromatograph (GC) equipped with a flame photometric detector was taken to the field sites for confirmation of the test results. A β,β'-oxydipropionitrile column was installed in the GC and separated the mercaptans from H_2S. However, the detector had excessive drift during all tests and only qualitative results were obtainable. Methyl and ethyl mercaptan were detected in the fuel gas treater stream in moderate amounts. At the sulfur plant, the levels were too low to obtain any definite information.

The second field test was conducted at a refinery which used a western Alberta feedstock. Test results are shown in Table 6. Duplicate trains were run here and the basic test procedure was the same as that used in the first test.

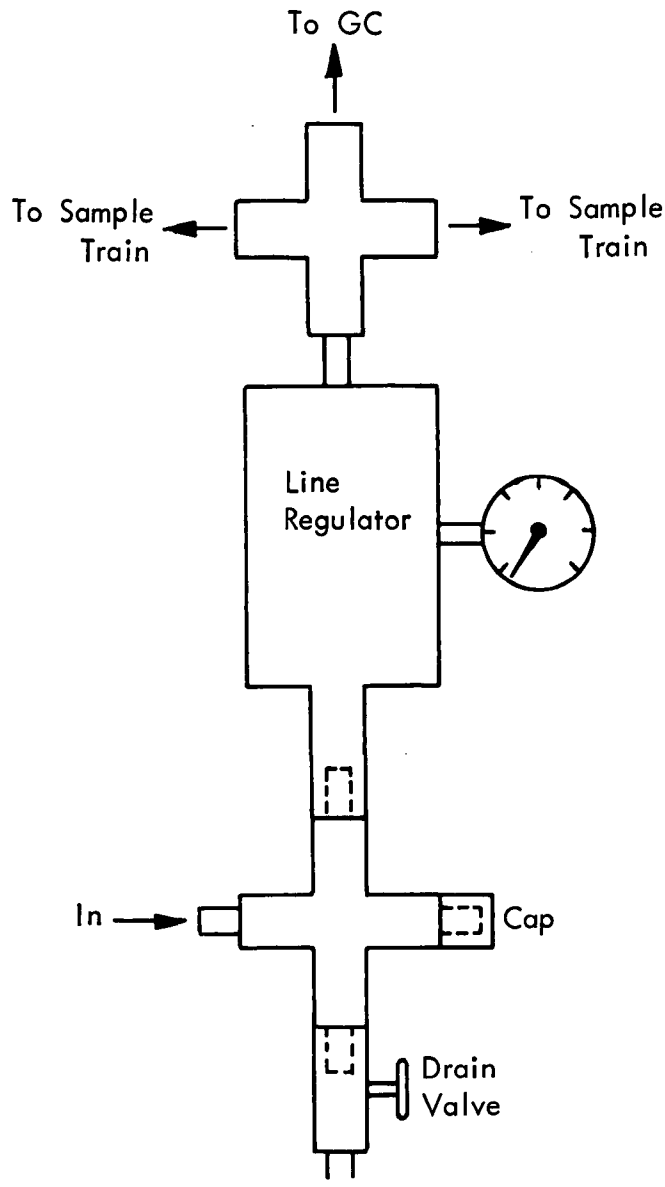

Figure 3 - Sample Conditioning System for Field Tests

TABLE 6. FIELD TEST RESULTS - WESTERN ALBERTA FEEDSTOCK

Test No.	Stream	Date	H_2S measured (mg/m^3)	
1	Fuel gas K.O. drum	10-22	1,520	1,520
2	Fuel gas K.O. drum	10-22	1,600	1,670
3	MEA outlet	10-22	212	210
4	MEA outlet	10-22	258	253
5	Natural gas makeup	10-22	30	29
6	Natural gas makeup	10-22	18	34
7	Platformer sep. off-gas	10-23	6	7
8	Platformer sep. off-gas	10-23	7	3
9	Platformer stab. overhead accum. off-gas	10-23	22	17
10	Platformer stab.	10-23	27	22

The streams sampled for Tests Nos. 5 through 10 were dry with low H_2S levels, in a methane/hydrogen mixture, except for Tests Nos. 9 and 10, which contained large amounts of C_3 and C_4 hydrocarbons that extinguished the flame in the GC detector. The fuel-gas knockout-drum samples had appreciable quantities of water present and the MEA (monoethanolamine scrubber) outlet contained both water and monoethanolamine condensate. The method functioned well at this refinery with no unusual occurrences. All streams had very little mercaptan present.

The third field test was at a refinery operated on imported feedstock, primarily from sour middle east sources. Plant personnel made tests in parallel with MRI at this site. The plant personnel ran a single modified Method 11 train and a special train with a potentiometric analysis. The potentiometric procedure allowed the measurement of the H_2S and mercaptan concentrations from a double inflection point titration curve. The results of the testing are given in Table 7.

All of the streams sampled contained a 2:1 or 3:1 ratio of methyl mercaptan to H_2S. The first stream was dry, the remaining two streams were wet with monoethanolamine condensate. The last stream also contained some ethyl mercaptan. The refinery Method 11 results were limited by the use of a 1.0 ft^3/rev dry gas meter which would never complete even one-half of a revolution for a test. The second MRI result for Tests 5 and 6 was probably in error due to a leak in the sampling train. This leak was not

discovered until after testing was completed. The refinery Method 11 results tend to be higher than the other results, which may have been caused by the oversized dry gas meter. The MRI results are in general agreement with the refinery potentiometric results with a maximum difference of about 15%.

After the field tests the procedure write-up was revised in preparation for the collaborative test. The main changes dealt with the inclusion of a leak check before each run, and a rearrangement of the sampling train components to accommodate the normally positive pressure fuel gas streams. A general tightening of specifications and procedures was also made. A copy of the final revision, which was used for the collaborative test, appears in Appendix E.

TABLE 7. FIELD TEST RESULTS - MIDDLE EAST SOUR FEEDSTOCK

Test No.	Stream	Date	MRI Results H_2S measured (mg/m^3)		H_2S Refinery Results (mg/m^3) Method 11	Potentiometric
1	Unit 43	10-27	250	274	321	245
2	Unit 43	10-27	297	279	327	--
3	Unit 17	10-28	330	328	376	373
4	Unit 17	10-28	318	319	382	339
5	Unit 12	10-28	238	312	305	272
6	Unit 12	10-28	288	372	336	325

APPENDIX A

METHOD 11 - DETERMINATION OF HYDROGEN SULFIDE EMISSIONS FROM STATIONARY SOURCES

1.0 Principle and Applicability

1.1 Principle

Hydrogen sulfide (H_2S) is collected from the source in a series of midget impingers and reacted with alkaline cadmium hydroxide ($Cd(OH)_2$) to form cadmium sulfide (CdS). The precipitated CdS is then dissolved in hydrochloric acid and absorbed in a known volume of iodine solution. The iodine consumed is a measure of H_2S content of the gas. An impinger containing hydrogen peroxide is included to remove SO_2 as an interfering species.

1.2 Applicability

This method is applicable for the determination of hydrogen sulfide emissions from stationary sources only when specified by the test procedures for determining compliance with the new source performance standards.

2.0 Apparatus

2.1 Sampling Train

2.1.1 Sampling line - Six to 7 mm (1/4 in.) Teflon[a/] tubing to connect sampling train to sampling valve, with provisions for heating to prevent condensation. A pressure reduing valve prior to the Teflon sampling line may be required depending on sampling stream pressure.

2.2.2 Impingers - Five midget impingers, each with 30 ml capacity, or equivalent.

2.1.3 Ice bath container - To maintain absorbing solution at a constant temperature.

2.1.4 Silica gel drying tube - To protect pump and dry gas meter.

2.1.5 Needle valve, or equivalent - Stainless steel or other corrosion resistant material, to adjust gas flow rate.

2.1.6 Pump - Leak free, diaphragm type, or equivalent, to transport gas. (Not required if sampling stream under positive pressure.)

2.1.7 Dry gas meter - Sufficiently accurate to measure sample volume to within 1%.

2.1.8 Rate meter - Rotameter or equivalent, to measure a flow rate of 0 to 3 liters per minute (0.1 ft^3/min).

---

a/ Trade name.

2.1.9 Graduated cylinder - 25 ml.

2.1.10 Barometer - To measure atmospheric pressure within $\pm$ 2.5 mm (0.1 in.) Hg.

2.2 Sample Recovery

2.2.1 Sample container - 500 ml glass-stoppered iodine flask.

2.2.2 Pipette - 50 ml volumetric type.

2.2.3 Beakers - 250 ml.

2.2.4 Wash bottle - Glass.

2.3 Analysis

2.3.1 Flask - 500 ml glass-stoppered iodine flask.

2.3.2 Burett - One 50 ml.

2.3.3 Flask - 125 ml conical.

3.0 Reagents

3.1 Sampling

3.1.1 Absorbing solution - Cadmium hydroxide ($Cd(OH)_2$) - Mix 4.3 g cadmium sulfate hydrate (3 $CdSO_4 8H_2O$) and 0.3 g of sodium hydroxide (NaOH) in 1 liter of distilled water (H_2O). Mix well.

[NOTE: The cadmium hydroxide formed in this mixture will precipitate as a white suspension. Therefore, this solution must be thoroughly mixed before using to ensure an even distribution of the cadmium hydroxide.]

3.1.2 Hydrogen peroxide, 3% - Dilute 30% hydrogen peroxide to 3% as needed. Prepare fresh daily.

3.2 Sample Recovery

3.2.1 Hydrochloric acid solution (HCl), 10% by weight - Mix 230 ml of concentrated HCl (specific gravity 1.19) and 770 ml of distilled H_2O.

3.2.2 Iodine solution, 0.1 N - Dissolve 24 g potassium iodide (KI) in 30 ml of distilled H_2O in a 1 liter graduated cylinder. Weigh 12.7 g of resublimed iodine (I_2) in a weighing bottle and add to the potassium iodide

solution. Shake the mixture until the iodine is completely dissolved. Slowly dilute the solution to 1 liter with distilled H_2O, with swirling. Filter the solution, if cloudy, and store in a brown glass-stoppered bottle.

3.2.3 Standard iodine solution, 0.01 N - Dilute 100 ml of the 0.1 N iodine solution in a volumetric flask to 1 liter with distilled water. Standardize daily as follows: Pipette 25 ml of the 0.01 N iodine solution into a 125 ml conical flask. Titrate with standard 0.01 N thiosulfate solution (see Section 3.3.2) until the solution is a light yellow. Add a few drops of the starch solution and continue titrating until the blue color just disappears. From the results of this titration, calculate the exact normality of the iodine solution (see Section 5.1).

3.2.4 Distilled, deionized water.

3.3 Analysis

3.3.1 Sodium thiosulfate solution, standard 0.1 N - For each liter of solution, dissolve 24.8 g of sodium thiosulfate ($Na_2S_2O_3 \cdot 5H_2O$) in distilled water and add 0.01 g of anhydrous sodium carbonate (Na_2CO_3) and 0.4 ml of chloroform ($CHCl_3$) to stabilize. Mix thoroughly by shaking or by aerating with nitrogen for approximately 15 min, and store in a glass-stoppered glass bottle. Standardize frequently as follows: Weigh into a 500 ml volumetric flask about 2 g of potassium dichromate ($K_2Cr_2O_7$) weighed to the nearest milligram and dilute to the 500 ml mark with distilled H_2O. Use dichromate which has been crystallized from distilled water and oven-dried at 182 to 199°C (360 to 390°F). Dissolve approximately 3 g of potassium iodide (KI) in 50 ml of distilled water in a glass-stoppered, 500 ml conical flask, then add 50 ml of 10% hydrochloric acid solution. Pipette 50 ml of the dichromate solution into this mixture. Gently swirl the solution once and allow it to stand in the dark for 5 min. Dilute the solution with 100 to 200 ml of distilled water, washing down the sides of the flask with part of the water. Swirl the solution slowly and titrate with the thiosulfate solution until the solution is light yellow. Add 4 ml of starch solution and continue with a slow titration with the thiosulfate until the bright blue color has disappeared and only the pale green color of the chromic ion remains. From this titration, calculate the exact normality of the sodium thiosulfate solution (see Section 5.2).

3.3.2 Sodium thiosulfate solution, standard 0.01 N - Pipette 100 ml of the standard 0.1 N thiosulfate solution into a volumetric flask and dilute to 1 liter with distilled water.

3.3.3 Starch indicator solution - Suspend 10 g of soluble starch in 100 ml of distilled water and add 15 g of potassium hydroxide pellets. Stir until dissolved, dilute with 900 ml of distilled water, and let stand 1 hr. Neutralize the alkali with concentrated hydrochloric acid, using an

indicator paper similar to Alkacid[a] test ribbon, then add 2 ml of glacial acetic acid as a preservative. Test for decomposition by titrating 4 ml of starch solution in 200 ml of distilled water with 0.01 N iodine solution. If more than 4 drops of the 0.01 N iodine solution are required to obtain the blue color, make up a fresh starch solution.

4.0 Procedure

4.1 Sampling

4.1.1 Assemble the sampling train as shown in Figure A-1, connecting the five midget impingers in series. Place 15 ml of 3% hydrogen peroxide in the first impinger. Place 15 ml of the absorbing solution in each of the next three impingers, leaving the fifth dry. Place crushed ice around the impingers. Add more ice during the run to keep the temperature of the gases leaving the last impinger at about 20°C (70°F) or less.

4.1.2 Purge the connecting line between the sampling valve and the first impinger. Connect the sample line to the train. Record the initial reading of the dry gas meter as shown in Table A-1.

4.1.3 Open the flow control valve and adjust the sampling rate to 1.13 liters per minute (0.04 cfm). Read the meter temperature and record on Table A-1.

4.1.4 Continue sampling a minimum of 10 min. If the yellow color of cadmium sulfide is visible in the third impinger, analysis should confirm that the applicable standard has been exceeded. At the end of the samples time, close the flow control valve and read the final meter volume and temperature.

4.1.5 Disconnect the impinger train from the sampling line. Purge the train with clean ambient air for 15 min to ensure that all H_2S is removed from the hydrogen peroxide. Cap the open ends and move to the sample clean-up area.

4.2 Sample Recovery

4.2.1 Pipette 50 ml of 0.01 N iodine solution into a 250 ml beaker. Add 50 ml of 10% HCl to the solution. Mix well.

4.2.2 Discard the contents of the hydrogen peroxide impinger. Carefully transfer the contents of the remaining four impingers to a 500 ml iodine flask.

---

a/ Trade name.

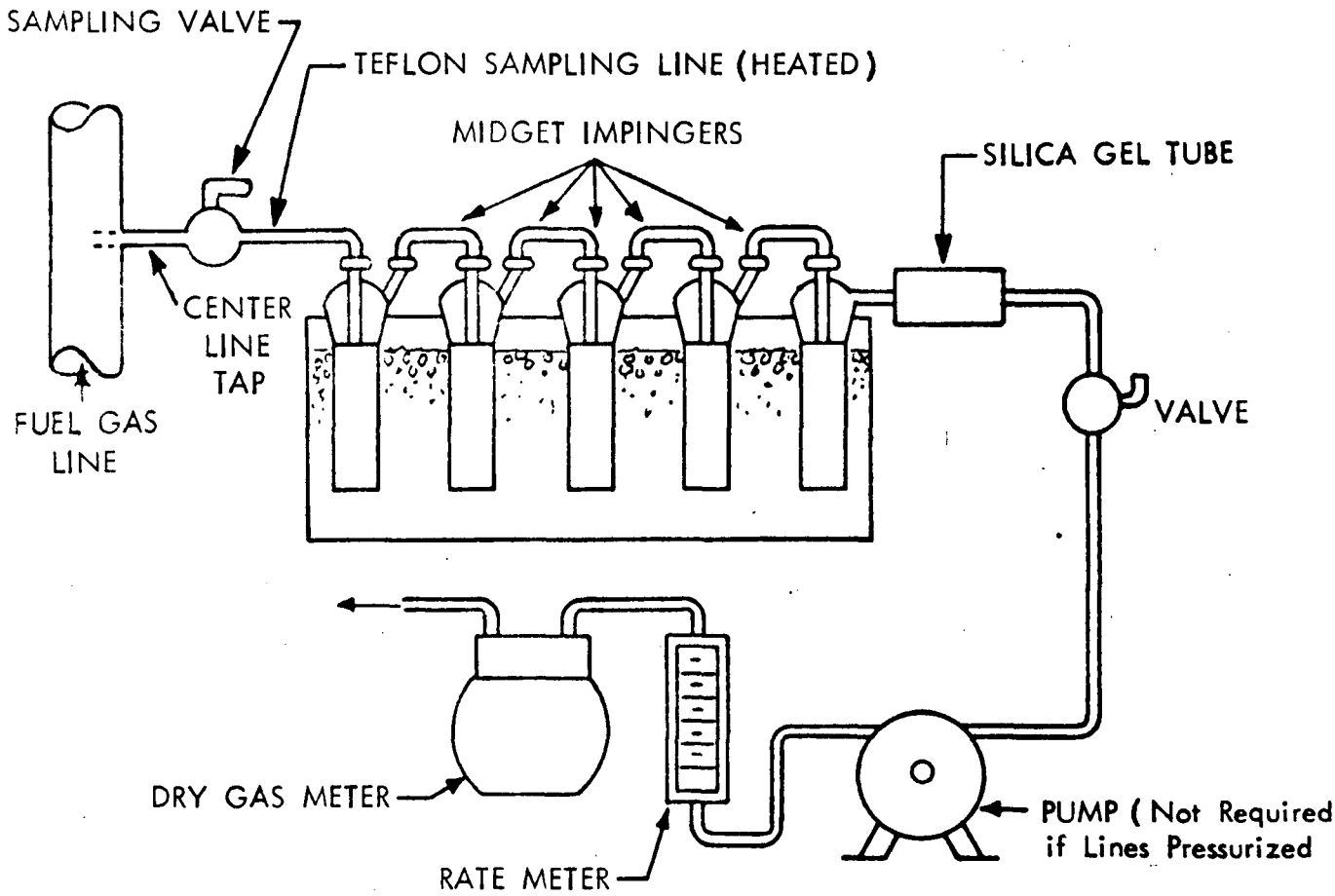

Figure A-1 - H_2S Sampling Train

TABLE A-1

FIELD DATA

Location _ _ _ _ _ _ _ _ _ _ _ _ _

Comments:

Test _ _ _ _ _ _ _ _ _ _ _ _ _ _ _

Date _ _ _ _ _ _ _ _ _ _ _ _ _ _ _

Operator _ _ _ _ _ _ _ _ _ _ _ _ _

Barometric Pressure _ _ _ _ _ _

Clock Time	Gas Volume Through Meter (Vm), ℓ (cu ft)	Rotameter Setting, ℓpm (cfm)	Meter Temperature, °C (°F)

5.0 Calculations

5.1 Normality of the Standard Iodine Solution

$$N_I = \frac{N_T V_T}{V_I} \qquad \text{(A-1)}$$

where:

N_I = normality of iodine, g-eq/liter;
V_I = volume of iodine used, ml;
N_T = normality of sodium thiosulfate, g-eq/liter; and
V_T = volume of sodium thiosulfate used, ml.

5.2 Normality of the Standard Thiosulfate Solution

$$N_T = 2.04 \frac{W}{V_T} \qquad \text{(A-2)}$$

where:

W = weight of $K_2Cr_2O_7$ used, g;
V_T = volume of $Na_2S_2O_3$ used, ml;
N_T = normality of standard thiosulfate solution, g-eq/liter; and
2.04 = conversion factor.

$$= \frac{(6 \text{ eq } I_2/\text{mole } K_2Cr_2O_7)\ (1{,}000 \text{ ml/liter})}{(294.2 \text{ g } K_2Cr_2O_7/\text{mole})\ (10 \text{ aliquot factor})}$$

5.3 Dry Gas Volume

Correct the sample volume measure by the dry gas meter to standard conditions [21°C (70°F) and 760 mm (29.92 in.)] Hg by using Equation A-3.

$$V_{m_{std}} = V_m \left(\frac{T_{std}}{T_m}\right) \left(\frac{P_{bar}}{P_{std}}\right) \qquad \text{(A-3)}$$

where:

$V_{m_{std}}$ = volume at standard conditions of gas sample through the dry gas meter, standard liters;
V_m = volume of gas sample through the dry gas meter (meter conditions), liters;
T_{std} = absolute temperature at standard conditions, 294°K;
T_m = average dry gas meter temperature, °K;
P_{bar} = barometric pressure at the orifice meter, mm Hg; and
P_{std} = absolute pressure at standard conditions, 760 mm Hg.

4.2.3 Rinse the four absorbing impingers and connecting glassware with three portions of the acidified iodine solution. Use the entire 100 ml of acidified iodine for this purpose. Immediately after pouring the acidified iodine into an impinger, stopper it and shake for a few moments before transferring the rinse to the iodine flask. Do not transfer any rinse portion from one impinger to another; transfer it directly to the iodine flask. Once acidified iodine solution has been poured into any glassware containing cadmium sulfide sample, the container must be tightly stoppered at all times except when adding more solution, and this must be done as quickly and carefully as possible. After adding any acidified iodine solution to the iodine flask, allow a few minutes for absorption of the H_2S into the iodine before adding any further rinses.

4.2.3 Titrate the blanks in the same manner as the samples.

4.2.4 Follow this rinse with two more rinses using distilled water. Add the distilled water rinses to the iodine flask. Stopper the flask and shake well. Allow about 30 min for absorption of the H_2S into the iodine, then complete the analysis titration.

[CAUTION: Keep the iodine flask stoppered except when adding sample or titrant.]

4.2.5 Prepare a blank in an iodine flask using 45 ml of the absorbing solution, 50 ml of 0.01 N iodine solution, and 50 ml of 10% HCl. Stopper the flask, shake well and analyze with the samples.

4.3 Analysis

[NOTE: This analysis titration should be conducted at the sampling location in order to prevent loss of iodine from the sample. Titration should never be made in direct sunlight.

4.3.1 Titrate the solution in the flask with 0.01 N sodium thiosulfate solution until the solution is light yellow. Add 4 ml of the starch indicator solution and continue titrating until the blue color just disappears.

5.4 Concentration of H_2S

Calculate the concentration of H_2S in the gas stream at standard conditions using Equation A-4.

$$C_{H_2S} = \frac{K[(V_I N_I - V_T N_T)\ \text{sample} - (V_I N_I - V_T N_T)\ \text{blank}]}{V_{m_{std}}} \qquad \text{(A-4)}$$

where (metric units):

C_{H_2S} = concentration of H_2S at standard conditions, mg/dscm;
K = conversion factor = 17.0×10^3

$$= \frac{(34.07\ \text{g/mole}\ H_2S)\ (1{,}000\ \text{liters/m}^3)\ (1{,}000\ \text{mg/g})}{(1{,}000\ \text{ml/liter})\ (2H_2S\ \text{eq/mole})}$$

V_I = volume of standard iodine solution, ml;
N_I = normality of standard iodine solution, g-eq/liter;
V_T = volume of standard sodium thiosulfate solution, ml;
N_T = normality of standard sodium thiosulfate solution, g-eq/liter; and
$V_{m_{std}}$ = dry gas volume at standard conditions, liters

6.0 References

6.1 Determination of Hydrogen Sulfide, Ammoniacal Cadmium Chloride Method, API Method 772-54. In: Manual on Disposal of Refinery Wastes, Vol. V: Sampling and Analysis of Waste Gases and Particulate Matter, American Petroleum Institute, Washington, D.C., 1954.

6.2 Tentative Method for Determination of Hydrogen Sulfide and Mercaptan Sulfur in Natural Gas, Natural Gas Processors Association, Tulsa, Oklahoma, NGPA Publication NO. 2265-65, 1965.

APPENDIX B

TENTATIVE METHOD FOR THE DETERMINATION OF HYDROGEN SULFIDE EMISSIONS FROM STATIONARY SOURCES[a]

CADMIUM ACETATE PROCEDURE

a/ A tentative method is one which has been carefully drafted from available experimental information, reviewed editorially within the Methods Standardization and Performance Evaluation Branch, QAEML, and has undergone extensive laboratory evaluation. The method is still under investigation and, therefore, is subject to revision.

1.0 Principle and Applicability

1.1 Principle

Hydrogen sulfide (H_2S) is collected from a source in a series of midget impingers and absorbed in buffered cadmium acetate solution to form cadmium sulfide (CdS). The latter compound is then dissolved in hydrochloric acid and measured iodometrically. An impinger containing hydrogen peroxide is included to remove SO_2 as an interfering species.

1.2 Applicability

This method is applicable for the determination of hydrogen sulfide emissions from stationary sources only when specified by the test procedures for determining compliance with the new source performance standards.

2.0 Range and Sensitivity

The limit of detection is approximately 8 mg/m^3 (6 ppm). The maximum of the range is 740 mg/m^3 (520 ppm). The lower limit of the range may be extended by collecting a larger volume of gas sample; the upper limit by increasing the concentration of the iodine solution.

3.0 Interferences

Any compound that reduces iodine or oxidizes iodide ion will interfere in this procedure, provided it is collected in the cadmium acetate impingers. Sulfur dioxide in concentrations of up to 0.1 mole percent is eliminated by the peroxide solution. Thiols in concentrations of 0.2% and carbon oxysulfide of 20% do not interfere. Certain carbonyl-containing compounds react with iodine and produce recurring endpoints. However, acetaldehyde and acetone at concentrations of 1 and 3%, respectively, do not interfere.

Entrained hydrogen peroxide produces a negative interference equivalent to 100% of that of an equimolar quantity of hydrogen sulfide. Avoid the ejection of hydrogen peroxide into the cadmium acetate impingers.

4.0 Precision and Accuracy

Replicate analyses should not deviate by more than 5% relative standard deviation. The accuracy of hydrogen sulfide measurements has been established at 96 $\pm$ 2% of the absolute value based on a known standard.

5.0 Apparatus

5.1 Sampling Train

5.1.1 Sampling line - Six to 7 mm (1/4 in.) Teflon[a/] tubing to connect sampling train to sampling valve, with provisions for heating to prevent condensation. A pressure reduction valve prior to the Teflon sampling line may be required depending on sampling stream pressure.

5.1.2 Impingers - Five midget impingers, each with 30 ml capacity.

5.1.3 Ice bath container - To maintain absorbing solution at a low temperature.

5.1.4 Silica gel drying tube - To protect pump and dry gas meter.

5.1.5 Needle valve or equivalent - Stainless steel or other corrosion resistant material to adjust gas flow rate.

5.1.6 Pump - Leak free, diaphragm-type, or equivalent, to transport gas. (Not required if sampling stream is under positive pressure.)

5.1.7 Dry gas meter - Sufficiently accurate to measure sample volume to within 1% and calibrated over the range of flow rates used in sampling.

5.1.8 Flow meter - Rotameter or equivalent, to measure a 0.5 to 2.0 lpm (1 to 4 CFH) flow rate.

5.1.9 Graduated cylinder - 25 ml size.

5.1.10 Barometer - To measure atmospheric pressure to within ± 2.5 mm (0.1 in.) Hg.

5.2 Sample Recovery

5.2.1 Sample container - Iodine flask, glass-stoppered. 500 ml size.

5.2.2 Pipette - 50 ml volumetric type.

5.2.3 Beakers - 250 ml.

5.2.4 Wash bottle.

5.3 Analysis

5.3.1 Flask - 500 ml glass-stoppered iodine flask.

---

a/ Trade name.

5.3.2 Burette - 50 ml.

5.3.3 Flask - 125 ml, Erlenmeyer.

6.0 Reagents

Unless otherwise indicated, it is intended that all reagents conform to the specifications established by the Committee on Analytical Reagents of the American Chemical Society, where such specifications are available. Otherwise, use best available grade.

6.1 Sampling

6.1.1 Cadmium acetate absorbing solution - Dissolve 10.7 g of $Cd(C_2H_3O_2)_2\ 2H_2O$ and 5.0 ml of glacial acetic acid in 1 liter of deionized distilled water. Add several drops of a suitable antifoam agent (6.1.3).

6.1.2 Hydrogen peroxide, 3% - Dilute 30% hydrogen peroxide to 3% as needed. Prepare fresh daily.

6.1.3 Antifoam agent - Fisher Antifoam B[a] or Hodag Antifoam MG-80[a] have been found effective in preventing foaming of the absorbing solution during sampling.

6.1.4 Water - Deionized, distilled, to conform to ASTM specifications D1193-72, Type 3.

6.2 Sample Recovery

6.2.1 Hydrochloric acid solution (HCl), 10% by weight. Mix 230 ml of concentrated HCl (specific gravity 1.19) and 770 ml of deionized, distilled water.

6.2.2 Iodine solution, 0.1 N - Dissolve 24 g of potassium iodide (KI) in 30 ml of deionized, distilled water. Add 12.7 g of resublimed iodine (I_2) to the potassium iodide solution. Shake the mixture until the iodine is completely dissolved. Slowly dilute the solution to 1 liter with deionized, distilled water, with swirling. Filter the solution if cloudy and store in a brown glass reagent bottle.

6.2.3 Standard iodine solution, 0.01 N - Dilute 100 ml of the 0.1 N iodine solution to 1 liter with deionized, distilled water. Standardize daily as in Section 8.1 below:

---

a/ Trade name.

6.3 Analysis

6.3.1 Sodium thiosulfate solution, standard 0.1 N - Dissolve 24.8 g of sodium thiosulfate ($Na_2S_2O_3$ $5H_2O$) in 1 liter of deionized, distilled water and add 0.01 g of anhydrous sodium carbonate (Na_2CO_3) and 0.4 ml of chloroform ($CHCl_3$) to stabilize. Mix thoroughly by shaking or by aerating with nitrogen for approximately 15 min, and store in a glass-stoppered reagent bottle. Standardize as in Section 8.2 below:

6.3.2 Sodium thiosulfate solution, standard 0.01 N - Pipette 50 ml of the standard 0.1 N thiosulfate solution into a volumetric flask and dilute to 500 ml with distilled water.

6.3.3 Starch indicator solution - Suspend 10 g of soluble starch in 100 ml of deionized, distilled water and add 15 g of potassium hydroxide (KOH) pellets. Stir until dissolved, dilute with 900 ml of deionized distilled water and let stand for 1 hr. Neutralize the alkali with concentrated hydrochloric acid, using an indicator paper similar to Alkacid[a/] test ribbon, then add 2 ml of glacial acetic acid as a preservative.

[NOTE: Test starch indicator solution for decomposition by titrating 4 ml of starch solution in 200 ml of distilled water with 0.01 N iodine solution. If more than 4 drops of the 0.01 N iodine solution are required to obtain the blue color, a fresh solution must be prepared.]

7.0 Procedure

7.1 Sampling

7.1.1 Assemble the sampling train as shown in Figure B-1, connecting the five midget impingers in series. Place 15 ml of 3% hydrogen peroxide solution in the first impinger. Leave the second impinger empty. Place 15 ml of the cadmium acetate absorbing solution in the third and fourth impingers and leave the fifth impinger empty. Place impinger assembly in ice bath container and add crushed ice around the impingers. Add more ice during the run, if needed.

7.1.2 Purge the connecting line between the sampling valve and the first impinger. Connect the sample line to the train. Record the initial reading of the dry gas meter as shown in Table B-1.

7.1.3 Open the flow control valve and adjust the sampling rate to approximately 1 liter per minute (0.04 cfm). Read the meter temperature and record on Table B-1.

7.1.4 Continue sampling a minimum of 10 min. At the end of the sampling time, close the flow control valve and record the final volume and temperature readings in Table B-1.

a/ Trade name.

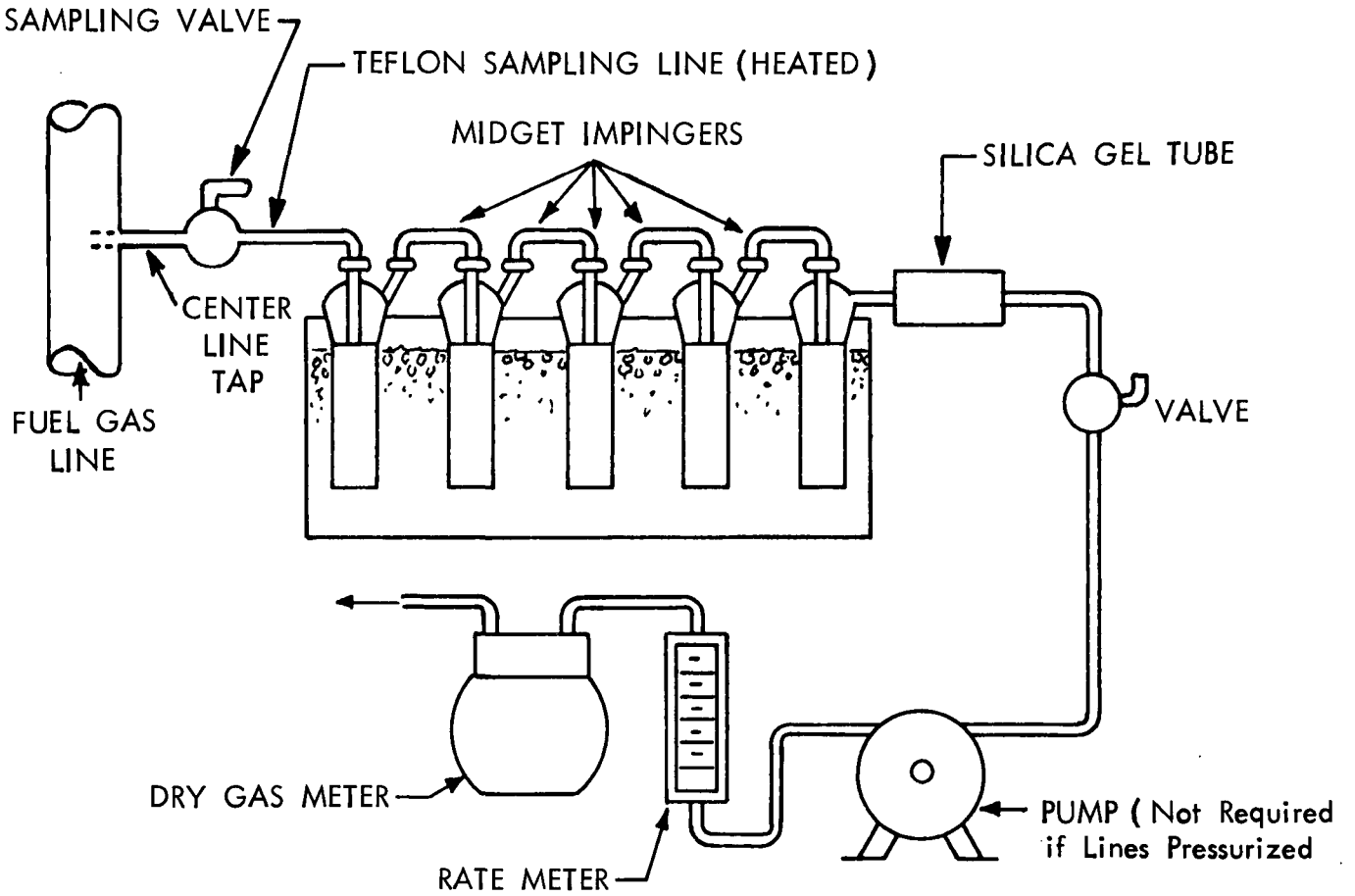

Figure B-1 - H_2S Sampling Train

TABLE B-1

FIELD DATA

Location _ _ _ _ _ _ _ _ _ _ _ _ _ _

Test _ _ _ _ _ _ _ _ _ _ _ _ _ _ _ _

Date _ _ _ _ _ _ _ _ _ _ _ _ _ _ _ _

Operator _ _ _ _ _ _ _ _ _ _ _ _ _ _

Barometric Pressure _ _ _ _ _ _

Comments:

Clock Time	Gas Volume Through Meter (Vm), ℓ (cu ft)	Rotameter Setting, ℓpm (cfm)	Meter Temperature, °C (°F)

7.1.5 Disconnect the impinger train from the sampling line. Purge the train with clean ambient air for 15 min to ensure that all H_2S is removed from the hydrogen peroxide. (Clean ambient air can be provided by passing air through a charcoal filter.) Cap the open ends and remove to a clean area away from sources of heat for sample cleanup. The area should be well lighted, but not exposed to direct sunlight.

7.2 Sample Recovery

7.2.1 Discard the contents of the hydrogen peroxide impinger. Carefully rinse the contents of the third, fourth, and fifth impingers into a 500 ml iodine flask.

7.2.2 Pipette exactly 50 ml of 0.01 N iodine solution into a 250 ml beaker. Add 50 ml of 10% HCl to the solution. Mix well.

7.2.3 Extract the remaining cadmium sulfide from the third, fourth and fifth impingers using the acidified iodine solution. Immediately after pouring the acidified iodine into an impinger, stopper it and shake for a few moments, then transfer the liquid to the iodine flask. Do not transfer any rinse portion from one impinger to another; transfer it directly to the iodine flask. Once acidified iodine solution has been poured into any glassware containing cadmium sulfide, the container must be tightly stoppered at all times except when adding more solution, and this must be done as quickly and carefully as possible. After adding any acidified iodine solution to the iodine flask, allow a few minutes for absorption of the H_2S before adding any further rinses. Repeat the iodine extraction until all cadmium sulfide is removed from the impingers. Extract that part of the connecting glassware that contains visible cadmium sulfide.

7.2.4 Quantitatively rinse all of the iodine from the impingers, connectors, and the beaker into the iodine flask using deionized distilled water. Stopper the flask and shake well. Allow to stand about 30 min in the dark for absorption of the H_2S into the iodine, then complete the titration analysis as in Section 7.3.

[NOTE: CAUTION! Iodine evaporates from acidified iodine solutions, and samples to which acidified iodine has been added may not be stored, but must be analyzed in the time schedule stated above.]

7.2.5 Prepare a blank by adding 30 ml of cadmium acetate absorbing solution to an iodine flask. Pipette exactly 50 ml of 0.01 iodine solution into a 250 ml beaker. Add 50 ml of 10% HCl. Follow the same impinger extracting and quantitative rinsing procedure carried out in sample analysis. Stopper the flask, shake well and titrate with the samples.

7.3 Analysis

[NOTE: Titration analyses should be conducted at the sample clean-up area in order to prevent loss of iodine from the sample. Titration should never be made in direct sunlight.]

7.3.1 Using 0.01 N sodium thiosulfate solution, rapidly titrate samples in iodine flasks using gentle mixing, until solution is light yellow. Add 4 ml of starch indicator solution and continue titrating slowly until blue color just disappears. Record V_t, the volume of sodium thiosulfate solution used (ml).

7.3.2 Titrate the blanks in the same manner as the samples.

8.0 Calibration and Standards

8.1 Standardize the 0.01 N iodine solution daily as follows: pipette 25 ml of the iodine solution into a 125 ml Erlenmeyer flask. Titrate rapidly with standard 0.01 N thiosulfate solution until the solution is light yellow, using gentle mixing. Add four drops of starch indicator solution and continue titrating slowly until the blue color just disappears. Record V_t, the volume of thiosulfate solution used. Repeat until replicate values agree within 0.05 ml. Average the replicate titration values which agree within 0.05 ml and calculate the exact normality of the iodine solution using Equation A-1. Repeat the standardization daily.

8.2 Standardize the 0.1 N thiosulfate solution as follows: Crystallize potassium dichromate ($K_2Cr_2O_7$) from distilled water and oven-dry at 180 to 200°C (300 to 390°F). Weigh to the nearest milligram 2 g of potassium dichromate into a 500 ml volumetric flask, dissolve in deionized, distilled water and dilute to exactly 500 ml. In a 500 ml iodine flask, dissolve approximately 3 g of potassium iodide (KI) in 45 ml of deionized, distilled water, then add 10 ml of 10% hydrochloric acid solution. Pipette 50 ml of the dichromate solution into this mixture. Gently swirl the solution once and allow it to stand in the dark for 5 min. Dilute the solution with 100 to 200 ml of deionized distilled water, washing down the sides of the flask with part of the water. Swirl the solution slowly and titrate with the thiosulfate solution until the solution is light yellow. Add 4 ml of starch indicator solution and continue titrating slowly until the bright blue color has disappeared and only the pale green color of the chromic ion remains. Record V_t, the volume of thiosulfate solution used. Replicate titrations should agree within 0.05 ml. Average the replicate titrations and calculate the exact normality of the sodium thiosulfate solution using Equation A-2.

[NOTE: Sodium thiosulfate solutions are affected by bacterial action, by air oxidation and by decomposition with the precipitation of sulfur. When properly prepared and handled, they may last for several weeks. Avoid exposure to light. Check solution for cloudiness and presence of sediment, and restandardize frequently.]

9.0 Calculations

Carry out calculations, retaining at least one extra decimal figure beyond that of the acquired data. Round off figures after final calculation. (Calculations are performed in accordance with the original Method 11, Federal Register, March 8, 1974.)

APPENDIX C

RUGGEDNESS TEST DATA

The titration results were compared to the level calculated from the respective flow rates of pure H_2S and natural gas. This calculated value varies by 2 to 5% from one run to another and may have caused false changes for some variables.

When the $CdSO_4$ concentration was 0.24 M, 5 ml of HCl were added and the impingers were extracted, a very large effect on the blank was found. Unfortunately, these three variables were always in their worst levels at the same time during the test, and the possible interactions are not separable from the ruggedness test data.

Further tests were then made to determine the individual contributions of these three variables. $CdSO_4$ concentration had no effect when it was changed while holding HCl addition at 5 ml and extracting the impinger. Changing the HCl addition alone made a change of about 0.30 ml of titrant. Changing the extraction procedure made a shift of over 0.5 ml in the blank values. Thus, it was the unfortunate coincidence of the 0.24 M $CdSO_4$ concentration above coinciding with the worst case of the other two that led to the large significance of the $CdSO_4$ concentration in the ruggedness test.

TABLE C-1

TEST DESIGN MATRIX[a/]

Variable	Run Number 1	2	3	4	5	6	7	8	9	10	11	12	13	14	15	16
A. Temperature (°C)	25	0	0	25	25	0	25	0	0	0	0	0	25	25	25	25
B. Tip Clearance (mm)	5-7	2-4	5-7	2-4	2-4	2-4	5-7	5-7	5-7	2-4	2-4	5-7	2-4	5-7	5-7	2-4
C. Tip Diameter	1.02-1.04	1.00-1.02	1.00-1.02	1.02-1.04	1.00-1.02	1.02-1.04	1.00-1.02	1.02-1.04	1.02-1.04	1.00-1.02	1.02-1.04	1.00-1.02	1.00-1.02	1.02-1.04	1.00-1.02	1.02-1.04
D. Sol. Volume (ml)	10	10	20	20	10	20	20	10	20	20	10	10	20	20	10	10
E. pH	3.5	2.5	3.5	2.5	3.5	3.5	2.5	2.5	3.5	3.5	2.5	2.5	2.5	2.5	3.5	3.5
F. Flow Rate (ℓ/min)	0.8	0.8	0.8	0.8	1.5	1.5	1.5	1.5	0.8	1.5	0.8	1.5	0.8	1.5	0.8	1.5
G. Purge Time (min)	20	10	10	20	20	10	20	10	20	20	20	20	10	10	10	10
H. Run Time (min)	45	15	45	15	45	45	15	15	15	15	45	45	45	45	15	15
I. Sol. Age	day	day	day	day	day	day	day	day	week	week	week	week	week	week	week	week
J. $CdSO_4$ Conc. (M)	0.08	0.08	0.08	0.08	0.24	0.24	0.24	0.24	0.24	0.08	0.24	0.08	0.24	0.08	0.24	0.08
K. Shaking (sec)	60	2	2	60	2	60	2	60	2	60	2	60	60	2	60	2
L. Antifoam (drops/ℓ)	0	0	10	10	10	0	0	10	0	10	10	0	0	10	10	0
M. HCl (ml)	5	5	50	50	50	5	5	50	50	5	5	50	50	5	5	50
N. Extraction	No	No	Yes	Yes	No	Yes	Yes	No	No	No	Yes	Yes	No	No	Yes	Yes
O. Dummy	-	-	-	-	-	-	-	-	-	-	-	-	-	-	-	-

a/ Arranged in order of measurement. See Table 4 of main text for explanation of variables.

TABLE C-2

RESULTS OF RUGGEDNESS TEST - BLANKS AND H_2S MEASURED

Run No.	Blanks (ml of I_2)			Theo. Blks. (ml of I_2)	Results (mg/dscm)		Theo. Results (mg/dscm)
1	45.74	45.74	45.82	45.84	171	175	329
2	46.82	46.75	46.76	46.58	205	177	318
3	44.98	45.07	44.66	46.48	266	272	320
4	45.79	45.62	45.65	46.03	240	252	324
5	46.36	46.39	46.34	46.24	264	256	325
6	46.15	46.25	46.24	46.24	195	194	322
7	46.31	46.26	46.29	46.48	267	270	329
8	45.23	44.85	44.91	46.03	280	282	332
9	46.48	46.30	46.28	46.03	255	305	324
10	44.81	44.44	44.54	46.16	261	268	321
11	45.70	45.66	45.70	45.84	194	196	326
12	46.33	46.29	46.24	46.24	230	246	322
13	46.09	46.17	46.10	46.16	244	255	318
14	44.92	44.67	44.94	46.48	279	285	331
15	46.11	46.04	46.14	45.84	281	286	328
16	46.47	46.43	46.61	46.58	168	187	306

APPENDIX D

TENTATIVE METHOD FOR THE DETERMINATION OF HYDROGEN SULFIDE EMISSIONS FROM STATIONARY SOURCES[a]

pH 3.0 CADMIUM SULFATE PROCEDURE

a/ A tentative method is one which has been carefully drafted from available experimental information, reviewed editorially within the Methods Standardization and Performance Evaluation Branch, QAEML, and has undergone extensive laboratory evaluation. The method is still under investigation and, therefore, is subject to revision.

1.0 Principle and Applicability

1.1 Principle - Hydrogen sulfide (H_2S) is collected from a source in a series of midget impingers and absorbed in buffered cadmium sulfate solution to form cadmium sulfide (CdS). The latter compound is then measured iodometrically. An impinger containing hydrogen peroxide is included to remove SO_2 as an interfering species.

1.2 Applicability. This method is applicable for the determination of hydrogen sulfide emissions from stationary sources only when specified by the test procedures for determining compliance with the new source performance standards.

2.0 Range and Sensitivity. The limit of detection is approximately 8 mg/m^3 (6 ppm). The maximum of the range is 740 mg/m^3 (520 ppm). The lower limit of the range may be extended by collecting a larger volume of gas samples; the upper limit by increasing the concentration of the iodine solution.

3.0 Interferences. Any compound that reduces iodine or oxidizes iodide ion will interfere in this procedure, provided it is collected in the cadmium sulfate impingers. Sulfur dioxide in concentrations of up to 0.1 mole percent is eliminated by the peroxide solution. Mercaptans coprecipitate with hydrogen sulfide. Methyl and/or ethyl mercaptan produce a maximum positive error of 25%. In the absence of H_2S only traces of mercaptan are collected. A mercaptan concentration equal to that of the H_2S present yields results that are approximately 5% high. Carbon oxysulfide of 20% does not interfere. Certain carbonyl-containing compounds react with iodine and produce recurring endpoints. However, acetaldehyde and acetone at concentrations of 1 and 3%, respectively, do not interfere.

Entrained hydrogen peroxide produces a negative interference equivalent to 100% of that of an equimolar quantity of hydrogen sulfide. Avoid the ejection of hydrogen peroxide into the cadmium sulfate impingers.

4.0 Precision and Accuracy. Replicate analyses should not deviate by more than 5% relative standard deviation. The collection efficiency of hydrogen sulfide measurements has been established at 96 $\pm$ 2% of the absolute value based on known standards.

5.0 Apparatus.

5.1 Sampling Train.

5.1.1 Sampling line - 6 to 7 mm (1/4 in.) Teflon[a/] tubing to connect sampling train to sampling valve, with provisions for heating to prevent condensation. A pressure reduction valve prior to the Teflon sampling line may be required depending on sampling stream pressure.

5.1.2 Impingers - Five midget impingers, each with 30 ml capacity. The internal diameter of the impinger tip must be 1.00 mm ± 0.5 mm. The impinger tip must be 4 to 6 mm from the bottom of the impinger.

5.1.3 Ice bath container - To maintain absorbing solution at a temperature.

5.1.4 Silica gel drying tube - To protect pump and dry gas meter.

5.1.5 Needle valve or equivalent. Stainless steel or other corrosion resistant material to adjust gas flow rate.

5.1.6 Pump - Leak free, diaphragm-type, or equivalent, to transport gas. (Not required if sampling stream is under positive pressure.)

5.1.7 Dry gas meter - Sufficiently accurate to measure sample volume to within 1% and calibrated over the range of flow rates used in sampling.

5.1.8 Flow meter - Rotameter or equivalent, to measure a 0.5 to 2.0 liters/min (1 to 4 CFH) flow rate.

5.1.9 Graduated cylinder - 25 ml size.

5.1.10 Barometer - To measure atmospheric pressure to within ± 2.5 mm (0.1 in.) Hg.

5.2 Sample Recovery.

5.2.1 Sample container - Iodine flask, glass-stoppered; 500 ml size.

5.2.2 Pipette - 50 ml volumetric type.

---

a/ Trade name.

5.2.3 Graduated cylinders - One each 25 and 250 ml.

5.2.4 Flasks - 125 ml, Erlenmeyer.

5.2.5 Wash bottle.

5.2.6 Volumetric flasks - Three 1,000 ml.

5.3 Analysis.

5.3.1 Flask - 500 ml glass-stoppered iodine flask.

5.3.2 Burette - 50 ml.

5.3.3 Flask - 125 ml, Erlenmeyer.

5.3.4 Pipettes, volumetric - One each 15 and 25 ml; two each 50 and 100 ml.

5.3.5 Volumetric flasks - One 1,000 ml; two 500 ml.

5.3.6 Graduated cylinders - One each 10 and 100 ml.

6.0 Reagents. Unless otherwise indicated, it is intended that all reagents conform to the specifications established by the Committee on Analytical Reagents of the American Chemical Society, where such specifications are available. Otherwise, use best available grade.

6.1 Sampling.

6.1.1 Cadmium sulfate absorbing solution - Dissolve 41.0 g of $3CdSO_4 \cdot 8H_2O$ and 15.0 ml of 0.1 M sulfuric acid in 1 liter of deionized distilled water. pH should be 3.0 $\pm$ 0.1. Add 10 drops of Antifoam B.[a]

6.1.2 Hydrogen peroxide, 3% - Dilute 30% hydrogen peroxide to 3% as needed. Prepare fresh daily.

6.1.3 Water - Deionized, distilled, to conform to ASTM specifications D1193-72, Type 3.

6.2 Sample recovery.

---

a/ Trade name.

6.2.1 Hydrochloric acid solution (HCl), 3 M - Add 240 ml of concentrated HCl (specific gravity 1.19) to 500 ml of deionized, distilled water in a 1 liter volumetric flask. Dilute to 1 liter with deionized water. Mix thoroughly.

6.2.2 Iodine solution, 0.1 N - Dissolve 24 g of potassium iodide (KI) in 30 ml of deionized, distilled water. Add 12.7 g of resublimed iodine (I_2) to the potassium iodide solution. Shake the mixture until the iodine is completely dissolved. If possible, let stand overnight in the dark. Slowly dilute the solution to 1 liter with deionized, distilled water, with swirling. Filter the solution if cloudy and store in a brown-glass reagent bottle.

6.2.3 Standard iodine solution, 0.01 N - Dilute 100 ml of the 0.1 N iodine solution to 1 liter with deionized, distilled water. Standardize daily as in Section 8.1 below.

6.3 Analysis.

6.3.1 Sodium thiosulfate solution, standard 0.1 N - Dissolve 24.8 g of sodium thiosulfate ($Na_2S_2O_3 \cdot 5H_2O$) in 1 liter of deionized, distilled water and add 0.01 g of anhydrous sodium carbonate (Na_2CO_3) and 0.4 ml of chloroform ($CHCl_3$) to stabilize. Mix thoroughly by shaking or by aerating with nitrogen for approximately 15 min, and store in a glass-stoppered reagent bottle. Standardize as in Section 8.2 below.

6.3.2 Sodium thiosulfate solution, standard 0.01 N - Pipette 50 ml of the standard 0.1 N thiosulfate solution into a volumetric flask and dilute to 500 ml with distilled water.

6.3.3 Starch indicator solution - Suspend 10 g of soluble starch in 100 ml of deionized, distilled water and add 15 g of potassium hydroxide (KOH) pellets. Stir until dissolved, dilute with 900 ml of deionized distilled water and let stand for 1 hr. Neutralize the alkali with concentrated hydrochloric acid, using an indicator paper similar to Alkacid[a/] test ribbon, then add 2 ml of glacial acetic acid as a preservative.

(Note 1: Test starch indicator solution for decomposition by titrating 4 ml of starch solution in 200 ml of distilled water containing 1 g potassium iodide with 0.01 N iodine solution. If more than 4 drops of the 0.01 N iodine solution are required to obtain the blue color, a fresh solution must be prepared.)

---

a/ Trade name.

7.0 Procedure.

7.1 Sampling.

7.1.1 Assemble the sampling train as shown in Figure D-1, connecting the five midget impingers in series. Place 15 ml of 3% hydrogen peroxide solution in the first impinger. Leave the second impinger empty. Place 15 ml of the cadmium sulfate absorbing solution in the third, fourth, and fifth impingers. Place impinger assembly in ice bath container and add crushed ice around the impingers. Add more ice during the run, if needed.

7.1.2 Purge the connecting line between the sampling valve and the first impinger. Connect the sample line to the train. Record the initial reading of the dry gas meter.

7.1.3 Open the flow control valve and adjust the sampling rate to approximately 1 liter/min. Record the meter temperature.

7.1.4 Sample for 10 min. At the end of the sampling time, close the flow control valve and record the final volume and temperature readings.

7.1.5 Disconnect the impinger train from the sampling line. Purge the train with clean ambient air for 15 min to ensure that all H_2S is removed from the hydrogen peroxide. (Clean ambient air can be provided by passing air through a charcoal filter.) Cap the open ends and remove to a clean area away from sources of heat for sample cleanup. The area should be well lighted, but not exposed to direct sunlight.

7.2 Sample recovery.

7.2.1 Discard the contents of the hydrogen peroxide impinger. Carefully rinse the contents of the third, fourth, and fifth impingers into a 500 ml iodine flask.

(NOTE: The impingers normally have only a thin film of cadmium sulfide remaining after a water rinse. If significant quantities of yellow cadmium sulfide remain in the impingers, the alternate recovery procedure must be used.)

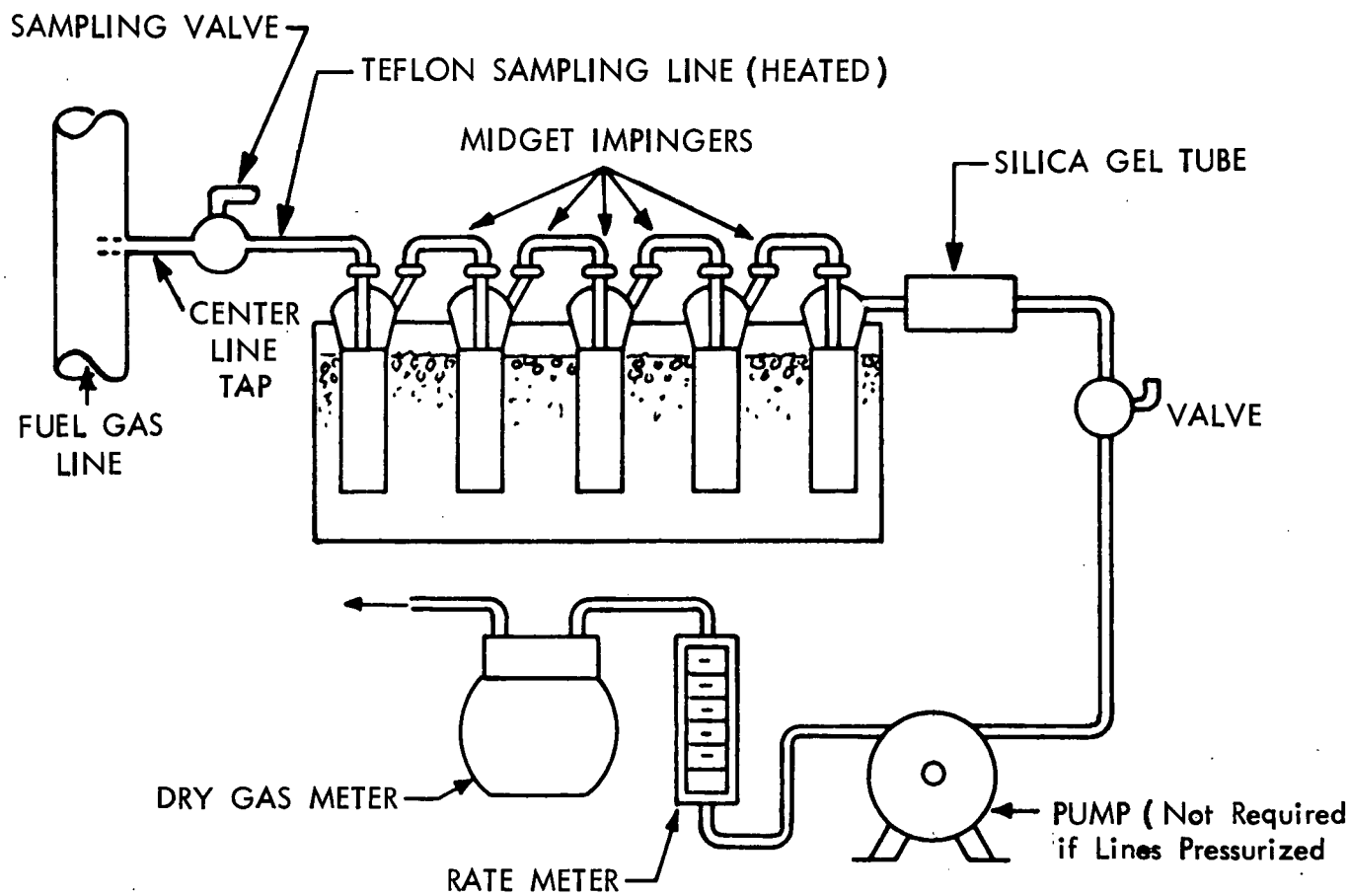

Figure D-1 - H_2S Sampling Train

7.2.2 Pipette exactly 50 ml of 0.01 N iodine solution into a 125 ml Erlenmeyer flask. Add 10 ml of 3 M HCl to the solution. Quantitately rinse the acidified iodine into the iodine flask. Stopper the flask immediately and shake briefly.

7.2.2 (Alternate) Extract the remaining cadmium sulfide from the third, fourth, and fifth impingers using the acidified iodine solution. Immediately after pouring the acidified iodine into an impinger, stopper it and shake for a few moments, then transfer the liquid to the iodine flask. Do not transfer any rinse portion from one impinger to another; transfer it directly to the iodine flask. Once acidified iodine solution has been poured into any glassware containing cadmium sulfide, the container must be tightly stoppered at all times except when adding more solution, and this must be done as quickly and carefully as possible. After adding any acidified iodine solution to the iodine flask, allow a few minutes for absorption of the H_2S before adding any further rinses. Repeat the iodine extraction until add cadmium sulfide is removed from the impingers. Extract that part of the connecting glassware that contains visible cadmium sulfide.

Quantitatively rinse all of the iodine from the impingers, connectors, and the beaker into the iodine flask using deionized distilled water. Stopper the flask and shake well.

7.2.3 Allow to stand about 30 min in the dark for absorption of the H_2S into the iodine, then complete the titration analysis as in Section 7.3

(NOTE: CAUTION! Iodine evaporates from acidified iodine solutions and samples to which acidified iodine has been added may not be stored, but must be analyzed in the time schedule stated above.)

7.2.4 Prepare a blank by adding 45 ml of cadmium sulfate absorbing solution to an iodine flask. Pipette exactly 50 ml of 0.01 iodine solution into a 125 ml Erlenmeyer flask. Add 10 ml of 3 M HCl. Follow the same impinger extracting and quantitative rinsing procedure carried out in sample analysis. Stopper the flask, shake well and titrate with the samples.

(NOTE: If the alternate extraction procedure is used, the blank must be handled following the alternate procedure.)

7.3 Analysis.

(NOTE: Titration analyses should be conducted at the sample cleanup area in order to prevent loss of iodine from the sample. Titration should never be made in direct sunlight.)

7.3.1 Using 0.01 N sodium thiosulfate solution, rapidly titrate samples in iodine flasks using gentle mixing, until solution is light yellow. Add 4 ml of starch indicator solution and continue titrating slowly until blue color just disappears. Record V_t, the volume of sodium thiosulfate solution used (ml).

7.3.2 Titrate the blanks in the same manner as the samples.

8.0 Calibration and Standards

8.1 Standardize the 0.01 N iodine solution daily as follows: Pipette 25 ml of the iodine solution into a 125 ml Erlenmeyer flask. Add 2 ml of 3 M HCl. Titrate rapidly with standard 0.01 N thiosulfate solution until the solution is light yellow, using gentle mixing. Add four drops of starch indicator solution and continue titrating slowly until the blue color just disappears. Record V_t, the volume of thiosulfate solution used. Repeat until replicate values agree within 0.05 ml. Average the replicate titration values which agree within 0.05 ml and calculate the exact normality of the iodine solution using equation D-1. Repeat the standardization daily.

8.2 Standardize the 0.1 N thiosulfate solution as follows: Oven dry potassium dichromate ($K_2Cr_2O_7$) at 180 to 200°C. Weigh to the nearest milligram to grams of potassium dichromate into a 500 ml volumetric flask, dissolve in deionized, distilled water and dilute to exactly 500 ml. In a 500 ml iodine flask, dissolve approximately 3 g of potassium iodide (KI) in 45 ml of deionized, distilled water, then add 10 ml of 3 M hydrochloric acid solution. Pipette 50 ml of the dichromate solution into this mixture. Gently swirl the solution once and allow it to stand in the dark for 5 min. Dilute the solution with 100 to 200 ml of deionized distilled water, washing down the sides of the flask with part of the water.

9.0 Calculations

9.1 Normality of the Standard Iodine Solution.

$$N_I = \frac{N_T V_T}{V_I} \qquad \text{(D-1)}$$

where:

N_I = normality of iodine, g-eq/liter;
V_I = volume of iodine used, ml;
N_T = normality of sodium thiosulfate, g-eq/liter; and
V_T = volume of sodium thiosulfate used, ml.

9.2 Normality of the Standard Thiosulfate Solution.

$$N_T = 2.04 \frac{W}{V_T} \qquad \text{(D-2)}$$

where:

W = weight of $K_2Cr_2O_7$ used, g;
V_T = volume of $Na_2S_2O_3$ used, ml;
N_T = normality of standard thiosulfate solution, g-eq/liter; and
2.04 = conversion factor.

$$= \frac{(6 \text{ eq } I_2/\text{mole } K_2Cr_2O_7)\ (1{,}000 \text{ ml/liter})}{(294.2 \text{ g } K_2Cr_2O_7/\text{mole})\ (10 \text{ aliquot factor})}$$

9.3 Dry Gas Volume - Correct the sample volume measured by the dry gas meter to standard conditions (21°C) and 760 mm Hg.

$$V_{m_{std}} = V_m \left(\frac{T_{std}}{T_m}\right) \left(\frac{P_{bar}}{P_{std}}\right) \qquad \text{(D-3)}$$

where:

$V_{m_{std}}$ = volume at standard conditions of gas sample through the dry gas meter, standard liters;
V_m = volume of gas sample through the dry gas meter (meter conditions), liters;
T_{std} = absolute temperature at standard conditions, 294°K;
T_m = average dry gas meter temperature, °K;
P_{bar} = barometric pressure at the orifice meter, mm Hg; and
P_{std} = absolute pressure at standard conditions, 760 mm Hg.

9.4 Concentration of H_2S - Calculate the concentration of H_2S in the gas stream at standard conditions using equation:

$$C_{H_2S} = \frac{K[(V_I N_I - V_T N_T)\ \text{sample} - (V_I N_I - V_T N_T)\ \text{blank}]}{V_{m_{std}}} \qquad \text{(D-4)}$$

where (metric units):

C_{H_2S} = concentration of H_2S at standard conditions, mg/dscm;
K = conversion factor = 17.0×10^3

$$= \frac{(34.07\ \text{g/mole}\ H_2S)\ (1{,}000\ \text{liters/m}^3)\ (1{,}000\ \text{mg/g})}{(1{,}000\ \text{ml/liter})\ (2H_2S\ \text{eq/mole})}$$

V_I = volume of standard iodine solution, ml;
N_I = normality of standard iodine solution, g-eq/liter;
V_T = volume of standard sodium thiosulfate solution, ml;
N_T = normality of standard sodium thiosulfate solution, g-eq/liter; and
$V_{m_{std}}$ = dry gas volume at standard conditions, liters

10.0 Stability. The absorbing solution is stable for at least 1 month. Sample recovery and analysis should begin within 1 hr of sampling to minimize oxidation of the acidified cadmium sulfide. Once iodine has been added to the sample the remainder of the analysis procedure must be completed according to Sections 7.2.2, 7.2.3, and 7.3.

APPENDIX E

TENTATIVE METHOD FOR THE DETERMINATION OF HYDROGEN SULFIDE EMISSIONS FROM STATIONARY SOURCES[a]

(FINAL VERSION USED FOR COLLABORATIVE TEST)

a/ A tentative method is one which has been carefully drafted from available experimental information, review editorially within the Quality Assurance Branch, EMSL, and has undergone extensive laboratory evaluation. The method is still under investigation and, therefore, is subject to revision.

1.0 Principle and Applicability

1.1 Principle

Hydrogen sulfide (H_2S) is collected from a source in a series of midget impingers and absorbed in pH 3.0 cadmium sulfate solution to form cadmium sulfide (CdS). The latter compound is then measured iodometrically. An impinger containing hydrogen peroxide is included to remove SO_2 as an interfering species.

1.2 Applicability

This method is applicable for the determination of hydrogen sulfide emissions from stationary sources only when specified by the test procedures for determining compliance with the new source performance standards.

2.0 Range and Sensitivity

The limit of detection is approximately 8 mg/m^3 (6 ppm). The maximum of the range is 740 mg/m^3 (520 ppm).

3.0 Interferences

Any compound that reduces iodine or oxidizes iodide ion will interfere in this procedure, provided it is collected in the cadmium-sulfate impingers. Sulfur dioxide in concentrations of up to 0.1 mole percent is eliminated by the peroxide solution. Mercaptans coprecipitate with hydrogen sulfide. In the absence of H_2S, only traces of mercaptan are collected. A mercaptan concentration equal to that of the H_2S present yields results that are approximately 5% high. Carbon oxysulfide of 20% does not interfere. Certain carbonyl-containing compounds react with iodine and produce recurring endpoints. However, acetaldehyde and acetone at concentrations of 1 and 3%, respectively, do not interfere.

Entrained hydrogen peroxide produces a negative interference equivalent to 100% of that of an equimolar quantity of hydrogen sulfide. Avoid the ejection of hydrogen peroxide into the cadmium sulfate impingers.

4.0 Precision and Accuracy

Replicate analyses should not deviate by more than 5% relative standard deviation. The collection efficiency of hydrogen sulfide measurements has been established at 96 $\pm$ 2% of the absolute value based on known standards.

5.0 Apparatus

5.1 Sampling Train

5.1.1 Sampling line - Six to 7 mm (1/4 in.) Teflon[a/] tubing to connect sampling train to sampling valve. Depending on sampling stream pressure, a pressure-reduction regulator may be required just prior to the Teflon sampling line.

If significant amounts of water or amine are present in the sample stream, a corrosion-resistant cold trap should be used immediately after the sample tap. The trap should not be operated below 0°C to avoid condensation of C_3 or C_4 hydrocarbons.

5.1.2 Impingers - Five midget impingers, each with 30 ml capacity. The internal diameter of the impinger tip must be 1.00 mm $\pm$ 0.05 mm. The impinger tip must be positioned 4 to 6 mm from the bottom of the impinger.

5.1.3 Glass or Teflon connecting tubing for the impingers.

5.1.4 Ice bath container - To maintain absorbing solution at a low temperature.

5.1.5 Silica gel drying tube - To protect pump and dry gas meter.

5.1.6 Sampling valve - Needle valve or equivalent to adjust gas flow rate. Stainless steel or other corrosion-resistant material.

5.1.7 Dry gas meter - Sufficiently accurate to measure sample volume to within 1% and calibrated with a wet test meter over the range of flow rates used in sampling. Gas volume for one dial revolution must not be more than 10 liters. The gas meter should have a gas petcock or equivalent on the outlet connector which can be closed during the leak test.

5.1.8 Flow meter - Rotameter or equivalent, to measure a 0.5 to 2.0 liters/min (1 to 4 CFH) flow rate.

5.1.9 Graduated cylinder - 25 ml size.

5.1.10 Barometer - To measure atmospheric pressure to within $\pm$ 2.5 mm (0.1 in.) Hg.

5.1.11 U-Tube manometer - 0-30 cm. water column. For leak check procedure.

---

a/ Trade name.

5.1.12 Rubber squeeze bulb - To pressurize train for leak check.

5.1.13 Tee, pinchclamp, and connecting tubing - For leak check.

5.1.14 Vacuum pump - Required for air purge.

5.1.15 Needle valve or orifice - To set air purge flow to 1 liter/min.

5.1.16 Tube packed with activated carbon - To filter air during purge.

5.1.17 Volumetric flask - One 1,000 ml.

5.1.18 Volumetric pipette - One 15 ml.

5.2 Sample Recovery

5.2.1 Sample container - Iodine flask, glass-stoppered; 500 ml size.

5.2.2 Pipette - 50 ml volumetric type.

5.2.3 Graduated cylinders - One each 25 and 250 ml.

5.2.4 Flasks - 125 ml, Erlenmeyer.

5.2.5 Wash bottle.

5.2.6 Volumetric flasks - Three 1,000 ml.

5.3 Analysis

5.3.1 Flask - 500 ml glass-stoppered iodine flask.

5.3.2 Burette - 50 ml.

5.3.3 Flask - 125 ml. Erlenmeyer.

5.3.4 Pipettes, volumetric - One 25 ml; two each 50 and 100 ml.

5.3.5 Volumetric flasks - One 1,000 ml; two 500 ml.

5.3.6 Graduated cylinders - One each 10 and 100 ml.

6.0 Reagents

Unless otherwise indicated, it is intended that all reagents conform to the specifications established by the Committee on Analytical Reagents of the American Chemical Society, where such specifications are available. Otherwise, use best available grade.

6.1 Sampling

6.1.1 Cadmium sulfate absorbing solution - Dissolve 41.0 g of $3CdSO_4 \cdot 8\ H_2O$ and 15.0 ml of 0.1 M sulfuric acid in a 1-liter volumetric flask that contains approximately 3/4 liter of deionized distilled water. Dilute to volume with deionized water. Mix thoroughly. pH should be 3.0 ± 0.1. Add 10 drops of Dow-Corning Antifoam B.[a/] Shake well before use. If Antifoam B is not used, the alternate acidified iodine extraction procedure must be used.

6.1.2 Hydrogen peroxide, 3% - Dilute 30% hydrogen peroxide to 3% as needed. Prepare fresh daily.

6.1.3 Water - Deionized, distilled, to conform to ASTM specifications D1193-72, Type 3.

6.2 Sample Recovery

6.2.1 Hydrochloric acid solution (HCl), 3 M - Add 240 ml of concentrated HCl (specific gravity 1.19) to 500 ml of deionized, distilled water in a 1-liter volumetric flask. Dilute to 1 liter with deionized water. Mix thoroughly.

6.2.2 Iodine solution, 0.1 N - Dissolve 24 g of potassium iodide (KI) in 30 ml of deionized, distilled water. Add 12.7 g of resublimed iodine (I_2) to the potassium iodide solution. Shake the mixture until the iodine is completely dissolved. If possible, let the solution stand overnight in the dark. Slowly dilute the solution to 1 liter with deionized, distilled water, with swirling. Filter the solution if it is cloudy. Store solution in a brown-glass reagent bottle.

6.2.3 Standard iodine solution, 0.01 N - Pipette 100.0 ml of the 0.1 N iodine solution into 1-liter volumetric flask and dilute to volume with dionized, distilled water. Standardize daily as in Section 8.1. This solution must be protected from light. Reagent bottles and flasks must be kept tightly stoppered.

---

a/ Trade name.

6.3 Analysis

6.3.1 Sodium thiosulfate solution, standard 0.1 N - Dissolve 24.8 g of sodium thiosulfate pentahydrate ($Na_2S_2O_3 \cdot 5H_2O$) or 15.8 g of anhydrous sodium thiosulfate ($Na_2S_2O_3$), in 1 liter of deionized, distilled water and add 0.01 g of anhydrous sodium carbonate (Na_2CO_3) and 0.4 ml of chloroform ($CHCl_3$) to stabilize. Mix thoroughly by shaking or by aerating with nitrogen for approximately 15 min and store in a glass-stoppered, reagent bottle. Standardize as in Section 8.2 below.

6.3.2 Sodium thiosulfate solution, standard 0.01 N - Pipette 50.0 ml of the standard 0.1 N thiosulfate solution into a volumetric flask and dilute to 500 ml with distilled water.

6.3.3 Starch indicator solution - Suspend 10 g of soluble starch in 100 ml of deionized, distilled water and add 15 g of potassium hydroxide (KOH) pellets. Stir until dissolved, dilute with 900 ml of deionized distilled water and let stand for 1 hour. Neutralize the alkali with concentrated hydrochloric acid, using an indicator paper similar to Alkacid[a/] test ribbon, then add 2 ml of glacial acetic acid as a preservative.
(NOTE: Test starch indicator solution for decomposition by titrating with 0.01 N iodine solution 4 ml of starch solution in 200 ml of distilled water that contains 1-g potassium iodide. If more than 4 drops of the 0.01 N iodine solution are required to obtain the blue color, a fresh solution must be prepared.)

7.0 Procedure

7.1 Sampling

7.1.1 Assemble the sampling train as shown in Figure E-1, connecting the five midget impingers in series. Place 15 ml of 3% hydrogen peroxide solution in the first impinger. Leave the second impinger empty. Place 15 ml of the cadmium sulfate absorbing solution in the third, fourth, and fifth impingers. Place the impinger assembly in an ice bath container and place crushed ice around the impingers. Add more ice during the run, if needed.

7.1.2 Connect the rubber bulb and manometer to first impinger, as shown in Figure E-1. Close the petcock on the dry gas meter outlet. Pressurize the train to 30-cm. water pressure with the bulb and close off tubing connected to rubber bulb. Train must hold a 30-cm. water pressure with not more than a 1 cm. drop in pressure in a 1-min interval. Stopcock grease is acceptable for sealing ground glass joints.

a/ Trade name.

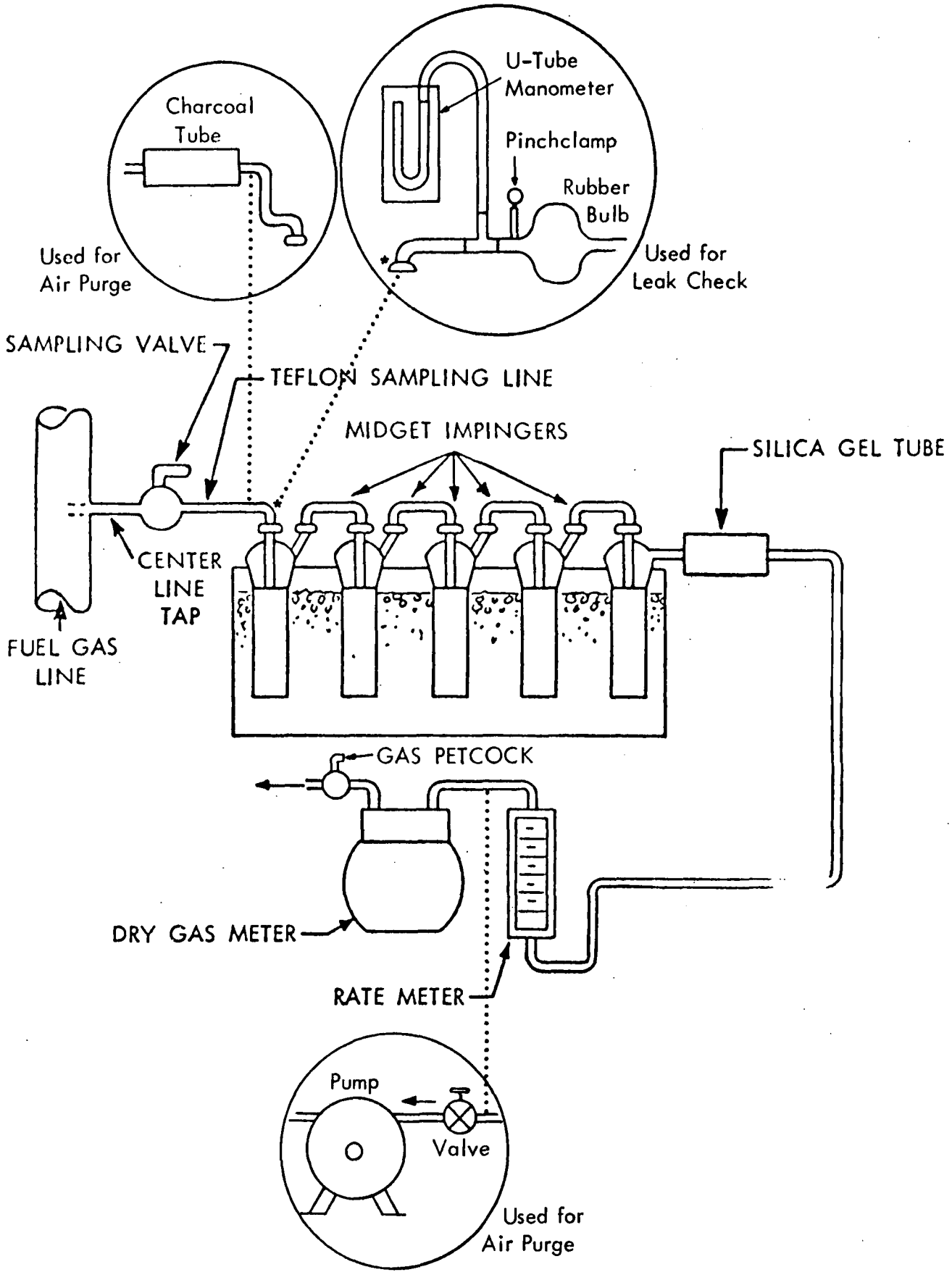

Figure E-1 - H_2S Sampling Train

7.1.3 Purge the connecting line between the sampling valve and the first impinger. Close valve and connect the sample line to the train. Open the petcock on the dry gas meter outlet. Record the initial reading of the dry gas meter.

7.1.4 Open the sampling valve and then adjust the valve to obtain a rate of approximately 1 liter/min. Maintain a constant flow rate during the test. Record the meter temperature.

7.1.5 Sample for at least 10 min. At the end of the sampling time, close the sampling valve and record the final volume and temperature readings.

7.1.6 Disconnect the impinger train from the sampling line. Connect the charcoal tube and the pump, as shown in Figure E-1. Purge the train with clean ambient air for 15 min to ensure that all H_2S is removed from the hydrogen peroxide. For sample recovery, cap the open ends and remove to a clean area that is away from sources of heat. The area should be well lighted, but not exposed to direct sunlight.

7.2 Sample Recovery

7.2.1 Discard the contents of the hydrogen peroxide impinger. Carefully rinse the contents of the third, fourth, and fifth impingers into a 500 ml iodine flask.
(NOTE: The impingers normally have only a thin film of cadmium sulfide remaining after a water rinse. If Antifoam B was not used or if significant quantities of yellow cadmium sulfide remain in the impingers, the alternate recovery procedure must be used.)

7.2.2 Pipette exactly 50 ml of 0.01 N iodine solution into a 125-ml Erlenmeyer flask. Add 10 ml of 3 M HCl to the solution. Quantitately rinse the acidified iodine into the iodine flask. Stopper the flask immediately and shake briefly.

7.2.2 (Alternate) Extract the remaining cadmium sulfide from the third, fourth, and fifth impingers using the acidified iodine solution. Immediately after pouring the acidified iodine into an impinger, stopper it and shake for a few moments, then transfer the liquid to the iodine flask. Do not transfer any rinse portion from one impinger to another; transfer it directly to the iodine flask. Once the acidified iodine solution has been poured into any glassware containing cadmium sulfide, the container must be tightly stoppered at all times except when adding more solution, and this must be done as quickly and carefully as possible. After adding any acidified iodine solution to the iodine flask, allow a few minutes for absorption of the H_2S before adding any further rinses. Repeat the iodine

extraction until all cadmium sulfide is removed from the impingers. Extract that part of the connecting glassware that contains visible cadmium sulfide.

Quantitatively rinse all of the iodine from the impingers, connectors, and the beaker into the iodine flask using deionized, distilled water. Stopper the flask and shake briefly.

7.2.3 Allow to stand about 30 min in the dark for absorption of the H_2S into the iodine, then complete the titration analysis as in Section 7.3.

(NOTE: CAUTION! Iodine evaporates from acidified iodine solutions. Samples to which acidified iodine have been added may not be stored, but must be analyzed in the time schedule stated above in 7.2.3.)

7.2.4 Prepare a blank by adding 45 ml of cadmium sulfate absorbing solution to an iodine flask. Pipette exactly 50 ml of 0.01 iodine solution into a 125-ml Erlenmeyer flask. Add 10 ml of 3 M HCl. Follow the same impinger extracting and quantitative rinsing procedure carried out in sample analysis. Stopper the flask, shake briefly, let stand 30 min in the dark, and titrate with the samples.

(NOTE: The blank must be handled by exactly the same procedure as that used for the samples.)

7.3 Analysis

(NOTE: Titration analyses should be conducted at the sample-cleanup area in order to prevent loss of iodine from the sample. Titration should never be made in direct sunlight.)

7.3.1 Using 0.01 N sodium thiosulfate solution, rapidly titrate samples in iodine flasks using gentle mixing, until solution is light yellow. Add 4 ml of starch indicator solution and continue titrating slowly until the blue color just disappears. Record V_t, the volume of sodium thiosulfate solution used (ml).

7.3.2 Titrate the blanks in the same manner as the samples. Run blanks each day until replicate values agree within 0.05 ml. Average the replicate titration values which agree within 0.05 ml.

8.0 Calibration and Standards

8.1 Standardize the 0.01 N iodine solution daily as follows: Pipette 25 ml of the iodine solution into a 125-ml Erlenmeyer flask. Add 2 ml of 3 M HCl. Titrate rapidly with standard 0.01 N thiosulfate solution until the solution is light yellow, using gentle mixing. Add four drops of starch

indicator solution and continue titrating slowly until the blue color just disappears. Record V_t, the volume of thiosulfate solution used (ml). Repeat until replicate values agree within 0.05 ml. Average the replicate titration values which agree within 0.05 ml and calculate the exact normality of the iodine solution using equation E-1. Repeat the standardization daily.

8.2 Standardize the 0.1 N thiosulfate solution as follows: Oven-dry potassium dichromate ($K_2Cr_2O_7$) at 180 to 200°C. Weigh to the nearest milligram, two grams of potassium dichromate into a 500 ml volumetric flask, dissolve in deionized, distilled water and dilute to exactly 500 ml. In a 500-ml iodine flask, dissolve approximately 3 g of potassium iodide (KI) in 45 ml of deionized, distilled water, then add 10 ml of 3 M hydrochloric acid solution. Pipette 50 ml of the dichromate solution into this mixture. Gently swirl the solution once and allow it to stand in the dark for 5 min. Dilute the solution with 100 to 200 ml of deionized distilled water, washing down the sides of the flask with part of the water. Titrate with 0.1 N thiosulfate until the solution is light yellow. Add 4 ml of starch indicator and continue titrating slowly to a green end point. Record V_t, the volume of thiosulfate solution used (ml). Repeat until replicate analyses agree within 0.05 ml. Calculate the normality using eq. E-2. Repeat the standardization each week.

9.0 Calculations

Carry out calculations retaining at least one extra decimal figure beyond that of the acquired data. Round off results only after the final calculation.

9.1 Normality of the Standard Iodine Solution.

$$N_I = \frac{N_T V_T}{V_I} \qquad \text{(E-1)}$$

where:

N_I = normality of iodine, g-eq/liter;
V_I = volume of iodine used, ml;
N_T = normality of sodium thiosulfate, g-eq/liter; and
V_T = volume of sodium thiosulfate used, ml.

9.2 Normality of the Standard Thiosulfate Solution.

$$N_T = 2.04 \frac{W}{V_T} \qquad \text{(E-2)}$$

where:

W = weight of $K_2Cr_2O_7$ used, g;
V_T = volume of $Na_2S_2O_3$ used, ml;
N_T = normality of standard thiosulfate solution, g-eq/liter; and
2.04 = conversion factor.

$$= \frac{(6 \text{ eq } I_2/\text{mole } K_2Cr_2O_7)\ (1{,}000 \text{ ml/liter})}{(294.2 \text{ g } K_2Cr_2O_7/\text{mole})\ (10 \text{ aliquot factor})}$$

9.3 Dry Gas Volume - Correct the sample volume measured by the dry gas meter to standard conditions (21°C) and 760 mm Hg.

$$V_{m_{std}} = V_m \left(\frac{T_{std}}{T_m}\right) \left(\frac{P_{bar}}{P_{std}}\right) \qquad \text{(E-3)}$$

where:

$V_{m_{std}}$ = volume at standard conditions of gas sample through the dry gas meter, standard liters;
V_m = volume of gas sample through the dry gas meter (meter conditions), liters;
T_{std} = absolute temperature at standard conditions, 294 K;
T_m = average dry gas meter temperature, °K;
P_{bar} = barometric pressure at the orifice meter, mm Hg; and
P_{std} = absolute pressure at standard conditions, 760 mm Hg.

9.4 Concentration of H_2S - Calculate the concentration of H_2S in the gas stream at standard conditions using equation:

$$C_{H_2S} = \frac{K[(V_I N_I - V_T N_T) \text{ sample} - (V_I N_I - V_T N_T) \text{ blank}]}{V_{m_{std}}} \qquad \text{(E-4)}$$

where (metric units):

C_{H_2S} = concentration of H_2S at standard conditions, mg/dscm;
K = conversion factor = 17.0×10^3

$$= \frac{(34.07 \text{ g/mole } H_2S)\ (1{,}000 \text{ liters/m}^3)\ (1{,}000 \text{ mg/g})}{(1{,}000 \text{ ml/liter})\ (2H_2S \text{ eq/mole})}$$

V_I = volume of standard iodine solution, ml;
N_I = normality of standard iodine solution, g-eq/liter;
V_T = volume of standard sodium thiosulfate solution, ml;
N_T = normality of standard sodium thiosulfate solution, g-eq/liter; and
$V_{m_{std}}$ = dry gas volume at standard conditions, liters.

10.0 Stability

The absorbing solution is stable for at least 1 month. Sample recovery and analysis should begin within 1 hour of sampling to minimize oxidation of the acidified cadmium sulfide. Once iodine has been added to the sample, the remainder of the analysis procedure must be completed according to Sections 7.2.2, 7.2.3, and 7.3.

TECHNICAL REPORT DATA
(Please read Instructions on the reverse before completing)

1. REPORT NO. EPA 600/4-77-008a	2.	3. RECIPIENT'S ACCESSION NO.
4. TITLE AND SUBTITLE STANDARDIZATION OF METHOD 11 AT A PETROLEUM REFINERY-VOLUME I		5. REPORT DATE January 1977
		6. PERFORMING ORGANIZATION CODE
7. AUTHOR(S) George W. Scheil and Michael C. Sharp, Midwest Research Institute		8. PERFORMING ORGANIZATION REPORT NO.
9. PERFORMING ORGANIZATION NAME AND ADDRESS Midwest Research Institute, 425 Volker Boulevard, Kansas City, Missouri 64110		10. PROGRAM ELEMENT NO. 1HD621
		11. CONTRACT/GRANT NO. 68-02-1098
12. SPONSORING AGENCY NAME AND ADDRESS Environmental Monitoring and Support Laboratory, Office of Research and Development, U.S. Environmental Protection Agency, Research Triangle Park, North Carolina 27711		13. TYPE OF REPORT AND PERIOD COVERED
		14. SPONSORING AGENCY CODE EPA-ORD
15. SUPPLEMENTARY NOTES		

16. ABSTRACT

Method 11 (Federal Register, 39, pp. 9321-9323, March 8, 1974), "Determination of Hydrogen Sulfide Emissions from Stationary Sources," is subject to serious mercaptan interference. Several alternate absorbing reagents were evaluated, including several salts of cadmium and zinc. The solution pH was adjusted to obtain a high collection efficiency for H_2S without also collecting mercaptans. The most selective absorbing solution was 0.16 M cadmium sulfate at a pH of 3.0. The H_2S collection efficiency was 96 percent, and mercaptan concentration equal to the H_2S gave results about 5 percent high. The effect of 14 variables on the analysis were evaluated in a ruggedness test. The optimized procedure was then field tested at three refineries under a variety of conditions. The laboratory and field tests were then used to write a final version of the procedure.

17. KEY WORDS AND DOCUMENT ANALYSIS

a. DESCRIPTORS	b. IDENTIFIERS/OPEN ENDED TERMS	c. COSATI Field/Group
Air pollution Gases Hydrogen sulfide Measuring Petroleum refineries Thiols	Methods evaluation Methods development Stationary sources	13B

18. DISTRIBUTION STATEMENT RELEASE TO PUBLIC	19. SECURITY CLASS *(This Report)* UNCLASSIFIED	21. NO. OF PAGES 69
	20. SECURITY CLASS *(This page)* UNCLASSIFIED	22. PRICE

EPA Form 2220-1 (9-73)

INSTRUCTIONS

1. **REPORT NUMBER**
Insert the EPA report number as it appears on the cover of the publication.

2. **LEAVE BLANK**

3. **RECIPIENTS ACCESSION NUMBER**
Reserved for use by each report recipient.

4. **TITLE AND SUBTITLE**
Title should indicate clearly and briefly the subject coverage of the report, and be displayed prominently. Set subtitle, if used, in smaller type or otherwise subordinate it to main title. When a report is prepared in more than one volume, repeat the primary title, add volume number and include subtitle for the specific title.

5. **REPORT DATE**
Each report shall carry a date indicating at least month and year. Indicate the basis on which it was selected *(e.g., date of issue, date of approval, date of preparation, etc.)*.

6. **PERFORMING ORGANIZATION CODE**
Leave blank.

7. **AUTHOR(S)**
Give name(s) in conventional order *(John R. Doe, J. Robert Doe, etc.)*. List author's affiliation if it differs from the performing organization.

8. **PERFORMING ORGANIZATION REPORT NUMBER**
Insert if performing organization wishes to assign this number.

9. **PERFORMING ORGANIZATION NAME AND ADDRESS**
Give name, street, city, state, and ZIP code. List no more than two levels of an organizational hirearchy.

10. **PROGRAM ELEMENT NUMBER**
Use the program element number under which the report was prepared. Subordinate numbers may be included in parentheses.

11. **CONTRACT/GRANT NUMBER**
Insert contract or grant number under which report was prepared.

12. **SPONSORING AGENCY NAME AND ADDRESS**
Include ZIP code.

13. **TYPE OF REPORT AND PERIOD COVERED**
Indicate interim final, etc., and if applicable, dates covered.

14. **SPONSORING AGENCY CODE**
Leave blank.

15. **SUPPLEMENTARY NOTES**
Enter information not included elsewhere but useful, such as: Prepared in cooperation with, Translation of, Presented at conference of, To be published in, Supersedes, Supplements, etc.

16. **ABSTRACT**
Include a brief *(200 words or less)* factual summary of the most significant information contained in the report. If the report contains a significant bibliography or literature survey, mention it here.

17. **KEY WORDS AND DOCUMENT ANALYSIS**
(a) DESCRIPTORS - Select from the Thesaurus of Engineering and Scientific Terms the proper authorized terms that identify the major concept of the research and are sufficiently specific and precise to be used as index entries for cataloging.

(b) IDENTIFIERS AND OPEN-ENDED TERMS - Use identifiers for project names, code names, equipment designators, etc. Use open-ended terms written in descriptor form for those subjects for which no descriptor exists.

(c) COSATI FIELD GROUP - Field and group assignments are to be taken from the 1965 COSATI Subject Category List. Since the majority of documents are multidisciplinary in nature, the Primary Field/Group assignment(s) will be specific discipline, area of human endeavor, or type of physical object. The application(s) will be cross-referenced with secondary Field/Group assignments that will follow the primary posting(s).

18. **DISTRIBUTION STATEMENT**
Denote releasability to the public or limitation for reasons other than security for example "Release Unlimited." Cite any availability to the public, with address and price.

19. & 20. **SECURITY CLASSIFICATION**
DO NOT submit classified reports to the National Technical Information service.

21. **NUMBER OF PAGES**
Insert the total number of pages, including this one and unnumbered pages, but exclude distribution list, if any.

22. **PRICE**
Insert the price set by the National Technical Information Service or the Government Printing Office, if known.