EPA-R2-73-227
MAY 1973

Environmental Protection Technology Series

Pyrographic Gross Characterization of Water Contaminants

Office of Research and Monitoring
U.S. Environmental Protection Agency
Washington, D.C. 20460

RESEARCH REPORTING SERIES

Research reports of the Office of Research and Monitoring, Environmental Protection Agency, have been grouped into five series. These five broad categories were established to facilitate further development and application of environmental technology. Elimination of traditional grouping was consciously planned to foster technology transfer and a maximum interface in related fields. The five series are:

1. Environmental Health Effects Research
2. Environmental Protection Technology
3. Ecological Research
4. Environmental Monitoring
5. Socioeconomic Environmental Studies

This report has been assigned to the ENVIRONMENTAL PROTECTION TECHNOLOGY series. This series describes research performed to develop and demonstrate instrumentation, equipment and methodology to repair or prevent environmental degradation from point and non-point sources of pollution. This work provides the new or improved technology required for the control and treatment of pollution sources to meet environmental quality standards.

EPA-R2-73-227
May 1973

PYROGRAPHIC GROSS CHARACTERIZATION OF WATER CONTAMINANTS

by

Ihor Lysyj and P. R. Newton

Contract No. 14-12-802
Project No. 16040 EXD

Project Officer
H. Page Nicholson
Southeast Environmental Research Laboratory
Athens, Georgia 30601

prepared for
OFFICE OF RESEARCH AND MONITORING
U.S. ENVIRONMENTAL PROTECTION AGENCY
Washington, D.C. 20460

For sale by the Superintendent of Documents, U.S. Government Printing Office, Washington, D.C. 20402
Price $1.25 domestic postpaid or $1 GPO Bookstore

EPA Review Notice

This report has been reviewed by the Environmental Protection Agency and approved for publication. Approval does not signify that the contents necessarily reflect the views and policies of the Environmental Protection Agency, nor does mention of tradenames or commercial products constitute endorsement or recommendation for use.

ABSTRACT

A method was developed for direct analysis of organic materials in aqueous solutions based on thermal fragmentation followed by gas-chromatographic separation and detection of the resulting derivative compositions. Such thermal fragmentation processes were found to be quantitatively linear, i.e., response is proportional to concentration, and independent for each organic compound in a mixture. In addition, the pyrographic pattern produced by a mixture of organic compounds is a simple arithmetic summation of contributing patterns of each compound present.

A recorded pattern of pyrolytically produced fragments for a given water sample reflects the total nature of its organic composition, and can be interpreted and differentiated in a number of ways. Using *a priori* established calibration patterns for individual components to be found in a mixture, the pattern produced by a mixture can be analyzed mathematically. The system can be calibrated in terms of pure organic compounds, classes of organic materials, or any other arbitrarily defined organic mixtures such as those found in industrial waste effluents.

The practical hydrochemical methodology, which was developed as a result of this effort, comprises analytical and data processing hardware, mathematical logic, and computer procedures and programs for data analysis and interpretation. The instrumentation was designed and assembled in a unitized package, and required only electrical and telephone lines for its operation. The Mark 1 prototype instrument was tested in a trailer under field conditions of operation for 2 years. An automated Mark 2 instrument was fabricated.

The practical utilization of this new hydrochemical tool was studied in three areas: water pollution surveillance, waste treatment processes, and characterization of natural unpolluted water.

This report was submitted in fulfillment of Contract No. 14-12-802 under the sponsorship of the Environmental Protection Agency.

CONTENTS

Abstract iii
Section I: Conclusions 1
Section II: Recommendations 3
Recommendation 1 3
Recommendation 2 5
Recommendation 3 6
Section III: Introduction 9
Section IV: Pyrographic Methodology 11
Principles of Pyrography 11
Instrumentation 16
Computer Procedures 26
Experimental Conditions 27
Section V: Application Research 37
The Concept of Multicomponent Pattern Recognition
and Differentiation 37
Section VI: Acknowledgements 55
Section VII: References 57
Section VIII: Publications 59
Section IX: Appendix 61
Computer Programs 61
Computations 61
DAY Program 61
CALIF Program 63
BAJA Program 65
BAJA-1 Program 73
BAJA-2 Program 80
Example of BAJA Computations 90

ILLUSTRATIONS

1. Pyrogram of Oleic Acid 12
2. Mark 1 Pyrographic Analyzer 17
3. Cross-Sectional View of the Pyrolytic Furnace Unit . . 19
4. Mark 2 Pyrographic Analyzer Schematic 22
5. Rocketdyne Mark 2 Pyrographic Analyzer 23
6. Peak Intensity Versus Temperature 28
A-1. Flow Diagram of CALIF 64
A-2. Flow Diagram of BAJA 68
A-3. Flow Diagram of BAJA-1 75
A-4. Flow Diagram of BAJA-2 81

TABLES

1. Multiple Analyses of Mixtures of Glycerol, DL-Valine, and Hexanoic Acid in Aqueous Solutions 14
2. CALIF for Albumin, Normalized Conditions 31
3. CALIF for Glucose, Normalized Conditions 32
4. CALIF for Oleic Acid, Normalized Conditions 33
5. Comparison of Pyrograms for Glucose, Albumin, and Oleic Acid 30
6. Analysis of Mixed Solutions 34
7. Typical Printout of BAJA Program 35
8. Pyrographic Fingerprints of Waste Effluents 39
9. Qualitative Analysis of Pyrograms for Various Industrial Waste Effluents 41
10. Analysis of a Three-Component Mixture of Industrial Wastes . 43
11. Analysis of Mixed Solution of Industrial Waste Effluents . 45
12. Analysis of Mixed Industrial Wastes in Natural Water Matrix. 47
13. Reduction of Organic Load 49
14. Degradation of Organics in Poultry Waste 50
15. Organic Composition in Natural Waters 53

SECTION I

CONCLUSIONS

A 26-month field study has been conducted in Athens, Georgia, to (1) determine the theoretical and practical feasibility of using the pyrographic method of analysis as a tool in water pollution surveillance and monitoring activities, and (2) evaluate performance of the Mark 1 pyrographic analyzer. As a result of this study, the principles of quantitative pyrography were established and verified experimentally. The application of the theory of multicomponent pattern recognition and differentiation to the characterization of waste effluents was demonstrated. Analytical hardware, mathematical logic, and computer procedures, which are necessary for implementation of the concept, were developed. All the system elements were integrated in the Mark 1 pyrographic analyzer and made operational. The advanced, automated Mark 2 instrument was designed and fabricated.

The ability of this technique to perform direct analysis of mixed organic compounds at ppm levels in aqueous solutions and to determine the identity and quantity of organic materials present was experimentally demonstrated. A method was developed for gross definition of industrial wastes. Using this method, the possibility of identification of sources of pollution, and the quantitative determination of contributions of wastes from different sources to the total pollution load of a given water body, was demonstrated in laboratory experiments. This method is based on the theory of multicomponent pattern recognition and differentiation, and takes advantage of the premise that each type of industrial waste has an overall chemical composition characteristic to its operation. The overall characteristics of such waste compositions expressed as pyrographic fingerprints permit identification of waste sources, and determination of their quantities in a solution containing a number of various wastes.

Organic composition of various sources of unpolluted natural waters in the southeast was characterized and a scheme for natural water classification was suggested. The possibility of using a pyrographic method of analysis for control and optimization of treatment plants was demonstrated.

The described concept and the mode of its practical use are new, and further improvement of the method in terms of enlarging its analytical capabilities and operational reliability is possible.

SECTION II

RECOMMENDATIONS

Based on the results of this study, recommendations are made for future research and practical utilization of pyrographic methodology. The recommendations cover areas in which exploratory research was carried out: water pollution monitoring, waste treatment processes, and classification of natural wastes. The following discussion defines each problem, describes the state of the art, outlines proposed solutions, and states action needed.

Recommendation 1

Area of Application (Water pollution monitoring)

Need

The preservation of the quality of water resources has become a national policy. As a first step in implementing this policy, water quality standards were set by the states and approved by the federal government. The setting of "standards" for waterways implies establishment of definite rules, principles, or measures by the authority, an action which is official or quasi-legal (Ref. 1). However, since legal actions cannot be directed against a river or a waterway, the standards for natural waters, to be effective in maintaining its quality, must be related physically to the sources of water quality degradation (i.e., waste effluents discharged by industries and municipalities). Since such discharges are controlled by man, they can be legally regulated. However, a solid scientific and equitable basis for such regulations must be established.

The establishment and enforcement of effluent discharge standards is probably the only realistic method for compliance with "water quality standards" for the waterways. The objective and fair enforcement of such standards requires practical and economical means for the monitoring and surveillance of many pollution sources contributing to a typical water body. The monitoring system must deal with identities of pollution sources and must be capable of determining quantitative contributions from each industrial source.

State of the Art

The hydrochemical monitoring today is directed mainly toward the measurements of water quality parameters, and generates information that is not always correlatable in quantitative terms to specific sources of pollution, especially in waterways with multiple waste discharges.

The current situation is described by Ballinger (Ref. 2) as follows: "It is worth noting that the available systems measure water quality characteristics rather than specific pollutants. While these are important determinations, they are only measurements of pollution impact, and do not identify the type or volume of waste causing the undesirable condition. For truly effective pollution control, information on concentration of a polluting material, as well as the exact point of discharge is required."

Consequently, while there are approximately 500 multiparameter water quality monitoring instruments in use in the United States, they monitor the impact of pollution on water quality rather than pollution itself (Ref. 2). Although identification of specific organic and inorganic pollutants can be undertaken with specialized procedures developed for particular situations, it is not practical in terms of time and manpower to analyze for the wide variety of organic pollutants that may exist in a waterway.

A method is needed for gross characterization of waste load contributions, from a given waste source to a river or a waterway for routine monitoring for pollution control and enforcement.

Approach

This program addressed two fundamental questions dealing with water pollution monitoring: (1) how to identify the source of pollution in natural waters by positive physical means, and (2) how to determine quantitatively the magnitude of contributions of various waste discharges to a common waterway. The approach used in this study departed from conventional working concepts of analytical chemistry (i.e., the resolution of the mixtures into molecular species), followed by identification and quantification. Instead, it was based on the theory of multicomponent pattern recognition and differentiation, which permitted identification of combined chemical compositions, rather than individual components.

Using a method of quantitative pyrographic analysis, it was possible to perform direct analysis for organic composition in water samples. It was possible to define particular industrial wastes as specific identifiable entities in water by considering the pyrographic patterns they produce, and to determine in laboratory experiments, identities and quantities of a number of industrial wastes present in a mixture.

Action Needed

Both the theory and practice of the described methodology are new, and while the possibility for direct pollution monitoring of waterways is indicated, additional research work will be required to reduce the proposed concept to a practical tool of water pollution monitoring and enforcement.

As far as application of this technique to pollution monitoring is concerned, the following are needed:

1. Further development and modification of operating procedures to increase the complexity of the pyrographic patterns. The increased pattern complexity will produce more bits of information from a given program and, hence, increase the resolution power of the technique.
2. Further improvement in the reliability of the system by modifications in the temperature control and sample injection subsystems.
3. Evaluation of variations of chemical compositions in various industrial waste discharges, and development of a statistical model for defining a "mean" compositional standard or a "CALIF" for a specific waste. The mean compositional pattern for a given industry will be used in establishing the mathematical equations for identification and quantification of waste from such a discharge in a waterway.
4. Further study on identification and determination of concentration of industrial wastes in model waterways.

Recommendation 2

Area of Application (Waste treatment processes)

Need

A principal means of industrial waste treatment in the southeast is lagooning. Anaerobic and aerobic lagoons, and combinations of both, are used extensively. With the establishment of water quality criteria, a question was raised by Middleton and Bunch (Ref. 3) and Bersem and Ryckman (Ref. 4) as to whether effluent quality produced by the oxidation ponds was adequate. A recent EPA report (Ref. 5) states that: "Operational data from oxidation ponds indicates that effluent quality will not meet water quality criteria all the time," and "Performance criteria cannot be predicted for facultative aerated lagoons prior to actual operation."

To improve operations of waste treatment facilities, an analytical methodology capable of monitoring compositional changes in waste water streams is needed. The applicability of the pyrographic method of analysis to this problem was investigated under one task of the program.

State of the Art

Application of the pyrographic method of analysis to the monitoring of efficiencies of combined anaerobic-aerobic waste treatment was studied under this program. The waste facility studied consisted of one small

anaerobic and three large aerobic ponds. It was found, using pyrography, that the anaerobic pond, which constituted a small part of the physical plant of the facility, removed up to 80 percent of the organic load. The second and third aerobic ponds, which constituted more than 60 percent of the physical plant of the facility, removed only 44 BOD equivalent units. It is apparent that such a type of waste treatment facility is inefficient. In further studies, it was found that in some cases, because of photosynthetic activity, the final effluent had a higher organic load than that found in the intermediate oxidation pond.

Approach

A pyrographic method of analysis was used for the study of efficiencies of anaerobic and aerobic waste treatment processes.

Action Needed

It is indicated from this study that in combined anaerobic-aerobic systems, the anaerobic ponds function as the principal means for organic load reduction. A study dealing with the optimization of existing lagoon treatment systems and the proper engineering design of future plants should be carried out.

Recommendation 3

Area of Application (Classification of natural waters and eutrophication studies)

Need

The understanding of the eutrophication phenomenon, leading to a retardation of aging processes in lakes, is essential to conservation of natural fresh water resources. A method for type classification of lakes, which is relatable to the eutrophication potential of a given lake, is highly desirable. The residual organic matter in a lake may be largely a manifestation of a lake's eutrophic state and may be reflected in periodic algae blooms. The algae blooms fluctuate significantly in time, but the composition of dissolved and particulate organic matter is more stable (Ref. 6). For this reason, determination of such compositions could provide simpler means for lake surveillance than continuous monitoring for the appearance of periodic algae blooms. The pyrographic method could provide effective and practical capability for such a task.

State of the Art

The eutrophication-related measurements performed today include determination of phosphates and nitrates, organic carbon, and various other

physical and chemical parameters. The more detailed analysis of organic composition of water samples is not readily undertaken due to complicated existing procedures.

Approach

It was shown by Birge and Juday (Ref. 6) that the organic background of natural waters consists essentially of carbohydrates, proteins, and lipids. The relative proportions of such materials form a pattern which is relatable to total organic carbon concentration. Using this model, a number of natural water sources in the southeast were analyzed pyrographically. With the exception of the brown-colored, low-pH waters of the coastal swamps of Georgia, a similarity was observed between the organic composition reported by Birge and Juday and that found in the southeast.

Action Needed

The study on organic composition of natural waters conducted under this program was too limited in scope to draw any broad conclusions. A considerable amount of field work will be needed to develop a practical hydrochemical scheme for the classification of natural waters and to relate such a classification scheme to the eutrophication phenomenon. The enlargement of the model from three classes (proteins, carbohydrates, and lipids) to a number of subclasses for each class will undoubtedly increase the resolution of the model and lead to a more precise type of classification.

INTRODUCTION

This program is a continuation of a research and development effort to establish means for rapid data acquisition to control organic pollution derived from industrial and municipal wastes. The initial 12-month study was started on 28 June 1968 under FWPCA Contract No. 14-12-424. It dealt with the design and assembly of working prototype instrumentation, study of various modes of operation, and limited preliminary field testing of the system. The essential components of analytical hardware were assembled in a unitized package, and the operating procedures were established. The field tests were carried out using the Middle Oconee River Watershed as a hydrological model. The preliminary data interpretation of the initial field experiments indicated that application of pyrographic methodology in the area of organic waste pollution control might be useful (Ref. 7).

Reported here are the results of a 26-month continuation study that was initiated on 13 November 1969 under EPA Contract No. 14-12-802. The overall objective of this exploratory research was to study and define areas of potential applications of the pyrographic method of analysis in water pollution control, especially in areas where advancement of the state of the art is needed. In addition, the pyrographic methodology was further refined and principles of its operation were clearly defined. Specific tasks of this study included: (1) computerization of an instrumental system for more efficient data handling and computation of results, (2) development of procedures for qualitative and quantitative differentiation between various industrial wastes present in admixtures, and (3) the application of pyrography in the area of waste treatment process control. (The term "qualitative" is used in this case for definition of identities of waste sources, rather than identification of molecular species present in each source.)

In the second phase of this program, design and fabrication of a second, more advanced pyrographic instrument were accomplished. This instrument was needed to broaden the scope of research, and to permit more detailed investigations of the utility of this technique in several areas of potential applications. In addition, consideration was given to the development of a general scheme for natural water classification, and the establishment of a general index of water quality based on the nature of organic content in water samples.

This effort was exploratory in nature and involved investigation of potential uses of pyrography in water pollution control and identification of specific areas where more detailed investigations are needed.

The object of this study was to determine the feasibility of the pyrographic method of analysis for the qualitative and quantitative characterization of organic pollutants in rivers and streams. For the purpose of this report, pyrographic analysis is defined as the method in which water samples containing organic materials are subjected to high-temperature pyrolysis in the absence of oxygen whereby the organic species are fragmented to produce volatile gases. The gases are then separated in a gas chromatographic column and detected with a flame-ionization detector. The resulting "pyrogram" serves as a fingerprint for the initial compounds, with the proportions of volatile species formed being unique to the chemical structure of the parent material.

Pyrography as a tool for identification of organic species is old in the art. Greenwood, Knox, and Milne (Ref. 8) were able to characterize various carbohydrates as early as 1961, while Winter and Albro (Ref. 9) differentiated amino acids by pyrography in 1964. Reiner (Ref. 10) identified bacterial strains using the method in 1965. Unfortunately, quantitative analysis has not been achieved until now because of unsatisfactory reproducibility of the pyrograms. It is believed this occurred because of the nonreproducible mode of heat application. The reproducible mode of heat application on analyzed materials is essential to reproducibility of pyrolytic processes and, for this reason, an early task of this program was to develop a means for maintaining controlled temperature of the pyrolysis and providing for a reproducible mode of sample injection into the thermal environment of the pyrolysis tube. The next task was to develop the required computer programs, and then to test the method for application to rivers and streams.

This report covers work performed on EPA Contract No. 14-12-802, for the period November 1969 to February 1972. The experimental effort was carried out at the Rocketdyne Field Laboratory, Athens, Georgia, which was located on University of Georgia property, in the near vicinity of the Southeast Environmental Research Laboratory of the Environmental Protection Agency. For purposes of clarity, some of the earlier work Rocketdyne performed for the EPA under Contract No. 14-12-424 (Ref. 7) is included in this report. This earlier work led to the present program.

SECTION IV

PYROGRAPHIC METHODOLOGY

Principles of Pyrography

A pyrogram of a mixture of organic compounds is a composite pyrogram. It is a simple arithmetic summation of pyrographic fingerprints of all organic compounds present in the mixture. This is explained as follows. When a single organic compound is being pyrolyzed, a number of derivative molecular fragments are produced. They are represented on the potentiometric recorder chart as a series of peaks with varying retention times and peak intensities (Fig. 1). Many organic compounds produce similar products when pyrolyzed. These will manifest themselves on a pyrogram as peaks with identical retention times. However, the intensities of such peaks will vary, producing a pattern specific to that of the parent material.

If more than one organic compound is pyrolyzed simultaneously, the pyrographic representation will be a summation of pyrograms produced by individual compounds. In this case, the common peaks for each component will be a summation of contributions from each compound. The specific peaks will, of course, appear independently.

Whether 2 or 2000 compounds are present in the mixture, the common peaks will be summations of the contributions from each contributing compound, and specific peaks will appear with identities of their own.

Normally, it is possible to set a linear equation for each peak of a pyrogram, and then solve a series of simultaneous equations for the unknown concentrations of organic materials represented by the pyrogram. The possibility of such a task was described by Lysyj, Nelson, and Webb (Ref. 11) in 1970, in the following experiment.

Using an instrumental arrangement consisting of a gas chromatograph, a pyrolysis tube, and a specially designed injection valve, pyrograms for glycerol, DL-valine, and hexanoic acid were obtained. The intensities of each peak for each material were determined and used in formulating a series of linear equations. Mixed solutions of these materials then were prepared and also analyzed pyrographically. The concentrations of the individual components in a mixture were determined by relating the intensities of all observed pyrographic peaks to the concentrations of each component. The computations were performed by the least-squares solution of linear equations, and showed good agreement with the known composition of the samples.

This work demonstrated that the processes of pyrolytic fragmentation when carried out in the presence of large quantities of water were: (1) quantitatively linear, (2) independent for each compound in a

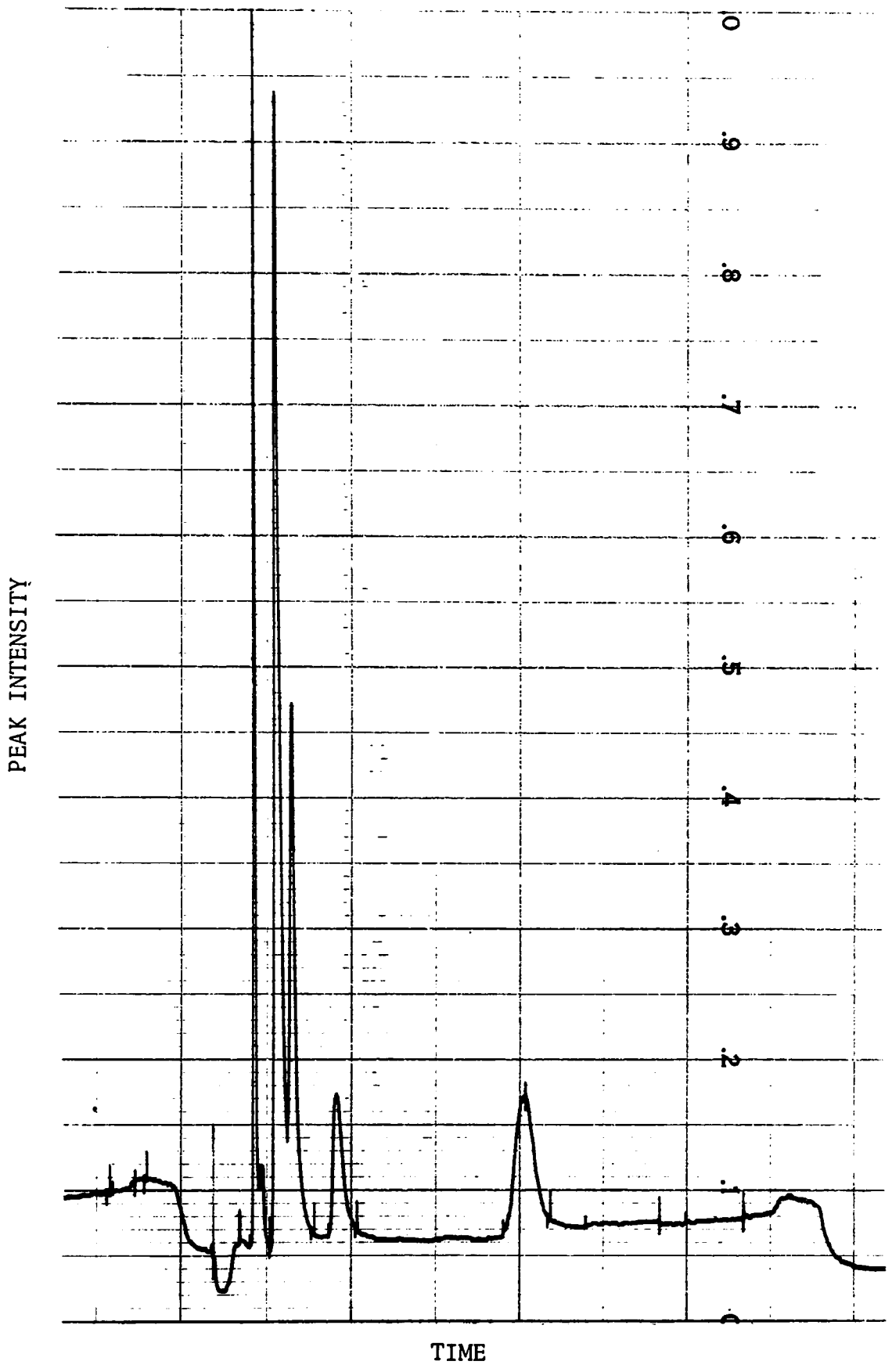

Figure 1. Pyrogram of Oleic Acid

mixture, and (3) the pyrogram of a multicomponent mixture was a simple arithmetic summation of the contributions from each component in the analyzed mixture.

The maximum number of unknowns into which pyrographic data can be solved is equal to the number of peaks observed on a pyrogram. The pyrogram, of course, can be solved into a lesser number of compositions, and a least-squares approach to the solutions can be used in this case.

The organic compositions into which pyrographic information can be differentiated are defined by calibrations, which provide the coefficients for a series of simultaneous equations. The system can be calibrated in terms of molecular entities, classes of organic materials, or any other arbitrarily defined combination of organic molecules.

Table 1 lists the simplest form of mathematical differentiation and compositional determination of mixed organic solutions. Here, three compounds, glycerol, DL-valine, and hexanoic acids, were defined pyrographically as the standards, and then the pyrogram of the mixture of three is interpreted mathematically in terms of those standards. The standards, however, do not have to be pure organic compounds. As a matter of fact, any arbitrarily defined combination of organic species present in a mixture can be classified as a standard. Such arbitrarily defined groupings could be classes or organic compounds or multicomponent mixtures of organics as found in industrial and municipal waste effluents. When a number of such defined organic compositions are mixed in an aqueous solution, concentrations of each can be computed. In this case, calibration constants for individual groupings of organic matter are used as coefficients in linear equations.

A number of other ways can be used to differentiate composite pyrograms. For example, it might be desirable to determine the concentration of a specific chemical toxicant present in an admixture with a number of various industrial wastes. Such a system can be calibrated for a single compound of interest and the groupings of compounds as found in industrial wastes. Then the composite pyrogram could be differentiated into a specific compound and industrial waste compositions.

Basically, the calibration of the system determines the type of information that will be obtained from a composite pyrogram. The mathematical technique for treatment of pyrographic data in the described manner was proposed at the "Symposium on Organics in Natural Waters," University of Alaska, 1968 (Ref. 12), and is based on the use of least-squares solution to a number of linear equations. In a pyrogram from an organic material, the area of a peak is directly proportional to the concentration of the material. The linear equation relating these quantities is

$$y_i = a_{ij}c_j$$

TABLE 1. MULTIPLE ANALYSES OF MIXTURES OF GLYCEROL, DL-VALINE, AND HEXANOIC ACID IN AQUEOUS SOLUTIONS

Compound	Present, ppm	Found, ppm	Difference, ppm
	Solution 1		
Glycerol	33.3	34.4	+1.1
DL-Valine	33.3	32.8	-0.5
Hexanoic Acid	33.3	32.8	-0.5
	Solution 2		
Glycerol	57.1	58.1	+1.0
DL-Valine	28.6	26.6	-2.0
Hexanoic Acid	14.3	15.3	+1.0
	Solution 3		
Glycerol	25.0	27.3	+2.8
DL-Valine	50.0	47.4	-2.6
Hexanoic Acid	25.0	24.7	-0.3

where i identifies the peak, j identifies the material, y is the area of peak i, a_{ij} is the area per unit concentration of the jth material at peak i, and c is the concentration of the jth material.

In samples containing more than one organic material, the total area of a peak in a pyrogram is the sum of the contributions from each material. Therefore, $c_1, c_2, \ldots, c_m$ can represent the concentrations of the materials in the sample and $y_1, y_2, \ldots, y_n$ are the observed peak areas in the pyrogram. Then the total peak area (y_1) of peak i will be:

$$y_1 = \sum_{j=1}^{m} a_{ij} c_j$$

Thus, the equation relating the area of the first peak to the unknown concentrations would be:

$$y_1 = a_{11}c_1 + a_{12}c_2 + \ldots + a_{1m}c_m$$

With the proportionality constants (a_{ij}) determined by calibration and the peak areas (y_1) observed for the sample, the pyrogram can be completely defined by a set of n equations in the m unknown concentrations.

The least-squares solution to this problem can be found in the following set of derived equations:

$$\sum_{i=1}^{n} a_{i1}y_i = \left(\sum_{i=1}^{n} a_{i1}^2\right)\hat{c}_1 + \left(\sum_{i=1}^{n} a_{i1}a_{i2}\right)\hat{c}_2 + \cdots + \left(\sum_{i=1}^{n} a_{i1}a_{im}\right)\hat{c}_m$$

$$\sum_{i=1}^{n} a_{i2}y_i = \left(\sum_{i=1}^{n} a_{i2}a_{i1}\right)\hat{c}_1 + \left(\sum_{i=1}^{n} a_{i2}^2\right)\hat{c}_2 + \cdots + \left(\sum_{i=1}^{n} a_{i2}a_{im}\right)\hat{c}_m$$

$$\sum_{i=1}^{n} a_{i3}y_i = \left(\sum_{i=1}^{n} a_{i3}a_{i1}\right)\hat{c}_1 + \left(\sum_{i=1}^{n} a_{i3}a_{i2}\right)\hat{c}_2 + \cdots + \left(\sum_{i=1}^{n} a_{i3}a_{im}\right)\hat{c}_m$$

$$\vdots$$

$$\sum_{i=1}^{n} a_{im}y_i = \left(\sum_{i=1}^{n} a_{im}a_{i1}\right)\hat{c}_1 + \left(\sum_{i=1}^{n} a_{im}a_{i2}\right)\hat{c}_2 + \cdots + \left(\sum_{i=1}^{n} a_{im}^2\right)\hat{c}_m$$

This mathematical treatment of a pyrogram is capable of rapidly providing quantitative compositional information about a multicomponent organic mixture.

Instrumentation

Two pyrographic instrumentation systems were fabricated during the contract period. Design and fabrication of the Mark 1 pyrographic analyzer began under EPA Contract No. 14-12-424 (June 1968 through December 1969), while the data processing equipment was integrated into the system in the early stages of this program. The experimental data reported here were obtained using the Mark 1 instrument. The automated Mark 2 pyrographic analyzer was designed and built in the last part of this program and only limited performance testing of Mark 2 was carried out. Design of both systems will be discussed.

Mark 1 Pyrographic Analyzer

The analytical subsystem (Fig. 2) consists of the supply of carrier gases (steam generator and cylinder of helium), sample injector, pyrolysis unit and the flow-stabilization column, gas chromatographic columns (detector and reference arms of the flow system), temperature enclosure with temperature program capability for the columns, hydrogen flame-ionization detector, supplies of combustion gases (oxygen and hydrogen), and associated flow and temperature controllers. The data processing subsystem consists of an electrometer, a potentiometric recorder, a digital integrator, a teletype (equipped with keyboard, punch tape, and tape reader), an audio data set, and a telephone receiver of a commercial telephone service. The latter provides a link with the remote time-sharing computer service.

The instrumentation system is contained in a functionally unitized package, which could be used under field conditions with a minimum of laboratory support. Its design was influenced by the fact that such a unit would serve as a prototype for a generation of automatic, self-contained monitors capable of characterizing organic water pollutants. The principal design requirement of such a unit is integration of the working function into a single instrumental unit with a high degree of mechanical and electronic reliability. These functions include sampling of a water stream, pyrolysis of injected constant-volume water samples, gas chromatographic separation of the produced pyrolytic fragments, detection of the eluted matter, recording of the detector signal, and automatic reduction of the produced data.

As shown in Fig. 2, the upper-left compartment of the prototype instrument contains the sample injection system, the pyrolysis chamber and flow stabilization column, the gas chromatographic column in a thermally controlled enclosure, the hydrogen flame-ionization detector, and the flow and power controls. The lower-right compartment contains the electrometer, while the digital integrator, audio-data set, and telephone are installed in the upper-right compartment. The bottom compartment is used for storage of oxygen and hydrogen gas supplies.

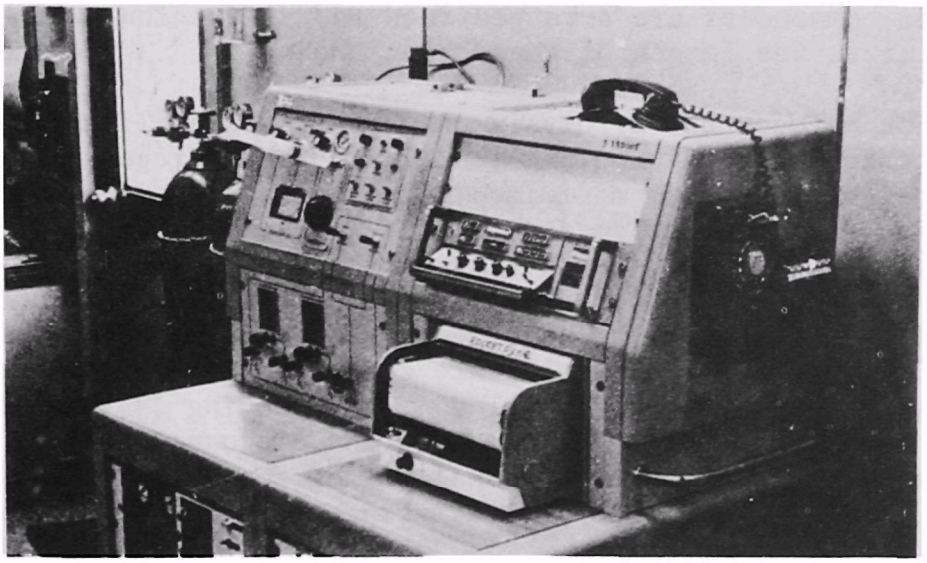

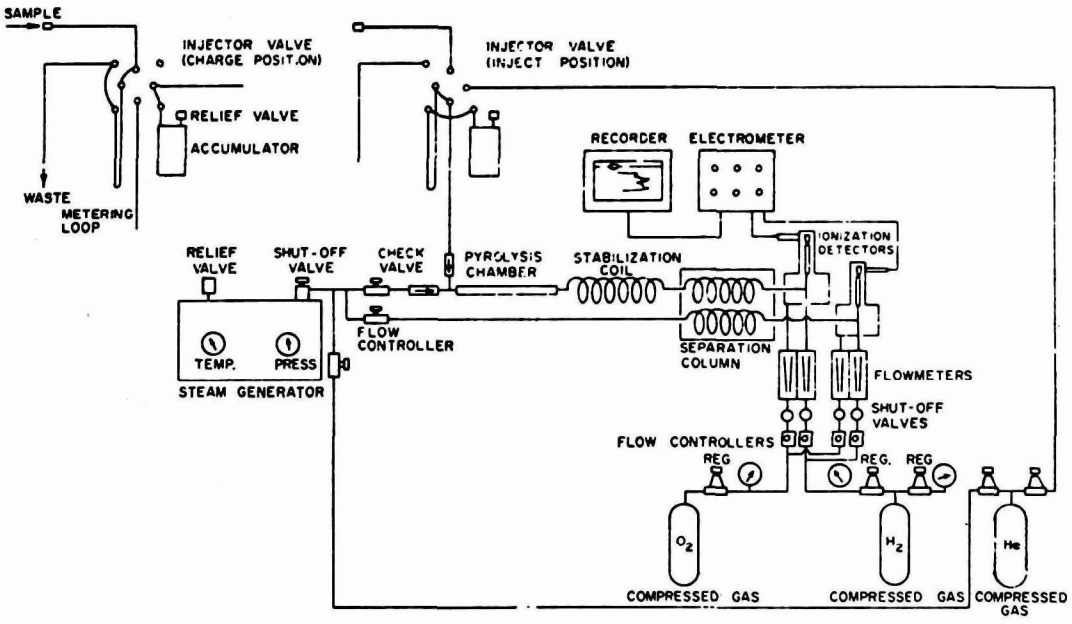

Figure 2. Mark 1 Pyrographic Analyzer

The principal feature of the design is minimization of the length and volume of the connectors between the sampling valve and the pyrolysis chamber. The components are arranged in a radial fashion, which greatly minimizes the length of connecting tubing.

The connection between the pyrolysis chamber-flow stabilization unit and the gas chromatographic column leading to the hydrogen flame-ionization detector is also minimized. This design provides for rugged connection of, and easy access to, the lines for the combustion gases, hydrogen and oxygen, permitting easy access when checking for gas leaks. The gas chromatographic columns, which are functionally the heart of the system, might require a great deal of interchanging. They are mounted on a solid-metal plate connected to, and supported by, the body of the instrument housing. The mounting is such that handling of the columns during connection and disconnection will not stress the extremely fine, low-internal-volume connections between the accumulator, sample loop, check valve arrangement, and pyrolyzing/flow-stabilizing unit.

Sample Injection and Pyrolysis System. The operation of the sample injector is based on the helium gas-pressurized transport of the water sample from the metering loop of the injection valve into the pyrolysis chamber. A two-way valve is used in this arrangement. It is connected to the helium accumulator and the pyrolysis chamber. The two other ports are used for the sample loading. In the operation of the injector, the helium accumulator is automatically pressurized from a helium tank by proper positioning of the valve. The metering loop of the valve (150-milliliter volume) is filled with a water sample, and the valve is rotated, placing the loop containing the sample into alignment with the helium accumulator and the pyrolysis chamber. The helium accumulator pressure is higher than the pressure in the carrier gas line, and forces the measured volume of sample, as a single slug, into the pyrolysis chamber.

The pyrolysis chamber (Fig. 3), previously developed under a company-sponsored program, is constructed from a heavy-walled tube of nickel. Only pure nickel was found to be a satisfactory material for this application. The stainless-steel and nickel alloy tubes both deteriorated after a few months of use. At the front end of the chamber, a Swagelok male connector is welded to the nickel tube to provide a connection with 0.159 cm (1/16-inch) tubing from the sample injector. A second Swagelok male connector at the rear of the chamber connects to the flow-stabilization column. The pyrolysis chamber is filled with loosely packed small metallic rods cut from nickel wire, which serves to disperse the vaporized sample within the chamber.

Positioned axially about the pyrolysis chamber is a helical heating coil of nichrome wire. The heating element is spaced between the pyrolysis chamber and a ceramic primary insulation chamber. The ceramic

(A) STATIONARY FURNACE HOUSING
(B) AND (C) END PLATES
(D) SHUTTER
(F) AND (K) HEATING ELEMENT TERMINALS
(G) PYROLYSIS TUBE
(H) INSULATION CHAMBER
(I) CLOSURE PLATE
(J) AND (N) THERMOCOUPLES
(L) HEAT SHIELD
(M) FLOW-STABILIZATION TUBE
(Q) CONNECTION TO INJECTOR

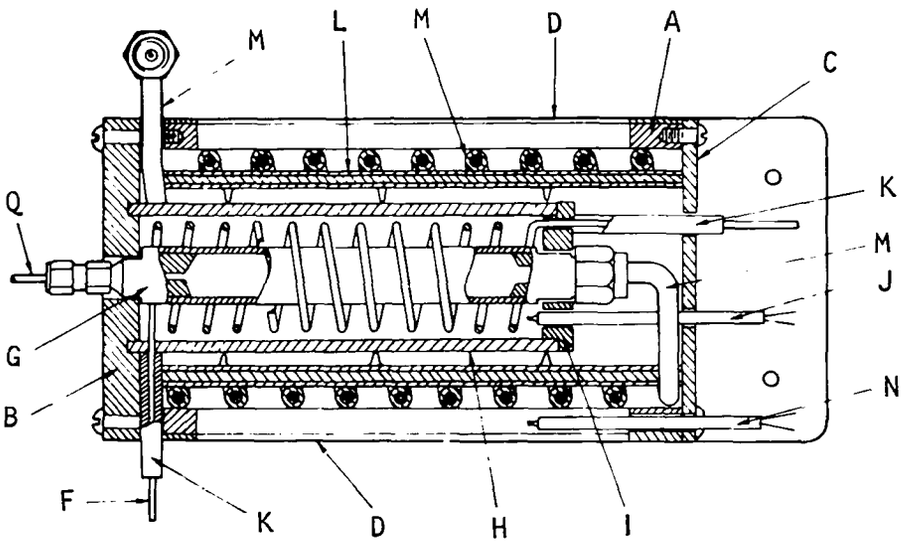

Figure 3. Cross-Sectional View of the Pyrolytic Furnace Unit

tube is closed at the back end with a circular plate of stainless steel. The front end of this tube is positioned in an annular groove of the front end plate.

The heat input to the pyrolysis chamber is controlled with a variable transformer connected to the heating element. A secondary insulation barrier is composed of a stainless-steel heat reflector, several layers of asbestos sheet insulation, and an outer heat reflector of aluminum slip-fitted about the asbestos insulation. The combination of metallic heat reflectors and the asbestos insulation provides thermal stability by diminishing the heat flux from the ceramic insulation chamber. The temperature in the outer zone, which contains the flow stabilization column, is controlled by cylindrical shutters in the furnace housing through a number of elongated windows. Concentrically positioned about the periphery of the housing is a rotatable cylindrical aluminum shutter which is provided with windows of size, shape, and number corresponding to those in the housing. By rotating the shutter, heat loss from the outer zone can be increased or decreased. This design permits the maintenance of two independent

temperatures, one in the pyrolysis chamber and the second around the flow stabilization column, with only one heat source.

Gas Chromatographic Columns. The pyrographic instrument is designed to work with water samples directly (i.e., no prior separation or organic matter from the water matrix is involved). This means that the water vapor from the sample matrix follows the same steps of separation and detection as organic fragments. Because water vapor is present in much larger quantities than the organic constituents, the effect of it on separation and detection operations must be minimized. This requirement quite severely restricts the types of gas chromatographic substrates and detectors that can be used for such application. The following liquid substrates were tested: Carbowax 20M, silicone oil 710, SE-30, m-phenylether (five ring), Apiezon-L, ethylene glycol adipate, and diethylene glycol malonate; none performed satisfactorily. The liquid substrates produced significant bleeds of the stationary phase, making their use impractical. Only inert materials, such as porous glass and Porapak, were found to be satisfactory.

Porous glass is a totally inert, inorganic substrate, prepared by leaching certain formulations of glass. The leaching process dissolves some of the glass components, leaving a honeycomb structure of silicon oxide. The gas chromatographic separations reported for porous glass are similar to separations obtained with silica gel substrates. However, because of large pore size, higher-boiling materials can be more readily eluted from this substrate than from silica gel.

Previous studies at Rocketdyne demonstrated that hydrocarbons from methane through hexadecane (Ref. 13) can be effectively separated on porous glass. Like silica gel, porous glass is a polar substrate and has the tendency to retain polar substances (e.g., amines, alcohols, and carboxylic acids) with considerably greater affinity than nonpolar substances (e.g., hydrocarbons). However, it was found that this difficulty can be overcome when aqueous samples are injected. It is believed that water vapor depolarizes polar sites on the solid matrix, and improves the sharpness and resolution of pyrographic peaks.

The starting material for the column preparation was porous glass (Code 7039 made by Corning Glass Co., New York). The plates of glass were ground and sieved. Material of 40 to 50 mesh size was used in this study. Its physical properties were as follows: surface area, 173.2 m^2/gram; pore volume, 0.109 ml/gram; average pore size, 25.2 Å. 6.1 m (20 feet) of 0.477-cm (3/16-inch), outer-diameter tubing was packed with this material and installed in the pyrograph.

.ie initial experiments with helium carrier gas produced pyrograms ›f very low intensity and poor resolution. However, as additional vater samples were injected, the intensity of the peaks and the degree of resolution improved. Finally, after approximately 15 injections, a broad peak of residual organics (from previously injected samples) was eluted, and the quality of the programs improved sharply. Thereafter, water samples injected at 15- to 20-minute intervals produced well-resolved, highly reproducible pyrograms. Once the porous glass column was conditioned, it produced pyrograms of good quality.

In normal operation of the pyrographic system, the porous glass column is pretreated by injecting distilled water samples, before starting analyses.

Detector. In the initial design of instrument provisions for dual columns, dual-detection modes of operation were made. A dual hydrogen flame-ionization detector made by Hewlett-Packard Co. was selected and installed into the pyrographic apparatus. However, in the actual operation of the instrument, a very stable baseline was obtained with only one working porous glass column; all experiments described herein were obtained in such a mode of operation.

The electrometer, a Hewlett-Packard Model 5750B, is a solid-state, line-operated unit, which is of the differentiating type (i.e., it will differentiate the output of two hydrogen flame-ionization detectors). All components of the pyrographic system, which were commercially available, were selected from suitable sources. Those components not commercially available were designed and fabricated in-house. The commercially procured components included:

1. A two-way, variable-volume valve, Model No. 2013, Carle Instruments, Inc.
2. Dual-flame ionization detector, Hewlett-Packard Corp.
3. Electrometer, Model 5750 B, Hewlett-Packard Corp.
4. Digital integrator, Model 7600A, Hewlett-Packard Corp.
5. Teletype, Model ASR-33, Teletype Corp.
6. Audio-data set, Specialized Communications, Inc.

Mark 2 Pyrographic Analyzer

The main features of the Mark 2 pyrographic analyzer are similar to that of the Mark 1. System components, however, have been rearranged to provide for easier maintenance and repair. The schematic of the system is shown in Fig. 4; Fig. 5 is a photograph of the console. System modifications include an automated sample injection system, versatile control of a temperature program, redesigned pyrolysis chamber, and custom-built steam generator.

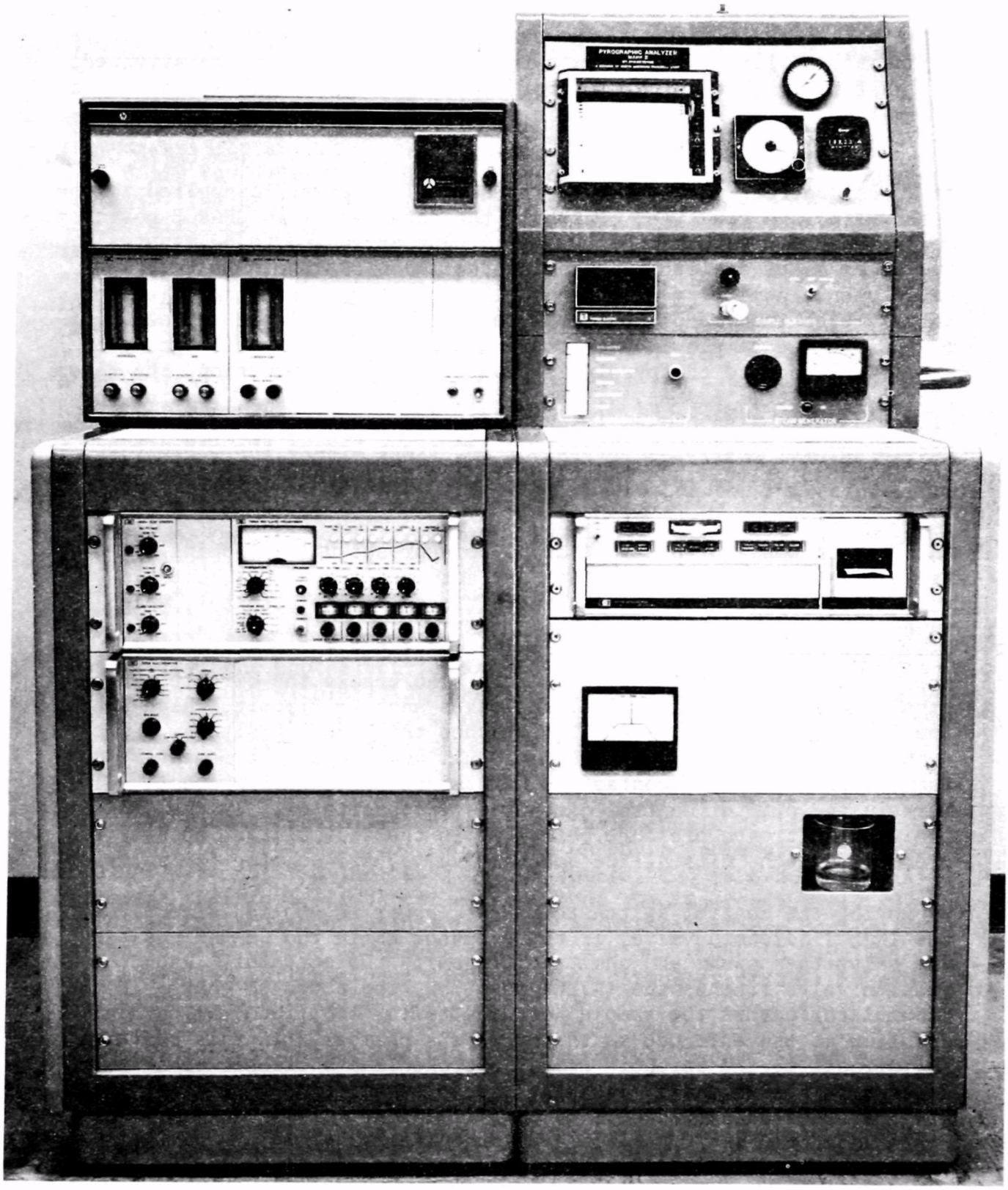

Figure 5. Rocketdyne Mark 2 Pyrographic Analyzer

Sample Injection. The instrument incorporates a manual and automatic injection system. A sample input fitting on the front panel is normally used for manual operation. The reservoir valve directly above the fitting is closed during manual operation. In automatic mode, a syringe is left in place on the panel fitting and the reservoir valve is opened. A large syringe with the plunger removed may be attached to the fitting at the top front of the cabinet to serve as a reservoir. The valve may be used to throttle the flow to the desired rate by observing the discharge at the lower cabinet recess.

When the control switch is moved to AUTOMATIC, power is applied to the timer motor and the timer clutch if the actuator is in CHARGE position. At the end of a time period (preset at any period up to 60 minutes), the timer makes a circuit operating the INJECT solenoid valve. The valve opens, admitting nitrogen to the actuator. When the injection valves reach the INJECT position, the nitrogen charge in the accumulator pushes the sample in the metering loop into the carrier gas flow at the entrance to the pyrolysis chamber. In this position, the timer clutch circuit is broken, allowing the timer to reset. Breaking the clutch circuit also closes a set of contacts in the timer, which stops the integrator analysis. Resetting the timer breaks the circuit to the solenoid valve, thus shutting off the nitrogen and venting the actuator.

When the accumulator pressure drops to a preset value (nominally 20 psi), the pressure switch closes and actuates the RETURN solenoid valve. The valve opens, admitting nitrogen to the actuator, which moves the injection valve to the CHARGE position. As the actuator moves away from the INJECT position, the timer clutch circuit is again energized restarting the cycle. This also breaks the circuit, which stops the integrator analysis, and makes another circuit, which starts the analysis. When the actuator reaches the CHARGE position, a microswitch breaks the start analysis circuit because only a momentary contact is required. If contact is maintained, a thermal protective feature in the printer control circuit is incapacitated. In the CHARGE position, nitrogen pressure builds up in the accumulator, opening the pressure switch, closing the solenoid valve, and venting the actuator.

By moving the control switch to MANUAL, power is applied directly to the INJECT solenoid valve, if the actuator is in the CHARGE position. The valve then opens and admits nitrogen to the actuator. When the injection valve reaches the INJECT position, the nitrogen charge in the accumulator pushes the sample in the metering loop into the carrier gas flow at the entrance to the pyrolysis chamber. In this position, the circuit to the solenoid valve is broken and a circuit to a timer and two relays is made. Breaking the solenoid circuit shuts off nitrogen and vents the actuator.

The timer indicates time digitally in hundreds of minutes from start of injection. One relay opens another set of contacts in the circuit that energized the solenoid valve, but only after the holding contacts have

been closed to maintain the timer and relay circuits. The second relay breaks the circuit that stopped the previous integrator analysis and makes another circuit, which starts the analysis.

Pyrolysis Chamber. The new pyrographic furnace used in the Mark 2 instrument consists of a concentric arrangement of a 0.954 cm (3/8-inch) chamber tube, a heating element, a refractory tube, insulation, and an outer shell. Split end caps support the chamber and provide easy access for service. The chamber is made of nickel tubing, filled with 0.159 cm (1/16-inch) diameter by 0.318 cm (1/8-inch) long nickel pellets. The heating element is made of 92.7 cm (36 1/2 inches) of No. 14 0.165 cm (0.065-inch) Nichrome V wire, supported by the Zircon refractory tube. Tubular ceramic insulators cover the radial extensions of the heating element. Carborundum Fiber-Frax Type F-13-T insulation is used both around the refractory tube and in the end caps.

A chromel-alumel thermocouple is installed in the zone between the heating element and the chamber. Tests have shown that the depth of immersion is well within the high-temperature plateau of an axial traverse of the chamber. A second chromel-alumel thermocouple is installed radially and bears on the outer surface of the refractory tube.

Temperature Control. The inner thermocouple is connected to both a digital indicator and a contactless controller. The controller circuit has a switch to introduce bias with a mercury cell, thus providing a dual-range capability. Circuit components have been chosen to provide ranges of 0 to 540 C and 460 to 1000 C. With this increased sensitivity, the photoelectric controller is able to maintain a furnace temperature within ±2 at 1000 C. (To conserve the mercury cell, the range switch should always be left in the low-range position when the furnace is off.) A fail/safe feature shuts off the power if the thermocouple circuit opens.

Operation of the controller on the same thermocouple as is connected to the digital indicator does not cause an appreciable error in the reading. The digital indicator is, of course, the more-accurate instrument; therefore, if better agreement of the two readings is required at the operating point, the zero adjustment of the controller may be trimmed by the necessary amount. A diode shunt in parallel with the relay coil has been added to the controller circuit to minimize contact bounce and reduce contact wear.

Other Components. The commercially procured components of this instrument include:

1. Gas chromatograph, dual-flame detector, solid-state electrometer Model HP 7612A, Hewlett-Packard Company
2. Digital integrator, Model HP 3371A, Hewlett-Packard Company

3. Potentiometer recorder, Hewlett-Packard Company
4. Temperature controller, Model SS-100 001, Simpson Corp.
5. Digital indicator, Model JP, West Corp. of Gulton Industries, Inc.
6. Sample valve, Model 2013, Carle Instruments, Inc.

Problem Areas

Accurate temperature control of the pyrolysis environment is essential to the reproducibility of pyrographic data. In the initial design of the Mark 1 pyrograph, the temperature of the pyrolysis unit was controlled by a variable powerstat and maintained by balancing the heat input with heat loss. This arrangement was found to be cumbersome and required constant attention for accurate work. A temperature controller designed by West Corp. was incorporated into the instrument, and operated satisfactorily for a number of months. Eventually, however, the relay points became pitted, leading to malfunction of the unit. The temperature control in the Mark 1 instrument was further modified by EPA personnel after the instrument was transferred to Southeast Water Laboratory.

The Simpson Temperature Controller in the Mark 2 instrument proved to be troublesome and required constant repairs. Finally, it was replaced by a powerstat, and temperature of the pyrolysis unit was controlled manually. While this arrangement was found to be functional, automatic control of the temperature of the pyrolytic chamber would be operationally more satisfactory.

Computer Procedures

Use of the instrument for monitoring complex hydrological systems will require computerized data handling. As a part of this instrument system design, two modes of computer use were evaluated. One mode involved an incorporation of a small computer, such as Model PDP/8 (Digital Equipment Corporation) into the system on a permanent basis to perform the necessary computation functions. The other option involved subscription to a commercial computer service on a time-sharing basis, using conventional telephone lines for connection.

Considering the diversity of the potential users for such instrumentation, the computer time-sharing route was selected, mainly because it minimizes capital outlay to the user. The prototype instrument, as it exists today, incorporates the teletype unit and an audio-data set, and requires only the receiver of a conventional telephone to be connected to any one of a number of computer time-sharing services. In short, the instrument system can be used, and will perform all the necessary physical operations and the mathematical calculations at any geographical point that can be reached by power and telephone lines.

The flow diagrams, description, and printouts of computer programs developed under this program are presented in Appendix A.

Experimental Conditions

Standard conditions for operating the instrument were established.

Pyrolysis Temperature

Methyl isobutyl ketone (MIBK) was used as the initial standard test solution, and an analysis was performed under the following temperatures of pyrolysis: 550, 575, 600, 625, and 650 C. The reported temperatures were recorded by a thermocouple located in the proximity of the pyrolysis tube. The actual temperatures inside the pyrolysis tube are higher. In this report, however, observed temperatures are reported, since actual temperatures of pyrolysis can only be estimated.

The CALIFS (i.e., calibrating "fingerprints") for the MIBK aqueous solution obtained at pyrolysis temperatures of 550, 575, 600, 625, and 650 C were established; two major peaks are plotted in Fig. 6. As can be seen, the instrumental response rises almost linearly over the 550 to 625 C temperature range. Above 625 C, the rate of the intensity rise is reduced, signifying approachment of the plateau for instrumental response. At higher temperatures, the probability of an instrument breakdown during periods of unattended operation is increased. To minimize safety hazards, the recorded temperature of 650 C was selected for normal operating conditions.

Gas Chromatographic Column Temperature

The effect of various temperatures imposed on the gas chromatographic column and the effects of the frequency of sample injections were evaluated. These two parameters are interrelated. The frequency of sample injection determines the amount of moisture retained by a column at any given time, and this, in turn, affects the retention times of organic material. The temperature of the column affects both the rates of elution of organic materials and the quantity of water retained by a column, which also affects the retention time for analyzed materials.

Effects of temperature were studied first. The separations were carried out at 110, 150, 175, and 200 C. Samples were injected at constant 15-minute intervals. Working at 110 C column temperature, a number of higher-boiling materials were retained on the column, and were eluted over a considerable period of time, interfering with the analysis of subsequently injected samples. A broad ridge of higher-boiling materials was eluted at 150 and 175 C column temperatures with some overlap into subsequent injection. At a 200 C column temperature, the resolution of frontal peaks was poor. Consequently, 175 C was selected for normal operational conditions.

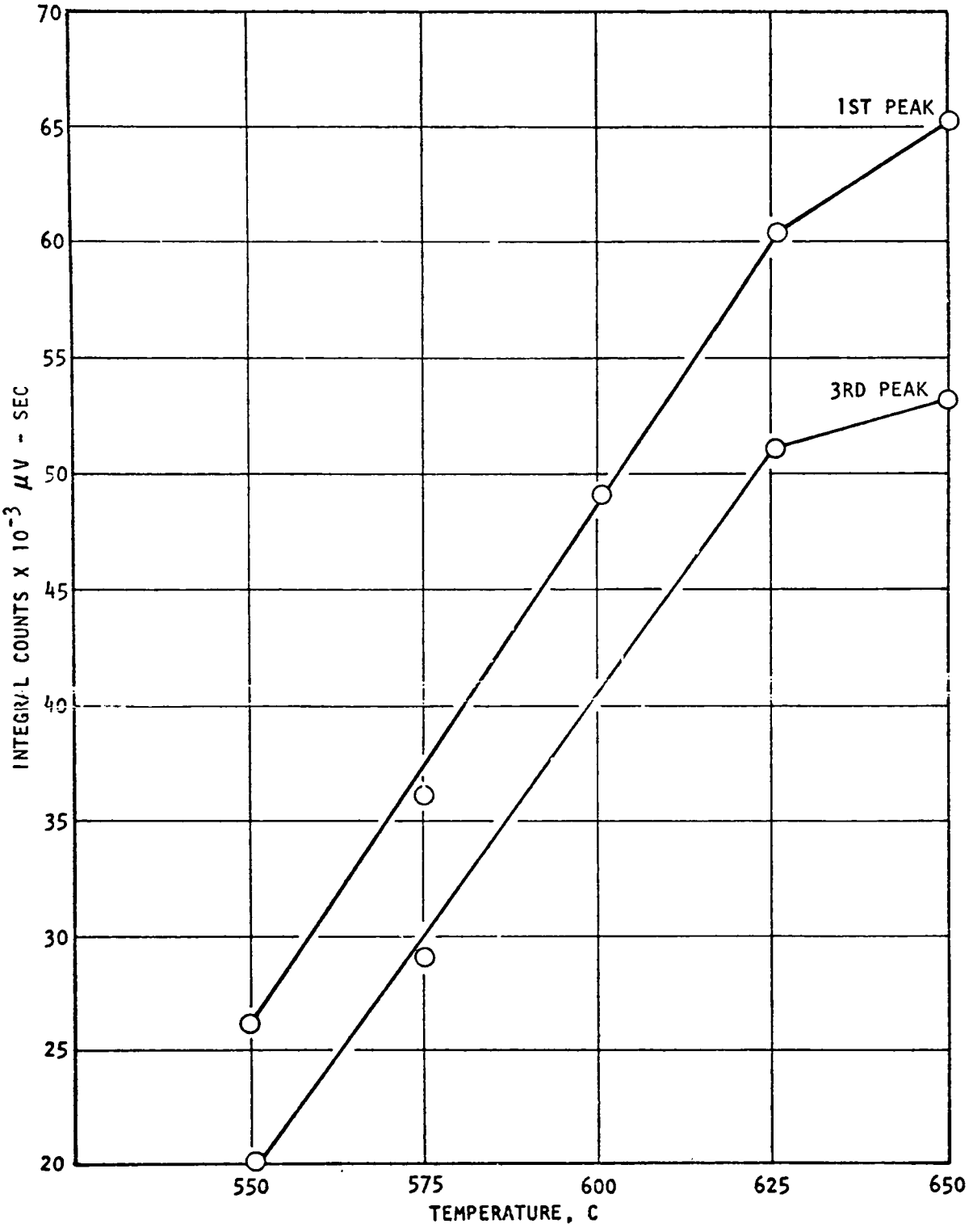

Figure 6. Peak Intensity Versus Temperature

Sample Injection Frequency

The effect of the frequency of sample injection was studied. The samples were injected at 15-, 20-, 25-, and 30-minute intervals, while column temperature was maintained at 175 C. Satisfactory resolution of frontal peaks and complete elution of higher-boiling fractions were achieved when samples were injected at 30-minute intervals, and this frequency of injection was selected for normal operation conditions.

Standard Instrumental Condition

On the basis of completed experiments, normal operating conditions for the pyrograph were established as presented below:

Temperatures, C

Pyrolysis	650 recorded
Gas Chromatography Column	175
Detector	200

Gas Flows, cc/min at 40-psig inlet pressure

Helium	25
Hydrogen	40
Oxygen	180

Column

6.1 m (20 feet) long by 0.477 cm (3/16 inch) diameter, packed with porous glass, 30-50 mesh size

Electrometer

Channel	A (single channel)
Range	10
Attenuation	8

Integrator

Noise Suppression	3
Slope Sensitivity Up	0.03 mv/min
Slope Sensitivity Down	0.03 mv/min
Baseline Delay	0.02 minute
Peak Sum	1000 mv/min
Shoulder Control Front	Off
Shoulder Control Rear	1000 mv/min

Recorder

0.5 or 1 mv full scale

Standard solutions of albumin, glucose, and oleic acid were prepared and pyrographed. These materials are being considered at this time as possible model compositions for proteins, carbohydrates, and fats found in natural waters. CALIFS for all three materials obtained under normalized conditions of operation are reported in Tables 2 through 4.

Pyrographic Analysis of Known Multicomponent Synthetic Mixtures

The pyrographic system was evaluated by performing analyses of synthetically prepared aqueous solutions containing known quantities of albumin, glucose, and oleic acid (as Na-oleate). The instrument was calibrated by obtaining pyrograms or fingerprints, for separate aqueous solutions containing 20-ppm albumin, 20-ppm glucose, and 5-ppm oleic acid (Tables 2, 3, and 4).

The comparison of typical patterns are reprinted in Table 5.

TABLE 5. COMPARISON OF PYROGRAMS FOR GLUCOSE, ALBUMIN, AND OLEIC ACID

Peak No.	Average Retention Time, minutes	Peak Intensities as μV-sec/ppm		
		Glucose	Albumin	Oleic Acid
1	1.79	449	174	1198
2A	2.04	64	---	67
2B	2.15	---	263	149
3	2.79	165	236	3154
4	3.44	71	185	1699
5	5.51	18	17	687
6	13.32	9	167	1615

After CALIFS were obtained for each standard material, a number of mixed solutions of albumin, glucose, and oleic acid were prepared in various ratios and analyzed pyrographically. The analysis of each solution was performed three times. The results for six different solutions are shown in Table 6. Average values and standard deviations are computed from triplicate analyses. A typical BAJA printout (i.e., from the computer program which calculates concentrations of various components in a mixture) is shown in Table 7.

The completed experiment demonstrated that quantitative pyrography is indeed possible, and that solutions containing a number of various organic species could be differentiated into component parts by solving a series of equations in a least-squares mode.

TABLE 2. CALIF FOR ALBUMIN, NORMALIZED CONDITIONS

CALIF 10:34 FNB

RUNS	PEAKS 1	2	3	4	5	6	7	8	9	10
1	180*	215	277	333	526	1296	0	0	0	0
2	183	218	281	340	536	1293	0	0	0	0
3	182	210	278	338	533	1296	0	0	0	0
4	178	215	276	331	522	1289	0	0	0	0
5	181	219	275	335	523	1288	0	0	0	0
6	182	213	279	337	539	1302	0	0	0	0
7	178	214	275	331	519	1286	0	0	0	0

BØV. ALBUMIN 20 PPM,650 PYRØ,170 CØL,80 SENS,30 MIN.

PEAK	AVERAGE TIME	STANDARD DEV.TIME	MAX. TIME	MIN. TIME	AVERAGE AREA	STANDARD DEV.AREA	AREA/ CØNCENTRATIØN
1	180.571	1.98806	183	178	3476.86	186.175	173.843
2	214.857	3.02372	219	210	5261.29	254.617	263.064
3	277.286	2.21467	281	275	4717.57	253.038	235.879
4	335	3.51188	340	331	3698.71	513.503	184.936
5	528.286	7.69663	539	519	345.857	190.703	17.2929
6	1292.86	5.61037	1302	1286	3345.14	277.332	167.257

*Retention times in one-hundredths of a minute

TABLE 3. CALIF FOR GLUCOSE, NORMALIZED CONDITIONS

CALIF 11:49 SYS2 03/24/71 WED

	PEAKS									
	1	2	3	4	5	6	7	8	9	10
RUNS										
1	173	205	267	331	532	1215	1224	1390	0	0
2	176	200	281	349	566	1283	1911	2101	0	0
3	180	209	282	349	563	1582	0	0	0	0
4	175	203	296	369	610	1106	1131	0	0	0

20 PPM GLUCØSE,PYRØLISIS 650,CØL,175,S-80

PEAK	AVERAGE TIME	STANDARD DEV.TIME	MAX. TIME	MIN. TIME	AVERAGE AREA	STANDARD DEV.AREA	AREA/ CØNCENTRATIØN
1	176	2.94392	180	173	8979.5	730.369	448.975
2	204.25	3.77492	209	200	1286.5	495.357	64.325
3	281.5	11.8462	296	267	3303.5	250.948	165.175
4	349.5	15.5242	369	331	1418.75	154.815	70.9375
5	567.75	32.0871	610	532	365	158.339	18.25
6	1296.5	203.818	1582	1106	170	36.6151	8.5
7	1066.5	791.532	1911	1131	110.75	82.4677	5.5375
8	872.75	1048.73	2101	1390	406.5	484.086	20.325

CP UNITS

TABLE 4. CALIF FOR OLEIC ACID, NORMALIZED CONDITIONS

CALIF 15:36 SYS2 03/26/71 FRI

RUNS	PEAKS 1	2	3	4	5	6	7	8	9	10
1	181	205	214	279	349	558	1412	2507	2632	2670
2	179	201	216	275	344	547	1382	1986	2364	0
3	181	204	216	283	354	568	1426	2112	0	0
4	181	203	218	280	351	562	1414	0	0	0
5	181	204	215	279	349	560	1420	0	0	0

5PPM NA ØLEATE,650 PYRØ,175 CØL,80 SENS,30 MIN.

PEAK	AVERAGE TIME	STANDARD DEV.TIME	MAX. TIME	MIN. TIME	AVERAGE AREA	STANDARD DEV.AREA	AREA/ CØNCENTRATIØN
1	180.6	.894427	181	179	5988.6	148.658	1197.72
2	203.4	1.51658	205	201	333.6	53.3507	66.72
3	215.8	1.48324	218	214	746.2	159.224	149.24
4	279.2	2.86356	283	275	15770	422.788	3154
5	349.4	3.64692	354	344	8499.8	223.922	1699.96
6	559	7.68115	568	547	3435.4	147.999	687.08
7	1410.8	17.0059	1426	1382	8073.8	1592.17	1614.76
8	1321	1221.12	2507	1986	806	1127.75	161.2
9	999.2	1371.49	2632	2364	109.6	151.376	21.92
10	534	1194.06	2670	2670	52.4	117.17	10.48

CP UNITS:

TABLE 6. ANALYSIS OF MIXED SOLUTIONS

	Present, ppm	Average Found, ppm	Standard Deviation, ppm
Solution 1			
Albumin	20	19.8	0.92
Glucose	0	-0.1	0.52
Oleic Acid	0	0	0.12
Solution 2			
Albumin	10	8.0	0.51
Glucose	10	9.3	0.20
Oleic Acid	0	0	0.06
Solution 3			
Albumin	20	18.2	2.17
Glucose	20	19.2	2.13
Oleic Acid	0	0	0.12
Solution 4			
Albumin	20	19.0	0.35
Glucose	10	8.7	1.20
Oleic Acid	0	-0.3	0.12
Solution 5			
Albumin	4	2.9	0.25
Glucose	10	10.8	0.56
Oleic Acid	5	5.2	0
Solution 6			
Albumin	10	8.3	1.33
Glucose	20	20.9	1.56
Oleic Acid	3	3.3	0.10

TABLE 7. TYPICAL PRINTOUT OF BAJA PROGRAM

	MG PER LITER				
RUN#	ALBUMIN	GLUCOSE	OLEIC	RESIDUAL	%FIT
1	9.69	22.47	3.17	117.449	98
2	7.12	20.88	3.4	343.97	95
3	8.04	19.44	3.3	140.639	97
AVERAGE	8.28	20.93	3.29		
ACTUAL	10	20	3		

	MG PER LITER				
RUN#	ALBUMIN	GLUCOSE	OLEIC	RESIDUAL	%FIT
1	19.14	9.3	.92	128.886	96
2	18.69	9.41	.99	149.194	96
3	19.52	9.59	.97	152.734	96
AVERAGE	19.12	9.43	.96		
ACTUAL	20	10	1		

CP

SECTION V
APPLICATION RESEARCH

The Concept of Multicomponent Pattern Recognition and Differentiation

The overall objective of this study was to investigate the applicability of a pyrographic method of analysis to the gross characterization and simultaneous measurement of organic pollutants present in water sources, and to evaluate potential uses of this technique in the field of water pollution control and enforcement of water quality standards.

Although identification of specific pollutants can be undertaken with specialized procedures developed for particular situations, it is not practical in terms of time and manpower to analyze for the wide variety of organic pollutants that may exist in a waterway. A gross characterization method is needed in routine monitoring for control of pollution and maintenance of water quality, as well as application in specialized situations such as tracing of particular wastes to their sources and studying the degradation rates of wastes in a waterway.

Surveillance of pollution, to be an effective tool for maintaining water quality, must provide answers to the following questions: What are the volumes of waste effluents discharged into a particular water system by all the waste discharges? and How much organic waste does each source contribute to the waterway? Such information should be obtainable by objective means, independent of information that might be available from records of interested parties.

To deal with the problem of waste-source identification and quantification of its contribution to overall pollution load of a waterway, a radically new conceptual approach was proposed. This concept is based on the theory of multicomponent pattern recognition and differentiation. It is postulated that the identity and quantity of matter of discrete composition can be defined by a pattern formed by all elements of its chemical compositions. The application of this theory to the pollution surveillance problem is based on the fact that each industry has a waste with an overall chemical composition distinctive to its operation. The uniqueness of such waste compositions offers a means for their characterization as separate entities, rather than as a collection of various chemical species. To take advantage of this consideration, an analytical methodology that can treat and characterize the sum of chemicals in an aqueous solution as a single and unique entity must be used. The method of quantiative pyrographic analysis has such a capability. Using this technique, it is possible

to define a pyrogram as a specific waste standard, and when a number of such are present in the solution, to determine each, both qualitatively and quantitatively.

Water Pollution Surveillance and Monitoring

An extensive field effort was carried out in the southeastern part of the United States with full cooperation of local industries to evaluate practical capabilities of pyrography as a tool for gross characterization and differentiation between various industrial waste effluents. The waste samples were obtained by EPA personnel in cooperation with responsible state water quality monitoring agencies. The industries supplied the samples with the understanding that they will be used solely for research and will not be considered as a monitoring of their facilities. The first task of this study was to develop pyrographic patterns or fingerprints for varied industrial operations and to establish the degree of differentiation possible between the same.

The second task was to determine experimentally the feasibility of qualitative and quantitative differentiation in a solution consisting of a number of different waste effluents.

The third task was to develop methodology that would permit source identification and quantitative determination of multiple wastes in the presence of natural organic water background.

Pyrographic Characterization of Various Industrial Wastes. Waste effluents for this study were supplied by 20 major industrial operations in Alabama, Florida, Georgia, Mississippi, and South Carolina, including: Hercules, Incorporated, Hattiesburg, Mississippi; Air Products and Chemicals, Incorporated, Escambia Plant, Pensacola, Florida; Merck and Co., Incorporated, Medicinal Chemical Plant, Albany, Georgia; Monsanto Company Plant, Pensacola, Florida; and Delta Airlines, Incorporated, Atlanta, Georgia. The industry samples included chemical, food, textile, paper and pulp, oil refinery, brewing, pharmaceutical, and aircraft maintenance.

Samples of industrial waste discharge were collected at the points of discharge into receiving waters and were preserved by freezing in dry ice. The collected samples were analyzed pyrographically under standard conditions.

The calibration constants for 19 industrial waste effluents (one plant reclaimed its waste, and could not technically be considered as a waste discharger) were examined with the object of determining the differences between pyrographic patterns. The data are reported in Table 8.

TABLE 8. PYROGRAPHIC FINGERPRINTS OF WASTE EFFLUENTS
(PEAK MAGNITUDE x 10^{-3})

Food and Beverage

Peak No.	Average Retention Time	Food-A	Food-B	Food-C	Brewing
1	1.9	67.9	22.5	342.1	248.5
2	2.2	2.1	1.4	29.5	39.4
3	3.3	13.3	31.6	147.0	129.9
4	4.0	5.9	12.0	144.6	110.8
5	6.5	0.7	2.8	21.2	15.8
6	14.0	3.8	8.4	61.0	54.4

Various Industrial

Peak No.	Average Retention Time	Paper and Pulp	Oil Refining	Pharmaceutical	Aircraft Maintenance
1	1.9	96.6	34.6	2320.7	237.7
2	2.2	4.5	2.2		17.6
3	3.3	32.9	46.5	115.7	324.6
4	4.0	25.0	20.9	87.8	122.9
5	6.5	5.1	6.2	19.5	7.6
6	14.0	29.0	16.8	60.5	25.4

Textiles

Peak No.	Average Retention Time	Textile A	Textile B	Textile C	Textile D	Textile E
1	1.9	607.0	669.6	2,289.5	1,229.0	681.5
2	2.2	110.9	83.9	555.2	328.4	102.2
3	3.3	576.5	293.4	3,213.5	2,050.0	363.1
4	4.0	569.2	152.8	2,364.0	1,571.0	228.2
5	6.5	95.4	279.0	392.8	210.1	36.5
6	14.0	156.1	117.9	1,252.0	565.4	171.5

Chemical Industrial

Peak No.	Average Retention Time	Chemical A	Chemical B	Chemical C	Chemical D	Chemical E	Chemical F
1	1.9	38.2	85.9	4008.0	49.6	11.7	45.2
2	2.2	4.2	7.2	328.0	5.0	2.4	2.3
3	3.3	84.3	75.1	330.5	42.7	8.7	32.6
4	4.0	39.4	35.4	1444.7	26.2	3.6	31.2
5	6.5	10.6	5.8	27.1	2.2	1.1	1.6
6	14.0	6.5	38.8	327.0	12.3	3.7	14.7

To permit qualitative interpretation of data, the intensities of peaks in the pyrogram of a given waste effluent were reduced to percent representation. Total intensity of a pyrogram was taken as 100 percent, and the magnitude of each peak was expressed as a fraction thereof. Such qualitative display of data for all samples examined is shown in Table 9.

It was found that the waste effluents from chemical plants produced significantly different pyrographic patterns. However, a degree of similarity was noted within the pyrographic patterns for the waste effluents of textile plants.

In the food and beverage group, brewing and Food "C" plants waste effluents produced pyrographic patterns that were quite similar. The waste effluents of the miscellaneous industrial group were different in all cases, both qualitatively and quantitatively.

Generally speaking, there appears to be sufficient differences in pyrographic patterns between industrial effluents of different types. It also appears that the majority of industrial effluents within one category could be differentiated. However, there are also some types of industries (e.g., textile and those that process natural products) in which differentiation between patterns of individual plant effluents within an industrial group will be difficult. Further increase in complexity of pyrographic patterns would be desirable to increase the differentiating power of this technique.

Analysis of Industrial Wastes in Mixed Solutions. To maintain water quality in a stream, the waste discharges from industries and municipalities must be controlled. The effective control of waste discharges can be implemented only by the monitoring of pollution source contributions. A program for such monitoring must recognize two aspects of water pollution: the volumes of waste effluents dishcharged from each source, and the waste load contributions of each source.

To obtain needed information for pollution surveillance, computer program BAJA was modified. The modified program, which is called BAJA-1, uses two types of inputs: (1) the calibration constants for each waste source (CALIF), and (2) the total organic content or mg C/l of each waste source. When a sample of an aqueous solution containing a number of different waste compositions is analyzed pyrographically, two sets of data are computed: (1) the organic waste load contribution of each waste source, and (2) the percent volumes of waste effluents present in a sample.

The capability of this program to generate necessary information was experimentally tested. In the initial test, samples of raw waste effluents were obtained from poultry, paper, and textile plants. Each sample was analyzed pyrographically, and calibration constants (CALIF's)

TABLE 9. QUALITATIVE ANALYSIS OF PYROGRAMS FOR VARIOUS INDUSTRIAL WASTE EFFLUENTS

	Total Counts (sum of all peaks)	Percent of Total Counts for each Peak					
		1	2	3	4	5	6
Chemical A	183067	21	2	46	22	6	4
Chemical B	248285	35	3	30	14	2	16
Chemical C	6.17×10^6	65	5	5	23	0	1
Chemical D	137956	36	4	31	19	2	9
Chemical E	31048	38	8	28	11	3	12
Chemical F	127672	35	2	26	24	1	12
Pharmaceutical	2.60×10^6	89	0	4	3	1	2
Textile A	1.915×10^6	32	6	30	19	5	8
Textile B	1.326×10^6	48	6	23	11	2	10
Textile C	1.007×10^7	23	6	32	23	4	12
Textile D	5.953×10^6	21	6	34	26	4	9
Textile E	1.583×10^6	43	6	23	14	2	11
Food A	93650	72	2	14	6	1	4
Food B	78759	29	2	40	15	4	11
Food C	745430	46	4	20	19	3	8
Brewing	598688	42	7	22	19	3	9
Paper and Pulp	193080	50	2	17	13	3	15
Oil Refining	127250	27	2	37	16	5	13
Aircraft Maintenance	735796	32	2	44	17	1	3

were obtained. The total organic content of each sample was determined by a gravimetric method. The CALIF's and the total organic content values were supplied to BAJA-1 program. Then mixtures of the three wastes were prepared in various concentrations and analyzed pyrographically. The results were computed by the BAJA-1 program. A typical printout is shown in Table 10.

As can be seen from this table, one test solution contained 1-percent waste effluent from a poultry plant, 0.1-percent waste effluent from a textile plant, and 0.5-percent waste effluent from a paper mill. The average values (determined and computed by the BAJA-1 program) which were found for the volumes of each waste present in the solution were: 1.02 percent for poultry, 0.15 percent for textiles, and 0.45 percent for the paper plant. Each waste effluent, of course, contained different loads of organic matter; Table 10 shows that the waste load contribution of each waste source is not necessarily proportional to the volumes in the solution.

In this case, the poultry waste contribution is 1.79 mg/liter of organic waste; the textile, 4.4 mg/liter; and the paper mill, 4.69 mg/liter. As a matter of fact, the textile waste, which constitutes only 6 percent of all waste volumes present in the solution, comprises nearly half of the organic waste load of the solution. Information of this type, obtained from a single pyrogram from one downstream sample of river water, could form a logical basis for pollution control enforcement action and could lead to the effective maintenance of water quality in the waterway.

Additional solutions analyzed included the mixtures of two textile waste effluents (Textile Processing and Textile Finishing) and one chemical waste effluent (Hercules, Inc.). The BAJA-1 program was supplied with respective CALIFS and TOC numbers, and the results were computed. Binary mixtures of Textile Processing and Textile Finishing also were included in this computation. They were considered to be ternary mixtures with Hercules, Inc., waste at zero concentration.

It was important to establish whether the absence of one or more of the waste effluents from a multiwaste calibrated system will interfere with computations for materials which were present. Nine mixtures of the following ternary waste compositions were prepared in the following ratios:

	Mixtures, volume %								
	1	2	3	4	5	6	7	8	9
Textile Processing	1	5	3	1	1	1	0.5	1	2
Textile Finishing	1	1	3	5	0.5	1	1	0.5	0.5
Hercules, Inc.	0	0	0	0	1	0.5	0.5	0.2	0.5

TABLE 10. ANALYSIS OF A THREE-COMPONENT MIXTURE OF INDUSTRIAL WASTES

BAJA-1

PERCENT OF EACH WASTE

RUN #	POULTRY	TEXTILE	PAPER
1	.77	.13	.51
2	1.08	.19	.43
3	1.44	.12	.47
4	.8	.17	.44
5	1.03	.16	.41
AVERAGE	1.02	0.15	0.45
PRESENT	1.0%	0.1%	0.5%

ORGANIC MATTER FROM EACH SOURCE
(MILLIGRAMS PER LITER)

	POULTRY	TEXTILE	PAPER
1	1.34	3.8	5.27
2	1.89	5.53	4.47
3	2.53	3.29	4.86
4	1.4	4.95	4.55
5	1.79	4.45	4.29
AVERAGE	1.79	4.4	4.69

The results reported in Table 11 indicate that qualitative and quantitative differentiation of the complex industrial wastes in solutions containing effluents from similar and dissimilar industrial operations has been achieved. It was further demonstrated that in a multicomponent calibrated system the absence of a given waste does not interfere with computations for wastes that are present. Specifically, the presence of the Hercules, Inc., waste CALIF and TOC values in the BAJA-1 program did not interfere with computations for Textile Processing and Textile Finishing concentrations in the solution containing only those wastes.

The completed experiments indicate that the theory of multicomponent pattern recognition and differentiation are applicable to the characterization and analysis of industrial wastes, and that pyrography provides the capability for qualitative and quantitative differentiation of mixtures of various industrial wastes.

Further increase in accuracy of analysis is desirable. The increase in pyrogram complexity will lead to more accurate determinations, and future research effort should be oriented in that direction.

Identification and Quantitative Determination of Industrial Waste Effluents in the Natural Waters. Application of the multicomponent pattern recognition and differentiation theory to the analysis of industrial wastes in mixed solutions using pyrographic methodology was demonstrated experimentally. The solutions analyzed were prepared in distilled water. In real-life situations, however, industrial wastes are found in the presence of natural organic background. The organic background of natural waters, in some cases, can exceed industrial waste contributions.

To test the performance of the system with such functional constraints, a number of industrial waste mixtures were prepared in water from the Oconee River, collected in the town of Athens, Georgia, and analyzed. The water analyzed pyrographically for organic background was found to contain:

	ppm	Approximate Organic C, mg/l
Proteins	1.22	0.6
Carbohydrates	7.47	3.0
Lipids	0.46	0.4
Total Natural Organics	9.15	4.0

Mixtures of two industrial wastes (Hercules, Inc., and Textile Finishing) were prepared in Oconee River water and analyzed pyrographically.

TABLE 11. ANALYSIS OF MIXED SOLUTION OF INDUSTRIAL WASTE EFFLUENTS

	Textile Processing	Textile Finishing	Hercules Inc.
Present	1.0	1.0	0
Found	0.84	0.9	-0.02
mg C/l	(0.68)	(2.79)	(0.03)
Present	5.0	1.0	0
Found	5.93	1.21	-0.08
mg C/l	(4.8)	(3.75)	(-0.16)
Present	1.0	5.0	0
Found	1.52	4.9	-0.06
mg C/l	(1.23)	(15.29)	(-0.13)
Present	3.0	3.0	0
Found	3.44	2.69	-0.09
mg C/l	(2.79)	(8.39)	(-0.18)
Present	1.0	0.5	1.0
Found	0.73	0.45	1.08
mg C/l	(0.59)	(1.39)	(2.05)
Present	1.0	1.0	0.5
Found	0.72	0.96	0.52
mg C/l	(0.58)	(2.99)	(0.98)
Present	0.5	1.0	0.5
Found	0.46	0.87	0.49
mg C/l	(0.38)	(2.72)	(0.93)
Present	2.0	0.5	0.5
Found	2.23	0.36	0.55
mg C/l	(1.8)	(1.11)	(1.06)
Present	1.0	0.5	0.2
Found	0.99	0.44	0.21
mg C/l	(0.8)	(1.36)	(0.4)

NOTE: Numbers referring to present are expressed in percent of specific waste present in solution. Mg C/l refers to actual organic load contribution of each waste.

The waste concentration (volume percent), waste contribution (as Organic C), and natural organic background of the water (also as Organic C) of analyzed solutions are as follows:

	Solution		
	1	2	3
Hercules, Inc.			
Percent Waste	1.0	0.5	1.0
Organic C, mg/l	1.9	1.0	1.9
Textile Finishing			
Percent Waste	1.0	1.0	0.5
Organic C, mg/l	3.1	3.1	1.6
Natural Background			
Organic C, mg/l	4.0	4.0	4.0

The solutions were analyzed pyrographically. The results were computed using the BAJA-2 program, which is a modification of the principal BAJA program and requires the following inputs: (1) CALIF for natural organic background of water, or CALIF of water sample collected upstream from waste-discharging sources; (2) CALIF's of industrial wastes; and (3) TOC's of industrial wastes.

The program defines, qualitatively and quantitatively, the character of natural organics and computes the percent volumes and the organic waste load contributions of industrial waste effluents.

The results of this experiment are reported in Table 12, and indicate that the analysis of mixed industrial waste effluents in natural waters is possible.

Waste Treatment Control and Optimization

Lagooning is a principal means for industrial waste treatment in the southeast. Simple holding ponds are most commonly used. More advanced facilities comprise a series of anaerobic and aerobic ponds. Mechanical aeration supplements the oxygen in some cases. During the period of this program, a broad cross section of industrial waste treatment operations in five southeastern states were examined. The plants included chemical, food, textile, paper and pump, oil refining, brewery, pharmaceutical, and service industries. Waste water samples were taken at 24 industrial operations; of those, 13 had waste treatment facilities and 11 did not. Of the 13 plants with waste treatment facilities, 11 used the lagooning mode of treatment. One plant reclaimed its waste and one used the activated-sludge process.

TABLE 12. ANALYSIS OF MIXED INDUSTRIAL WASTES IN NATURAL WATER MATRIX

Natural Background

Proteins	1.22 mg/l
Carbohydrates	7.47 mg/l
Lipids	.46 mg/l

Volume Percent From Each Source

Source	Run 1	2	3	4	5	Average	Actual
Hercules, Inc.	.48	.42	.44	.46	.5	.46	0.5
Textile Finishing	.66	.66	.87	.91	.98	.86	1.0

Concentration of Organic Carbon From Each Source
Mg/l

Source	Run 1	2	3	4	5	Average
Hercules, Inc.	.91	.8	.86	.87	.95	.87
Textile Finishing	2.85	2.67	2.7	2.82	3.84	2.67

Natural Background

Proteins	1.22 mg/l
Carbohydrates	7.47 mg/l
Lipids	.46 mg/l

Volume Percent From Each Source

Source	Run 1	2	3	4	5	Average	Actual
Hercules, Inc.	.92	1	.95	.97	1	.97	1.0
Textile Finishing	.67	.8	.91	.84	.87	.82	1.0

Concentration of Organic Carbon From Each Source
Mg/l

Source	Run 1	2	3	4	5	Average
Hercules, Inc.	1.75	1.9	1.8	1.84	1.9	1.84
Textile Finishing	2.0	2.48	2.82	2.6	2.7	2.54

The principal function of aerobic and anaerobic lagoons is to reduce the organic waste load in the industrial effluent. Efficiencies of such treatment operations are judged by the amount of organic matter removed from the stream. Normally, an indirect measure of organic content is used, as reflected in the BOD test. Bersem and Ryckman (Ref. 5) developed a failure scale for lagoons based on BOD and suspended solids in the effluent. The first degree of failure occurs, according to this scale, when the BOD exceeds 20 mg/l, and suspended solids exceed 25 mg/l. The second degree of failure occurs at BOD values above 30 mg/l and solids values about 35 mg/l. The third-degree failure occurs when BOD exceeds 40 mg/l and suspended solids exceed 45 mg/l.

Investigation of the potential use of the pyrographic method of analysis for the determination of efficiencies of waste treatment processes, leading to optimization of these operations, was one of the tasks of this program. A modern industrial waste treatment facility, typical for the region and built utilizing standard sanitary engineering design, was selected for the study. The facility comprised one anaerobic and three aerobic ponds. Its process capacity was 3.8 million l (1,000,000 gallons) of water per day.

The initial study on efficiencies of anaerobic and aerobic treatment processes was conducted in June 1969, utilizing the Mark 1 pyrographic analyzer. Using pyrographic data, the BOD equivalents (Ref. 14) were determined for the raw waste and the effluents from the anaerobic and three aerobic ponds. The results shown in Table 13 indicate that the principal reduction of BOD values was taking place in the anaerobic pond. The aerobic ponds, which constitute more than 80 percent of the physical plant of the waste treatment facility, were highly inefficient as far as reduction of the organic waste load was concerned. Specifically, the organic load of the incoming waste was reduced by 1261 mg/l BOD equivalent in the anaerobic ponds, while the three subsequent aerobic ponds contributed to an organic load reduction of only 223 mg/l BOD equivalent. Furthermore, the reduction of organic matter in the second and third aerobic ponds (which constituted more than 60 percent of the physical plant of this waste facility) amounted to only 44 mg/l BOD equivalent. From this, it appeared that the operation of the treatment facility could be substantially improved. Examination of the literature indicated that other workers have reported similar results for operation of anaerobic and aerobic lagoons. Sollo (Ref. 15) reported on the operation of anaerobic and aerobic waste treatment lagoons for the meat-packing industry. His results were similar to those observed in this study. He reported that waste effluent containing 1060 mg/l BOD was reduced by anaerobic treatment to 163 mg/l BOD or approximately by 85 percent of the organic load. The aerobic pond further reduced the organic load to 58 mg/l BOD. A recent EPA publication (Ref. 5) reports that these results are typical of the data reported for other meat-packing

plants. From this, it is apparent that current design of lagooning type of waste treatment facilities is far from being optimized, and a report by Bersen and Ryckman (Ref. 4) concludes that "continued use of oxidation ponds as presently designed and operated will not enhance, restore, or maintain the quality of the receiving stream."

TABLE 13. REDUCTION OF ORGANIC LOAD

	BOD Equivalent*, mg/l
Poultry Co. Untreated Waste	1559
Anaerobic Pond	298
First Aerobic Pond	119
Second Aerobic Pond	76
Third Aerobic Pond	85
Waste Effluent	75
Creek 0.161 km (0.1 mile) Downstream From Discharge	9
Creek Upstream From Discharge	7

*Calculated according to a method described in Ref. 14

Recently, Middleton and Bunch (Ref. 3) expressed serious doubt as to the continued use of oxidation ponds in the future. They believe that the quality of effluents from oxidation ponds might not be adequate. Algae seems to be responsible for both high BOD and high suspended solids in the effluent. To test this suggestion, a differential procedure for selective analysis for biomass-related organics and waste-related organic materials in a waste stream was devised utilizing pyrographic methodology. The conventional techniques for measuring organic load in water (i.e., BOD, COD, TOC) report nondiscriminating values, reflecting the total organic load including waste materials and naturally regenerated organic matter. Consequently, they shed very little light on the nature and the intensities of heterotrophic and autotrophic processes which normally take place in conventional lagoon waste treatment units.

The pyrographic method of analysis, however, has a differentiating capability, and was used for the analysis of waste treatment streams in terms of concentration of organic poultry waste and concentration of biologically produced biomass, reflecting the intensities of autotrophic and heterotrophic processes.

The chemical nature of raw waste discharged and the nature of the treated waste effluent were different both in qualitative and quantitative terms, and such differences were reflected in pyrograms of respective chemical compositions. Because the waste biotransformation took place in all the units of the treatment facility, it was reasonable to expect that both starting and product materials were present in various units of the process, and that their concentration ratios reflect the efficiency of the process unit.

The information recorded on a pyrogram reflects both the qualitative and quantitative composition of the sample. We had available pyrograms for process input matter (raw waste) and process output matter (treated effluent), the organic composition of which derives principally from biomass.

The pyrographic data for each unit of the waste treatment plant can be and was examined mathematically in terms of two such compositions. Calibration data reflected in the CALIF for raw waste and the CALIF for treated waste effluent were reduced by percent representations, and the pyrographic information obtained for each unit of the operation was subjected to computer analysis BAJA.

The results reported in Table 14 support Middleton and Bunch's (Ref. 3) proposition. It does, indeed, appear that oxidation ponds contribute very little to organic load reduction, but rather recycle organic matter of incoming waste into organic matter of biomass, by means of photosynthetic reaction.

TABLE 14. DEGRADATION OF ORGANICS IN POULTRY WASTE

Sample Source	Poultry Waste	Biomass	Total
Raw waste effluent	1080	75	1156
Anaerobic pond*	3221*	-859*	
First aerobic pond	60	336	396
Second aerobic pond	65	89	154
Third aerobic pond	1	247	248

*Sample not representative, contains surface foam

Organic Composition of Natural Waters

In natural unpolluted waters, the biomass exists in a near steady-state condition with water-carried organics. These materials, derived from the decomposition of biomass and excretion from living organisms, exist in gaseous, liquid, and solid physical forms. It is estimated that approximately 10 percent of the organics naturally found in water have been chemically classified. This 10-percent value probably relates to the principal organic compounds present, and does not take into account thousands of additional organic compounds present at trace and subtrace levels. In spite of the great diversity of organic materials present in natural waters, it is generally agreed that such materials derived from natural processes belong, to a large extent, to three classes: carbohydrates, nitrogenous matter, and lipids (Ref. 16). However, the absolute values for the concentration of organic materials of each class, as reported by various authors, vary to a considerable degree.

Extensive data on organic composition in inland fresh lakes were collected by Birge and Juday (Ref. 6) almost half a century ago. The data showed that principal organic compounds of the natural waters were hydrocarbons, proteins, and lipids. Using this model as an example, unpolluted waters of the southeast were analyzed pyrographically. Included in the study were stream, river, reservoir, and swamp water sources in the southeast region of the United States. This region is well-suited for such an investigation because it is not highly industrialized or populated and still contains many unpolluted water sources. Those waters also represent a variety of hydrochemical types:

1. Coweeta Hydrological Model

   The Coweeta Hydrological Station is maintained by the U.S. Department of Agriculture in the Appalachian Mountains on the border of North Carolina and Georgia. The water source has a low mineral and organic content. An extensive hydrological record is available for this watershed.

2. Piedmont Region Streams

   Near Athens, Georgia, are a number of swift moving streams, rivers, and reservoirs. Alcovy River and Clark Hill Reservoir were used as water sources in this study.

3. Coast Plains Rivers

   The U.S. Department of Agriculture, Hydrological Model, Tifton, Georgia, was used in this study. The watershed comprises the Little River and its tributaries. The tributaries flow through cultivated lands, and carry some degree of agricultural pollution. However, water from the tributaries filters through swamps before it reaches the Little River.

4. Coastal Swamps

   Two principal swamps of the area are the Everglades in Florida, and the Okefenokee in Georgia. Culturally unpolluted waters of swamps contain large quantities of organic matter.

The hydrochemical characterization of natural waters, in terms of the three principal classes (carbohydrates, nitrogenous matter, and lipids), was attempted using pyrographic methodology. The pyrogram of natural water sample, of course, reflects the chemical nature of organic compounds present in it at a detectable concentration level. The problem is to divide the pyrographic information into the three categories. To do so, calibration constants for these groupings are needed.

A selection of model materials for calibration was based on the natural water model. Sufficient quantities of biomass-derived carbohydrates, proteins, and lipids were obtained from water samples collected in a pond undergoing algae bloom. The proteinaceous materials present were

separated from the water matrix by the ammonium sulfate precipitation method, while the lipids were extracted by methane/chloroform method. The soluble fraction remaining in the sample was classified as carbohydrates.

Each of the separated materials was analyzed pyrographically and CALIF's (i.e., a series of calibration constants) were obtained for them. The CALIF's for carbohydrates, proteinaceous matter, and lipids derived from natural water bodies were then compared with CALIF's obtained for a number of compounds of each class. The CALIF's of known materials, which did approximate the CALIF's of naturally derived compositions most closely, were used as calibration constants in the BAJA program. Glucose was selected as a standard for carbohydrates, albumin as a standard for proteins, and oleic acid as a standard for fatty materials.

Using derivative calibration constants, pyrographic data from various unpolluted water samples were examined in terms of carbohydrates, proteinaceous matter, and lipids. The comparison of data obtained by Birge and Juday for Wisconsin lakes and data obtained pyrographically for unpolluted waters of the southeast are shown in Table 15.

It appears that, with the exception of low pH, dark-colored waters of Georgia coastal swamps, the similarity between water types reported by Birge and Juday (Ref. 6), and water studied under this program does exist.

TABLE 15. ORGANIC COMPOSITION IN NATURAL WATERS

	Proteins		Carbohydrates		Lipids		Total Organic Content
	mg/l	percent	mg/l	percent	mg/l	percent	
Coweeta Watershed - Wisconsin Lakes							
Coweeta Watershed	1.4	38	2.2	59	0.1	3	3.7
Wisconsin Lakes Birge and Juday, Class 1	1.0	29	2.6	69	0.1	3	3.7
Piedmont Sources - Wisconsin Lakes							
Alcovy River	1.6	31	3.4	65	0.2	4	5.2
Clark Hill Reservoir	1.0	17	4.7	81	0.1	2	5.8
Wisconsin Lakes Birge and Juday, Class 1	1.0	29	2.6	69	0.1	3	3.7
Coastal Plains Rivers - Wisconsin Lakes							
Little River	5.1	29	11.7	67	0.7	4	17.5
Mills Creek	4.8	29	11.2	67	0.6	4	16.6
Wisconsin Lakes Birge and Juday, Class 3	3.8	17.2	18.7	82.2	0.2	0.8	22.7
Moving Waters, Everglades - Wisconsin Lakes							
Everglades, Moving Streams	3.7	15	19.7	80	1.3	5	24.7
Wisconsin Lakes Birge and Juday, Class 3	3.8	17.2	18.7	82.2	0.2	0.8	22.7
Still Ponds, Everglades - Wisconsin Lakes							
Everglades, ponds	3.9	12	27.9	84	1.6	5	33.4
Wisconsin Lakes Birge and Juday, Class 4	4.9	14.5	28.6	85.1	0.2	0.4	33.6

SECTION VI

ACKNOWLEDGEMENTS

We express appreciation to Dr. H. P. Nicholson, Project Officer, Southeast Environmental Research Laboratory, Athens, Georgia, for his guidance on this program, and to Mr. W. Taylor, EPA, Athens, Georgia; and from Rocketdyne, Dr. N. Mann, Mr. L. H. Groeger, and Dr. B. L. Tuffly for their direct contributions to this program.

SECTION VII

REFERENCES

1. McKee, J. E. and H. W. Wolf: Water Quality Criteria, 2nd. Ed., Publ. No. 3A, State Water Quality Control Board, Sacramento, California (1963).

2. Ballinger, D. G.: "Decisions to be Made in the Use of Automatic Water Quality Monitors," International Symposium on Identification and Measurements of Environmental Pollutants, Campbell Printing, Ottawa, Canada, 158 (1971).

3. Middleton, F. M. and R. L. Bunch: "Challenge for Waste Water Lagoons," Proc. 2nd Int. Symp. for Waste Treatment Lagoons, Kansas City, Mo., 364-366, June 1970.

4. Bersem, G. M. and D. W. Ryckman: "Evaluation of Lagoon Performance in Light of 1965 Water Quality Act," Proc. 2nd Int. Symp. for Waste Treatment Lagoons, Kansas City, Mo., 63-80, June 1970.

5. "Waste Treatment Lagoons - State of the Art," Enviornmental Protection Agency Project #17090 EXH-07/7, Superintendent of Documents, U. S. Government Printing Office, Washington, D.C. 20402.

6. Birge, E. D. and C. Juday: Ecol. Monographs 4, No. 4, 63-80, June 1970.

7. Lysyj, I.: Pyrographic Gross Characterization of Water Contaminants, Final Report, FWPCA Contract 14-12-424, Report R-7991, Rocketdyne Division, Rockwell International, Canoga Park, California.

8. Greenwood, C. T., J. H. Knox, and E. Milne: Chem. Ind., London, 1879-1880 (1961).

9. Winter, L. N. and J. Albro: J. Gas Chromatogr. 2, 1-6 (1964).

10. Reiner, E.: Nature, 206, 1272-1276 (1965).

11. Lysyj, I., K. H. Nelson, and S. R. Webb: Water Res. 4, 157 (1970).

12. Lysyj, I.: "Instrumental Techniques for the Identification of Pollutants," Organic Matter in Natural Water, University of Alaska (1970).

13. Lysyj, I. and P. R. Newton: "Use of Porous Glass for Gas Chromatographic Separations," Anal. Chem. 36, 3514 (1964).

14. Lysyj, I., R. H. Nelson, and H. Snell: "Rapid Instrumental Measurement of Organic Load in Waste Waters," J. Water Poll. Control Fed., 41, 831 (1968).

15. Sollo, F. M.: "Pond Treatment of Meat Packing Plant Wastes," Proc. 15th Ind. Waste Control, Purdue University, 386-391 (1960).

16. Hood, D. W.: Organic Matter In Natural Waters, University of Alaska (1970).

SECTION VIII

PUBLICATIONS

1. Lysyj, I. and P. R. Newton: Hydrochemical Applications of Pyrography, Report R-9086, Rocketdyne Division, Rockwell International, Canoga Park, California, December 1972.

2. Lysyj, I. and P. R. Newton: "Multicomponent Pattern Recognition and Differentiation Method: Analysis for Oil in Natural Waters," Anal. Chem. 44, 2385-2387 (1972).

3. Lysyj, I., P. R. Newton, and W. J. Taylor: "Instrumentation-Computer System for Analysis of Multicomponent Organic Mixtures," Anal. Chem. 43, 1271-1281 (1971).

4. Lysyj, I.: "A Pyrographic Instrument for Analysis of Water Pollutants," Amer. Lab. 7, 23-25 (1971).

5. Lysyj, I.: "Pyrography - A New Hydrochemical Tool," International Symposium on Identification and Measurement of Environmental Pollutants, Campbell Printing, Ottawa, Canada (1971).

SECTION IX

APPENDIX

Computer Programs

This appendix discusses computer programs developed under this program, presents flow diagrams and typical printouts of the programs, and gives an example of computer and long-hand calculations of program BAJA. All programs are in written BASIC language.

Computations

A computer program for handling raw data and two principal programs for data processing and computation were developed. Program DAY is used for handling and organization of raw data. Program CALIF is used for computation of calibration constants. Program BAJA calculates the actual concentrations of individual components present in the aqueous solution by solving a series of linear equations in the least-squares mode. Two modifications of the principal program BAJA were also developed. BAJA-1 computes, in addition to volume percent of organic compositions present, the contributions of each defined organic composition in terms of mg C/liter. The BAJA-2 program, in addition to all functions of BAJA-1 program, compensates for the contributions of the natural organic background in the analysed sample.

DAY Program

The program DAY handles raw data. In the actual operation of the instrument, the pyrographic readout in digital form is typed on a roll of paper and punched on a paper tape in ASCII, eight-level code. Each set of information appears on two lines: one indicating retention time, the second, peak intensity. The retention time number is in hundredths of a minute and is identified by the number 8 appearing on the same line. Number 6, appearing after the time measurement, indicates termination of the analysis. Numbers between 0 and 5, appearing after a number, indicate that it is peak intensity. Those numbers are powers of 10 by which the peak intensity is multiplied. This is shown in Table A-1. After dialing a time-sharing computer center, information from paper tape is transmitted as audio-frequencies via commercial telephone lines and saved in program DAY in nonedited form. The data are then edited by assigning line numbers to each line. The saved, edited file DAY is then ready to be used for computing results in program BAJA.

The typical printout of nonedited and edited programs DAY and associated computer commands are also shown in Table A-1.

TABLE A-1. PRINTOUT OF PYROGRAPHIC DATA COMPUTATIONS

```
NEW:DAY

READY

0171,8
2058,1
0248.8
6791,0
0338,8
1901,1
0515,8
1882,0   †
0582,8
4089,0
0731,8
1446,0
1500,6
0000,0

KEY

READY
SAV*

READY
EDIT ASSIGN

READY
LIST

DAY        14:42  FNE  10/20/70 TUES

100 0171,8
110 2058,1
120 0248,8
130 6791,0
140 0338,8
150 1901,1
160 0515,8
170 1882,0
180 0582,8
190 4089,0
200 0731,8
210 1446,0
220 1500,6
230 0000,0

READY
```

†Data are inputted from data tape.
Underlined sections are entered from the terminal; all other material is from computer.

The commands are for system 2, Fulton National Bank, Atlanta.

CALIF Program

The CALIF program reduces the raw data produced by a series of pyrographic runs on a given standard solution. The printout lists retention times, average retention time, and standard deviation of retention time for each run. It also provides maximum and minimum retention times for each peak observed in a series of calibration runs. The maximum and minimum retention times form windows, which are used by the computer for the scanning and selecting of peaks in a subsequent analysis of mixed solutions. The CALIF printout also provides the average area for the calibration peaks and standard deviation of the same. Finally, the area per unit concentration in mg/liter is calculated and printed out. This is the proportionality constant used in subsequent calculation of the mixed solutions. CALIF also provides noise-filtering capabilities by rejecting peaks below a certain predetermined intensity.

There are two inputs into the CALIF program. Input DATD is edited data (in similar fashion to program DAY) received by the computer from a pyrograph through the telemetering system and is organized by assigning line numbers. The input DATD also carries information that is entered in table headings such as column, carrier gas, and sensitivity setting.

Line 200 in CALIF, the second input, indicates the concentration of the calibrating solution.

A flow diagram of program CALIF is shown in Fig. A-1. The figure is divided into sections for ease of explanation of its various functions:

- Section A. The headings are printed and the concentration is read into the program.
- Section B. The data are read into the program from the data file. It is examined to see if it is valid.
- Section C. The peak retention times are examined.
- Section D. The peak times and areas are averaged, and squared for later standard deviation calculations.
- Section E. Input data are examined to test for the end of a run or the end of the series of runs.
- Section F. The standard deviations are calculated and all results are printed out.

A listing of CALIF is given in Table A-2.

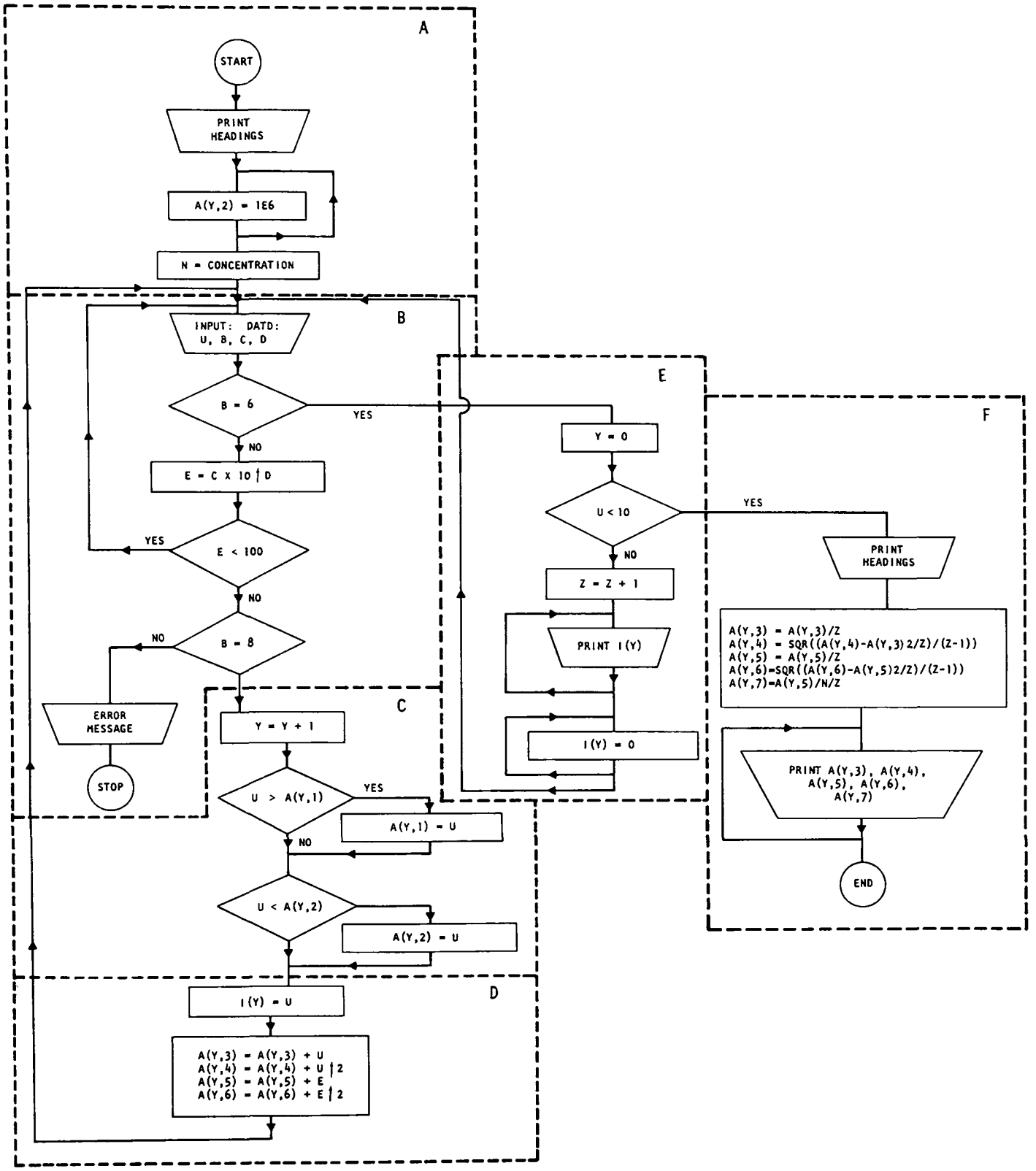

Figure A-1. Flow Diagram of CALIF

TABLE A-2. COMPUTER PROGRAM CALIF

CALIF

```
50 DIMI(50)
100 REM---SET N=TØ CØNCENTRATIØN STATEMENT 200
110 DIM A(50,50)
120 PRINTTAB(20);"PEAKS"
130 PRINTTAB(7)"1";TAB(13)"2";TAB(19)"3";TAB(25)"4";TAB(31)"5";
140 PRINTTAB(37)"6";TAB(43)"7";TAB(49)"8";TAB(55)"9";TAB(61)"10"
150 PRINT"RUNS"
160 INPUT:DATD:A$
170 FØR I=1TØ 50
180 LET A(I,2)=10↑6
190 NEXT I
200 LET N=100
210 INPUT:DATD:U,B,C,D
220 IF B=6 THEN 280
230 LET E=C*10↑D
240 IF E<100 THEN 210
250 IF B=8 THEN 380
260 PRINT"HA HA"
270 STØP
280 LET Y=0
290 IF U<10 THEN 510
300 LET Z=Z+1
310 REM --PRINT DATA FØR EACH PEAK
320 PRINTZ;TAB(6)I(1);TAB(12)I(2);TAB(18)I(3);TAB(24)I(4);TAB(30)I(5);
330 PRINT TAB(36)I(6);TAB(42)I(7);TAB(48)I(8);TAB(54)I(9)
340 FØR X=1TØ10
350 LET I(X)=0
360 NEXTX
370 GØ TØ 210
380 LET Y=Y+1
390 IF U>A(Y,1) THEN 420
400 IF U<A(Y,2) THEN 440
410 GØTØ450
420 LET A(Y,1)=U
430 GØTØ 400
440 LET A(Y,2)=U
450 LET I(Y)=U
460 LET A(Y,3)=A(Y,3)+U
470 LET A(Y,4)=A(Y,4)+U↑2
480 LET A(Y,5)=A(Y,5)+E
490 LET A(Y,6)=A(Y,6)+E↑2
```

TABLE A-2. (Concluded)

```
500 GØTØ210
510 PRINT TAB(3)AS
520 FØR I=1TØ72
530 PRINT"=";
540 NEXT I
550 PRINT
560 PRINT"PEAK";TAB(7)"AVERAGE";TAB(18)"STANDARD";TAB(29)"MAX.";TAB(34);
570 PRINT"MIN.";TAB(39)"AVERAGE";TAB(49)"STANDARD";TAB(61)"AREA/"
580 PRINTTAB(8)"TIME";TAB(18)"DEV.TIME";TAB(29)"TIME";TAB(34)"TIME";
590 PRINTTAB(40)"AREA";TAB(49)"DEV.AREA";TAB(58)"CØNCENTRATIØN"
610 FØR Y=1TØ10
620 IF A(Y,1)=0 THEN670
630 PRINTY;TAB(7)A(Y,3)/Z;TAB(18)SQR((A(Y,4)-A(Y,3)↑2/Z)/(Z-1));
640 PRINTTAB(29)A(Y,1);TAB(34)A(Y,2);TAB(39)A(Y,5)/Z;TAB(50);
650 PRINTSQR((A(Y,6)-A(Y,5)↑2/Z)/(Z-1));TAB(61)A(Y,5)/N/Z
660 NEXTY
670 END
```

BAJA Program

BAJA calculates the actual concentrations of individual organic components present in the aqueous solution. For this, a mathematical model is used that relates all pyrographic peaks to the concentration of each separate component. It computes estimates of the concentrations using a least-squares criterion.

There are four inputs into BAJA: (1) File DAY described above is edited data received by a computer from a pyrograph over the telemetering system. (2) Input WINDOW gives the dimensions of the windows as determined by the CALIF for extraction of valid pyrographic information. Each window consists of two numerals, representing a lower and higher limit for computation scanning. The numerals are expressed in hundredths of a minute (Table A-3). (3) Input DATA, lines 110, 111, and 112, lists the number of the peaks to be used in computation, the number of components to be solved, and calibration constants for each peak of each component. (4) Input PRINT/ lines 130, and 155, provides identification of the analysis number and the names of the components analyzed as a table heading.

TABLE A-3. INPUT WINDOW

100	170,190
200	200,220
300	250,290
400	330,360
500	540,560
600	1200,1400

A flow diagram of BAJA is given in Fig. A-2. The diagram is divided into sections for ease of explanation:

Section A. The number of peaks and components present are read into the programs. The calibration values are also read in.

Section B. The cross multiplication is performed for equations listed on page 14.

Section C. The window limits are introduced.

Section D. The experimental data from file DAY are read in. The data are examined for validity and sorted to the proper slots.

Section E. The remaining calculations are performed for equations listed on page 14. The data are fed into a file.

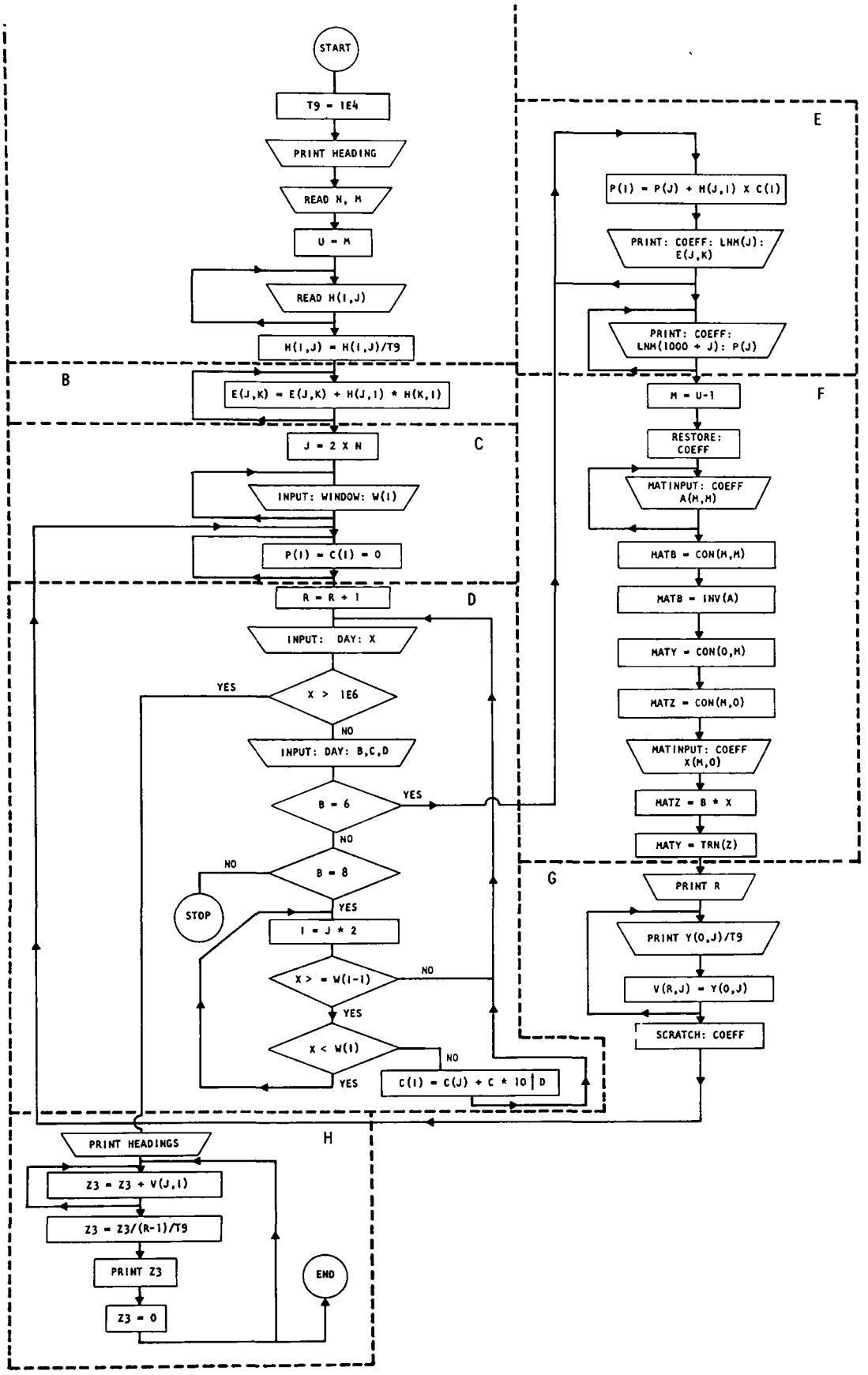

Figure A-2. Flow Diagram of BAJA

Section F. The DATA from the file are read into a pair of matrixes that are then solved for the unknown concentrations.

Section G. The results from each individual run are printed. The data are saved for later averaging.

Section H. The averages are computed and printed.

A listing of BAJA is given in Table A-4.

TABLE A-4. COMPUTER PROGRAM BAJA

BAJA

```
1 DIM C(10)
90 INPUT:DAY:A$
95 PRINTTAB(5)A$
100 DIM G(15),S(15),E(10,10),V(30,30),Y(10,10),W(30),H(15,15)
110 DATA 6,3,174,263,236,185,17,167,
111 DATA 449,64,165,71,18,9,
112 DATA 1198,216,3154, 1699,687,1615
125 PRINT TAB(30) "MG PER LITER"
126PRINT
130 PRINT "SAMPLE";TAB(12)"ALBUMIN";TAB(26) "GLUCØSE";
135 PRINT TAB(39)"ØLEIC";TAB(52)"%FIT"
160READN,M
170 LET U=M
180REMN=#ØFPEAKS,M=#ØFCØMPØNENTS
190FØRJ=1TØM
200FØRI=1TØN
210READH(J,I)
220NEXTI
230NEXTJ
240FØRJ=1TØM
250FØRK=1TØM
260FØRI=1TØN
270 LET E(J,K)=E(J,K)+H(J,I)*H(K,I)
280NEXTI
290NEXTK
300NEXTJ
310LETJ=2*N
320 FØRI=1TØJ
330 INPUT:WINDØW:W(I)
340 NEXT I
350 FØR I=1TØN
360 LET C(I)=0
370 NEXT I
380REM"R"WILLBEUSEDTØKEEPTRACKØFRUNS
390 LET R=R+1
400INPUT:DAY:X
410IFX>1E6THEN1050
420INPUT:DAY:B,C,D
430 IFB=6THEN560
440IFB=8THEN470
450PRINT"INCØRECT PRESENTATIØN ØF DATA"
460STØP
```

TABLE A-4. (Continued)

```
470FØRJ=1TØN
480 LET I=J*2
490IFX=>W(I-1)THEN510
500GØTØ400
510IFX>W(I)THEN540
520 LET C(J)=C(J)+C*10↑D
530GØTØ400
540NEXTJ
550GØTØ400
560FØRJ=1TØU
570FØRI=1TØN
580LETP(J)=P(J)+H(J,I)*C(I)
590NEXTI
600NEXTJ
610FØRJ=1TØU
620FØRK=1TØU
630PRINT:CØEFF:LNM(J);E(J,K)
640NEXTK
650NEXTJ
660FØRJ=1TØU
670PRINT:CØEFF:LNM(1000+J);P(J)
680NEXTJ
690LETM=U
700RESTØRE:CØEFF:
710MATINPUT:CØEFF:A(M,M)
720MATB=CØN(M,M)
730MATB=INV(A)
740MATY=CØN(1,M)
750MATZ=CØN(M,1)
760MATINPUT:CØEFF:X(M,1)
770MATZ=B*X
780MATY=TRN(Z)
790PRINTR;
800 FØR J=0TØU-1
810LETV(R,J)=Y(1,J+1)
820LETG(J)=Y(1,J+1)
830LETY(1,J+1)=(INT((100*Y(1,J+1))+.5))/100
840PRINTTAB(13*(J+1))Y(1,J+1);
850LETG(J)=Y(1,J+1)
860 NEXT J
870 FØR J=1 TØ N
880 FØR I=1TØ U
890 LET T=T+G(I-1)*H(I,J)
900 NEXT I
910 LET Z6=Z6+ABS(T-C(J))
920 LET Z7=Z7+C(J)
930 LET Z5=Z5+(C(J)-T)↑2
940 LET T=0
950 NEXT J
```

TABLE A-4. (Concluded)

```
960 LET Z5=(SQR(Z5))/(N-M)
970 LET Z6=INT(100*(1-(Z6/Z7)))
980PRINTTAB(13*(U+1))Z6
990 LET Z5=Z6=Z7=0
1000SCRATCH:CØEFF:
1010FØRJ=1TØU
1020 LET P(J)=0
1030NEXTJ
1040GØTØ350
1050 FØR J=1 TØ 70
1060PRINT"=";
1070 NEXT J
1080PRINT
1090PRINT"AVERAGE";
1100FØRI=0TØU-1
1110FØRJ=1TØR
1120 LET Z3=Z3+V(J,I)
1130NEXTJ
1140PRINTTAB(12*(I+1))((INT((100*Z3/(R-1))+.5)))/100;
1150 LET Z3=0
1160NEXTI
1170 END
```

BAJA-1 Program

To deal with problems of characterization and quantitative determination of waste effluents in natural waters, program BAJA had to be modified. In addition to information on the volume of waste discharged, data on the organic load contribution of specific wastes are needed for effective water pollution surveillance.

Basically, BAJA-1 program determines and computes volume percentages of individual industrial wastes present in the sample and also provides information on organic load contributions of each waste. To calibrate and program BAJA-1 system, two analyses on collected waste effluents from various industrial discharges are performed: pyrographic patterns of the waste (CALIF) are developed and total organic content of the sample is determined. In the actual operation of the pollution surveillance system, calibration constants of various industrial wastes are determined from an analysis of samples of waste effluents collected at discharge points of the respective industries. The samples are analyzed pyrographically and a set of calibration patterns are developed for each waste source. In addition to pyrographic analysis, TOC values are obtained for each sample. The pyrographic data are used for identification of waste sources and computation of volume percent of each waste in a solution. By combining this information with TOC calibration inputs, contributions of each waste source to a common waterway are computed in terms of mg C/l.

In addition, this program has a capability for using weighted averages for the individual peaks. The peaks can be assigned weights from 1 to 10, with more reliable peaks having a higher weight. The program requires the following inputs:

1. Number of peaks to be used in computation, number of compositions to be differentiated, and calibration constants for each peak. This information is entered in lines 180, 190, 200, and 210.

2. The weights for the individual peaks are entered in line 220.

3. The organic load is calculated on the basis of a calibration done at the time the standard sample is taken. The organic load value is entered on line 230 in the units of mg C/liter.

4. The headings for pollution source are entered on line 270 and 275. All other parameters are the same as in the BAJA program.

The flow diagram of the program is shown in Fig. A-3. To explain various operations of this program, it is divided into the following sections:

Section A. The constants for thepeaks of each organic composition are read into the program.

Section B. The constants are weighted in accordance with assigned weighing factors.

Section C. The cross multiplication and summing of the constants are performed for equations listed on page 14.

Section D. The acceptable limits of the peaks are read into the program.

Section E. The experimental peaks (from DAY input) are examined for validity. If valid they are sorted into the proper slots.

Section F. This section is a repetition of Section B. This time the experimentally obtained peaks are weighted instead of the calibration constants.

Section G. In this section the remaining mathematics from equations on page 14 are performed to obtain the coefficients for the right-hand side of the equations.

Section H. The coefficients are read into the data file for easy handling and transfer of numbers.

Section I. The coefficients are read back from the data file into a set of matrixes, which are then solved.

Section J. The solution of the equation is obtained from the matrix, and the results are printed out.

Section K. The average for a series of analyses is computed.

Section L. The calculations for organic content of the sample (MgC/l) are performed and printed out.

A listing of the BAJA-1 program is shown in Table A-5.

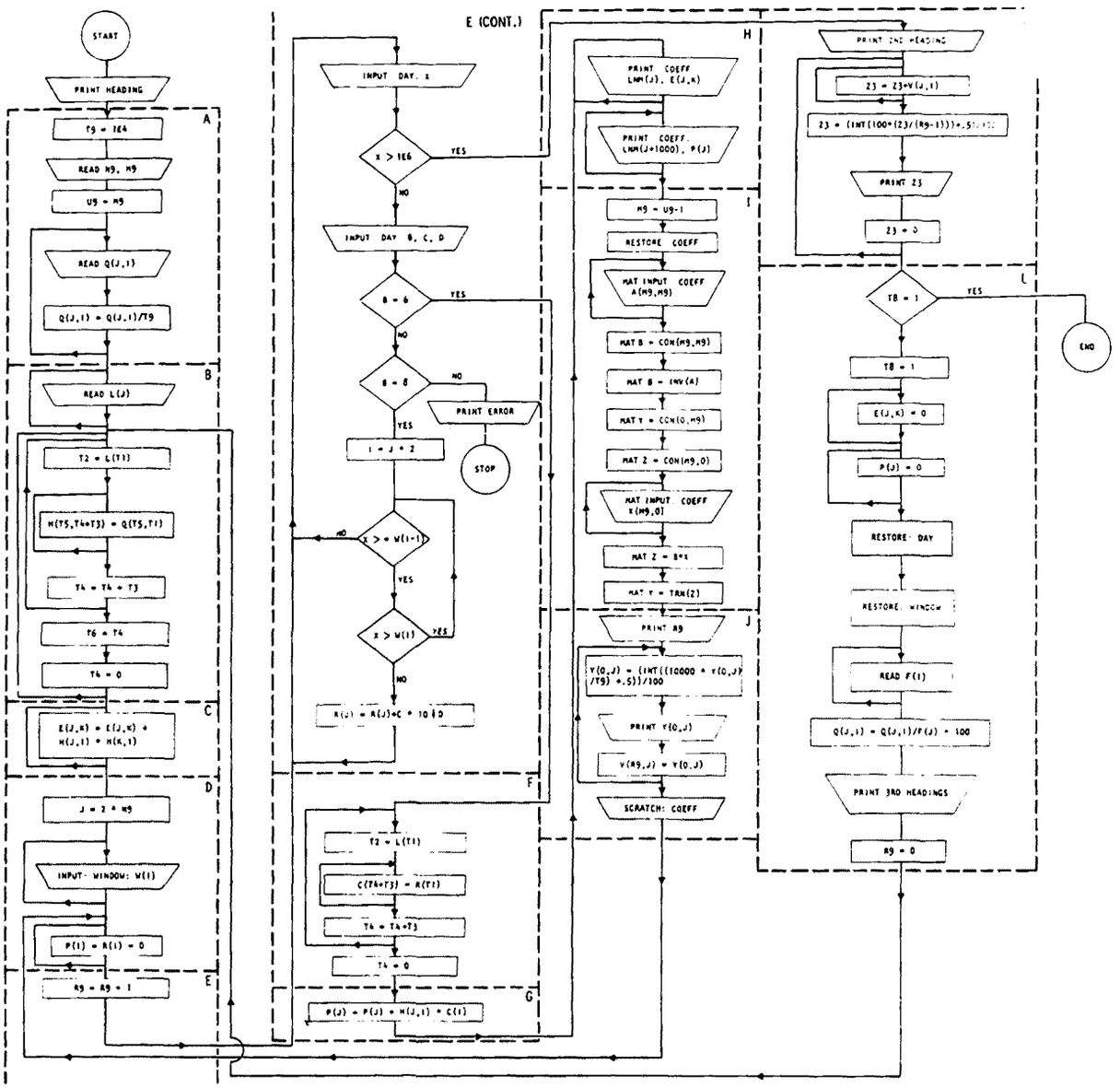

Figure A-3. Flow Diagram of BAJA-1

TABLE A-5. COMPUTER PROGRAM BAJA-1

```
GLFNST     15:11   SYS2   12/23/71 THUR

1    BAJA-1 CALCULATES THE PERCENTAGE AND WEIGHT ØF ØRGANIC MAT-
2    TER FRØM A SERIES ØF PØLLUTIØN SØURCES.  IT DIFFERS FRØM BAJA
3    IN THAT WEIGHTED AVERAGES FØR THE INDIVIDUAL PEAKS CAN BE
4    USED.   THE PEAKS CAN BE ASSIGNED WEIGHTS FRØM 1TØ10, WITH
5    THE MØRE RELIABLE PEAKS HAVING A HIGHER WEIGHT.  ØNLY INTEGER
6    WEIGHTS ARE ALLØWED.
7    THE WEIGHTS FØR THE INDIVIDUAL PEAKS ARE ENTERED IN LINE 220
8    ØR ANY LINE IMMEDIATELY FØLLØWING THE CALIBRATIØN FØR THE
9    PEAK AREA.
10   THE ØRGANIC LØAD IS CALCULATED ØN THE BASIS ØF A CALIBRATIØN
11   DØNE AT THE TIME THE STANDARD IS TAKEN.  THE ØRGANIC LØAD
12   IS ENTERED ØN LINE 230 IN THE UNITS ØF MG/LITER
13   ALL ØTHER PARAMATERS ARE THE SAME AS IN THE BAJA PRØGRAM
14   IF THE ØRGANIC LØAD IS NØT DESIRED TYPE IN LINE 1 T8=1


 BAJA1


 100 REM   FØR INSTRUCTIØNS LIST GLINST
 105 SCRATCH:CØEFF:
 110 PRINT"            PERCENT ØF EACH WASTE"
 120 FØR J=1TØ58
 130 PRINT"-";
 140 NEXTJ
 150 PRINT
 160 T9=1E4
 170REM------DATA FILE IS CALLED DAY
 180DATA6,3
 190DATA669550,83900,293400,152765,27905,117870
 200DATA1.229E6,328400,2.05E6,1.571E6,210125,565350
 210DATA4.008E6,328800,330500,1.44467E6,27116,327000
 220DATA1,1,1,1,1,1
 230DATA81,310,190
 240 DIMG(15),S(15),D(50,10),E(10,10),W(30),V(10,10),Y(10,10)
 250 DIMH(10,60),C(60)
 260 PRINT"RUN#";
 270PRINTTAB(12)"BATH";TAB(24)"EXCELSIØR";
 275PRINTTAB(36)"HERCULES"
 280 READ N9,M9
 290 U9=M9
```

TABLE A-5 (Continued)

```
300REMN=#ØFPEAKS,M=#ØFCØMPØNENTS
310 FØRJ=1TØ M9
320 FØR I=1TØ N9
330 READQ(J,I)
340 Q(J,I)=Q(J,I)/T9
350NEXTI
360NEXTJ
370 FØRJ=1TØN9
380 READL(J)
390 NEXT J
400 FØRT5=1TØU9
410FØRT1=1TØN9
420T2=L(T1)
430FØRT3=1TØT2
440 H(T5,T4+T3)=Q(T5,T1)
450 NEXTT3
460T4=T4+T3
470NEXTT1
480 T6=T4
490T4=0
500NEXTT5
510 FØRJ=1TØU9
520 FØRK=1TØU9
530 FØRI=1TØT6
540E(J,K)=E(J,K)+H(J,I)*H(K,I)
550NEXTI
560NEXTK
570NEXTJ
580 LET J=2*N9
590 FØRI=1TØJ
600 INPUT:WINDØW:W(I)
610 NEXT I
620 FØR I=1TØN9
630 P(I)=R(I)=0
640 NEXT I
650REM"R"WILLBEUSEDTØKEEPTRACKØFRUNS
660 R9=R9+1
670 INPUT:DAY:X
680IFX>1E6THEN1230
690 INPUT:DAY:B,C,D
700 IFB=6THEN830
710IFB=8THEN740
720PRINT"INCØRECT PRESENTATIØN ØF DATA"
730STØP
740FØR J=1TØN9
750I=J*2
760IFX=>W(I-1)THEN780
770GØTØ670
780IFX>W(I)THEN810
790R(J)=R(J)+C*10↑D
```

TABLE A-5 (Continued)

```
800GØTØ670
810NEXTJ
820GØTØ670
830 FØRT1=1TØN9
840T2=L(T1)
850FØRT3=1TØT2
860C(T4+T3)=R(T1)
870NEXTT3
880T4=T4+T3
890NEXTT1
900T4=0
910 FØRJ=1TØU9
920 FØRI=1TØT6
930P(J)=P(J)+H(J,I)*C(I)
940NEXTI
950NEXTJ
960FØRJ=1TØU9
970 FØRK=1TØU9
980PRINT:CØEFF:LNM(J);E(J,K)
990NEXTK
1000NEXTJ
1010 FØRJ=1TØU9
1020PRINT:CØEFF:LNM(1000+J);P(J)
1030NEXTJ
1040M9=U9-1
1050RESTØRE:CØEFF:
1060MATINPUT:CØEFF:A(M9,M9)
1070 MATB=CØN(M9,M9)
1080MATB=INV(A)
1090MATY=CØN(0,M9)
1100 MATZ=CØN(M9,0)
1110 MATINPUT:CØEFF:X(M9,0)
1120MATZ=B*X
1130MATY=TRN(Z)
1140PRINTR9;
1150 FØRJ=0TØU9-1
1160 Y(0,J)=(INT((10000*(Y(0,J)/T9))+.5))/100
1170  PRINTTAB(12*(J+1))Y(0,J);
1180V(R9,J)=Y(0,J)
1190 NEXT J
1200 PRINT
1210SCRATCH:CØEFF:
1220GØTØ620
1230FØRJ=1TØ58
1240PRINT"=";
1250NEXTJ
1260PRINT
```

TABLE A-5 (Concluded)

```
1270PRINT"AVERAGE";
1280FØRI=0TØU9-1
1290 FØRJ=1TØR9
1300 Z3=Z3+V(J,I)
1310NEXTJ
1320Z3=(INT((100*(Z3/(R9-1)))+.5))/100
1330 PRINTTAB(12*(I+1))Z3;
1340Z3=0
1350NEXTI
1360 IF T8=1THEN1650
1370 T8=1
1380 FØR J=1TØU9
1390 FØRK=1TØU9
1400 E(J,K)=0
1410 NEXTK
1420 P(J)=0
1430 NEXT J
1440RESTØRE:DAY:
1450RESTØRE:WINDØW:
1460 FØRI=1TØU9
1470 READF(I)
1480 NEXTI
1490FØRJ=1TØU9
1500 FØRI=1TØN9
1510 Q(J,I)=Q(J,I)/F(J)*100
1520 NEXT I
1530 NEXT J
1540 FØR J=1TØ 5
1550 PRINT
1560 NEXTJ
1570 PRINT"        ØRGANIC CARBØN FRØM EACH SØ
                                                URCE"

1580 PRINT"              (MILLIGRAMS PER LITER)"
1590FØRJ=1TØ58
1600PRINT"-";
1610NEXTJ
1620PRINT
1630 R9=0
1640 GØTØ400
1650 END
```

BAJA-2 Program

Program BAJA-2 performs all the functions of program BAJA-1, and has a capability for compensating for natural organic background of the sample. It requires the following inputs:

1. Pyrographic data on organic composition of upstream water are entered on lines 160 and 170. Number of peaks and number of components to be considered in upstream water are entered on line 160. Also added on this line are constants for two components in upstream water. Line 170 holds the constants for any remaining components of the upstream water.
2. Number of pollutants in the sample is given on line 180.
3. The pollution sources are identified on lines 190, 200, and 210.
4. The calibration constants for pollution sources are given on lines 230 through 260.
5. The mathematical weights to be assigned to each peak are given on line 270.
6. The calibration data (TOC) for the organic content of each component are given on line 280.

Normally, the upstream (unpolluted) sample is analyzed pyrographically and generated data are assigned in DAY-1 file. The contaminated sample is also analyzed pyrographically and generated data are assigned in DAY-2 file. The program BAJA-2 subtracts contributions of the DAY-1 file from values recorded in the DAY-2 file and then performs computations to determine the polluters' contributions.

In cases where the upstream water sample is unpolluted, its organic composition (in terms of carbohydrates, proteins, and liquids) can be determined. The flow diagram of BAJA-2 program is shown in Fig. A-4. To explain various operations of this program, it is divided into a number of sections:

Section A. The information regarding the upstream water sample is read into the program.

Section B. Limits for expected peaks are read into the program.

Section C. The data generated by upstream (unpolluted) water sample are read into the program.

Section D. The peak magnitudes are assigned according to specified windows.

Section E. Cross multiplication and summation of peaks are performed as specified by the equations on page 14. The results are read into a data file for later retrieval.

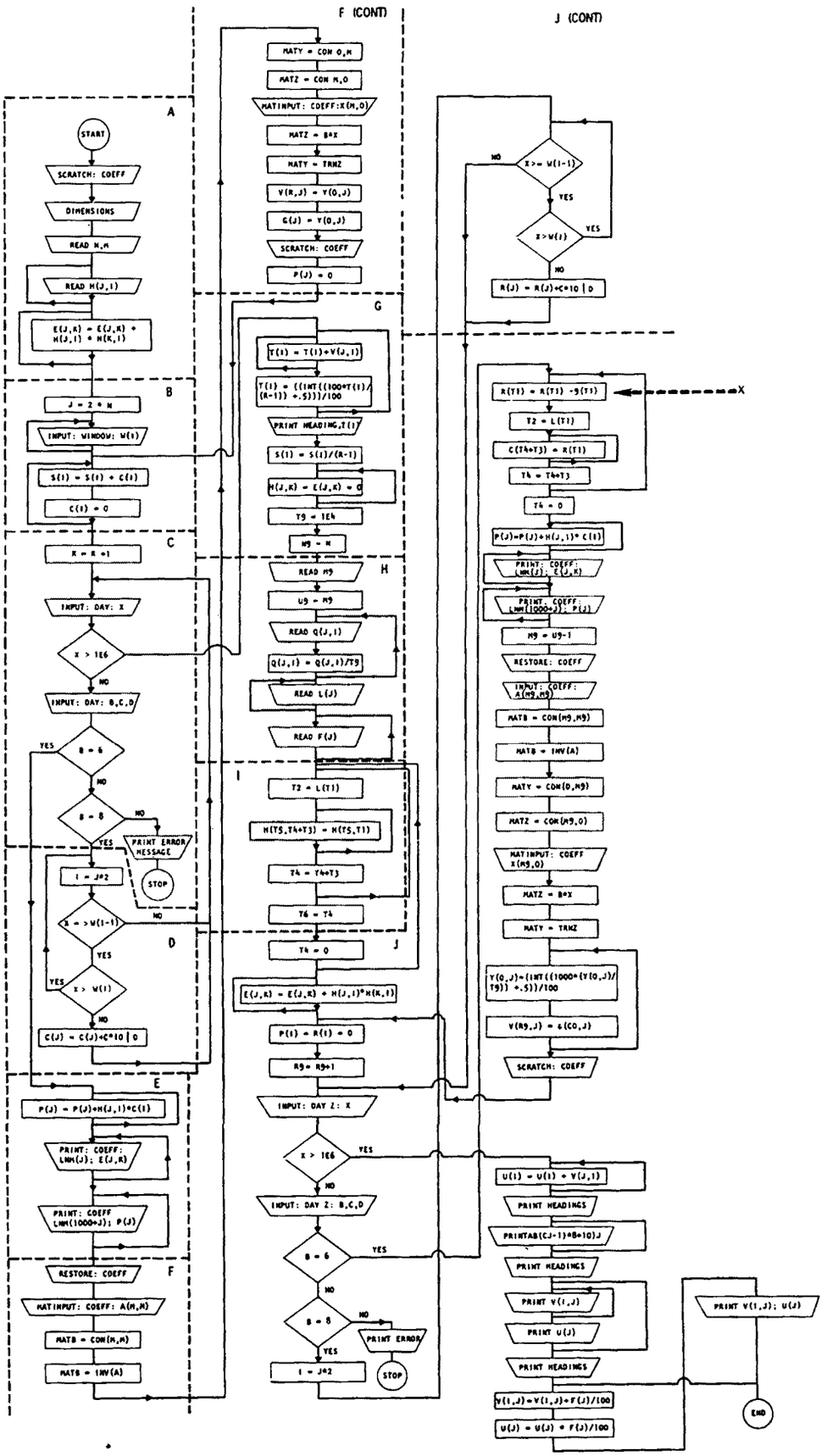

Figure A-4. Flow Diagram of BAJA-2

Section F. The data related to upstream water composition are retrieved and results for natural organic background calculated.

Section G. The calculations for natural organic background are completed and averaged.

Section H. The parameters for downstream (polluted) fraction of the sample are introduced.

Section I. The mathematical weighing of the peaks is accomplished.

The remainder of the program performs functions similar to operations described in sections C, D, E, F, and G. A notable exception is point X. At this point, the experimental data of the total sample are corrected for the contributions of the upstream sample.

A listing of the BAJA-2 program is shown in Table A-6.

TABLE A-6. COMPUTER PROGRAM BAJA-2

BAJA2

```
1     THESE ARE THE INSTRUCTIØNS FØR FEEDING INFØRMATIØN TØ
2  BAJA-2
3  LINE 160 IN THE PRØGRAM ENTERS THE NUMBER ØF PEAKS AND THE
4  NUMBER ØF CØMPØNENTS THAT ARE ØBTAINED IN THE WATER "BLANK"
5  ALSØ ENTERED ØN"LINE 160 ARE THE CØNSTANTS FØR THE FIRST TWØ
6  CØMPØNENTS IN THE WATER BLANK.
7  LINE 170 HØLDS THE CØNSTANTS FØR ANY REMAINING CØMPØNENTS IN
8  THE BLANK.
9  LINE 180 TELLS THE PRØGRAM HØW MANY CØMPØNENTS THERE ARE IN
10 THE WATER "SAMPLE". THE NUMBER ØF PEAKS WILL BE THE SAME AS
11 WHEN THE "BLANK" WAS RUN.
12 LINES 190-220 CØNTAIN THE NAMES ØF THE PØLLUTERS IN THE FØRM:
13 190 S$="WATER FØR THE GIN"
14 200 S$(2)="WATER FØR THE WHISKEY"
15 ETC. FØR ALL THE CØMPØNENTS
16 LINES 230-260 CØNTAIN THE CALIF CALIBRATIØN CØNSTANTS FØR THE
17 PØLLUTERS GIVEN IN LINES 190-220.
18 LINE 270 GIVES THE MATHEMATICAL WEIGHTS TØ BE ASSIGNED TØ
19 EACH ØF THE PEAKS. THIS ASSINGMENT IS RATHER ARBITRARY AND
20 IS ØN THE BASIS ØF THE REPRØDUCIBILITY ØF EACH PEAK.
21 LINE 280 CØNTAINS THE CALIBRATIØN DATA FØR THE ØRGANIC
22 CARBØN FØR EACH ØF THE CØMPØNENTS.
23    THE DATA FILE CALLED DAY1 CØNTAINS THE RUNS MADE WITH THE
24 WATER "BLANK".
25 THE DATA FILE CALLED DAY2 HAS THE DATA FØR THE ACTUAL SAMPLE
26 ØF WATER. THE DATA FILE CALLED WINDØW TELLS THE CØMPUTER WHIVH
27 PEAKS TØ ACCEPT.
28 "GØØD LUCK".
100REM===FØRINSTRUCTIØNSLISTGULF99
110PRINTTTY(10);TTY(10);TTY(10)
120SCRATCH:CØEFF:
150DIMV(10,10),W(20),Q(10,10),H(10,50),F(10),Y(10,10),C(60)
160DATA6,3,346,526,470,368,34,334,896,128,330,142,36,24
170DATA2396,432,6308,3340,1374,3228
180DATA3
190S$(1)="HERCULES"
```

TABLE 6. (Continued)

```
200S$(2)="EXCELSIØR"
210S$(3)="BATH"
230DATA4.008E6,328800,330500,1.447E6,27116,327000
240DATA1.229E6,328400,2.05E6,1.571E6,210125,365350
250DATA669550,83900,293400,152765,27905,117870
270DATA1,1,1,1,1,1
280DATA190,310
281DATA81
290READN,M
300U=M
310REMN=#ØFPEAKS,M=#ØFCØMPØNENTS
320FØRJ=1TØM
330FØRI=1TØN
340READH(J,I)
350NEXTI
360NEXTJ
370FØRJ=1TØM
380FØRK=1TØM
390FØRI=1TØN
400E(J,K)=E(J,K)+H(J,I)*H(K,I)
410NEXTI
420NEXTK
430NEXTJ
440LETJ=2*N
450FØRI=1TØJ
460INPUT:WINDØW:W(I)
470NEXTI
480FØRI=1TØN
490S(I)=S(I)+C(I)
500C(I)=0
510NEXTI
520REM"R"WILLBEUSEDTØKEEPTRACKØFRUNS
530R=R+1
540INPUT:DAY1:X
550IFX>1E6THEN1020
560INPUT:DAY1:B,C,D
570IFB=6THEN700
580IFB=8THEN610
590PRINT"NOGO"
600STØP
610FØRJ=1TØN
620I=J*2
630IFX=>W(I-1)THEN650
640GØTØ540
650IFX>W(I)THEN680
660C(J)=C(J)+C*10↑D
670GØTØ540
680NEXTJ
690GØTØ540
```

TABLE A-6 (Continued)

```
700FØRJ=1TØU
710FØRI=1TØN
720P(J)=P(J)+H(J,I)*C(I)
730NEXTI
740NEXTJ
750FØRJ=1TØU
760FØRK=1TØU
770PRINT:CØEFF:LNM(J);E(J,K)
780NEXTK
790NEXTJ
800FØRJ=1TØU
810PRINT:CØEFF:LNM(1000+J);P(J)
820NEXTJ
830RESTØRE:CØEFF:
840M=U-1
850MATINPUT:CØEFF:A(M,M)
860MATB=CØN(M,M)
870MATB=INV(A)
880MATY=CØN(0,M)
890MATZ=CØN(M,0)
900MATINPUT:CØEFF:X(M,0)
910MATZ=B*X
920MATY=TRN(Z)
930FØRJ=0TØU-1
940V(R,J)=Y(0,J)
950G(J)=Y(0,J)
960NEXTJ
970SCRATCH:CØEFF:
980FØRJ=1TØU
990P(J)=Ø
1000NEXTJ
1010GØTØ480
1020FØRI=0TØU-1
1030FØRJ=1TØR
1040T(I)=T(I)+V(J,I)
1050NEXTJ
1060T(I)=((INT((100*T(I)/(R-1))+.5)))/100
1070NEXTI
1080PRINTTAB(5)"NATURAL BACKGRØUND"
1090FØRJ=1TØ24
1100PRINT"-";
1110NEXTJ
1120PRINT
1130PRINT"PROTEINS",T(0)
1140PRINT"CARBØHYDRATES",T(1)
1150PRINT"LIPIDS",T(2)
```

TABLE A-6 (Continued)

```
1160FØRI=1TØN
1170S(I)=S(I)/(R-1)
1180PRINT
1190NEXTI
1200FØRJ=1TØ10
1210FØRK=1TØ10
1220H(J,K)=E(J,K)=0
1230NEXTK
1240NEXTJ
1250T9=1E4
1260N9=N
1270READM9
1280U9=M9
1290FØRJ=1TØM9
1300FØRI=1TØN9
1310READQ(J,I)
1320Q(J,I)=Q(J,I)/T9
1330NEXTI
1340NEXTJ
1350FØRJ=1TØN9
1360READL(J)
1370NEXTJ
1380FØRJ=0TØM9-1
1390READF(J)
1400NEXTJ
1410FØRT5=1TØU9
1420FØRT1=1TØN9
1430T2=L(T1)
1440FØRT3=1TØT2
1450H(T5,T4+T3)=Q(T5,T1)
1460NEXTT3
1470T4=T4+T3
1480NEXTT1
1490T6=T4
1500T4=0
1510NEXTT5
1520FØRJ=1TØU9
1530FØRK=1TØU9
1540FØRI=1TØT6
1550E(J,K)=E(J,K)+H(J,I)*H(K,I)
1560NEXTI
1570NEXTK
1580NEXTJ
1590FØRI=1TØN9
1600P(I)=R(I)=0
1610NEXTI
1620REM"R"WILLBEUSEDTØKEEPTRACKØFRUNS
1630R9=R9+1
```

TABLE A-6 (Continued)

```
1640INPUT:DAY2:X
1650IFX>1E6THEN2180
1660INPUT:DAY2:B,C,D
1670IFB=6THEN1800
1680IFB=8THEN1710
1690PRINT"YØU SCREWED UP ØN RUB #";R9
1700STØP
1710FØRJ=1TØN9
1720I=J*2
1730IFX=>W(I-1)THEN1750
1740GØTØ1640
1750IFX>W(I)THEN1780
1760R(J)=R(J)+C*10↑D
1770GØTØ1640
1780NEXTJ
1790GØTØ1640
1800FØRT1=1TØN9
1810R(T1)=R(T1)-S(T1)
1820T2=L(T1)
1830FØRT3=1TØT2
1840C(T4+T3)=R(T1)
1850NEXTT3
1860T4=T4+T3
1870NEXTT1
1880T4=0
1890FØRJ=1TØU9
1900FØRI=1TØT6
1910P(J)=P(J)+H(J,I)*C(I)
1920NEXTI
1930NEXTJ
1940FØRJ=1TØU9
1950FØRK=1TØU9
1960PRINT:CØEFF:LNM(J);E(J,K)
1970NEXTK
1980NEXTJ
1990FØRJ=1TØU9
2000PRINT:CØEFF:LNM(1000+J);P(J)
2010NEXTJ
2020M9=U9-1
2030RESTØRE:CØEFF:
2040MATINPUT:CØEFF:A(M9,M9)
2050MATB=CØN(M9,M9)
2060MATB=INV(A)
2070MATY=CØN(0,M9)
2080MATZ=CØN(M9,0)
2090MATINPUT:CØEFF:X(M9,0)
```

TABLE A-6. (Continued)

```
2100MATZ=B*X
2110MATY=TRN(Z)
2120FØRJ=0TØU9-1
2130Y(0,J)=(INT((10000*(Y(0,J)/T9))+.5))/100
2140V(R9,J)=Y(0,J)
2150NEXTJ
2160SCRATCH:COEFF:
2170GØTØ1590
2180FØRI=0TØU9-1
2190FØRJ=1TØR9-1
2200U(I)=U(I)+V(J,I)
2210NEXTJ
2220U(I)=(INT((100*(U(I)/(R9-1)))+.5))/100
2230NEXTI
2240PRINTTAB(10)"VØLUME PERCENT FRØM EACH SØURCE"
2241PRINTTAB(10)"-------------------------------"
2242PRINT
2243PRINTTAB(10)"RUNS"
2250PRINT"SØURCE";
2260FØRJ=1TØR9-1
2270PRINTTAB((J-1)*8+10)J;
2280NEXTJ
2290PRINTTAB((R9-1)*8+10)"AVERAGE"
2300FØRJ=1TØ((R9-1)*8+17)
2310PRINT"-";
2320NEXTJ
2330PRINT
2340FØRJ=0TØU9-1
2350PRINTS$(J+1);
2360FØRI=1TØR9-1
2370PRINTTAB((I-1)*8+10)V(I,J);
2380NEXTI
2390PRINTTAB((R9-1)*8+10)U(J)
2400NEXTJ
2410PRINTTTY(10)
2420PRINTTAB(10)"CONCENTRATIØN ØF ØRGANIC CARBØN FRØM EACH SØURCE"
2430PRINTTAB(20)"MG/L"
2435PRINTTAB(10)"-----------------------------------------------"
2440PRINT
2450PRINTTAB(10)"RUNS"
2455PRINT"SØURCE";
2460FØRJ=1TØR9-1
2470PRINTTAB((J-1)*8+10)J;
2480NEXTJ
2490PRINTTAB((R9-1)*8+10)"AVERAGE"
```

TABLE A-6 (Concluded)

```
2500FØRJ=1TØ((R9-1)*8+17)
2510PRINT"-";
2520NEXTJ
2530PRINT
2540FØRJ=0TØU9-1
2550PRINTS$(J+1);
2560FØRI=1TØR9-1
2570V(I,J)=V(I,J)*F(J)/100
2580PRINTTAB(8*(I-1)+10)(INT(100*V(I,J)+.5))/100;
2590NEXTI
2600U(J)=U(J)*F(J)/100
2610PRINTTAB((R9-1)*8+10)(INT(100*U(J)+.5))/100
2620NEXTJ
2630END
```

Example of BAJA Computations

To illustrate operation of the BAJA program, computer and longhand calculations were performed on data generated as a result of analysis of aqueous solution containing 20-ppm albumin, 10-ppm glucose, and 1-ppm oleic acid. A triplicate analysis was performed, generating input data (DAY), as shown in Table A-7.

TABLE A-7. INPUT DATA (FILE DAY)

```
 90 "MIXTURE 8"
100 0182,8
110 8635,0
120 0214,8
130 5666,0
140 0297,8
150 8742,0
160 0367,8
170 6012,0
180 0596,8
190 0837,0
200 1413,8
210 4968,0
220 2980,6
230 0000,0
380 0178,8
390 8690,0
400 0212,8
410 5578,0
420 0290,8
430 8800,0
440 0359,8
450 6260,0
460 0583,8
470 1100,0
480 1440,8
490 4895,0
500 2983,6
510 0000,0
520 0180,8
530 8930,0
540 0215,8
550 5777,0
560 0290,8
570 8871,0
580 0359,8
590 6189,0
600 0434,8
610 0001,0
620 0578,8
630 1103,0
640 1430,8
650 2637,0
660 1431,8
670 2637,0
680 3000,6
690 0000,0
700 1E10
```

The data, when analyzed by computer program BAJA, yielded the following results:

TABLE A-8

MIXTURE 8

MG PER LITER

SAMPLE	ALBUMIN	GLUCOSE	ØLEIC	%FIT
1	19.15	9.23	.92	96
2	18.69	9.34	.99	96
3	19.53	9.51	.96	96
AVERAGE	19.12	9.36	.96	

Data resulting from an analysis of the first sample were also computed (longhand) by solving the following equations:

$$\sum_{i=1}^{n} a_{i1}y_i = \left(\sum_{i=1}^{n} a_{i1}^2\right)\hat{c}_1 + \left(\sum_{i=1}^{n} a_{i1}a_{i2}\right)\hat{c}_2 + \left(\sum_{i=1}^{n} a_{i1}a_{i3}\right)\hat{c}_3$$

$$\sum_{i=1}^{n} a_{i2}y_i = \left(\sum_{i=1}^{n} a_{i2}a_{i1}\right)c_1 + \left(\sum_{i=1}^{n} a_{i2}^2\right)\hat{c}_2 + \left(\sum_{i=1}^{n} a_{i2}a_{i3}\right)c_3 \quad \text{(A-1)}$$

$$\sum_{i=1}^{n} a_{i3}y_i \left(\sum_{i=1}^{n} a_{i3}a_{i1}\right)\hat{c}_1 + \left(\sum_{i=1}^{n} a_{i3}a_{i2}\right)\hat{c}_2 + \left(\sum_{i=1}^{n} a_{i3}^2\right)\hat{c}_3$$

The analysis of sample yielded six peaks for a mixture containing three compounds (albumin, glucose, and oleic acid). The following set of coefficients is taken from the calibration table (page 33):

	C_1 Albumin	C_2 Glucose	C_3 Oleic Acid
a_1	174	449	1198
a_2	263	64	216
a_3	236	165	3154
a_4	185	71	1699
a_5	17	18	687
a_6	167	9	1615

The values for "y," as transcribed from the first pyrographic analysis (lines 110, 130, 150, 170, 190, and 210 from Table A-7) are:

y_1	8635
y_2	5666
y_3	8742
y_4	6012
y_5	837
y_6	4968

The coefficients for Eq. A-1 are calculated

$$\sum_{i=1}^{n} a_{i1}^2 = 217{,}544$$

$$\sum_{i=1}^{n} a_{i1}\, y_i = 7{,}011{,}865 \qquad \sum_{i=1}^{n} a_{i1}\, a_{i2} = 148{,}842$$

$$\sum_{i=1}^{n} a_{i2}\, y_i = 6{,}168{,}799 \qquad \sum_{i=1}^{n} a_{i1}\, a_{i3} = 1{,}605{,}303$$

$$\sum_{i=1}^{n} a_{i3}\, y_i = 57{,}953{,}581 \qquad \sum_{i=1}^{n} a_{i2}^2 = 238{,}368$$

$$\sum_{i=1}^{n} a_{i2}\, a_{i3} = 129{,}666$$

$$\sum_{i=1}^{n} a_{i3}^2 = 17{,}396{,}371$$

From this, three linear equations are formed:

$$7{,}011{,}865 = 217{,}544\ C_1 + 148{,}842\ C_2 + 1{,}605{,}303\ C_3$$

$$6{,}168{,}799 = 148{,}842\ C_1 + 238{,}368\ C_2 + 1{,}219{,}666\ C_3$$

$$57{,}953{,}581 = 1{,}605{,}303\ C_1 + 1{,}219{,}666\ C_2 + 17{,}396{,}371\ C_3$$

Algebraic solution of those linear equations yields:

C_1 = 19.2 (Albumin)

C_2 = 9.2 (Glucose)

C_3 = 0.92 (Oleic Acid)

Which agrees with the results of the computed analysis (Table A-8).

☆U.S. GOVERNMENT PRINTING OFFICE:1973 514-155/317 1-3

1 Accession Number	2 Subject Field & Group	SELECTED WATER RESOURCES ABSTRACTS INPUT TRANSACTION FORM
W		

5 Organization

Rocketdyne, a Division of North American Rockwell Corporation
Canoga Park, California

6 Title

Pyrographic Gross Characterization of Water Contaminants

10 Author(s)

Lysyj, Ihor
Newton, Peter R.

16 Project Designation

EPA, Contract No. 14-12-802, Project No. 16040 EXD

21 Note

22 Citation

Environmental Protection Agency Report No. EPA-R2-73-227, May 1973

23 Descriptors (Starred First)

*Water Pollution Monitoring,
*Waste Source Identification and Quantification,
Pyrographic Methodology, Analysis of Natural Waters

25 Identifiers (Starred First)

*Waste Source Identification and Quantification

27 Abstract A hydrochemical instrument and methodology were developed for direct analysis of organic materials in aqueous solutions based on thermal fragmentation followed by gas chromatographic separation and detection of the resulting derivative compositions. The applications of the developed technique to water pollution surveillance, optimization of waste treatment processes, and characterization of natural waters were studied. It was found that a recorded pattern of pyrolytically produced fragments for a given water sample reflects the total nature of its organic composition, and can be interpreted and differentiated in a number of ways. Using *a priori* established calibration patters for individual components to be found in a mixture, the pattern produced by a mixture can be analyzed mathematically. The system can be calibrated and the data can be interpreted in terms of pure organic compounds, classes of organic materials, or any other arbitrarily defined organic mixtures such as those found in industrial waste effluents. Application of this technique to pollution surveillance is based on the fact that each industry has a waste whose chemical composition is distinctive to its operation. The uniqueness of such waste compositions offers a means for their characterization as separate entities, rather than as a collection of various chemical species. The validity of this postulate was experimentally demonstrated. With this method, both the identity of the source and the quantity of the waste contributed by each source could be determined.

Abstractor	Institution
Ihor Lysyj	Rocketdyne