EPA-600/2-77-146
September 1977

Environmental Protection Technology Series

WASTEWATER DEMINERALIZATION BY TWO-STAGE FIXED-BED ION EXCHANGE PROCESS

Municipal Environmental Research Laboratory
Office of Research and Development
U.S. Environmental Protection Agency
Cincinnati, Ohio 45268

RESEARCH REPORTING SERIES

Research reports of the Office of Research and Development, U.S. Environmental Protection Agency, have been grouped into nine series. These nine broad categories were established to facilitate further development and application of environmental technology. Elimination of traditional grouping was consciously planned to foster technology transfer and a maximum interface in related fields. The nine series are:

1. Environmental Health Effects Research
2. Environmental Protection Technology
3. Ecological Research
4. Environmental Monitoring
5. Socioeconomic Environmental Studies
6. Scientific and Technical Assessment Reports (STAR)
7. Interagency Energy-Environment Research and Development
8. "Special" Reports
9. Miscellaneous Reports

This report has been assigned to the ENVIRONMENTAL PROTECTION TECHNOLOGY series. This series describes research performed to develop and demonstrate instrumentation, equipment, and methodology to repair or prevent environmental degradation from point and non-point sources of pollution. This work provides the new or improved technology required for the control and treatment of pollution sources to meet environmental quality standards.

This document is available to the public through the National Technical Information Service, Springfield, Virginia 22161.

EPA-600/2-77-146
September 1977

WASTEWATER DEMINERALIZATION BY TWO-STAGE FIXED-BED ION EXCHANGE PROCESS

by

Ching-lin Chen and Robert P. Miele
County Sanitation Districts of Los Angeles County
Whittier, California 90607

Contract No. 14-12-150

Project Officer

Irwin J. Kugelman
Wastewater Research Division
Municipal Environmental Research Laboratory
Cincinnati, Ohio 45268

MUNICIPAL ENVIRONMENTAL RESEARCH LABORATORY
OFFICE OF RESEARCH AND DEVELOPMENT
U.S. ENVIRONMENTAL PROTECTION AGENCY
CINCINNATI, OHIO 45268

DISCLAIMER

This report has been reviewed by the Municipal Environmental Research Laboratory, U.S. Environmental Protection Agency, and approved for publication. Approval does not signify that the contents necessarily reflect the views and policies of the U.S. Environmental Protection Agency, nor does mention of trade names or commercial products constitute endorsement or recommendation for use.

FOREWORD

The Environmental Protection Agency was created because of increasing public and government concern about the dangers of pollution to the health and welfare of the American people. Noxious air, foul water, and spoiled land are tragic testimony to the deterioration of our natural environment. The complexity of the environment and the interplay between its components require a concentrated and integrated attack on the problem.

Research and development is that necessary first step in problem solution and it involves defining the problem, measuring its impact, and searching for solutions. The Municipal Environmental Research Laboratory develops new and improved technology and systems for the prevention, treatment, and management of wastewater and solid and hazardous waste pollutant discharges from municipal and community sources, for the preservation and treatment of public drinking water supplies, and to minimize the adverse economic, social, health, and aesthetic effects of pollution. This publications is one of the products of that research; a most vital communications link between the research and the user community.

Renovation of wastewater to allow for reuse often requires that salts which are added during use be removed. This report summarizes studies on the use of ion exchange for demineralization of effluents from wastewater treatment plants.

Francis T. Mayo, Director
Municipal Environmental
Research Laboratory

ABSTRACT

A 9.5 l/min (2.5 gpm) two-stage fixed-bed ion exchange pilot plant was used to evaluate the ion exchange process for demineralization of carbon-treated secondary effluent at the Pomona Advanced Wastewater Treatment Research Facility, Pomona, California. The pilot plant consisted of four exchange columns operated in series--primary cation, primary anion, secondary cation, and secondary anion column. The regenerant solutions were applied in a downflow direction, first to the secondary columns and then to the primary columns. This mode of regeneration was to ensure that the secondary exchange columns were at a higher state of regeneration and thus were more effective in removing the monovalent ions with lower selectivity order.

After the evaluation of the two-stage ion exchange process, a fully automated 15 l/min (4 gpm) single-stage ion exchange pilot plant was then operated over a period of thirty-two months for resin life study. The pilot plant simulated a full scale operation and regeneration of the primary stage of a two-stage fixed-bed ion exchange plant. Although the physical appearance of the resin particles was noticeably changed, yet no significant deterioration in the overall process performance was observed during the thirty-two month study period. Therefore, the resins were considered rather stable for the demineralization of a carbon-treated secondary effluent in a fixed-bed mode of operation.

The estimated process cost (based on August, 1973 material and construction costs) to demineralize the Pomona wastewater from 600 mg/l TDS to 60 mg/l TDS in a 37,850 cu m/day (10 MGD) plant was about 5.9¢/1,000 liters (22.4¢/1,000 gallons), excluding the costs of carbon pretreatment and brine disposal. Cost estimates were also made for higher influent TDS wastewater, as high as 1,500 mg/l. A reduction in ion exchange total process cost was shown feasible by blending practice.

This report was submitted by County Sanitation Districts of Los Angeles County in fulfillment of Contract No. 14-12-150 under the partial sponsorship of the U.S. Environmental Protection Agency. Work on this report was completed as of June 1973.

CONTENTS

Foreword iii
Abstract iv
Figures vi
Tables viii
Acknowledgments x

1. Introduction 1
2. Conclusions 3
3. Recommendations 5
4. Pilot Plant Description 6
5. Pilot Plant Results and Discussions 15
   Pretreatment 15
   Regeneration efficiency vs. regenerant level . 16
   Regeneration level vs. product quality 16
   Demineralization flow rate 19
   Carbon dioxide removal 21
   Weak acid cation exchange resin 23
   Effect of influent TDS 30
   Brine characteristics 39
   Brine recycling 39
   Resin life 50
   Steady-state pilot plant operation 60

6. Cost Estimate 63

References 71

FIGURES

Number		Page
1	Schematic flow diagram for demineralization cycle . .	10
2	Schematic flow diagram for backwash cycle	11
3	Schematic flow diagram for regeneration and rinsing cycles	13
4	Regeneration study--cation exchange resin	17
5	Regeneration study-- anion exchange resin	18
6	Effect of demineralization flow rate upon resin breakthrough capacity	20
7	Schematic regeneration flow diagram for weak acid cation exchange resin study	25
8	Schematic demineralization flow diagram for weak acid cation exchange resin study.	26
9	Effects of influent TDS upon TDS removal and product TDS	38
10	Relationship of concentration vs. volume of the impurity ions in the cation exchanger brine . . .	43
11	Relationship of concentration vs. volume of the impurity ions in the anion exchanger brine. . . .	44
12	Zoning diagram of brine recycling	45
13	Schematic flow diagram for ion exchange process without brine recycling	46
14	Schematic flow diagram for ion exchange process with brine recycling	47
15	General layout of the automated single-stage ion exchange pilot plant.	56

FIGURES(CONTINUED)

Number		Page
16	System performance of the single-stage ion exchange unit	57
17	Performance of the two-stage ion exchange system under optimum operating conditions	61
18	Effect of plant size on ion exchange process cost--with 90% TDS reduction	64
19	Effect of influent TDS upon ion exchange process cost--with 90% TDS reduction	66

TABLES

Number		Page
1	Dimensions and Specifications of Pilot Plant Ion Exchange Resin Columns	7
2	Resin Properties and Characteristics	9
3	Typical Operating Flow Rates for Two-Stage Ion Exchange Pilot Plant	14
4	Effects of Carbon Dioxide Removal upon the System Performance	22
5	Water Quality Characteristics in Phase One Weak Acid Cation Exchange Resin Study	27
6	Comparison of the Performance of the Two-Stage Ion Exchange System between Two Different Modes of Operations (Weak Acid Resin Study--Phase One)	29
7	Water Quality Characteristics in Phase Two Weak Acid Cation Exchange Resin Study	31
8	Comparison of the Performance of the Two-Stage Ion Exchange System between Two Different Modes of Operations (Weak Acid Resin Study--Phase Two)	32
9	Performance of the Two-Stage Ion Exchange System Operating on 610 mg/l TDS Feed Water	34
10	Performance of the Two-Stage Ion Exchange System Operating on 1,150 mg/l TDS Feed Water	35
11	Performance of the Two-Stage Ion Exchange System Operating on 1,640 mg/l TDS Feed Water	36
12	Effects of the Influent TDS upon the Two-Stage Ion Exchange System Performance	37

TABLES(CONTINUED)

Number		Page
13	Charactertistics of Brines from the Cation and Anion Exchange Columns	40
14	Minimum Reject Streams Per Cycle of Regeneration	41
15	Average Effluent Qualities of the Two-Stage Ion Exchange System Operating with Brine Recycling	48
16	Effects of Brine Recycling upon the Two-Stage Ion Exchange Pilot Plant Performance	49
17	Quality Characteristics of the Various Portions of the Brines	51
18	Dry Screen Analysis of the Cation and Anion Exchange Resins (% Retained Cumulative)	52
19	Resin Capacities of the Cation and Anion Resins	53
20	Rinse Water Requirements of Anion Resins	54
21	Operation Statistics of Single-Stage vs. Two-Stage Ion Exchange System	58
22	Typical Performance of the Automated Single-Stage Ion Exchange System	59
23	Average Water Quality Characteristics of the Two-Stage Ion Exchange Pilot Plant under Optimum Operating conditions	62
24	Cost Estimate of Two-Stage Ion Exchange Process--37,850 cu m/day (10 MGD) Product Water Plant	65
25	Cost Estimate Comparison of Two-Stage vs. Single-Stage Ion Exchange System--37,850 cu m/day (10 MGD) Plant	68
26	Cost Estimate Comparison of Two-Stage vs. Single-Stage Ion Exchange System with Blending Operation	69
27	Cost Estimate for Producing 500 mg/l TDS Blended Product Water--37,850 cu m/day (10 MGD) Ion Exchange Plant Size	70

ACKNOWLEDGMENTS

This study was jointly sponsored by the U.S. Environmental Protection Agency and the County Sanitation Districts of Los Angeles County.

The authors are deeply grateful to Mr. Eugene P. Young of Infilco, Inc., Tucson, Arizona, for his advice and cooperation in this effort.

Thanks are also extended to Dr. Hans Krock, former project engineer of the County Sanitation Districts of Los Angeles County, for his participation in the initial stages of the pilot plant study.

The valuable assistance of both the laboratory and the pilot plant operating personnel of the Pomona Advanced Wastewater Research Facility are also gratefully appreciated.

SECTION 1

INTRODUCTION

Almost all uses of water serve to increase the mineral and organic contents of the water. In most cases, the amount of minerals added during one domestic use cycle of water is about 300 mg/l. If the natural quality of any water body is to be well preserved, it is necessary that all the added impurities, both organic and inorganic, be removed from the wastewater streams. The organic impurities can be effectively removed by many processes, such as biological oxidation and physical adsorption, while the inorganic minerals can be most effectively removed by demineralization processes. Therefore, wastewater demineralization has become an indispensable part of the total effort to conserve the natural water environment.

Furthermore, as the human activity continues to accelerate, it becomes more difficult to supply a sufficient quantity of the required quality of water. Because of its availability in quantity and in the needed location, wastewater reuse has emerged as a potential solution to water supply problems. The water quality requirements for different types of wastewater reuse are quite different. Wastewater demineralization has become an effective means to reduce the TDS level to meet the quality requirement for any particular water reuse application.

The ion exchange process, which has been successfully employed for many years in municipal and industrial water treatment, has only recently been considered for demineralization of wastewater. This delay has been primarily attributed to the late development of the macroreticular resins, which have much larger interstices to minimize the resin fouling caused by the refractory organic materials present in the wastewater. In addition to this resin development, an alteration of regeneration concepts has contributed to the success of this application to wastewater demineralization. In industrial applications, resins are regenerated with excessively high levels of regenerant to achieve complete regeneration of the resins yielding maximum resin capacity and best effluent quality. However, in the wastewater demineralization applications, a certain amount of TDS in the product water is quite acceptable. For this reason, the regenerant level for the resins can be selected as low as possible to optimize the usage of regenerant. This has greatly improved the regenerant

utilization efficiency from 30 percent or less in industrial applications to 85 percent or more in wastewater applications. Since the regenerant cost is the dominant item in the ion exchange unit process cost, the great improvement in the regeneration efficiency has substantially reduced the total process cost. Further savings can be realized by blending of the demineralized water with the non-demineralized water to produce the desired water quality for a particular wastewater reuse application.

A 9.5 l/min (2.5 gpm) two-stage and a fully automated 15 l/min (4 gpm) single-stage fixed-bed ion exchange pilot plant were thus operated at Pomona Advanced Wastewater Treatment Research Facility to achieve the following specific objectives:

A. To evaluate the effect of carbon adsorption pretreatment on the ion exchange process performance.

B. To optimize the various operating parameters of a two-stage fixed-bed ion exchange process for wastewater demineralization.

C. To determine the feasibility of partial reuse of the brine waste.

D. To investigate the resin stability and process reliability through a long term routine operation.

E. To develop the process cost for wastewater demineralization by a two-stage fixed-bed ion exchange process.

SECTION 2

CONCLUSIONS

The following conclusions can be drawn from this pilot plant study:

A. Activated carbon adsorption was an effective pretreatment process in preventing the resins being fouled by the organic substances in the feed water.

B. The two-stage fixed-bed ion exchange pilot plant could effectively and reliably reduce the influent TDS by 90 percent at the regenerant levels of 17.6 g/l (1.1 lb/cu ft) of H_2SO_4 and 9.6 g/l (0.6 lb/cu ft) of NH_3 for cation and anion exchanger, respectively.

C. At the above regenerant levels, the pilot plant produced regeneration efficiencies of 85 percent and 90 percent for the cation and anion exchanger, respectively.

D. Operation at these low regenerant levels resulted in the cation resins being somewhat more flow sensitive than expected. The anion resins were less sensitive to flow rate within the test range.

E. Partial recycling of the brines, which consisted of spent regenerants and rinse waters, could improve the water recovery from 89 percent to 93 percent without degrading the product quality.

F. The removal of CO_2 from the primary cation column effluent did not significantly improve the performance of the anion exchanger during the demineralization cycle. However, it did minimize the minor foaming problem which developed in the regeneration cycle.

G. The combination of a weak acid primary cation exchanger and a strong acid secondary cation exchanger did not produce a better performance than the strong acid cation exchanger in both primary and secondary stages.

H. Similar process performance could be attained by applying the same operating conditions to the carbon-treated secondary effluent with TDS as high as 1,640 mg/l.

I. The results of the resin life study, which was conducted with an automated single-stage ion exchange pilot plant, indicated that both cation and anion exchange resins used in this study were very stable.

J. The estimated process cost for a 90 percent demineralization of the Pomona carbon-treated secondary effluent in a 37,850 cu m/day (10 MGD) plant was about 5.9¢/1,000 liters (22.4¢/1,000 gallons), excluding the costs of carbon adsorption pretreatment and brine disposal. The estimate was based on August, 1973 construction and material costs.

SECTION 3

RECOMMENDATIONS

The following subjects which may eventually lead to a substantial reduction in ion exchange process cost are recommended for further studies:

A. To study the possibility of improving the resin regeneration efficiency by adopting a true countercurrent ion exchange pilot plant system instead of the semi-countercurrent two-stage fixed-bed system.

B. To determine the potential savings in resin inventory in a continuous (or pulsing) type moving-bed ion exchange system as compared to the two-stage fixed-bed pilot plant system.

C. To investigate the feasibility of using a low cost regenerant, such as lime slurry instead of ammonium hydroxide, for resin regeneraton.

D. To demonstrate the profitability of using a new HNO_3-NH_4OH instead of H_2SO_4-NH_4OH regeneration mode to recover the ammonium ion from the brine in a valuable NH_4NO_3 form.

E. To evaluate the various novel ion exchange processes, such as Desal process (1) by Rohm & Haas, Philadelphia, Pennsylvania and Sirotherm process (2) by ICI Australia Limited, Melbourne, Australia, for wastewater demineralization application.

SECTION 4

PILOT PLANT DESCRIPTION

GENERAL

The ion exchange pilot plant, which was supplied by Infilco, Inc., Tucson, Arizona, was installed at the Pomona Research facility in early 1967. The ion exchange portion of the pilot plant consisted of four columns in series--primary cation, primary anion, secondary cation, and secondary anion. The dimension and resin volume of each ion exchange column are listed in Table 1. Pretreatment facilities such as densator (a sludge blanket clarifier), rapid sand filter, and activated carbon adsorption column were also supplied with the original pilot plant.

Since the pilot plant was not automated and was operated for research purposes only, operational procedures as would exist in a full scale plant were not employed. Instead, operation of the unit was dictated by the fact that personnel were at the site only during the daytime working shift. This limitation necessitated tailoring items such as flow rate and regeneration interval to accommodate the operating schedule. The regeneration procedure required attendance of technicians while the demineralization cycle did not. Therefore, the unit was placed on-stream to commence the demineralization cycle at 4 PM each afternoon and this phase continued through 8 AM the following morning. The flow rate during the demineralization cycle was regulated so that exhaustion would not occur prior to 8 AM. Backwashing, regeneration, and rinsing procedures were then completed within two hours and the unit remained off-stream until the next demineralization cycle began at 4 PM. Product water volume from each cycle of operation of the pilot plant was approximately 9,080 liters (2,400 gallons). The same unit could be operated at higher flow rates and regenerated more often to allow treatment of about 18,900 liters (5,000 gallons) during each 24 hour period.

RESINS

The resins used in this study were the Duolite C-20 strong acid cation exchange resin and the Duolite A-30B intermediate base anion exchange resin. Both resins were manufactured and supplied by the Diamond Shamrock Chemical Company, Redwood City,

TABLE 1. DIMENSIONS AND SPECIFICATIONS OF PILOT PLANT ION EXCHANGE RESIN COLUMNS

Parameter	Primary Cation Column	Primary Anion Column	Secondary Cation Column	Secondary Anion Column
Column Diameter				
in	20	10	13	10
cm	50.8	25.4	33.0	25.4
Column Height				
in	72	56	58	56
cm	183	142	147	142
Resin Bed Depth				
in	45	39	41	39
cm	113	98.7	105	98.7
Resin Volume				
cu ft	8.0	1.6	3.2	1.6
cu m	0.23	0.05	0.09	0.05
Type of Resin	Duolite C-20	Duolite A-30B	Duolite C-20	Duolite A-30B

California. Some of the major physical and chemical characteristics of the two resins are shown in Table 2. The A-30B intermediate base resin was regenerated with ammonium hydroxide in this study. Therefore, it was more appropriately classified as a weak base anion exchange resin.

OPERATION

Basically, each test run of the ion exchange pilot plant involved four consecutive operation cycles, namely, demineralization cycle, backwash cycle, regeneration cycle, and rinse cycle.

During the demineralization cycle, flow was directed downward through each of the four columns in series as shown in Figure 1. The source of the feed water was the carbon-treated secondary effluent from the 12.6 l/sec (200 gpm) carbon adsorption pilot plant at the Pomona Research Facility. Some of the product water from the ion exchange pilot plant was used as process water for chemical make-up and rinse operation, and the rest of it was discharged to waste. The demineralization cycle was first monitored by the determinations of pH and conductivity in the successive grab samples of the product water. This monitoring operation was soon replaced by the on-stream conductivity recording system.

Backwashing was accomplished in an upflow direction commencing with the secondary anion exchanger and proceeding in reverse order to the primary cation exchanger. Backwash water (carbon-treated secondary water) for each column was first passed downflow through the preceding columns of the series as shown in Figure 2.

Backwashing was necessary to remove suspended solids and to rearrange the resin beds. Most of the suspended solids were removed in the primary cation column, and backwashing of this column was conducted after each demineralization cycle. Rearranging the resin bed was necessary primarily to disperse the uppermost layer of the cation resins, which were exhausted in the calcium form, so that the potential tendency of calcium sulfate precipitation could be greatly reduced during regeneration with sulfuric acid. Backwashing also eliminated short-circuiting by removing entrapped bubbles or other restrictions. A backwash frequency of once every 5 demineralization cycles was found adequate for the secondary cation column and for both anion columns.

Although the backwash wastewater was piped to waste in the pilot plant, this water could be recycled to the pretreatment unit (carbon adsorption or equivalent) in a full-scale plant. The backwash wastewater was of no higher mineral content than the feed water, but it might be necessary to remove the suspended solids before recycling.

TABLE 2. RESIN PROPERTIES AND CHARACTERISTICS

Parameter	Duolite C-20	Duolite A-30B	Amberlite IRC-84
Functional Groups	Nuclear Sulfonic	Tertiary Amine, Quarternary Ammonium	Carboxylic
Ionic Form	Hydrogen	Free Base	Hydrogen
Physical Form	Beads	Beads	Beads
Chemical Classification	Strong-acid	Intermediate-base *	Weak-acid
Specific Gravity	1.32 (Na form)	1.18 (Cl form)	1.16 (H form)
Screen Grading (Wet) **	16-50 mesh	16-50 mesh	16-50 mesh
Effective Size, mm	0.53	0.47	0.42
Uniformity Coefficient	1.49	1.62	1.75
Total Exchange Capacity, equivalent/liter	2.2	2.6	4.1
Effective pH Range	0-14	0-9	5-14
Maximum Temperature, ^{o}C	150	80	120
Moisture Content, %	43-46	53-57	43-50
Manufacturer	Diamond Shamrock Chemical Co. (1)		Rohm & Haas Co.(2)

* Being considered as a weak-base resin due to the use of ammonium hydroxide as regenerant in this study.
** U.S. Standard Screens

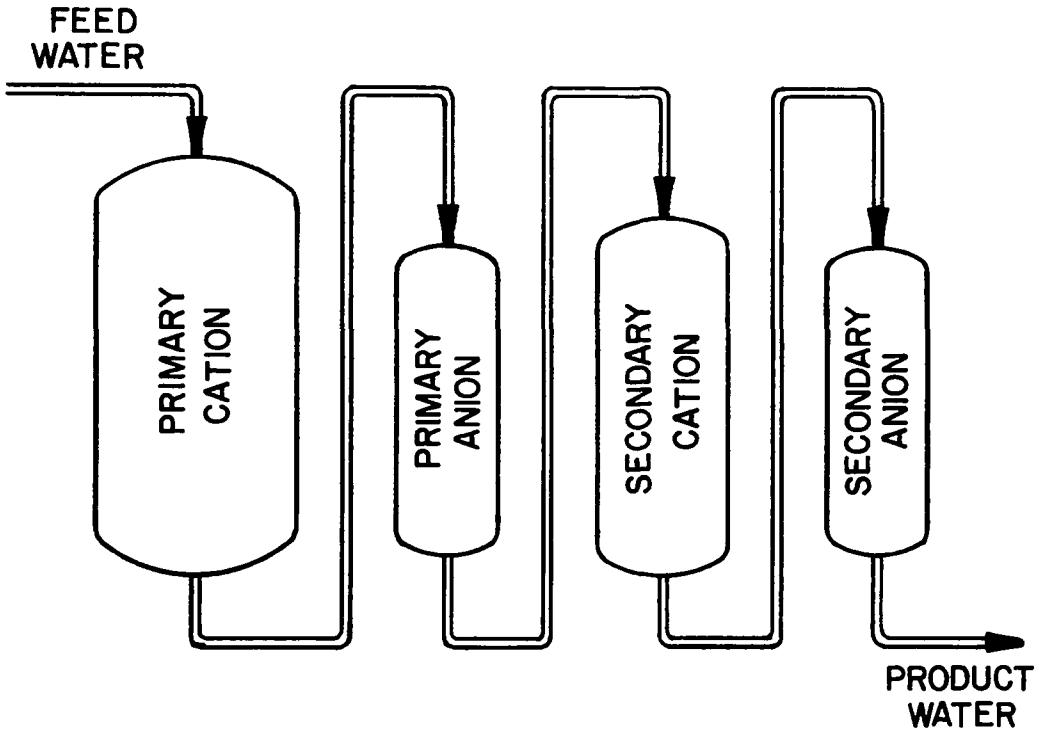

Figure I. Schematic flow diagram for demineralization cycle.

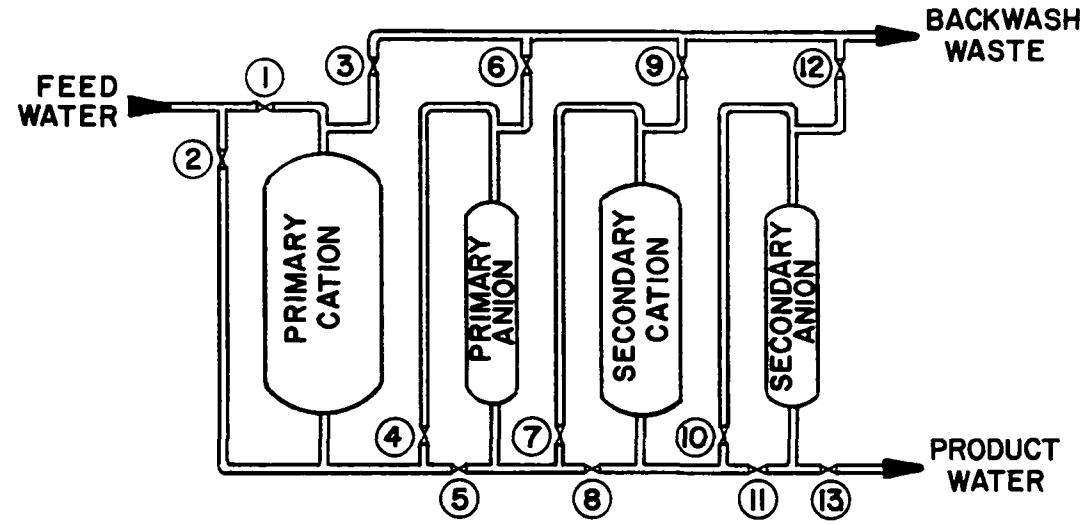

SEQUENCE OF BACKWASH

	NUMBER OF VALVE OPENED DURING BACKWASH CYCLE
SECONDARY ANION COLUMN :	1, 4, 7, 11, 12
SECONDARY CATION COLUMN:	1, 4, 8, 9
PRIMARY ANION COLUMN :	1, 5, 6
PRIMARY CATION COLUMN :	2, 3

Figure 2. Schematic flow diagram for backwash cycle.

Regeneration of the exhausted resin was performed in a downflow direction, with the regenerant passing through the secondary columns first and then through the primary columns. The cation columns were regenerated with a 4 percent sulfuric acid solution, while the anion columns were regenerated with a 4 percent ammonium hydroxide solution. Regeneration of the secondary columns first resulted in a higher state of regeneration for the secondary columns to ensure an effective removal of ions which were not removed in the primary columns due to a relatively low selectivity.

After regeneration, the excess regenerant solution should be rinsed from the resin beds prior to commencing a demineralization cycle. The first part of the rinsing operation, a slow rinse, was employed to force the regenerant solution from the secondary column through the primary column to complete the regeneration itself. The second part of the rinsing operation, a fast rinse, was employed to remove the excess regenerants from the primary cation and primary anion columns. The slow rinse operation was accomplished with demineralized water, at the same flow rate of the regenerant solution, while the fast rinse operation was accomplished with the feed water. The fast rinse flow rate can be much higher than the slow rinse flow rate. However, due to the limiting capacity of the feed pump in the pilot plant, the fast rinse flow rate for the primary cation column was actually slower than the slow rinse flow rate. A schematic flow diagram of the regeneration and rinsing operations is shown in Figure 3. The flow rates employed for each type of operation are shown in Table 3.

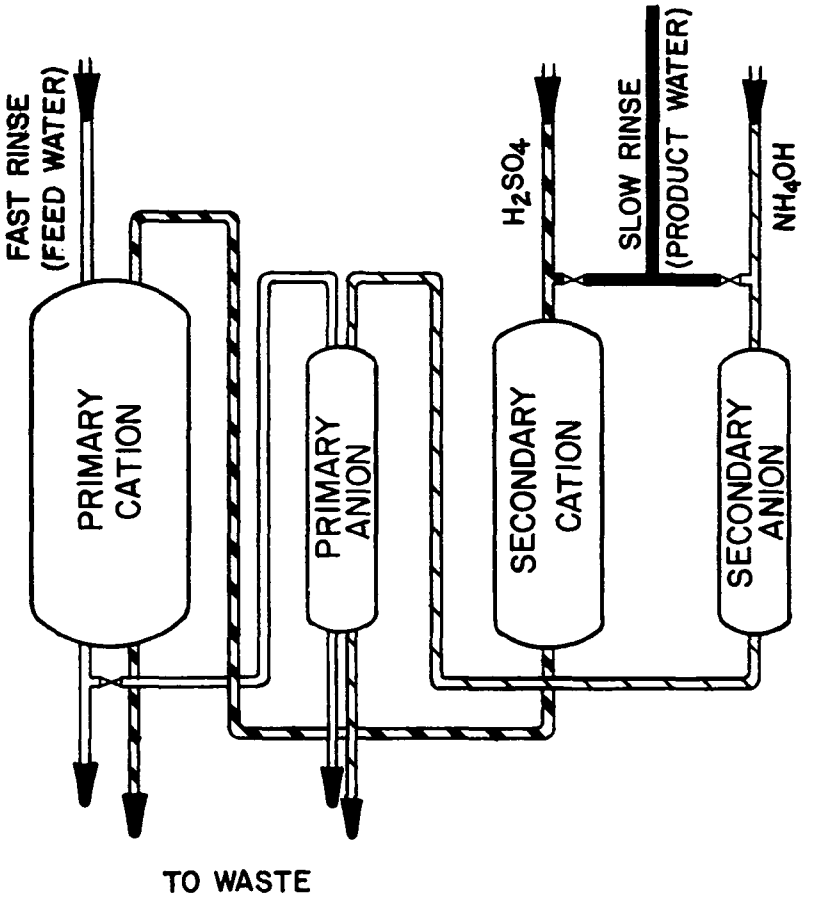

Figure 3. Schematic flow diagram for regeneration and rinsing cycles.

TABLE 3. TYPICAL OPERATING FLOW RATES FOR TWO-STAGE ION EXCHANGE PILOT PLANT

Operation Cycle	Primary Cation	Primary Anion	Secondary Cation	Secondary Anion
Demineralization				
gpm	2.5	2.5	2.5	2.5
gpm/sq ft	1.2	4.6	2.7	4.6
gpm/cu ft	0.3	1.6	0.8	1.6
Backwash				
gpm	5.0	2.0	2.0	2.0
gpm/sq ft	2.3	3.6	2.2	3.6
Regeneration				
gpm	5.6	1.6	5.6	1.6
gpm/cu ft	0.7	1.0	1.7	1.0
Slow Rinse				
gpm	5.6	1.6	5.6	1.6
gpm/cu ft	0.7	1.0	1.7	1.0
Fast Rinse				
gpm	5.0 *	4.0		
gpm/cu ft	0.6 *	2.5		

* Due to the limitation of pump capacity, the fast rinse flow rate was slower than the slow rinse flow rate.

1 gpm = 3.8 l/min; 1 gpm/sq ft = 40.7 lpm/sq m;
1 gpm/cu ft = 0.13 lpm/l

SECTION 5

PILOT PLANT RESULTS AND DISCUSSIONS

PRETREATMENT

It is desirable to minimize both suspended solids and organic substances in the feed water to an ion exchange system. Suspended solids will force the ion exchange column, particularly the primary cation column which is in the lead position, to act as a filter unit. This may lead to clogging of the resin bed and fouling of the resins. Soluble organic substances can adversely affect resin performance, especially the anion resins, by taking up ion exchange sites on the resins.

The pilot plant was supplied with a pretreatment unit consisting of lime coagulation and sand filtration. The secondary effluent from the Pomona Water Renovation Plant (an activated sludge process) was treated by this pretreatment unit prior to application on the primary cation column. In addition to the removal of suspended solids, the pretreatment unit was also designed for reducing the hardness and phosphate in the feed water by lime precipitation. However, the experimental results indicated that there was no significant savings in overall process cost for demineralizing Pomona secondary effluent by removing some hardness and phosphate prior to ion exchange process. Consequently, the original pretreatment unit was bypassed and a carbon adsorption system was used to pretreat the feed water as discussed in the following paragraph.

Initially, the removal of the soluble organic substances was to be accomplished by a carbon adsorption column located between the primary cation column and the primary anion column. This arrangement was to take advantage of the low pH value in the effluent from the primary cation column. Carbon adsorption is somewhat more efficient in treating water with a low pH value. However, considerable problems were encountered with leaching of iron and other metallic elements from the carbon with subsequent precipitation of these minerals in the primary anion column. Therefore, satisfactory operation of the carbon column at this location was never achieved. This situation, coupled with the fact that the chemical coagulation unit was not achieving a substantial reduction in hardness, prompted a

revision of the flow pattern after three months of operation. The chemical coagulation, sand filtration, and carbon adsorption units which were supplied with the ion exchange pilot plant were all bypassed, and the effluent from a 12.6 l/sec (200 gpm) carbon adsorption pilot plant at the same site was applied directly to the primary cation column. All data reported in this report were based on the revised pretreatment scheme.

REGENERATION EFFICIENCY vs. REGENERANT LEVEL

Since the regeneration process involves the application of expensive chemical regenerants, the efficiency of regeneration is an overwhelmingly important factor in process cost considerations. The regeneration efficiency and the regenerant level are defined in this report as follows:

Regeneration efficiency (%)

$$= \frac{\text{Total equivalents of ions removed from the feed water}}{\text{Total equivalents of regenerant applied}} \times 100$$

Regenerant level (g/l or lb/cu ft)

= Total weight of pure regenerant applied per unit volume of resins regenerated

A series of experiments was conducted to determine the relationship between the regenerant level and the regeneration efficiency for both cation and anion resins. The results of these tests are presented in Figure 4 and Figure 5 for the cation and anion exchange resins, respectively.

As indicated in both Figure 4 and Figure 5, the regeneration efficiency increased linearly as the regenerant level decreased for both the cation and anion resins over the range investigated. Since the regenerant level directly affects the product water quality, the regenerant level to be applied to a process cannot be selected simply on the basis of the results of the regeneration efficiency study. The relationship between the regenerant level and the product water quality was thus thoroughly investigated during the pilot plant study.

REGENERANT LEVEL vs. PRODUCT QUALITY

The product quality of the ion exchange process is indicated in this study by the average percentage of ion leakage in the product water. The average percentage of ion leakage for either cation or anion exchanger is defined as the ratio of the total equivalents of cations or anions remaining in the product water to the total equivalents of cations or anions in the feed water.

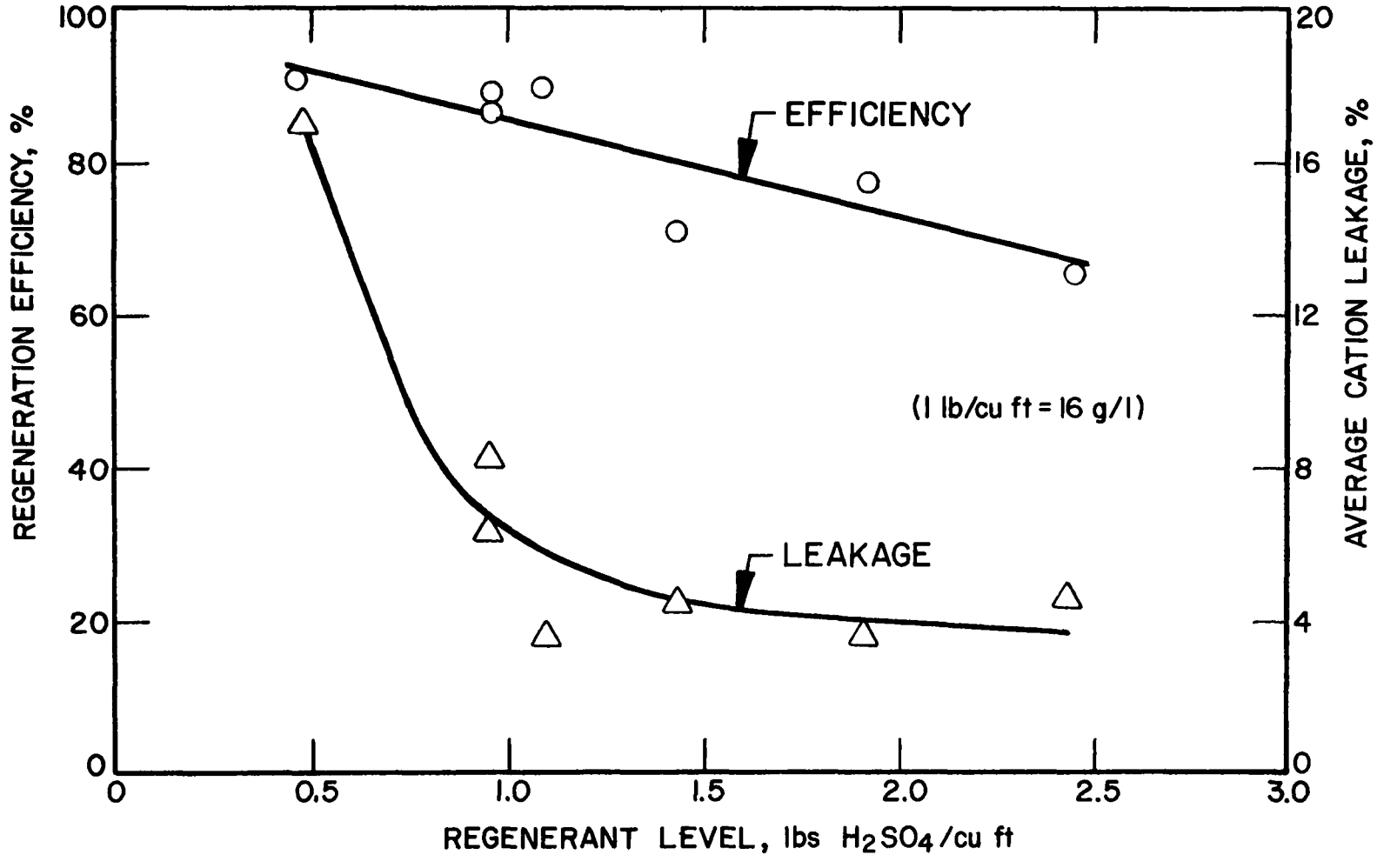

Figure 4. Regeneration study – cation exchange resin.

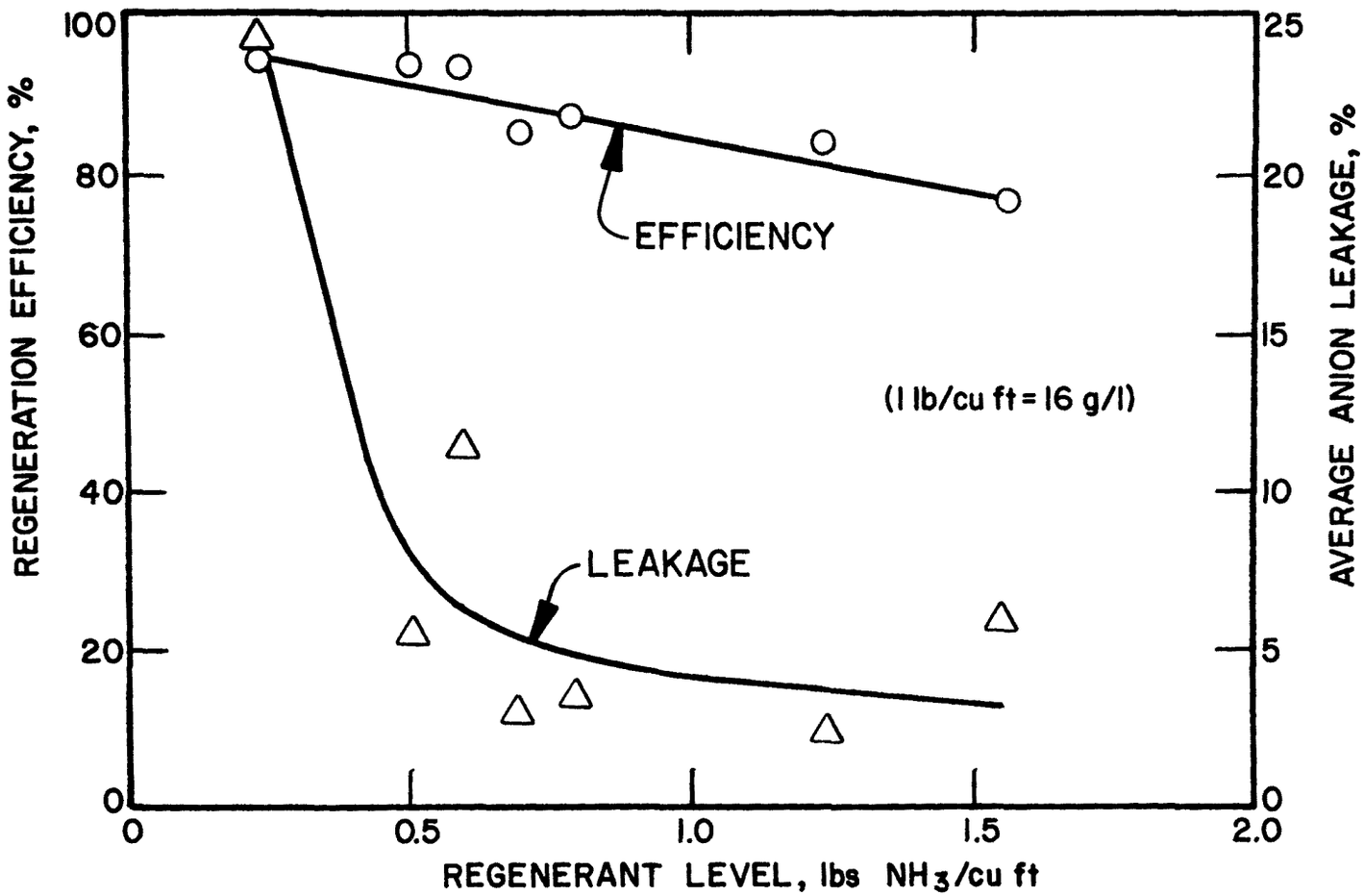

Figure 5. Regeneration study – anion exchange resin.

The results of this series of study are included in Figure 4 and Figure 5 for cation and anion resins, respectively. As clearly shown in these figures, both cation and anion leakage curves show a definite transition point where leakage levels off. The ion leakage is rapidly increased as the regenerant level decreases below a particular level. The leakage at this transition point is about 6 percent as indicated in both figures for cation and anion resins. The respective regenerant levels for cation and anion exchange resins at their transition points are about 17.6 g/l (1.1 lb/cu ft) of H_2SO_4 and 9.6 g/l (0.6 lb/cu ft) of NH_3. The regeneration levels correspond to regeneration efficiencies of 85 percent and 90 percent for cation and anion exchange resins, respectively.

Most ion exchange applications require that product water leakage be very low and thus demand a high regenerant level. However, this is not the case for demineralization of wastewater. The fact that ion leakages at the 6 percent level are perfectly acceptable has allowed the use of low regenerant levels to attain high efficiencies of regenerant utilization and thus has made the ion exchange process an economically promising method for wastewater demineralization.

DEMINERALIZATION FLOW RATE

The capital cost of an ion exchange system is greatly affected by the flow rate of feed water through the ion exchange columns in the demineralization cycle. If the demineralization flow rate, expressed as lpm/l (or gpm/cu ft), can be increased without degrading the product water quality, the required resin volume can be decreased.

To establish the maximum demineralization flow rate, tests were conducted for both the anion and cation resins. The cation resin experiment was accomplished using the small secondary cation column, instead of the large primary cation column, to allow a wider range of flow rate for the experiment with the existing feed pump. The effect of flow rate upon the anion resin was determined by using the primary anion column preceded by the primary cation column to simulate the full scale operation. The regenerant levels used for this flow rate study were about 17.6 g/l (1.1 lb/cu ft) of H_2SO_4 and 12.8 g/l (0.8 lb/cu ft) of NH_3 for cation and anion exchange resins, respectively. The flow rate was varied and the breakthrough capacity, expressed in equivalents, was determined for each flow rate. Breakthrough capacity was defined as the sum of the equivalents of ions removed within a demineralization cycle which was ended with a steep rise in the effluent cation or anion concentrations. The results of these tests are shown in Figure 6.

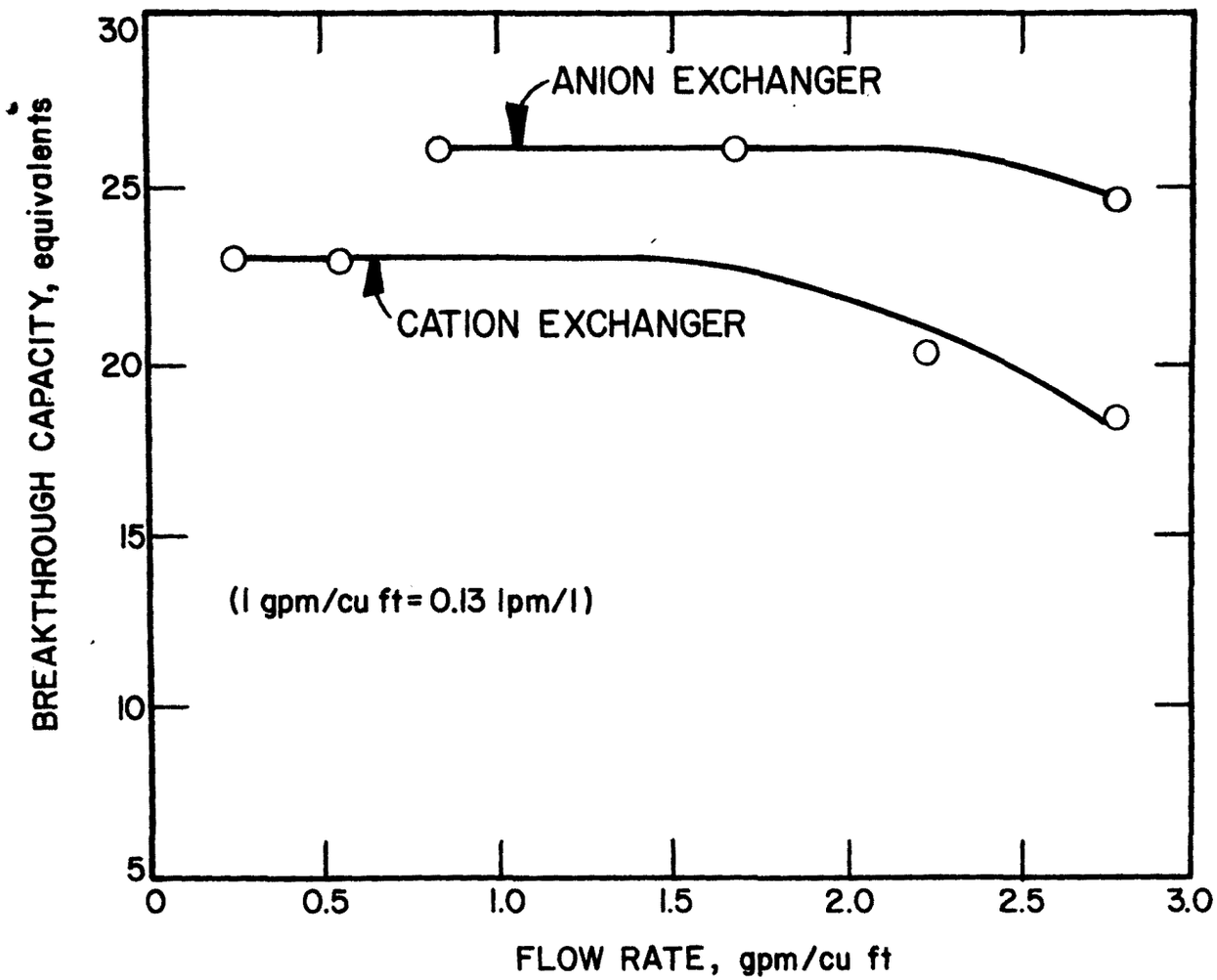

Figure 6. Effect of demineralization flow rate upon resin breakthrough capacity.

As shown in Figure 6, the cation breakthrough capacity decreased by 13 percent as the flow rate was increased from 0.13 lpm/l to 0.33 lpm/l (1.0 gpm/cu ft to 2.5 gpm/cu ft). The reduction in anion breakthrough capacity was shown to be only about 2 percent with the same range of flow rate increase from 0.13 lpm/l to 0.33 lpm/l (1.0 gpm/cu ft to 2.5 gpm/cu ft). The figure also indicates that the maximum flow rates for retaining the maximum breakthrough capacities at the selected regenerant levels are approximately 0.2 lpm/l (1.5 gpm/cu ft) and 0.26 lpm/l (2.0 gpm/cu ft) for cation and anion exchange resins, respectively.

The fact that the cation resin was more flow sensitive than the anion resin within the tested range was somewhat unexpected based on the technical data supplied by the resin manufacturer(3). However, the technical data were developed at considerably higher regenerant levels with better effluent water qualities. The substantially low regenerant level employed at this study was apparently responsible for the flow rate sensitivity displayed by the cation resin.

CARBON DIOXIDE REMOVAL

A series of investigations was conducted to determine the effect of carbon dioxide removal upon the overall performance of the ion exchange system. The carbon dioxide was removed by air stripping in an aeration tower installed between the primary cation and primary anion columns.

During this phase of the study, the flow rate through the ion exchange system was maintained at 9.5 l/min (2.5 gpm). The regenerant levels for the cation and anion resins were maintained at 17.6 g/l (1.1 lb/cu ft) of H_2SO_4 and 9.6 g/l (0.6 lb/cu ft) of NH_3, respectively. Under these operating conditions, the stripping tower was able to remove 90 percent of the carbon dioxide from the primary cation column effluent, which usually had a pH of about 2.7. The results of these experimental runs are summarized in Table 4. The column A and column B on Table 4 represent, respectively, the average of experimental data of the operations without and with carbon dioxide removal in the process. The regeneration conditions and flow rates were identical for both modes of operations.

As indicated in Table 4, the TDS reduction in both operations were about the same. However, the removal efficiencies for cations were either the same or significantly increased, while the removal efficiencies for anions were all slightly decreased as a result of 90 percent carbon dioxide removal from the primary cation column effluent. The carbon dioxide removal also slightly reduced the regeneration efficiency for the anion exchanger.

TABLE 4. EFFECTS OF CARBON DIOXIDE REMOVAL UPON THE SYSTEM PERFORMANCE

Parameter	Feed Water mg/l		Product Water mg/l		Removal %	
	A	B	A	B	A	B
Calcium	53	62	0.6	0.9	99	99
Magnesium	17	14	0.0	0.0	100	100
Sodium	126	107	15	7.8	88	93
Potassium	14	12	1.9	1.3	86	89
Ammonium (as N)	20	22	3.8	1.5	81	93
Sulfate	72	65	1.3	3.3	98	95
Chloride	135	113	14	14	90	88
Nitrate (as N)	2.9	1.2	0.35	0.27	88	78
Phosphate (as PO_4)	27	26	0.25	0.41	99	98
pH	7.4	7.6	5.8	6.8		
Conductivity(μmhos/cm)	1,040	980	100	60		
Alkalinity (as $CaCO_3$)	218	275	40	15		
TDS	610	540	70	65	89	88

Column A : without CO_2 removal.

Column B : with CO_2 removal.

Although the high degree of carbon dioxide removal was not found to improve the overall performance of the ion exchange system during its demineralization cycle, the carbon dioxide removal did solve some minor foaming problems involved in the regeneration operation when carbon dioxide removal was not practiced.

At the end of the above carbon dioxide removal study, the location of the aeration tower was moved down to the end of the ion exchange system. The product water from the ion exchange system was pumped through the aeration tower in an attempt to raise the pH of the product water by the removal of carbon dioxide from the product water. The results showed that the aeration tower could raise the pH of the product water from pH 5.9 to pH 6.8.

WEAK ACID CATION EXCHANGE RESIN

Since a weak acid cation exchange resin could be regenerated more efficiently than a strong acid cation exchange resin with a subsequent savings in acid consumption cost, it was of great interest to investigate the applicability of a weak acid cation exchange resin to the wastewater demineralization system. The particular weak acid cation exchange resin selected for this study was the Rohm & Haas IRC-84 resin. This resin contained carboxylic acid functional groups whereas the strong acid cation exchange resin, C-20. contained sulfonic acid functional groups.

According to the following reaction equations, the strong acid cation exchange resin, represented as $R\text{-}SO_3H$, is capable of removing cation associated with any anion by an equivalent exchange for hydrogen ion. However, the weak acid cation exchange resin, represented as R-COOH, can only effectively remove cation associated with bicarbonate ion.

A. Strong acid cation exchange resin:

$$R\text{-}SO_3H + NaCl \rightleftharpoons R\text{-}SO_3Na + HCl$$

$$2R\text{-}SO_3H + Ca(HCO_3)_2 \rightleftharpoons (R\text{-}SO_3)_2Ca + 2H_2O + 2CO_2$$

B. Weak acid cation exchange resin:

$$R\text{-}COOH + NaCL \rightleftharpoons R\text{-}COONa + HCl$$

$$2R\text{-}COOH + Ca(HCO_3)_2 \rightleftharpoons (R\text{-}COO)_2Ca + 2H_2O + 2CO_2$$

Because of the limited capability of the weak acid cation exchange resin in cation removal, a combination of weak acid

cation exchange resin and strong acid cation exchange resin was employed in this study to remove all forms of cations as completely as possible. The original strong acid cation exchange resin, C-20, in the primary cation column was replaced with a new IRC-84 weak acid cation exchange resin, while the original C-20 strong acid cation exchange resin in the secondary cation column was retained for the combined system. The resin volume in the primary cation column was reduced from its previous 0.23 cu m (8 cu ft) to 0.17 cu m (6 cu ft) to provide adequate freeboard in the column for resin bed expansion during backwashing. However, the total amount of sulfuric acid used for the regeneration of this combined system was maintained at the same level as used in previous straight strong acid cation exchange resin system, which resulted in a slight increase of the regenerant level from 17.6 g/l (1.1 lb/cu ft) to 20.8 g/l (1.3 lb/cu ft) of H_2SO_4 for the combined cation exchange system.

The flow patterns and concentrations of regenerants for the regeneration of both cation and anion exchange resin columns are shown in Figure 7. As indicated in the figure, the 4 percent sulfuric acid solution was first pumped through the secondary cation column to regenerate the strong acid cation exchange resin. The partially spent regenerant from the secondary cation column was collected in a dilution tank to reduce the concentration down to the level of 0.5 percent. This diluted acid was then pumped through the primary cation column for the regeneration of the weak acid cation exchange resin. This dilution step was necessary to prevent precipitation of calcium sulfate within the weak acid cation exchange resin bed.

During the course of this study, two different demineralization flow schemes were investigated. In the first flow scheme, the primary anion exchange column (with A-30B anion exchange resin) remained at the second position between the primary cation exchange column (with IRC-84 cation exchange resin) and the secondary cation exchange column (with C-20 cation exchange resin) as shown in Figure 8-a. In the second flow scheme, the secondary cation exchange column was placed directly after the primary cation exchange column as shown in Figure 8-b. Although the demineralization flow scheme was different during this study, identical regeneration conditions as shown in Figure 7 were employed throughout the entire series of weak acid cation exchange resin study. The results are discussed in the following sections with respect to different flow schemes.

Phase One (IRC-84→A-30B→C-20→A-30B Flow Scheme)

The average water quality achieved by each ion exchange column in this flow scheme is shown in Table 5. As indicated in the table, the weak acid cation exchange column effectively

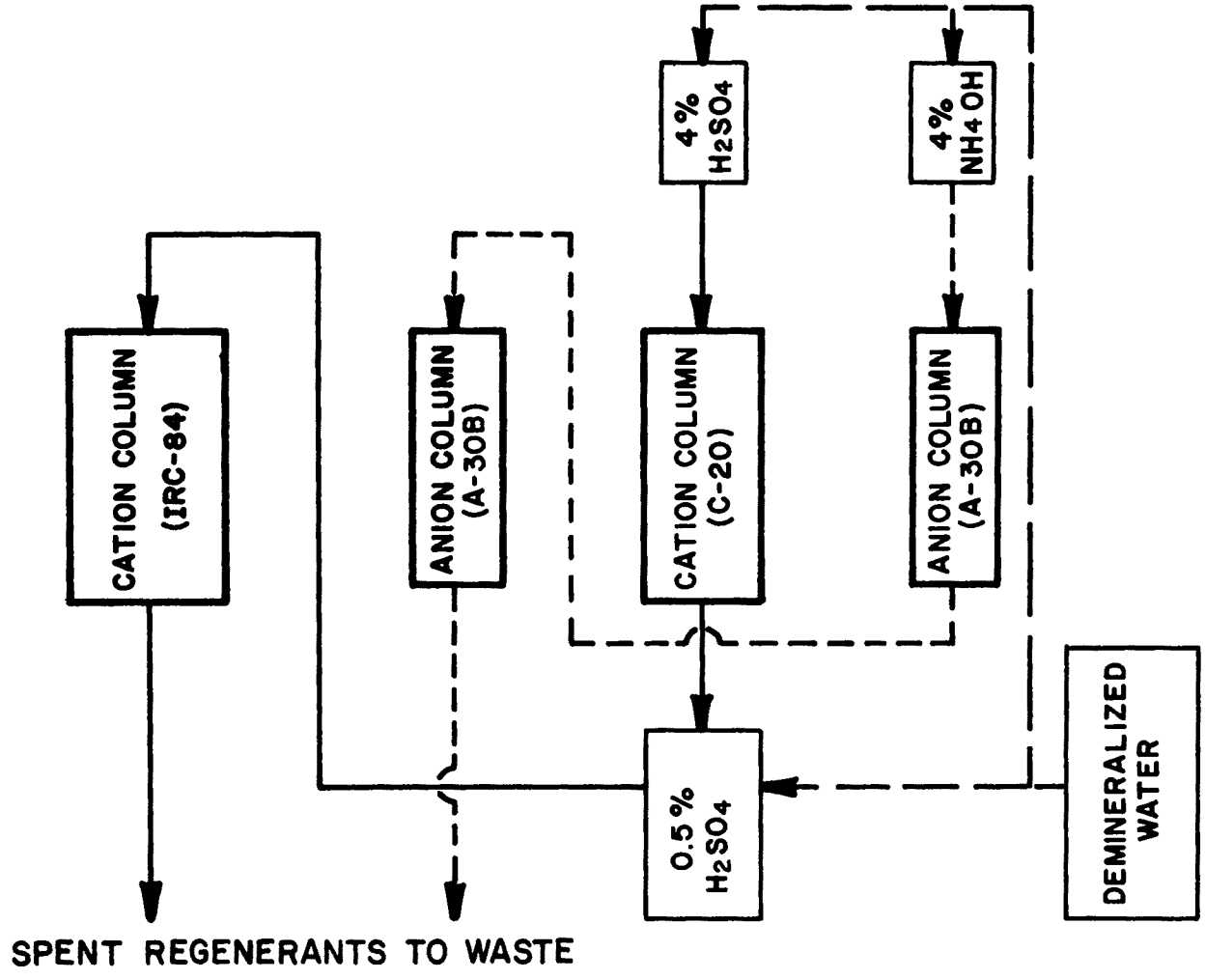

Figure 7. Schematic regeneration flow diagram for weak acid cation exchange resin study.

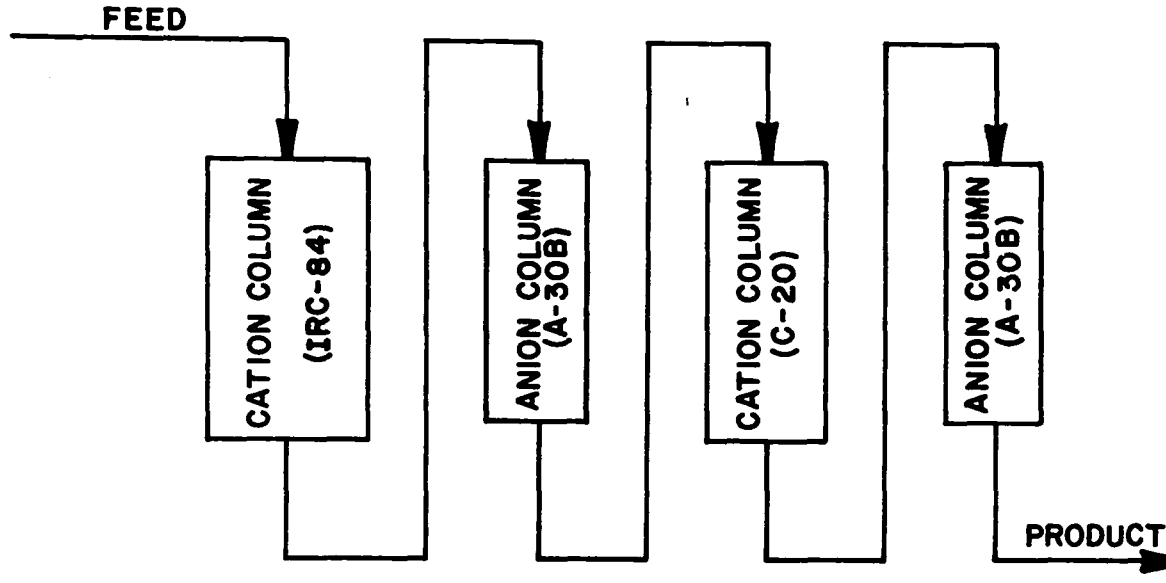

(a) SCHEMATIC DEMINERALIZATION FLOW DIAGRAM IN PHASE ONE

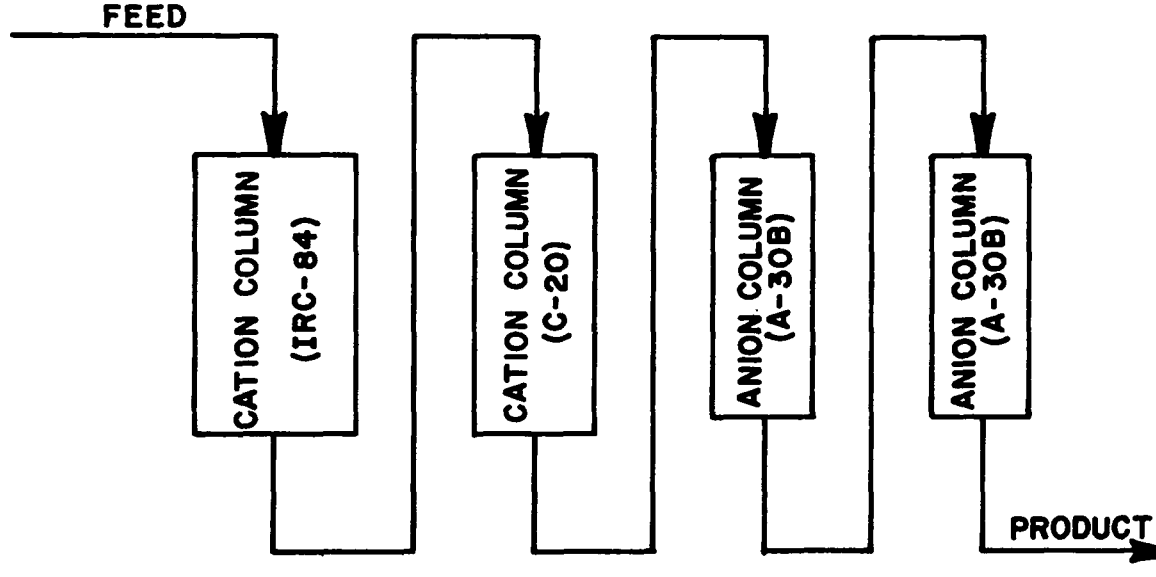

(b) SCHEMATIC DEMINERALIZATION FLOW DIAGRAM IN PHASE TWO

Figure 8. Schematic demineralization flow diagram for weak acid cation exchange resin study.

TABLE 5. WATER QUALITY CHARACTERISTICS IN PHASE ONE WEAK ACID CATION EXCHANGE RESIN STUDY

Parameter (mg/l)		Carbon-Treated Secondary Effluent	Primary Cation Column Effluent	Primary Anion Column Effluent	Secondary Cation Column Effluent	Secondary Anion Column Effluent
Calcium		68	7.0	7.6	1.3	1.1
Magnesium		14	0.64	0.61	0.20	0.14
Sodium		122	95	85	29	29
Potassium		12	7.1	7.2	2.4	2.4
Ammonium	(as N)	9.7	8.8	8.8	3.0	3.1
Sulfate		74	74	2.2	2.0	0.80
Chloride		140	130	167	165	28
Nitrate	(as N)	3.9	3.2	3.6	3.7	1.6
Phosphate	(as PO_4)	34	33	27	27	3.8
pH		7.4	3.4	4.9	2.7	5.7
Conductivity	(μmhos/cm)	1,030	830	620	1,570	178
Alkalinity	(as $CaCO_3$)	234		10		45
Acidity	(as $CaCO_3$)		35		179	
TDS		591				98

removed the calcium and magnesium bivalent ions. However, its capability in removing the monovalent ions, such as sodium, potassium, and ammonium ions, was extremely poor in this study. The total removal of the cations by the weak acid cation exchanger, IRC-84, was about 5.5 equivalents which represented about 51 percent of the total cations in the feed water. This removal efficiency was lower than the 68 percent efficiency as achieved by the strong acid cation exchanger, C-20, under equivalent conditions of operation. The lower removal efficiency by the weak acid cation exchanger was primarily due to its limiting exchange capacity as effected by the concentration of the bicarbonate ion in the feed water, which approximately amounted to 4.7 equivalents in this study. According to the data in Table 5, the weak acid cation exchanger was able to remove only about 0.8 equivalents of cations beyond the effective limit of the 4.7 equivalents set by the bicarbonate ions in the feed water. This additional 0.8 equivalents of cations were believed to be mostly associated with sulfate ions.

According to the ion removal mechanisms of a weak base anion exchanger, such as the A-30B in this application, the total amount of anion removed by the A-30B resins in the primary anion exchange column in this study would be more or less limited to the 0.8 equivalents of sulfate ions in the form of H_2SO_4. However, a close check of the sulfate ion removal by the primary anion exchanger revealed that a total of 1.5 equivalents of sulfate ions were removed as indicated in Table 5. The unexpected additional removal between 1.5 equivalents and 0.8 equivalents might have been achieved by an exchange mechanism, instead of adsorption, as evidenced by the almost equivalent increase of the chloride ions in the primary anion column effluent. The chloride ions replaced by the sulfate ions were possibly left on the anion exchanger from previous operations. This special chloride and sulfate ion exchange phenomenon was not observed when strong acid cation exchanger, instead of weak acid cation exchanger, was used in the primary cation exchange column. The reason for the special behavior is not known. However, it is believed that the exchange process between the sulfate ions in the water and chloride ions remaining on the anion exchange resins could be minimized if the active ionic forms available on the anion exchange resins would be all of free base.

Table 6 shows the comparison of the performance of the ion exchange pilot system between two different modes of operations. The TDS reduction was decreased from 88 percent to 84 percent when weak acid cation exchange resin was used to replace the strong acid cation exchange resin in the primary cation column. Since the resin regeneration efficiency was defined in this study as the ratio of the total equivalents of ions removed from

TABLE 6. COMPARISON OF THE PERFORMANCE OF THE TWO-STAGE ION EXCHANGE SYSTEM BETWEEN TWO DIFFERENT MODES OF OPERATIONS (WEAK ACID RESIN STUDY - PHASE ONE)

Parameter		Feed Water mg/l		Product Water mg/l		Removal %	
		A	B	A	B	A	B
Calcium		62	68	1.3	1.1	98	98
Magnesium		15	14	0.0	0.14	100	99
Sodium		127	122	9.6	29	92	76
Potassium		12	12	2.4	2.4	80	80
Ammonium	(as N)	18	9.7	1.7	3.1	91	68
Sulfate		65	74	0.99	0.80	99	99
Chloride		131	140	7.8	28	94	80
Nitrate	(as N)	3.9	3.9	0.59	1.6	85	59
Phosphate	(as PO_4)	37	34	0.25	3.8	99	89
pH		7.5	7.4	5.9	5.7		
Conductivity	(μmhos/cm)	980	1,030	70	178		
Alkalinity	(as $CaCO_3$)	250	234	26	45		
TDS		594	591	70	98	88	84

Column A : with C-20 resin in the primary cation column.

Column B : with IRC-84 resin in the primary cation column

the feed water to the total equivalent of regenerant applied, the calculated regeneration efficiency for the combined cation exchanger was significantly reduced from 85 to 80 percent as a result of the limiting capacity of the weak acid cation exchanger in removing total cations. The fact that the weak acid cation exchanger accomplished an unfavorably lower regeneration efficiency in this study has disregarded the possible savings in regenerant consumption to restore the exchange capacity in a weak acid cation exchanger.

Phase Two (IRC-84→C-20→A-30B→A-30B Flow Scheme)

The average water qualities of the various column effluents are shown in Table 7. Only about 25 percent of the sodium, potassium, and ammonium ions was removed by the weak acid cation exchanger as indicated in Table 7. This led to a high slippage of monovalent cations from the weak acid cation exchanger, and thus it caused substantial increase of the cation loading on the strong acid cation exchanger. Since the total regenerant applied to the strong acid cation exchanger was maintained at the same value, the increase of the cation loading would directly increase the ion leakage from the strong acid cation exchanger. The results indicated that cation leakage of 17.2 percent was obtained from this combined system, while it was only about 6.5 percent for the previous straight strong acid cation exchanger system. The anion leakage for this combined system was also increased from previous 7.5 percent to 19 percent as a result of the unusual chloride and sulfate ion exchange phenomenon. The comparable overall cation and anion leakage values for the operations in the aforementioned phase one study were about 15 percent and 17 percent, respectively.

The TDS removal in this study was decreased from previous 88 percent to 80 percent as indicated in Table 8, which was a larger reduction than that of the phase one study. However, the regeneration efficiency for the overall cation exchanger was slightly improved from 80 percent in phase one study to 82 percent in this phase two study. The anion exchanger was still maintained at the usual 90 percent level in this study.

In summary, all the experimental results obtained from both phases of the study on the weak acid cation exchanger substantiated the conclusion that a combined weak and strong acid cation exchange resin system was less effective than an entire strong acid cation exchange resin system for wastewater demineralization.

EFFECT OF INFLUENT TDS

Following the conclusion of the study on the weak acid cation exchange resin, another study was initiated to investigate the

TABLE 7. WATER QUALITY CHARACTERISTICS IN PHASE TWO WEAK ACID CATION EXCHANGE RESIN STUDY

Parameter (mg/l)		Carbon-Treated Secondary Effluent	Primary Cation Column Effluent	Secondary Cation Column Effluent	Primary Anion Column Effluent	Secondary Anion Column Effluent
Calcium		62	7.6	1.3	3.7	2.5
Magnesium		13	0.45	0.0	0.0	0.0
Sodium		120	91	30	33	31
Potassium		13	8.3	3.5	3.7	3.4
Ammonium	(as N)	12	8.1	2.8	2.8	3.5
Sulfate		77	82	84	4.9	0.63
Chloride		118	123	122	158	34
Nitrate	(as N)	2.7	2.0	2.3	2.6	1.2
Phosphate	(as PO_4)	36	33	29	33	3.2
pH		7.6	3.4	2.7	2.8	5.9
Conductivity	(μmhos/cm)	887	743	1,568	1,307	170
Alkalinity	(as $CaCO_3$)	231				44
Acidity	(as $CaCO_3$)		35	204	159	
TDS		568				112

TABLE 8. COMPARISON OF THE PERFORMANCE OF THE TWO-STAGE ION EXCHANGE SYSTEM BETWEEN TWO DIFFERENT MODES OF OPERATIONS (WEAK ACID RESIN STUDY - PHASE TWO)

Parameter		Feed Water mg/l		Product Water mg/l		Removal %	
		A	B	A	B	A	B
Calcium		62	62	1.3	2.5	98	96
Magnesium		15	13	0.0	0.0	100	100
Sodium		127	120	9.6	31	92	74
Potassium		12	13	2.4	3.4	80	73
Ammonium	(as N)	18	12	1.7	3.5	91	71
Sulfate		65	77	0.99	0.63	99	99
Chloride		131	118	7.8	34	94	71
Nitrate	(as N)	3.9	2.7	0.59	1.2	85	53
Phosphate	(as PO_4)	37	36	0.25	3.2	99	95
pH		7.5	7.6	5.9	5.9		
Conductivity	(μmhos/cm)	980	887	70	170		
Alkalinity	(as $CaCO_3$)	250	231	26	44		
TDS		594	568	70	112	88	80

Column A : with C-20 resin in the primary cation column.

Column B : with IRC-84 resin in the primary cation column.

effects of influent TDS upon the various performance parameters of the two-stage ion exchange system. The weak acid cation exchange resin, IRC-84, was removed from the primary cation column and replaced by the original C-20 strong acid cation exchange resin. The flow sequence of the resin columns in the demineralization cycle was reverted to its original pattern as shown in Figure 1.

In addition to the normal 610 mg/l TDS level in Pomona wastewater, two higher TDS levels were also investigated in this study. These higher TDS feed waters were artificially obtained by adding the appropriate amount of chemicals into the carbon-treated secondary effluent from Pomona activated sludge plant. The average water characteristics of the three different TDS feed waters, namely 610 mg/l, 1,150 mg/l, and 1,640 mg/l, are shown in Table 9 through Table 11. The amount of each individual ion to be added to increase the TDS in the feed waters was determined by the average concentration of that ion in some typical wastewaters which had the TDS values about the same levels as used in this study.

The same regeneration flow patterns as shown in Figure 3 were employed for both cation and anion exchangers throughout this study. The regenerant levels for the cation and anion exchangers were maintained at 17.6 g/l (1.1 lb/cu ft) of H_2SO_4 and 9.6 g/l (0.6 lb/cu ft) of NH_3, respectively. Since both resin volumes and regenerant levels were not increased in accordance with the increase of the influent TDS, the volume of the product water for the demineralization cycle was thus reduced from 9,080 liters (2,400 gallons) for 610 mg/l TDS feed water to 4,540 liters (1,200 gallons) and 3,560 liters (940 gallons) for the higher TDS feed waters of 1,150 mg/l and 1,640 mg/l, respectively. The demineralization flow rate was increased from 9.5 lpm (2.5 gpm) for operation with 610 mg/l TDS feed water to 15 lpm (4 gpm) for operations with the two higher TDS feed waters. This increase in the feed rate would allow the entire operation run for the higher TDS feed waters to be easily monitored during the normal daytime working hours. From Figure 6 and Table 3, it is evident that this higher flow rate would not significantly affect the resin performance.

The performance of each individual column of the two-stage ion exchange system for this study is shown, respectively, in Table 9 through Table 11 for 610 mg/l, 1,150 mg/l, and 1,640 mg/l feed waters. Further analyses of the experimental data are made to demonstrate the effects of the influent TDS upon the various performance parameters as shown in Table 12. The effects of influent TDS upon TDS removal and the residual TDS in the product water are also illustrated in Figure 9.

TABLE 9. PERFORMANCE OF THE TWO-STAGE ION EXCHANGE SYSTEM OPERATING ON 610 mg/l TDS FEED WATER

Parameter (mg/l)		Carbon Column Effluent	Primary Cation Effluent	Primary Anion Effluent	Secondary Cation Effluent	Secondary Anion Effluent	Total Removal %
Calcium		53	2.0	1.7	1.1	0.60	99
Magnesium		17	0.59	0.56	0.38	0.0	100
Sodium		126	61	59	16	15	88
Potassium		14	7.3	7.1	1.9	1.9	86
Ammonium	(as N)	20	9.6	9.2	4.0	3.8	81
Sulfate		72	72	3.6	3.6	1.3	98
Chloride		135	132	84	83	14	90
Nitrate	(as N)	2.9	2.8	1.6	1.5	0.35	88
Phosphate	(as PO_4)	27	27	15	14	0.25	99
pH		7.4	2.7	5.7	2.8	5.8	
Conductivity	(μmhos/cm)	1,040	1,390	390	1,040	100	90
TDS		610	298	198	104	70	89
Alkalinity	(as $CaCO_3$)	218		51		39	
Acidity	(as $CaCO_3$)		110		110		

TABLE 10. PERFORMANCE OF THE TWO-STAGE ION EXCHANGE SYSTEM OPERATING ON 1,150 mg/l TDS FEED WATER

Parameter (mg/l)		Carbon Column Effluent	Primary Cation Effluent	Primary Anion Effluent	Secondary Cation Effluent	Secondary Anion Effluent	Total Removal %
Calcium		105	3.1	3.2	0.12	0.10	100
Magnesium		30	0.94	0.98	0.01	0.01	100
Sodium		265	134	134	28	28	89
Potassium		40	20	21	3.9	4.0	90
Ammonium	(as N)	14	7.5	7.7	1.8	2.1	85
Sulfate		175	185	24	26	1.0	99
Chloride		347	337	167	167	27	92
Nitrate	(as N)	7.9	7.5	4.6	4.7	1.5	81
Phosphate	(as PO_4)	27	26	18	17	0.49	98
pH		7.1	2.7	5.5	2.9	5.9	
Conductivity	(μmhos/cm)	2,020	3,480	830	1,810	163	92
TDS		1,150				98	92
Alkalinity	(as $CaCO_3$)	278		55		49	
Acidity	(as $CaCO_3$)		344		193		

TABLE 11. PERFORMANCE OF THE TWO-STAGE ION EXCHANGE SYSTEM OPERATING ON 1,640 mg/l TDS FEED WATER

Parameter (mg/l)		Carbon Column Effluent	Primary Cation Effluent	Primary Anion Effluent	Secondary Cation Effluent	Secondary Anion Effluent	Total Removal %
Calcium		140	4.3	4.3	0.24	0.21	100
Magnesuum		47	1.8	1.8	0.09	0.09	100
Sodium		343	166	166	63	63	82
Potassium		62	35	36	13	14	77
Ammonium	(as N)	33	20	20	8.3	8.3	75
Sulfate		221	227	18	17	1.6	99
Chloride		510	495	468	465	88	83
Nitrate	(as N)	2.1	1.4	1.7	1.6	0.57	72
Phosphate	(as PO_4)	29	28	28	28	10	65
pH		7.8	2.2	2.6	2.1	6.1	
Conductivity	(μmhos/cm)	2,740	4,750	3,090	4,760	516	81
TDS		1,643				238	86
Alkalinity	(as $CaCO_3$)	409				51	
Acidity	(as $CaCO_3$)		464	232	502		

TABLE 12. EFFECTS OF THE INFLUENT TDS UPON THE TWO-STAGE ION EXCHANGE SYSTEM PERFORMANCE

Parameter	610 mg/l TDS	1,150 mg/l TDS	1,640 mg/l TDS
TDS Removal, %	89	92	86
Cation Exchanger Regeneration Efficiency, %	85	82	85
Anion Exchanger Regeneration Efficiency, %	90	93	95
Ratio of Brine to Product Water (Without Brine Recycling)	0.11	0.22	0.28
Ratio of Brine to Product Water (With Brine Recycling)	0.07	0.15	0.18
Estimated Water Recovery* (With Brine Recycling), %	93	87	85

$$* \text{ Water Recovery } (\%) = \frac{(\text{Product Volume})}{(\text{Total Feed Volume})} \times 100$$

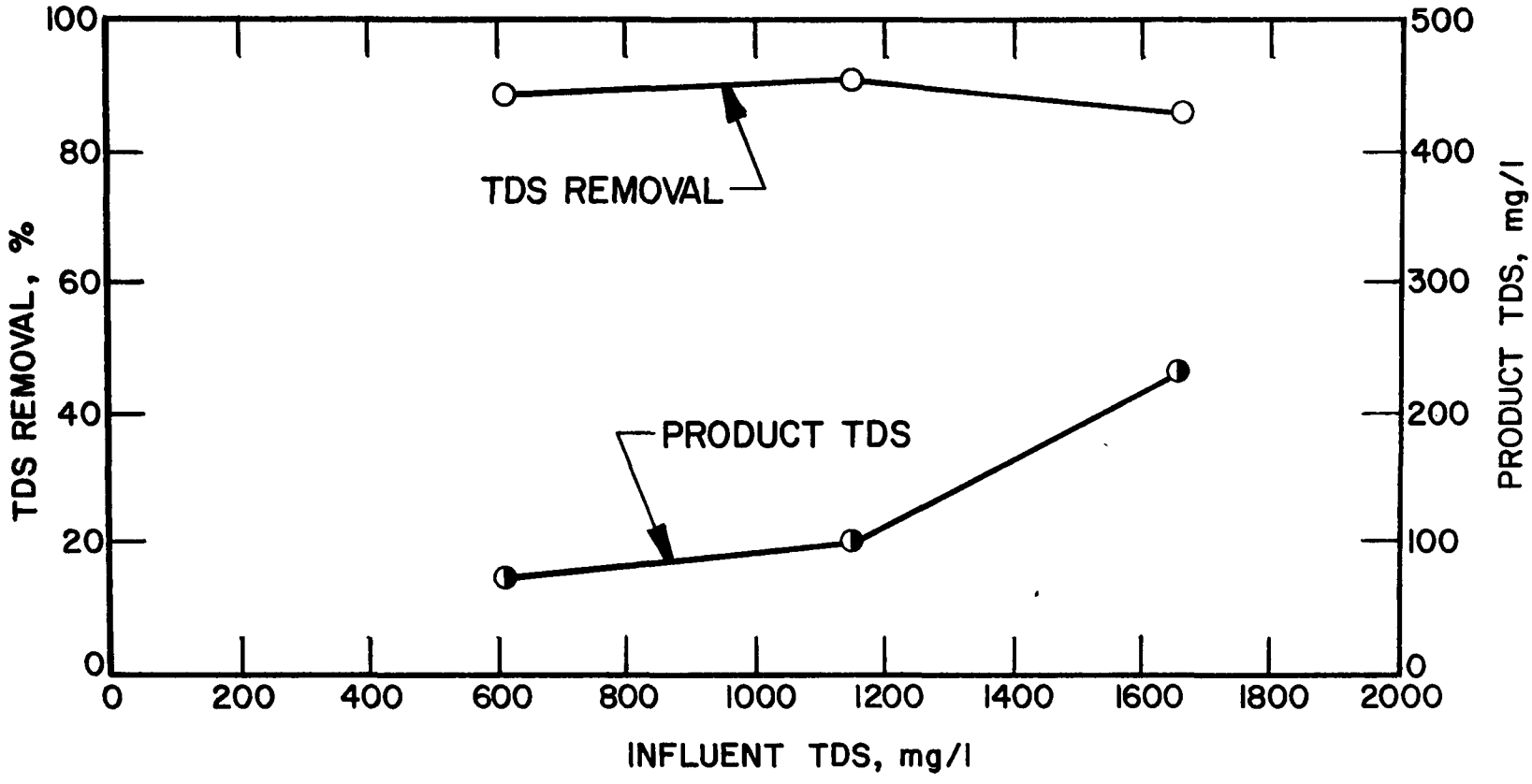

Figure 9. Effects of influent TDS upon TDS removal and product TDS.

As indicated in both Table 12 and Figure 9, the two-stage ion exchange system seemed able to achieve similar degree of TDS removal and regeneration efficiency under the same typical operating conditions within the investigated range of influent TDS values. However, the ratio of the brine volume to the product water volume was much higher for 1,640 mg/l feed water than the 610 mg/l feed water. By brine recycling, the brine volume for each of the three different TDS feed waters could be reduced about 30 to 40 percent. This would improve the water recovery for the 1,640 mg/l TDS feed water to the desirable level of 85 percent.

BRINE CHARACTERISTICS

The ion exchange system generated reject streams from backwashing, regeneration, and rinsing operations. Among these reject streams, the backwash waste could be reclaimed by recycling through the pretreatment system (carbon adsorption) to remove the small amount of suspended solids. However, the reject streams from the regeneration and rinsing operations contained undesirable levels of organic materials and inorganic constituents. These two streams were discharged together and were classified as the brine from the ion exchange system. An analysis of the brine from a typical operation with the C-20→A-30B→C-20→A-30B flow scheme on the Pomona carbon-treated secondary effluent is presented in Table 13. Disposal of the brines from both cation and anion exchangers was not investigated at Pomona. Therefore, the cost of brine disposal is not included in the cost estimates provided in this report although it is recognized that the cost of brine disposal may be a major component of the total cost in some particular systems.

Considerable effort was devoted to minimizing the volume of the various reject streams. As a result of an extensive series of tests on the Pomona wastewater, which had a normal TDS level of 610 mg/l, the appropriate volume for each operating sequence was determined as shown in Table 14. The total reject stream volume, including backwash, spent regenerant, and rinsing waste, amounted to about 15 percent of the product water. Since the backwash water could be recycled, however, disposal of only the spent regenerant and rinsing waste was necessary. These reject streams, which were classified as brine, amounted to about 11 percent of the product flow. The brine volumes for other higher TDS feed waters investigated in this study are shown in Table 12.

BRINE RECYCLING

There were two major areas of interest in pursuing the study of brine recycling. The primary interest was to reduce

TABLE 13. CHARACTERISTICS OF BRINES FROM THE CATION AND ANION EXCHANGE COLUMNS *

Parameter (mg/l)		Cation Exchange Columns	Anion Exchange Columns
Calcium		500	8
Magnesium		310	0
Sodium		1,430	70
Potassium		240	20
Ammonium	(as N)	280	2,340
Sulfate		6,600	3,200
Chloride		30	2,080
Nitrate	(as N)	3	100
Phosphate	(as PO_4)	15	820
Total Hardness	(as $CaCO_3$)	2,520	20
Alkalinity	(as $CaCO_3$)		1,750
Acidity	(as $CaCO_3$)	950	
Total Solids		9,400	7,590
pH		2.2	7.3
Conductivity	(μmhos/cm)	11,400	17,000
Turbidity	(JTU)	2.5	1.5
Color	(color unit)	6	28
Chemical Oxygen Demand	(COD)	15	200

* Brine includes spent regenerant, slow rinse water, and fast rinse water.

TABLE 14. MINIMUM REJECT STREAMS PER CYCLE OF REGENERATION

Source of Reject Stream	Backwash Water (gallons)	Spent Regenerant (gallons)	Slow Rinse Water (gallons)	Fast Rinse Water (gallons)
Cation Exchange System				
Primary Column	75			75
Secondary Column	4			
Combined Flow		35	75	
Anion Exchange System				
Primary Column	4			30
Secondary Column	4			
Combined Flow		5	45	
Sub-Total	87	40	120	105

NOTES:

1. Product water per cycle = 2,400 gallons (9,120 liters).
2. 1 gallon = 3.8 liters.

the volume of brine waste to minimize the cost of brine disposal. The secondary interest was to improve the water recovery for the ion exchange process to reduce the process cost. Some cost savings for the regenerants could also be secured by a successful brine recycling practice.

During brine recycling study, the regenerant levels for both the cation and anion exchange columns were maintained at 17.6 g/l (1.1 lb/cu ft) of H_2SO_4 and 9.6 g/l (0.6 lb/cu ft) of NH_3, respectively.

The typical pilot plant operation flow rates as shown in Table 3 were used in this study. Extensive studies were first conducted to characterize the brine during the process of the regeneration operation. The results of these studies were employed to decide what portions of the brine flow could be retained for recycling. Figure 10 and Figure 11 represent the typical distributions of the major impurity ions in the brines from both cation and anion exchangers, respectively. Generally speaking, the central portions of both brine streams all contained exceptionally high concentrations of impurity ions. These were definitely not suitable for recycling. According to the brine characteristics as illustrated in Figure 10 and Figure 11, a typical zoning diagram such as Figure 12 could be prepared to dictate the various reuses of the recycled brines.

Figure 13 and Figure 14 show the two different modes of regeneration in terms of the brine handling. The numbers indicated in the parentheses were the average volumes of waters flowing through those specific lines during each cycle of regeneration operation. According to these two schematic flow diagrams, the water recoveries for processes with brine recycling and without brine recycling were about 93 percent and 89 percent, respectively. It is also indicated in the figures that the total volume of waste brine was greatly reduced from 1000 liters (265 gallons) per cycle to 660 liters (175 gallons) per cycle, a reduction of 34 percent, as a result of the recycling of part of the brine produced in the regeneration operation.

The average qualities of the various effluents from the two-stage ion exchange system during this study of brine recycling are shown in Table 15. Additional experimental results are also presented in Table 16 to demonstrate the effects of brine recycling upon various process parameters. As shown in both Table 15 and Table 16, the quality of the product water and the system performance were not deteriorated by brine recycling. The achievement of good product quality and system performance as well as the improvement in the water recovery and in the brine waste volume reduction seemed to make the brine

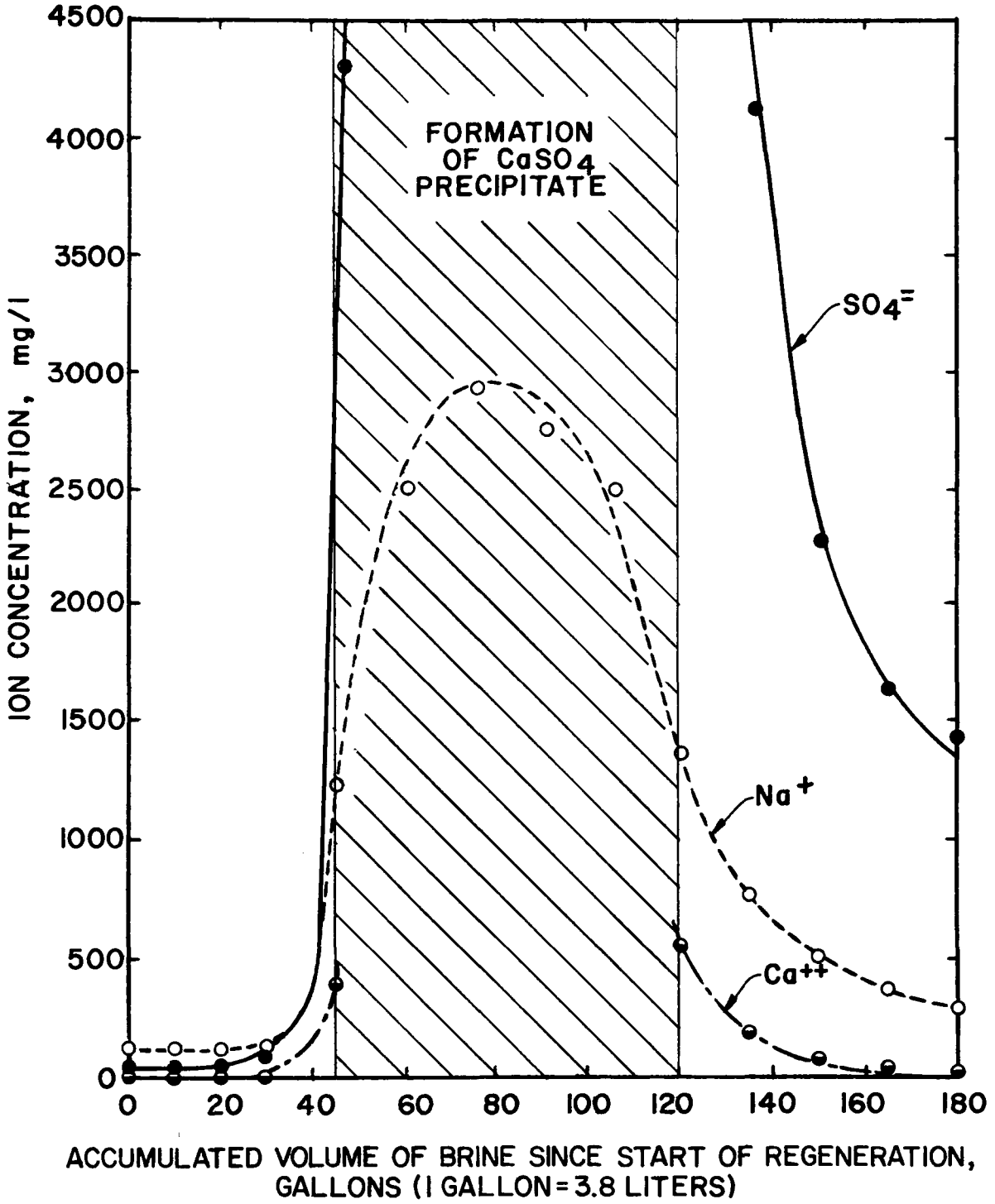

Figure 10. Relationship of concentration vs. volume of the impurity ions in the cation exchanger brine.

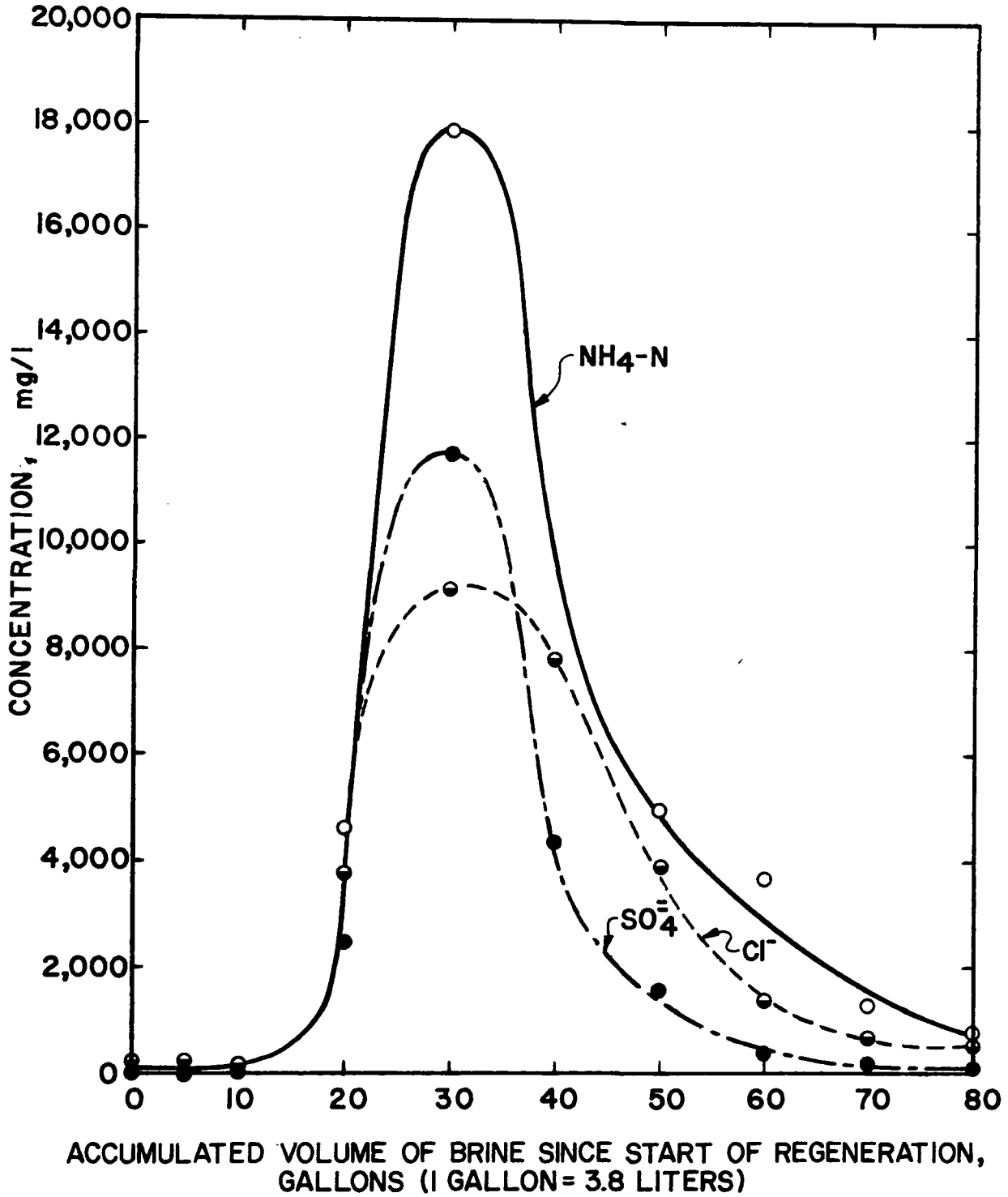

Figure 11. Relationship of concentration vs. volume of the impurity ions in the anion exchanger brine.

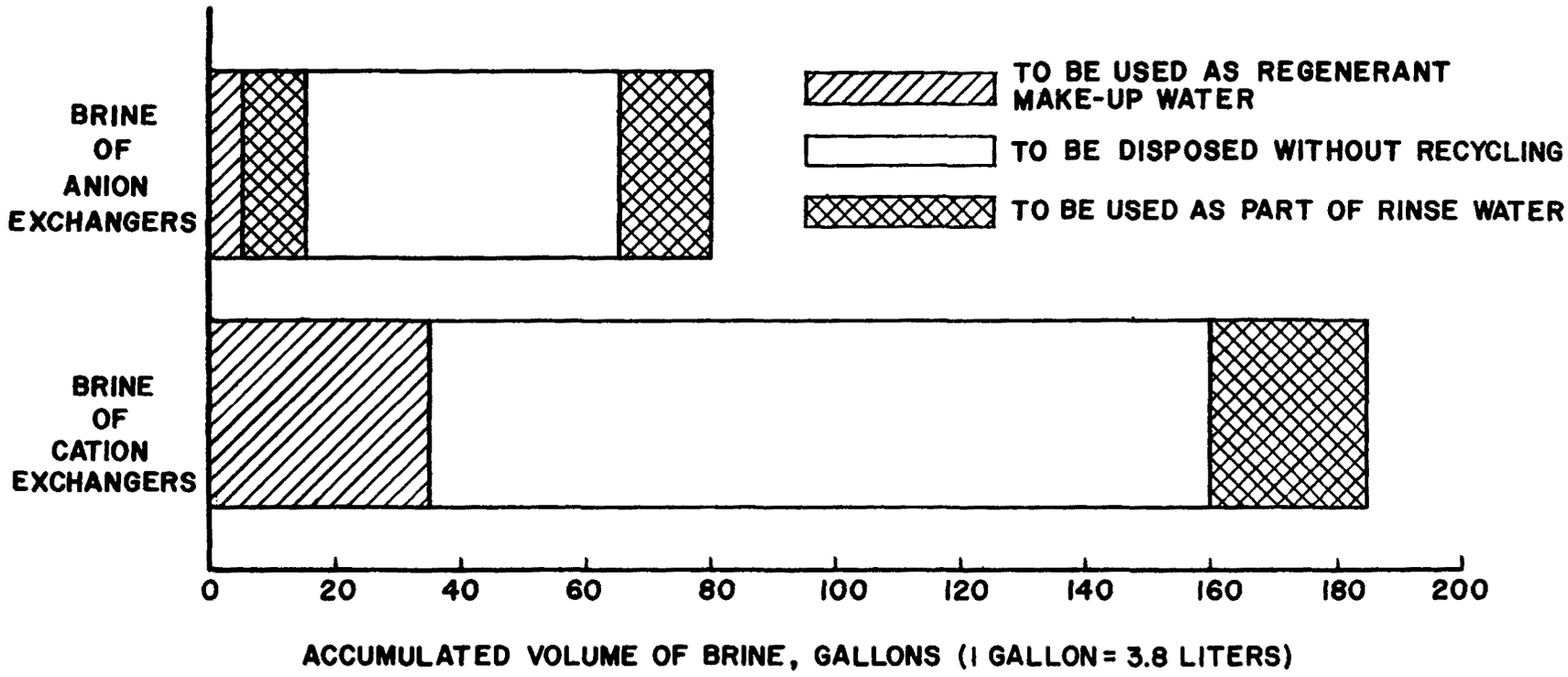

Figure 12. Zoning diagram of brine recycling.

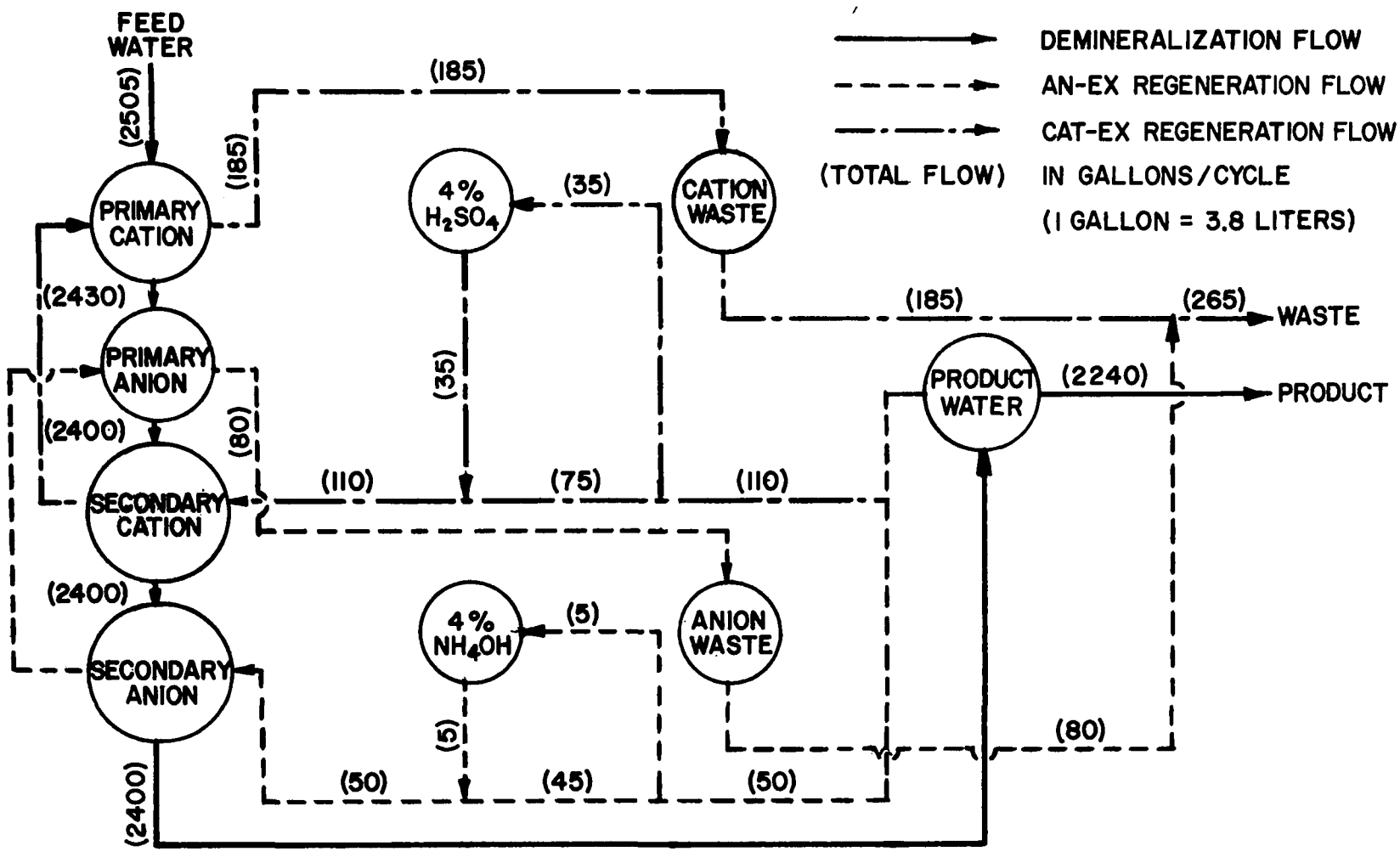

Figure 13. Schematic flow diagram for ion exchange process without brine recycling.

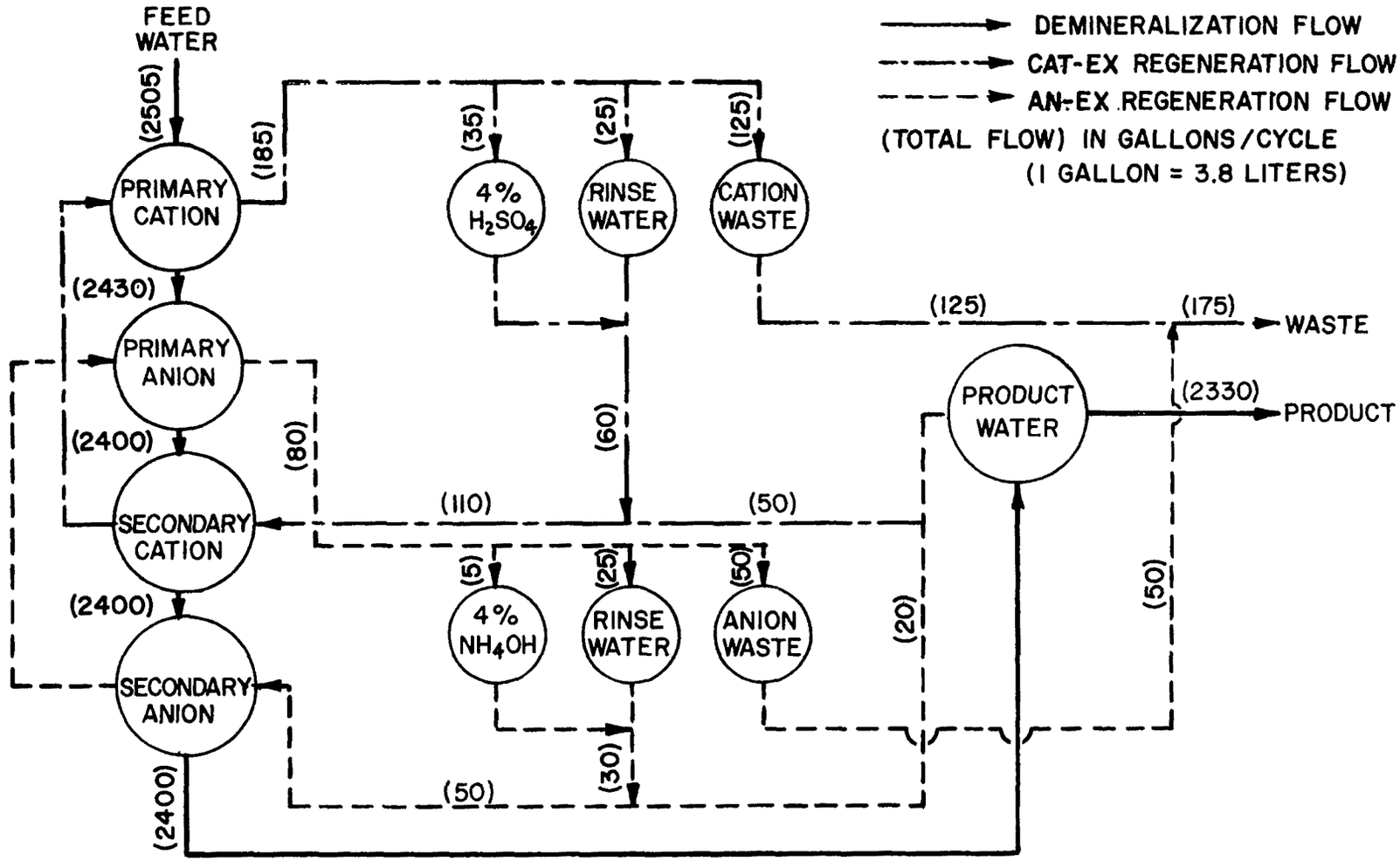

Figure 14. Schematic flow diagram for ion exchange process with brine recycling.

TABLE 15. AVERAGE EFFLUENT QUALITIES OF THE TWO-STAGE ION EXCHANGE SYSTEM OPERATING WITH BRINE RECYCLING

Parameter (mg/l)		Carbon Effluent	Primary Cation Effluent	Primary Anion Effluent	Secondary Cation Effluent	Secondary Anion Effluent	Total Removal %
Calcium		59	0.41	0.43	0.16	0.15	100
Magnesium		12	0.19	0.19	0.07	0.07	99
Sodium		110	49	49	8.1	8.3	93
Potassium		13	6.5	6.9	1.6	1.5	89
Ammonium	(as N)	16	7.8	8.0	1.5	1.5	91
Sulfate		63	67	3.6	3.3	0.37	99
Chloride		116	114	51	50	7.3	94
Nitrate	(as N)	2.0	1.1	0.58	0.60	0.28	86
Phosphate	(as PO_4)	29	29	14	13	0.39	99
Alkalinity	(as $CaCO_3$)	251		59		24	
Acidity	(as $CaCO_3$)		120		55		
TDS		571				74	87
pH		7.7	2.9	6.2	3.1	5.9	
Conductivity	(μmhos/cm)	1,000	1,200	320	490	64	94
COD		6.2				2.4	61

TABLE 16. EFFECTS OF BRINE RECYCLING UPON THE TWO-STAGE ION EXCHANGE PILOT PLANT PERFORMANCE

Parameter	Regeneration with Brine Recycling	Regeneration without Brine Recycling
TDS Removal, %	87	89
Water Recovery, %	93	89
Regeneration Efficiencies, %		
Cation Exchanger	87	85
Anion Exchanger	88	90
Total Ion Leakages, %		
Cation Exchanger	5.2	5.8
Anion Exchanger	4.8	6.5

recycling a very attractive and very beneficial practice. However, the actual savings in the overall process cost (excluding brine disposal) might not be too significant because of some additional expenses required by the additional storage capacity for holding the brine, and the higher degree of automation for recycling operation.

Table 17 shows the average characteristics of the different portions of the brine in various reuses. The determinations of the TDS values for samples E and F, which had very high concentrations of ammonium and chloride ions, were found to be quite inaccurate using the routine analytical procedures. Therefore, the calculated values instead of measured values are shown in Table 17.

RESIN LIFE

Since the resin life is a major cost-related parameter in the ion exchange process, a great deal of research effort was expended in the area of resin life and resin stability.

During the entire period of experimentation with the Infilco two-stage ion exchange pilot plant, resin samples were withdrawn at various intervals for inspection and analysis. The resin analysis was conducted by the Infilco analytical laboratory at Tucson, Arizona. The last set of resin samples analyzed by Infilco were taken after a total of 450 operation runs, approximately 30 months of operation. The total volume of water treated by the resins at the time of last sampling was about 4.73 million liters (1.25 million gallons). Table 18 shows the results of the dry screen analysis of the cation and anion exchange resins. Table 19 shows the resin capacity of the cation and anion exchange resin in terms of percent of the capacity of virgin resins operating under identical experimental conditions. The rinse water requirements for the anion exchange resins in various operation stages were summarized in Table 20.

As indicated in Table 19 and Table 20, the primary anion exchange resin, Duolite A-30B, showed substantial deterioration in both resin capacity and rinse efficiency. The secondary anion exchange resin, Duolite A-30B, also showed a certain degree of degradation. These results as determined by standard laboratory procedures seemed to be very discouraging. However, the laboratory procedures employed regeneration levels many times higher than that employed in the actual pilot plant operation. In the pilot plant, the anion exchange resins were regenerated with ammonium hydroxide solution at the very low level of 9.6 g/l (0.6 lb/cu ft) of NH_3, while in the laboratory resin analysis, the anion exchange resins were regenerated with caustic soda at an excessively high regeneration level.

TABLE 17. QUALITY CHARACTERISTICS OF THE VARIOUS PORTIONS OF THE BRINES

Parameter mg/l		(A)* 4% H_2SO_4 Make-up Water	(B)* Cation Exchanger Rinse Water	(C)* Cation Exchanger Waste Water	(D)* 4% NH_4OH Make-up Water	(E)* Anion Exchanger Rinse Water	(F)* Anion Exchanger Waste Water
Calcium		6.7	59	1,210	0.38	0.55	0.19
Magnesium		2.4	12	286	0.24	0.77	0.08
Sodium		127	375	2,070	57	117	93
Potassium		13	46	224	5.6	13	7.4
Ammonium	(as N)	17	47	289	16	395	4,498
Sulfate		247	1,960	10,800	9.4	254	4,370
Chloride		87	50	81	98	627	5,350
Nitrate	(as N)	0.80	0.35	1.0	0.68	8.3	63
Phosphate	(as PO_4)	29	13	55	49	128	1,480
Alkalinity	(as $CaCO_3$)					356	1,800
Acidity	(as $CaCO_3$)	38	899	2,510	2		
TDS		525	2,920	16,000	222	1,380**	12,600**
pH		3.2	2.1	1.9	4.3	7.7	7.4
Conductivity	(μmhos/cm)	1,100	7,110	26,900	514	3,720	28,200
COD		17	4.5	16	12	21	162

* Taken from the same streams as indicated in Figure 14. ** Calculated values.

TABLE 18. DRY SCREEN ANALYSIS OF THE CATION AND ANION EXCHANGE RESINS (% RETAINED CUMULATIVE)

Analysis	Cation Exchange Resin, C - 20			Anion Exchange Resin, A - 30 B		
	Virgin Resin	Primary Cation Column Resin*	Secondary Cation Column Resin*	Virgin Resin	Primary Anion Column Resin*	Secondary Cation Column Resin*
U. S. Screen No.						
16	1 - 6	0.9	1.4	---	---	---
20	21 - 43	22.5	13.3	0.6	7.4	7.0
30	67 - 84	48.3	49.4	16.9	33.8	31.3
40	82 - 98	89.6	90.0	54.4	72.2	68.7
50	97 - 99	98.8	98.5	87.5	93.2	90.7
70	100	100	100	100	100	100
Pan	-	Trace	Trace	-	Trace	Trace
Bead Rating (%)						
Perfect	99 - 100	99 - 100	99 - 100	99 - 100	99 - 100	99 - 100
Crazed	---	---	---	---	---	---
Broken	---	Trace	Trace	---	Trace	Trace
Pitted	---	---	---	---	---	---

* Resin samples were taken after 450 demineralization cycles.

TABLE 19. RESIN CAPACITIES OF THE CATION AND ANION EXCHANGE RESINS

Resin Sample	Resin Capacity
Primary Cation Column Resin	100%
Secondary Cation Column Resin	100%
Primary Anion Column Resin	62.3%
Secondary Anion Column Resin	75.6%

NOTES:

1. Resin capacity is expressed as the % of the capacity of the virgin resin operating under identical conditions in laboratory test.
2. Capacity based on water produced with a conductivity equal to or better than 100 μmhos/cm.
3. Resin samples were taken after 450 demineralization cycles.

TABLE 20. RINSE WATER REQUIREMENTS OF ANION RESINS

Resin Sample	100 μmhos/cm Effluent (gal/cu ft)	10 μmhos/cm Effluent (gal/cu ft)
Virgin Resin	6	50
Primary Anion Column Resin	45	213
Secondary Anion Column Resin	15	50

NOTES:

1. Duolite A-30B intermediate base anion exchange resin was used in this study.
2. The resin samples were taken after 450 demineralization cycles.
3. 1 gal/cu ft = 135 l/cu m.

Therefore, the laboratory tests could not be directly translated to actual operations. As far as the pilot plant operation was concerned, there was no discernible decrease in performance efficiency throughout the entire pilot plant operation period.

The best indication of the resin life probably lies in the pilot plant performance itself. Consequently, a 15 lpm (4 gpm) automated single-stage ion exchange pilot plant was designed and operated to handle the special study on resin life. Only a single-stage instead of a complete two-stage system, as in the Infilco two-stage pilot plant, was employed in this pilot plant to reduce the cost for the complex automation. Figure 15 shows the general layout of the automated single-stage system. This system contained two identical reinforced fiberglass resin columns. Each column had a 30.5 cm (12 in) diameter and was 122 cm (48 in) in height. The cation exchange column, which contained 56.6 liters (2 cu ft) of Duolite C-20 resin, preceded the anion exchange column which had 56.6 liters (2 cu ft) of Duolite A-30B resin. The system was designed to provide four regenerations of the cation exchange column to one regeneration of the anion exchange column over a repeating time cycle of 720 minutes. Each 180 minutes of the 720 minute time cycle the cation exchange column would regenerate and each 720 minutes of the 720 minute time cycle, the anion exchange column would regenerate. This repeating time cycle was controlled by a programmed cam timer, which automatically made one complete revolution every 720 minutes.

The regeneration levels for the cation and anion exchange resins were maintained at the same values of 17.6 g/l (1.1 lb/cu ft) of H_2SO_4 and 9.6 g/l (0.6 lb/cu ft) of NH_3, respectively. The system operated under these selected conditions produced an average TDS reduction of 70 percent over the entire operation period of 32 months. The actual monthly fluctuation of the TDS removal is shown in Figure 16. Some operation statistics are shown in Table 21 to compare this automated single-stage system with the Infilco two-stage system. A typical analysis of the feed (carbon-treated secondary effluent) and product water qualities is shown in Table 22. As indicated in Table 21, the automated single-stage ion exchange pilot plant was operated under much more intensive regeneration conditions, and had treated much more wastewater than the Infilco two-stage ion exchange pilot plant. However, the system performance, as reflected by the fairly consistent TDS removal throughout the entire operation period, did not show any significant deterioration. Although the question of long-term effects of wastewater upon the resins has not been completely answered, an optimistic outlook appears justified. Liberal allowances are included in the cost estimates for resin replacement, 10 percent per year for the cation exchange resin and 20 percent per year for anion

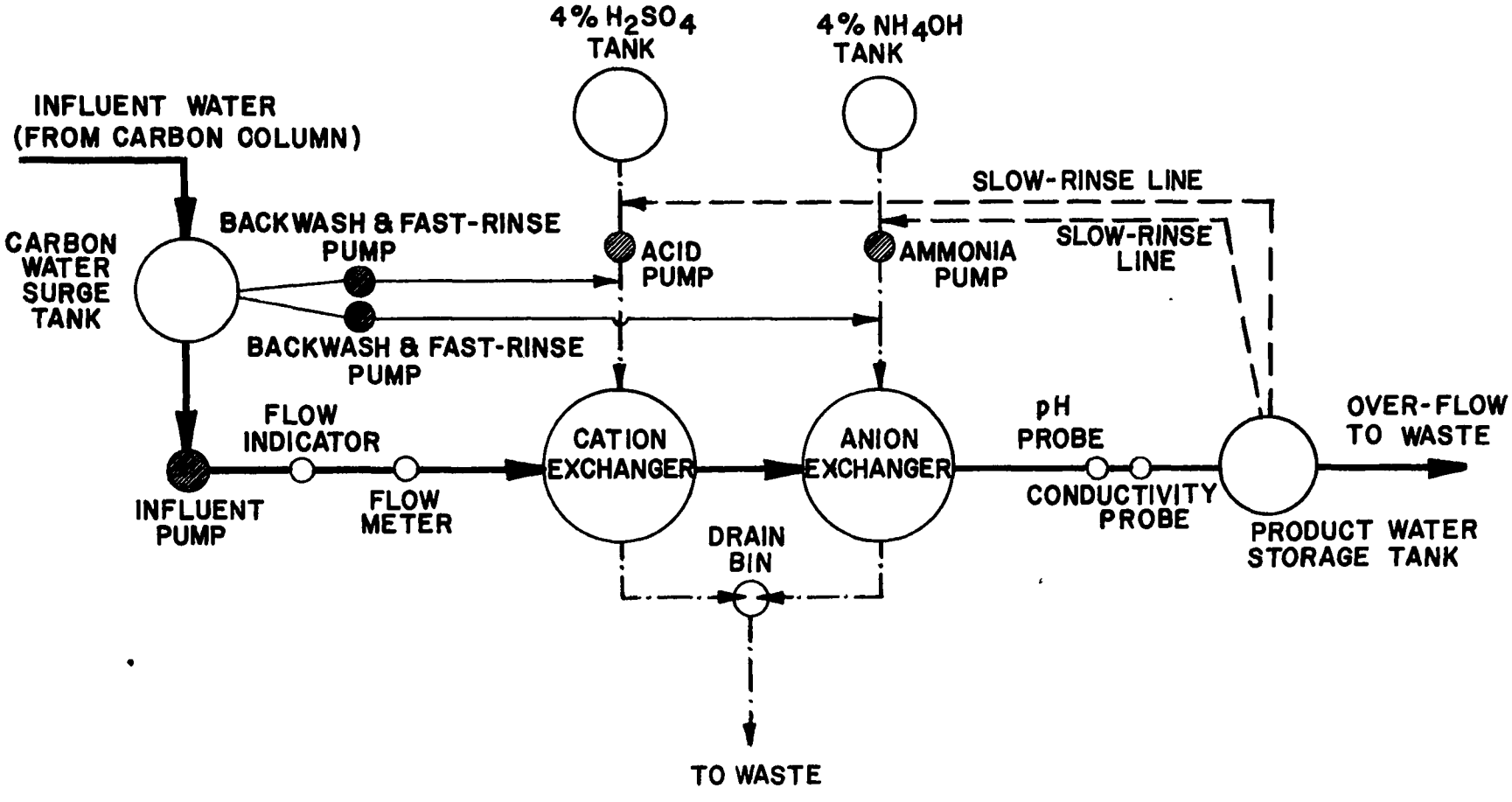

Figure 15. General layout of the automated single-stage ion exchange pilot plant.

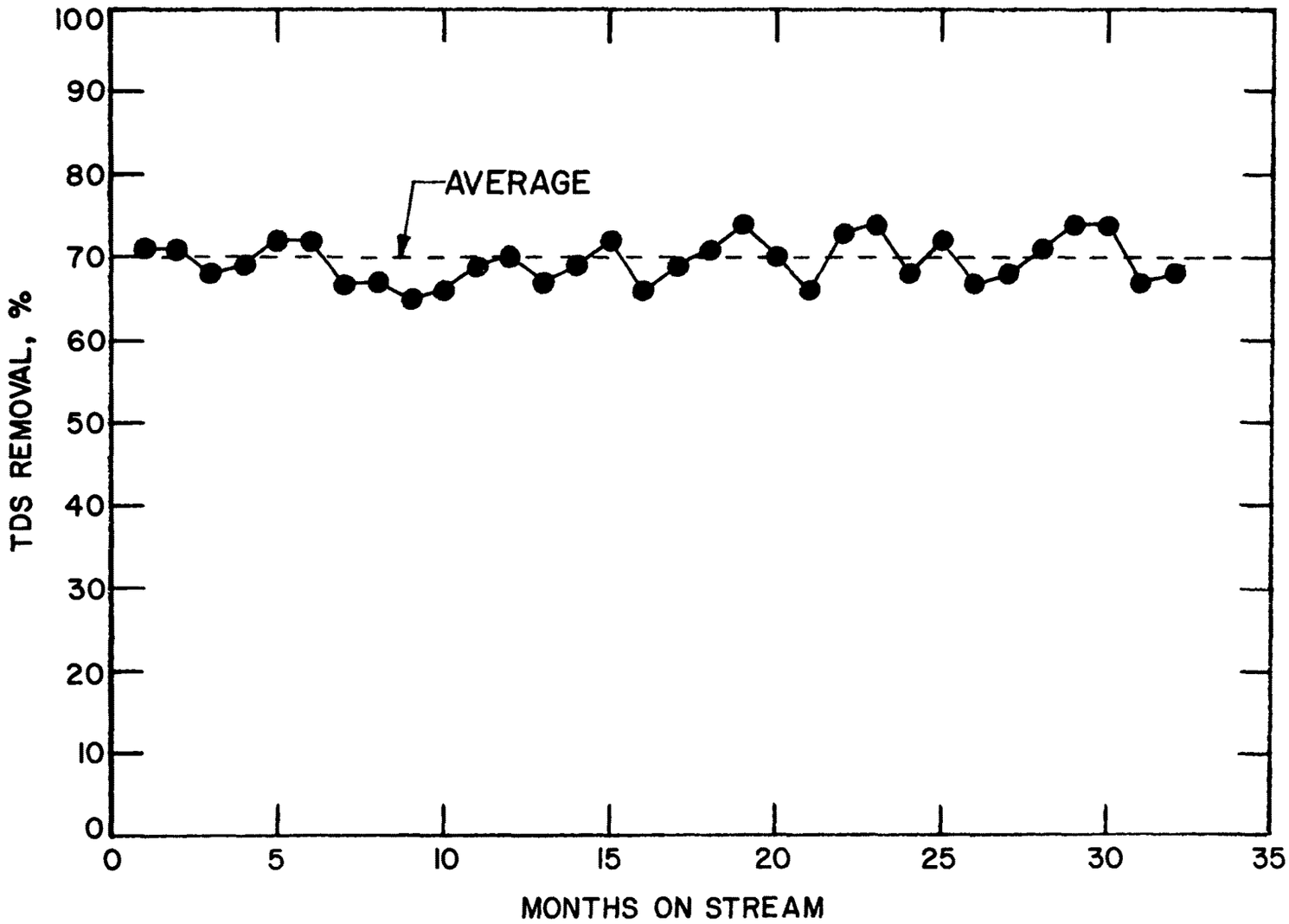

Figure 16. System performance of the single-stage ion exchange unit.

TABLE 21. OPERATION STATISTICS OF SINGLE-STAGE VS. TWO-STAGE ION EXCHANGE SYSTEM

Parameter	Automated Single-Stage System	Infilco Two-Stage System
Total Operation Period, months	32	48
Total Volume of Water Treated		
Cation Exchange System		
million gallons/cu ft	2.3	0.2
million liters/cu m	311	27
Anion Exchange System		
million gallons/cu ft	2.3	0.6
million liters/cu m	311	81
Total Regeneration Performed, cycles		
Cation Exchange System	7,616	744
Anion Exchange System	1,904	744

TABLE 22. TYPICAL PERFORMANCE OF THE AUTOMATED SINGLE-STAGE ION EXCHANGE SYSTEM

Parameter		Feed Water (mg/l)	Product Water (mg/l)	Total Removal %
Calcium		48	0.50	99
Magnesium		8.2	0.10	99
Sodium		76	27	64
Potassium		11	4.6	58
Ammonium	(as N)	12	6.9	43
Sulfate		63	16	75
Chloride		70	27	61
Nitrate	(as N)	0.93	0.40	57
Phosphate	(as PO_4)	27	5.9	78
pH		7.5	6.5	
Conductivity	(μmhos/cm)	910	236	74
TDS		439	127	71
Alkalinity	(as $CaCO_3$)	233	61	

exchange resin, but resin replacement at these rates will still amount to less than 10 percent of the total cost of the ion exchange process.

STEADY-STATE PILOT PLANT OPERATION

A series of 80 complete operating cycles was conducted on a routine operating basis on the Infilco two-stage ion exchange unit to demonstrate a steady-state operation. The unit was operated on what were considered optimum regeneration conditions as determined from the various aforementioned special investigations. The various operating flow rates were restricted by the physical conditions of the pilot plant, and were regulated to the typical pilot plant operating flow rates as shown in Table 3. The TDS values of the feed and product waters for each operating cycle are shown in Figure 17. The overall average TDS values for feed and product waters are 610 mg/l and 72 mg/l, respectively, for a reduction of about 89 percent.

The average water quality of each of the various effluents from the ion exchange pilot plant is shown in Table 23. As indicated in Table 23, the primary cation exchange column removed almost completely the calcium and magnesium ions. However, only about half of the concentrations of the sodium, potassium, and ammonium ions were removed in this column. The remaining half of these less selective monovalent cations were effectively removed by the secondary cation exchange column, which had a much higher state of regeneration as a result of the semi-countercurrent regeneration flow pattern as indicated in Figure 3. Similarly, the primary anion exchange column removed most of the sulfate ions while the nitrate, chloride, and phosphate ions were partially removed by both the primary and secondary columns.

The product water pH of 5.8 was lower than desirable but it was anticipated that the product of the ion exchange process would be blended with non-demineralized wastewater prior to reuse. The buffer capacity of the ion exchange product water was quite low when compared to the water with which it would be blended, and some laboratory tests confirmed that the pH of the ion exchange product water would increase to the pH of the water with which it was blended. Otherwise, an aerating tower can be employed to strip out the carbon dioxide from the ion exchange product to raise the pH to a nearly neutral value.

During the steady-state pilot plant operation period, the entire system functioned satisfactorily with no operational problems. This has demonstrated ion exchange as a reliable and practical process for wastewater demineralization.

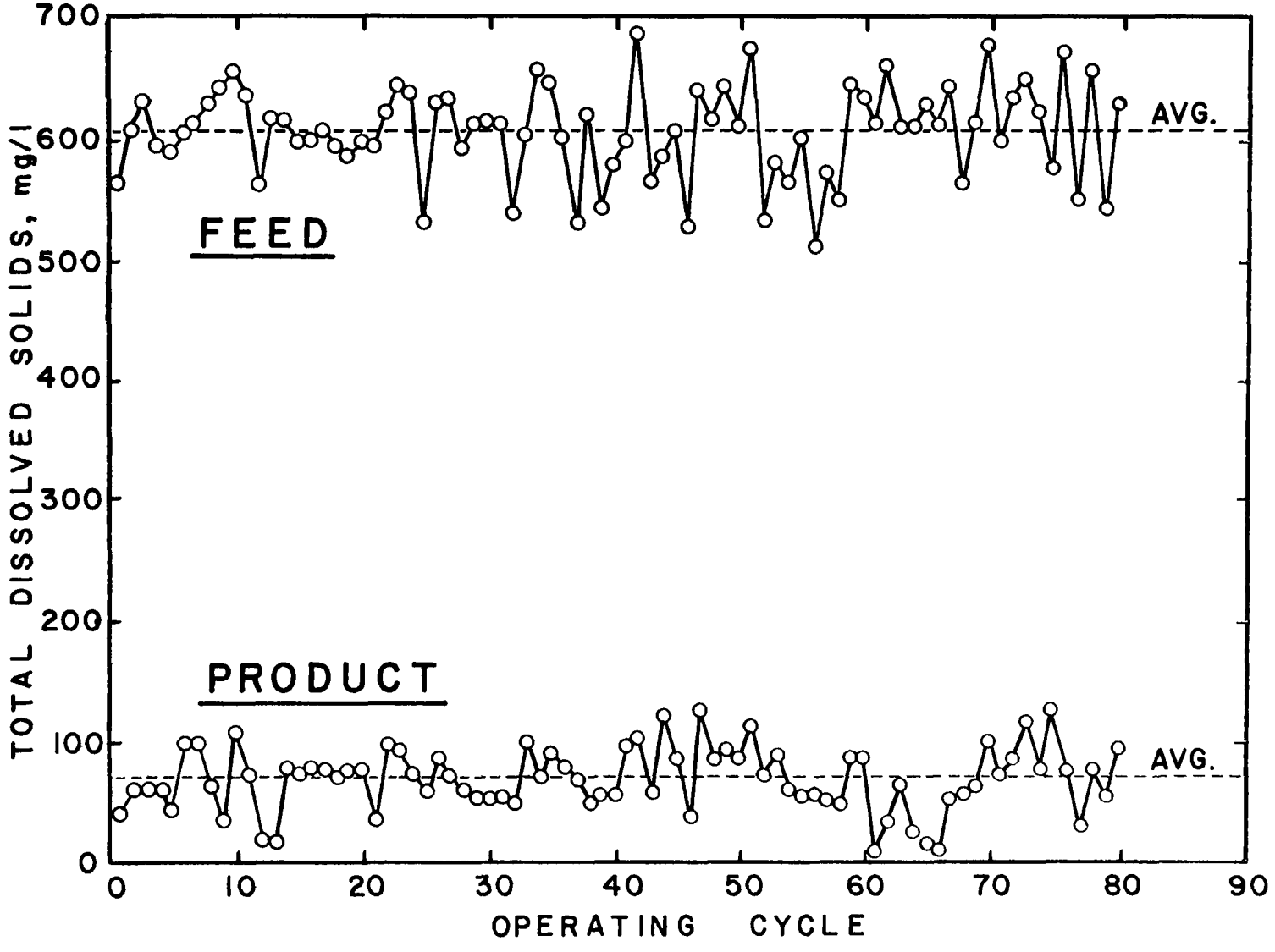

Figure 17. Performance of the two-stage ion exchange system under optimum operating conditions.

TABLE 23. AVERAGE WATER QUALITY CHARACTERISTICS OF THE TWO-STAGE ION EXCHANGE PILOT PLANT UNDER OPTIMUM OPERATING CONDITIONS

Parameter (mg/l)		Carbon Column Effluent (Feed)	Primary Cation Column Effluent	Primary Anion Column Effluent	Secondary Cation Column Effluent	Secondary Anion Column Effluent (Product)
Calcium		53	2.0	1.7	1.1	0.60
Magnesium		17	0.59	0.56	0.38	0.0
Sodium		126	61	59	16	15
Potassium		14	7.3	7.1	1.9	1.9
Ammonium	(as N)	20	9.6	9.2	4.0	3.8
Sulfate		72	72	3.6	3.6	1.3
Nitrate	(as N)	2.9	2.8	1.6	1.5	0.35
Chloride		135	132	84	83	14
Phosphate	(as PO_4)	27	27	15	14	0.25
Alkalinity	(as $CaCO_3$)	218		51		39
Acidity	(as $CaCO_3$)		110		110	
pH		7.4	2.7	5.7	2.8	5.8
Total COD		10	9.7	6.8	5.5	3.7
Silica	(as SiO_2)	23				23
Conductivity	(μmhos/cm)	1,040	1,390	390	1,040	100
TDS		610	298	198	104	72

SECTION 6

COST ESTIMATE

Cost estimates have been prepared for the ion exchange process based upon the Infilco two-stage ion exchange pilot plant study conducted at Pomona Research Facility. Figure 18 shows the effect of plant size on the process cost for a 90 percent TDS removal from 600 mg/l feed to 60 mg/l product. This cost curve clearly demonstrates that the process cost approaches its minimum level when the plant size is equal to or larger than 37,850 cu m/day (10 MGD). Therefore, a 37,850 cu m/day (10 MGD) plant is used as a standard size for various cost estimates presented in this report. A detailed analysis on the process cost estimate for a 37,850 cu m/day (10 MGD) product water ion exchange plant is shown in Table 24. The various assumptions employed in making this cost analysis are also included in the table. This cost estimate corresponds to the costs as of August, 1973.

As indicated in Table 24, the total process cost of 5.8¢/1,000 liters (22.4¢/1,000 gallons) is comprised of 0.9¢/1,000 liters (3.7¢/1,000 gallons) for capital amortization and 4.9¢/1,000 liters (18.7¢/1,000 gallons) for operation and maintenance. The dominant cost item is the regeneration expenses, with 3.5¢/1,000 liters (13.6¢/1,000 gallons) attributed to this item. The 5.8¢/1,000 liters (22.4¢/1,000 gallons) cost estimate covers only the cost of the ion exchange process itself but not the cost of pretreatment (it will cost an additional 2.3¢/1,000 liters or 9¢/1,000 gallons for carbon adsorption) and brine disposal.

Since most demineralization applications will involve feed water of higher TDS than that encountered at Pomona, some cost estimates have been made to cover an influent TDS range as high as 1,500 mg/l, which is considered to be the practical cost-effective limit for ion exchange applications to wastewater demineralization. To make such estimates it is necessary to assume the influent concentrations of the various ionic constituents in the higher TDS waters. The cost estimate could be different if the individual chemical constituents would vary from the assumed concentrations. However, the use of TDS as a gross parameter is sufficient to obtain reasonably close estimates. Figure 19 shows the effect of the influent TDS on the

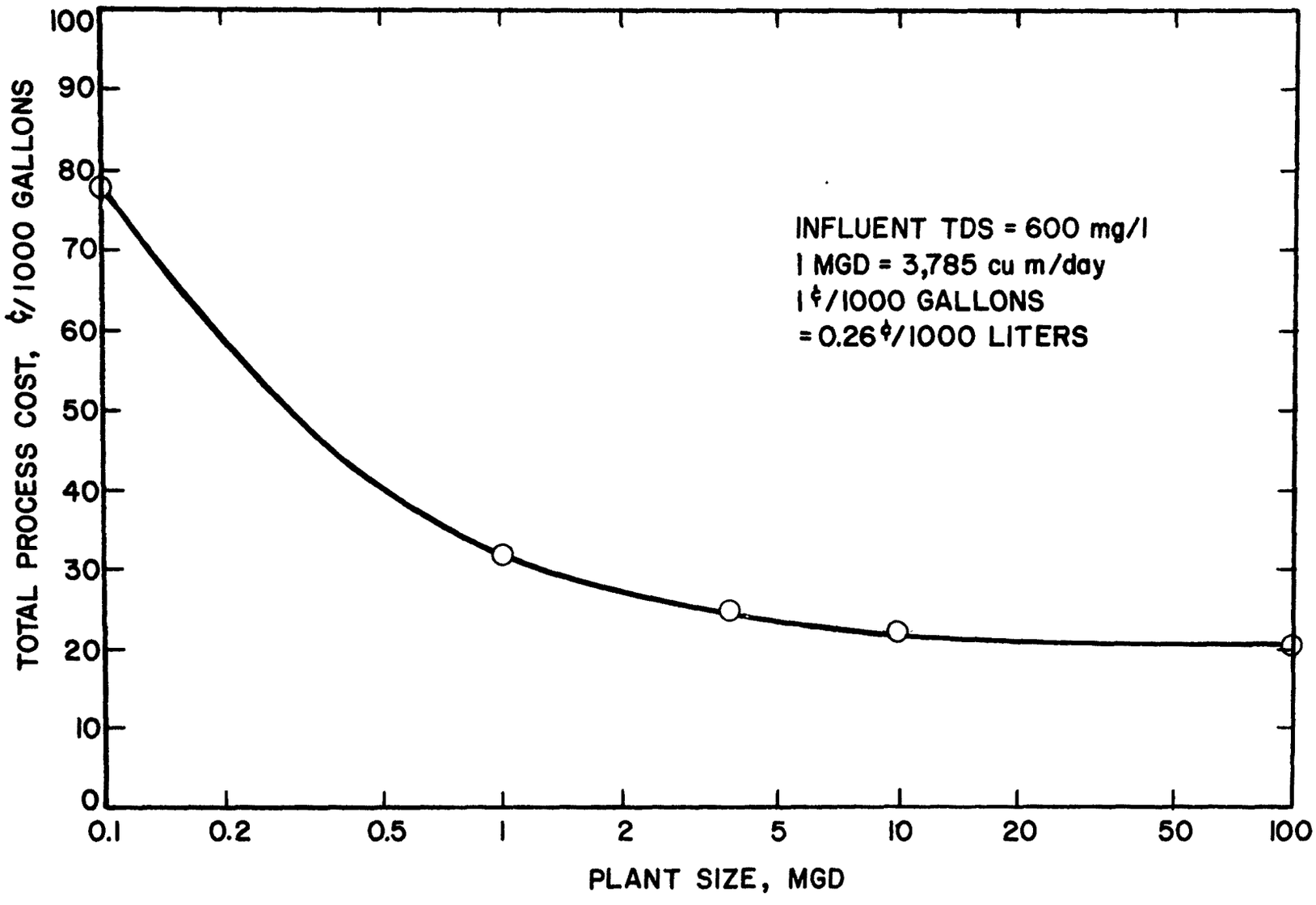

Figure 18. Effect of plant size on ion exchange process cost – with 90% TDS reduction.

TABLE 24. COST ESTIMATE OF TWO-STATE ION EXCHANGE PROCESS
37,850 cu m/day (10 MGD) PRODUCT WATER PLANT

Amortization of Capital		¢/1,000 Gallons
$1,660,000; 20 years @ 5%		3.7
Operation and Maintenance		
Regeneration		
Cation Exchanger (Sulfuric Acid)	10.0	
Anion Exchanger (Ammonium Hydroxide)	3.6	
Resin Replacement	2.0	
Maintenance Materials	1.0	
Power	0.8	
Labor	1.3	
		18.7
Total Process Cost		22.4

Assumptions:

1. Influent TDS = 600 mg/l; effluent TDS = 60 mg/l
2. Water recovery = 89%
3. Regeneration efficiency : cation = 85%; anion = 90%
4. Annual resin replacement : cation = 10%; anion = 20%
5. 1¢/1,000 gallons = 0.26¢/1,000 liters
6. Based on August, 1973 material and construction costs
7. Costs for brine disposal and pretreatment are not included

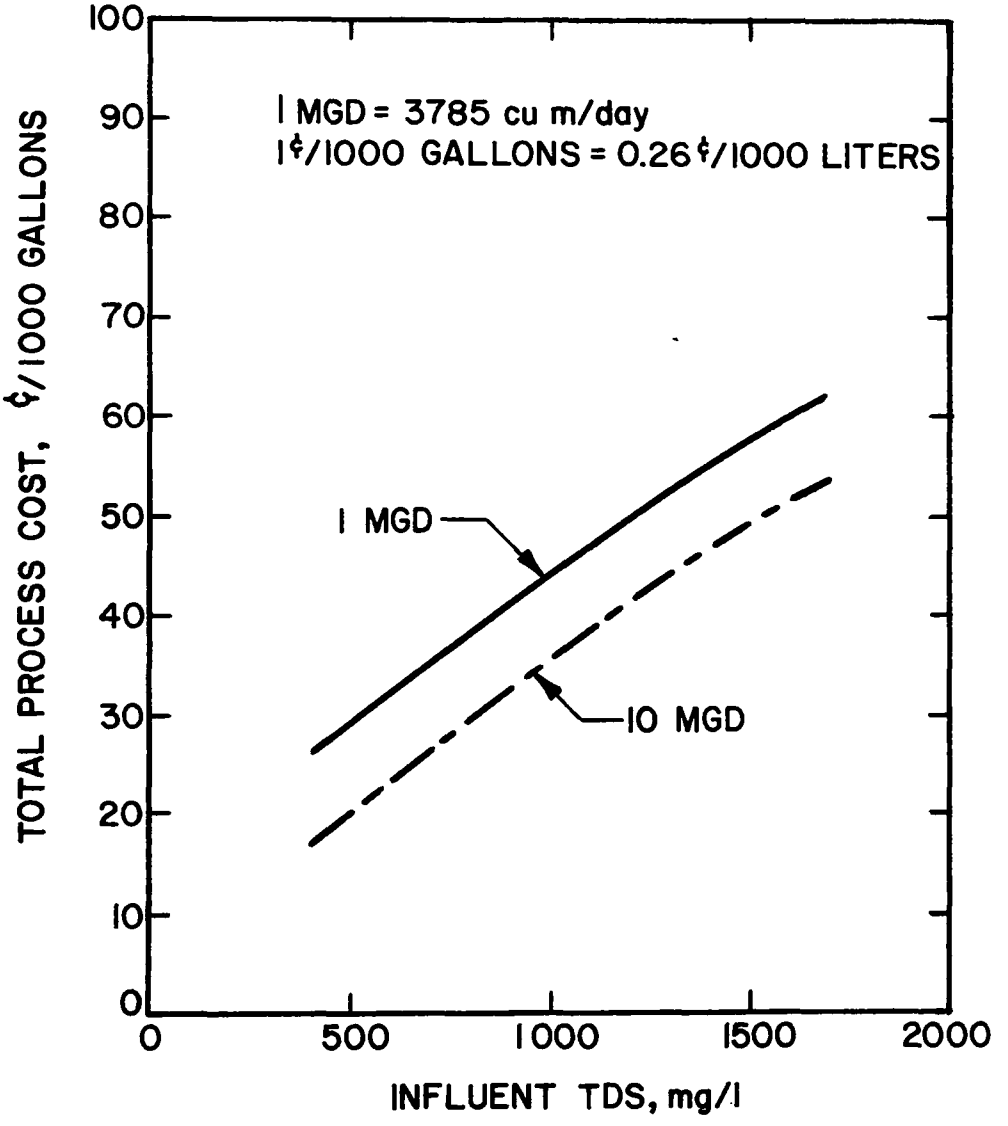

Figure 19. Effect of influent TDS upon ion exchange process cost — with 90% TDS reduction.

total process cost for plant sizes of 3,785 cu m/day (1 MGD) and 37,850 cu m/day (10 MGD), with 90 percent TDS reduction.

Additional cost estimates have been made to compare the two-stage ion exchange process with the single-stage ion exchange process, which was operated at the Pomona Research Facility solely for resin life study purposes. The single-stage system was operated under the same optimum regeneration conditions as the two-stage system to simulate the full scale operation of the primary stage of the two-stage system. Consequently, the single-stage system achieved only about 70 percent TDS removal which was close to the performance of the primary stage of the two-stage system, whereas the complete two-stage system achieved about 90 percent TDS removal. Table 25 shows the total process costs for both single-stage and two-stage systems to produce product waters with approximately 70 percent and 90 percent TDS reductions, respectively. As indicated in this table, the total process cost of 4.6¢/1,000 liters (17.8¢/1,000 gallons) for the single-stage system is about 20 percent lower than the 5.8¢/1,000 liters (22.4¢/1,000 gallons) for the two-stage system. However, if the product waters from these systems are to be blended with non-demineralized water to achieve one-third TDS reduction from 600 mg/l in the influent waters to 400 mg/l in the blended waters, then the unit process cost for the two-stage systems will be slightly less than the single-stage system as shown in Table 26.

Table 27 illustrates another case of cost estimate comparison between the single-stage system and the two-stage system. In this case, the TDS of the influent is 1,000 mg/l and the TDS of the blended water set at 500 mg/l. Contrary to previous case as shown in Table 26, the single-stage system instead of the two-stage system is the cheaper process to accomplish this particular objective.

Although there are slight differences in the cost estimates as indicated in Table 26 and Table 27 for a different system design, it seems the differences are so little that both single-stage and two-stage systems can be considered equally feasible for wastewater demineralization whenever a blending operation can be used in the system to obtain a blended product water to meet a less restrictive TDS removal requirement. However, the two-stage ion exchange process is more economical than the single-stage process in producing an unblended product water with a low effluent TDS.

TABLE 25. COST ESTIMATE COMPARISON OF TWO-STAGE VS. SINGLE-STAGE ION EXCHANGE SYSTEM - 37,850 cu m/day (10 MGD) PLANT

	Single - Stage ¢/1,000 Gallons	Two-Stage ¢/1,000 Gallons
Amortization of Capital		
20 years @ 5%	3.3	3.7
Operation and Maintenance		
Regeneration		
Cation Exchanger (H_2SO_4)	7.7	10.0
Anion Exchanger (NH_4OH)	2.3	3.6
Resin Replacement	1.9	2.0
Maintenance Materials	0.9	1.0
Power	0.7	0.8
Labor	1.0	1.3
Total Process Cost	17.8	22.3

Assumptions:

1. TDS of feed water = 600 mg/l
2. TDS of product water : single-stage = 200 mg/l; two-stage = 60 mg/l
3. Water recovery = 89%
4. Regeneration efficiency : cation = 85%; anion = 90%
5. Resin life : cation = 10 years; anion = 5 years
6. Costs for pretreatment and brine disposal are not included
7. 1¢/1,000 gallons = 0.26¢/1,000 liters
8. Based on August, 1973 material and construction costs

TABLE 26. COST ESTIMATE COMPARION OF TWO-STAGE VS. SINGLE-STAGE ION EXCHANGE SYSTEM WITH BLENDING OPERATION

	¢/1,000 gallons
A. 37,850 cu m/day (10 MGD) Blended Product Water Flow - with Different Ion Exchange Plant Size	
a. Single-Stage System - 18,930 cu m/day (5 MGD) Plant	9.7
b. Two-Stage System - 14,000 cu m/day (3.7 MGD) Plant	9.4
B. 37,850 cu m/day (10 MGD) Ion Exchange Plant - with Different Blended Product Water Flow	
a. Single-Stage System - 75,700 cu m/day (20 MGD) Blended Product Water Flow	9.1
b. Two-Stage System - 102,000 cu m/day (27 MGD) Blended Product Water Flow	8.5

Assumptions:

1. TDS of feed water = 600 mg/l
2. TDS of blended product water = 400 mg/l
3. Regeneration efficiency : cation = 85%; anion = 90%
4. Resin life : cation = 10 years; anion = 5 years
5. 1¢/1,000 gallons = 0.26¢/1,000 liters
6. Costs for pretreatment and brine disposal are not included
7. Based on August, 1973 material and construction costs

TABLE 27. COST ESTIMATE FOR PRODUCING 500 mg/l TDS BLENDED PRODUCT WATER - 37,850 cu m/day (10 MGD) ION EXCHANGE PLANT SIZE

Parameter	Single-Stage System	Two-Stage System
Total Blended Product Flow		
MGD	13.5	17.5
cu m/day	51,100	66,200
Total Process Cost		
¢/1,000 gallons	19.8	20.3
¢/1,000 liters	5.1	5.3

Assumptions:

1. TDS of feed water = 1,000 mg/l
2. TDS of blended product water = 500 mg/l
3. Regeneration efficiency : cation = 85%; anion = 90%
4. Resin life : cation = 10 years; anion = 5 years
5. Costs for pretreatment and brine disposal are not included
6. Based on August, 1973 material and construction costs

REFERENCES

1. Kunin, Robert, and Donald G. Downing, "New Ion Exchange Systems for Treating Municipal, Domestic, and Industrial Waste Effluents," paper presented at the International Water Conference, Pittsburgh, Pennsylvania, October, 1970.

2. Technical Bulletin (April, 1972), ICI Australia Limited, Melbourne, Australia.

3. Duolite Tech Sheet No. 120, (October, 1968) and Duolite Data Leaflet No. 35 (June, 1969), Resinous Products Division, Diamond Shamrock Chemical Co., Redwood City, CA 94063.

4. Technical Bulletin No. IE-119-67 (August, 1967), Rohm and Haas, Philadelphia, Pennsylvania 19105.

TECHNICAL REPORT DATA
(Please read Instructions on the reverse before completing)

1. REPORT NO. EPA-600/2-77-146	2.	3. RECIPIENT'S ACCESSION NO.
4. TITLE AND SUBTITLE Wastewater Demineralization by Two-Stage Fixed-Bed Ion Exchange Process		5. REPORT DATE September 1977(Issuing Date)
		6. PERFORMING ORGANIZATION CODE
7. AUTHOR(S) Ching-lin Chen, Robert P. Miele		8. PERFORMING ORGANIZATION REPORT NO.
9. PERFORMING ORGANIZATION NAME AND ADDRESS County Sanitation Districts of Los Angeles County, Whittier, California 90607		10. PROGRAM ELEMENT NO. 1BC611
		11. CONTRACT/GRANT NO. 14-12-150
12. SPONSORING AGENCY NAME AND ADDRESS Municipal Environmental Research Laboratory--Cin., OH, Office of Research and Development, U.S. Environmental Protection Agency, Cincinnati, Ohio 45268		13. TYPE OF REPORT AND PERIOD COVERED Final
		14. SPONSORING AGENCY CODE EPA/600/14

15. SUPPLEMENTARY NOTES

Project Officer: Irwin J. Kugelman (513-684-7631)

16. ABSTRACT

A 9.5 l/min (2.5 gpm) two-stage fixed bed ion exchange process (primary cation - primary anion - secondary cation - secondary anion) was operated on a feed of carbon treated secondary effluent for 48 months at Pomona, California. To achieve high levels of regeneration efficiency regenerant was passed counter current to the feed, and regenerant levels were held to 17.6 g H_2SO_4 per liter of cation resin (1.1 lb/ft^3) and 9.6 g NH_3 per liter of anion resin (0.6 lb/ft^3). At this level regenerant efficiency was 85% for the cation resin and 90% for the anion resin. TDS removal for feed range of 600 mg/l to 1700 mg/l was in excess of 90% despite the low level of regenerant used.

A single stage system (primary cation - primary anion) was set us to determine resin lifetime performance. The same feed and regenerant was used as in the two-stage system. During a 32 month period the cation resin was regenerated over 7,000 times and the anion resin was regenerated almost 2,000 times. No evidence of any deterioration was observed. The system consistently achieved 70% TDS removal.

Estimates are presented on treatment costs as a function of plant capacity and feed TDS based on the data generated.

17. KEY WORDS AND DOCUMENT ANALYSIS

a. DESCRIPTORS	b. IDENTIFIERS/OPEN ENDED TERMS	c. COSATI Field/Group
Demineralizing Desalting Ion exchanging Purification Water reclamation	Wastewater Renovation	13B

18. DISTRIBUTION STATEMENT Release to Public	19. SECURITY CLASS (This Report) Unclassified	21. NO. OF PAGES 82
	20. SECURITY CLASS (This page) Unclassified	22. PRICE

EPA Form 2220-1 (9-73)

☆ U.S. GOVERNMENT PRINTING OFFICE: 1977—757-056/6520