WATER POLLUTION CONTROL RESEARCH SERIES • 14010 DYK 03/70

Treatment of Acid Mine Drainage by Reverse Osmosis

U.S. DEPARTMENT OF THE INTERIOR • FEDERAL WATER QUALITY ADMINISTRATION

WATER POLLUTION CONTROL RESEARCH SERIES

The Water Pollution Control Research Reports describe the results and progress in the control and abatement of pollution in our Nation's waters. They provide a central source of information on the research, development, and demonstration activities in the Federal Water Quality Administration, in the U. S. Department of the Interior, through inhouse research and grants and contracts with Federal, State, and local agencies, research institutions, and industrial organizations.

A tripilicate abstract card sheet is included in the report to facilitate information retrieval. Space is provided on the card for the user's accession number and for additional uniterms.

Inquiries pertaining to Water Pollution Control Research Reports should be directed to the Head, Project Reports System, Planning and Resources Office, Office of Research and Development, Department of the Interior, Federal Water Quality Administration, Room 1108, Washington, D. C. 20242.

Treatment of Acid Mine Drainage by Reverse Osmosis

by

Rex Chainbelt, Inc.
Milwaukee, Wisconsin 53201

for the

Commonwealth of Pennsylvania
Department of Mines and Mineral Industries
Harrisburg, Pennsylvania 17102

and the

FEDERAL WATER QUALITY ADMINISTRATION

U.S.DEPARTMENT OF THE INTERIOR

Program Number
FWPCA Grant No. 14010 DYK

March 1970

For sale by the Superintendent of Documents, U.S. Government Printing Office
Washington, D.C., 20402 - Price 55 cents

ABSTRACT

This report documents a study on the treatment of acid mine drainage by reverse osmosis. The objective of the study was to determine the feasibility of utilizing reverse osmosis to abate pollution due to acid mine drainage, and produce a water which could be used by industry or as a municipal water supply.

A test site in Shickshinny, Pennsylvania was selected as a source of acid mine water for the study. A sample of this water was tested in a laboratory reverse osmosis unit to determine the design parameters for a 10,000 gallon per day demonstration unit. This unit was operated for a period of 35 days on acid mine drainage as received from the Mocanaqua discharge near Shickshinny. Operation during this period was continuous, i.e., 24 hours per day. Daily samples of feed water, product water, and waste concentrate were analyzed to determine the effectiveness of the demonstration unit.

The results obtained during the demonstration period indicated that the reverse osmosis process has potential application in acid mine drainage treatment. A high quality water was produced which was suitable for use by industries or municipalities with a minimum of additional treatment. There are, however, operational problems which must be solved prior to utilizing reverse osmosis on a large scale. These include maintenance of high permeation rates through the membrane by reducing membrane fouling and determination of the optimum flow sheet for an acid mine treatment system utilizing reverse osmosis.

To provide the information necessary to effectively utilize reverse osmosis in treating acid mine drainage, it is recommended that:

1) The mechanisms and methods of reducing iron fouling of reverse osmosis membranes be evaluated in the laboratory using synthetic acid mine water.

2) The optimum flow sheet for treating acid mine drainage by reverse osmosis be determined by laboratory evaluation of synthetic acid mine water.

3) The laboratory data be confirmed by a field evaluation period.

This study was performed by the Technical Center of Rex Chainbelt Inc. under a contract with the Commonwealth of Pennsylvania, Department of Mines and Mineral Industries in fulfillment of project No. CR-86 under the partial sponsorship of the Federal Water Pollution Control Administration (Grant Number 14010 DYK).

TABLE OF CONTENTS

	Page
INTRODUCTION	1
SUMMARY AND CONCLUSIONS	1
RECOMMENDATIONS	2
REVERSE OSMOSIS AND ITS APPLICATION TO ACID MINE DRAINAGE TREATMENT	3
DESIGN OF THE DEMONSTRATION UNIT	9
FIELD OPERATION AND EVALUATION	9
DISCUSSION OF RESULTS	17
BIBLIOGRAPHY	25
ACKNOWLEDGMENTS	26
PUBLICATIONS	26
APPENDIX	27

LIST OF FIGURES

Page

Figure 1 DESCRIPTION OF OSMOSIS..... 4

Figure 2 ESSENTIAL ELEMENTS OF A REVERSE OSMOSIS SYSTEM..... 5

Figure 3 SPIRAL WOUND MEMBRANE..... 6

Figure 4 SKETCH OF HOLLOW FINE FIBER RO MODULE..... 8

Figure 5 SKETCH OF THE TUBULAR MODULES USED IN THIS STUDY..... 8

Figure 6 SCHEMATIC FLOW SHEET FOR DEMONSTRATION UNIT..... 11

Figure 7 SUMMARY OF FLOW DATA..... 13

Figure 8 VARIATION OF PERMEATE WATER QUALITY..... 15

Figure 9 TITRATION - PERMEATE FROM REVERSE OSMOSIS TEST UNIT.. 19

Figure 10 TITRATION CURVE - ACID MINE DRAINAGE SHICKSHINNY, PENNSYLVANIA..... 20

Figure 11 COMPARISON OF THE RATE OF FLUX DECLINE IN THE FIELD AND LABORATORY..... 24

LIST OF TABLES

Table 1 SUMMARY LABORATORY RESULTS..... 10

Table 2 WATER QUALITY DATA..... 16

Table 3 IRON REJECTION WITH VARIOUS POROSITY MEMBRANES WITH SYNTHETIC ACID MINE WATER..... 18

Table 4 PERMEATE QUALITY FROM INDIVIDUAL MODULES..... 21

Table 5 PRODUCT WATER ION BALANCE..... 28

Table 6 FEED WATER ION BALANCE..... 29

Table 7 CONCENTRATE ION BALANCE..... 30

Table 8 IRON (II) MASS BALANCE..... 31

Table 9 MAGNESIUM MASS BALANCE..... 32

Table 10 CALCIUM MASS BALANCE..... 33

Table 11 SULFATE MASS BALANCE..... 34

Table 12 MANGANESE MASS BALANCE..... 35

INTRODUCTION

Drainage from mining operations in the United States has resulted in a serious water pollution problem (1). To abate this pollution, many methods have been proposed which utilize source control. These include mine sealing, water diversion, mine flooding, improved mining techniques, and land reclamation. While these techniques are effective, they do not completely solve the mine drainage problem. Since 40% of the mine drainage comes from active mines which are usually not amenable to source control, treatment of some mine discharges will be necessary (1)(2), and several states have enacted laws requiring treatment of the drainage from active mines.

The primary pollutants present in mine drainage include sulfate, iron, manganese, calcium, magnesium and acidity (2). Removal of the pollutants from acid mine drainage can be accomplished with a variety of processes. Iron and manganese can be removed by neutralization, aeration and settling, since they easily form insoluble hydrates. These processes, however, do not remove the other dissolved salts present in acid mine drainage such as SO_4, Ca, Mg, etc., and therefore do not produce a high quality, low dissolved solids water. Almost complete removal of the dissolved solids in mine drainage could be accomplished by ion exchange, distillation, and reverse osmosis. The objective of this study is to determine the feasibility of using reverse osmosis to treat acid mine drainage and produce a high quality water which can be used by municipalities or industry.

To accomplish this objective the project was divided into two phases. In Phase 1, a sample of acid mine water from the Mocanaqua discharge near Shickshinny, Pennsylvania, was evaluated in a laboratory reverse osmosis unit. The results of this evaluation allowed selection of the proper membrane for design and construction of a 10,000 gpd reverse osmosis demonstration unit. Phase 2 consisted of operating this unit on the Mocanaqua discharge. Parameters evaluated during this field operation included water quality, water permeation rates, membrane cleaning techniques, and water conversion rates.

SUMMARY AND CONCLUSIONS

This study has demonstrated the potential use of reverse osmosis in treating acid mine drainage. A high quality water was produced which is suitable for reuse with a minimum of additional treatment. Some operational problems, however, must be investigated before reverse osmosis can be applied to treat acid mine drainage on a large scale. The main problem is maintenance of high water permeation rates through the membrane by proper operating techniques to reduce membrane fouling. Specific conclusions which can be drawn from this study are:

1) Reverse osmosis can produce a water of about 50 mg/l TDS and about 3 mg/l of iron based on the AMD treated in this study.

2) This water is suitable for use as a water supply for industrial or municipal purposes.

3) To meet drinking water standards, treatment of the permeate from reverse osmosis will generally be required when the iron content in the feed water exceeds 100 mg/l.

4) Iron (II) in the presence of oxygen at a pH of 3.5 caused serious iron fouling of the membranes which resulted in a rapid decrease in product water flow.

5) This iron fouling is apparently a purely chemical reaction at the membrane surface.

6) A 5% solution of sodium hydrosulfite will effectively remove the iron precipitates from the membrane surface without impairing product water quality.

7) Water recovery rates of 80% can be obtained if the iron fouling problem is minimized.

8) Ten percent of the modules failed after 813 hours of operation.

9) Module failures were always associated with chemical cleaning of the membranes using sodium hydrosulfite.

RECOMMENDATIONS

Based on the results of this study, it is recommended that:

1) The mechanisms and methods for reducing iron fouling in reverse osmosis be evaluated in the laboratory using synthetic acid mine water.

2) Various sources of acid mine drainage be sampled at points within the mines or mine shafts to determine if acid mine water with extremely low dissolved oxygen can be obtained.

3) Possible alternate flow schemes be investigated in the laboratory to determine the most economical method of utilizing reverse osmosis in treating acid mine drainage. This would include possible preoxidation of the iron to reduce the fouling potential.

4) The significance of the laboratory data be evaluated by a field test period.

5) A detailed cost analysis for using reverse osmosis to treat acid mine drainage be prepared.

REVERSE OSMOSIS AND ITS APPLICATION TO ACID MINE DRAINAGE TREATMENT

Osmosis occurs if two solutions of different concentrations in the same solvent are separated from one another by a membrane. If the membrane is semipermeable, i.e., permeable to the solvent and not to the solute, solvent flow occurs from the more dilute to the more concentrated solution. This solvent flow continues until the two solutions are of equal concentration or the pressure on the more concentrated side of the membrane rises to a value called the osmotic pressure. If a pressure in excess of the osmotic pressure is applied to the more concentrated side of the membrane, the solvent can be caused to flow into the more dilute solution. This is termed reverse osmosis and is illustrated in Figure 1. From the above discussion, it may be concluded that the reverse osmosis process can be used to separate dissolved solids from water without a phase change (i.e., freezing or distillation).

The basic elements of a reverse osmosis system are shown in Figure 2. It may be seen from this figure that the reverse osmosis process produces two liquid streams. One stream, highly concentrated with the dissolved salts originally present in the feed stream, is called the concentrate or brine stream, while the water which has passed the membrane is called the permeate, or product water. The concentrate stream represents a potential pollution problem and disposal of this concentrate must be carefully considered in all reverse osmosis applications. The permeate is of high quality containing only small amounts of dissolved solids (1 to 3% of the salts in the feed stream), and is suitable for a wide variety of uses. The reverse osmosis system is very simple and consists basically of a pump and a membrane bank. A back pressure valve is required to hold the system at the desired pressure. These are usually spring loaded valves. Also shown in Figure 2 are the associated safety switches to provide for safe operation of the unit. The basic schematic shown in Figure 2 is common to all reverse osmosis systems. The difference between systems lies in the membrane bank which is discussed below.

There are a number of membrane systems (i.e., the method of packaging the membrane) available (3). However, there are only three forms which are commercially available in large quantities. These are spiral-wound, tubular, and hollow fiber membranes.

A spiral-wound (4) reverse osmosis module is shown in Figure 3. The module consists of one or more leaves wrapped around a product water take-off tube. These leaves consist of the membrane, porous incompressible product-water-side backing material, and brine-side flow spacer. The membrane is bonded along the two sides, at the end, and around the product water tube, forming a sealed envelope that encloses the backing material except at the product-water-tube open end. The brine-side flow spacer is placed on the membrane, and the several layers are then wrapped around the product-water-tube to form a cylindrical module. Modules are contained in a suitable pressure vessel, and the pressure vessels are grouped together to form the membrane bank portion of the reverse osmosis system. Membrane available

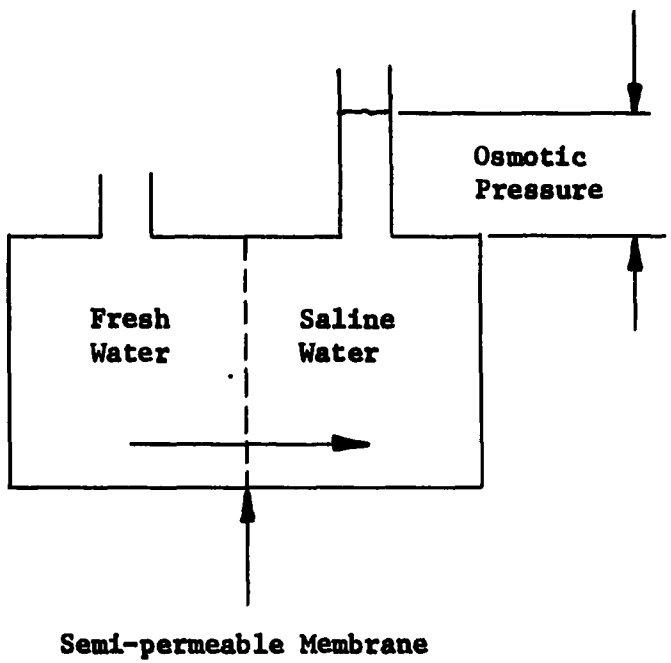

a) Normal Osmosis

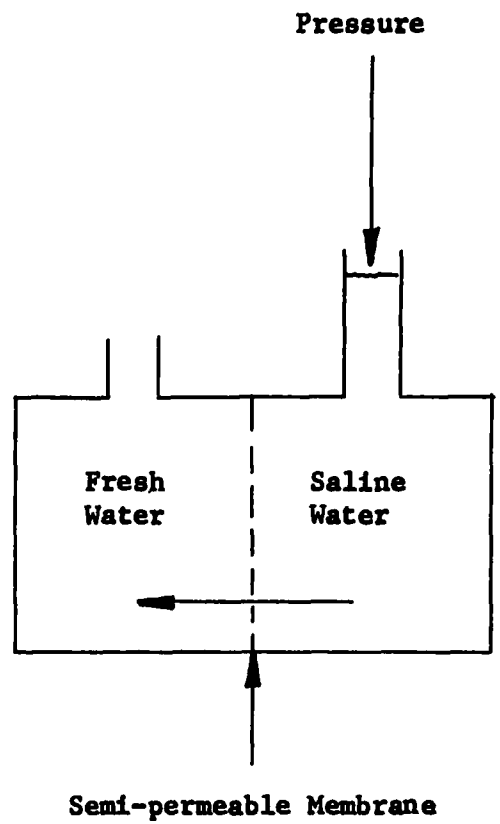

b) Reverse Osmosis

FIGURE 1
DESCRIPTION OF OSMOSIS

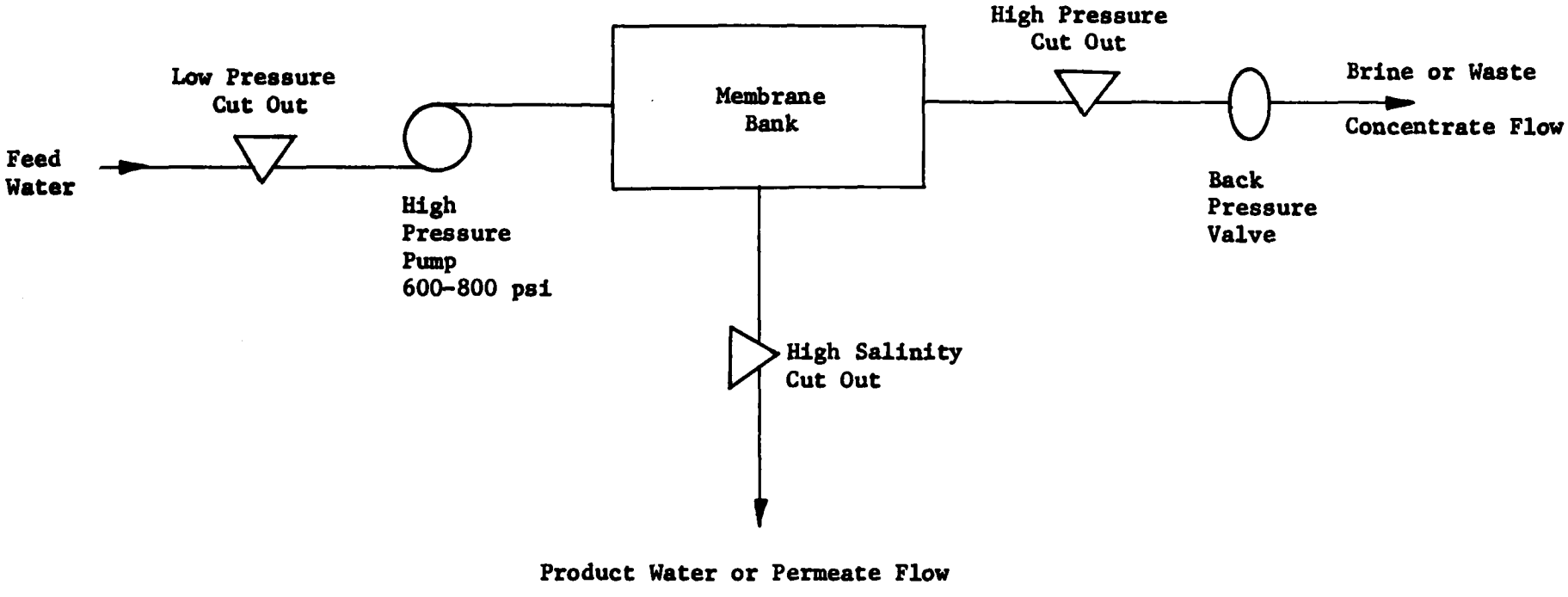

FIGURE 2
ESSENTIAL ELEMENTS OF A REVERSE OSMOSIS SYSTEM

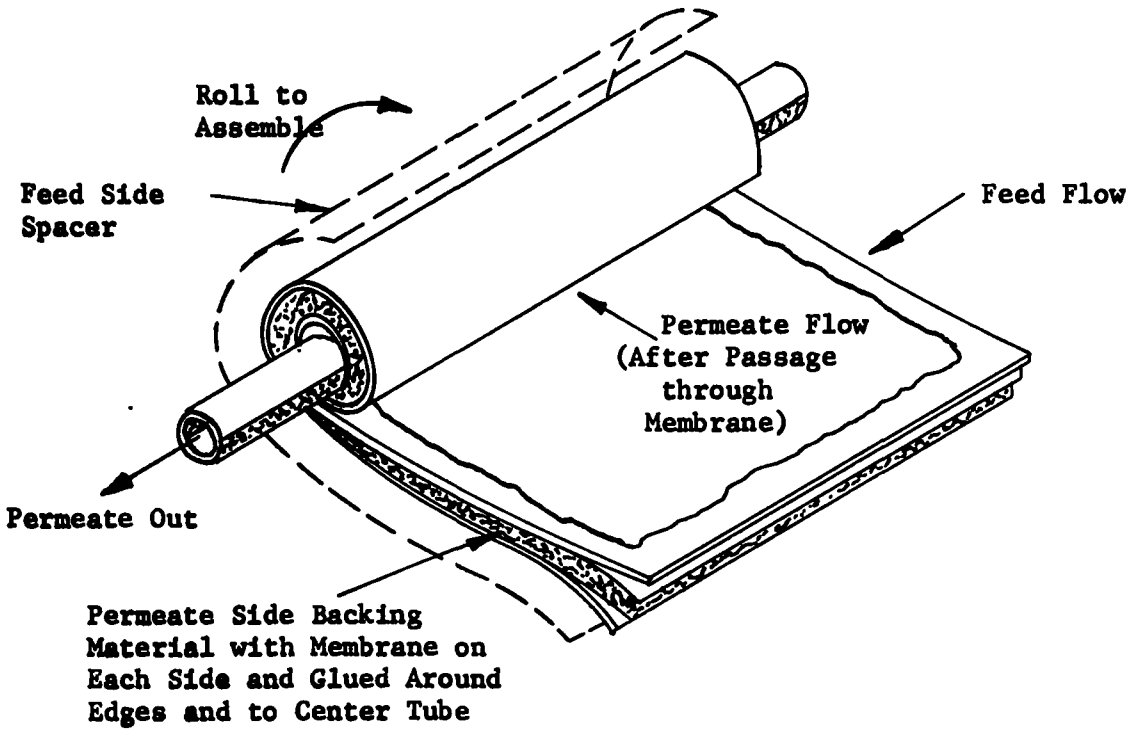

FIGURE 3
SPIRAL-WOUND MEMBRANE

for the spiral wound configuration are cast from a cellulose acetate solution.

A relatively new type of commercially available membrane is the hollow fiber. Hollow fiber membranes are spun into fine fibers of about 50 microns diameter. The fibers are then potted in epoxy resin in a sheet and tube configuration similar to a single ended heat exchanger. A sketch of a hollow fine fiber module is shown in Figure 4. The fiber wall is about 25 microns thick making a pipe type structure which can withstand the pressures needed in reverse osmosis. The flow of water is generally from the outside of the hollow fiber to the inside, which is exactly opposite conventional tube type reverse osmosis systems. Hollow fiber membranes are available in cellulose acetate and nylon (5).

In tubular membrane systems, the membrane is formed in a tubular shape generally one-half inch in diameter and several feet long. There are a number of different tubular systems which are commercially available. In some systems the membrane is cast directly onto a supporting tube, while in others the membrane is cast separately and later inserted into a supporting tube. Tubular type membranes were utilized in this study. They consisted of 1/2 inch diameter spun fiber glass tubes. The cellulose acetate membrane was cast directly onto the fiber glass tubes. Eighteen tubes connected in a series comprised a module, and 70 modules were utilized to form the membrane bank portion of the reverse osmosis system. A sketch of the tubular modules used in this study is shown in Figure 5.

There is no doubt that the reverse osmosis systems available today can produce a high quality water from acid mine drainage. There are, however, areas which must be investigated to determine the engineering feasibility and economic feasibility of operating this process on acid mine waters in large scale plants. These areas include maintenance of high flux rates, i.e., water permeation rate per square foot of membrane area, membrane life, permeate water quality, methods of disposal of the concentrate stream, membrane cleaning techniques, and the economic effects of these factors on water production costs.

There has been a limited amount of work done in the area of reverse osmosis application in acid mine drainage. Riedinger and Schultz (6) found that high quality water could be produced from acid mine drainage via reverse osmosis. The membrane system which was utilized was a spiral wound system (4). Feed water pH was 3 or less and contained about 100 mg/l of iron. Water recoveries in excess of 90% were reported, but some iron fouling of the membrane did occur, decreasing the product water output. Other investigations have also indicated problems with iron fouling of reverse osmosis membranes (7) (8) and it appears iron fouling and subsequent membrane cleaning is the most critical area in applying this process to the treatment of acid mine waters. Hill (1), however, reported on work being done at Norton, West Virginia, and indicated no problems with iron fouling were experienced. Salt rejections were 99%, but no permeation rates nor the length of the test run were reported. The majority of the iron was in the trivalent state and this may have some influence on membrane fouling. It is apparent from the above discussion that many technical areas require investigation in order to successfully apply reverse osmosis to the treatment of acid mine waters.

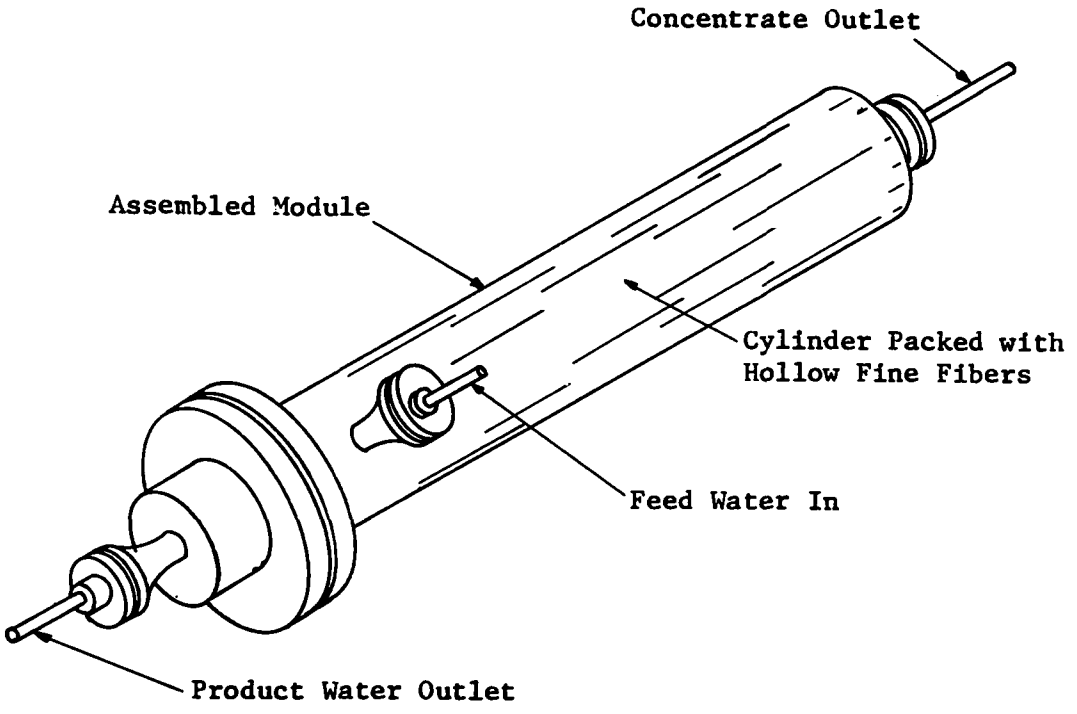

FIGURE 4
SKETCH OF HOLLOW FINE FIBER
REVERSE OSMOSIS MODULE

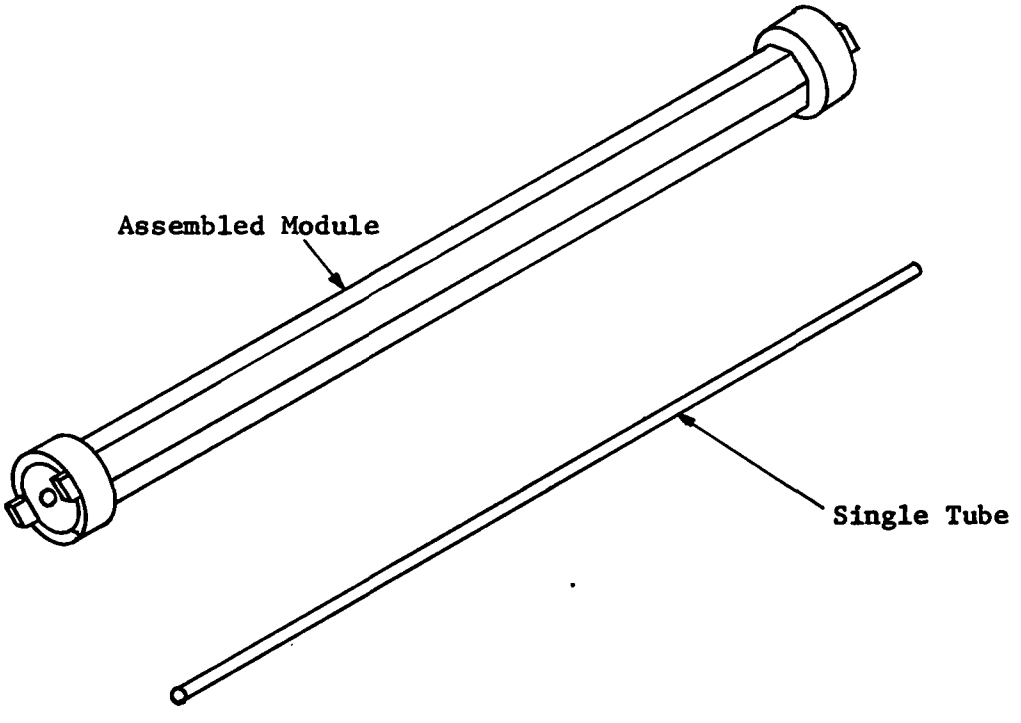

FIGURE 5
SKETCH OF THE TUBULAR MODULES
USED DURING THIS STUDY

DESIGN OF THE DEMONSTRATION UNIT

To provide basic design criteria for the reverse osmosis test unit, a 200 gallon sample of acid mine drainage (AMD) from the Mocanaqua discharge (a drain tunnel from an anthracite mine) was sent to Havens International, the supplier of the reverse osmosis test equipment for this study. Laboratory tests were performed on this water to determine the salt rejection properties and select the type of membrane to be utilized for the demonstration unit. The results of these tests are shown in Table 1. When collected the iron in the sample was predominately in the FeII state. By the time the sample reached the laboratory (one week), the iron had precipitated as a ferric oxide and the sample had the color of dilute orange juice. Laboratory testing was performed on the sample as received. Average total dissolved solids rejection was 96% at a water recovery of 85%. Values for specific ions are listed in Table 1. A continuous run of 70 hours showed no appreciable decrease in permeate flow rate. Based on these results, type 300 membrane was chosen for the demonstration unit. This membrane has a better than 95% rejection of divalent ions and a 60-90% rejection of monovalent ions, according to the manufacturer. The sizing of the unit resulted in the flow sheet presented in Figure 6. Seventy tubular modules were utilized in a three bank arrangement, each module containing 17.35 sq ft of membrane area, or a total of 1215 sq ft. The first bank which receives the raw feed water contains six rows of seven modules each (for a total of 42 modules). The concentrate from the first bank is routed into the second bank of modules, which contains four rows of five modules each (for a total of 20 modules). The third bank of modules receives the concentrate from bank two and contains two rows of four modules each (for a total of 8 modules). The concentrate from bank three was routed to waste. The permeate or product water from all banks is collected in a common header. The flow of permeate and concentrate is monitored using totalizing water meters. Associated hardware such as high and low pressure safety switches, salinity alarm, pH alarm, elapsed time meter, pressure gauges, and auxiliary pump is also provided. The main pressurizing pump is a Moyno progressive cavity pump. The entire system is mounted on a frame with openings for a fork lift truck. The unit is wired for 230/115 volt operation.

FIELD OPERATION AND EVALUATION

For ease of transportation and operation, the demonstration unit was mounted on a truck and transported to the test site near Shickshinny, Pennsylvania. The unit was operated continuously (24 hours per day) from October 10 through November 14, 1969 on AMD which had received no pretreatment. This represents 840 hours of possible operating time. Actual operating time recorded on the meter was 813.4 hours. The remaining hours (26.6) was down time due to module failures, power failures, and system maintenance. This represents a 97% on stream time which could be improved, since some module failures and/or power failures occurred during the night and were not corrected until morning when the operator came to check the unit. There were seven module failures which represents 10% of the modules in the unit. These module failures were always associated with a tube rupture and could be easily spotted by disassembling the module. The modules were then repaired by

Table 1

SUMMARY OF LABORATORY TEST RESULTS

Analysis	Raw Acid Mine Drainage (mg/l)	Product Water from Reverse Osmosis (mg/l)
Sodium (Na)	4.0	1.6
Potassium (K)	2.0	1.0
Calcium (Ca)	144.0	5.6
Magnesium (Mg)	80.0	4.4
Manganese (Mn)	17.0	--
Iron (Fe) (Total)	38.4	0.5
Chlorides (Cl)	5.0	4.0
Sulfate (SO_4)	750.0	32.0
Nitrate (NO_3)	0.9	0.6
Silica (SiO_2)	14.0	12.0
Total Dissolved Solids (Analysis)	1228.0	50
Total Dissolved Solids (Calculated)	1055	61
pH	3.2 units	4.3 units

Test Conditions:

Operating Pressure	600 psig
Product Water Recovery	85%
Average Permeate Rate	8.2 gsfd
Feed Temperature	20-25° C
Length of Test	70 hours
Sample Taken in May 1969	
Type 300 membrane	
Tests Run 12-16 May 1969	

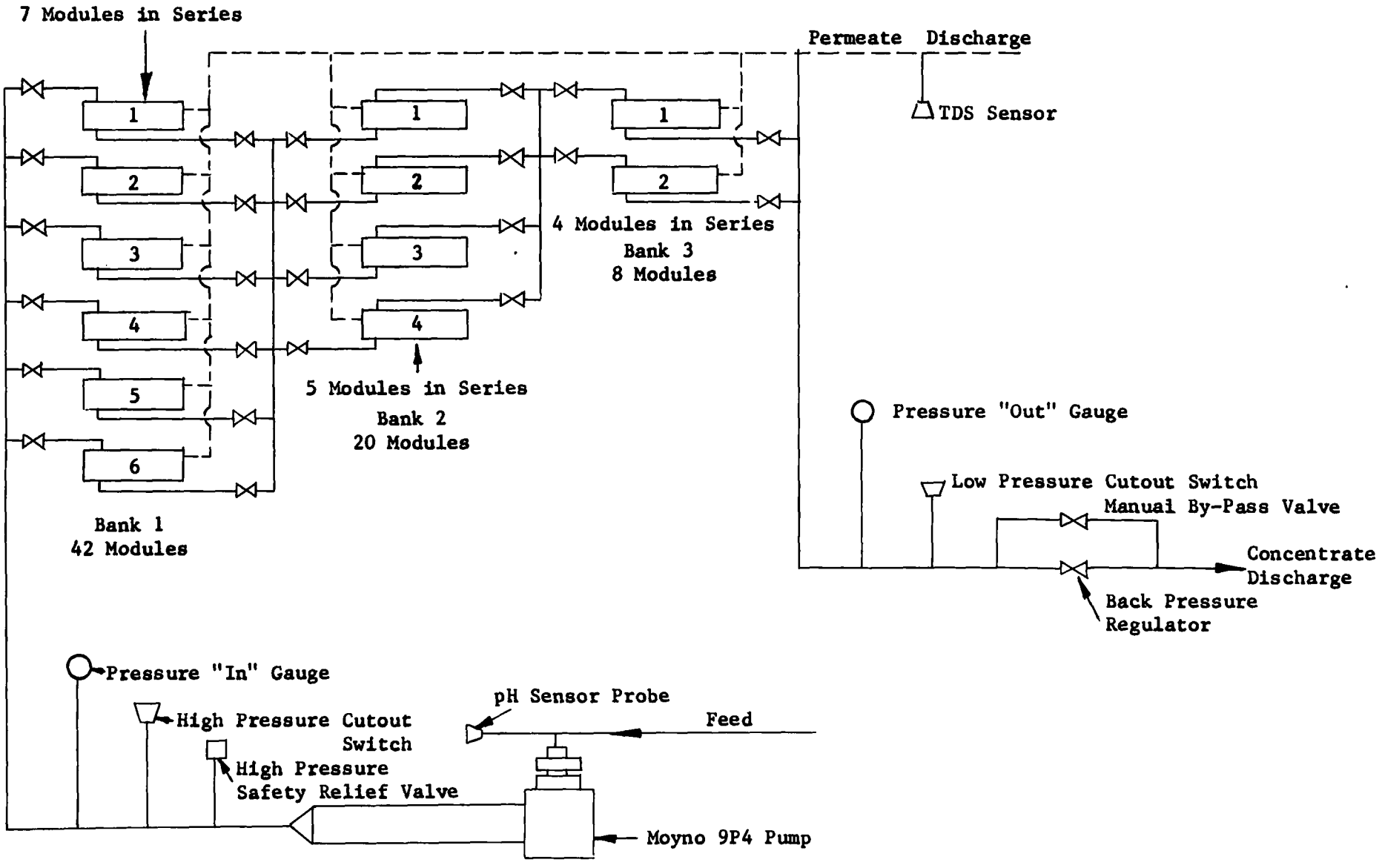

FIGURE 6
SCHEMATIC FLOW SHEET
FOR DEMONSTRATION UNIT

replacing the ruptured tubes.

The feed water and permeate flow data for the entire experimental run is plotted in Figure 7. The permeate rate in both gal/hr and gal/sq ft (day) is plotted as a function of operating time. During the first 250 hours of operation the permeate rate declined steadily from 400 gal/hr to 150 gal/hr. During this decline the concentrate stream remained clear; however, a very small amount of orange and black particles were occasionally observed during the twice daily 5 minute flush at reduced pressure. The permeate rate then remained steady for about 100 hours at an average value of 140 gal/hr. At about 330 hours, the flux again began to decline. This decline was possibly due to the discharge of gelatinous precipitated iron slurry near the intake of the RO unit. This discharge was a result of the coal washing operations in the area. This ferric precipitate was observed in the concentrate stream shortly after the discharge at the intake. At 403 hours a module was removed from the unit and disassembled. Upon inspection, it was found that the membranes were coated with a brown precipitate. Analysis of this material indicated 47% was iron (as Fe), 4.7% sulfate, and less than 1% calcium. The fouling was, therefore, due mainly to oxidation of iron (II) to iron (III) and precipitation of the ferric compounds at the membrane surface, i.e., the point of highest concentration. In an attempt to clean the membranes, they were flushed with a 5% solution of ammonium per sulfate [$(NH_4)_2S_2O_8$]. This chemical did not dissolve the scale, but loosened it and caused it to slowly slough from the membrane. Red flakes were evident in the concentrate stream during the two daily reduced pressure flushes, which were at this time increased from 5 to 15 minutes. At 450 hours the unit was flushed overnight with a phosphoric acid solution. This also caused flaking of the coating on the membrane and a slow but steady increase in permeate flow rate.

The module which had been disassembled was tested to determine what chemical could best be utilized to dissolve the iron coating from the membrane. After discussions with the membrane manufacturer, it was discovered that a 5% sodium hydrosulfite ($Na_2S_2O_4$) solution would remove the scale. At 609 hours the unit was flushed with sodium hydrosulfite, resulting in a dramatic increase in permeate flow rate from 100 to 310 gal/hr. This represents essentially a complete restoration of flux, considering some of the original flux would be lost due to compaction of the membrane when operating at 600 psig. The expected flux decline due to compaction has been plotted in Figure 7, and indicates a 100 percent restoration of flux would have resulted in a product water rate of about 320 gallons per hour instead of the 310 gph observed. Shortly after the sodium hydrosulfite wash a module failed. This was the first module failure in over 600 hours of operation, but it did not seem likely that the chemical flushing should cause this failure.

After putting the unit back on stream the permeate rate again began to decline. At 733 hours 50% of the permeate flow had been lost. Another sodium hydrosulfite wash was performed, and again the permeate rate was increased from 150 to 300 gal/hr. Shortly after this second wash two modules failed and it appeared that there may be some correlation between washing and module failure.

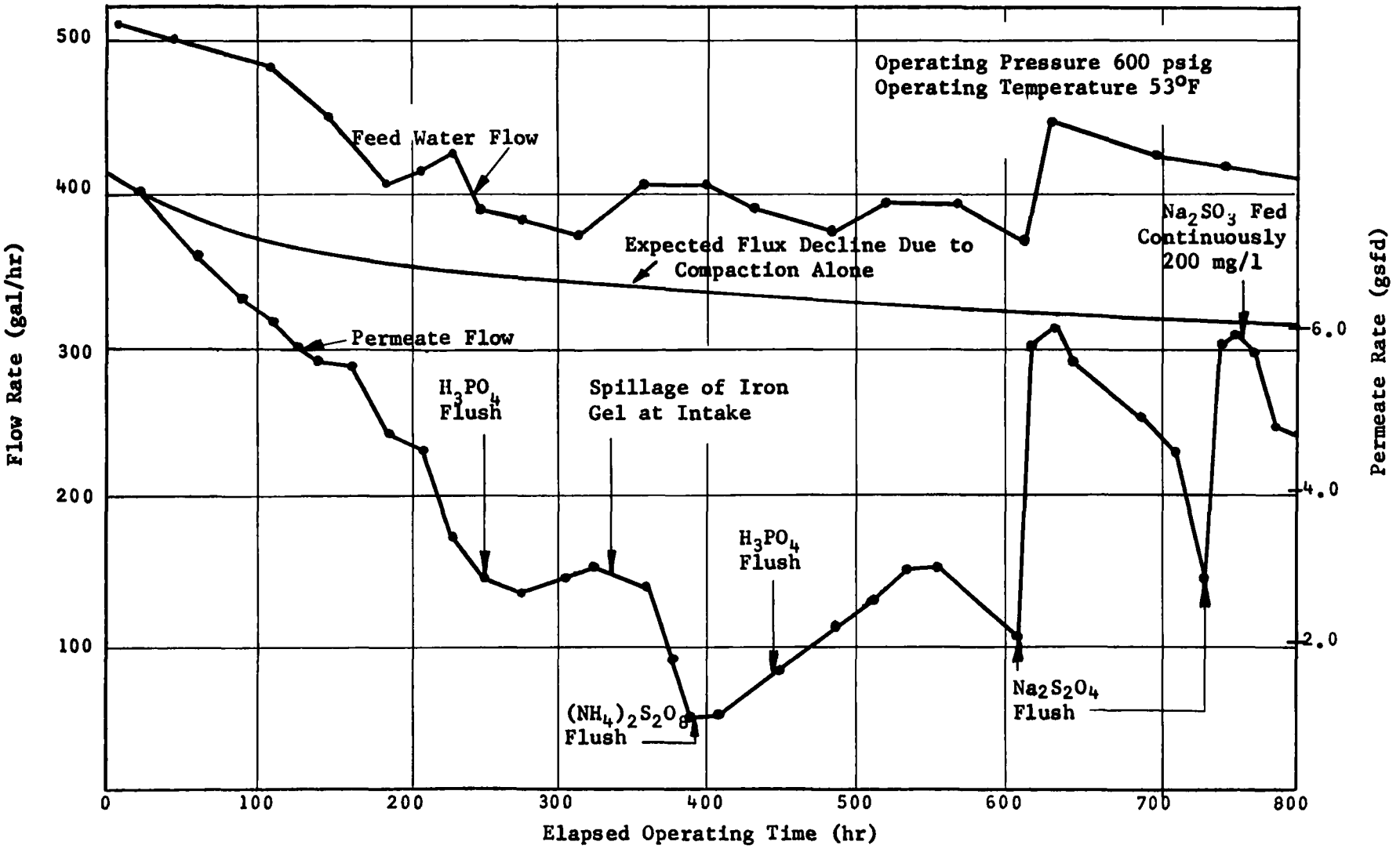

FIGURE 7
SUMMARY OF FLOW DATA

The acid mine discharge was monitored for dissolved oxygen and was found to contain 2.9 mg/l of oxygen at the point of discharge from the mine and 4.9 mg/l of oxygen at the intake of the demonstration unit. Sodium sulfite was added in the feed line to remove the oxygen. It was thought that removal of the oxygen would eliminate the flux decline due to iron fouling, by eliminating iron oxidation. Sodium sulfite was added at a rate of 200 mg/l, but even at this concentration it was not possible to remove all the oxygen as the concentrate (brine) still contained 1.4 mg/l of O_2. The inability to obtain "0" dissolved oxygen could have been caused by the slow reaction of sodium sulfite with the oxygen present in the mine water, since the sodium sulfite was not cobalt catalyzed, and the water temperature was quite cold. Other possibilities include air entering the system through the hoses or pumps. The permeate rate continued to decline during the sulfite addition. It was also noted that the sulfite did cause a precipitate to form in the feed stream and this also could have had an effect on the permeate flow rate. As a result of these problems, reduction of iron oxidation and permeate rate decline did not occur.

At 813 hours the unit was taken off stream and again washed with sodium hydrosulfite to remove any iron fouling. After washing, the unit was put into operation on tap water and a module failure occurred within two hours, further supporting the possibility that sodium hydrosulfite washing could be linked to module failures.

The water recovery rates may also be seen in Figure 7. In general, the feed water to the unit was reduced as the permeate rate declined. Because of the flow configuration of the unit, there was a limit to how low the feed flow rate could be reduced and still maintain turbulent flow throughout the unit. This lower limit was selected as 1 gpm per module row, which was equivalent to 360 gallons per hour total raw flow. As a result of this limitation, the water recovery varied from 80% to as low as 15%. The recovery was held essentially constant over the first 200 hours at 75-80%. During this period no precipitation was noted in the brine stream. This would indicate that an 80% recovery is attainable, if a solution to the flux decline problem is found.

The water quality of the permeate is plotted as a function of time in Figure 8. As may be observed, permeate water quality was essentially constant during the first 400 hours of operation, even though the permeate flow rate was steadily decreasing. After 400 hours, when the precipitated iron began to flake from the membranes, a general increase in all measured values was observed. The values again stabilized shortly after 400 hours and remained relatively constant throughout the remainder of the test. By again observing Figure 8, it can be seen that no change in permeate quality occurred after flushing the unit with sodium hydrosulfite at 617 and 733 hours. This indicates the permeate rates can be restored without impairing permeate water quality. A summary of the water analyses is shown in Table 2. The analyses which were performed included calcium, magnesium, manganese, iron, copper, sulfate, chloride, nitrate, nitrite, and phosphate. Of these analyses, chloride, nitrate, nitrite, phosphate and copper were present in only trace quantities (0.1 - 0.3 mg/l). Analyses for these ions were discontinued after 100 hours of operation.

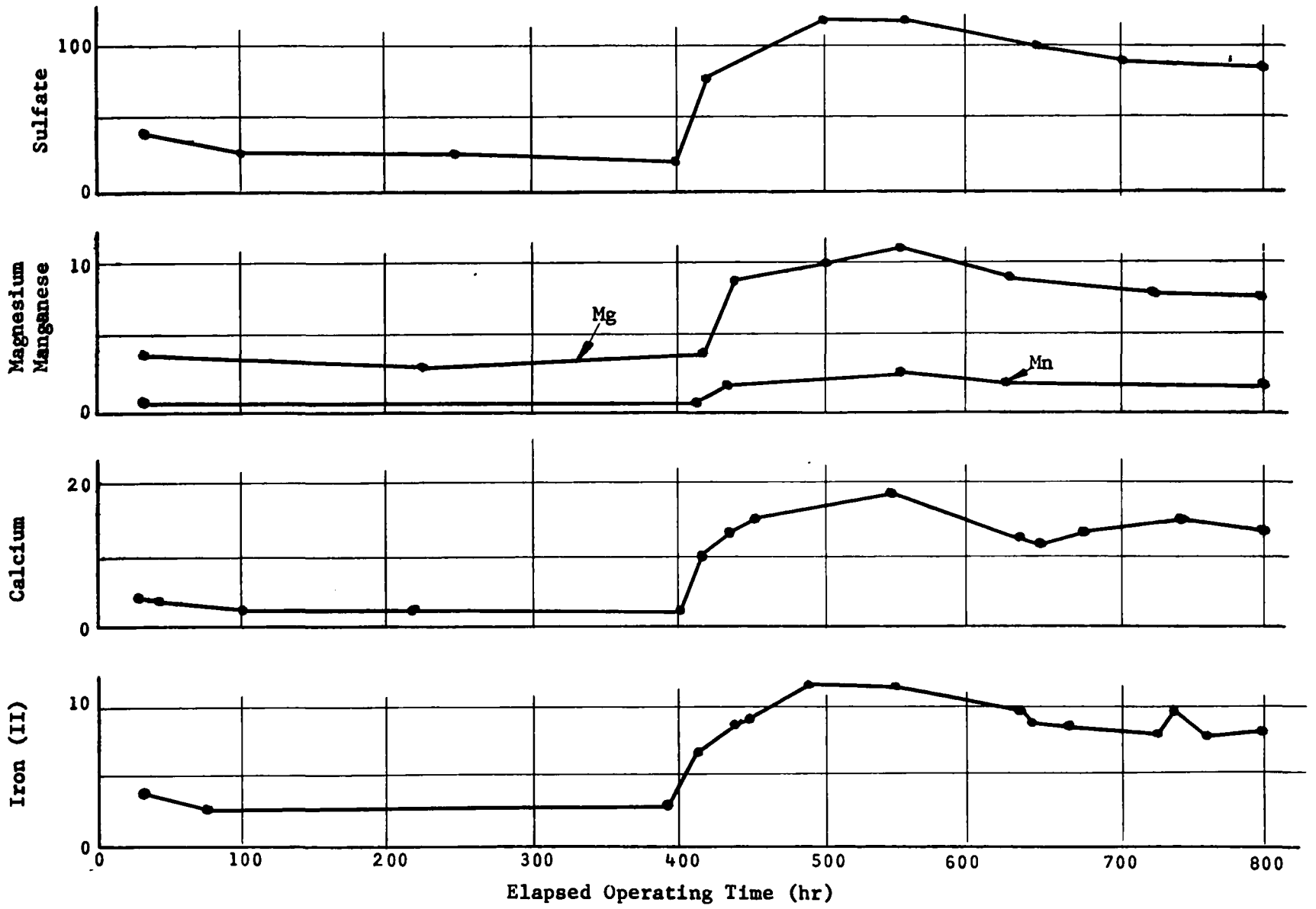

FIGURE 8
VARIATION IN PERMEATE WATER QUALITY

Table 2

WATER QUALITY DATA

	Analysis Performed in Field - Shickshinny, Pennsylvania					Analysis Performed at Rex Chainbelt Laboratory - Milwaukee		
Ion	Feed Water (mg/1)	Product Water (mg/1 0-400 hrs)	Rejection (%)	Product Water (mg/1 400-800 hrs)	Rejection (%)	Feed Water (mg/1)	Product Water (mg/1 0-400 hrs)	Product Water (mg/1 400-800 hrs)
Calcium	141 ± 1	3.2 ± 0.9	97.7	13.9 ± 2.8	90.1	143	2.8	11.3
Magnesium	101 ± 5	2.9 ± 0.3	97.1	8.2 ± 2.1	91.8	100	1.9	8.1
Manganese	16 ± 2	0.43 ± 0.2	97.4	1.5 ± 0.2	92.1	16.4	0.4	0.4
Iron [1]	118 ± 5	3.0 ± 0.4	97.3	9.3 ± 1.4	90.5	131	3.7	6.6
Sulfate	1106 ± 35	31.4 ± 5	97.2	98.0 ± 10	91.1	792	36	40
pH	3.6	4.1 - 4.4		4.1 - 4.4		3.2	4.1	4.6
Total Dissolved Solids	1150	47		130		1760	57	128

[1] All iron in Fe^{++} state.
Field data based on approximately 35 separate analyses.
Confidence level at 99%.

[2] TDS analysis by conductivity meter in field and by evaporation in laboratory.

It may be seen from Table 2 that rejection ratios for the first 400 hours ranged from 97 to 98% and that this ratio decreased to 91 to 92% during the second half of the run. During the field testing three sets of samples were shipped to Rex's laboratory in Milwaukee for analyses. These analyses were conducted in accordance with Standard Methods (9). The average of these analyses (shown in Table 2) compared well with the field analyses which were performed with a Hach water analysis kit (#EL-DR).

The only analysis which did not correlate well was sulfate, and in both analysis procedures a turbidimetric method was utilized in which a ±10% accuracy is the best to be expected (9). By assuming the only ions present were calcium, magnesium, manganese, iron and sulfate, an ion balance was performed. These balances are shown in the Appendix (Tables 5, 6, 7). An excess of negative ions (sulfate) was almost always present, indicating that the actual sulfate concentration was probably closer to the laboratory analysis than the field analysis of Table 2.

DISCUSSION OF RESULTS

The quality of the permeate during the first 400 hours of the experiment was very good. Total dissolved solids was about 50 mg/l. Iron and manganese were, however, higher than the recommended drinking water quality standards set by the Public Health Service (10) of 0.3 mg/l iron plus manganese. The excess iron and manganese should be removable by a variety of processes in conventional water treatment plants (11). Hence, the permeate would be suitable as a drinking water source. The iron and manganese content in the permeate could also be reduced by using a reverse osmosis membrane which would reject a higher percentage of the dissolved salts. The results of a laboratory study to determine iron rejections with various types of membranes is shown in Table 3. The iron content was reduced to as low as 0.5 mg/l which represents a 99.7 overall iron rejection at 85% water recovery. To achieve these rejections, the rate of permeate flow per square foot of membrane area is reduced, requiring significantly more membrane area. Even at 99.7% rejection, the iron content does not meet drinking water standards. It appears, therefore, that some type of post treatment of the permeate will be required whenever the iron content in the feed water is above 100 mg/l and it is desirable to meet drinking water standards. When treatment of the permeate is required, the use of a more open type of membrane will generally produce the most economical operation.

The permeate produced during this study had very little buffering capacity. Titration curves of a sample of permeate and raw acid mine drainage are shown in Figures 9 and 10. The raw water had an acidity of 400 mg/l while the permeate had only 36 mg/l. This represents 91% removal of acidity, and indicates that neutralization of the permeate by adding a base or dilution with an existing water supply would pose no problems and be relatively inexpensive.

The permeate water quality change which occurred at about 400 hours of operation (Figure 8) was initially thought to be caused by a leaking module. At 498 hours a check on the permeate salinity from each individual module was made. The results of these analyses are shown in Table 4. The highest individual module salinity was 230 mg/l. In

Table 3

IRON REJECTION WITH VARIOUS POROSITY MEMBRANES
SYNTHETIC ACID MINE WATER[2]

Membrane Type[1]	Relative Flux Rate %	Iron in Feed mg/l	Iron in Permeate (∿30% Recovery) mg/l	Iron in Permeate @ 88% Recovery[3] mg/l
300	100	125	1.0	1.9
400	75	125	0.65	1.2
500	50	125	0.28	0.5

[1] Membranes manufactured by Havens International.

[2] Test run on synthetic acid mine water of same composition as shown in Table 2.

[3] Calculated value.

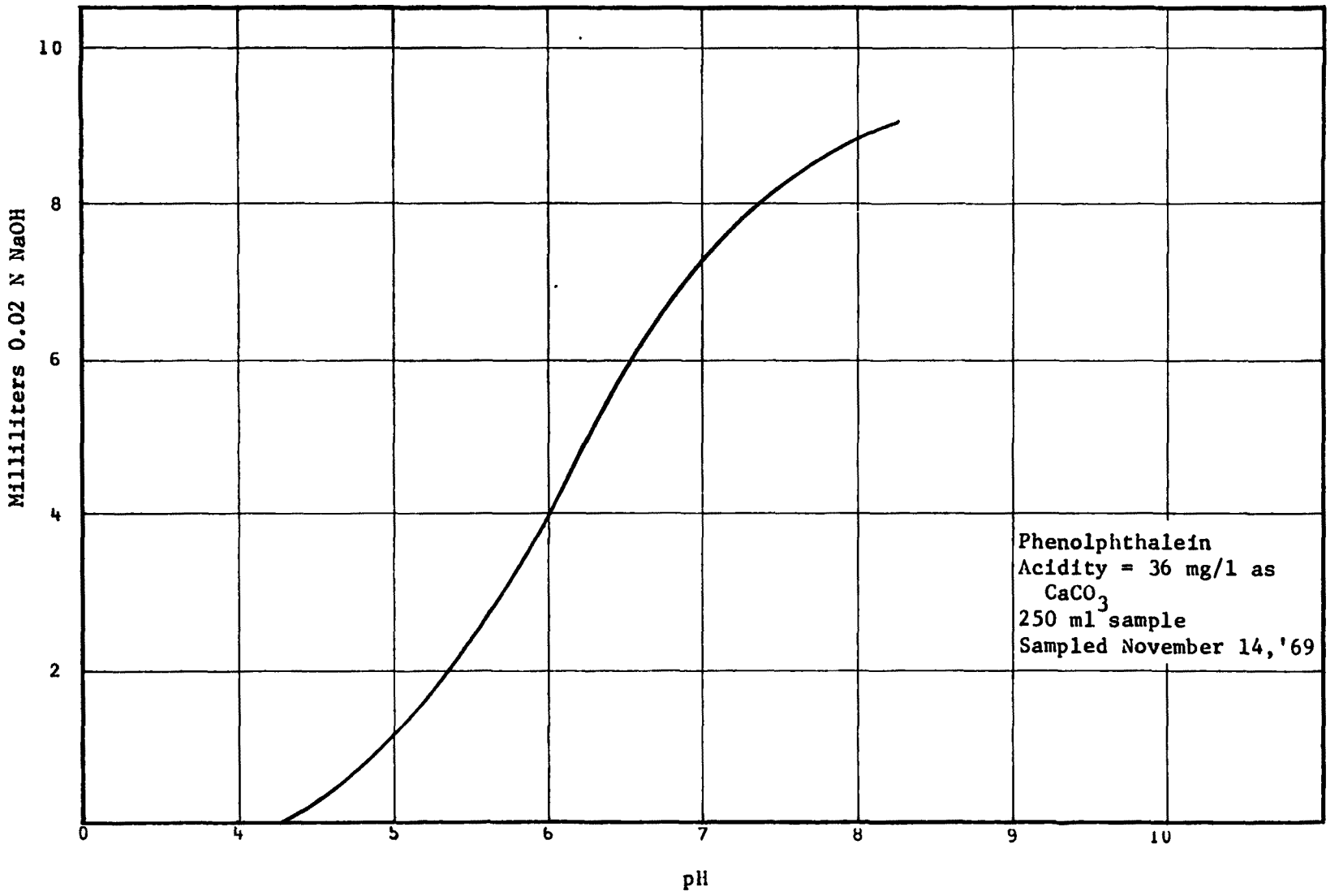

FIGURE 9
TITRATION CURVE - PERMEATE FROM REVERSE OSMOSIS TEST UNIT

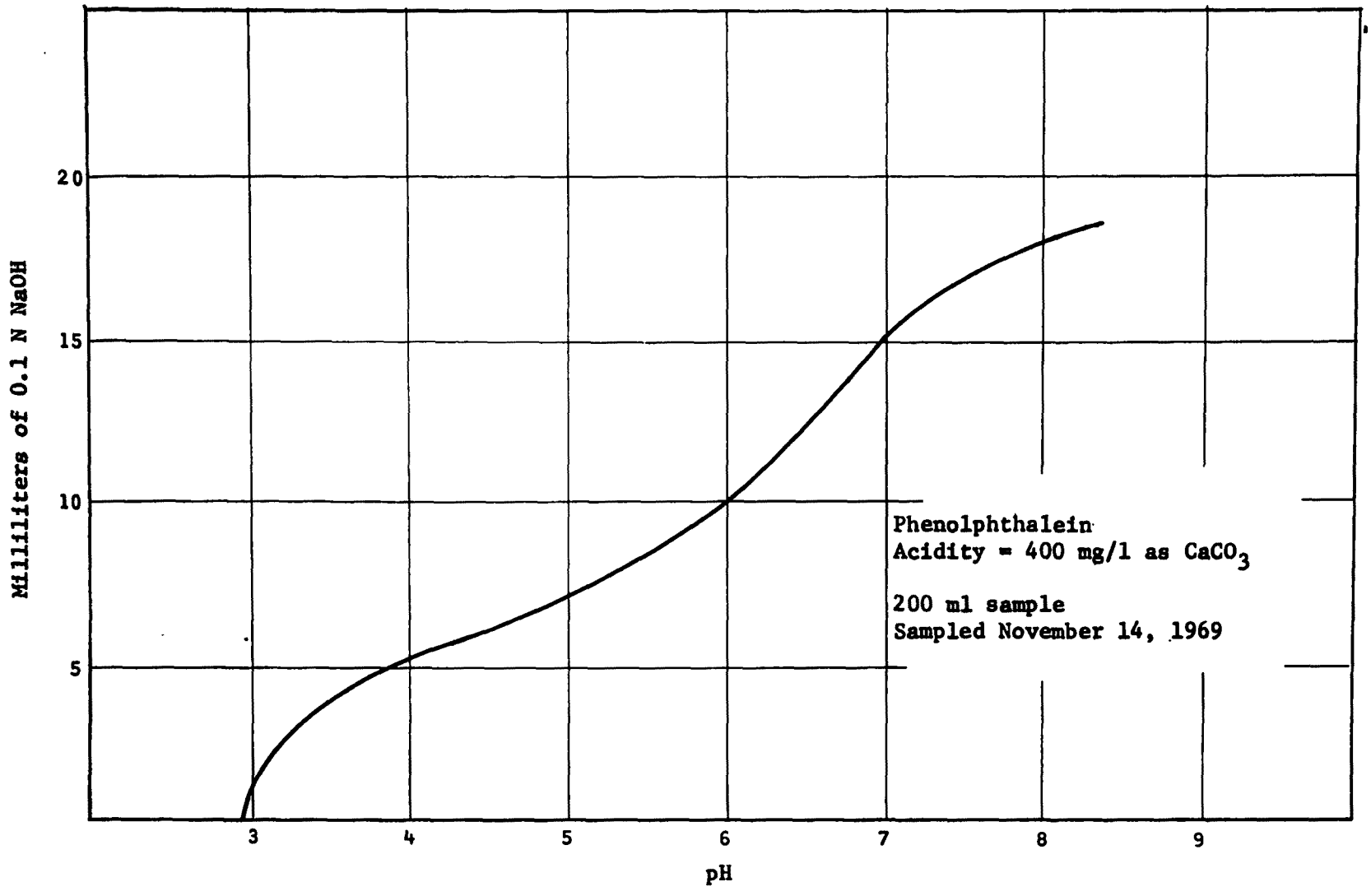

FIGURE 10
TITRATION CURVE - ACID MINE DRAINAGE
MOCANAQUA, PENNSYLVANIA

Table 4

PERMEATE QUALITY FROM INDIVIDUAL MODULES

Module Bank	Row No.	Module Number 1	2	3	4	5	6	7
1	1	62	173	150	178	220	230	165
1	2	117	130	142	158	162	170	222
1	3	122	160	175	129	150	180	203
1	4	100	150	155	166	160	200	173
1	5	110	148	142	200	190	160	222
1	6	131	171	180	220	200	170	170
2	1	180	183	150	174	189		
2	2	193	190	196	209	210		
2	3	160	168	210	173	194		
2	4	133	152	175	184	200		
3	1	137	102	116	102			
3	2	129	113	115	106			

Data taken at 498 hours.
All values in mg/l total dissolved solids with Myron L Dissolved Solids Meter.
Average salinity 160 ± 20 at 99.999% confidence level.

general, the salinities were very consistent throughout the unit, indicating the permeate quality deterioration was not due to an individual module failure. Other events which occurred at about the time of this marked salinity change include a phosphoric acid wash, and an ammonium persulfate wash. Both of these washes were conducted at a pH of 3 or above, so accelerated hydrolysis of the membrane does not seem likely. During the ammonium persulfate wash the unit was accidently drained of water for a period of about 15 minutes. It was thought that this drainage caused partial dehydration of the membranes and was the cause of the change in permeate water quality. The manufacturer of the membranes, however, indicated that this period of time should not have caused membrane damage. Another event occurring in the range of 400-450 hours was the presence in the concentrate stream of red flakes of iron. Apparently the chemical flushing had loosened the iron scale which was on the membrane and caused the flaking. This flaking could possibly have caused membrane damage. Although it is not possible to definitely determine the cause of this increased salt flux, it is felt, had the membranes not been allowed to become so heavily coated with iron, the observed change in salt flux would not have occurred.

Another extremely important problem which developed during this study was that of maintaining high permeation rates. As was shown in Figure 7, the product water output from the unit would decline rapidly until very little product water was being produced. Sodium hydrosulfite was found to be effective in restoring the product water rate, but of course did not remove the source of the fouling. The fouling was definitely associated with the oxidation of iron (II) to iron (III) and subsequent precipitation of a ferric hydrate on the membrane surface. This precipitate was not present in the brine stream and therefore was occurring only at the membrane surface where the concentration of ions is greatest. This precipitation could have been a result of chemical oxidation, biological oxidation, or a combination of both types of oxidation.

The rate of chemical oxidation of iron (II) to iron (III) is a function of iron (II) and oxygen concentrations at the pH values of the mine water in this study (12) (13). Singer and Stumm (13) report only 2 to 3% of the iron (II) present in a synthetic acid mine water at pH 3 was oxidized in three months time. Kim (12), however, reports much higher rates on natural acid mine samples, but this could be accounted for by possible bacterial oxidation of the iron. Since the iron is being removed at the surface of the membrane, and the concentration at the surface of the membrane could reach as high as 5-10 times the feed stream concentration (14), this could greatly accelerate the oxidation. Considering the concentration of iron present in the feed waters utilized in this study, about 10 pounds of iron was pumped through the unit daily. Assuming the reaction rates presented by Singer and Stumm (13) were increased 5 fold due to the concentration at the membrane surface, this would represent about a tenth of a pound of iron per day being oxidized to the trivalent state and deposited on the membranes. Mass balances for iron as well as the other ions present in the mine drainage are presented in the Appendix (Tables 8 through 12). The iron balances check within ±6% and show no trend which would indicate plating of iron on the membrane. This is expected, since the probable amount of iron being precipitated is much lower than the error in the mass balance. It seems reasonable to assume

that this quantity of iron could cause a serious flux decline, since other investigations have indicated iron fouling problems at much lower iron concentrations than those found in this study.(7)(8)

In an attempt to determine if bacterial oxidation was a factor in the iron fouling problem, a synthetic acid mine water sample was prepared. Three modules from the experimental field unit were installed in a laboratory test rig and operated on this synthetic water for a period of 46 hours. The water was disinfected with "Rocall" a commercial disinfectant to insure a minimum of biological activity. The synthetic water was mixed to closely simulate the composition of the actual mine drainage shown in Table 2. The permeate rate from this test is plotted as a function of time in Figure 11, and also plotted in Figure 11 is the change in permeate rate of the field unit over a comparable time period using the average permeate decline rate during the first 250 hours of the field test. As may be seen, the slopes of the lines for the two curves are almost identical. This would indicate that the iron fouling problem is due to a purely chemical reaction at the membrane surface. More research, however, is needed in this area to define adequately the fouling mechanisms. Regardless of the exact mechanism of fouling, if there were no oxygen in the feed stream, neither chemical or biological oxidation could occur, since the iron bacteria are strict aerobes and need oxygen in their metabolic cycle (15). These facts indicate complete removal of oxygen from the feed stream could eliminate or greatly reduce the fouling problems associated with iron.

Based on the data obtained in this study, it appears that it will be technically feasible to utilize reverse osmosis in the treatment of acid mine drainage, and a product water of high quality can be produced. More research is needed on the causes of iron fouling, so that adequate steps can be taken to minimize this problem. Until additional studies are made, it is not possible to accurately predict the cost of treating acid mine drainage by reverse osmosis, since membrane life and chemical costs for cleaning the membrane are unknown.

Another important area of consideration is determination of the best position for the reverse osmosis unit in the flow sheet for an acid mine drainage treatment system. Preoxidation of the iron may result in longer membrane life and reduction in chemical cleaning costs. Since membrane life is also a function of pH, more economical operation may be obtained by operating on preoxidized feed waters at near neutral pH. Other factors which influence the flow sheet configuration include brine disposal and raw water quality. Hence, many factors must be evaluated to determine the best flow sheet for economical treatment of acid mine drainage using reverse osmosis.

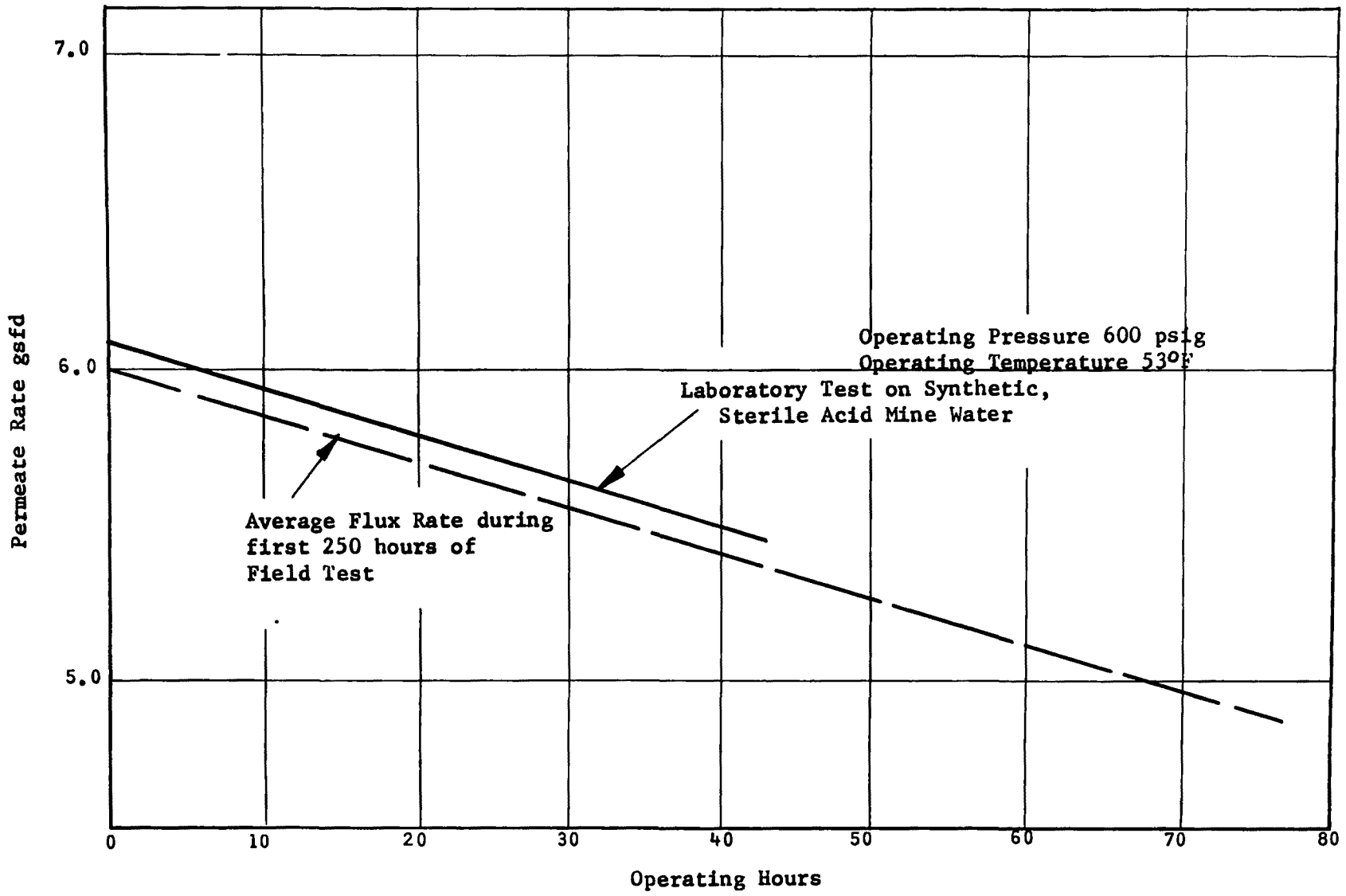

FIGURE 11
COMPARISON OF THE RATE OF FLUX DECLINE
IN THE FIELD AND LABORATORY

BIBLIOGRAPHY

1. Hill, Ronald D. "Mine Drainage Treatment State-of-the Art and Research Needs". U.S. Department of the Interior, Federal Water Pollution Control Administration, Mine Drainage Control Activities; Cincinnati, Ohio 45226, December 1968.

2. Barnes, H. L. and Romberger, S. B. "Chemical Aspects of Acid Mine Drainage", Journal Water Pollution Control Federation, 40:3:371 (1968).

3. Patterson, D., "Membrane Compete for Separations Market", Chemical Engineering, p. 38, (June 3, 1968).

4. Sudak, R. G., and Nusbaum, K., "Pilot Plant Operation of Spiral-Wound Reverse Osmosis Systems", Gulf General Atomic Bulletin GA-8515.

5. Anonymous. "It's Full Speed Ahead for Reverse Osmosis", Chemical Week, Aug. 3, 1968, pg. 40.

6. Riedinger, A., and Schultz, J. "Acid Mine Water Reverse Osmosis Test at Kittanning, Pennsylvania. Research and Development Progress Report #217, Office of Saline Water, Washington, D.C. (1966).

7. Furukawa, D., "Flushing Techniques to Restore Flux in Reverse Osmosis Plants", Division of Research, U.S. Bureau of Reclamation, December 16, 1968.

8. Nusbaum, I., et al, "Reverse Osmosis Membrane Module", Research and Development Report #338, Office of Saline Water, Washington, D.C. (March 1968).

9. "Standard Methods for Examination of Water and Waste Waters", APHA, AWWA, WPCF. American Public Health Association, New York, New York, Twelfth Edition (1965).

10. "Drinking Water Standards", U.S. Department of Health, Education and Welfare", Public Health Service, Washington, D.C. (1962).

11. American Water Works Association "Water Quality and Treatment", AWWA Manual, Second Edition, 1951, ppg. 359-368.

12. Kim, Am G., "An Experimental Study of Ferrous Iron Oxidation in Acid Mine Water". Presented Second Symposium on Coal Mine Drainage Research, Mellon Institute, Pittsburgh, Pennsylvania, May 14-15, 1968.

13. Singer, P. and Stumm, W., "Kinetics of the Oxidation of Ferrous Iron". Presented Second Symposium on Coal Mine Drainage Research, Mellon Institute, Pittsburgh, Pennsylvania, May 14-15, 1968.

14. Merten, U., "Desalination by Reverse Osmosis". The M.I.T. Press, Cambridge, Massachusetts, 1966.

15. Starkey, Robert L., "Transformations of Iron by Bacteria in Water", Journal American Water Works Association, 37:(1945) pg. 963.

ACKNOWLEDGMENTS

The study reported herein was performed by the Technical Center of Rex Chainbelt Inc., Milwaukee, Wisconsin, via a contract with the Commonwealth of Pennsylvania, Department of Mines and Mineral Industries. The report was authored by Donald G. Mason, Manager, Systems Research. Partial funding for this project was provided by the Federal Water Pollution Control Administration, Department of the Interior under Grant No. 14010 DYK. Technical assistance was provided by Havens International. Assistance in site selection and obtainment of easements was provided by personnel of the Department of Mines and Mineral Industries, Commonwealth of Pennsylvania.

PUBLICATIONS

Results of this study will be presented in a paper entitled, "Treatment of Acid Mine Drainage by Reverse Osmosis." This paper will be presented at the Third Symposium on Coal Mine Drainage Research, at the Mellon Institute, Pittsburgh, Pennsylvania on May 19-20, 1970.

APPENDIX

Table 5

PRODUCT WATER (PERMEATE) ION BALANCE

Elapsed Operating Time	Calcium (Ca^{++}) +	Magnesium (Mg^{++}) +	Maganese (Mn^{++}) +	Iron (Fe^{++}) +	Sulfate $(SO_4)^{--}$ -	Summation of Ions
30	10	15	.9	6.1	41.6	-9.6
310	0	20	0	7.9	49.9	-22.0
355	5	17	.5	6.8	30.2	-0.9
452	35	35	3.1	16.1	106.1	-16.9
465	36	35	2.3	17.0	109.2	-18.9
480	39	40	3.3	18.8	119.6	-18.5
506	40	44	3.2	20.6	122.7	-14.9
530	45	45	3.6	21.0	131.0	-16.4
555	43	42	3.9	21.0	124.8	-14.9
580	40	38	3.2	19.3	114.4	-13.9
605	47	33	2.0	11.9	78.0	+15.9
634	33	36	2.3	17.0	105.0	-16.7
650	31	33	2.7	15.2	93.6	-11.7
675	34	32	2.5	15.0	91.5	-8.0
720	32	32	2.7	14.3	88.4	-7.4
739	38	32	2.6	16.8	99.8	-10.4
755	33	32	2.5	14.5	95.7	-13.7
807	33	30	2.7	15.0	87.4	-6.7

All values in mg/l as $CaCO_3$.

Table 6

FEED WATER ION BALANCE

Elapsed Operating Time	Calcium (Ca^{++}) +	Magnesium (Mg^{++}) +	Manganese (Mn^{++}) +	Iron (Fe^{++}) +	Sulfate $(SO_4)^{--}$ -	Summation of Ions
30	350	425	29	202	1196	-190
124	350	425	--	--	--	--
165	340	440	--	--	--	--
256	175	605	--	--	--	--
310	180	520	--	260	1352	-392
355	250	500	35	188	1040	-67
390	350	430	--	--	--	--
410	350	430	--	--	--	--
452	360	420	32	206	1144	-126
465	358	417	24	215	1144	-130
480	360	395	26	215	1196	-200
506	360	416	27	213	1196	-180
530	358	418	32	204	1118	-106
555	360	420	35	206	1092	-71
580	357	419	29	211	1144	-128
605	356	409	28	204	1108	-111
634	355	425	20	211	1118	-107
650	360	420	28	213	1066	-45
675	356	444	28	215	1118	-75
720	370	450	34	202	1092	-36
739	365	455	33	208	1118	-57
755	360	460	32	209	1118	-57
807	365	455	32	215	1378	-311

All values in mg/l as $CaCO_3$.

Table 7

BRINE (CONCENTRATE) ION BALANCE

Elapsed Operating Time	Calcium Ca^{++}	Magnesium (Mg^{++})	Manganese (Mn^{++})	Iron (Fe^{++})	Sulfate $(SO_4)^{--}$	Summation of Ions
		+	+	+	-	
30	1600	1800	146	997	5824	-1281
310	275	900	400	394	1872	+97
355	350	700	56	252	1331	+27
452	434	534	32	265	1378	-113
465	453	557	27	249	1274	+12
480	470	555	41	281	1456	-109
506	490	610	42	277	1560	-141
530	550	540	49	299	1690	-252
555	538	662	53	303	1690	-134
580	520	570	43	301	1612	-178
605	463	537	45	249	1430	-136
634	875	925	81	519	2756	-356
650	885	1065	74	532	2834	-278
675	870	1030	68	496	2600	-136
720	635	715	50	358	2080	-322
739	910	1190	82	537	2912	-193
755	920	1230	84	546	2964	-184
807	740	925	65	430	2314	-1054

All values in mg/l as $CaCO_3$.

Table 8

IRON (II) MASS BALANCE

Time Hours	Feed gpm	x	Feed mg/l	=	Concentrate gpm	x	Concentrate mg/l	+	Permeate gpm	x	Permeate mg/l	Mass in (gpm)(mg/l)	Mass out (gpm)(mg/l)	% Error
30	8.3		113		1.9		540		6.40		3.4	937.9	1047.8	-11.73
124	7.87		113		2.7		350		5.17		2.7	889.3	959.0	-7.84
165	7.10		112		2.5		330		4.60		2.65	795.2	837.2	-5.28
225	7.20		118		4.4		205		2.8		2.6	849.6	909.3	-7.03
256	6.40		143		4.2		223		2.2		4.0	915.2	945.4	-3.03
310	6.35		145		4.15		220		2.2		4.4	940.8	922.7	-0.21
355	7.00		105		4.80		141		2.2		3.8	735.0	685.2	+6.78
390	6.35		114		5.40		133		0.95		.75	723.9	718.9	+0.69
410	6.55		114		5.55		134		1.00		6.2	746.7	739.9	-0.43
436	6.26		109		4.93		135		1.33		8.5	682.3	676.9	+0.79
452	7.16		115		4.75		148		1.41		9.0	823.4	715.7	+13.08
465	6.32		120		4.85		139		1.47		9.5	758.4	688.1	+9.27
480	6.17		120		4.50		157		1.67		10.5	740.4	724.0	+2.22
506	6.52		119		4.25		155		2.27		11.5	775.9	684.9	+11.73
530	6.55		114		4.10		167		2.45		11.75	746.7	713.5	+4.45
555	6.50		115		4.10		169		2.40		11.75	747.5	721.1	+3.53
580	6.45		118		4.10		168		2.35		10.8	761.1	714.2	+6.16
605	6.54		114		4.40		139		2.14		6.65	745.6	625.8	+16.07
634	7.42		118		2.70		290		4.72		9.5	875.6	827.8	+5.46
650	7.45		119		2.80		297		4.65		8.5	886.6	871.1	+1.75
675	7.35		120		2.90		277		4.65		8.4	882.0	840.7	+4.68
720	7.70		113		4.30		200		3.40		8.0	870.1	887.2	-1.97
735	7.50		116		2.45		300		5.05		9.4	870.0	782.5	+10.06
755	7.30		117		2.40		305		4.9		8.1	854.1	771.7	+9.65
807	6.80		120		2.8		240		4.0		8.4	816.0	705.6	+13.53

Table 9

MAGNESIUM MASS BALANCE (as $CaCO_3$)

Time Hours	Feed gpm	x	Feed mg/l	=	Concentrate gpm	x	Concentrate mg/l	+	Permeate gpm	x	Permeate mg/l	Mass in (gpm)(mg/l)	Mass out (gpm)(mg/l)	% Error
30	8.3		425		1.9		1800		6.4		15	3528	3516	+0.33
124	7.87		425		2.7		1300		5.17		10	3345	3562	-6.49
165	7.10		440		2.5		1200		4.6		12	3124	3055	+2.20
256	6.40		605		4.2		950		2.2		20	3872	4034	-4.18
310	6.35		520		4.15		900		2.2		20	3302	3779	-14.45
355	7.0		500		4.8		700		2.2		17	3500	3397	+2.94
390	6.35		430		5.4		538		0.95		7	2731	2912	-6.63
410	6.55		430		5.55		530		1.00		20	2817	2962	-5.15
452	7.16		420		4.75		534		1.41		35	3007	2586	+14.00
465	6.32		417		4.85		557		1.47		35	2635	2753	-4.48
480	6.17		395		4.50		555		1.67		40	2437	2564	-5.21
506	6.52		416		4.25		610		2.27		44	2712	2692	+0.74
530	6.55		418		4.10		540		2.45		45	2738	2324	+15.12
555	6.50		420		4.10		662		2.40		42	2730	2815	-3.11
580	6.45		419		4.10		570		2.35		38	2703	2426	+10.25
605	6.54		409		4.40		537		2.14		33	2675	2433	+9.05
634	7.42		425		2.70		925		4.72		36	3154	2667	+15.44
650	7.45		420		2.80		1065		4.65		33	3129	3135	-0.19
675	7.35		444		2.90		1030		4.45		32	3263	3129	+4.11
720	7.70		450		4.30		715		3.40		32	3465	3183	+8.14
739	7.50		455		2.45		1190		5.05		32	3413	3077	+9.84
755	7.30		460		2.40		1230		4.90		32	3358	3109	+7.42
807	6.80		455		2.80		925		4.00		30	3094	2710	+12.41

Table 10

CALCIUM MASS BALANCE (as $CaCO_3$)

Time Hours	Feed gpm	x mg/l	= Concentrate gpm	x mg/l	Permeate gpm	x mg/l	Mass in (gpm) (mg/l)	Mass out (gpm) (mg/l)	% Error
30	8.30	350	1.9	1600	6.40	10	2905.0	3104.0	-6.85
124	7.87	350	2.7	1000	5.17	10	2754.5	2751.7	+0.12
165	7.10	340	2.5	950	4.60	8	2414.0	2411.8	+0.09
256	6.40	175	4.2	400	2.2	0	1120.0	1260.0	12.50
310	6.35	180	4.15	275	2.2	0	1143.0	1141.3	+0.15
355	7.00	250	4.80	350	2.2	5	1750.0	1691.0	+3.37
390	6.35	350	5.40	406	0.95	6	2222.5	2198.1	+1.12
410	6.55	350	5.55	405	1.00	25	2292.5	2272.8	+0.88
452	7.16	360	4.75	434	1.41	35	2577.6	2110.9	+18.12
465	6.32	358	4.85	453	1.47	36	2262.6	2250.0	+0.57
480	6.17	360	4.50	470	1.67	39	2221.2	2180.1	+1.84
506	6.52	360	4.25	490	2.27	40	2347.2	2173.3	+7.40
530	6.55	358	4.10	550	2.45	45	2344.9	2365.3	-0.87
555	6.50	360	4.10	538	2.40	43	2340.0	2309.0	+1.32
580	6.45	357	4.10	520	2.35	40	2302.7	2226.0	+3.34
605	6.54	356	4.40	463	2.14	47	2328.2	2137.8	+8.85
634	7.42	355	2.70	875	4.72	33	2634.1	2518.3	+4.39
650	7.45	360	2.80	885	4.65	31	2682.0	2622.2	+2.23
675	7.35	356	2.40	870	4.45	34	2616.6	2674.3	-2.19
720	7.70	370	4.30	635	3.40	32	2849.0	2839.3	+0.34
739	7.50	365	2.45	910	5.05	38	2737.5	2421.4	+11.56
755	7.30	360	2.40	920	4.90	33	2628.0	2369.7	+9.83
807	6.8	365	2.8	740	4.0	33	2482.0	2204.0	+11.20

Table 11

SULFATE MASS BALANCE

Time Hours	Feed gpm	Feed mg/l	=	Concentrate gpm	Concentrate mg/l	+	Permeate gpm	Permeate mg/l	Mass in (gpm)(mg/l)	Mass out (gpm)(mg/l)	% Error
30	8.3	1150		1.9	5600		6.40	40	9545	10896	-14.15
124	7.87	1160		2.7	3600		5.17	29	9129	9870	-8.12
165	7.10	1150		2.5	3250		4.60	28	8165	8254	-1.09
225	7.2	1100		4.4	1700		2.8	28	7920	7558	+4.57
256	6.40	1060		4.2	1600		2.2	27	6784	6779	+0.07
310	6.35	1300		4.15	1800		2.2	48	8255	7676	+8.23
355	7.00	1000		4.8	1280		2.2	29	7000	6208	+11.31
390	6.35	1075		5.4	1100		0.95	23	6826	5962	+12.66
410	6.55	1125		5.55	1150		1.0	79	7369	6462	+12.31
436	6.26	1000		4.93	1375		1.33	40	6260	6898	-10.19
465	6.32	1100		4.85	1225		1.47	105	6952	6096	+12.31
452	7.16	1100		4.75	1325		1.41	102	7876	6438	+18.26
480	6.17	1150		4.50	1400		1.67	115	7096	6492	+8.51
506	6.52	1150		4.25	1500		2.27	118	7498	6643	+11.40
530	6.55	1075		4.1	1625		2.45	126	7041	6971	+0.99
555	6.5	1050		4.1	1625		2.4	120	6825	6951	-1.85
580	6.45	1100		4.1	1550		2.35	110	7095	6614	+6.78
605	6.54	1065		4.4	1375		2.14	75	6965	6211	+10.83
634	7.42	1075		2.7	2650		4.72	101	7977	7632	+4.32
650	7.45	1025		2.8	2725		4.65	90	7636	8049	-5.41
675	7.35	1075		2.9	2500		4.45	88	7901	7642	+3.28
720	7.7	1050		4.3	2000		3.4	85	8085	8889	-9.94
739	7.5	1075		2.45	2800		5.05	96	8063	7345	+8.90
755	7.3	1075		2.4	2850		4.9	92	7848	7291	+7.10
807	6.8	1325		2.8	2225		4.0	84	9010	6566	+27.13

Table 12

MANGANESE MASS BALANCE

Total Hours	Feed gpm	x	Feed mg/l	=	Concentrate gpm	x	Concentrate mg/l	+	Permeate gpm	x	Permeate mg/l	Mass in (gpm)(mg/l)	Mass out (gpm)(mg/l)	% Error
30	8.3		16.0		1.9		80		6.4		0.50	132.8	155.2	-16.87
355	7.00		19.0		4.80		31		2.2		0.3	133.0	149.5	-12.41
452	7.16		17.4		4.75		17.4		1.41		1.7	124.6	85.0	+31.78
465	4.32		13.4		4.85		15.0		1.47		1.25	84.7	74.6	+11.92
480	6.17		14.5		4.50		22.5		1.67		1.80	89.5	104.3	-16.54
506	6.52		15.0		4.25		23.0		2.27		1.75	97.8	101.7	-3.99
530	6.55		17.5		4.10		27.0		2.45		2.00	114.6	115.6	-0.87
555	6.50		14.0		4.10		29.0		2.40		2.15	123.5	124.1	-0.49
580	6.45		15.8		4.10		23.8		2.35		1.75	101.9	101.7	+0.20
605	6.54		15.2		4.40		24.5		2.14		1.10	99.4	110.2	-10.87
634	7.42		11.2		2.7		44.5		4.72		1.25	83.1	126.1	-51.74
650	7.45		15.2		2.8		40.5		4.65		1.50	113.2	120.4	-6.36
675	7.35		15.3		2.9		37.3		4.45		1.40	112.5	114.4	-1.69
720	7.7		18.8		4.3		27.5		3.4		1.50	144.8	123.4	+14.78
739	7.5		18.0		2.45		45.2		5.05		1.42	135.0	117.9	+12.67
755	7.3		17.7		2.4		46.4		4.9		1.40	129.2	118.2	+8.51
807	6.8		17.5		2.8		35.5		4.0		1.50	119	105.4	+11.43

☆ U. S. GOVERNMENT PRINTING OFFICE : 1970 O - 387-882

BIBLIOGRAPHIC:

Technical Center, Rex Chainbelt, Incorporated, Treatment of Acid Mine Drainage by Reverse Osmosis, FWQA Publication No. 14010DYK 03/70, March 1970

ACCESSION NO.

ABSTRACT

The objective of the study was to determine the feasibility of utilizing reverse osmosis to treat acid mine drainage, and produce a water which could be used by industry or as a municipal water supply.

A 10,000 gpd demonstration unit was

KEY WORDS:

Reverse Osmosis

Acid Mine Drainage

Demineralization

BIBLIOGRAPHIC:

Technical Center, Rex Chainbelt, Incorporated, Treatment of Acid Mine Drainage by Reverse Osmosis, FWQA Publication No. 14010DYK 03/70, March 1970

ACCESSION NO.

ABSTRACT

The objective of the study was to determine the feasibility of utilizing reverse osmosis to treat acid mine drainage, and produce a water which could be used by industry or as a municipal water supply.

A 10,000 gpd demonstration unit was

KEY WORDS:

Reverse Osmosis

Acid Mine Drainage

Demineralization

BIBLIOGRAPHIC:

Technical Center, Rex Chainbelt, Incorporated, Treatment of Acid Mine Drainage by Reverse Osmosis, FWQA Publication No. 14010DYK 03/70, March 1970

ACCESSION NO.

ABSTRACT

The objective of the study was to determine the feasibility of utilizing reverse osmosis to treat acid mine drainage, and produce a water which could be used by industry or as a municipal water supply.

A 10,000 gpd demonstration unit was

KEY WORDS:

Reverse Osmosis

Acid Mine Drainage

Demineralization

constructed and tested for 35 days on acid mine drainage near Shickshinny, Pennsylvania. The results obtained indicated that the reverse osmosis process has potential application. There are, however, operational problems which must be solved prior to utilizing reverse osmosis on a large scale. These include maintenance of high permeation rates through the membrane by reducing membrane fouling and determination of the optimum flow sheet for an acid mine treatment system utilizing reverse osmosis.

constructed and tested for 35 days on acid mine drainage near Shickshinny, Pennsylvania. The results obtained indicated that the reverse osmosis process has potential application. There are, however, operational problems which must be solved prior to utilizing reverse osmosis on a large scale. These include maintenance of high permeation rates through the membrane by reducing membrane fouling and determination of the optimum flow sheet for an acid mine treatment system utilizing reverse osmosis.

constructed and tested for 35 days on acid mine drainage near Shickshinny, Pennsylvania. The results obtained indicated that the reverse osmosis process has potential application. There are, however, operational problems which must be solved prior to utilizing reverse osmosis on a large scale. These include maintenance of high permeation rates through the membrane by reducing membrane fouling and determination of the optimum flow sheet for an acid mine treatment system utilizing reverse osmosis.

As the Nation's principal conservation agency, the Department of the Interior has basic responsibilities for water, fish, wildlife, mineral, land, park, and recreational resources. Indian and Territorial affairs are other major concerns of America's "Department of Natural Resources."

The Department works to assure the wisest choice in managing all our resources so each will make its full contribution to a better United States—now and in the future.

14010 DYK 03/70