United States
Environmental Protection
Agency

Environmental Monitoring
Systems Laboratory
P.O. Box 93478
Las Vegas NV 89193-3478

EPA 600/R-94/031
March 1994

Research and Development

Application of Microwave Energy to the Extraction of Organic Compounds from Solid Samples

0174qad94.cov

APPLICATION OF MICROWAVE ENERGY TO THE EXTRACTION OF ORGANIC COMPOUNDS FROM SOLID SAMPLES

By

Viorica Lopez-Avila* and Richard Young
Midwest Research Institute
California Operations
625-B Clyde Avenue
Mountain View, California 94043
USA

Contract Number 68-C1-0029

Project Officer: Werner F. Beckert
Quality Assurance and Methods Development Division
Environmental Monitoring Systems Laboratory
Las Vegas, Nevada 89119

ENVIRONMENTAL MONITORING SYSTEMS LABORATORY
OFFICE OF RESEARCH AND DEVELOPMENT
U.S. ENVIRONMENTAL PROTECTION AGENCY
LAS VEGAS, NEVADA 89119

NOTICE

The U.S. Environmental Protection Agency (EPA), through its Office of Research and Development (ORD), partially funded and managed the extramural research described here. It has been peer reviewed by the Agency and approved as an EPA publication.

PREFACE

This is the final report for research performed under Work Assignment 3-18, EPA Contract 68-C1-0029, conducted by the Midwest Research Institute, California Operations (MRI-CO). The MRI-CO project was directed by Dr. Viorica Lopez-Avila.

This report was written by Dr. Lopez-Avila. Technical support for the project was provided by Richard Young. Nikhil Shah and Robert Kim were involved with some early experiments under this work assignment.

The authors would like to thank the CEM Corporation (Matthews, NC) for the loan of the microwave unit used in this study and Bob Revesz from CEM Corporation for helpful technical discussions. The authors also acknowledge Steven Hawthorne of the Energy & Mineral Research Center of the University of North Dakota (Grand Forks, ND) for reviewing this report and for providing helpful comments.

ABSTRACT

As part of an ongoing evaluation of novel sample-preparation techniques by the U.S. Environmental Protection Agency (EPA), especially techniques that minimize generation of waste solvents, we evaluated microwave-assisted extraction (MAE) of organic compounds from solid materials (or "matrices"). Six certified reference materials containing polynuclear aromatic hydrocarbons (PAHs) and some base/neutral/acidic compounds, all of which are pollutants of interest to the EPA, were subjected to MAE in a closed-vessel microwave system with hexane-acetone (1:1) at different temperatures (80°C, 115°C, or 145°C) and for different periods of time (5, 10, or 20 min). For comparison, the same samples were subjected to room-temperature extraction by allowing the same solvent mixture to stay in contact with the solid matrix the same amount of time as the microwave-extracted sample (including any cooling time). Two matrices were also heated in a convection oven at 115°C, for different periods of time, with the same solvent and in the same vessel as the microwave-extracted samples. Whereas the average recovery at room temperature was about 54 percent, the MAE recoveries for 17 PAHs (three of which were deuterated PAHs that were spiked into the matrices) from the six matrices were 72 percent at 80°C, 78 percent at 115°C, and 77 percent at 145°C. The recoveries for the oven-heated samples were similar to those obtained by MAE. MAE was, however, exclusively used in this study because of its easy controllability and convenience. Although the average recoveries by MAE increased slightly with extraction time, the increase was not statistically significant. The performance of the MAE technique varied with the matrix and the analytes. Eleven PAHs had average recoveries in the 65- to 111-percent range, and three compounds [benzo(a)pyrene, benzo(ghi)perylene, and fluorene] had recoveries of 51 percent, 64 percent, and 62 percent, respectively. The spiked-compound recoveries by MAE were 77 percent for anthracene-d_{10}, 104 percent for benzo(a)anthracene-d_{12}, and 84 percent for fluoranthene-d_{10}. Additional experiments with 14 phenols and 20 organochlorine pesticides indicated that MAE is a viable alternative to the conventional Soxhlet/Soxtec and sonication extraction techniques. MAE requires smaller amounts of organic solvents, and sample throughput is increased by shorter extraction times (10 min) and because simultaneous extraction of up to 12 samples is possible.

CONTENTS

Notice ii
Preface iii
Abstract iv
Tables vi
Figures viii

1. Introduction 1
2. Conclusions 2
3. Recommendations 3
4. Experimental 4
5. Results and Discussion 16

References 43
Appendices

A. Percent-recovery results of the GC/MS analyses for the six certified reference materials 44

TABLES

Number		Page
1	Compounds investigated in this study	5
2	Certified values and concentrations measured in this study by sonication-GC/MS and Soxtec-GC/MS for compounds known to be present in the HS-3, HS-4, and HS-5 marine sediments	7
3	Certified values and concentrations measured in this study by sonication-GC/MS for compounds known to be present in the SRM1941 marine sediment	8
4	Certified values and concentrations measured in this study by Soxtec-GC/MS for compounds known to be present in the SRS103-100 soil	9
5	Time required to reach the maximum temperature under various extraction conditions	17
6	Recoveries of pesticides from freshly spiked sand using MAE and room-temperature extraction with hexane-acetone (1:1)	18
7	Average recoveries and percent RSDs for dry and wet SRS103-100 soil	26
8	Percent recoveries of "native" and spiked compounds from ERA soil Lot No. 321 with hexane-acetone (1:1) using room-temperature extraction and MAE at different temperatures and pressures	30
9	Average recoveries and percent RSDs for dry and wet ERA soil Lot No. 323	32
10	Average recoveries and percent RSDs for phenols after microwave heating -- solvent versus solvent/soil suspension	33
11	Average recoveries and percent RSDs for organochlorine pesticides after microwave heating -- solvent versus solvent/soil suspension	34
12	Average recoveries and percent RSDs for PAHs and selected base/neutral compounds after microwave heating -- solvent versus solvent/soil suspension	35
13	Comparison of analyte concentrations in extracts generated by sonication, Soxtec, and MAE with the certified values for the HS-3 marine sediment	37

TABLES (concluded)

Number		Page
14	Comparison of analyte concentrations in extracts generated by sonication, Soxtec, and MAE with the certified values for the HS-4 marine sediment	38
15	Comparison of analyte concentrations in extracts generated by sonication and MAE with the certified values for the HS-5 marine sediment	39
16	Comparison of analyte concentrations in extracts generated by sonication and MAE with the certified values for the SRM1941 marine sediment	40
17	Comparison of analyte concentrations in extracts generated by Soxtec and MAE with the certified values for the SRS103-100 soil	41
18	Correlation of the data obtained from MAE extracts for different matrices with the certified values and the values obtained from sonication or Soxtec extracts	42

FIGURES

Number		Page
1	Schematic diagram of the temperature/pressure control system for the MDS-2000 microwave system	11
2	View of the 12 lined digestion vessels, containment vessel, and temperature and pressure probes	12
3	(a) Lined digestion vessel with the temperature and pressure control; (b) lined digestion vessel without the temperature and pressure control	13
4	Percent recovery as a function of temperature for the 17 PAH compounds	20
5	Percent recovery as a function of time for the 17 PAH compounds	21
6	Percent recovery as a function of matrix for the 17 PAH compounds	22
7	Spiked versus native compound percent recoveries	23
8	Percent recovery as a function of compound for the 17 PAH compounds	25
9a	GC/MS chromatogram of the extract obtained by MAE of the HS-3 marine sediment with hexane-acetone (1:1)	27
9b	GC/MS chromatogram of the extract from a second extraction performed on the HS-3 marine sediment using microwave energy and fresh solvent	28
9c	GC/MS chromatogram of the sonication extract from the HS-3 marine sediment that was first extracted using microwave energy before extraction with fresh solvent using a sonic probe	29

SECTION 1

INTRODUCTION

Use of microwave energy to enhance extraction of organic compounds from solid matrices such as soil, seeds, foods, and feeds was reported by Ganzler and coworkers in two publications in 1986 and 1987 (1,2). These researchers used a conventional, household microwave oven to irradiate solvent/sample suspensions for 30 sec up to seven times each. They reported that the microwave extraction method was more efficient than Soxhlet extraction for polar compounds (1). Recently, Onuska and Terry (3) used microwave energy to extract organochlorine pesticides in open vessels from spiked sediment samples; they reported quantitative recoveries and no compound breakdown due to exposure to microwaves. Extraction of essential oils and other oils from biological materials such as plant and fish tissue by exposure to microwave energy was recently described in a patent application (4). In a U.S. patent (5), use of microwave energy for the extraction of natural products from mint, sea parsley, cedar foliage, and garlic with hexane, methylene chloride, or ethanol in open vessels in two or more stages is described. Other researchers have reported use of microwave energy to extract stabilizers from polyolefins (6).

As part of an ongoing U.S. Environmental Protection Agency (EPA) program addressing sample preparation techniques that prevent or minimize pollution and generation of waste solvents in analytical laboratories, this study, which was started in mid-1992 by the Environmental Monitoring Systems Laboratory, Las Vegas (EMSL-LV), addresses the extraction of organic compounds using a closed-vessel microwave-assisted extraction (MAE) technique. Six standard reference soils and sediments containing polynuclear aromatic hydrocarbons (PAHs) and some other base/neutral/acidic compounds of interest to the EPA were subjected to MAE in hexane-acetone (1:1) at various temperatures and for different periods of time to establish whether this technology has merit as a method to extract such pollutants from solid samples. For comparison, extractions were performed using conventional techniques (e.g., Soxhlet/Soxtec and sonication extraction), room-temperature extraction (as defined later), and simple heating with solvent in a closed container using a convection oven. The results indicated that MAE could be a viable alternative to the conventional Soxhlet and sonication methods. This technique uses smaller amounts of organic solvents, and sample throughput is increased because shorter extraction times (10 min) are required, and simultaneous extraction of up to 12 samples is possible (in this study, up to six samples were extracted simultaneously).

SECTION 2

CONCLUSIONS

A MAE technique for extracting organic compounds from soils and sediments was developed and evaluated with representative matrices and compounds of environmental significance (PAHs, selected base/neutral compounds, phenols, and organochlorine pesticides). All extractions were performed with hexane-acetone (1:1) in a closed-vessel microwave system that is commercially available. Our results indicated that recoveries of 17 PAHs (three of which were deuterated spikes) from six matrices averaged 72 percent at 80°C, 78 percent at 115°C, and 77 percent at 145°C. The average recoveries increased slightly with extraction time, and a 10-min extraction at 115°C is recommended for these types of compounds and matrices when hexane-acetone (1:1) is used as the extraction solvent.

Other solvent mixtures that appeared to work well include methylene chloride-acetone (1:1) and toluene-methanol (1:10). Methylene chloride alone and toluene-methanol (10:1) take 10 to 14 min for 30 mL solvent to heat to maximum temperature in the microwave system.

A 5- to 10-g soil or sediment sample and 30 mL solvent seem to work well when a 110-mL closed extraction vessel is used since the mixture reaches the maximum operating temperature of 151° to 157°C (at 100 percent power) in about 2 min, regardless of matrix.

From all compounds investigated in this study (17 PAHs, 13 base/neutral compounds, 14 phenols, and 20 organochlorine pesticides), only two compounds (2,4-dinitrophenol and 2-methyl-4,6-dinitrophenol) exhibited low recoveries when soil/solvent suspensions were heated for 10 min at 115°C. We concluded that catalytic reactions in the presence of soil or strong adsorption of the compounds on soil may have been the cause of low recoveries. Since the temperatures used during MAE are typically close to and above 100°C, very temperature-sensitive compounds may partially decompose. Stability of the target analytes under MAE conditions must therefore be demonstrated.

MAE of organic compounds from soil and sediment samples seems to be a viable alternative to the conventional Soxhlet and sonication extraction techniques since MAE recoveries are in general equal to or better than those achieved with conventional extraction techniques. The main advantages of MAE over the conventional Soxhlet and sonication methods or the simple heating of sample/solvent suspensions in a closed container are the ease with which uniform conditions can be maintained in the microwave system (temperature and pressure are being continously monitored), the reduced extraction time (typical sample preparation time for this technique is 10 min for extraction and 40 min for extract cooling, centrifugation, and extract concentration), and reduced solvent use (30 mL in the MAE versus 300 mL in the Soxhlet extraction). Up to 12 samples can be extracted simultaneously in a few minutes, resulting in increased sample throughput compared to Soxhlet and sonication extraction.

SECTION 3

RECOMMENDATIONS

The data presented in this report were obtained in a single-laboratory study and with a few relevant solid materials. MAE should now be evaluated with additional matrices and target analytes and then subjected to an interlaboratory performance study.

MAE of other classes of compounds, including organophosphorus pesticides, chlorophenoxy acid herbicides, and carbamate pesticides, should be investigated. It may be possible to extract the compounds with a buffer solution (e.g., 0.2 M KCl/0.2 M KOH buffer at pH 12 for the chlorophenoxy acid herbicides) thus eliminating or further minimizing the use of organic solvents in the extraction process.

Future studies should also address the effect of moisture upon compound recovery.

SECTION 4

EXPERIMENTAL

Standards

Analytical reference standards of 14 non-labeled PAHs (concentration: 2 mg/mL per compound; solvent: methylene chloride-benzene, 50:50), 14 phenols (concentration: 1 mg/mL per compound; solvent: acetonitrile), and 20 organochlorine pesticides (concentration: 2 mg/mL per compound; solvent: toluene-hexane, 50:50) (Table 1) were purchased as composite solutions from Supelco, Inc. (Bellefonte, PA). The three deuterated PAHs were purchased as neat materials from Cambridge Isotope Laboratory (Woburn, MA). The base/neutral compounds in Table 1 (except dibenzofuran, which was bought from Supelco as neat material) were purchased as individual stock solutions from ChemService (West Chester, PA) and Supelco, Inc., and were combined with the PAH stock solution to make the working calibration standards for the GC/MS analysis. Dibenzofuran was dissolved separately in methanol at 5 mg/mL and was combined with the PAH stock solution to make the working calibration standards. The purities of all compounds were stated to be greater than 96 percent. The spiking solution and the working calibration standards were prepared by serial dilution of the composite stock solution containing either the phenols, organochlorine pesticides, PAHs, or base/neutral compounds; for the analysis of the ERA soil samples (defined below), the calibration standards contained the PAHs, the base/neutral compounds, and selected phenols.

Standard Reference Materials

Six standard reference marine sediments and soils were used in this study. The HS-3, HS-4, and HS-5 marine sediments, collected from three harbors in Nova Scotia, were purchased from the National Research Council of Canada, Atlantic Research Laboratory (Halifax, Nova Scotia). According to the certificate of analysis, these materials had been freeze-dried, sieved to pass a 125-μm sieve, homogenized in a cement mixer, and then subsampled into 200-g portions. The certified values for the 16 compounds found in these samples are shown in Table 2, together with the values we obtained in our study after extracting 10-g portions of these materials with hexane-acetone (1:1) in a Soxtec extractor or 5-g portions with methylene chloride-acetone (9:1) using a sonic probe. The SRS1941 marine sediment, purchased from NIST (Gaithersburg, MD), is a sediment collected from the Chesapeake Bay at the mouth of the Baltimore Harbor. According to NIST, this sediment was air-dried, pulverized, sieved (< 150 μm), homogenized, and subsampled into 70-g portions. The bottled samples were sterilized by ^{60}Co radiation. Table 3 identifies the compounds certified by NIST in this sample and the values that we obtained by extracting a 5-g portion of this material with methylene chloride-acetone (9:1) using a sonic probe. Additional information about this sediment is reported on the NIST Certificate of Analysis. The SRS103-100 standard reference material is a soil contaminated with PAHs (natural material) and was purchased from Fisher Scientific (Fair Lawn, NJ); the material was prepared by RT Corporation in Laramie, WY. The certified values and the values

TABLE 1. COMPOUNDS INVESTIGATED IN THIS STUDY

Compound no.	Compound name
PAHs	
1	Acenaphthene
2	Acenaphthylene
3	Anthracene
4	Anthracene-d_{10}
5	Benzo(a)anthracene
6	Benzo(a)anthracene-d_{12}
7	Benzo(a)pyrene
8	Benzo(b+k)fluoranthene
9	Benzo(ghi)perylene
10	Chrysene
11	Fluoranthene-d_{10}
12	Fluorene
13	Fluoranthene
14	Indeno(1,2,3-cd)pyrene
15	Naphthalene
16	Phenanthrene
17	Pyrene
Base/Neutral Compounds	
18	Dibenzofuran
19	1,2-Dichlorobenzene
20	1,3-Dichlorobenzene
21	N-Nitroso-di-n-propylamine
22	Nitrobenzene
23	1,2,4-Trichlorobenzene
24	2,4-Dinitrotoluene
25	9H-Carbazole
26	Di-n-butylphthalate
27	Bis(2-ethylhexyl)phthalate
28	Isophorone
29	4-Chlorophenyl phenyl ether
30	Butyl benzyl phthalate

(continued)

TABLE 1 (Concluded)

Compound no.	Compound name
Phenols	
31	Phenol
32	2-Chlorophenol
33	2-Methylphenol
34	3-Methylphenol
35	2-Nitrophenol
36	2,4-Dimethylphenol
37	2,4-Dichlorophenol
38	4-Chloro-3-methylphenol
39	2,4,6-Trichlorophenol
40	2,4-Dinitrophenol
41	4-Nitrophenol
42	2,3,4,5-Tetrachlorophenol
43	2-Methyl-4,6-dinitrophenol
44	Pentachlorophenol
Organochlorine pesticides	
45	alpha-BHC
46	beta-BHC
47	gamma-BHC
48	delta-BHC
49	Heptachlor
50	Aldrin
51	Heptachlor epoxide
52	gamma-Chlordane
53	Endosulfan-I
54	alpha-Chlordane
55	Dieldrin
56	4,4'-DDE
57	Endrin
58	Endosulfan-II
59	4,4'-DDD
60	Endrin aldehyde
61	Endosulfan sulfate
62	4,4'-DDT
63	Endrin ketone
64	Methoxychlor

TABLE 2. CERTIFIED VALUES AND CONCENTRATIONS MEASURED IN THIS STUDY BY SONICATION-GC/MS AND SOXTEC-GC/MS FOR COMPOUNDS KNOWN TO BE PRESENT IN THE HS-3, HS-4, AND HS-5 MARINE SEDIMENTS

	HS-3			HS-4			HS-5	
Compound name	Certified value (mg/kg)[a]	Concentration measured by sonication extraction and GC/MS (mg/kg)[b]	Concentration measured by Soxtec extraction and GC/MS (mg/kg)[b]	Certified value (mg/kg)[a]	Concentration measured by sonication extraction and GC/MS (mg/kg)[b]	Concentration measured by Soxtec extraction and GC/MS[b]	Certified value (mg/kg)[a]	Concentration measured by sonication extraction and GC/MS (mg/kg)[b]
Acenaphthene	4.5 ± 1.5	1.8	5.8	0.15	c	c	0.23 ± 0.10	0.03
Acenaphthylene	0.3 ± 0.1	0.18	0.5	0.15	c	c	c	0.06
Anthracene	13.4 ± 0.4	3.5	10.1	0.14 ± 0.07	0.06	0.18	0.38 ± 0.15	0.16
Benzo(a)anthracene	14.6 ± 2.0	7.6	8.2	0.53 ± 0.05	0.32	0.38	2.9 ± 1.2	1.1
Benzo(a)pyrene	7.4 ± 3.6	2.7	3.6	0.65 ± 0.08	0.28	0.38	1.7 ± 0.8	0.58
Benzo(b)fluoranthene	7.7 ± 1.2	7.0	5.5	0.70 ± 0.15	0.59	0.5	2.0 ± 1.0	1.9
Benzo(k)fluoranthene	2.8 ± 2.0		4.9	0.36 ± 0.05		0.48	1.0 ± 0.4	
Benzo(ghi)perylene	5.0 ± 2.0	1.8	2.8	0.58 ± 0.22	0.21	c	1.3 ± 0.3	0.19
Chrysene	14.1 ± 2.0	8.8	8.1	0.65 ± 0.08	0.44	0.5	2.8 ± 0.9	1.9
Dibenzo(ah)anthracene	1.3 ± 0.5	0.74	1.2	0.12 ± 0.05	c	c	0.2 ± 0.1	0.12
Fluorene	13.6 ± 3.1	4.9	7.3	0.15	c	c	0.4 ± 0.10	0.11
Fluoranthene	60 ± 9	34.7	30.8	1.25 ± 0.10	0.75	1.1	8.4 ± 2.6	5.5
Indeno(1,2,3-cd)pyrene	5.4 ± 1.3	2.2	2.8	0.51 ± 0.15	0.24	c	1.3 ± 0.7	0.55
Naphthalene	9.0 ± 0.7	1.8	4.3	0.15	c	c	0.25 ± 0.07	0.04
Phenanthrene	85 ± 20	46.8	38.2	0.68 ± 0.08	0.34	0.58	5.2 ± 1.0	2.8
Pyrene	39 ± 9	21.6	16.8	0.94 ± 0.12	0.61	0.9	5.8 ± 1.8	3.2

[a] Value reported by the National Research Council of Canada.
[b] Single determinations.
[c] Not detected; the approximate detection limit was 0.1 mg/kg.

TABLE 3. CERTIFIED VALUES AND CONCENTRATIONS MEASURED IN THIS STUDY BY SONICATION-GC/MS FOR COMPOUNDS KNOWN TO BE PRESENT IN THE SRM1941 MARINE SEDIMENT

Compound name	Concentration (mg/kg)[a]	Concentration measured by sonication extraction and GC/MS (mg/kg)[b]
Acenaphthene[c]	0.052 ± 0.002	d
Acenaphthylene[c]	0.115 ± 0.010	0.041
Anthracene	0.202 ± 0.042	0.109
Benzo(a)anthracene	0.55 ± 0.079	d
Benzo(a)pyrene	0.67 ± 0.13	0.294
Benzo(b)fluoranthene	0.78 ± 0.19	0.835
Benzo(k)fluoranthene	0.444 ± 0.049	
Benzo(ghi)perylene	0.516 ± 0.083	0.135
Chrysene[c]	0.702 ± 0.016	d
Fluorene[c]	0.104 ± 0.005	d
Fluoranthene	1.22 ± 0.24	0.950
Indeno(1,2,3-cd)pyrene	0.569 ± 0.040	0.285
2-Methylnaphthalene[c]	0.406 ± 0.036	d
Naphthalene[c]	1.322 ± 0.014	0.147
Perylene	0.422 ± 0.033	e
Phenanthrene	0.577 ± 0.059	0.344
Pyrene	1.08 ± 0.20	0.915

[a] Value reported by NIST.
[b] Single determinations.
[c] Concentration reported for this compound is not certified by NIST.
[d] ND - not detected; detection limit is approximately 0.1 mg/kg.
[e] NA - not analyzed for perylene.

we measured after using Soxtec extraction are reported in Table 4. The ERA soils (Lot No. 321 and 323) are spiked materials and were purchased from Environmental Resource Associates (Arvada, CO). The certified values for these materials are included in Tables 8 and 9 in the Results section.

The soil used in the preliminary experiments was a sandy loam soil (0.1 percent organic matter) and was obtained from Sandoz Crop Protection (Gilroy, CA).

Solvents

All solvents used in this study were distilled-in-glass, pesticide grade. The solvent mixture chosen for the MAE was hexane-acetone (1:1). Other solvents evaluated for the MAE include tetrachloroethylene, methylene chloride-acetone (1:1), toluene-methanol (10:1), methylene chloride, and toluene-methanol (1:10). The solvent mixture used for Soxtec extraction was hexane-acetone (1:1) and that for sonication extraction was methylene chloride-acetone (9:1).

MAE Procedure

A 5-g portion of the sample was accurately weighed into an aluminum dish and was transferred quantitatively to one of the Teflon-lined extraction vessels. To prepare the wet samples, the calculated volume of water was added and allowed to equilibrate with the sample for approximately 10 min. A solution containing the three deuterated PAHs was added to each sample immediately before adding the hexane-acetone (1:1) solvent mixture (30 mL). The extraction vessel was closed, after ensuring that a new rupture membrane was installed before each extraction. Extractions were performed at 80°C, 115°C, or 145°C for 5, 10, or 20 min at 50 percent power. After extraction, the vessels were allowed to cool to room temperature (approximately 20 min without external cooling) before they were opened. The supernatant and a 2- to 3-mL hexane-acetone rinse of the Teflon extraction vessel containing the soil were combined and were filtered through precleaned glass wool. The extract was concentrated to approximately 5 mL using nitrogen blowdown evaporation, and then centrifuged twice for 10 min at 2,300 rpm to separate any fine particulates. The extract was finally either concentrated to 1 mL or diluted for GC/MS analysis.

All MAEs were performed with a 950-watt MDS-2000 Microwave Sample Preparation System (CEM Corporation, Matthews, NC) shown in Figure 1. This system was equipped with an inboard pressure and fluoroptic™ temperature control system for regulating sample extraction conditions via magnetron power output control. Temperature- and pressure-control set points could be programmed in five separate heating stages. The instrument controlled either pressure or temperature, depending on which parameter reached its control set-point first.

The MAEs were performed in 110-mL lined digestion vessels. The turntable shown in Figure 2 contained a control vessel and 11 standard vessels. The control vessel is illustrated in Figure 3a. The outer body and cap consisted of microwave-transparent Ultem® polyetherimide. The removable inner liner, the liner cover, and the safety rupture membrane were made of Teflon® PFA. Gases could escape through the exhaust port if the safety rupture membrane broke or if the vessel were hand-vented by turning the vent fitting. The liner cover of the control vessel had Teflon® PFA fittings to allow for pressure tubing connection and for insertion of a Pyrex tube that ran through the cap into the vessel and ended close to the bottom of the vessel. The Pyrex tube, which housed the

TABLE 4. CERTIFIED VALUES AND CONCENTRATIONS MEASURED IN THIS STUDY FOR COMPOUNDS KNOWN TO BE PRESENT IN THE SRS103-100 SOIL

Compound name	Certified value (mg/kg)[a]	Concentration measured by Soxtec extraction and GC/MS (mg/kg)[b]
Acenaphthene	591 ± 104	683
Acenaphthylene	16.3 ± 11.1	21.0
Anthracene	425 ± 67.5	553
Benzo(a)anthracene	249 ± 56.8	240
Benzo(a)pyrene	97.5 ± 26.6	78.0
Benzo(k+b)fluoranthene	156 ± 40.1	179
Chrysene	310 ± 62.9	272
Fluorene	475 ± 101	456
Fluoranthene	1,307 ± 396	1,041
2-Methylnaphthalene	56.7 ± 21.0	78.9
Naphthalene	23.6 ± 28.1	41.1
Phenanthrene	1,450 ± 570	1,315
Pyrene	961 ± 428	714
Dibenzofuran	306 ± 74.8	378
Pentachlorophenol	884 ± 692	1,070

[a] Value reported by Fisher Scientific.
[b] Single determinations.

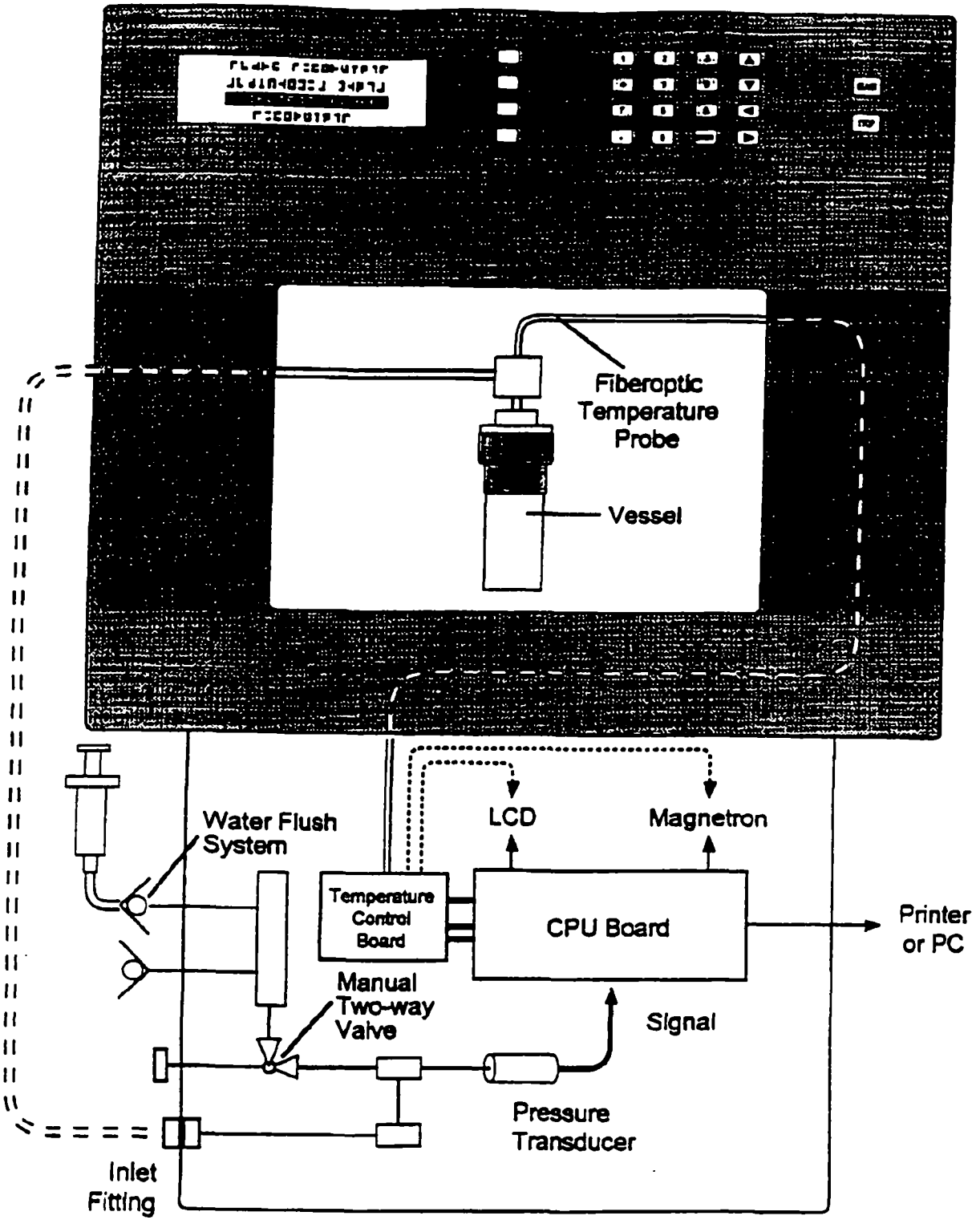

Figure 1. *Schematic diagram of the temperature/pressure control system for the MDS-2000 microwave system.*

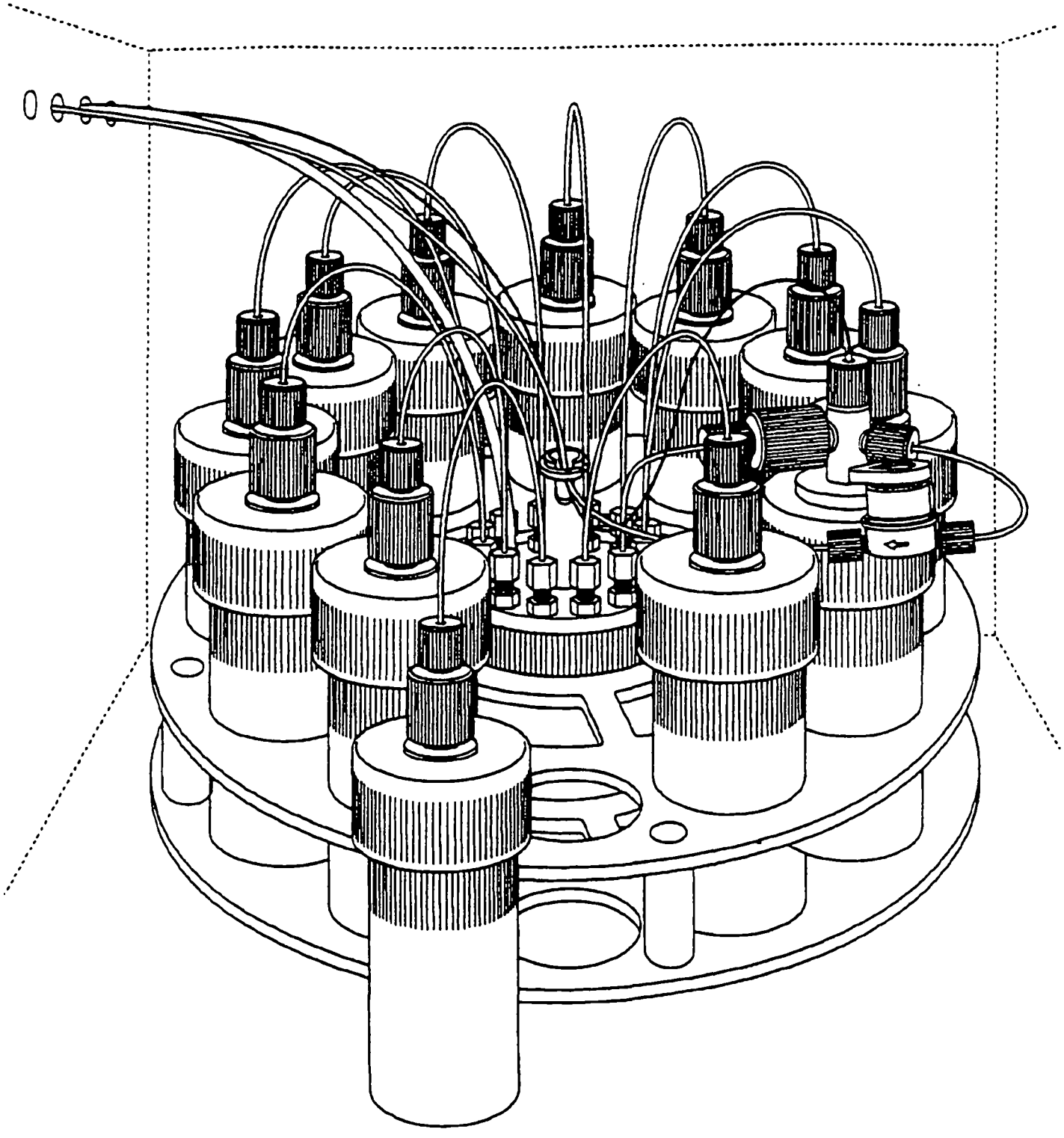

Figure 2. View of the 12 lined digestion vessels, containment vessel, and temperature and pressure probes.

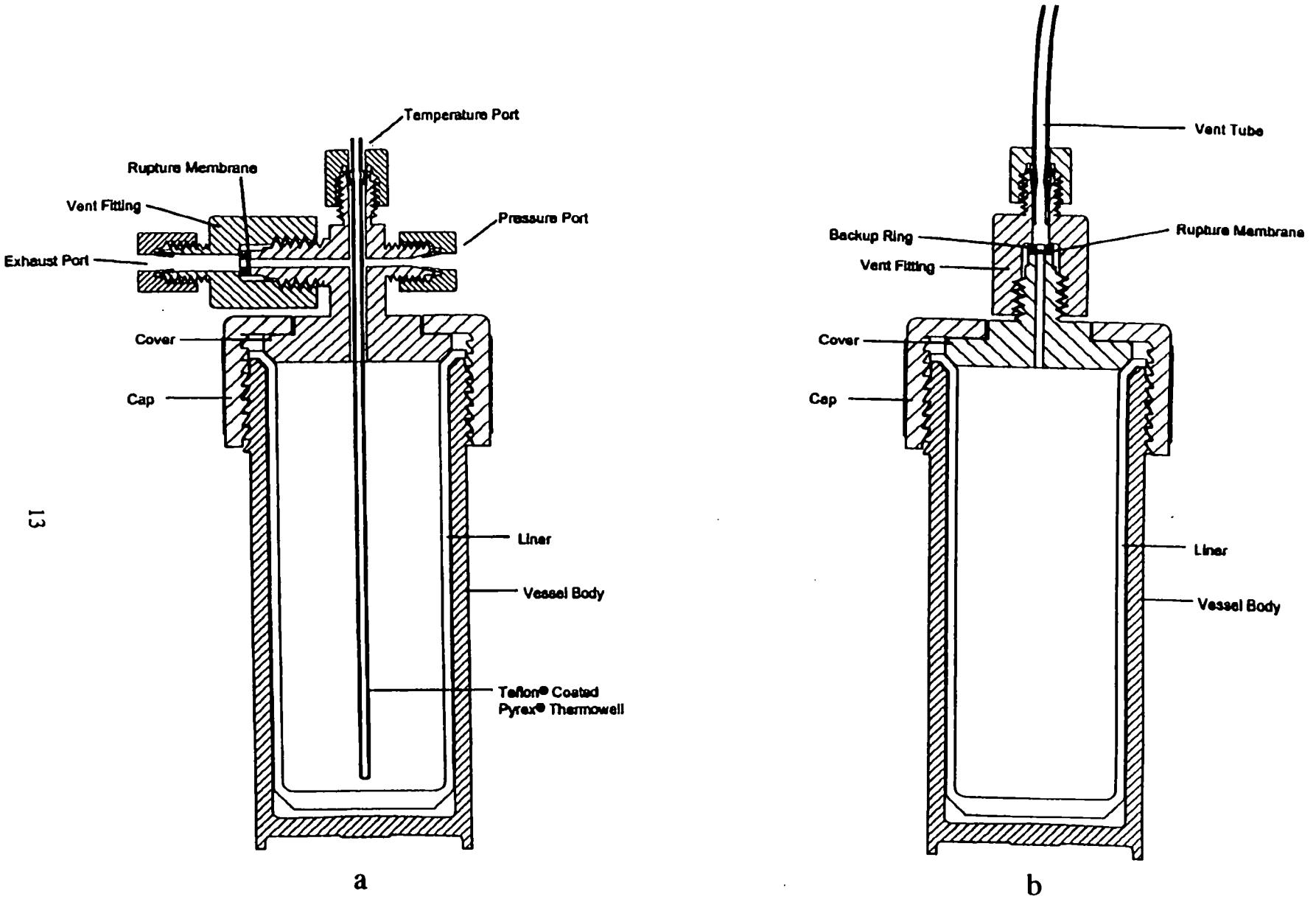

Figure 3. (a) Lined digestion vessel with the temperature and pressure control.; (b) lined digestion vessel without the temperature and pressure control.

fluoroptic™ probe, provided a seal in the cap and protected the fluoroptic™ probe from solvent attack. The standard vessels, one of which is shown in Figure 3b, did not have temperature and pressure ports but had only rupture membranes and vent stems. These vessel assemblies were rated for operation up to 175 psi and 200°C.

All vessels shown in Figure 2 were connected to a containment vessel (shown in the center of Figure 2) via 1/8-in Teflon tubes. The control vessel's temperature and pressure were monitored for control purposes. The fluoroptic™ probe extended down through the center of the turntable and was inserted into the control vessel. The 1/4-in diameter Teflon tube from the sealed containment vessel passed through the oven cavity wall to provide a safe exhaust of any solvent vapor in case the rupture membrane broke.

Other Extraction Procedures

Extractions using a Soxtec apparatus (Tecator, Silver Springs, MD) were performed by extracting 10-g portions of the reference materials with 50 mL hexane-acetone (1:1); the immersion time and the extraction time were 45 min each. The solvent was evaporated directly in the Soxtec apparatus. Details of this procedure can be found elsewhere (7, 8).

Extractions using a sonic probe (Sonifier 450, Branson Ultrasonics, Danbury, CT) were performed using 5-g portions of each reference material (except for the NIST 1941 material where 3.4 g was used). The solvent-soil suspensions were sonicated for 3 min at 50 percent power (output setting 3.5) with 20 mL methylene chloride-acetone (9:1) and then again with another 10 mL methylene chloride-acetone (9:1). The extracts were combined, the solvent was exchanged to hexane, and the hexane solution was concentrated to 1 mL. A silica gel procedure using 1.8 g silica gel (100-200 mesh, EM Science, Gibbstown, NJ), activated for 16 hrs at 130°C prior to use, was used to clean up the extracts. The first fraction that was eluted with 10 mL hexane was discarded. PAHs were then eluted from the silica gel column with 10 mL hexane-methylene chloride (60:40).

The room-temperature extractions of the reference soils and sediments were performed by allowing the solvent mixture to stay in contact with the solid matrix the same amount of time that was required for the temperature in the microwave-heated vessel (i) to reach the set point, (ii) to be maintained at the set point (5, 10, or 20 min), and (iii) then to cool to room temperature.

The extractions using a convection oven were performed as described above for MAE except that the vessels were heated in a convection oven (Baxter Scientific Products, McGaw Park, IL) for 15, 30, 60, and 120 min. Two matrices including SRS103-100 soil and the HS-5 marine sediment were used in these experiments.

Analysis of Extracts

Analyses of the extracts from the reference soil and sediment samples and from those samples containing PAHs and selected base/neutral compounds were performed on a 5890 Series II gas chromatograph interfaced to an HP 5971A mass spectrometer MSD/DOS Chemstation (Hewlett-Packard Company, Palo Alto, CA) and equipped with a 5973A autoinjector. The samples were introduced via a 30-m length x 0.25-mm ID x 0.25-μm film thickness PTE-5 fused-silica open tubular column (Supelco, Inc.) with helium carrier gas at a linear velocity of 39 cm/sec. The column temperature was held at 75°C for 3 min, then programmed to the final temperature of 300°C at

12°C/min, where it was held for 13 min. The injection volume was 2 μL, and the injector temperature was 250°C. The injector was set in the splitless mode for 1 min after the injection. The electron energy was set at 70 eV and the electron multiplier voltage was set at 2,160 V. Spectral data were acquired at a rate of 1.2 sec/scan (scanning range was 40 to 500 amu). The instrument was tuned daily with PFTBA introduced via the calibration gas valve; the ion intensity was verified using DFTPP introduced via the GC inlet. A 5-point internal standard calibration was performed initially to establish the GC/MS linear range. Six internal standards including 1,4-dichlorobenzene-d_4 (IS-1), naphthalene-d_8 (IS-2), acenaphthene-d_{10} (IS-3), phenanthrene-d_{10} (IS-4), chrysene-d_{12} (IS-5), and perylene-d_{12} (IS-6) were spiked into every extract that was analyzed by GC/MS.

Analyses of the extracts containing the 14 phenols or the 20 organochlorine pesticides were performed by gas chromatography. For phenol analysis, we used a 5890 Series II gas chromatograph equipped with a flame ionization detector and a 5973A autoinjector. Samples were introduced via a 15-m length x 0.53-mm ID x 0.88-μm film thickness HP-5 fused-silica open tubular column (Hewlett-Packard Company) with helium carrier gas at a flow rate of 7.1 mL/min. The column temperature was held at 65°C for 3 min, then programmed to 185°C (1-min hold) at 10°C/min, then to 275°C (5-min hold) at 30°C/min. The injection volume was 2 μL, and the injector temperature was 200°C.

For organochlorine pesticide analysis, we used a 5890 Series II gas chromatograph equipped with an electron capture detector and a 5973A autoinjector. Samples were introduced via a 15-m length x 0.53-mm ID x 0.88-μm film thickness HP-5 fused-silica open tubular column (Hewlett-Packard Company) with helium carrier gas at a flow rate of 7.5 mL/min. The column temperature was held at 150°C for 0.5 min, then programmed to 275°C at 5°C/min. The injection volume was 1 μL, and the injector temperature was 200°C.

Safety

The microwave unit should be operated in accordance with CEM's recommended operating safety instructions. The MDS-2100 microwave unit used in this study was modified by CEM Corporation to incorporate additional safety features: (a) a Teflon ceiling, held in place with polypropylene clips, was mounted in the cavity underneath the mode stirrer so that any sparks from the stirrer would not ignite organic vapors that might leak into the cavity; (b) an air-flow sensor was installed in the exhaust line from the microwave unit (should the sensor detect a decrease in the air flow, then the microwave energy would be shut off); (c) the maximum operating pressure was set to 150 psi; and (d) the lined digestion vessels were modified so that in case of membrane rupture, the solvent vapors would be retained in the containment vessel and would not escape into the cavity.

SECTION 5

RESULTS AND DISCUSSION

Preliminary Experiments

Pure hydrocarbon solvents (e.g., hexane) do not absorb microwave energy. Therefore, a certain percentage (> 10 percent) of a polar component (e.g., acetone) must be added. In our preliminary MAE experiments, we tried several solvents and solvent mixtures that are commonly used with conventional extraction techniques using the control vessel to establish the time required to reach the maximum temperature. Methylene chloride-acetone (1:1), hexane-acetone (1:1), and toluene-methanol (1:10) reached maximum temperature within 1 to 3 min (Table 5). We chose hexane-acetone (1:1) in subsequent experiments since this solvent mixture was compatible with electron capture detection. Next, we investigated the effect of solvent volume by varying the volume of hexane-acetone (1:1) from 5 to 30 mL. The results indicated that a 30-mL volume was desirable since the solvent could reach the maximum temperature (156-160°C) in 2.5 min (Table 5). Various solid matrices were added to the solvent, but the effect of the matrix on the heating rate appeared to be insignificant; the time required for the temperature to reach maximum was still about 2 min (Table 5).

When both the solvent volume and the mass of the sample were varied, while keeping their ratio constant, we found that a 30-mL volume and a 6-g sample were giving the shortest heating time (Table 5). When the water content of the sample was adjusted to 10 or 30 percent, the time required to reach the maximum temperature almost doubled, and the T_{max} was about 15°C lower than in the case of the dry matrix. When we performed experiments using solvent only, with 6 and 12 vessels, we found that the time required to heat the solvent in the vessels to T_{max} increased to 5 min for 6 vessels and to 9.5 min for 12 vessels (Table 5).

Sand freshly spiked with seven of the organochlorine pesticides listed in Table 1 was extracted for 5, 10, or 20 min using microwave energy; another spiked sand sample was left in contact with the solvent at room temperature (no microwave energy) for about 5 min. Recoveries (Table 6) were all above 95 percent, and we could not draw conclusions about how well the MAE technique performed because simple soaking of the sample with solvent also resulted in quantitative recoveries. The results indicated, however, that the spiked compounds did not degrade when microwave energy was applied. The recoveries ranged from 95 to 134 percent; the high values may have been due to partial evaporation of the solvent upon opening the vessel too soon after extraction. In subsequent, more carefully monitored experiments, we measured the volume of the solvent after extraction and found no changes in the solvent volume when we extracted dry matrices and allowed adequate time for cooling.

TABLE 5. TIME (MIN) REQUIRED TO REACH THE MAXIMUM TEMPERATURE UNDER VARIOUS EXTRACTION CONDITIONS

Solvent type	Solvent volume (mL)	Matrix type	Sample weight (g)	Number of vessels	Time required to reach maximum temperature (min)	T_{max} (°C)
Effect of solvent						
Tetrachloroethylene	10, 20, 30	Solvent only	0	1	a	—
Methylene chloride-acetone (1:1)	30	Solvent only	0	1	1:15	160-161
Hexane-acetone (1:1)	30	Solvent only	0	1	2:30	157-159
Toluene-methanol (10:1)	30	Solvent only	0	1	13:45	110-112
Methylene chloride	30	Solvent only	0	1	9:45	135-136
Toluene-methanol (1:10)	30	Solvent only	0	1	1:15	146-147
Effect of solvent volume						
Hexane-acetone (1:1)	5	Solvent only	0	1	17:00	146
Hexane-acetone (1:1)	10	Solvent only	0	1	7:45	147-148
Hexane-acetone (1:1)	15	Solvent only	0	1	7:30	145
Hexane-acetone (1:1)	20	Solvent only	0	1	5:00	145
Hexane-acetone (1:1)	30	Solvent only	0	1	2:30	156-160
Effect of matrix						
Hexane-acetone (1:1)	30	Sand	10	1	2:30	156-157
Hexane-acetone (1:1)	30	Sediment	5	1	2:00	154-155
Hexane-acetone (1:1)	30	Sandy loam	10	1	1:45	152-153
Hexane-acetone (1:1)	30	Clay loam	6	1	2:15	151-152
Effect of solvent volume and sample weight						
Hexane-acetone (1:1)	10	Clay loam	2	1	14:00	155
Hexane-acetone (1:1)	15	Clay loam	3	1	8:30	153
Hexane-acetone (1:1)	20	Clay loam	4	1	4:45	152
Hexane-acetone (1:1)	30	Clay loam	6	1	2:15	151
Effect of number of vessels						
Hexane-acetone (1:1)	30	Solvent only	0	1	2:30	156-160
Hexane-acetone (1:1)	30	Solvent only	0	6	5:00	156-160
Hexane-acetone (1:1)	30	Solvent only	0	12	9:30	156-160
Effect of sample moisture						
Hexane-acetone (1:1)	30	Sand (10% water)	5	1	4:30	142-143
Hexane-acetone (1:1)	30	Sand (30% water)	5	1	3:30	137-138

[a] Temperature did not exceed 70°C.

TABLE 6. RECOVERIES OF PESTICIDES FROM FRESHLY SPIKED SAND USING MAE AND ROOM-TEMPERATURE EXTRACTION WITH HEXANE-ACETONE (1:1)[a]

Compound name	MAE recoveries (percent)			Room temperature extraction recoveries (percent)
	5 min	10 min	20 min	5 min
alpha-BHC	99.2	116	108	96.6
gamma-BHC	96.8	116	107	95.0
Heptachlor	94.6	117	111	96.2
Aldrin	102	120	107	95.4
4,4'-DDE	106	130	125	103
Endosulfan II	97.0	122	116	102
4,4'-DDT	100	134	129	114

[a] Single determinations. The spike level was 600 ng/g. The sample weight was 5 g; the extraction was performed with 30 mL hexane-acetone (1:1) at 155°C and 100 percent power.

MAE of PAHs from Standard Reference Materials

Four standard reference marine sediments (HS-3, HS-4, HS-5, and NIST SRM1941) and two certified contaminated soils (SRS103-100 and ERA Lot No. 321) were subjected to MAE with hexane-acetone (1:1) for 5, 10, or 20 min after reaching the set temperature (80°C, 115°C, or 145°C). In parallel, we performed room-temperature extractions of the same materials by allowing the solvent mixture to stay in contact with the solid matrix for the same combined amounts of time that were required for the temperature in the microwave-heated vessel to reach the set point, to be maintained at the set point (5, 10, or 20 min), and then to cool to room temperature. Before extraction, three deuterated compounds were spiked onto these samples at levels comparable to those of their undeuterated counterparts. This allowed us to compare the recoveries of the "native" compounds and the spiked compounds.

The recovery data for the 17 compounds listed under PAHs in Table 1 (14 of which were native compounds and three were spikes) are summarized in Figures 4 through 8. These recoveries were determined from the values obtained from the analysis of the extracts by GC/MS in relation to the certified values provided by the manufacturers. Not all reference materials contained all 17 compounds; therefore, the summarized recovery data pertain to recovery results from four to six matrices, depending on the compound.

Figure 4 shows the average recoveries and the 95-percent confidence intervals as a function of temperature across the 17 compounds and the six matrices. The average recovery at room temperature was approximately 54 percent, which was significantly lower than the average recoveries achieved at 80°C, 115°C, and 145°C (72 percent, 78 percent, and 77 percent, respectively). Since the average recoveries at 115°C and 145°C were almost identical, subsequent experiments to determine method precision and accuracy were carried out at 115°C.

Figure 5 shows the average recoveries (for data generated for four to six matrices per compound and at three temperatures, 80°C, 115°C, and 145°C) and the 95-percent confidence intervals as a function of time. The average recovery increased slightly with extraction time, but the increase was not statistically significant. Thus, a 5-min extraction (at 115°C) was deemed sufficient for recovering 11 "native" PAHs from a soil or sediment matrix.

Figure 6 shows the average recoveries (for data generated for the 17 compounds at three temperatures and three extraction times) and the 95-percent confidence intervals as a function of matrix. These data indicate that, just as with other extraction methods, method performance was also a function of the matrix. It is difficult to establish whether the recovery was also a function of analyte concentration; the results in Figure 6 did not support this. For example, the HS-4 marine sediment matrix had the lowest PAH concentrations (ranging from 0.15 to 1.25 mg/kg), yet the average recovery across the 17 compounds was higher than for the HS-5 marine sediment where the PAH concentrations ranged from 0.2 to 8.4 mg/kg. The NIST sediment material, which had some PAHs at levels that were comparable to those in the HS-4 marine sediment, gave even higher recoveries. The ERA soil, which is not a naturally occurring soil material, but a soil that has been spiked, homogenized, and weathered, exhibited recoveries averaging 83 percent, which were approaching those measured for the spikes (Figure 7). This seems to indicate that even after weathering, the ERA spikes behaved almost like fresh spikes.

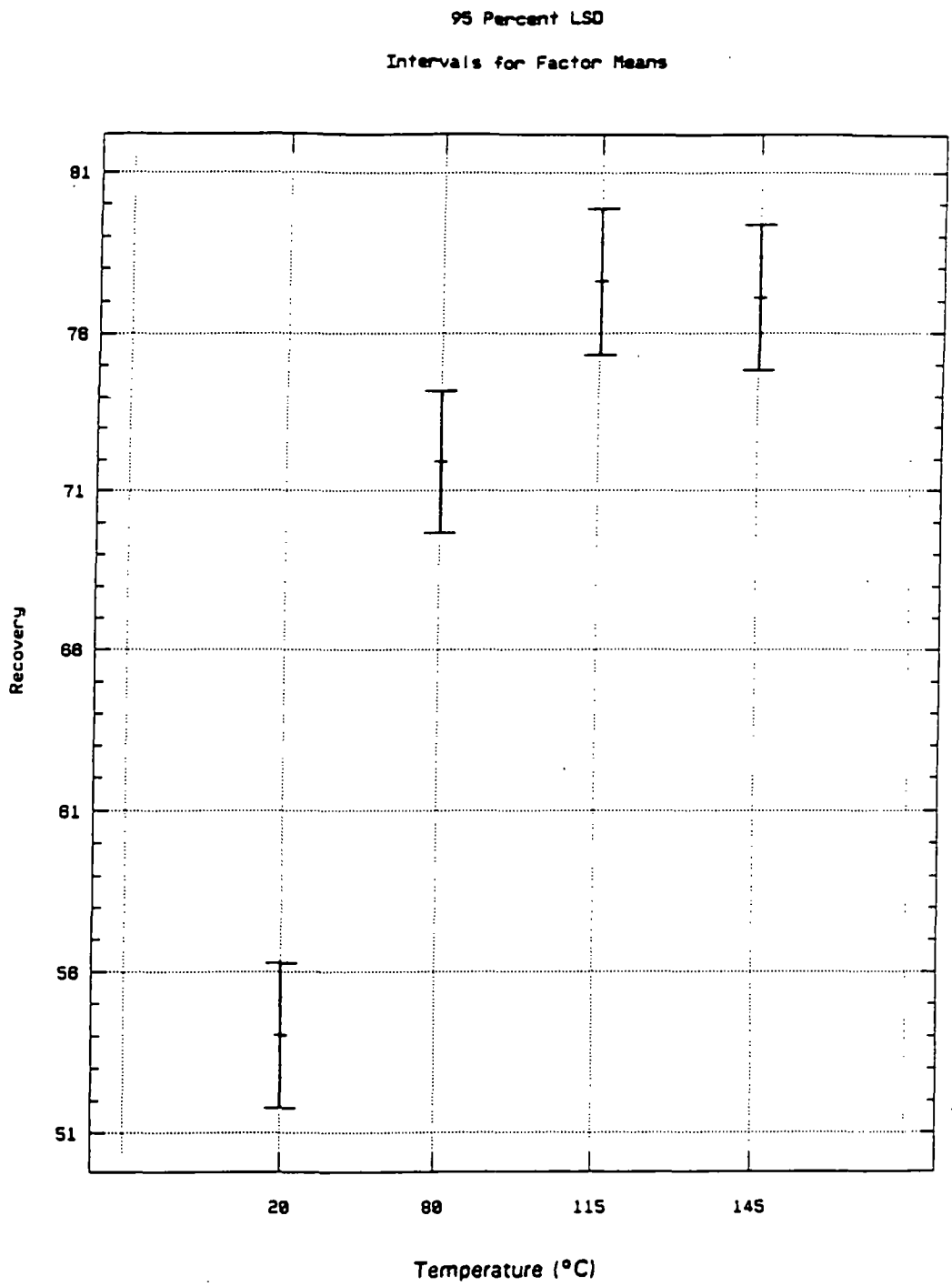

Figure 4. Percent recovery as a function of temperature for the 17 PAH compounds (four to six matrices).

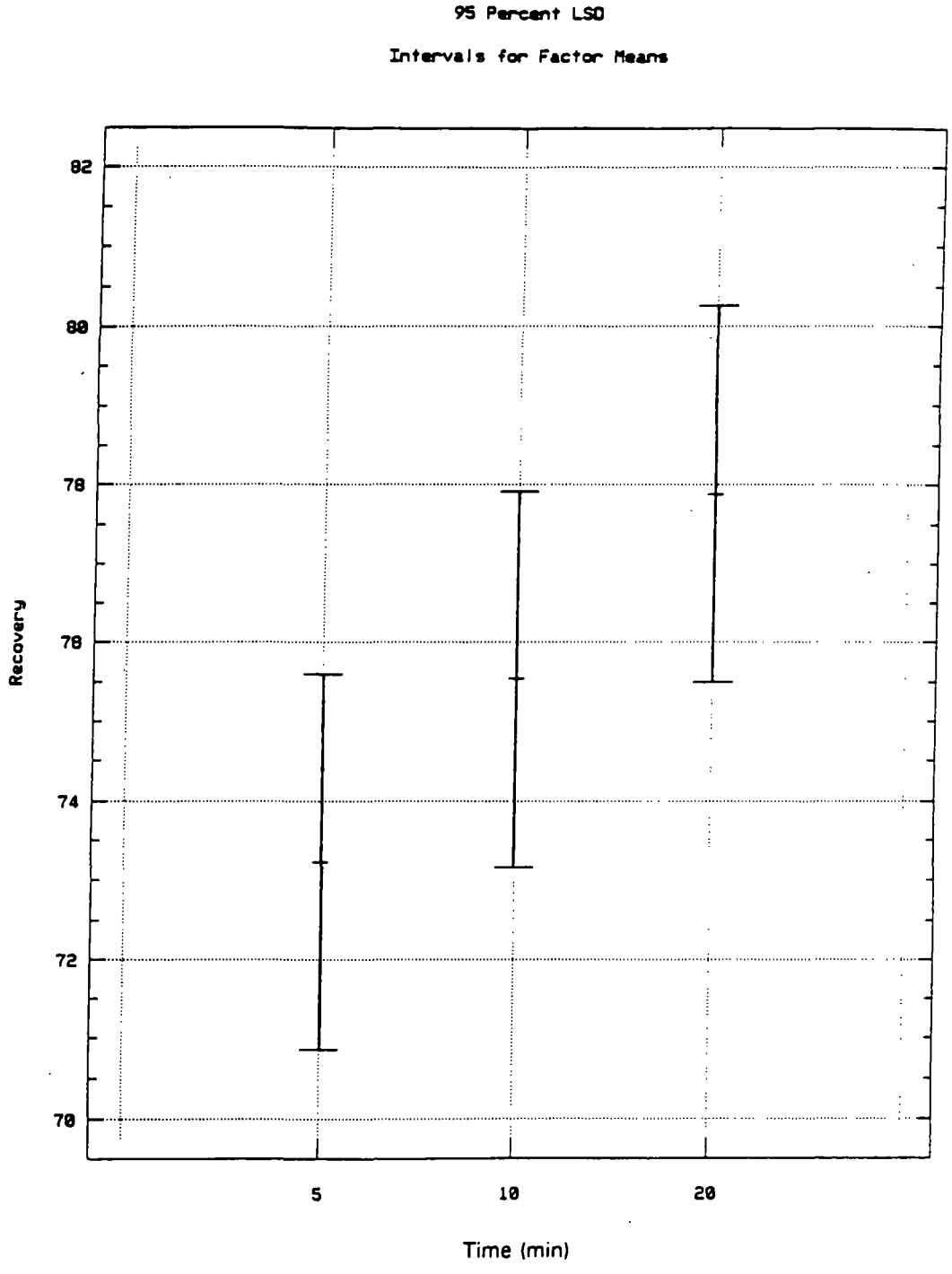

Figure 5. **Percent recovery as a function of time for the 17 PAH compounds (four to six matrices).**

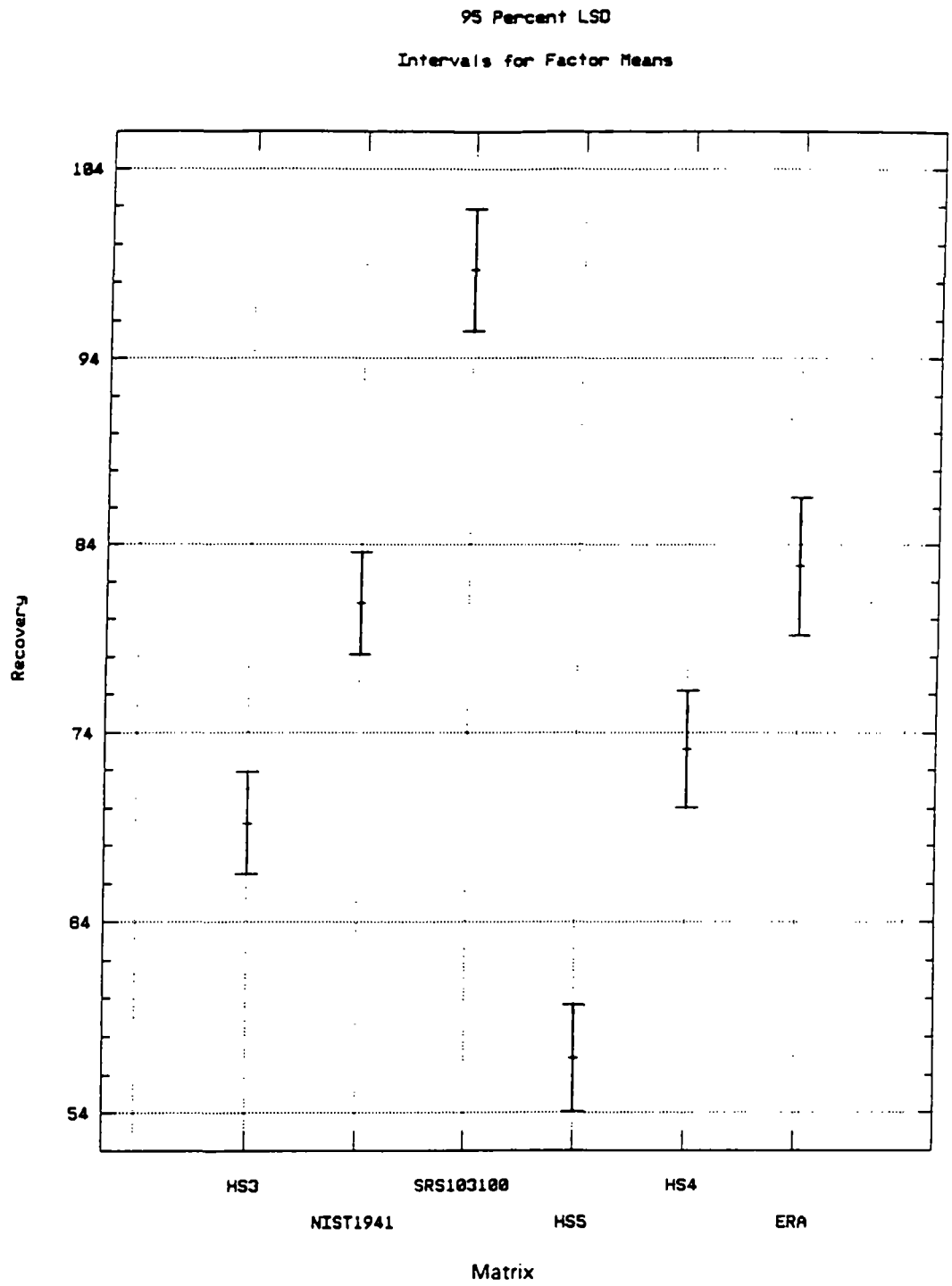

Figure 6. Percent recovery as a function of matrix for the 17 PAH compounds (four to six matrices).

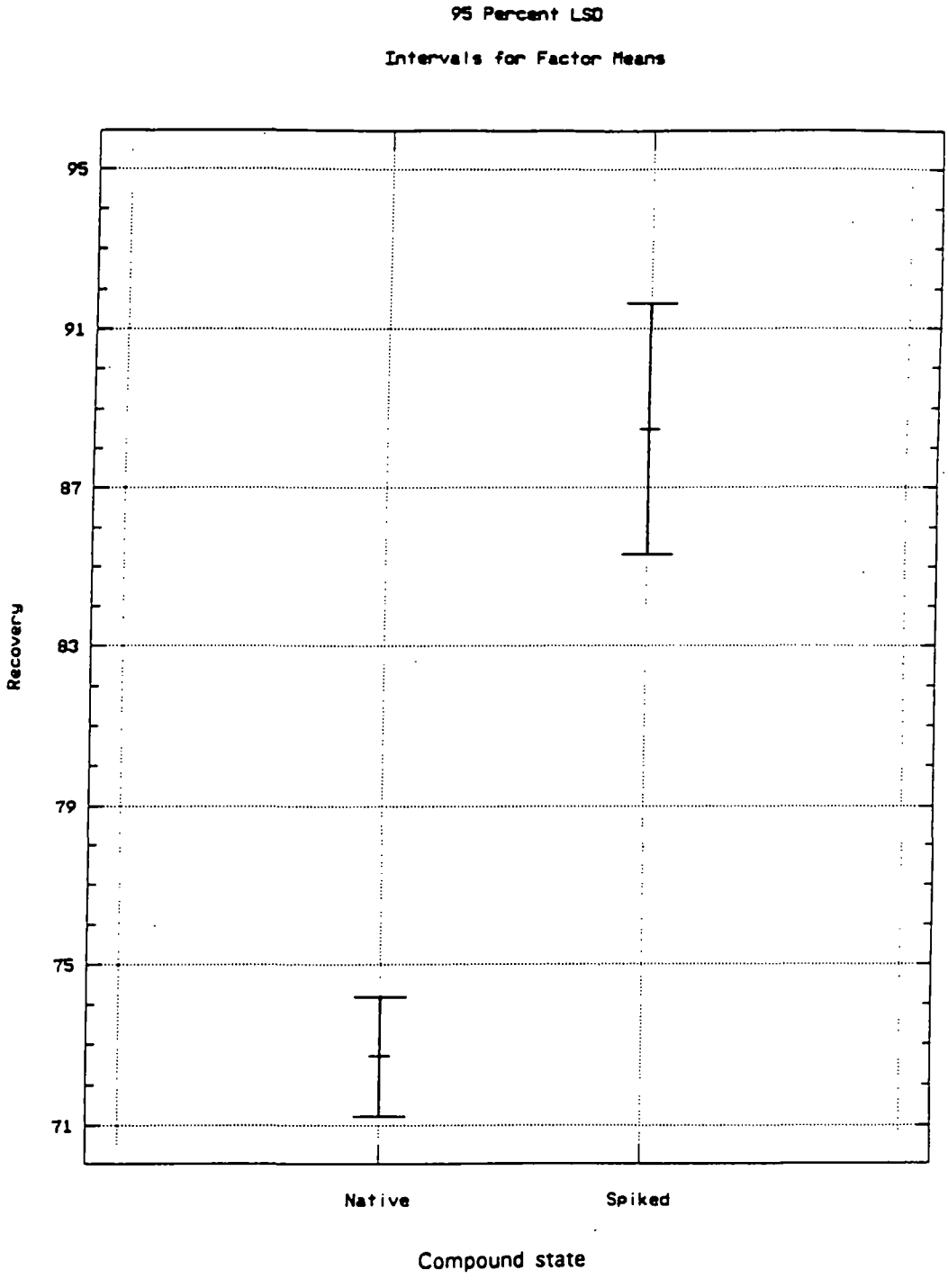

Figure 7. Spiked versus native compound percent recoveries (four to six matrices).

Figure 8 shows the average recoveries (for data generated from four to six matrices per compound at three temperatures and three extraction times) and the 95-percent confidence intervals as a function of compound. Of the native compounds, 11 gave average recoveries within 65 to 111 percent, and three compounds [benzo(a)pyrene, benzo(ghi)perylene, and fluorene] had recoveries of 51 percent, 64 percent, and 62 percent, respectively. The spiked-compound recoveries were 77 percent (compound no. 4), 104 percent (compound no. 6), and 84 percent (compound no. 11).

To determine method accuracy and precision, six 5-g portions of the SRS103-100 standard reference soil were extracted simultaneously for 10 min at 115°C. The average recoveries and percent RSDs for the 16 compounds known to be present in the sample are presented in Table 7. The repeatability of the injection technique was 1.3 percent or better (as determined from the six consecutive injections of a calibration standard at a concentration of 50 ng/μL). When one of the soil extracts was injected six times, the percent RSDs were comparable to those obtained for the calibration standard with the exception of pentachlorophenol (percent RSD 11.9). The percent RSDs calculated for the six extracts were higher, as expected; but they were under 10 percent for 14 of the 16 compounds. Naphthalene and pentachlorophenol were the two compounds for which we obtained percent RSDs in the 12 to 14 percent range. Percent recoveries established relative to the certified values were greater than 80 percent and did not appear to be affected by the presence of water in the sample. The high recoveries of naphthalene and phenanthrene that we found for the MAE may be due to a certified value that is biased low, since in both cases the standard deviation for the certified concentration is quite high (Table 4).

To verify that a 10-min MAE was sufficient to extract the compounds of interest from a soil or sediment matrix, we reextracted the material (remaining after the first extraction) with fresh solvent using the same conditions. Figures 9a and 9b show GC/MS chromatograms of the HS-3 extracts from the first and second extraction, respectively. Since we did not recover any compounds in the second extraction, we reextracted a separate portion of the material (that had already been extracted once using microwave energy) with methylene chloride-acetone (9:1) using sonication extraction. A GC/MS chromatogram of the extract obtained by sonication extraction is shown in Figure 9c. Except for three compounds (phenanthrene, fluoranthene, and pyrene) that represented less than 5 percent of their original concentrations, the extract was clean. Thus, we concluded that a 10-min MAE was sufficient for the types of matrices we investigated.

Extraction of Other Organic Compounds

The recovery data for 20 compounds of interest to the EPA that were known to be present in the ERA soil Lot No. 321 are included in Table 8. The recoveries follow the same trend as in the case of the PAHs. The recoveries obtained at room temperature were significantly lower than those achieved using microwave energy; the 5-min, 10-min, and 20-min extraction results were very similar; and there was a significant improvement in recovery when extractions were done at either 115°C or 145°C as compared with the 80°C extraction. Compounds that gave recoveries above 80 percent at 115°C/10 min included naphthalene, dibenzofuran, N-nitroso-di-n-propylamine, nitrobenzene, 2,4-dichlorophenol, 2,4,6-trichlorophenol, fluoranthene, chrysene, 2,4-dinitrotoluene, carbazole, and di-n-butylphthalate. Pentachlorophenol gave a recovery of 67 percent and bis(2-ethylhexyl)phthalate a recovery of 79 percent. 1,2,4-Trichlorobenzene recovery was only 56 percent, and the more volatile compounds such as 1,2-dichlorobenzene and 2-methylphenol gave low recoveries, even when extracted at room temperature.

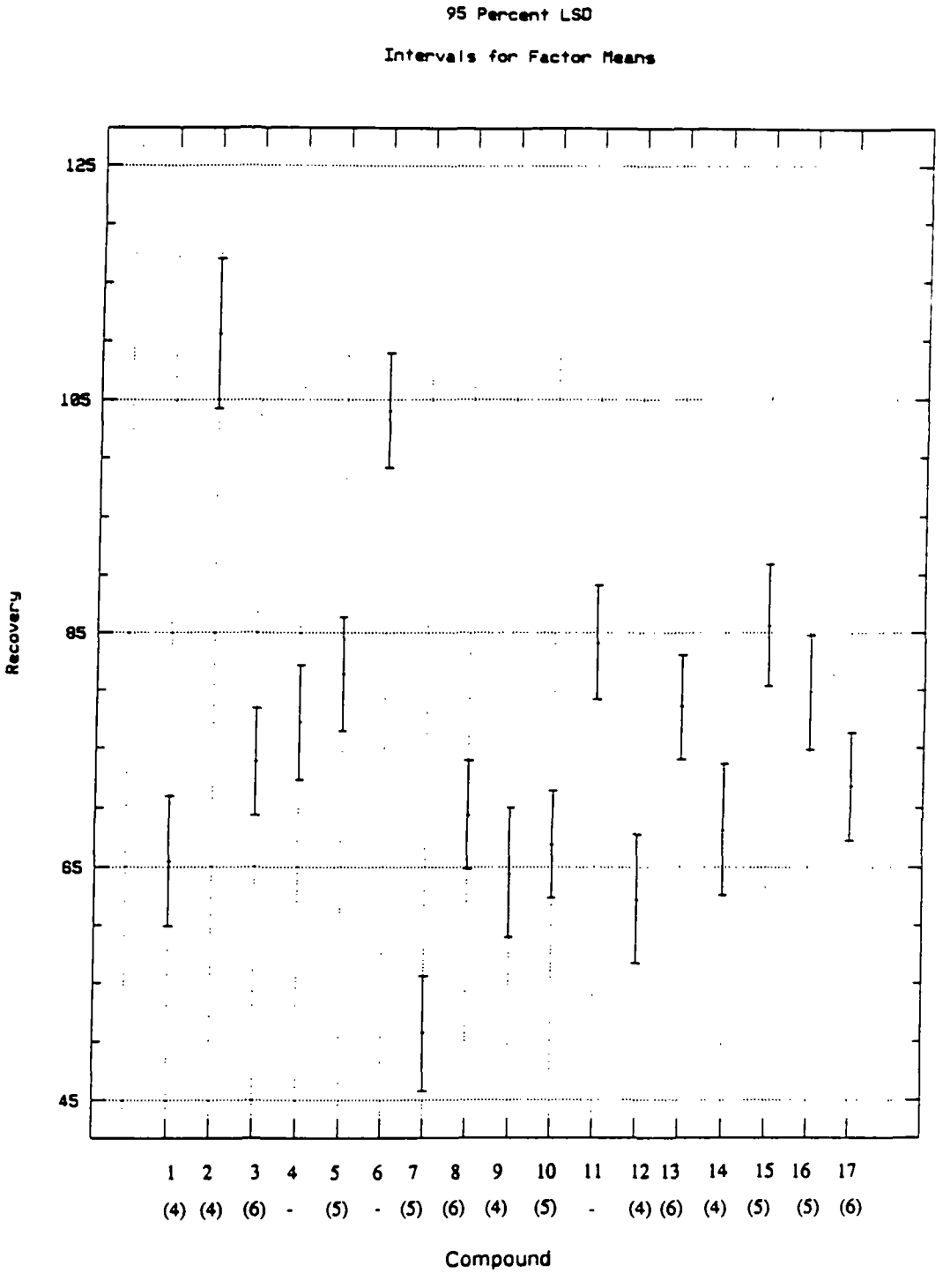

Figure 8. Percent recovery as a function of compound for the 17 PAH compounds (four to six matrices). Refer to Table 1 for compound number and to Tables 2 through 4 for the list of certified compounds in each matrix. The numbers in parentheses indicate the number of matrices that contained the individual compounds.

TABLE 7. AVERAGE RECOVERIES AND PERCENT RSDs FOR DRY AND WET SRS103-100 SOIL

Compound name	Certified value (mg/kg)	MAE[a] Dry matrix percent recovery (percent RSD)[b]		MAE[a] Wet matrix percent recovery (percent RSD)[b]		Percent RSD for extract injection[b]	Percent RSD for standard injection[b]
Naphthalene	23.6	150	(11.7)	143	(13.5)	0.3	0.5
2-Methylnaphthalene	56.7	98.0	(6.4)	95.0	(6.8)	0.5	NA[c]
Acenaphthene	590.9	112	(4.6)	111	(6.9)	0.6	1.1
Acenaphthylene	16.3	80.9	(5.9)	79.0	(6.0)	0.9	0.8
Anthracene	424.8	107	(4.5)	105	(7.6)	1.4	0.3
Benzo(a)anthracene	249.4	87.9	(6.2)	84.2	(6.4)	1.5	1.0
Benzo(a+k)fluoranthene	156.1	114	(5.0)	111	(7.6)	1.4	0.4
Benzo(a)pyrene	97.5	93.3	(4.6)	87.3	(7.0)	2.2	0.6
Chrysene	310.4	95.5	(6.3)	92.8	(7.6)	1.8	1.2
Fluorene	475.5	97.3	(4.4)	96.3	(6.3)	1.8	1.3
Fluoranthene	1,306.6	109	(4.8)	106	(8.0)	0.7	0.5
Phenanthrene	1,449.5	137	(4.5)	135	(7.5)	0.3	0.3
Pyrene	961.2	117	(4.0)	115	(7.5)	0.7	1.0
Dibenzofuran	305.6	109	(4.6)	108	(6.5)	0.6	1.0
Pentachlorophenol	884.0	80.3	(14.3)	104	(11.8)	11.9	1.1

[a] Six vessels were extracted simultaneously for 10 min at 115°C. The wet matrix contained 20 percent water.
[b] The number of determinations was six.
[c] Data not available.

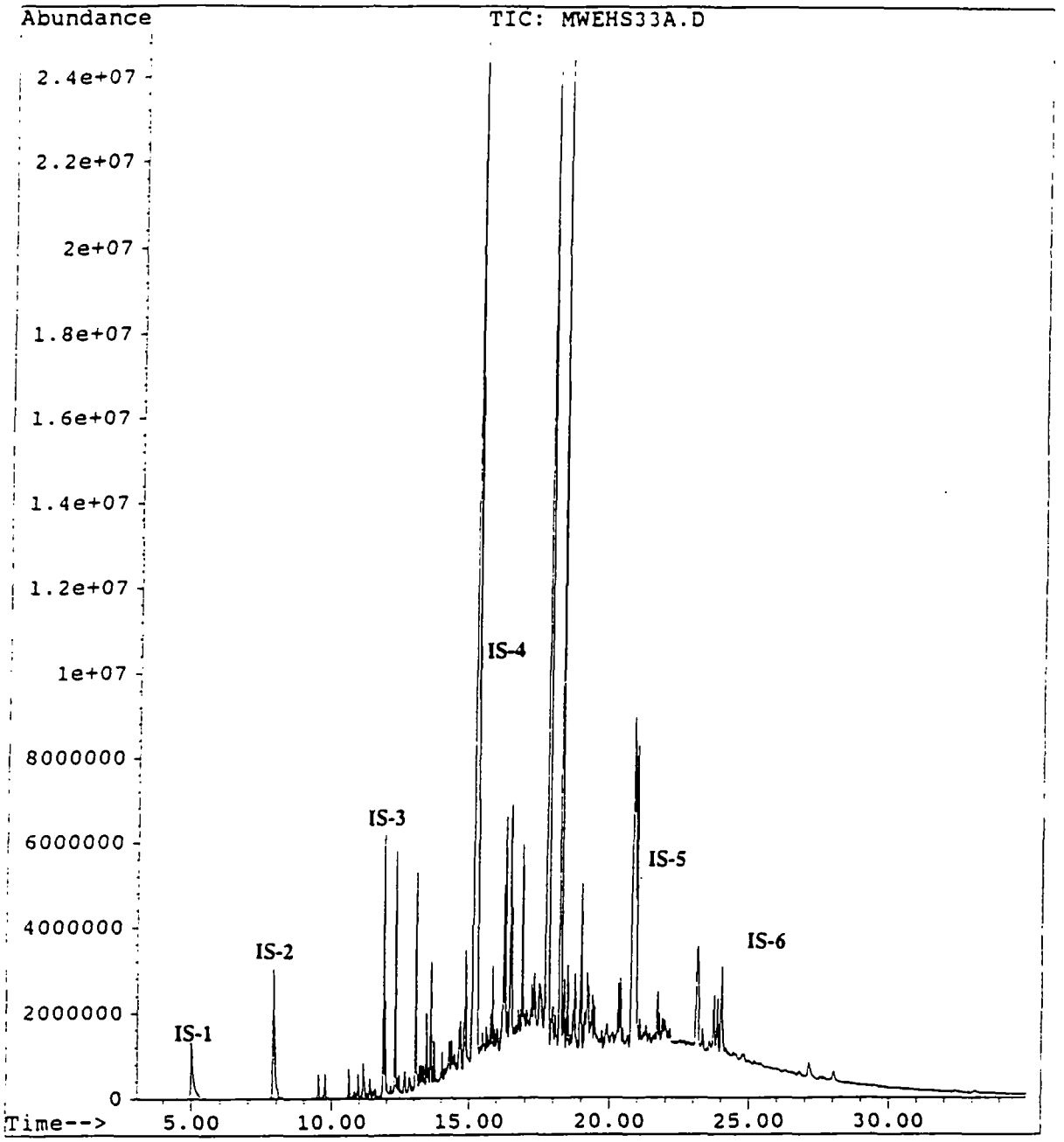

Figure 9a. GC/MS chromatogram of the extract obtained by MAE of the HS-3 marine sediment with hexane-acetone (1:1) (IS-1 through IS-6 are internal standards).

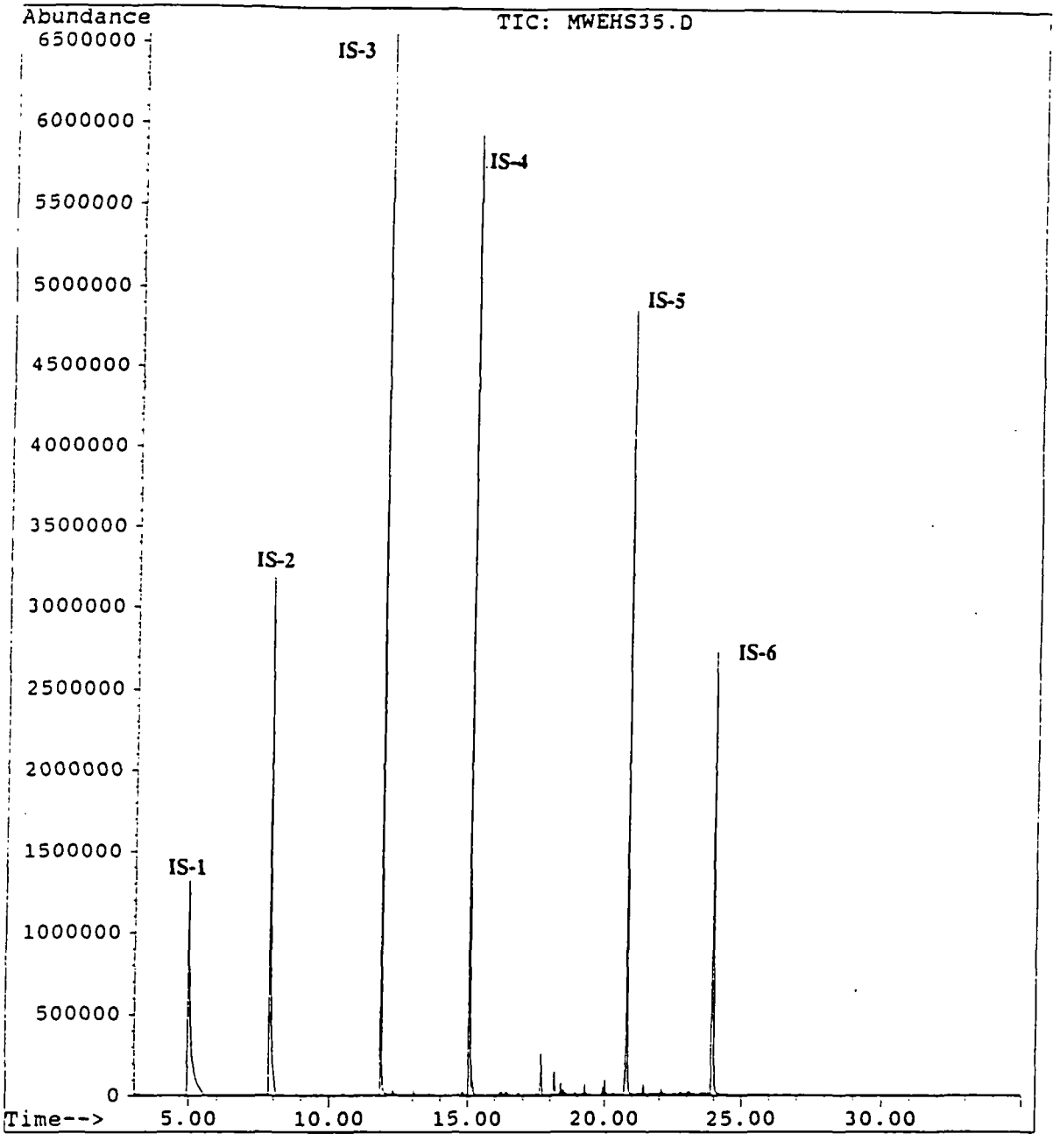

Figure 9b. GC/MS chromatogram of the extract from a second extraction performed on the HS-3 marine sediment using microwave energy and fresh solvent (IS-1 through IS-6 are internal standards).

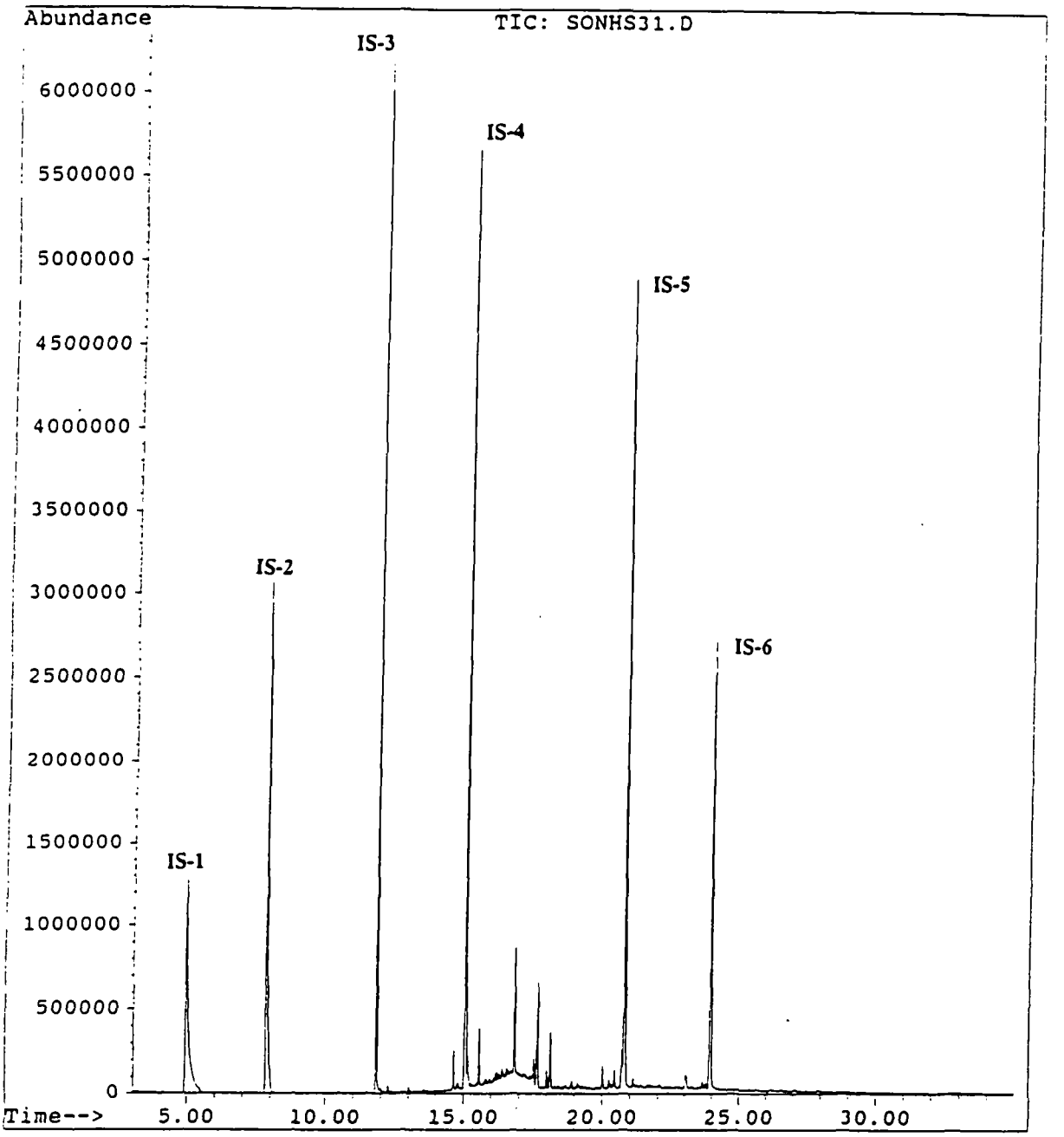

Figure 9c. GC/MS chromatogram of the sonication extract from the HS-3 marine sediment that was first extracted using microwave energy before extraction with fresh solvent using a sonic probe (IS-1 through IS-6 are internal standards).

TABLE 8. PERCENT RECOVERIES OF "NATIVE" AND SPIKED COMPOUNDS FROM ERA SOIL LOT NO. 321 WITH HEXANE-ACETONE (1:1) USING ROOM TEMPERATURE EXTRACTION AND MAE AT DIFFERENT TEMPERATURES AND PRESSURES[a]

Compound name	Certified value (mg/kg)	Room temperature			80°C/22 psi			115°C/72 psi			145°C/150 psi		
		5 min	10 min	20 min	5 min	10 min	20 min	5 min	10 min	20 min	5 min	10 min	20 min
"Native" compounds													
Anthracene	3.52	44.0	41.6	39.6	49.3	48.9	54.5	64.5	61.3	64.8	69.5	78.9	63.6
Benzo(b)fluoranthene	2.03	44.6	43.4	47.6	50.0	51.0	62.1	74.7	68.9	73.4	74.8	80.9	68.8
1,2-Dichlorobenzene	10.0	33.4	30.5	25.5	31.3	33.8	32.4	37.6	32.7	33.4	29.6	32.3	27.6
Chrysene	4.47	70.7	65.5	61.6	66.0	69.3	83.7	106	87.2	100	89.7	104	84.3
Fluoranthene	8.09	65.2	62.7	61.1	70.2	72.3	83.5	102	89.3	96.6	91.1	102	89.4
Naphthalene	2.96	58.6	50.5	46.4	53.9	56.8	64.9	71.4	105	113	160	69.3	66.8
Dibenzofuran	1.70	67.4	59.9	53.8	71.4	74.1	80.7	91.6	82.2	84.4	83.6	92.7	81.3
Pyrene	3.78	48.7	48.5	44.6	55.6	55.6	66.7	81.2	78.8	79.4	78.3	92.1	79.7
2-Methylphenol	5.46	20.3	19.2	16.7	20.7	21.1	23.2	25.4	17.9	23.8	24.5	28.0	20.6
N-Nitroso-di-n-propylamine	5.01	93.7	89.2	79.7	78.0	81.9	84.3	98.7	80.7	85.6	85.9	85.7	74.9
Nitrobenzene	7.87	90.2	87.9	74.7	79.4	83.7	84.3	104	82.6	88.6	96.3	98.2	83.4
2,4-Dichlorophenol	5.52	65.0	64.0	57.8	78.7	80.9	79.6	112	87.1	93.2	96.4	103	85.7
1,2,4-Trichlorobenzene	9.36	52.5	49.4	43.7	53.0	54.6	55.7	67.0	55.7	59.4	54.1	61.9	52.5
2,4,6-Trichlorophenol	2.82	59.1	58.2	48.6	71.1	70.8	82.4	94.8	90.9	100	109	129	91.1
2,4-Dinitrotoluene	4.86	139	123	112	123	122	140	143	142	144	140	159	125
Carbazole	5.00	79.4	74.8	65.6	87.6	95.3	107	136	113	120	125	142	118
Di-n-butyl-phthalate	3.43	129	121	112	113	117	141	166	125	145	134	146	130
Bis(2-ethylhexyl)phthalate	7.62	53.5	51.4	54.9	59.7	62.2	73.2	92.4	79.1	88.6	85.7	89.8	76.7
Pentachlorophenol	6.68	36.3	34.1	35.3	47.6	45.7	56.8	52.5	67.5	76.6	76.8	83.6	76.0
Spikes													
Anthracene-d_{10}	5.00	87.6	86.4	89.2	86.2	82.3	84.4	83.9	87.9	88.4	96.0	93.8	85.7
Fluoranthene-d_{10}	5.00	98.8	89.0	105	95.2	91.3	97.1	92.6	98.0	101	104	100	93.1
Benzo(a)anthracene-d_{12}	5.00	99.2	94.5	103	98.2	91.6	97.7	98.2	96.8	96.6	99.6	101	92.2

[a] Single determinations. The sample size was 5 g; the solvent volume was 30 mL. The extracts were concentrated 30-fold prior to GC/MS analysis.

The average recoveries and the percent RSDs were also determined for this matrix using six 5-g portions of the ERA soil Lot No. 323 (both dry and wet). We could not use material from Lot No. 321, since it was no longer available from ERA. However, the ERA soil Lot No. 321 matrix was the same as in the new Lot No. 323, and the spike levels (certified values) were comparable to those in Lot No. 321. Table 9 identifies the 20 compounds known to be present in ERA soil Lot No. 323 and gives their certified values, the typical recoveries achieved using the EPA-approved methodology (Soxhlet or sonication techniques), and the recoveries that we achieved using MAE. In addition, the percent RSDs are shown for six consecutive injections of one of the extracts and of a calibration standard. The repeatability of the injection technique was better than 1.4 percent (except for two of the 23 values at 2.9 percent) for the calibration standard and better than 1.1 percent for the ERA extract (except for two of the 23 values at 4.3 and 5.3 percent). There was more spread in the average recoveries for the ERA soil since the compounds covered a wider range of volatilities. However, the recoveries that we achieved using MAE were for the most part higher than those achieved by the EPA-approved methodology. When comparing the typical recoveries achieved with the EPA-approved methodology and those achieved with the MAE for the dry sample (Table 9), we found that 11 compounds exhibited an increase in recovery greater than 10 percent (the range was 10 to 56 percent), two compounds exhibited a 6 to 7 percent increase, two compounds showed no change in recovery, and five compounds exhibited a decrease in recovery (10 to 15 percent). In the case of the wet matrix, the recoveries for the MAE were higher than those for conventional extraction for 14 of the 20 compounds and lower (but not exceeding 15 percent) for six compounds.

Stability Studies

To test for possible compound degradation during the extraction, we performed experiments in which we heated solvent (hexane-acetone, 1:1) and solvent-soil suspensions, spiked with the target compounds, at 115°C for 10 min using microwave energy at 50 percent power. To account for possible losses during the nitrogen blowdown evaporation, we took an equivalent volume of hexane-acetone (1:1) and spiked it with the target compounds at the same concentrations as the samples subjected to MAE. The spiked solvent was then concentrated to 1 mL for phenols and PAHs and was analyzed as is for organochlorine pesticides. The results are presented in Tables 10 through 12.

For the 14 phenols tested (Table 10), we did not find any degradation when using solvent only (recoveries ranged from 80.3 to 111 percent). When soil was present, we found slightly lower but acceptable recoveries (> 70 percent) for 10 compounds, two compounds had borderline recoveries (2-nitrophenol at 66.7 percent and pentachlorophenol at 55 percent), and two compounds (2,4-dinitrophenol and 2-methyl-4,6-dinitrophenol) appeared to have degraded since their recoveries were 9.4 percent and 17.1 percent, respectively. Catalytic reactions in the presence of the soil or simply strong adsorption to soil particles may have been the cause for these low recoveries.

In the case of the organochlorine pesticides (Table 11), we did not find any degradation when using solvent only (recoveries ranged from 83 to 117 percent). When soil was present, recoveries were still quantitative for all compounds but gamma-chlordane (recovery 74 percent). We found some losses for three of the four BHC isomers; however, their recoveries were still almost quantitative (the range was 82 to 88 percent).

In the case of the PAHs and a few base/neutral compounds (Table 12), we did not find any degradation when using solvent only (recoveries ranged from 85.2 to 135 percent). When soil was present, five compounds exhibited no change in recoveries but 21 compounds showed approximately

TABLE 9. AVERAGE RECOVERIES AND PERCENT RSDs FOR DRY AND WET ERA SOIL LOT NO. 323

Compound name	Certified value (mg/kg)[b]	Typical recovery using approved EPA methodology[b]	MAE[a] Dry matrix percent recovery (percent RSD)[c]	MAE[a] Wet matrix percent recovery (percent RSD)[d]	Percent RSD for extract analysis[c]	Percent RSD for standard analysis[c]
"Native" compounds						
Anthracene	6.97	62.6	72.6 (11.0)	72.0 (2.7)	0.5	0.3
Benzo(a)anthracene	5.16	66.1	74.2 (10.3)	81.3 (5.3)	0.3	1.0
Benzo(k)fluoranthene	2.35	63.4	49.1 (8.6)	52.3 (4.0)	0.6	2.9
Chrysene	9.45	64.0	85.2 (10.5)	83.6 (2.8)	0.7	1.2
Naphthalene	7.77	58.7	60.3 (13.2)	59.0 (6.1)	0.4	0.5
Pyrene	6.32	66.0	74.7 (9.7)	85.9 (4.9)	0.9	1.0
Dibenzofuran	6.50	73.7	80.8 (8.8)	86.1 (2.9)	0.5	1.0
1,2-Dichlorobenzene	13.0	43.5	39.1 (18.3)	28.8 (9.6)	0.2	0.4
1,3-Dichlorobenzene	8.58	30.5	26.2 (15.8)	17.7 (13.5)	0.4	0.3
2-Methylphenol	3.41	46.6	34.6 (15.4)	36.3 (5.1)	0.6	0.5
3-Methylphenol	4.62	64.9	72.2 (13.9)	74.6 (2.9)	0.6	0.9
1,2,4-Trichlorobenzene	1.87	57.2	59.2 (13.1)	55.5 (5.7)	0.7	0.3
2,4,6-Trichlorophenol	9.36	57.1	89.0 (14.3)	89.7 (21.8)	1.1	1.0
2,4-Dinitrotoluene	4.82	79.7	106 (14.3)	117 (9.2)	0.7	0.5
Bis(2-ethylhexyl)phthalate	1.54	89.6	74.7 (10.0)	81.5 (5.8)	0.9	0.4
Isophorone	4.75	67.2	76.5 (11.9)	78.1 (2.4)	0.6	0.5
4-Chlorophenyl phenyl ether	3.40	80.6	79.4 (9.3)	87.0 (4.3)	1.1	0.3
Butyl benzyl phthalate	8.48	73.6	90.0 (11.5)	100 (8.1)	0.9	0.9
Phenol	3.94	65.0	72.2 (18.9)	72.7 (3.8)	0.4	0.8
Pentachlorophenol	9.63	42.7	64.6 (39.0)	96.8 (9.4)	5.3	1.1
Spikes						
Anthracene-d_{10}	5.60	—	83.1 (11.6)	91.4 (2.7)	0.6	2.9
Fluoranthene-d_{10}	5.60	—	82.4 (8.6)	96.3 (5.0)	0.7	0.5
Benzo(a)anthracene-d_{12}	5.60	—	85.2 (9.1)	102 (8.7)	4.3	1.4

[a] Samples in five to six vessels were extracted simultaneously for 10 min at 115°C. The wet matrices contained 20 percent water.
[b] Reported by ERA.
[c] The number of determinations was six.
[d] The number of determinations was five.

TABLE 10. AVERAGE RECOVERIES AND PERCENT RSDs FOR PHENOLS AFTER MICROWAVE HEATING – SOLVENT VERSUS SOLVENT/SOIL SUSPENSION[a]

	Solvent only		Solvent and soil		
Compound name	Percent average recovery	Percent RSD	Percent average recovery	Percent RSD	Blowdown evaporation
Phenol	80.3	22.9	74.9	7.6	84.5
2-Chlorophenol	87.4	14.6	76.7	8.9	87.1
2-Methylphenol	85.0	12.5	75.9	7.4	83.0
3-Methylphenol	91.1	11.5	79.1	8.2	86.9
2-Nitrophenol	100	20.9	66.7	9.2	85.4
2,4-Dimethylphenol	86.9	7.0	76.4	9.7	71.3
2,4-Dichlorophenol	87.2	9.3	75.2	6.4	84.1
4-Chloro-3-methylphenol	89.4	8.0	78.8	4.6	85.2
2,4,6-Trichlorophenol	90.4	8.8	76.9	5.5	84.7
2,4-Dinitrophenol	106	21.0	9.4	20.2	82.7
4-Nitrophenol	86.7	10.8	74.2	6.7	82.6
2,3,4,6-Tetrachlorophenol	91.1	8.9	73.9	5.6	84.4
2-Methyl-4,6-dinitrophenol	111	18.7	17.1	34.6	85.7
Pentachlorophenol	93.4	9.8	55.0	7.3	81.6

[a] The number of determinations was three. The amount spiked was 50 μg per compound.

TABLE 11. AVERAGE RECOVERIES AND PERCENT RSDs FOR ORGANOCHLORINE PESTICIDES AFTER MICROWAVE HEATING – SOLVENT VERSUS SOLVENT/SOIL SUSPENSION[a]

	Solvent only		Solvent and soil	
Compound name	Percent average recovery	Percent RSD	Percent average recovery	Percent RSD
alpha-BHC	104	1.6	82.4	8.4
beta-BHC	103	1.5	81.9	9.3
gamma-BHC	104	1.7	88.0	8.5
delta-BHC	107	1.5	95.5	9.5
Heptachlor	105	1.5	108	12.2
Aldrin	107	1.3	92.5	8.4
Heptachlor epoxide	107	2.3	100	11.5
gamma-Chlordane	83.0	2.3	74.0	11.0
Endosulfan-I	110	4.0	98.2	11.4
alpha-Chlordane	99.3	0.5	86.9	9.6
Dieldrin	108	2.7	125	14.8
4,4'-DDE	107	0.9	93.9	9.6
Endrin	109	0.6	123	14.4
Endosulfan-II	106	1.4	99.6	8.4
4,4'-DDD	111	2.0	118	15.4
Endrin aldehyde	117	1.0	92.6	11.9
Endosulfan sulfate	109	1.5	101	11.0
4,4'-DDT	105	1.0	114	22.7
Endrin ketone	107	1.2	123	14.9
Methoxychlor	115	6.0	169	17.4

[a] The number of determinations was three. The amount spiked was 1.5 μg per compound. The hexane-acetone extracts were not concentrated.

TABLE 12. AVERAGE RECOVERIES AND PERCENT RSDs FOR PAHs AND SELECTED BASE/NEUTRAL COMPOUNDS AFTER MICROWAVE HEATING – SOLVENT VERSUS SOLVENT/SOIL SUSPENSION[a]

Compound name	Solvent only		Solvent and soil		
	Percent average recovery	Percent RSD	Percent average recovery	Percent RSD	Blowdown only
PAHs					
Acenaphthene	103	2.2	72.6	4.0	95.8
Acenaphthylene	105	1.9	74.8	4.1	97.9
Anthracene	109	3.0	84.8	2.4	103
Anthracene-d_{10}	95.5	2.6	76.6	2.5	89.8
Benzo(a)anthracene	103	2.7	79.5	2.1	95.9
Benzo(a)anthracene-d_{12}	106	1.9	82.4	3.5	98.8
Benzo(a)pyrene	94.7	2.2	101	10.3	88.1
Benzo(b)fluoranthene	93.6	2.2	103	11.1	85.2
Benzo(k)fluoranthene	94.5	4.2	101	11.6	90.7
Benzo(ghi)perylene	91.0	2.3	100	8.9	81.1
Chrysene	105	2.2	81.3	1.7	99.0
Fluoranthene-d_{10}	105	2.3	82.1	4.1	99.0
Fluorene	106	2.8	77.5	3.9	98.1
Fluoranthene	109	3.3	85.0	4.1	102
Indeno(1,2,3-cd)pyrene	102	2.7	109	9.9	93.3
Naphthalene	93.3	8.0	66.3	5.0	90.7
Phenanthrene	106	3.5	81.9	2.3	99.0
Pyrene	102	2.3	78.1	2.0	94.9
Base/Neutral Compounds					
Dibenzofuran	105	3.2	75.2	3.7	96.1
1,2-Dichlorobenzene	85.2	16.7	62.1	5.8	86.8
1,3-Dichlorobenzene	87.5	15.3	61.6	7.4	88.6
1,2,4-Trichlorobenzene	93.0	6.8	65.3	5.4	89.8
2,4-Dinitrotoluene	135	3.3	96.7	3.1	126
Isophorone	96.6	1.6	67.4	4.9	90.9
4-Chlorophenyl phenyl ether	107	3.2	77.1	3.8	97.1
Butyl benzyl phthalate	112	1.8	84.5	2.0	105

[a] The number of determinations was three. The amount spiked was 50 μg per compound.

a 30-percent loss. Considering that losses during the blowdown step could be as high as 15 percent for some of these compounds and that the measurement error could also be as high as 15 percent, we concluded that the 30-percent loss is not unreasonable for these types of compounds. We believe some of the more volatile compounds (e.g., chlorinated benzenes, naphthalene) may be partially lost during the filtration step.

Comparison of MAE with Other Extraction Techniques

To compare MAE with other extraction techniques, we summarized in Tables 13 through 17 the concentrations of the various compounds (known to be present in each sample) in each matrix that was extracted by sonication, Soxtec, and MAE at 115°C for 10 min. The data for the ERA soil are not presented since we did not have enough material to extract by sonication or Soxtec extraction. The Soxtec extractions and MAEs were performed with hexane-acetone (1:1), and the sonication extractions were performed with methylene chloride-acetone (9:1); thus, the sonication data may not be comparable to MAE data. In Table 18, we report the correlation coefficients and the regression equations for each matrix.

Overall, the data indicate that there is significant correlation at the 95-percent significance level between the MAE and the other extraction techniques. The slopes of the regression equations ranged from 0.653 to 1.934. The various slopes indicated that the extraction efficiencies by MAE were higher than those achieved by sonication for two matrices (HS-3 marine sediment and SRS103-100 soil), almost identical for the HS-5 marine sediment, slightly lower for the HS-4 marine sediment, and still reasonable for the SRM1941 marine sediment. MAE gave higher recoveries than Soxtec for the HS-3 marine sediment and lower recoveries for the HS-4 marine sediment. When comparing MAE data with the certified values (that were obtained either by sonication and/or Soxhlet extraction), we found that MAE recoveries ranged from 70 percent for the HS-5 marine sediment to 112 percent for the SRS103-100 soil.

The encouraging results obtained in this study with MAE indicate that efficient extraction of analytes from a solid matrix could be achieved by heating the sample/solvent suspension in a closed vessel for a defined period of time using microwave energy. Heating the sample/solvent in a convection oven would undoubtedly be sufficient as we have seen from the two preliminary experiments (data not shown) conducted here. However, the purpose of this study was not to develop an extraction technique using a closed-vessel system in a convection oven but rather to evaluate the use of a microwave system because of its easy controllability and convenience.

TABLE 13. COMPARISON OF ANALYTE CONCENTRATIONS IN EXTRACTS GENERATED BY SONICATION, SOXTEC, AND MAE WITH THE CERTIFIED VALUES FOR THE HS-3 MARINE SEDIMENT

Compound name	Certified value (mg/kg)[a]	Concentration measured by sonication extraction and GC/MS (mg/kg)[b]	Concentration measured by Soxtec extraction and GC/MS (mg/kg)[b]	Concentration measured by MAE and GC/MS (mg/kg)[b,c]
Acenaphthene	4.5 ± 1.5	1.8	5.8	3.4
Acenaphthylene	0.3 ± 0.1	0.18	0.5	0.38
Anthracene	13.4 ± 0.4	3.5	10.1	7.0
Benzo(a)anthracene	14.6 ± 2.0	7.6	8.2	10.8
Benzo(a)pyrene	7.4 ± 3.6	2.7	3.6	3.7
Benzo(b)fluoranthene	7.7 ± 1.2	7.0	10.4	11.3
Benzo(k)fluoranthene	2.8 ± 2.0			
Benzo(ghi)perylene	5.0 ± 2.0	1.8	2.8	3.9
Chrysene	14.1 ± 2.0	8.8	8.1	10.8
Dibenzo(ah)anthracene	1.3 ± 0.5	0.74	1.2	2.0
Fluorene	13.6 ± 3.1	4.9	7.3	6.7
Fluoranthene	60 ± 9	34.7	30.8	53.0
Indeno(1,2,3-cd)pyrene	5.4 ± 1.3	2.2	2.8	3.8
Naphthalene	9.0 ± 0.7	1.8	4.3	7.7
Phenanthrene	85 ± 20	46.8	38.2	74.2
Pyrene	39 ± 9	21.6	16.8	32.7

[a] Value reported by the National Research Council of Canada.
[b] Single determinations.
[c] MAE at 115°C for 10 min.

TABLE 14. COMPARISON OF ANALYTE CONCENTRATIONS IN EXTRACTS GENERATED BY SONICATION, SOXTEC, AND MAE WITH THE CERTIFIED VALUES FOR THE HS-4 MARINE SEDIMENT

Compound name	Certified value (mg/kg)[a]	Concentration measured by sonication extraction and GC/MS (mg/kg)[b]	Concentration measured by Soxtec extraction and GC/MS (mg/kg)[b]	Concentration measured by MAE and GC/MS (mg/kg)[b,c]
Acenaphthene	0.15[d]	e	e	0.02
Acenaphthylene	0.15[d]	e	e	0.06
Anthracene	0.14 ±0.07	0.06	0.18	0.10
Benzo(a)anthracene	0.53 ±0.05	0.32	0.38	0.75
Benzo(a)pyrene	0.65 ±0.08	0.28	0.38	0.29
Benzo(b)fluoranthene	0.70 ±0.15	0.59	0.98	0.58
Benzo(k)fluoranthene	0.36 ±0.05			
Benzo(ghi)perylene	0.58 ±0.22	0.21	e	0.48
Chrysene	0.65 ±0.08	0.44	0.50	0.41
Dibenzo(ah)anthracene	0.12 ±0.05	e	e	d
Fluorene	0.15[d]	e	e	0.04
Fluoranthene	1.25 ±0.10	0.75	1.1	0.92
Indeno(1,2,3-cd)pyrene	0.51 ±0.15	0.24	e	0.57
Naphthalene	0.15[d]	e	e	0.06
Phenanthrene	0.68 ±0.08	0.34	0.58	0.43
Pyrene	0.94 ±0.12	0.61	0.90	0.82

[a] Value reported by the National Research Council of Canada.
[b] Single determinations.
[c] MAE at 115°C for 10 min.
[d] Upper limit; the amount present is not greater than 0.15 mg/kg.
[e] Not detected; the approximate detection limit was 0.1 mg/kg.

TABLE 15. COMPARISON OF ANALYTE CONCENTRATIONS IN EXTRACTS GENERATED BY SONICATION AND MAE WITH THE CERTIFIED VALUES FOR THE HS-5 MARINE SEDIMENT

Compound name	Certified value (mg/kg)[a]	Concentration measured by sonication extraction and GC/MS (mg/kg)[b]	Concentration measured by MAE and GC/MS (mg/kg)[b,c]
Acenaphthene	0.23 ± 0.10	0.03	0.04
Acenaphthylene	d	0.06	0.45
Anthracene	0.38 ± 0.15	0.16	0.25
Benzo(a)anthracene	2.9 ± 1.2	1.1	2.2
Benzo(a)pyrene	1.7 ± 0.8	0.58	0.38
Benzo(b)fluoranthene	2.0 ± 1.0	1.9	1.3
Benzo(k)fluoranthene	1.0 ± 0.4		
Benzo(ghi)perylene	1.3 ± 0.3	0.19	0.47
Chrysene	2.8 ± 0.9	1.9	1.4
Dibenzo(ah)anthracene	0.2 ± 0.1	0.12	d
Fluorene	0.4 ± 0.10	0.11	0.13
Fluoranthene	8.4 ± 2.6	5.5	5.9
Indeno(1,2,3-cd)pyrene	1.3 ± 0.7	0.55	0.66
Naphthalene	0.25 ± 0.07	0.04	0.15
Phenanthrene	5.2 ± 1.0	2.8	3.2
Pyrene	5.8 ± 1.8	3.2	3.8

[a] Value reported by the National Research Council of Canada.
[b] Single determinations.
[c] MAE at 115°C for 10 min.
[d] Not detected; the approximate detection limit was 0.1 mg/kg.

TABLE 16. COMPARISON OF ANALYTE CONCENTRATIONS IN EXTRACTS GENERATED BY SONICATION AND MAE WITH THE CERTIFIED VALUES FOR THE SRM1941 MARINE SEDIMENT

Compound name	Certified value (mg/kg)[a]	Concentration measured by sonication extraction and GC/MS (mg/kg)[b]	Concentration measured by MAE and GC/MS (mg/kg)[b,c]
Acenaphthene[d]	0.052 ± 0.002	e	0.042
Acenaphthylene[d]	0.115 ± 0.010	0.041	0.098
Anthracene	0.202 ± 0.042	0.109	0.186
Benzo(a)anthracene	0.55 ± 0.079	d	0.376
Benzo(a)pyrene	0.67 ± 0.13	0.294	0.396
Benzo(b)fluoranthene	0.78 ± 0.19	0.835	0.990
Benzo(k)fluoranthene	0.444 ± 0.049		
Benzo(ghi)perylene	0.516 ± 0.08	0.135	0.454
Chrysene[d]	0.702 ± 0.016	e	0.454
Fluorene	0.104 ± 0.005	e	0.056
Fluoranthene	1.22 ± 0.24	0.950	1.03
Indeno(1,2,3-cd)pyrene	0.569 ± 0.04	0.285	0.398
2-Methylnaphthalene[d]	0.406 ± 0.036	e	0.254
Naphthalene[d]	1.322 ± 0.014	0.147	f
Perylene	0.422 ± 0.03	f	f
Phenanthrene	0.577 ± 0.059	0.344	0.494
Pyrene	1.08 ± 0.20	0.915	0.604

[a] Value reported by the National Research Council of Canada.
[b] Single determinations.
[c] MAE at 115°C for 10 min.
[d] Concentration reported for this compound is not certified by NIST.
[e] Not detected; the approximate detection limit was 0.1 mg/kg.
[f] Data not available.

TABLE 17. COMPARISON OF ANALYTE CONCENTRATIONS IN EXTRACTS GENERATED BY SOXTEC AND MAE WITH THE CERTIFIED VALUES FOR THE SRS103-100 SOIL

Compound name	Certified value (mg/kg)[a]	Concentration measured by sonication extraction and GC/MS (mg/kg)[b]	Concentration measured by MAE and GC/MS (mg/kg)[b,c]
Acenaphthene	591 ± 104	683	556
Acenaphthylene	16.3 ± 11.1	21.0	19.4
Anthracene	425 ± 67.5	553	450
Benzo(a)anthracene	249 ± 56.8	240	210
Benzo(a)pyrene	97.5 ± 26.6	78.0	79.2
Benzo(k+b)fluoranthene	156 ± 40.1	179	142
Chrysene	310 ± 62.9	272	277
Fluorene	475 ± 101	456	441
Fluoranthene	1,307 ± 396	1,041	1,320
2-Methylnaphthalene	56.7 ± 21.0	78.9	53.5
Naphthalene	23.6 ± 28.1	41.1	32.1
Phenanthrene	1,450 ± 570	1,315	1,798
Pyrene	961 ± 428	714	980
Dibenzofuran	306 ± 74.8	378	279
Pentachlorophenol	884 ± 692	1,070	858

[a] Value reported by Fisher Scientific.
[b] Single determinations.
[c] MAE at 115°C for 10 min.

TABLE 18. CORRELATION OF THE DATA OBTAINED FROM MAE EXTRACTS FOR DIFFERENT MATRICES WITH THE CERTIFIED VALUES AND THE VALUES OBTAINED FROM SONICATION OR SOXTEC EXTRACTS

Type of extraction	HS-3 marine sediment	HS-4 marine sediment	HS-5 marine sediment	SRM1941 marine sediment	SRS103-100 soil
Reported certified value	r = 0.996 y = -1.263+0.884x	r = 0.876 y = -0.006 + 0.739x	r = 0.985 y = -0.285+0.701x	r = 0.962 y = -0.009 + 0.747x	r = 0.989 y = -47.2+1.122x
Sonication extraction	r = 0.997 y = 0.436+1.539x	r = 0.779 y = 0.183 + 0.916x	r = 0.969 y = -0.099+1.045x	r = 0.889 y = 0.178 + 0.779x	r = 0.954 y = -75.9+1.213x
Soxtec extraction	r = 0.983 y = 4.026+1.934x	r = 0.767 y = 0.129 + 0.653x	a	a	a

[a] Data not available.

REFERENCES

1. Ganzler, K.; Salgo, A.; Valko, K. "Microwave Extraction -- A Novel Sample Preparation Method for Chromatography," J. Chromatogr. **371**, 299-306 (1986).

2. Ganzler, K.; Salgo, A. "Microwave Extraction -- A New Method Superseding Traditional Soxhlet Extraction," Z. Lebensm.-Unters. Forsch. **184**, 274-276 (1987).

3. Onuska, F. E.; Terry, K.A. "Extraction of Pesticides from Sediments Using a Microwave Technique," Chromatographia **36**, 191-194 (1993).

4. Pare, J. R. J., et al. "Microwave Extraction of Volatile Oils and Apparatus Therefor," Eur. Pat. Appl. EP485668 A1 (1992).

5. Pare, J. R. J., et al. "Microwave-Assisted Natural Products Extraction," U. S. Patent 5,002,784 (1991).

6. Freitag, W.; John, O. "Fast Separation of Stabilizers from Polyolefins by Microwave Heating," Angew. Makromol. Chem. **175**, 181-185 (1990).

7. Lopez-Avila, V.; Bauer, K.; Milanes, J.; Beckert, W. F. "Evaluation of a Soxtec Extraction Procedure for Extracting Organic Compounds from Soils and Sediments," J. AOAC Internat. 76, 864-880 (1993).

8. Lopez-Avila, V. "Development of a Soxtec Extraction Procedure for Extracting Organic Compounds from Soils and Sediments," EPA Report 600/X-91/140, Environmental Monitoring Systems Laboratory, Las Vegas, NV, October 1991.

APPENDIX A

PERCENT-RECOVERY RESULTS OF THE GC/MS ANALYSES FOR THE SIX CERTIFIED REFERENCE MATERIALS

TABLE A-1. PERCENT RECOVERIES OF "NATIVE" AND SPIKED COMPOUNDS FROM THE HS-3 MARINE SEDIMENT WITH HEXANE-ACETONE (1:1) AT ROOM TEMPERATURE[a]

Compound name	Certified value (mg/kg)	Percent recovery		
		5 min	10 min	20 min
"Native" compounds				
Naphthalene	9.0 ± 0.7	28.6	29.0	44.6
Acenaphthylene[b]	0.3 ± 0.1	97.3	101	101
Acenaphthene	4.5 ± 1.5	47.1	44.7	54.9
Fluorene	13.6 ± 3.1	33.8	31.8	40.7
Phenanthrene	85 ± 2.0	53.8	49.0	62.1
Anthracene	13.4 ± 0.5	32.9	33.9	39.9
Fluoranthene	60 ± 9.0	54.7	49.1	67.3
Pyrene	39 ± 9.0	50.3	45.8	59.8
Benzo(a)anthracene	14.6 ± 2.0	40.6	36.8	48.4
Chrysene	14.1 ± 2.0	49.4	46.4	56.1
Benzo(b)fluoranthene	7.7 ± 1.2	67.1	59.9	77.6
Benzo(k)fluoranthene	2.8 ± 2.0			
Benzo(a)pyrene	7.4 ± 3.6	38.1	33.1	38.9
Indeno(1,2,3-cd)pyrene	5.4 ± 1.3	43.1	40.7	49.4
Dibenzo(ah)anthracene	1.3 ± 0.5	97.7	85.4	106
Benzo(ghi)perylene	5.0 ± 2.0	49.0	45.2	54.4
Spikes				
Anthracene-d_{10}	25	55.6	48.5	70.0
Fluoranthene-d_{10}	25	68.7	55.1	83.1
Benzo(a)anthracene-d_{12}	25	60.4	49.2	69.4

[a] Single determination. The sample size was 5 g; the solvent volume was 30 mL. The extract was concentrated sixfold prior to GC/MS analysis.

[b] The extract was concentrated 30-fold prior to GC/MS analysis.

TABLE A-2. PERCENT RECOVERIES OF "NATIVE" AND SPIKED COMPOUNDS FROM THE HS-3 MARINE SEDIMENT WITH HEXANE-ACETONE (1:1) USING MAE (TEMPERATURE 80°C; PRESSURE 22 PSI)[a]

Compound name	Certified value (mg/kg)	Percent recovery		
		5 min	10 min	20 min
"Native" compounds				
Naphthalene	9.0 ± 0.7	41.6	50.4	66.0
Acenaphthylene[b]	0.3 ± 0.1	105	139	133
Acenaphthene	4.5 ± 1.5	63.6	69.8	68.7
Fluorene	13.6 ± 3.1	41.9	48.9	43.2
Phenanthrene	85 ± 2.0	64.6	73.1	67.1
Anthracene	13.4 ± 0.5	45.4	44.1	43.0
Fluoranthene	60 ± 9.0	70.8	78.6	73.1
Pyrene	39 ± 9.0	65.2	70.5	67.8
Benzo(a)anthracene	14.6 ± 2.0	57.9	57.7	55.3
Chrysene	14.1 ± 2.0	58.9	69.0	67.6
Benzo(b)fluoranthene	7.7 ± 1.2	83.2	92.1	85.7
Benzo(k)fluoranthene	2.8 ± 2.0			
Benzo(a)pyrene	7.4 ± 3.6	47.7	46.1	44.9
Indeno(1,2,3-cd)pyrene	5.4 ± 1.3	53.5	59.4	57.0
Dibenzo(ah)anthracene	1.3 ± 0.5	118	134	122
Benzo(ghi)perylene	5.0 ± 2.0	62.6	68.0	64.4
Spikes				
Anthracene-d_{10}	25	68.3	71.6	72.8
Fluoranthene-d_{10}	25	82.6	88.8	90.0
Benzo(a)anthracene-d_{12}	25	81.6	71.5	89.3

[a] Single determination. The sample size was 5 g; the solvent volume was 30 mL. The extract was concentrated sixfold prior to GC/MS analysis.

[b] The extract was concentrated 30-fold prior to GC/MS analysis.

TABLE A-3. PERCENT RECOVERIES OF "NATIVE" AND SPIKED COMPOUNDS FROM THE HS-3 MARINE SEDIMENT WITH HEXANE-ACETONE (1:1) USING MAE (TEMPERATURE 115°C; PRESSURE 72 PSI)[a]

Compound name	Certified value (mg/kg)	Percent recovery		
		5 min	10 min	20 min
"Native" compounds				
Naphthalene	9.0 ± 0.7	50.4	85.2	61.1
Acenaphthylene[b]	0.3 ± 0.1	118	125	158
Acenaphthene	4.5 ± 1.5	66.9	75.6	72.4
Fluorene	13.6 ± 3.1	40.5	49.3	50.9
Phenanthrene	85 ± 2.0	65.6	86.3	33.2
Anthracene	13.4 ± 0.5	45.9	52.0	49.0
Fluoranthene	60 ± 9.0	68.0	88.4	73.5
Pyrene	39 ± 9.0	63.1	83.8	67.7
Benzo(a)anthracene	14.6 ± 2.0	57.0	74.2	54.7
Chrysene	14.1 ± 2.0	59.1	76.7	66.2
Benzo(b)fluoranthene	7.7 ± 1.2	80.7	108	86.9
Benzo(k)fluoranthene	2.8 ± 2.0			
Benzo(a)pyrene	7.4 ± 3.6	41.2	55.0	44.1
Indeno(1,2,3-cd)pyrene	5.4 ± 1.3	55.4	70.2	57.8
Dibenzo(ah)anthracene	1.3 ± 0.5	122	152	126
Benzo(ghi)perylene	5.0 ± 2.0	61.8	78.4	66.4
Spikes				
Anthracene-d_{10}	25	72.2	83.7	70.0
Fluoranthene-d_{10}	25	85.2	106	88.4
Benzo(a)anthracene-d_{12}	25	80.5	105	86.3

[a] Single determination. The sample size was 5 g; the solvent volume was 30 mL. The extract was concentrated sixfold prior to GC/MS analysis.

[b] The extract was concentrated 30-fold prior to GC/MS analysis.

TABLE A-4. PERCENT RECOVERIES OF "NATIVE" AND SPIKED COMPOUNDS FROM THE HS-3 MARINE SEDIMENT WITH HEXANE-ACETONE (1:1) USING MAE (TEMPERATURE 145°C; PRESSURE 150 PSI)[a]

Compound name	Certified value (mg/kg)	Percent recovery		
		5 min	10 min	20 min
"Native" compounds				
Naphthalene	9.0 ± 0.7	61.1	123	73.8
Acenaphthylene[b]	0.3 ± 0.1	118	163	188
Acenaphthene	4.5 ± 1.5	64.7	53.1	66.4
Fluorene	13.6 ± 3.1	48.5	36.7	51.0
Phenanthrene	85 ± 2.0	70.0	55.8	68.5
Anthracene	13.4 ± 0.5	45.1	43.0	50.0
Fluoranthene	60 ± 9.0	77.2	56.4	81.4
Pyrene	39 ± 9.0	68.5	50.1	60.8
Benzo(a)anthracene	14.6 ± 2.0	56.8	40.5	52.5
Chrysene	14.1 ± 2.0	62.3	48.7	58.5
Benzo(b)fluoranthene	7.7 ± 1.2	83.6	60.8	78.8
Benzo(k)fluoranthene	2.8 ± 2.0			
Benzo(a)pyrene	7.4 ± 3.6	43.4	33.8	44.2
Indeno(1,2,3-cd)pyrene	5.4 ± 1.3	54.6	40.4	50.2
Dibenzo(ah)anthracene	1.3 ± 0.5	124	86.9	111
Benzo(ghi)perylene	5.0 ± 2.0	63.0	47.0	57.4
Spikes				
Anthracene-d_{10}	25	70.8	57.2	68.9
Fluoranthene-d_{10}	25	94.0	66.1	95.6
Benzo(a)anthracene-d_{12}	25	83.2	54.1	71.8

[a] Single determination. The sample size was 5 g; the solvent volume was 30 mL. The extract was concentrated sixfold prior to GC/MS analysis.

[b] The extract was concentrated 30-fold prior to GC/MS analysis.

TABLE A-5. PERCENT RECOVERIES OF "NATIVE" AND SPIKED COMPOUNDS FROM THE HS-4 MARINE SEDIMENT WITH HEXANE-ACETONE (1:1) AT ROOM TEMPERATURE[a]

Compound name	Certified value (mg/kg)	Percent recovery		
		5 min	10 min	20 min
"Native" compounds				
Naphthalene	0.15[b]	b	b	b
Acenaphthylene	0.15[b]	b	b	b
Acenaphthene	0.15[b]	b	b	b
Fluorene	0.15[b]	b	b	b
Phenanthrene	0.68 ± 0.08	26.8	40.6	40.6
Anthracene	0.14 ± 0.07	32.9	48.6	41.4
Fluoranthene	1.25 ± 0.10	27.4	44.0	43.8
Pyrene	0.94 ± 0.12	38.7	58.7	56.2
Benzo(a)anthracene	0.53 ± 0.05	49.4	74.0	90.2
Chrysene	0.65 ± 0.08	39.4	51.1	43.4
Benzo(b)fluoranthene	0.70 ± 0.15	21.9	34.5	32.3
Benzo(k)fluoranthene	0.36 ± 0.05			
Benzo(a)pyrene	0.65 ± 0.08	5.5	23.7	28.6
Indeno(1,2,3-cd)pyrene	0.51 ± 0.15	22.4	36.5	52.5
Dibenzo(ah)anthracene	0.12 ± 0.05	c	c	c
Benzo(ghi)perylene	0.58 ± 0.22	3.8	26.9	29.0
Spikes				
Anthracene-d_{10}	1.0	53.2	80.4	66.6
Fluoranthene-d_{10}	1.0	29.2	50.0	57.2
Benzo(a)anthracene-d_{12}	1.0	40.0	71.2	99.2

[a] Single determination. The sample size was 5 g; the solvent volume was 30 mL. The extract was concentrated 30-fold prior to GC/MS analysis.

[b] Upper limit; the amount present is not greater than 0.15 mg/kg. Therefore the percent recovery could not be calculated.

[c] Not detected; the approximate detection limit was 0.1 mg/kg.

TABLE A-6. PERCENT RECOVERIES OF "NATIVE" AND SPIKED COMPOUNDS FROM THE HS-4 MARINE SEDIMENT WITH HEXANE-ACETONE (1:1) USING MAE (TEMPERATURE 80°C; PRESSURE 22 PSI)[a]

Compound name	Certified value (mg/kg)	Percent recovery		
		5 min	10 min	20 min
"Native" compounds				
Naphthalene	0.15[b]	b	b	b
Acenaphthylene	0.15[b]	b	b	b
Acenaphthene	0.15[b]	b	b	b
Fluorene	0.15[b]	b	b	b
Phenanthrene	0.68 ± 0.08	51.2	57.6	62.1
Anthracene	0.14 ± 0.07	50.0	57.1	62.9
Fluoranthene	1.25 ± 0.10	53.8	62.9	72.2
Pyrene	0.94 ± 0.12	68.9	76.4	80.0
Benzo(a)anthracene	0.53 ± 0.05	105	123	136
Chrysene	0.65 ± 0.08	45.5	52.3	52.9
Benzo(b)fluoranthene	0.70 ± 0.15	46.6	49.4	53.0
Benzo(k)fluoranthene	0.36 ± 0.05			
Benzo(a)pyrene	0.65 ± 0.08	35.4	52.0	23.7
Indeno(1,2,3-cd)pyrene	0.51 ± 0.15	87.5	76.1	94.5
Dibenzo(ah)anthracene	0.12 ± 0.05	c	c	c
Benzo(ghi)perylene	0.58 ± 0.22	56.2	54.5	57.2
Spikes				
Anthracene-d_{10}	1.0	67.8	67.4	73.2
Fluoranthene-d_{10}	1.0	64.4	74.4	86.0
Benzo(a)anthracene-d_{12}	1.0	107	128	141

[a] Single determination. The sample size was 5 g; the solvent volume was 30 mL. The extract was concentrated 30-fold prior to GC/MS analysis.

[b] Upper limit; the amount present is not greater than 0.15 mg/kg. Therefore the percent recovery could not be calculated.

[c] Not detected; the approximate detection limit was 0.1 mg/kg.

TABLE A-7. PERCENT RECOVERIES OF "NATIVE" AND SPIKED COMPOUNDS FROM THE HS-4 MARINE SEDIMENT WITH HEXANE-ACETONE (1:1) USING MAE (TEMPERATURE 115°C; PRESSURE 72 PSI)[a]

Compound name	Certified value (mg/kg)	Percent recovery		
		5 min	10 min	20 min
"Native" compounds				
Naphthalene	0.15[b]	b	b	b
Acenaphthylene	0.15[b]	b	b	b
Acenaphthene	0.15[b]	b	b	b
Fluorene	0.15[b]	b	b	b
Phenanthrene	0.68 ± 0.08	62.1	62.6	57.6
Anthracene	0.14 ± 0.07	65.7	72.9	65.7
Fluoranthene	1.25 ± 0.10	65.9	73.6	66.7
Pyrene	0.94 ± 0.12	75.7	86.8	77.9
Benzo(a)anthracene	0.53 ± 0.05	128	141	133
Chrysene	0.65 ± 0.08	52.9	63.4	52.6
Benzo(b)fluoranthene	0.70 ± 0.15	52.3	54.5	51.5
Benzo(k)fluoranthene	0.36 ± 0.05			
Benzo(a)pyrene	0.65 ± 0.08	42.2	44.6	46.8
Indeno(1,2,3-cd)pyrene	0.51 ± 0.15	83.9	111	100
Dibenzo(ah)anthracene	0.12 ± 0.05	c	c	c
Benzo(ghi)perylene	0.58 ± 0.22	52.8	82.4	55.9
Spikes				
Anthracene-d_{10}	1.0	75.2	72.4	60.6
Fluoranthene-d_{10}	1.0	77.4	87.0	80.2
Benzo(a)anthracene-d_{12}	1.0	140	158	145

[a] Single determination. The sample size was 5 g; the solvent volume was 30 mL. The extract was concentrated 30-fold prior to GC/MS analysis.

[b] Upper limit; the amount present is not greater than 0.15 mg/kg. Therefore the percent recovery could not be calculated.

[c] Not detected; the approximate detection limit was 0.1 mg/kg.

TABLE A-8. PERCENT RECOVERIES OF "NATIVE" AND SPIKED COMPOUNDS FROM THE HS-4 MARINE SEDIMENT WITH HEXANE-ACETONE (1:1) USING MAE (TEMPERATURE 145°C; PRESSURE 150 PSI)[a]

Compound name	Certified value (mg/kg)	Percent recovery		
		5 min	10 min	20 min
"Native" compounds				
Naphthalene	0.15[b]	b	b	b
Acenaphthylene	0.15[b]	b	b	b
Acenaphthene	0.15[b]	b	b	b
Fluorene	0.15[b]	b	b	b
Phenanthrene	0.68 ± 0.08	74.7	50.0	50.0
Anthracene	0.14 ± 0.07	85.7	55.7	55.7
Fluoranthene	1.25 ± 0.10	66.1	52.6	52.6
Pyrene	0.94 ± 0.12	82.3	63.6	63.6
Benzo(a)anthracene	0.53 ± 0.05	134	109	109
Chrysene	0.65 ± 0.08	55.7	40.9	40.9
Benzo(b)fluoranthene	0.70 ± 0.15	50.4	42.8	42.8
Benzo(k)fluoranthene	0.36 ± 0.05			
Benzo(a)pyrene	0.65 ± 0.08	44.3	46.2	65.8
Indeno(1,2,3-cd)pyrene	0.51 ± 0.15	80.4	83.9	72.9
Dibenzo(ah)anthracene	0.12 ± 0.05	c	c	c
Benzo(ghi)perylene	0.58 ± 0.22	52.4	38.6	50.0
Spikes				
Anthracene-d_{10}	1.0	71.2	56.4	72.0
Fluoranthene-d_{10}	1.0	79.2	65.4	69.4
Benzo(a)anthracene-d_{12}	1.0	141	113	130

[a] Single determination. The sample size was 5 g; the solvent volume was 30 mL. The extract was concentrated 30-fold prior to GC/MS analysis.

[b] Upper limit; the amount present is not greater than 0.15 mg/kg. Therefore the percent recovery could not be calculated.

[c] Not detected; the approximate detection limit was 0.1 mg/kg.

TABLE A-9. PERCENT RECOVERIES OF "NATIVE" AND SPIKED COMPOUNDS FROM THE HS-5 MARINE SEDIMENT WITH HEXANE-ACETONE (1:1) AT ROOM TEMPERATURE[a]

Compound name	Certified value (mg/kg)	Percent recovery		
		5 min	10 min	20 min
"Native" compounds				
Naphthalene	0.25 ± 0.07	28.8	33.6	31.2
Acenaphthylene	0.15[b]	b	b	b
Acenaphthene	0.23 ± 0.10	13.0	16.5	13.0
Fluorene	0.4 ± 0.10	19.5	22.5	21.5
Phenanthrene	5.2 ± 1.0	39.4	46.1	46.0
Anthracene	0.38 ± 0.15	48.4	46.8	45.8
Fluoranthene	8.4 ± 2.6	40.2	47.8	48.4
Pyrene	5.8 ± 1.8	39.4	44.7	45.7
Benzo(a)anthracene	2.9 ± 1.2	41.2	47.9	52.9
Chrysene	2.8 ± 0.9	32.3	41.3	38.0
Benzo(b)fluoranthene	2.0 ± 1.0	21.8	22.3	31.7
Benzo(k)fluoranthene	1.0 ± 0.4			
Benzo(a)pyrene	1.7 ± 0.8	22.9	22.4	28.8
Indeno(1,2,3-cd)pyrene	1.3 ± 0.3	28.9	48.6	36.2
Dibenzo(ah)anthracene	0.2 ± 0.1	c	c	c
Benzo(ghi)perylene	1.3 ± 0.7	24.8	32.3	39.2
Spikes				
Anthracene-d_{10}	5.0	50.2	55.6	53.4
Fluoranthene-d_{10}	5.0	54.2	67.1	63.7
Benzo(a)anthracene-d_{12}	5.0	94.6	112	109

[a] Single determination. The sample size was 5 g; the solvent volume was 30 mL. The extract was concentrated 30-fold prior to GC/MS analysis.

[b] Upper limit; the amount present is not greater than 0.15 mg/kg. Therefore the percent recovery could not be calculated.

[c] Not detected; the approximate detection limit was 0.1 mg/kg.

TABLE A-10. PERCENT RECOVERIES OF "NATIVE" AND SPIKED COMPOUNDS FROM THE HS-5 MARINE SEDIMENT WITH HEXANE-ACETONE (1:1) USING MAE (TEMPERATURE 80°C; PRESSURE 22 PSI)[a]

Compound name	Certified value (mg/kg)	Percent recovery		
		5 min	10 min	20 min
"Native" compounds				
Naphthalene	0.25 ± 0.07	53.6	45.6	419[b]
Acenaphthylene	0.15[c]	c	c	c
Acenaphthene	0.23 ± 0.10	13.9	16.5	14.8
Fluorene	0.4 ± 0.10	29.5	29.5	32.0
Phenanthrene	5.2 ± 1.0	56.4	60.6	58.5
Anthracene	0.38 ± 0.15	46.3	60.0	50.0
Fluoranthene	8.4 ± 2.6	61.5	68.5	70.5
Pyrene	5.8 ± 1.8	56.8	59.4	61.6
Benzo(a)anthracene	2.9 ± 1.2	71.4	64.1	69.9
Chrysene	2.8 ± 0.9	36.9	46.9	37.3
Benzo(b)fluoranthene	2.0 ± 1.0	43.1	39.5	41.3
Benzo(k)fluoranthene	1.0 ± 0.4			
Benzo(a)pyrene	1.7 ± 0.8	27.3	28.9	29.5
Indeno(1,2,3-cd)pyrene	1.3 ± 0.3	51.2	40.6	46.0
Dibenzo(ah)anthracene	0.2 ± 0.1	d	d	d
Benzo(ghi)perylene	1.3 ± 0.7	37.4	43.8	38.3
Spikes				
Anthracene-d_{10}	5.0	55.3	58.0	57.7
Fluoranthene-d_{10}	5.0	68.1	71.3	73.3
Benzo(a)anthracene-d_{12}	5.0	130	126	134

[a] Single determination. The sample size was 5 g; the solvent volume was 30 mL. The extract was concentrated 30-fold prior to GC/MS analysis.

[b] Cannot explain high recovery.

[c] Upper limit; the amount is not greater than 0.15 mg/kg. Therefore the percent recovery could not be calculated.

[d] Not detected; the approximate detection limit was 0.1 mg/kg.

TABLE A-11. PERCENT RECOVERIES OF "NATIVE" AND SPIKED COMPOUNDS FROM THE HS-5 MARINE SEDIMENT WITH HEXANE-ACETONE (1:1) USING MAE (TEMPERATURE 115°C; PRESSURE 72 PSI)[a]

Compound name	Certified value (mg/kg)	Percent recovery		
		5 min	10 min	20 min
"Native" compounds				
Naphthalene	0.25 ± 0.07	416[b]	61.6	67.2
Acenaphthylene	0.15[c]	c	c	c
Acenaphthene	0.23 ± 0.10	20.0	18.3	20.0
Fluorene	0.4 ± 0.10	30.0	32.5	31.0
Phenanthrene	5.2 ± 1.0	63.7	61.3	65.0
Anthracene	0.38 ± 0.15	52.6	65.8	70.0
Fluoranthene	8.4 ± 2.6	74.3	69.8	78.3
Pyrene	5.8 ± 1.8	63.5	65.1	68.2
Benzo(a)anthracene	2.9 ± 1.2	72.7	77.3	76.6
Chrysene	2.8 ± 0.9	40.2	48.4	45.1
Benzo(b)fluoranthene	2.0 ± 1.0	42.8	41.8	43.6
Benzo(k)fluoranthene	1.0 ± 0.4			
Benzo(a)pyrene	1.7 ± 0.8	30.1	22.4	31.6
Indeno(1,2,3-cd)pyrene	1.3 ± 0.3	55.1	50.8	49.2
Dibenzo(ah)anthracene	0.2 ± 0.1	d	d	d
Benzo(ghi)perylene	1.3 ± 0.7	38.2	35.8	34.9
Spikes				
Anthracene-d_{10}	5.0	57.5	56.9	58.8
Fluoranthene-d_{10}	5.0	76.2	73.2	81.7
Benzo(a)anthracene-d_{12}	5.0	134	141	143

[a] Single determination. The sample size was 5 g; the solvent volume was 30 mL. The extract was concentrated 30-fold prior to GC/MS analysis.

[b] Cannot explain high recovery.

[c] Upper limit; the amount present is not greater than 0.15 mg/kg. Therefore the percent recovery could not be calculated.

[d] Not detected; the approximate detection limit was 0.1 mg/kg.

TABLE A-12. PERCENT RECOVERIES OF "NATIVE" AND SPIKED COMPOUNDS FROM THE HS-5 MARINE SEDIMENT WITH HEXANE-ACETONE (1:1) USING MAE (TEMPERATURE 145°C; PRESSURE 150 PSI)[a]

Compound name	Certified value (mg/kg)	Percent recovery		
		5 min	10 min	20 min
"Native" compounds				
Naphthalene	0.25 ± 0.07	76.8	522[b]	73.6
Acenaphthylene	0.15[c]	c	c	c
Acenaphthene	0.23 ± 0.10	19.1	15.7	22.6
Fluorene	0.4 ± 0.10	32.0	31.0	33.0
Phenanthrene	5.2 ± 1.0	59.8	64.0	67.8
Anthracene	0.38 ± 0.15	66.8	62.1	63.2
Fluoranthene	8.4 ± 2.6	69.3	70.5	73.0
Pyrene	5.8 ± 1.8	62.5	65.4	69.6
Benzo(a)anthracene	2.9 ± 1.2	71.2	83.7	85.2
Chrysene	2.8 ± 0.9	38.5	38.1	42.6
Benzo(b)fluoranthene	2.0 ± 1.0	40.9	45.9	43.6
Benzo(k)fluoranthene	1.0 ± 0.4			
Benzo(a)pyrene	1.7 ± 0.8	33.6	37.4	22.2
Indeno(1,2,3-cd)pyrene	1.3 ± 0.3	50.8	59.2	63.1
Dibenzo(ah)anthracene	0.2 ± 0.1	d	d	d
Benzo(ghi)perylene	1.3 ± 0.7	29.7	45.1	39.1
Spikes				
Anthracene-d_{10}	5.0	53.6	56.4	60.0
Fluoranthene-d_{10}	5.0	69.3	70.6	74.0
Benzo(a)anthracene-d_{12}	5.0	130	133	154

[a] Single determination. The sample size was 5 g; the solvent volume was 30 mL. The extract was concentrated 30-fold prior to GC/MS analysis.

[b] Cannot explain high recovery.

[c] Upper limit; the amount present is not greater than 0.15 mg/kg. Therefore the percent recovery could not be calculated.

[d] Not detected; the approximate detection limit was 0.1 mg/kg.

TABLE A-13. PERCENT RECOVERIES OF "NATIVE" AND SPIKED COMPOUNDS FROM THE NIST SRM1941 MARINE SEDIMENT WITH HEXANE-ACETONE (1:1) AT ROOM TEMPERATURE[a]

Compound name	Certified value (mg/kg)	Percent recovery		
		5 min	10 min	20 min
"Native" compounds				
Naphthalene[b]	1.322 ± 0.014	15.7	22.2	34.0
2-Methylnaphthalene[b]	0.406 ± 0.036	16.3	11.8	12.3
Acenaphthylene[b]	0.115 ± 0.010	76.5	64.3	69.6
Acenaphthene[b]	0.052 ± 0.002	57.7	42.3	42.3
Fluorene[b]	0.104 ± 0.005	65.4	46.2	44.2
Phenanthrene	0.577 ± 0.059	54.1	42.6	40.2
Anthracene	0.202 ± 0.042	85.1	51.5	92.1
Fluoranthene	1.22 ± 0.24	68.4	52.1	47.0
Pyrene	1.08 ± 0.20	50.0	38.7	31.1
Benzo(a)anthracene	0.55 ± 0.079	62.5	46.2	36.7
Chrysene[b]	0.702 ± 0.016	61.0	55.6	55.3
Benzo(b)fluoranthene	0.78 ± 0.19	85.7	67.4	68.0
Benzo(k)fluoranthene	0.444 ± 0.040			
Benzo(a)pyrene	0.67 ± 0.13	51.6	36.7	37.0
Indeno(1,2,3-cd)pyrene	0.569 ± 0.040	59.8	54.5	51.0
Benzo(ghi)perylene	0.516 ± 0.083	73.6	48.8	53.9
Spikes				
Anthracene-d_{10}	0.6	117	101	98.0
Fluoranthene-d_{10}	0.6	90.3	51.7	74.0
Benzo(a)anthracene-d_{12}	0.6	73.3	42.3	56.3

[a] Single determination. The sample size was 5 g; the solvent volume was 30 mL. The extract was concentrated 30-fold prior to GC/MS analysis.

[b] The concentration reported for this compound is not certified by NIST.

TABLE A-14. PERCENT RECOVERIES OF "NATIVE" AND SPIKED COMPOUNDS FROM THE NIST SRM1941 MARINE SEDIMENT WITH HEXANE-ACETONE (1:1) USING MAE (TEMPERATURE 80°C; PRESSURE 22 PSI)[a]

Compound name	Certified value (mg/kg)	Percent recovery		
		5 min	10 min	20 min
"Native" compounds				
Naphthalene[b]	1.322 ± 0.014	23.9	24.1	162[c]
2-Methylnaphthalene[b]	0.406 ± 0.036	22.2	25.1	36.5
Acenaphthylene[b]	0.115 ± 0.010	83.5	76.5	67.8
Acenaphthene[b]	0.052 ± 0.002	53.8	76.9	69.2
Fluorene[b]	0.104 ± 0.005	73.1	78.8	63.5
Phenanthrene	0.577 ± 0.059	70.7	76.9	76.6
Anthracene	0.202 ± 0.042	90.1	92.1	98.0
Fluoranthene	1.22 ± 0.24	76.7	71.0	80.2
Pyrene	1.08 ± 0.20	51.3	45.7	50.0
Benzo(a)anthracene	0.55 ± 0.079	68.7	74.5	85.1
Chrysene[b]	0.702 ± 0.016	82.1	63.8	85.5
Benzo(b)fluoranthene	0.78 ± 0.19	82.7	78.1	89.3
Benzo(k)fluoranthene	0.444 ± 0.049			
Benzo(a)pyrene	0.67 ± 0.13	50.4	49.9	52.8
Indeno(1,2,3-cd)pyrene	0.569 ± 0.040	65.4	63.3	68.5
Benzo(ghi)perylene	0.516 ± 0.083	74.4	75.2	85.7
Spikes				
Anthracene-d_{10}	0.6	103	102	105
Fluoranthene-d_{10}	0.6	95.7	70.7	101
Benzo(a)anthracene-d_{12}	0.6	98.7	77.7	99.3

[a] Single determination. The sample size was 5 g; the solvent volume was 30 mL. The extract was concentrated 30-fold prior to GC/MS analysis.
[b] The concentration reported for this compound is not certified by NIST.
[c] Cannot explain high recovery.

TABLE A-15. PERCENT RECOVERIES OF "NATIVE" AND SPIKED COMPOUNDS FROM THE NIST SRM1941 MARINE SEDIMENT WITH HEXANE-ACETONE (1:1) USING MAE (TEMPERATURE 115°C; PRESSURE 72 PSI)[a]

Compound name	Certified value (mg/kg)	Percent recovery		
		5 min	10 min	20 min
"Native" compounds				
Naphthalene[b]	1.322 ± 0.014	38.0	345[b]	488[b]
2-Methylnaphthalene[b]	0.406 ± 0.036	39.9	62.6	78.3
Acenaphthylene[b]	0.115 ± 0.010	88.7	85.2	85.2
Acenaphthene[b]	0.052 ± 0.002	80.8	80.8	88.5
Fluorene[b]	0.104 ± 0.005	69.2	53.8	57.7
Phenanthrene	0.577 ± 0.059	91.9	85.6	95.7
Anthracene	0.202 ± 0.042	109	92.1	120
Fluoranthene	1.22 ± 0.24	76.9	84.6	93.0
Pyrene	1.08 ± 0.20	52.4	55.9	62.4
Benzo(a)anthracene	0.55 ± 0.079	82.9	68.4	76.7
Chrysene[b]	0.702 ± 0.016	71.5	64.7	66.4
Benzo(b)fluoranthene	0.78 ± 0.19	80.0	80.9	91.1
Benzo(k)fluoranthene	0.444 ± 0.049			
Benzo(a)pyrene	0.67 ± 0.13	54.3	59.1	62.7
Indeno(1,2,3-cd)pyrene	0.569 ± 0.040	69.2	69.9	74.2
Benzo(ghi)perylene	0.516 ± 0.083	93.0	88.0	93.0
Spikes				
Anthracene-d_{10}	0.6	112	100	103
Fluoranthene-d_{10}	0.6	79.0	85.0	95.3
Benzo(a)anthracene-d_{12}	0.6	64.0	61.3	64.0

[a] Single determination. The sample size was 5 g; the solvent volume was 30 mL. The extract was concentrated 30-fold prior to GC/MS analysis.
[b] The concentration reported for this compound is not certified by NIST.
[c] Cannot explain high recovery.

TABLE A-16. PERCENT RECOVERIES OF "NATIVE" AND SPIKED COMPOUNDS FROM THE NIST SRM1941 MARINE SEDIMENT WITH HEXANE-ACETONE (1:1) USING MAE (TEMPERATURE 145°C; PRESSURE 150 PSI)[a]

Compound name	Certified value (mg/kg)	Percent recovery		
		5 min	10 min	20 min
"Native" compounds				
Naphthalene[b]	1.322 ± 0.014	52.8	55.1	58.2
2-Methylnaphthalene[b]	0.406 ± 0.036	62.6	69.0	72.9
Acenaphthylene[b]	0.115 ± 0.010	71.3	110	73.0
Acenaphthene[b]	0.052 ± 0.002	96.2	96.2	115
Fluorene[b]	0.104 ± 0.005	112	137	84.6
Phenanthrene	0.577 ± 0.059	108	114	117
Anthracene	0.202 ± 0.042	123	128	137
Fluoranthene	1.22 ± 0.24	80.2	96.1	70.7
Pyrene	1.08 ± 0.20	63.3	60.4	49.8
Benzo(a)anthracene	0.55 ± 0.079	62.2	62.5	64.4
Chrysene[b]	0.702 ± 0.016	64.1	58.7	76.1
Benzo(b)fluoranthene	0.78 ± 0.19	88.1	87.9	86.3
Benzo(k)fluoranthene	0.444 ± 0.049			
Benzo(a)pyrene	0.67 ± 0.13	60.0	62.4	63.9
Indeno(1,2,3-cd)pyrene	0.569 ± 0.040	74.5	90.7	123
Benzo(ghi)perylene	0.516 ± 0.083	92.2	114	193
Spikes				
Anthracene-d_{10}	0.6	96.7	100	99.7
Fluoranthene-d_{10}	0.6	84.0	85.7	79.3
Benzo(a)anthracene-d_{12}	0.6	65.7	58.7	68.3

[a] Single determination. The sample size was 5 g; the solvent volume was 30 mL. The extract was concentrated 30-fold prior to GC/MS analysis.

[b] The concentration reported for this compound is not certified by NIST.

TABLE A-17. PERCENT RECOVERIES OF "NATIVE" COMPOUNDS FROM THE SRS103-100 SOIL WITH HEXANE-ACETONE (1:1) AT ROOM TEMPERATURE[a]

Compound name	Certified value (mg/kg)	Percent recovery		
		5 min	10 min	20 min
Naphthalene[b]	23.6 ± 28.1	64.6	64.1	75.8
2-Methylnaphthalene[b]	56.7 ± 21.0	54.0	56.3	59.0
Acenaphthylene[b]	16.3 ± 11.1	73.6	76.6	86.9
Acenaphthene	591 ± 104	59.1	54.9	63.8
Dibenzofuran	306 ± 74.8	67.9	61.1	75.2
Fluorene	476 ± 101	66.2	54.8	71.7
Pentachlorophenol[b]	884 ± 692	60.5	59.5	68.7
Phenanthrene	1,450 ± 570	91.7	86.1	101
Anthracene	425 ± 67.5	71.2	72.2	74.0
Fluoranthene	1,307 ± 396	63.9	62.1	74.6
Pyrene	961 ± 428	81.1	74.7	94.3
Benzo(a)anthracene	249 ± 56.8	65.7	67.1	82.5
Chrysene	310 ± 62.9	68.0	57.6	67.4
Benzo(b+k)fluoranthene	156 ± 40.1	48.8	48.8	59.6
Benzo(a)pyrene	97.5 ± 26.6	48.0	45.5	58.5

[a] Single determination. The sample size was 5 g; the solvent volume was 30 mL. The extract was diluted 10-fold prior to GC/MS.

[b] The extract was diluted twofold prior to GC/MS analysis.

TABLE A-18. PERCENT RECOVERIES OF "NATIVE" COMPOUNDS FROM THE SRS103-100 SOIL WITH HEXANE-ACETONE (1:1) USING MAE (TEMPERATURE 80°C; PRESSURE 22 PSI)[a]

Compound name	Certified value (mg/kg)	Percent recovery		
		5 min	10 min	20 min
Naphthalene[b]	23.6 ± 28.1	116	133	152
2-Methylnaphthalene[b]	56.7 ± 21.0	82.3	90.8	100
Acenaphthylene[b]	16.3 ± 11.1	101	107	123
Acenaphthene	591 ± 104	84.0	94.2	98.3
Dibenzofuran	306 ± 74.8	82.5	91.3	96.4
Fluorene	476 ± 101	83.0	92.7	96.5
Pentachlorophenol[b]	884 ± 692	40.3	70.5	73.1
Phenanthrene	1,450 ± 570	106	118	125
Anthracene	425 ± 67.5	92.1	106	110
Fluoranthene	1,307 ± 396	82.2	91.0	100
Pyrene	961 ± 428	85.0	95.1	103
Benzo(a)anthracene	249 ± 56.8	69.8	76.7	83.0
Chrysene	310 ± 62.9	82.1	90.4	92.6
Benzo(b+k)fluoranthene	156 ± 40.1	82.1	86.3	92.1
Benzo(a)pyrene	97.5 ± 26.6	72.6	75.7	86.8

[a] Single determination. The sample size was 5 g; the solvent volume was 30 mL. The extract was diluted 10-fold prior to GC/MS analysis.

[b] The extract was diluted twofold prior to GC/MS analysis.

TABLE A-19. PERCENT RECOVERIES OF "NATIVE" COMPOUNDS FROM THE SRS103-100 SOIL WITH HEXANE-ACETONE (1:1) USING MAE (TEMPERATURE 115°C; PRESSURE 72 PSI)[a]

Compound name	Certified value (mg/kg)	Percent recovery		
		5 min	10 min	20 min
Naphthalene[b]	23.6 ± 28.1	132	136	146
2-Methylnaphthalene[b]	56.7 ± 21.0	89.3	94.4	91.4
Acenaphthylene[b]	16.3 ± 11.1	111	119	107
Acenaphthene	591 ± 104	94.6	94.1	93.8
Dibenzofuran	306 ± 74.8	91.5	91.1	93.8
Fluorene	476 ± 101	86.9	92.9	92.7
Pentachlorophenol[b]	884 ± 692	76.0	97.1	95.5
Phenanthrene	1,450 ± 570	122	124	122
Anthracene	425 ± 67.5	104	106	101
Fluoranthene	1,307 ± 396	94.5	101	94.6
Pyrene	961 ± 428	95.7	102	97.1
Benzo(a)anthracene	249 ± 56.8	83.7	84.2	84.9
Chrysene	310 ± 62.9	85.0	89.3	86.8
Benzo(b+k)fluoranthene	156 ± 40.1	88.6	90.9	89.2
Benzo(a)pyrene	97.5 ± 26.6	75.1	81.2	80.0

[a] Single determination. The sample size was 5 g; the solvent volume was 30 mL. The extract was diluted 10-fold prior to GC/MS analysis.

[b] The extract was diluted twofold prior to GC/MS analysis.

TABLE A-20. PERCENT RECOVERIES OF "NATIVE" COMPOUNDS FROM THE SRS103-100 SOIL WITH HEXANE-ACETONE (1:1) USING MAE (TEMPERATURE 145°C; PRESSURE 150 PSI)[a]

Compound name	Certified value (mg/kg)	Percent recovery		
		5 min	10 min	20 min
Naphthalene[b]	23.6 ± 28.1	118	162	166
2-Methylnaphthalene[b]	56.7 ± 21.0	75.3	92.5	96.5
Acenaphthylene[b]	16.3 ± 11.1	95.0	123	113
Acenaphthene	591 ± 104	94.7	88.2	95.2
Dibenzofuran	306 ± 74.8	93.5	92.5	94.6
Fluorene	476 ± 101	93.5	91.5	90.2
Pentachlorophenol[b]	884 ± 692	74.4	81.5	89.7
Phenanthrene	1,450 ± 570	123	122	126
Anthracene	425 ± 67.5	102	102	98
Fluoranthene	1,307 ± 396	92.9	92.9	95.7
Pyrene	961 ± 428	96.4	95.6	102
Benzo(a)anthracene	249 ± 56.8	82.5	79.6	82.0
Chrysene	310 ± 62.9	84.3	89.3	92.0
Benzo(b+k)fluoranthene	156 ± 40.1	85.9	86.7	92.1
Benzo(a)pyrene	97.5 ± 26.6	75.1	75.1	79.4

[a] Single determination. The sample size was 5 g; the solvent volume was 30 mL. The extract was diluted 10-fold prior to GC/MS analysis.

[b] The extract was diluted twofold prior to GC/MS analysis.

TABLE A-21. PERCENT RECOVERIES OF "NATIVE" AND SPIKED COMPOUNDS FROM THE ERA SOIL (LOT NO. 321) WITH HEXANE-ACETONE (1:1) AT ROOM TEMPERATURE[a]

Compound name	Certified value (mg/kg)	Percent recovery		
		5 min	10 min	20 min
"Native" compounds				
Naphthalene	2.96	58.6	50.5	46.4
Dibenzofuran	1.70	67.4	59.9	53.8
Pentachlorophenol	6.68	36.3	34.1	35.3
Anthracene	3.52	44.0	41.6	39.6
Fluoranthene	8.09	65.2	62.7	61.1
Pyrene	3.78	48.7	48.5	44.6
Chrysene	4.47	70.7	65.5	61.6
Benzo(b)fluoranthene	2.03	44.6	43.4	47.6
1,2-Dichlorobenzene	10.0	33.4	30.5	25.5
2-Methylphenol	5.46	20.3	19.2	16.7
N-Nitroso-di-n-propylamine	5.01	93.7	89.2	79.7
Nitrobenzene	7.87	90.2	87.9	74.7
2,4-Dichlorophenol	5.52	65.0	64.0	57.8
1,2,4-Trichlorobenzene	9.36	52.5	49.4	43.7
2,4,6-Trichlorophenol	2.82	59.1	58.2	48.6
2,4-Dinitrotoluene	4.86	139	123	112
Carbazole	5.00	79.4	74.8	65.6
Di-n-butyl-phthalate	3.43	129	121	112
Bis(2-ethylhexyl)phthalate	7.62	53.5	51.4	54.9
Spikes				
Anthracene-d_{10}	5.00	87.6	86.4	89.2
Fluoranthene-d_{10}	5.00	98.8	89.0	105
Benzo(a)anthracene-d_{12}	5.00	99.2	94.5	103

[a] Single determination. The sample size was 5 g; the solvent volume was 30 mL. The extract was concentrated 30-fold prior to GC/MS analysis.

TABLE A-22. PERCENT RECOVERIES OF "NATIVE" AND SPIKED COMPOUNDS FROM THE ERA SOIL (LOT NO. 321) WITH HEXANE-ACETONE (1:1) USING MAE (TEMPERATURE 80°C; PRESSURE 22 PSI)[a]

Compound name	Certified value (mg/kg)	Percent recovery		
		5 min	10 min	20 min
"Native" compounds				
Naphthalene	2.96	53.9	56.8	64.9
Dibenzofuran	1.70	71.4	74.1	80.7
Pentachlorophenol	6.68	47.6	45.7	56.8
Anthracene	3.52	49.3	48.9	54.5
Fluoranthene	8.09	70.2	72.3	83.5
Pyrene	3.78	55.6	55.6	66.7
Chrysene	4.47	66.0	69.3	83.7
Benzo(b)fluoranthene	2.03	50.0	51.0	62.1
1,2-Dichlorobenzene	10.0	31.3	33.8	32.4
2-Methylphenol	5.46	20.7	21.1	23.2
N-Nitroso-di-n-propylamine	5.01	78.0	81.9	84.3
Nitrobenzene	7.87	79.4	83.7	84.3
2,4-Dichlorophenol	5.52	78.7	80.9	79.6
1,2,4-Trichlorobenzene	9.36	53.0	54.6	55.7
2,4,6-Trichlorophenol	2.82	71.1	70.8	82.4
2,4-Dinitrotoluene	4.86	123	122	140
Carbazole	5.00	87.6	95.3	107
Di-n-butyl-phthalate	3.43	113	117	141
Bis(2-ethylhexyl)phthalate	7.62	59.7	62.2	73.2
Spikes				
Anthracene-d_{10}	5.00	86.2	82.3	84.4
Fluoranthene-d_{10}	5.00	95.2	91.3	97.1
Benzo(a)anthracene-d_{12}	5.00	98.2	91.6	97.7

[a] Single determination. The sample size was 5 g; the solvent volume was 30 mL. The extract was concentrated 30-fold prior to GC/MS analysis.

TABLE A-23. PERCENT RECOVERIES OF "NATIVE" AND SPIKED COMPOUNDS FROM THE ERA SOIL (LOT NO. 321) WITH HEXANE-ACETONE (1:1) USING MAE (TEMPERATURE 115°C; PRESSURE 72 PSI)[a]

Compound name	Certified value (mg/kg)	Percent recovery		
		5 min	10 min	20 min
"Native" compounds				
Naphthalene	2.96	71.4	105	113
Dibenzofuran	1.70	91.6	82.2	84.4
Pentachlorophenol	6.68	52.5	67.5	76.6
Anthracene	3.52	64.5	61.3	64.8
Fluoranthene	8.09	102	89.3	96.6
Pyrene	3.78	81.2	78.8	79.4
Chrysene	4.47	106	87.2	100
Benzo(b)fluoranthene	2.03	74.7	68.9	73.4
1,2-Dichlorobenzene	10.0	37.6	32.7	33.4
2-Methylphenol	5.46	25.4	17.9	23.8
N-Nitroso-di-n-propylamine	5.01	98.7	80.7	85.6
Nitrobenzene	7.87	104	82.6	88.6
2,4-Dichlorophenol	5.52	112	87.1	93.2
1,2,4-Trichlorobenzene	9.36	67.0	55.7	59.4
2,4,6-Trichlorophenol	2.82	94.8	90.9	100
2,4-Dinitrotoluene	4.86	143	142	144
Carbazole	5.00	136	113	120
Di-n-butyl-phthalate	3.43	166	125	145
Bis(2-ethylhexyl)phthalate	7.62	92.4	79.1	88.6
Spikes				
Anthracene-d_{10}	5.00	83.9	87.9	88.4
Fluoranthene-d_{10}	5.00	92.6	98.0	101
Benzo(a)anthracene-d_{12}	5.00	98.2	96.8	96.6

[a] Single determination. The sample size was 5 g; the solvent volume was 30 mL. The extract was concentrated 30-fold prior to GC/MS analysis.

TABLE A-24. PERCENT RECOVERIES OF "NATIVE" AND SPIKED COMPOUNDS FROM THE ERA SOIL (LOT NO. 321) WITH HEXANE-ACETONE (1:1) USING MAE (TEMPERATURE 145°C; PRESSURE 150 PSI)[a]

Compound name	Certified value (mg/kg)	Percent recovery		
		5 min	10 min	20 min
"Native" compounds				
Naphthalene	2.96	160	69.3	66.8
Dibenzofuran	1.70	83.6	92.7	81.3
Pentachlorophenol	6.68	76.8	83.6	76.0
Anthracene	3.52	69.5	78.9	63.6
Fluoranthene	8.09	91.1	102	89.4
Pyrene	3.78	78.3	92.1	79.7
Chrysene	4.47	89.7	104	84.3
Benzo(b)fluoranthene	2.03	74.8	80.9	68.8
1,2-Dichlorobenzene	10.0	29.6	32.3	27.6
2-Methylphenol	5.46	24.5	28.0	20.6
N-Nitroso-di-n-propylamine	5.01	85.9	85.7	74.9
Nitrobenzene	7.87	96.3	98.2	83.4
2,4-Dichlorophenol	5.52	96.4	103	85.7
1,2,4-Trichlorobenzene	9.36	54.1	61.9	52.5
2,4,6-Trichlorophenol	2.82	109	129	91.1
2,4-Dinitrotoluene	4.86	140	159	125
Carbazole	5.00	125	142	118
Di-n-butyl-phthalate	3.43	134	146	130
Bis(2-ethylhexyl)phthalate	7.62	85.7	89.8	76.7
Spikes				
Anthracene-d_{10}	5.00	96.0	93.8	85.7
Fluoranthene-d_{10}	5.00	104	100	93.1
Benzo(a)anthracene-d_{12}	5.00	99.6	101	92.2

[a] Single determination. The sample size was 5 g; the solvent volume was 30 mL. The extract was concentrated 30-fold prior to GC/MS analysis.