EPA U.S. Environmental Protection Agency
Office of Research and Development

Industrial Environmental Research
Laboratory
Research Triangle Park, North Carolina 27711

EPA-600/7-78-039
March 1978

REGENERATION OF CALCIUM-BASED SO_2 SORBENTS FOR FLUIDIZED-BED COMBUSTION: ENGINEERING EVALUATION

Interagency
Energy-Environment
Research and Development
Program Report

RESEARCH REPORTING SERIES

Research reports of the Office of Research and Development, U.S. Environmental Protection Agency, have been grouped into nine series. These nine broad categories were established to facilitate further development and application of environmental technology. Elimination of traditional grouping was consciously planned to foster technology transfer and a maximum interface in related fields. The nine series are:

1. Environmental Health Effects Research
2. Environmental Protection Technology
3. Ecological Research
4. Environmental Monitoring
5. Socioeconomic Environmental Studies
6. Scientific and Technical Assessment Reports (STAR)
7. Interagency Energy-Environment Research and Development
8. "Special" Reports
9. Miscellaneous Reports

This report has been assigned to the INTERAGENCY ENERGY-ENVIRONMENT RESEARCH AND DEVELOPMENT series. Reports in this series result from the effort funded under the 17-agency Federal Energy/Environment Research and Development Program. These studies relate to EPA's mission to protect the public health and welfare from adverse effects of pollutants associated with energy systems. The goal of the Program is to assure the rapid development of domestic energy supplies in an environmentally-compatible manner by providing the necessary environmental data and control technology. Investigations include analyses of the transport of energy-related pollutants and their health and ecological effects; assessments of, and development of, control technologies for energy systems; and integrated assessments of a wide range of energy-related environmental issues.

EPA REVIEW NOTICE

This report has been reviewed by the participating Federal Agencies, and approved for publication. Approval does not signify that the contents necessarily reflect the views and policies of the Government, nor does mention of trade names or commercial products constitute endorsement or recommendation for use.

This document is available to the public through the National Technical Information Service, Springfield, Virginia 22161.

EPA-600/7-78-039
March 1978

REGENERATION OF CALCIUM-BASED SO_2 SORBENTS FOR FLUIDIZED-BED COMBUSTION: ENGINEERING EVALUATION

by

R. A. Newby, S. Katta, and D. L. Keairns

Westinghouse Research and Development Center
1310 Beulah Road
Pittsburgh, Pennsylvania 15235

Contract No. 68-02-2132
Program Element No. EHE623A

EPA Project Officer: D. Bruce Henschel

Industrial Environmental Research Laboratory
Office of Energy, Minerals and Industry
Research Triangle Park, N.C. 27711

Prepared for

U.S. ENVIRONMENTAL PROTECTION AGENCY
Office of Research and Development
Washington, D.C. 20460

PREFACE

The Westinghouse R&D Center is carrying out a program to provide experimental and engineering support for the development of fluidized-bed combustion systems under contract to the Industrial Environmental Research Laboratory, U. S. Environmental Protection Agency (EPA), at Research Triangle Park, NC. The contract scope includes atmospheric and pressurized fluidized-bed combustion processes as they may be applied for steam generation, electric power generation, or process heat. Specific tasks include work on calcium-based sulfur removal system studies (e.g., sorption kinetics, regeneration, attrition, modeling), alternative sulfur sorbents, nitrogen oxide emissions, particulate emissions and control, trace element emissions and control spent sorbent and ash disposal, and system evaluation (e.g., the impact of new source performance standards on fluidized-bed combustion system design and cost).

The report contains the results of work, defined and completed under the environmental control task using calcium-based sorbents that was carried out from December 1975 to January 1977. Results from work carried out by Westinghouse or reported by other investigators after January 1977 are not assimilated into this task report. The work reported represents an extension of prior work completed by Westinghouse under contract to EPA. Results from this prior work on fluidized-bed combustion include:

- Assimilation of available data on fluidized-bed combustion, including sulfur dioxide removal, sorbent regeneration, sorbent attrition, nitrogen oxide minimization, combustion efficiency, heat transfer, particle carry-over, boiler tube corrosion/erosion fouling, and gas-turbine erosion/corrosion deposition

- Assessment of markets for industrial boilers and utility power systems
- Development of designs for fluidized-bed industrial boilers
- Development of designs for fluidized-bed combustion utility power systems: atmospheric-pressure fluidized-bed combustion boiler-combined cycle power systems, adiabatic fluidized-bed combustion-combined cycle power systems--including first- and second-generation concepts
- Preparation of a preliminary design and cost estimate for a 30 MW (equivalent) pressurized fluidized-bed combustion boiler development plant
- Assessment of the sensitivity of operating and design parameters selected for the base power plant design on plant economics
- Collection of experimental data on sulfur removal and sorbent regeneration using limestone and dolomites
- Preparation of cost and performance estimates for once-through and regenerative sulfur removal systems
- Evaluation of alternative sulfur sorbents
- Collection and analysis of data on spent sorbent disposal--utilization and environmental impact of disposal
- Projection and analysis of trace emissions from fluidized-bed combustion systems
- Analysis of particulate removal requirements and development of a particulate control system for high-temperature, high-pressure fluidized-bed combustion systems
- Construction of a high-pressure/temperature particulate control test facility
- Development of plant operation and control procedures
- Construction of a corrosion/erosion test facility for the 0.63 MW Exxon miniplant
- Continued assessment of fluidized-bed combustion power plant cycles and component designs to evaluate environmental impact.

The results of these surveys, designs, evaluations, and experimental programs provide the basis for the work being carried out under the current contract. Seven are available that document the prior contract work*.

*See References 1, 12, 57, 62, 65, 66.

ABSTRACT

Projections of the economics of fluidized-bed combustion (FBC) power plants, operated with regeneration of calcium-based sorbents, have been developed on the basis of current estimates of sorbent regeneration process performance. Both Atmospheric-Pressure Fluidized-Bed Combustion (AFBC) and Pressurized Fluidized-Bed Combustion (PFBC) are considered. Coal-fueled reductive-decomposition is evaluated for AFBC, and three sorbent regeneration schemes are evaluated for PFBC (two reductive-decomposition schemes and a two-step regeneration process). Economic comparisons with FBC power plants operated with once-through sorbent systems and with conventional power plants using limestone wet-scrubbing are presented. The sulfur recovery process for regenerative FBC is identified as the dominant cost component of the regeneration process. Regenerative FBC performance requirements for economic feasibility are projected and critical development needs are discussed.

CONTENTS

		Page
1.	INTRODUCTION	1
2.	CONCLUSIONS	3
3.	RECOMMENDATIONS	8
4.	STATUS OF TECHNOLOGY	11
	Regeneration Reaction Schemes	11
	Experimental Status and Performance Projections	15
	Reductive Decomposition	15
	Two-Step Regeneration	17
	Commercial Performance Projections	17
	Sulfur Recovery from Regenerator Off-Gass	18
	Conclusions	18
	Fluidized-Bed Combustion Power Plant Sulfur Production Rates	19
	Recovery of Elemental Sulfur From H_2S Gas Streams	22
	Commercial Process Operating Factors	24
	Economics	26
	Recovery of Elemental Sulfur From SO_2 Gas Streams	29
	Economics	30
	Sulfuric Acid Production From SO_2 Gas Streams	32
	Assessment	34
	Carbon Dioxide Recovery	36
	Conclusions	36
	Rate of Carbon Dioxide Consumption	38
	Commercial CO_2 Recovery Options	40
	Economics of Carbon Dioxide Recovery	40
	Sorbent Circulation	45
	Sorbent Circulation System Requirements	45
	Techniques for Transporting Solids	50
	Plant and Transport System Layouts	53
	Evaluation of Transport Techniques	57
	Sorbent Circulation Rates	59
	Cost Projections	61
5.	REGENERATION FOR ATMOSPHERIC-PRESSURE FBC	64
	Process Description	64
	Heat and Material Balances	66
	Equipment Description	66
	Regeneration Element	69
	Sorbent Circulation Element	69
	Sulfur Recovery Element	69

CONTENTS (Cont'd)

	Page
Design Parameters	71
Regeneration Temperature and Pressure	72
Feed Location and Reducing Gas Composition	73
Process Options	74
Regenerator Vessel Location	75
Sorbent Size	76
Spent Sorbent Removal	78
Performance Projections	78
Ca/S Makeup Ratio	78
Thermal Efficiency	79
Environmental Impact	80
Reliability	80
Cost Estimate	81
Recycling of RESOX Tail-Gas to Boiler	88
Assessment	94
Conclusions	94
Development Requirements	95
Reliability	96
6. REGENERATION FOR PRESSURIZED FBC	97
Process Options	97
Evaluation Basis	97
Process Performance Projections	101
Capital Investment	104
Energy Cost	107
Economic Comparison with Limestone Wet-Scrubbing	108
Environmental Comparison	113
Assessment	113
7. NOMENCLATURE	116
Abbreviations	117
8. REFERENCES	118

APPENDICES

A. EFFECT OF VARIOUS FACTORS ON REGENERATOR SO_2 CONCENTRATION	125
Results	125
Conclusions and Recommendations	128
References	132

FIGURES

		Page
1.	Required Combustor Sulfur Removal Efficiency	21
2.	Sulfur Production Rate	23
3.	Capital Investment for Sulfur Recovery with Steam and CO_2 Regeneration Process	27
4.	Sulfur Production Cost for Steam and CO_2 Regeneration Process	28
5.	Capital Investment for Sulfur Recovery with One-Step Regeneration Process	31
6.	Sulfur Production Cost for One-Step Regeneration Process	33
7.	Concentrated Sulfuric Acid Production for One-Step Regeneration Product Gas	35
8.	Two-Step Regeneration Process Options	37
9.	Carbon Dioxide Consumption Rate	39
10.	Carbon Dioxide Absorption Process	41
11.	Carbon Dioxide Recovery Process Investment	43
12.	Carbon Dioxide Recovery Process Investment	44
13.	Power and Investment for Stack-Gas Compression for CO_2 Recovery	46
14.	Solids Transport Techniques	55
15.	Dense-Phase Solids Transport Techniques	56
16.	Sorbent Circulation Rate Projection	60
17.	Capital Investment for Sorbent Circulation System	63

FIGURES (Cont'd)

		Page
18.	Atmospheric One-Step Regenerative Process Flow Diagram	68
19.	Atmospheric One-Step Regeneration Schematic Flow Diagram of One Module	82
20.	Capital Cost of Regenerative Process as a Function of PSL	83
21.	Energy Cost of Regenerative Process as a Function of PSL	84
22.	Comparison between Cost of RESOX and Allied Chemical Processes as a Function of PSL	85
23.	Process Investment for Different Concentrations of SO_2 with Allied Chemical Process	89
24.	Cost of Sulfur Recovery and Regeneration Elements for Different % SO_2 with Allied Chemical Process	90
A1.	Equilibrium for 1/4 CaS + 3/4 $CaSO_4$ = CaO + SO_2 at 101 kPa	126
A2.	Effect of Heat Losses and Air Preheat Temperature on Concentration of SO_2 - Coal as Fuel	127
A3.	Effect of Heat Losses and Air Preheat Temperature on Concentration of SO_2 - Methane as Fuel	129
A4.	Effect of Change in Sorbent Utilization across Regenerator on Concentration of SO_2, Sorbent Circulation and Fuel Input	130
A5.	Effect of Heat Losses and Fuel Input on Concentration of SO_2	131

TABLES

		Page
1.	Summary of Equipment Recommended for Different Types of Study	10
2.	Summary of Sulfur Recovery Costs for Fluidized-Bed Combustion Sorbent Regeneration	20
3.	A List of CO_2 Recovery Processes	42
4.	Economic Projections for CO_2 Recovery from Stack Gas	47
5.	Required and Desired Characteristics	48
6.	Solids Transport Technologies	50
7.	Directional Capabilities of Transport Methods	54
8.	Comparison of Transport Technologies	58
9.	Design Specifications and Assumptions	67
10.	Heat and Material Balances	70
11.	Energy Cost	87
12.	Cost Sensitivity of Atmospheric Regenerative Process	91
13.	Energy Cost	92
14.	Energy Cost	92
15.	Energy Cost	93
16.	Process Options	98
17.	Power Plant Basis	99
18.	Process Sulfur Load	100

TABLES (Cont'd)

		Page
19.	Selection of Process Options	101
20.	Operating Conditions and Performance Projections	102
21.	Performance Projections	103
22.	Investment for Pressurized Reductive Decomposition Process - 1 Percent SO_2	105
23.	Investment for Pressurized Reductive Decomposition Process - 2 Percent SO_2	105
24.	Investment for Low-Pressure Reductive Decomposition Process - 10 Percent SO_2	106
25.	Investment for Two-Step Process	106
26.	Energy Cost for Pressurized Reductive Decomposition 1 Percent SO_2	109
27.	Energy Cost for Pressurized Reductive Decomposition 2 Percent SO_2	109
28.	Energy Cost for Low-Pressure Reductive Decomposition 10 Percent SO_2	110
29.	Energy Cost for Two-Step Regeneration Process	110
30.	Cost of Dolomite Required to Give Equal Once-through and Regenerative Costs	111
31.	Comparison of Regenerative Pressurized Fluid-Bed Combustion with Conventional Coal-Fired Power Generation	112
32.	Comparison of Environmental Impacts	114

ACKNOWLEDGEMENT

We want to express our high regard for and acknowledge the contribution of Mr. D. B. Henschel who served as the EPA project officer. Mr. P. P. Turner and Mr. R. P. Hangebrauck, Industrial Environmental Research Laboratory, EPA, are acknowledged for their continuing contributions through discussions and support of the program.

The program consultation and continued support of Dr. D. H. Archer, Manager, Chemical Engineering Research, at Westinghouse, are acknowledged.

SECTION 1

INTRODUCTION

Fluidized-bed combustion systems are being developed for a variety of applications (e.g., steam generation, electric power generation, process heat, ...) utilizing a number of concepts (e.g., atmospheric and pressurized combustion, temperature control by fuel-air ratio, heat-transfer surface, particle circulation). These systems have the potential for achieving lower costs, improved resource utilization, and reduced environmental impact compared to conventional combustion systems.

Developmental facilities for fluidized-bed combustion power generation are presently based on once-through sorbent (limestone or dolomite) operation. Although research facilities are addressing the area of sorbent regeneration, the technical and economic feasibility of regeneration is not yet known. Regeneration of sorbent for the purpose of reducing the rate of spent sorbent production, and possibly reducing its environmental impact, faces trade-offs in the areas of economics, environmental impact, plant complexity and reliability, and general technical performance.

The achievement of current New Source Performance Standards for large coal-fired steam generators (>250,000 lb/hr) is the basis for this study: SO_2 emission 516 ng/J (1.2 lb/MBtu), Particulate emission 43 ng/J (0.1 lb/MBtu), NO_x emission 301 ng/J (0.7 lb/MBtu).

The current status of technology in four areas has been covered: regeneration reaction schemes, sulfur recovery, CO_2 recovery, and sorbent circulation. Various processes or methods in use for each area relevant to fluidized-bed combustion sorbent regeneration are discussed. The advantages and disadvantages of each process, when

applied to regeneration, are outlined. Capital and operating costs as a function of key parameters for each of the above technologies have been projected.

Section 5 contains an evaluation of the economic potential, the technical feasibility, the problem areas, and the development requirements of the atmospheric-pressure one-step regeneration process (reductive decomposition) as applied to an atmospheric fluid-bed boiler (AFBC). Other regeneration processes have been studied previously.[1] The importance and effect of various design parameters, such as solids residence time in the regenerator, gas velocity and composition, temperature and pressure, are outlined. A discussion of process design factors, such as the concentration of SO_2 in the regenerator off-gas, reactivity of the regenerated sorbent, fresh sorbent makeup rate, and the thermal efficiency of the regenerator, are presented. The various process options for the sorbent, regenerator, fuel, and sorbent particle size distribution are discussed. Capital and energy costs of both once-through and regenerative options as a function of the coal sulfur content are projected. A cost sensitivity analysis of the process has been performed. Problem areas and development requirements are identified.

The economics and performance of three regeneration processes that function to regenerate the utilized SO_2 sorbent produced in the boilers of the pressurized fluid-bed combustion (PFBC) power plant have been reported.[1] These processes are a one-step process (reductive decomposition) operated at 1013 kPa pressure, the same one-step process operated at 100 kPa pressure, and a two-step regeneration process. A sensitivity analysis indicates the potential of the one-step process at both high and low pressures. An update of the work reported in 1973[1] appears in Section 6. Revised performance and economics are presented for all three concepts. The projections reflect current performance expectations and revised component cost data.

SECTION 2

CONCLUSIONS

The following conclusions can be drawn from a technical and economic evaluation of the regenerative processes involving the "one-step" reductive decomposition of the sulfated sorbent at atmospheric pressure and elevated pressures, and the elevated-pressure two-step reaction scheme:

- An integrated regeneration system for both atmospheric and pressurized fluidized-bed combustors has yet to be technically demonstrated. Information on critical performance factors for commercial operation is not yet available (e.g., regenerative sorbent activity, regeneration kinetics, desulfurizer kinetics with regenerative sorbents, sorbent attrition behavior, ash agglomeration behavior, sulfur recovery performance, environmental impact of regenerative spent sorbents).
- The sulfur recovery system is the dominant subsystem in the regenerative process. The pressurized one-step regeneration (reductive decomposition) results in low SO_2 concentrations in the regenerator off-gas (1-2 vol %) requiring significant amounts of coal for reductant, complex energy recovery, and sulfur recovery systems. The atmospheric regeneration yields 10 to 12 vol % of SO_2 and, hence, has a substantial advantage over the pressurized regeneration.
- In the case of atmospheric-pressure regeneration applied to pressurized fluidized-bed combustion

processes, the major uncertainty lies in the solids transport system (transporting hot solids between, for example, a 1013 kPa combustor and a 100 kPa regenerator).

- Assuming 2 and 12 vol % of SO_2 off of the regenerator for pressurized (PR) and atmospheric regeneration (AR), respectively, Ca/S makeup ratio of 1.0, a process sulfur load of 0.03 (mass of sulfur handled by the regeneration process per unit mass of coal fed to the fluid-bed boiler), and sulfur recovery in the form of elemental sulfur, the following capital costs for regeneration (635 MWe plant) in terms of $/kW have been projected:

AR for AFBC	PR for PFBC	AR for PFBC	Two-Step Regeneration for PFBC
32.2	66.8	57.2	80.1

Regeneration process investment cost includes the cost of the regeneration system, sulfur recovery system, and sorbent circulation system.

- Using the same bases as above, the following energy costs in terms of mills/kWh have been projected:

AR for AFBC	PR for PFBC	AR for PFBC	Two-Step Regeneration for PFBC
2.9	4.94	4.94	5.04

- For atmospheric regeneration applied to an atmospheric-pressure fluidized-bed combustion power plant, the following energy costs in terms of mills/kWh for a process sulfur load of 0.025 have been projected for three different fresh Ca/S makeup ratios in the case of regenerative operation, and for a Ca/S ratio of 2.2 in the case of the once-through option:

Regenerative Option Ca/S Makeup Ratio, mills/kWh			Once-through Option, mills/kWh
0.2	0.6	1.0	
1.9	2.2	2.5	1.92

In other words, for the condition assumed, a regenerative system would have to be able to reduce the fresh sorbent makeup rate to Ca/S = 0.2 or less in order to compete with a once-through system.

- If sulfur is recovered in the form of sulfuric acid rather than elemental sulfur, the capital cost of the regeneration process can be reduced to the following extent:

AR for AFBC	PR for PFBC	AR for PFBC
45%	24%	11%

- If a sulfur recovery process is developed specifically for fluidized-bed combustion sorbent regeneration, the regeneration potential may be considerably improved. If sulfur vapor rather than SO_2 can be produced in the regenerator the cost of regeneration may be reduced drastically. The scope and the need for process innovations in sulfur recovery are thus evident.

- The only regenerative PFBC power plant that is economically attractive, compared to a conventional power plant with limestone wet-scrubbing, is based on the low-pressure reductive decomposition. As indicated previously, however, the application of atmospheric regeneration to PFBC systems requires resolution of the potential difficulties associated with hot solids transport between the combustor and regenerator.
- The overall environmental performance (power plant efficiency, fuel consumption, spent solids quantity, plant reliability, etc.) of the low-pressure reductive decomposition is superior to the other regeneration processes.
- The once-through sorbent operation is superior to the regenerative operations in all environmental aspects except for the quantity of spent sorbent produced (i.e., coal consumption, plant efficiency, plant reliability, waste ash and sulfur, methane consumption).

A review of three critical support systems necessary for the evaluation of the regeneration processes shows the following:

- An assessment of commercial or near-commercial technology for the recovery of elemental sulfur from SO_2 streams shows that the Allied Chemical process is the most commercially developed. The RESOX process under development by Foster Wheeler appears to have several advantages over the Allied Chemical process. The most critical factor influencing the performance and cost of sulfur recovery is the concentration of SO_2 in the regenerator off-gas.

- An evaluation of the various solid transport techniques reveals that the dilute-phase pneumatic transport is the most suitable for the presently conceived fluidized-bed combustion power plant.
- From a review of the technology for the recovery of carbon dioxide, the hot carbonate processes appear to be the most promising.

SECTION 3

RECOMMENDATIONS

The following recommendations are made after reviewing the present technology applicable to regeneration and the development effort that has been carried out so far:

- Studies should be continued on particle attrition, sorbent deactivation due to the presence of fly ash or to sintering, or to particle agglomeration due to eutectic formation and gas-particle contacting in fluidized beds.
- Studies should be continued on the change in activity and the regenerability of the sorbent with repeated cycling, and the separation of sorbent and ash in the regenerator.
- The maximum percentage of SO_2 in the regenerator effluents that can be achieved in a continuous operation of the combustor-regenerator system at commercial operating conditions needs to be demonstrated.
- The development of sulfur recovery processes suitable for different regeneration schemes under consideration should be initiated.
- Exploratory work should be conducted on new schemes, such as the production of sulfur vapor rather than sulfur dioxide in the regenerator.
- The low-pressure reductive decomposition for PFBC appears to have greater potential than pressurized regeneration. The sorbent circulation system for the low-pressure regeneration for PFBC, the area of greatest uncertainty, should be evaluated in greater detail.

- The present developmental effort on regeneration should be directed to correspond to the operating conditions envisaged for commercial operation. Much of the past effort on regeneration appears to have no relevance to industrial practice.
- A regeneration system modeling study is needed to assess the regeneration technology and process economics in greater detail and to permit the assessment of the experimental data that is being accumulated.
- The development of optimum methods for the disposal/utilization of the spent sorbent, that meet environmental constraints, is necessary.
- Environmental emissions from regeneration/sulfur recovery systems, including air and liquid emissions, and including the leaching characteristics and other environmental impacts of the solid residue from the regeneration system, should be estimated and compared with the impacts of residue from once-through systems.

The following table shows the scale of equipment recommended for each type of study that needs to be either continued or initiated for establishing the feasibility and the commercialization of the regeneration processes considered in this study:

TABLE 1. SCALE OF EQUIPMENT RECOMMENDED FOR DIFFERENT TYPES OF STUDY

Nature of Study	TGA*	Bench-Scale	Pilot Plant	Demonstration Plant
Development of regeneration processed with in-situ partial combustion of coal in regenerator (demonstrates SO_2 concentration, sorbent activity)			X	X
Demonstration of integrated process (must be coupled with sulfur recovery process and include commercial plant operating demands)				X
Development of existing sulfur recovery processes for regeneration			X	X
Development of novel sulfur recovery processes for regeneration		X		
Exploratory work on new schemes such as the production of sulfur vapor in regenerator		X		
Change in the sorbent activity and regenerability with repeated cycling	X	X		
Sorbent deactivation due to sintering and the presence of fly ash	X	X		
Sorbent attrition		X	X	
Separation of sorbent and ash			X	
Utilized sorbent disposal/utilization		X	X	
Reconstitution of utilized sorbent for use in regeneration		X		
Environmental emissions from regeneration/sulfur recovery systems			X	X

*TGA - Thermogravimetric Analysis

SECTION 4

STATUS OF TECHNOLOGY

The primary regeneration concepts for fluidized-bed combustion using calcium-based sulfur sorbents have been identified.[2,3] The regeneration concepts being evaluated as part of the current task objectives are reviewed. Regeneration data were previously reviewed,[1] and performance conclusions based on recent data are incorporated in this report to provide an updated assessment of current information. In addition to the regeneration process itself, three critical support systems are reviewed in order to analyze regeneration processes for AFBC systems and to update the previous Westinghouse evaluation of regeneration for PFBC systems. These three support systems are: commercial and developing sulfur recovery technology; carbon dioxide recovery technology; and pneumatic transport technology. Performance and economic projections are presented to provide a basis for evaluating alternative sorbent regeneration processes.

REGENERATION REACTION SCHEMES

Several concepts have been proposed for the regeneration of calcium-based sorbents for use in fluidized-bed combustion systems. The following regeneration reaction schemes have the general thermodynamic potential indicated:

- Thermal decomposition: $CaSO_4 \rightleftharpoons CaO + SO_2 + 1/2\ O_2$
  Potential: severely limited by thermodynamics

- Reductive decomposition: $CaSO_4 + \begin{Bmatrix} CO \\ H_2 \end{Bmatrix} \rightleftharpoons CaO + SO_2 + \begin{Bmatrix} CO_2 \\ H_2O \end{Bmatrix}$

  Potential: possible for both atmospheric and pressurized operation; favored by lower pressures

- Two-step reaction scheme with sulfide generation followed by steam reaction:

$$CaSO_4 + 4\begin{Bmatrix} H_2 \\ CO \end{Bmatrix} \rightleftharpoons CaS + 4\begin{Bmatrix} H_2O \\ CO_2 \end{Bmatrix}$$

$$CaS + H_2O \rightleftharpoons CaO + H_2S$$

  Potential: second step severely limited by thermodynamics

- Two-step reaction scheme with sulfide generation followed by steam and CO_2 reaction:

  1) $CaSO_4 + 4\begin{Bmatrix} H_2 \\ CO \end{Bmatrix} \rightleftharpoons CaS + 4\begin{Bmatrix} H_2O \\ CO_2 \end{Bmatrix}$

  2) $CaS + H_2O + CO_2 \rightleftharpoons CaCO_3 + H_2S$

  Potential: second step thermodynamically limited to pressurized operation

- Two-step reaction scheme with sulfide generation followed by oxidation:

  1) $CaSO_4 + 4\begin{Bmatrix} H_2 \\ CO \end{Bmatrix} \rightleftharpoons CaS + 4\begin{Bmatrix} H_2O \\ CO_2 \end{Bmatrix}$

  2) $CaS + 3/2\ O_2 \rightleftharpoons CaO + SO_2$

  Potential: thermodynamically identical to reductive decomposition (i.e., the second step is really the sum of the reactions

$$CaS + 2\ O_2 \rightleftharpoons CaSO_4$$

$$3\ CaSO_4 + CaS \rightleftharpoons 4\ CaO + 4\ SO_2 \quad ,$$

  and the latter reaction is the one that characterizes reductive decomposition thermodynamics).

- Two-step reaction scheme with partial sulfide generation followed by solid-solid sulfide-sulfate reaction:

$$1)\quad CaSO_4 + 4\begin{Bmatrix} H_2 \\ CO \end{Bmatrix} \rightleftharpoons CaS + 4\begin{Bmatrix} H_2O \\ CO_2 \end{Bmatrix}$$

$$2)\quad 3\ CaSO_4 + CaS \rightleftharpoons 4\ CaO + 4\ SO_2$$

Potential: High SO_2 concentrations thermodynamically possible for atmospheric or pressurized operation.

- Two-step reaction scheme with sulfide generation followed by slurry carbonation (Claus-Chance reaction)[4]:

$$1)\quad CaSO_4 + 4\begin{Bmatrix} H_2 \\ CO \end{Bmatrix} \rightleftharpoons CaS + 4\begin{Bmatrix} H_2O \\ CO_2 \end{Bmatrix}$$

$$2)\quad CaS + H_2O(\ell) + CO_2 \rightleftharpoons CaCO_3 + H_2S$$

or, in separate stages,

$$2a)\quad 2\ CaS + CO_2 + H_2O(\ell) \rightleftharpoons Ca(HS)_2 + CaCO_3$$

$$2b)\quad Ca(HS)_2 + CO_2 + H_2O(\ell) \rightleftharpoons CaCO_3 + 2\ H_2S$$

Potential: high H_2S concentration

- Two-step reaction scheme with sulfide generation followed by Shaffner and Helbig reaction[4]:

$$1)\quad CaSO_4 + 4\begin{Bmatrix} H_2 \\ CO \end{Bmatrix} \rightleftharpoons CaS + 4\begin{Bmatrix} H_2O \\ CO_2 \end{Bmatrix}$$

$$2)\quad CaS + MgCl_2 + 2\ H_2O \rightleftharpoons H_2S + CaCl_2 + Mg(OH)_2$$

$$Mg(OH)_2 + CaCl_2 + CO_2 \rightleftharpoons CaCO_3 + MgCl_2 + H_2O$$

Potential: high H_2S concentration.

Of the eight regeneration reaction schemes shown, only two concepts were evaluated or tested: the reductive decomposition at atmospheric pressure and elevated pressures (see Figure 18) and the two-step reaction scheme with sulfide generation followed by steam and CO_2 reaction for pressurized operation (see Figure 8). The reductive decomposition scheme is a high-temperature route (typically about 1100°C), while the two-step scheme is a relatively low-temperature route to regenerated sorbent (the maximum temperature in the sulfide generation step is approximately 800°C and about 700°C in the H_2S generation stage).

Argonne (ANL)[5] is studying the kinetics of the solid-solid sulfide-sulfate reaction but has not proposed an integrated process concept. The two two-step regeneration concepts with aqueous-phase reaction steps would result in fine precipitates of $CaCO_3$ and would require a reconstitution process step to generate a suitable sorbent particle structure. Esso (UK)[6] has demonstrated the second step of the two-step reaction scheme with sulfide generation followed by oxidation on a pilot plant scale, but the performance of this reaction scheme shows no advantage over reductive decomposition.

The reductive decomposition concept and the two-step regeneration concept with steam and CO_2 reaction are evaluated for AFBC (Section 5) and PFBC (Section 6) power generation systems. The reductive decomposition regeneration scheme consists of reducing $CaSO_4$ to CaO in a single fluidized-bed vessel at a temperature of about 1100°C. This reduction can be carried out at atmospheric pressure or at pressures as high as 1013 kPa. The two-step regeneration scheme consists of reducing $CaSO_4$ to CaS in the first step at about 815°C and then converting CaS to $CaCO_3$ in the second step at about 675°C. The first step is thermodynamically favored by low temperature and unaffected by pressure, while in the second step increased H_2S concentration is favored by low temperature and high pressure (1000 to 1200 kPa), which also suppresses competing side reactions. The two-step regeneration scheme is thus suitable for high-pressure operation.

Several specific processing concepts are proposed and evaluated for these regeneration schemes in Sections 5 and 6.

EXPERIMENTAL STATUS AND PERFORMANCE PROJECTIONS

An integrated fluidized-bed combustion-sorbent regeneration system has not yet been constructed or operated. The only truly continuous combustion-regeneration simulation available is the Exxon miniplant (pressurized combustor), which does not represent a totally integrated facility (i.e., no coal feeding to regenerator, no sulfur recovery, no spent sorbent processing).[7] Operation of the Exxon miniplant regeneratively is in the early stages. Other large-scale fluidized-bed combustion systems (e.g., the Rivesville 30 MWe atmospheric-pressure fluidized-bed boiler) are being based initially on once-through sorbent operation.

Most of the experimental information on sorbent regeneration has resulted from the operation of batch or semicontinuous small-scale fluidized-bed units or from thermogravimetric apparatus. Several organizations have been involved in studies of reductive decomposition regeneration and two-step regeneration. Some key findings are reviewed and interpreted.

Reductive Decomposition

A comprehensive atmospheric-pressure regeneration program is under way on a bench-scale process development unit at ANL.[5] The results obtained to date for atmospheric-pressure reductive decomposition are encouraging and report a maximum SO_2 concentration of about 8.5 vol % in the dry regenerator off-gas in a ten-cycle combustion-regeneration experiment at a pressure of 152 kPa and a temperature of 1100°C with slightly oxygen-enriched air. The extent of sorbent regeneration was about 70 percent. In another experiment at a pressure of 124 kPa, the maximum concentration of SO_2 was about 10.4 vol %. Sorbent losses per cycle due to attrition followed by elutriation were about 10 wt %.

Argonne presented a correlation for the extent of CaO regeneration as a function of temperature and sorbent residence time:

$$\ln(1 - X) = A \cdot T_s + B \cdot T_s^2$$

where

X = extent of CaO regeneration

T_s = sorbent residence time, min

A, B = function of temperature, represented by quadratic equations obtained in the temperature range of 980°C (1800°F) to 1100°C (2000°F).

Exxon[8] conducted batch reductive decomposition regeneration studies with the partial in situ combustion of natural gas at a pressure of 910 kPa and a temperature of 1040°C. They obtained SO_2 levels in the regenerator off-gas in the range of 0.7 to 1.0 vol %, while the equilibrium concentration was about 2.5 to 3 percent. In a recent 100-hour continuous conbustion-regeneration shakedown run of the miniplant, they obtained an average SO_2 concentration of about 0.5 percent with regenerator conditions of 770 kPa and 1010°C. The possible reasons for these low levels of SO_2 are the heat losses and the large diameter of the regenerator.

Exxon[9] had reported in earlier studies that a concentration of SO_2 in the regenerator off-gas of about 7.8 percent could be obtained at 1100°C and atmospheric pressure. Their batch absorption-regeneration experiments suggest that the sorbent could retain sulfur absorption activity after five to six cycles. The data Exxon obtained indicate that coal fly ash also deactivates the sorbent.

The reductive decomposition regeneration work by Wheelock[10] supports the concept of a two-zone reactor where oxidizing and reducing zones were created to minimize the formation of CaS. The reduction of $CaSO_4$ (gypsum) with CO or H_2 was studied in the temperature range from 1150 to 1260°C, with partial combustion of natural gas. The reaction

rate reached a peak around 1200°C but reduced drastically around 1260°C, possibly due to the sintering of the material that closes up the pore structure. The reaction rate was observed to be first order with respect to the reducing-gas concentration. The diffusion of the reducing gas through the pores appears to be a controlling resistance. Although this study was conducted on gypsum, it has a strong bearing on the regeneration studies involving sulfated limestone or dolomite. Wheelock points out the impurities coming from coal or sorbent may react with calcium oxide, leading to sintering and slagging, thus reducing the ability of the material to adsorb SO_2.

Two-Step Regeneration

Argonne performed TGA and batch fluidized-bed studies on the two-step regeneration scheme for PFBC. The first step of this reaction (reduction of calcium sulfate to calcium sulfide) was found to proceed to high levels of conversion. The second step (the carbonation of the sorbent and generation of H_2S) was found to be the limiting step. Cycling the sorbent resulted in rapid loss of activity, reduction in the H_2S concentration generated, and reduction in the extent of regeneration. No programs are now actively pursuing this two-step reaction scheme.

Commercial Performance Projections

The present state-of-development of modeling gas-solid reactions and fluidization phenomena does not permit the comprehensive assessment and scaling of the small-scale data to the commercial conditions. Even on an elementary level of modeling, the material and energy balance limitations and process design constraints that influence the regeneration system must be determined in order to project process performance. Phenomena such as particle attrition, sorbent deactivation, particle agglomeration due to eutectic formation, gas-particle contacting in fluidized beds, and so on, are not well understood and may result in unreliable and optimistic projections of system performance. The limitations of projections that have been presented in the literature must

be understood and applied with caution. For example, Argonne estimated a sorbent makeup calcium-to-sulfur ratio of 0.35 for atmospheric-pressure reductive decomposition based on their cyclic tests, and Exxon estimated a ratio of 0.55 from early atmospheric-pressure cyclic results.[5,9] Exxon also projected very low levels of sorbent makeup on the basis of the miniplant shakedown tests, which applied noncommercial operating conditions. These projections could not account for the variety of sources for sorbent deactivation, attrition, or other losses that will occur in a commercial plant.

Argonne applied their cyclic results in a mass and energy constrained process model to predict concentration of SO_2 in the regenerator off-gas beyond the experimental range, both for atmospheric and pressurized operation.[5] They predicted that maximum SO_2 concentration will be obtained for a solids residence time of about 2.5 minutes, for a temperature of both 1040 and 1100°C. Short sorbent residence times in the regenerator have been recommended, but no attempt has been made to interpret the batch-cyclic data in terms of a continuous process with wide distributions in sorbent residence times or to investigate the process implications of such short particle residence times.

Tentative projections of regeneration performance made for the purpose of process feasibility evaluation are presented in Sections 5 and 6.

SULFUR RECOVERY FROM REGENERATOR OFF-GAS

The commercially available options for sulfur recovery were identified by means of the open literature and vendor contacts. Preliminary economic projections and technological constraints for the sulfur recovery processes were compiled to show the influence of major variables upon process feasibility.

Conclusions

In general, commercial technology is available for the recovery of elemental sulfur from H_2S and SO_2 gas streams with concentrations down

to less than 1 mole percent and up to 100 percent. The economics of sulfur recovery with acid-gas concentrations less than 10 percent H_2S or SO_2 will have a significant impact upon the overall power plant economics.

The environmental impact of sulfur recovery will also be significant, especially for the cases of low SO_2 or H_2S acid-gas concentrations. Commercial sulfur recovery techniques require the consumption of clean fuels for SO_2 reduction, tail-gas incineration, and so on. Purge streams of environmentally unattractive by-products will be generated. The sulfur recovery efficiency drops as acid-gas H_2S or SO_2 concentration is reduced.

Technological constraints will be characteristic of each of the potential sulfur recovery processes. Acid-gas cleaning, cooling, and water removal requirements prior to sulfur recovery may be stringent with some processes. Process fluctuations in acid-gas composition or flow rate may seriously limit sulfur recovery performance. The overall power plant process logic will depend on the sulfur recovery process energy requirements, operating conditions, steam generation capabilities, and the ability or need to recycle the sulfur recovery tail-gas.

Numerous developing or experimental sulfur recovery techniques have been proposed that might improve the feasibility of sulfur recovery, but these processes are not presently available or proved. Development efforts must consider commercial technology as a design basis, but must continue to factor in new developments. Specific sulfur recovery technology has been recommended for alternative sulfur removal systems for fluidized-bed combustion with calcium-based sorbents (Table 2).

Fluidized-Bed Combustion Power Plant Sulfur Production Rates

The rate of production of sulfur in a fluidized-bed combustion power plant is dependent upon the sulfur content of the coal. Figure 1

TABLE 2. SUMMARY OF SULFUR RECOVERY COSTS FOR FLUIDIZED-BED COMBUSTION SORBENT REGENERATION

Regeneration Process	Expected SO_2 (H_2S) (vol %)	Recommended Sulfur Recovery Process	Sulfur in Coal (wt %)	Sulfur Production Rate (Mg/day)	Capital Investment ($/kW)	Production Cost (mills/kWh)
Two step: CO_2 and steam	3 (H_2S)	Stretford or Claus process with Wellman-Lord SO_2 recycle	2	60	8-12	0.40
			3	120	12-18	0.70
			5	220	18-26	1.10
One step: at pressure (1000 kPa)	2-3	Allied Chemical with Wellman-Lord preliminary concentration	2	60	16-20	1.0-1.2
			3	120	24-29	1.6-2.0
			5	220	35-43	2.4-3.0
		Conventional sulfuric acid plant	2	60	10-12	0.4-0.5
			3	120	15-19	0.7-0.8
			5	220	21-27	1.0-1.3
One-step: atmospheric pressure	10	Allied Chemical (or Foster-Wheeler RESOX process when commercially available)	2	60	8-13	0.4
			3	120	12-19	0.6
			5	220	17-27	0.9
		conventional sulfuric acid plant	2	60	5	0.2
			3	120	7	0.4
			5	220	10	0.5

Basis: 1976; 600 MWe power plant; 90% sulfur recovery efficiency; no credit for sale of recovered sulfur or sulfuric acid; for further details see Figures 1 through 7.

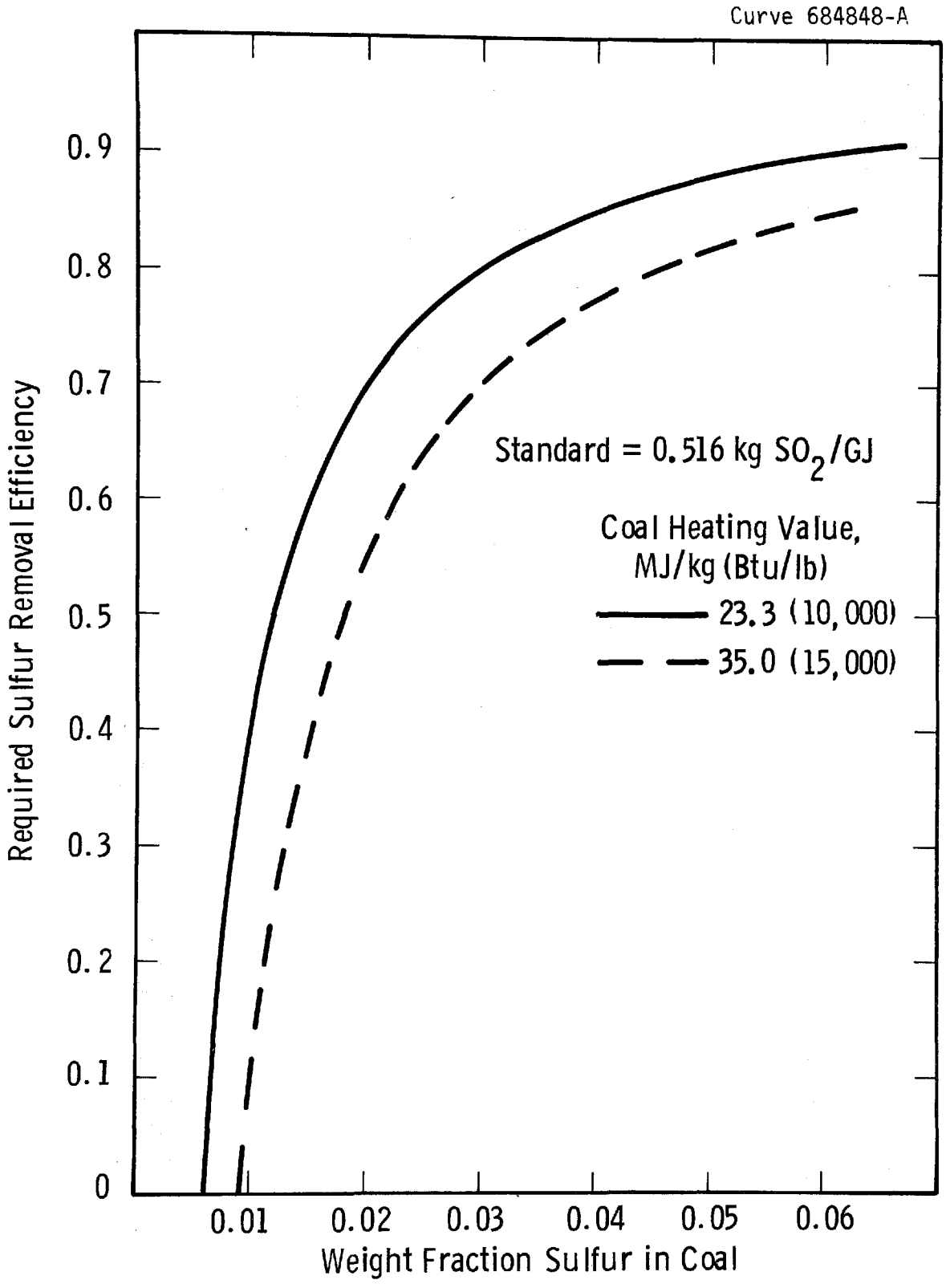

Figure 1. Required Combustor Sulfur Removal Efficiency

shows the power plant sulfur removal efficiency required to meet the present EPA SO_2 emission standard. Two coal heating values that cover the range of heating values typical to Eastern coals are considered.

Figure 2 shows the required rate of sulfur production (Mg/day) from a 600 MWe power plant as a function of the coal sulfur content. Again, two coal heating values are considered. Due to the large variation in coal properties, the sulfur production rate required by a 600 MWe power plant could conceivably range from 20 up to 350 Mg/day.

Recovery of Elemental Sulfur From H_2S Gas Streams

A two-step regeneration process could be utilized by the pressurized (∿1013 kPa) fluidized-bed combustion system to regenerate sorbent in the form $CaCO_3$.[12] H_2S is produced by the reaction of H_2O and CO_2, with CaS (formed in the first stage from $CaSO_4$ reduction) at about 700°C and about 1000 kPa pressure. Ratios (by volume) of steam to CO_2 of about 1:1 are expected for the reaction system, although this ratio is a critical process variable presently under study. Elemental sulfur will be recovered from the H_2S-H_2O-CO_2 gas stream. Particular attention must be accorded the utilization of the steam and CO_2 components because replacement or recovery is expensive.

Commercial technology for H_2S conversion to elemental sulfur is represented by both vapor-phase and liquid-phase oxidation processes:

- The Claus process (designed and operated by numerous firms)[13]
- The Stretford process[14] (Ralph M. Parsons Co. and Union Oil Co. of California)
- The Takahax process (Tokyo Gas Company, licensed to Ford, Bacon and Davis)
- The Giammarco-Vetrocoke process (Powergas Corp.).

The Claus process operates at atmospheric pressure (up to 200 kPa). Though Claus plants have not been built to operate at elevated pressures

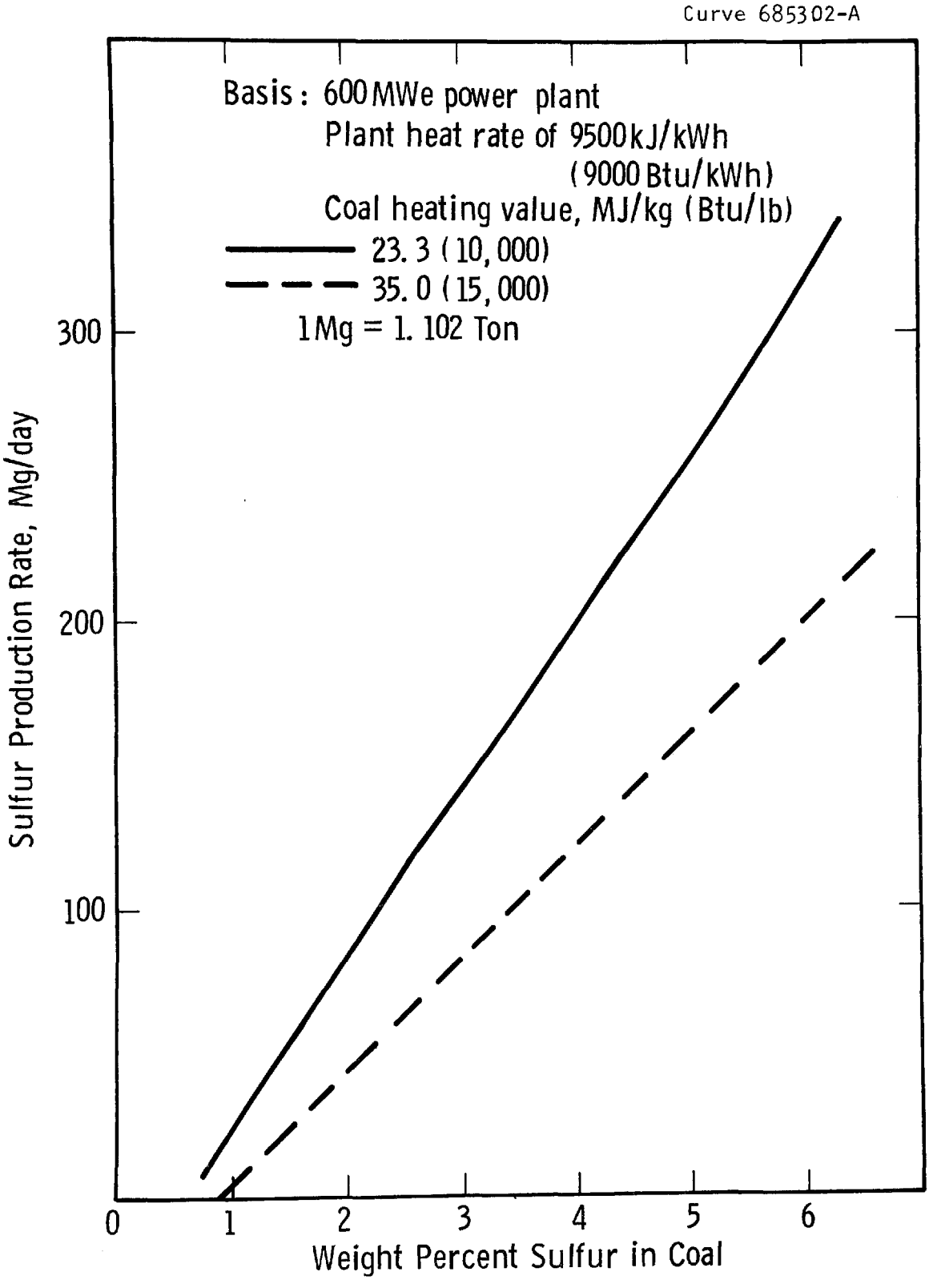

Figure 2. Sulfur Production Rate

(∿1000 kPa), it apparently would be possible to design and operate an elevated pressure Claus plant, possibly with improved economics.[15] This would be advantageous in terms of recycling CO_2 to the regenerator, since the regenerator operates at about 1000 kPa, although purification of the CO_2 stream may be required.

The Claus sulfur recovery performance is very sensitive to the water content of the regenerator acid-gas and other contaminants.[16] Because the regenerator gas will probably contain very high water contents (up to ∿50 mole percent), the water level must be reduced to about 10 percent H_2O by cooling and condensation. The regenerator gas must also be cleaned of particulate material prior to sulfur recovery in order to avoid operating problems and to produce a pure sulfur product.

The Stretford process does not adsorb CO_2 from the regenerator acid-gas, so CO_2 recycle to the regenerator is simplified.[17] The adsorption step will operate at the regenerator pressure to produce a clean CO_2 gas requiring low recompression to return it to the regenerator. The Giammarco-Vetrocoke process also operates at pressure and, like the Stretford process, produces an environmentally unattractive by-product.[18] A liquid-phase Claus process, such as that investigated on a laboratory scale by Consolidation Coal,[19] would be advantageous in ways similar to the Stretford process because (1) no CO_2 would be adsorbed, (2) steam need not be removed from the acid-gas prior to sulfur recovery, and (3) the pressurized operation permits simplified recycle of the CO_2 gas to the regenerator without purification.

Commercial Process Operating Factors

The most critical factor influencing the performance, equipment selection, and cost of sulfur recovery is the volume fraction of H_2S

(and H_2O) in the regenerator gas. The sulfur recovery efficiency is reduced as the H_2S concentration is reduced (and the H_2O concentration increases).

- Greater than 15 percent H_2S in the dry gas ($\sim$10 percent H_2O) (equivalent to 9.1 percent H_2S in the wet regenerator gas)

A conventional Claus plant can be used with a resulting sulfur recovery efficiency $\geq$90 percent with two or three Claus reaction stages. Four basic process variations are used, depending upon the H_2S concentration.[13] Lower H_2S concentrations require a tail-gas cleaning or preliminary concentration of the regenerator gas.

- Greater than about 6 percent H_2S (dry basis) (equivalent to about 3.5 percent H_2S in the wet regenerator gas)[20]

A conventional Claus process followed by a tail-gas cleanup process such as Beavon,[14] Shell Scot, Cleanair, Sulfreen (low-temperature Claus Reaction), or IFP process (liquid-phase Claus) must be used in order to achieve 90 percent recovery efficiency.

- Greater than about 1.5 percent H_2S (dry basis) (equivalent to about 0.85 percent H_2S in the wet regenerator gas)[20]

The Stretford process, or a Claus process followed by incineration, and Wellman-Lord, Haldor Topsoe, Chiyoda, or some other SO_2-concentrating step with SO_2 recycle to the Claus plant will achieve sulfur recovery efficiencies of 90 percent or greater.

- Less than about 1.0 percent H_2S in the wet regenerator gas

A preliminary H_2S concentrating process such as Selexol, ADIP, Benfield, Catacarb, Sulfinol, or MEA must be used. Because all of the H_2S absorption processes identified also absorb large amounts of CO_2 (25 to 90 percent), the concentrating equipment will be large and the resulting concentrated H_2S will still be relatively dilute. The preliminary concentrating process will be followed by one of the previous

three options, depending upon the resulting H_2S concentrations. The purification steps operate at pressures of 1000 to 2000 kPa and produce an essentially atmospheric-pressure, concentrated H_2S stream.

All of the sulfur recovery options require incineration of the tail-gas before releasing it to the environment. The processes will all have some solid or liquid waste associated with them. The Claus process will produce minor amounts of spent catalyst. The tail-gas cleanup processes, the Stretford and Wellman-Lord processes, and the H_2S-concentrating processes will all produce some form of liquid waste requiring treatment. All of the sulfur recovery processes require the utilization of clean fuels for partial combustion of the H_2S stream or incineration of tail-gas.

Economics

Capital and operating costs have been projected for the recovery of sulfur from H_2S for the sulfur recovery options described. The basis for costing is a 600 MWe power plant with a sulfur production rate of 181 Mg sulfur/day. The regenerator reactant gas is assumed to be 50 percent H_2O and 50 percent CO_2.

Capital investments in $/kW (direct costs - i.e., do not include freight, insurance, taxes, construction overhead, engineering, contingency, and contractor fee - usually a factor of about 30 percent of direct costs) are shown in Figure 3 as a function of the regenerator gas H_2S volume percent. The costs include condensation of the water to a level of about 10 percent in the regenerator gas and incineration of the final tail-gas. The costs are probably accurate to about ±30 percent. For other sulfur production rates the capital investments should be scaled with a 0.6 power factor.

The cost of producing sulfur in mills/kWh is estimated in Figure 4. The basis of 181 Mg sulfur/day with no credit for sulfur or steam generation was applied. Scaling to other sulfur production rates requires a power factor of about 0.7.

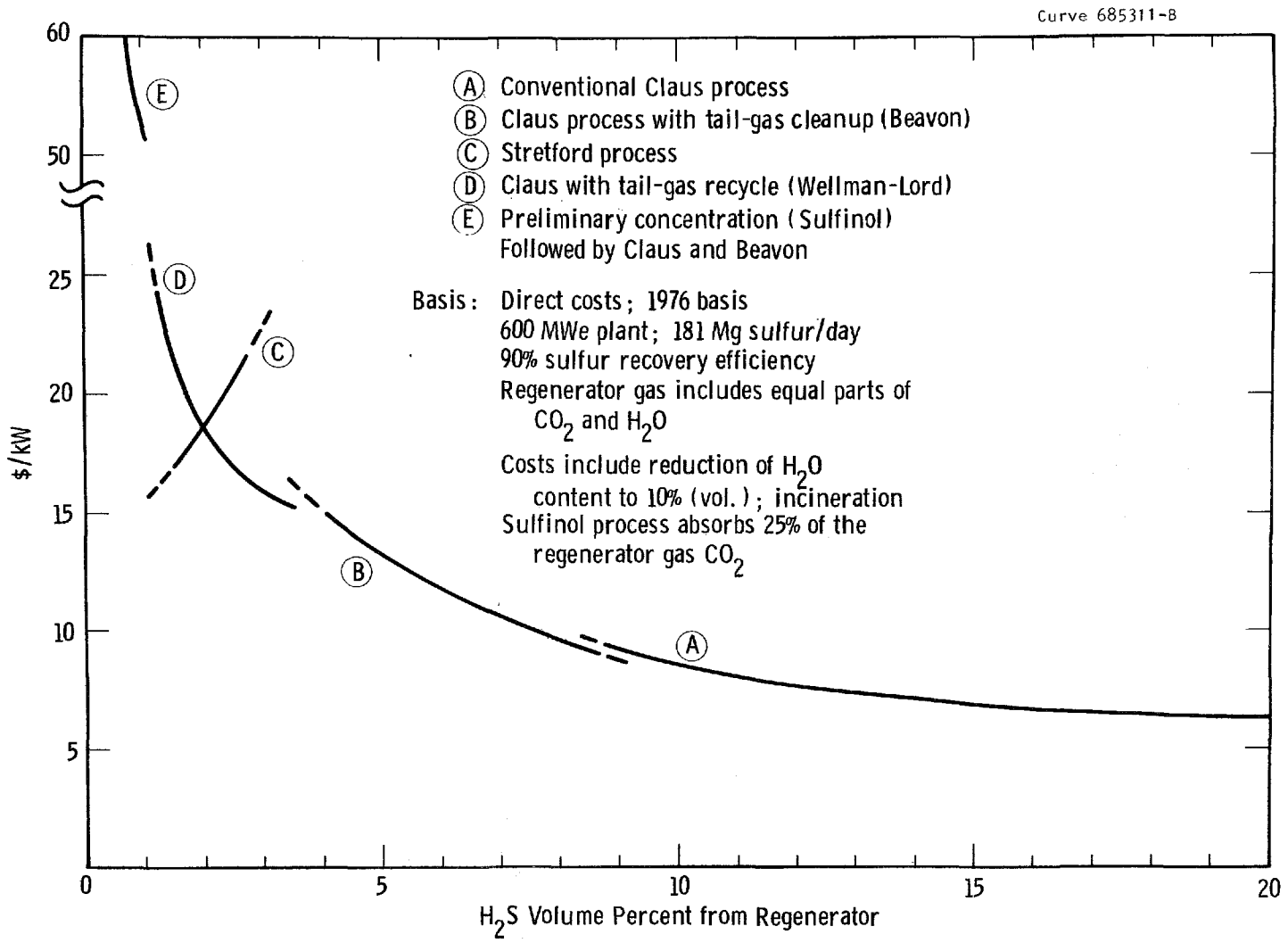

Figure 3. Capital Investment for Sulfur Recovery with Steam and CO_2 Regeneration Process (H_2S Generated)

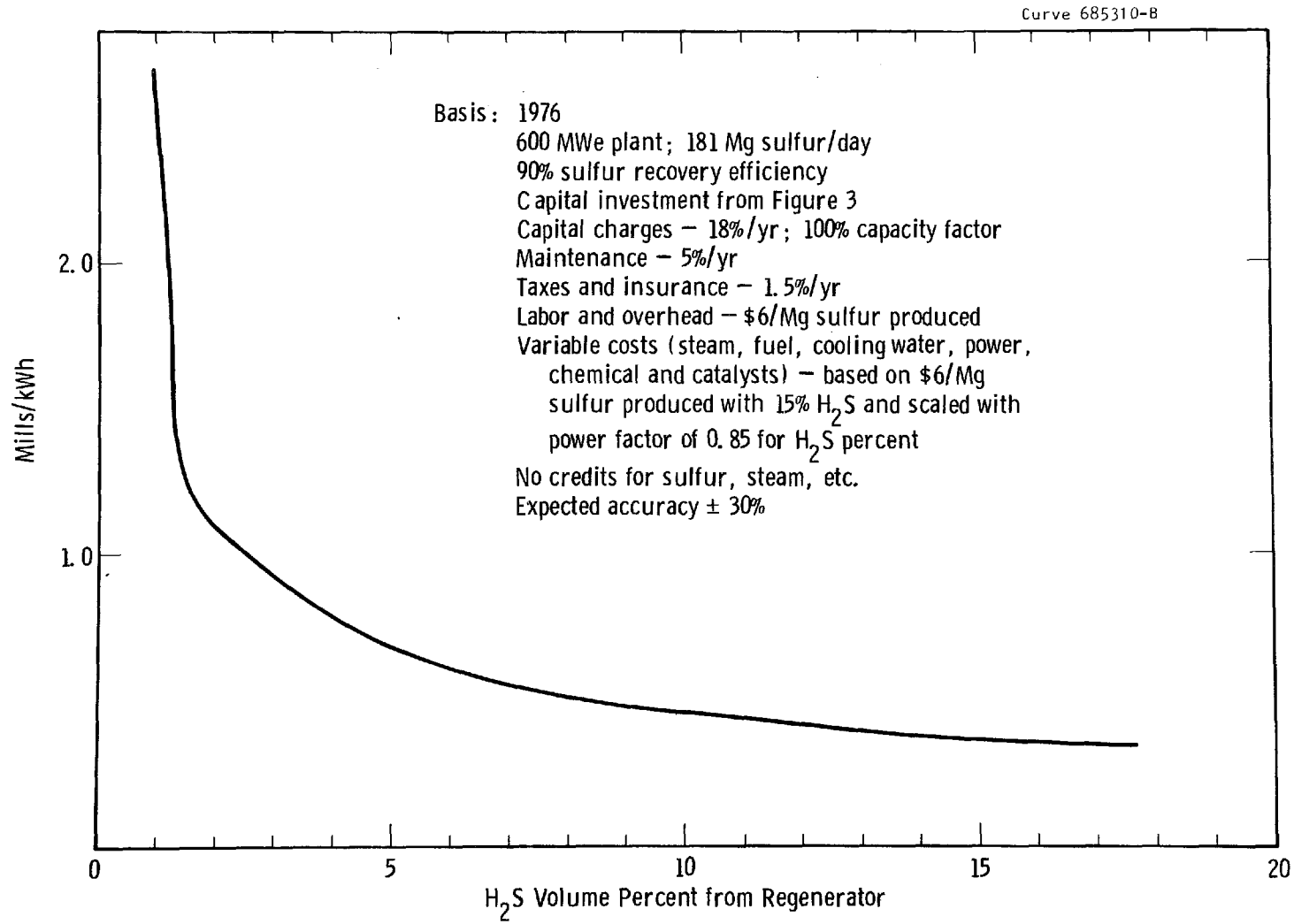

Figure 4. Sulfur Production Cost for Steam and CO_2 Regeneration Process (H_2S Generated)

Recovery of Elemental Sulfur from SO_2 Gas Streams

Calcium sulfate may be reductively decomposed to calcium oxide and SO_2 by contacting the utilized sorbent with a variety of reductants (H_2, CO, CH_4, carbon, etc.) at about 1100°C. The regeneration scheme may be applied to either the AFBC or the PFBC systems. Oxidation of CaS produced by oil or coal gasification will produce a similar SO_2 gas stream. The product gas from the regenerator will con-tain SO_2 (and traces of other sulfur compounds), low levels of reductants (H_2 and CO), CO_2, H_2O, and N_2 and low levels of oxygen (probably less than 0.5 vol %. If coal is used as a reductant in the regenerator, the gas may also contain traces of hydrocarbons, tars, coal ash, and various trace elements.

Commercial or near commercial technology for the recovery of elemental sulfur from SO_2 streams is represented by

- Direct reduction of SO_2 to sulfur -
  Allied Chemical process (using methane or alternative reductants)[21]
  Foster Wheeler RESOX process (using coal)[22]
  ASARCO-Phelps Dodge process[23]
  Bureau of Mines citrate process
  Westvaco activated carbon process
  Stauffer Aquaclaus process

Other technology has been summarized.[24]

- Generation of H_2S for Claus reaction with the regenerator SO_2 stream -
  Reduction of SO_2 to H_2S using methane[15]
  Generation of H_2S by sulfur-methane reaction[25]

Numerous processes are also available for the initial concentration of SO_2 streams (Wellman-Lord, Bergban-Forschung, ASARCO DMA, Cominco process, Haldor Topsoe, Chiyoda, etc.) in the case where the regenerator gas is very dilute in SO_2.

The Allied Chemical process is the most commercially developed of all of these processes.[26] The process can be applied directly with SO_2 volume fractions of 1.0 to 0.04. Below 4 percent SO_2 a preliminary concentration process must be applied because of thermodynamic and heat balance limits. The Allied Chemical process is also sensitive to the regenerator gas oxygen content since this oxygen must also be reduced; but because low oxygen levels are expected, this factor will not be a concern. Only low-pressure plants have been developed. The process requires that the regenerator gas be cooled and cleaned of particulates and impurities, such as arsenic and selenium oxides, in order to produce high-quality sulfur. About 400,000 dm^3 methane/Mg of sulfur (13,000 scf methane/ton of sulfur) is required for SO_2 reduction with no oxygen in the gas stream. Allied Chemical is also developing the utilization of alternative liquid reductants from propane to middle distillates.[26]

The Foster-Wheeler RESOX process presently in the pilot stage, has several apparent advantages over the Allied Chemical process for this application. The regenerator gas does not require as much cooling and cleaning before reduction, and coal is used as the reductant. The sulfur recovery efficiency of the process, however, may be lower than that of the Allied Chemical process, and preliminary concentration of the regenerator gas or tail-gas cleaning may be required at higher SO_2 mole fractions than with the Allied Chemical process. A pressurized version of the RESOX process may result in much improved economics when compared to the low-pressure design considered here.

Economics

Capital investments and sulfur production costs have been estimated for the Allied Chemical sulfur recovery process and for the Foster-Wheeler RESOX process (atmospheric-pressure operation). Figure 5 shows the capital investment (direct cost) in $/kW as a function of the SO_2 volume fraction in the regenerator gas. The direct Allied Chemical

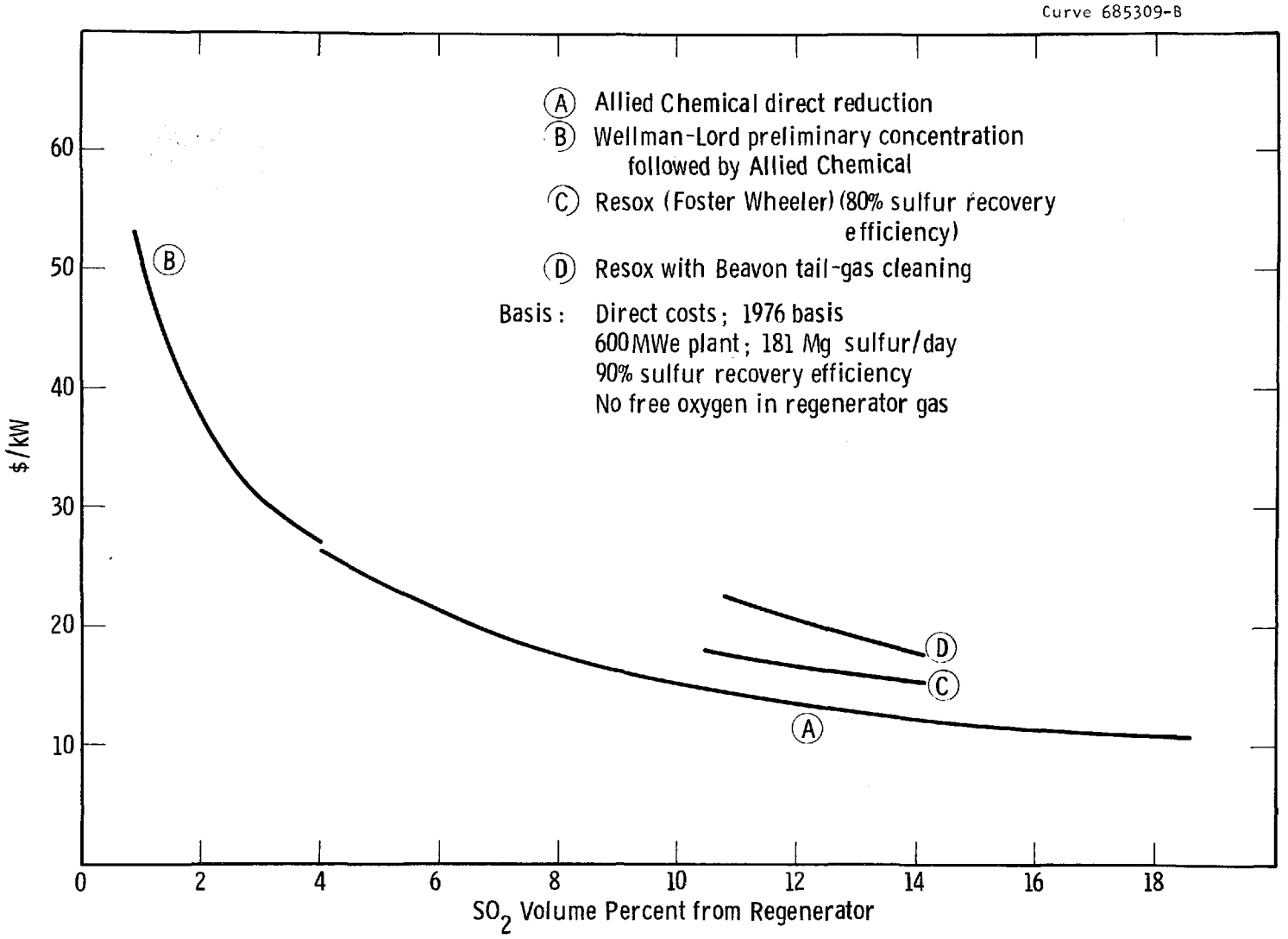

Figure 5. Capital Investment for Sulfur Recovery with the One-Step Regeneration Process (SO_2 Generated)

process is represented for SO_2 contents down to 4 vol %, and for lower SO_2 contents the Wellman-Lord preliminary concentration process is applied.

The RESOX process is shown over a limited range of SO_2 concentrations because of limited cost information. A curve for the RESOX process alone, which results in an estimated 80 percent sulfur recovery efficiency, and a curve with the RESOX process followed by the Beavon tail-gas cleaning process, which results in a sulfur recovery efficiency of about 95 percent, are both shown in the figure.

Estimates of capital investment at other sulfur production capacities may be obtained by using a 0.6 power factor.

Figure 6 shows the estimate of sulfur production cost as a function of the SO_2 volume fraction in the regeneration gas. The Allied Chemical and RESOX processes require about the same auxiliary power and the cost of methane and coal will be nearly identical (with a coal rate of about 1 Mg coal per Mg sulfur produced for a 12 percent SO_2 stream). The RESOX process requires much less cooling water than the Allied Chemical process. Overall sulfur production costs are expected to be about the same for the two processes in the SO_2 vol % range where cost data are available for the RESOX process.

The sulfur production cost (mills/kWh) may be scaled for different sulfur production rates with a 0.7 power factor. No credits have been taken for the sulfur product or steam production.

Sulfuric Acid Production from SO_2 Gas Streams

The technology to produce concentrated sulfuric acid from a variety of SO_2 sources is well developed and should be applicable to the product gas from the one-step regeneration process.[27,28] While the recovery of elemental sulfur may be advantageous when considering storage, disposal, or marketing of the product, the economics of sulfuric acid production is estimated in order to provide a basis of comparison.

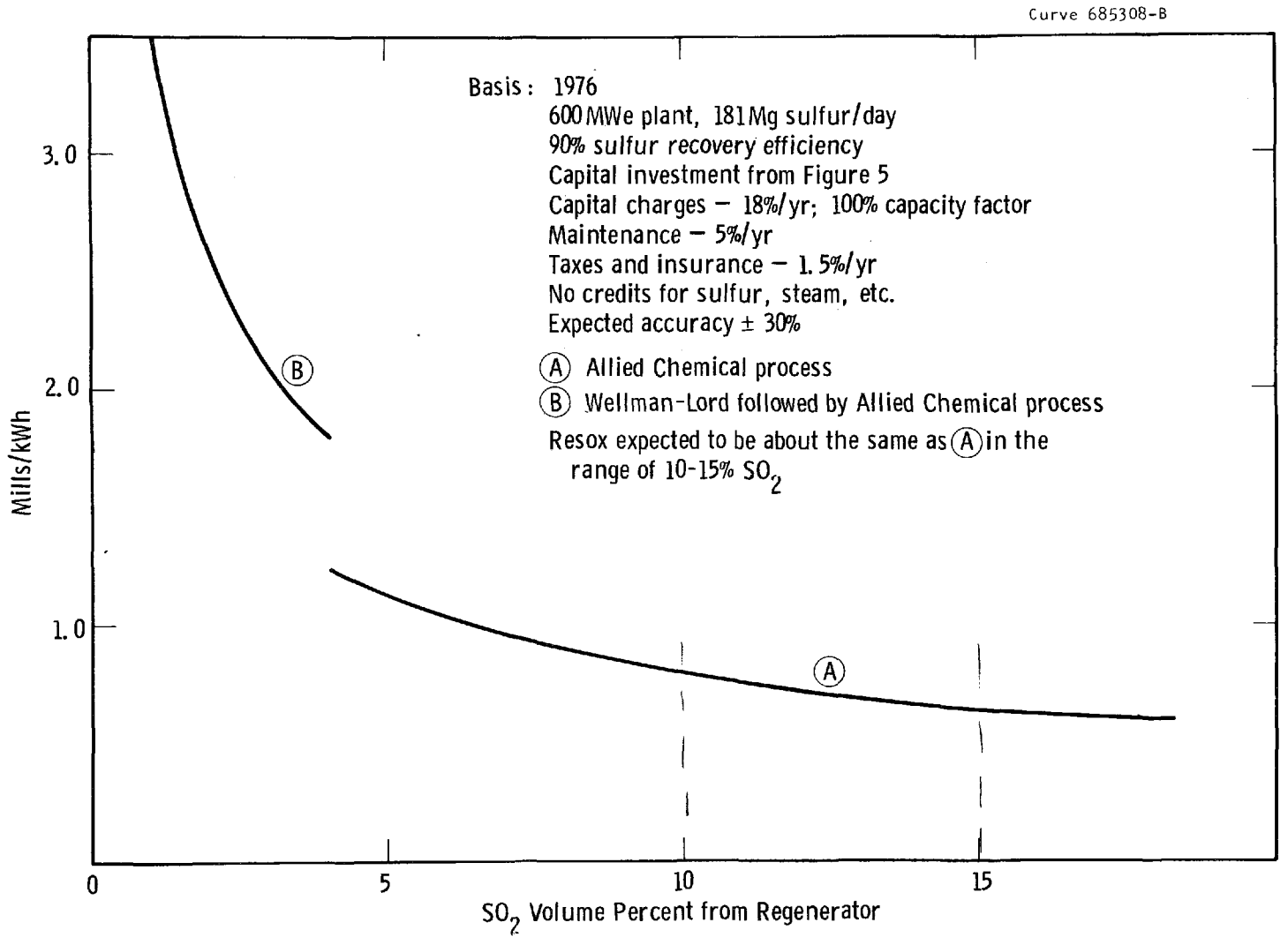

Figure 6. Sulfur Production Cost for One-Step Regeneration Process (SO_2 Generated)

Figure 7 gives the estimated capital investment and production cost for sulfuric acid as a function of the SO_2 vol % in the regenerator gas taken from the open literature and vendor quotes. The basis applied in Figure 7 is identical with that used for the elemental sulfur production costs (1976 costs, 181 Mg sulfur (equivalent) per day, etc.).

Assessment

The cost information developed is summarized in Table 2 for fluidized-bed combustion with calcium-based sorbents along with estimates of the regenerator gas composition expected for the various regeneration schemes. Capital investments and production costs are given for a range of coal sulfur contents (or sulfur production rates) for elemental sulfur and sulfuric acid production. Specific sulfur recovery processes are recommended for each of the regeneration cases.

The high-pressure one-step regeneration requires the highest sulfur recovery costs, while the atmospheric-pressure one-step regeneration and the two-step regeneration require sulfur recovery costs that are comparable. The recovery of sulfur as sulfuric acid is about one-half as costly as the recovery of elemental sulfur. The updated sulfur recovery costs are higher than the cost projected in the 1973 regeneration study[12] by about a factor of 7 for the one-step regeneration at pressure, 4 for the atmospheric-pressure one-step, and 2.5 for the two-step regeneration.

While these cost estimates do not provide sufficient information to permit the selection of the preferred sorbent regeneration scheme and do not provide grounds for the evaluation of elemental sulfur recovery versus sulfuric acid production, they do provide a basis for the evaluation of sorbent regeneration when coupled with process studies involving the entire power plant. It appears that the cost of sulfur recovery will have a significant effect on the power plant economics. The environmental performance of the power plant will also be significantly affected by the sulfur recovery process.

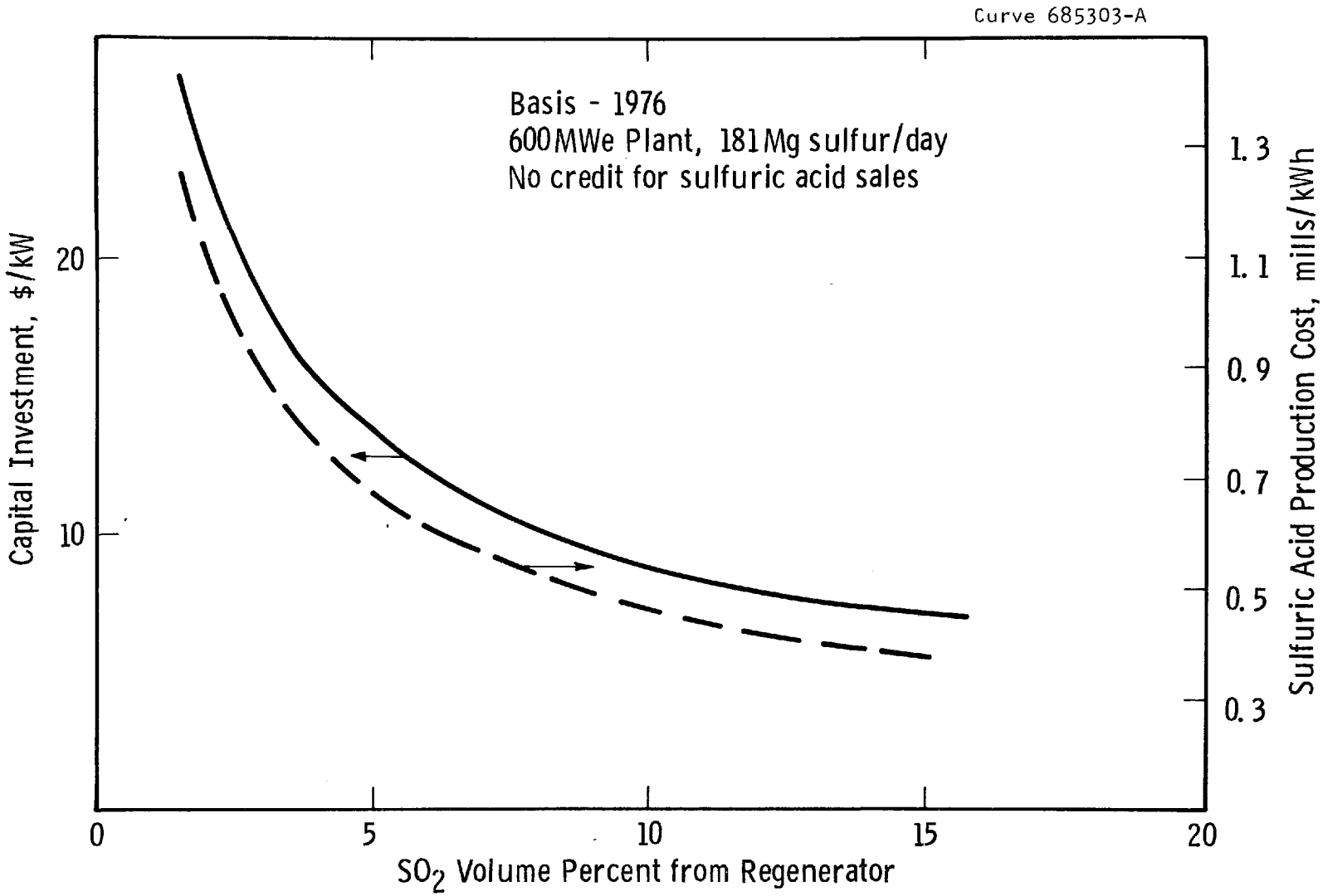

Figure 7. Concentrated Sulfuric Acid Production for the One-Step Regeneration Product Gas

Vendor contacts should be continued to develop more specific design requirements and performance information for the selected sulfur recovery processes.

CARBON DIOXIDE RECOVERY

A two-step sorbent regeneration scheme under evaluation involves reacting the sulfided sorbent with steam and CO_2 to generate the carbonate form of the sorbent and hydrogen sulfide gas:

$$CaS + CO_2 + H_2O \rightleftharpoons CaCO_3 + H_2S \quad .$$

The sulfided sorbent is produced in the sulfate reduction stage of the two-step regeneration process.

The consumed CO_2 must be replaced by recovering CO_2 from one of several potential CO_2 sources in the power plant. Figure 8 shows the CO_2 recovery options for the fluidized-bed combustion two-step regeneration process. The carbon dioxide in the regenerator acid-gas stream that is recycled from the sulfur recovery process to the regenerator may also require purification, depending upon the nature of the sulfur recovery process.

Commercial CO_2 recovery processes have been surveyed and economic projections generated to provide perspective on the process requirements, options, and potential problem areas. The results provide a basis for the preliminary evaluation of regeneration processes and also the potential of alternative sorbents.

Conclusions

- Well-developed technology is available for the recovery of CO_2 from various sources within the power plant. The hot carbonate processes appear to be the most promising.
- The CO_2 recovery investment appears to be acceptable if only the stoichiometric CO_2 usage plus minor losses must be recovered. The sulfur recovery process must not extensively contaminate the circulating CO_2 stream.

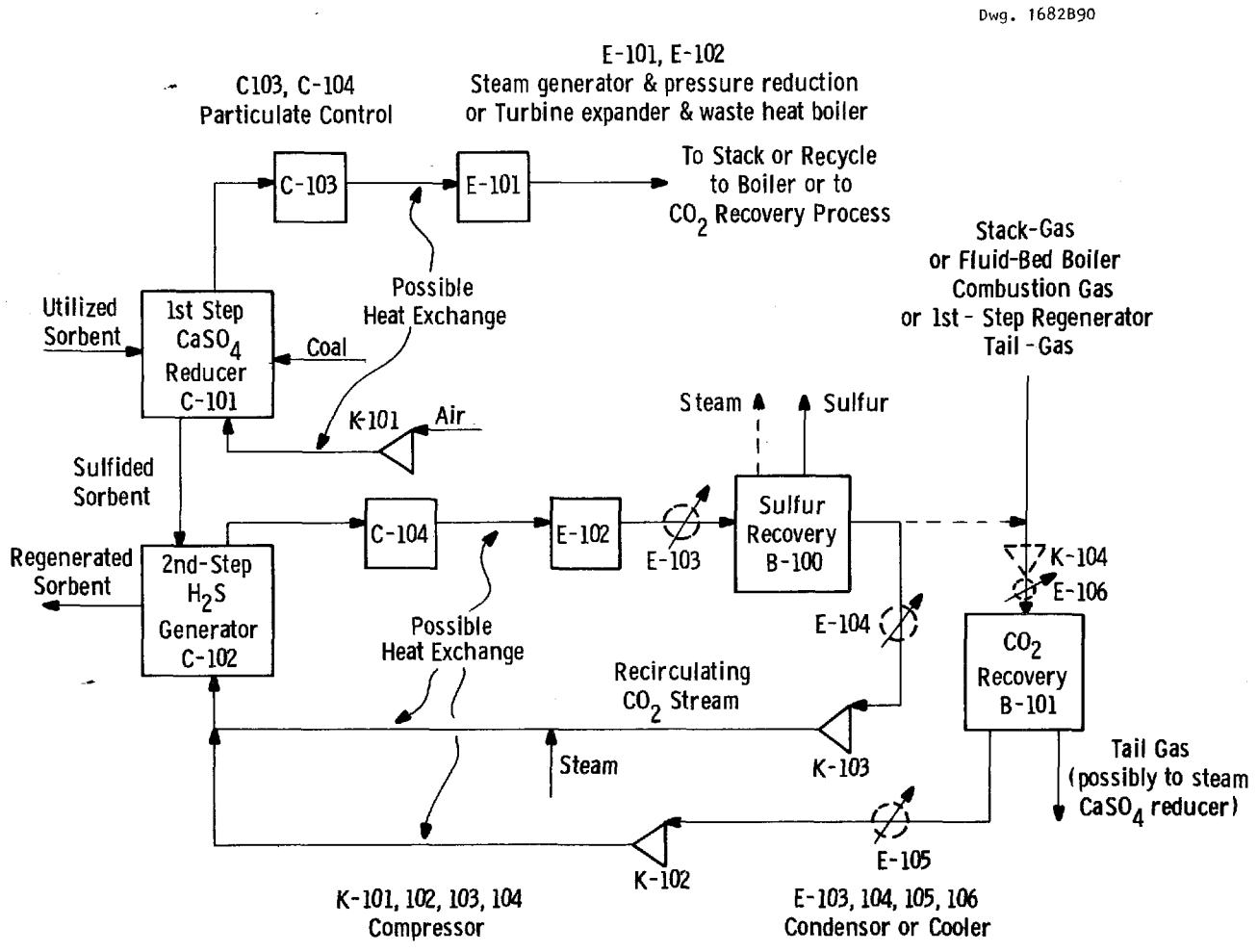

Figure 8. Two-Step Regeneration Process Options

- The power requirements and investment for stack-gas compression (the most likely source of CO_2) is largely dependent upon the stack-gas CO_2 content and the coal sulfur content and may be a very significant cost.
- An overall power plant optimization is required to minimize investment and maximize energy utilization. Vendor contacts should be initiated to gather more detailed information.

Rate of CO_2 Consumption

The rate of CO_2 consumption in the two-step regeneration process for fluid-bed combustion is proportional to the sulfur content of the coal fueling the power plant. This rate, based on reaction stoichiometry, is shown in Figure 9 as a function of the coal sulfur content and the coal heating value. For 3 mole percent of H_2S gas produced in the H_2S-generator step (the expected value based on kinetics and thermodynamics), the rate of CO_2 circulation to the sulfur recovery process is about 16 times the CO_2 recovery rate based on the reaction stoichiometry. Thus, any contamination of the recirculating CO_2 stream in the sulfur recovery step or any losses of CO_2 during recirculation could greatly increase the required CO_2 recovery rate.

The assumptions applied for this study are that losses result in a 10 percent increase in the CO_2 recovery rate, while contamination to the recirculating CO_2 stream is negligible (i.e., a Stretford process or liquid-phase Claus process is used for sulfur recovery).

CO_2 could be reclaimed from the power plant stack gas, from the fluid-bed boiler hot combustion gases and/or from the first-stage regenerator tail-gases (Figure 8). The fluid-bed boiler hot combustion gases and the first-stage reactor tail-gases are under pressure (1000-1500 kPa) and might not require compression prior to CO_2 recovery, but the ambient stack gas would require compression. It is assumed that CO_2 will be recovered from the power plant stack gas. The applicability of other sources depends upon overall material balances. The cost of stack-gas

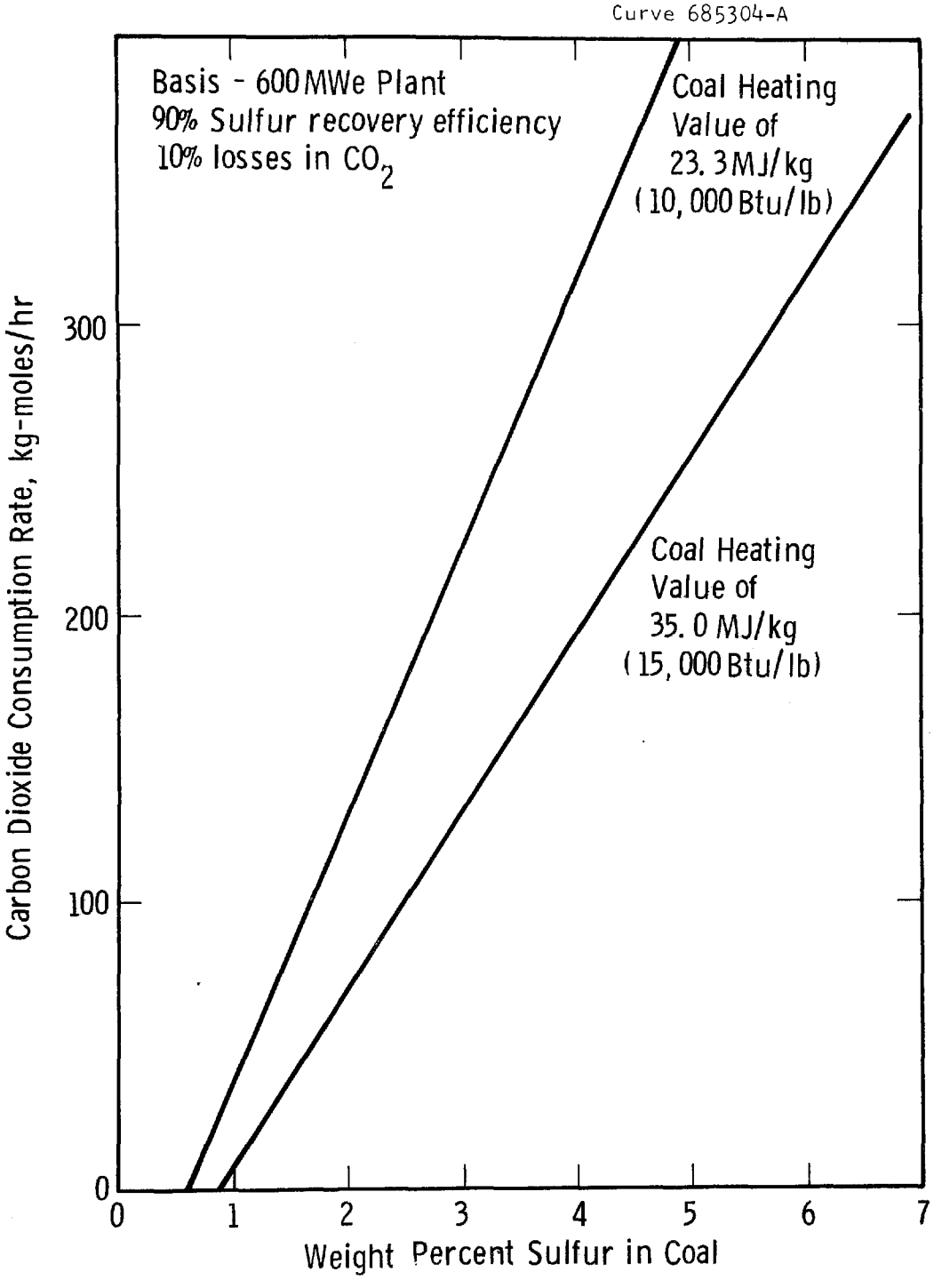

Figure 9. Carbon Dioxide Consumption Rate

compression and CO_2 recovery are considered separately. Other options will be considered in more detail with the evaluation of the overall process design.

The CO_2 content of the stack gas for the pressurized fluidized-bed combustion systems under study are assumed to be: pressurized boiler, 8.5 to 15 vol %; adiabatic combustor, 4 vol % CO_2.

Commercial CO_2 Recovery Options

A general process flow diagram for a CO_2 recovery process is shown in Figure 10. Other process arrangements are also used. Numerous commercial processes of this type have been developed, both of the chemical and physical absorption categories. The most widespread methods have been based on water scrubbing (physical absorption - not commonly applied today), MEA scrubbing, and hot potassium carbonate (Benfield process, Giammarco-Vetrocoke, Catacarb, Carsol, etc.).[29] Commercial processes are listed in Table 3. It appears that the hot carbonate processes are best suited for this application.

Economics of Carbon Dioxide Recovery

The capital investment (direct cost) for CO_2 recovery from stack gas has been projected for a recovery rate of 181 kg-moles CO_2/hr. This is a medium recovery rate for a 600 MWe power plant, depending on the coal sulfur content (see Figure 9). Operating costs and utility charges (power, chemicals, steam, fuel, and cooling water) are not projected.

Figure 11 shows the investment for a hot carbonate-type CO_2 recovery process in $/kW as a function of the CO_2 recovery efficiency. The CO_2 partial pressure to the absorber is a parameter in the figure. Investments are on the order of $1 to 2/kW, and a 0.6 power factor should be used to scale the costs to other CO_2 capacities.

Figure 12 relates the investment to the CO_2 partial pressure for a fixed CO_2 recovery efficiency of 90 percent. The investment increases steeply as the CO_2 partial pressure drops below 200 kPa.

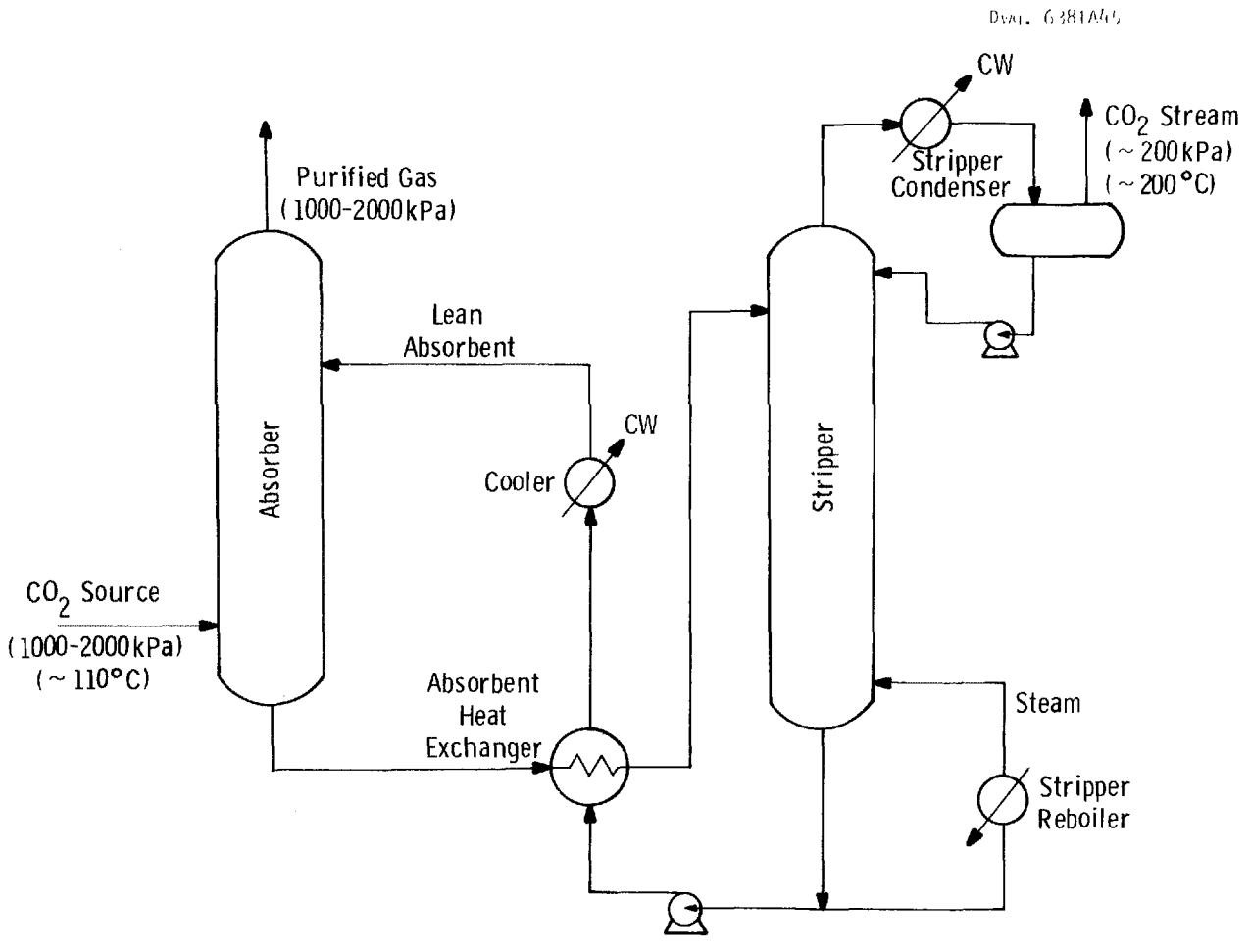

Figure 10. Carbon Dioxide Absorption Process

TABLE 3. A LIST OF CO_2-RECOVERY PROCESSES[30]

Licensor (Process)	Probable Absorbent
Allied Chemical (Selexol)	Dimethyl ether of polyethylene gycol plus an alkanolamine
BASF	Alkazid
BASF	Triethanolamine
Benfield	Hot potassium carbonate solution plus an activator
Eickmeyer (Catacarb)	Hot potassium carbonate solution plus an activator
Carbochimique (Carsol)	Hot potassium carbonate solution plus an activator
Giammarco (Vetrocoke)	Potassium arsenite solution plus an organic activator
Linde-Lurgi (Rectisol)	Methanol
Lurgi (Purisol)	N-methyl-2-pyrrolidone
Fluor	Propylene carbonate
Shell (Sulfinol)	Tetrahydrothiophene plus an alkanolamine
Union Carbide (U-CAR)	Monethanolamine plus an activator

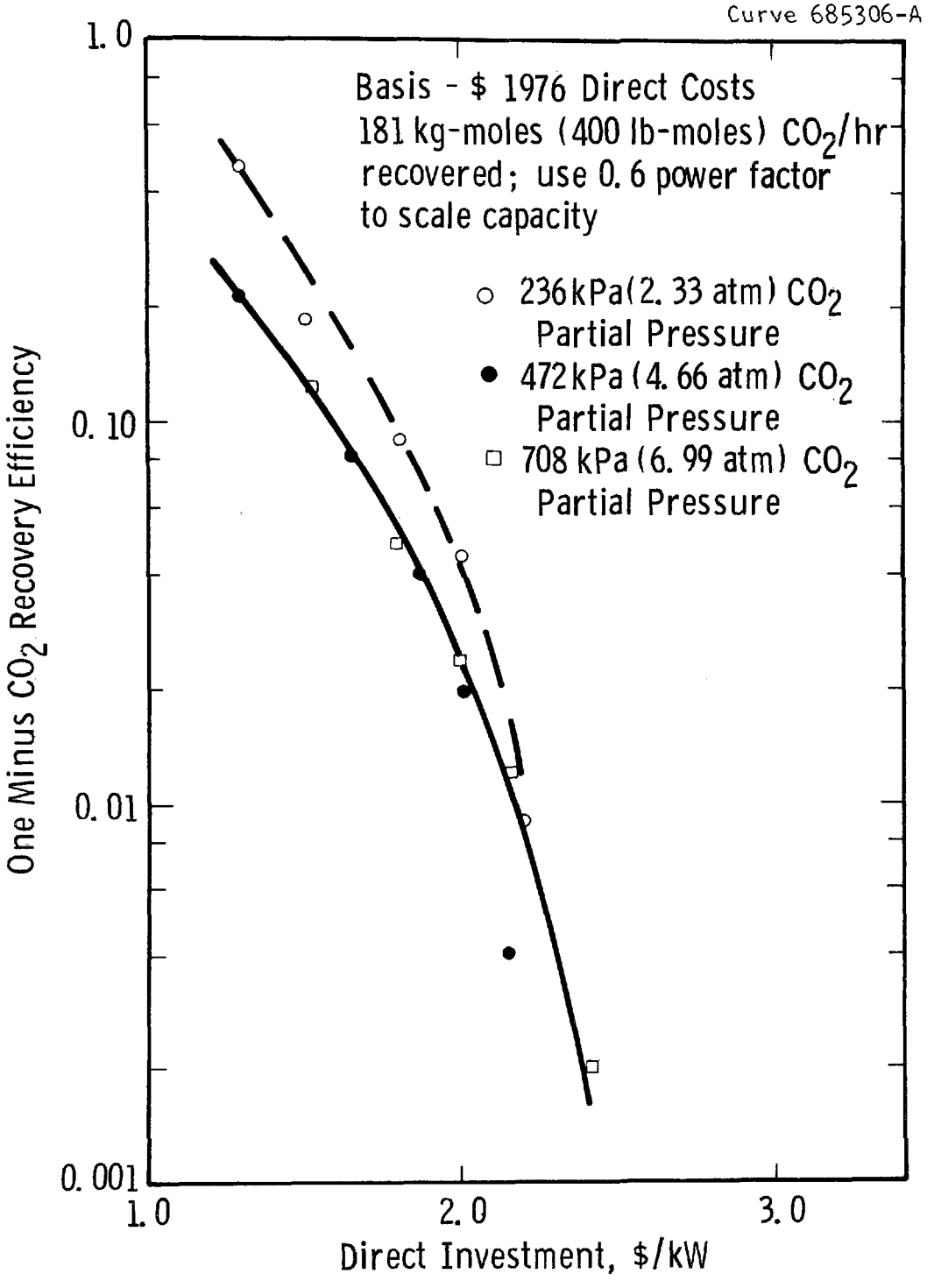

Figure 11. Carbon Dioxide Recovery Process Investment

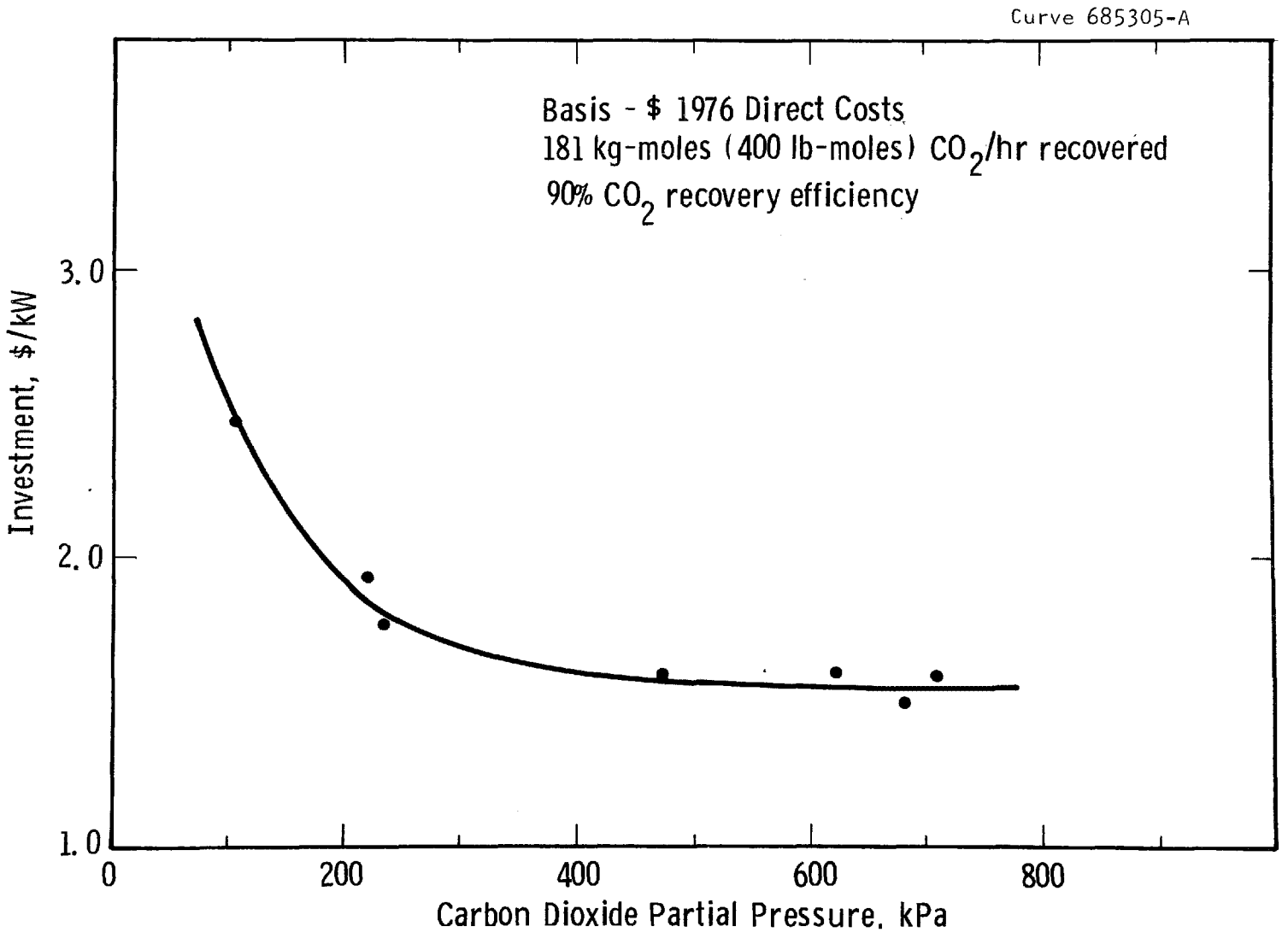

Figure 12. Carbon Dioxide Recovery Process Investment

The investment and power requirement for stack-gas compression is considered independently in Figure 13 as a function of the stack-gas pressure and the stack-gas CO_2 content. The investment for stack-gas compression may exceed that for the CO_2 recovery process. For the adiabatic combustor case and the coal gasification case, the power requirement may be between 5 and 10 percent of the total power plant output, an unacceptably high power usage unless this energy is recovered at some point in the process.

Some optimum combination of stack-gas compression ratio and CO_2 recovery efficiency must exist in terms of total capital expenditure and power requirement, but is not determined in this study. Table 4 lists the investment projections for CO_2 recovery and the investment and power requirement for stack-gas compression for three coal sulfur contents and the stack-gas CO_2 contents representative of fluid-bed boilers, adiabatic combustors, and coal gasification. The adiabatic combustor case and the coal gasification case (4 percent of CO_2 in stack gas) could require a large investment and huge power usage.

SORBENT CIRCULATION

The regenerative operation of fluidized-bed combustion power plants calls for the circulation of sorbent material between the fluidized-bed combustor and the regenerator vessel. The sorbent (limestone or dolomite based) must circulate at a rate that satisfies the desulfurization and regeneration reaction rates. The circulation system must meet all of the power plant requirements. Numerous techniques are available or have been proposed for transporting solids that may be applicable to fluidized-bed combustion plants. These techniques are reviewed and assessed in terms of the system requirements. Recommendations and cost projections are developed.

Sorbent Circulation System Requirements

Table 5 lists the required characteristics and desirable characteristics that may be used to judge alternative transport techniques.

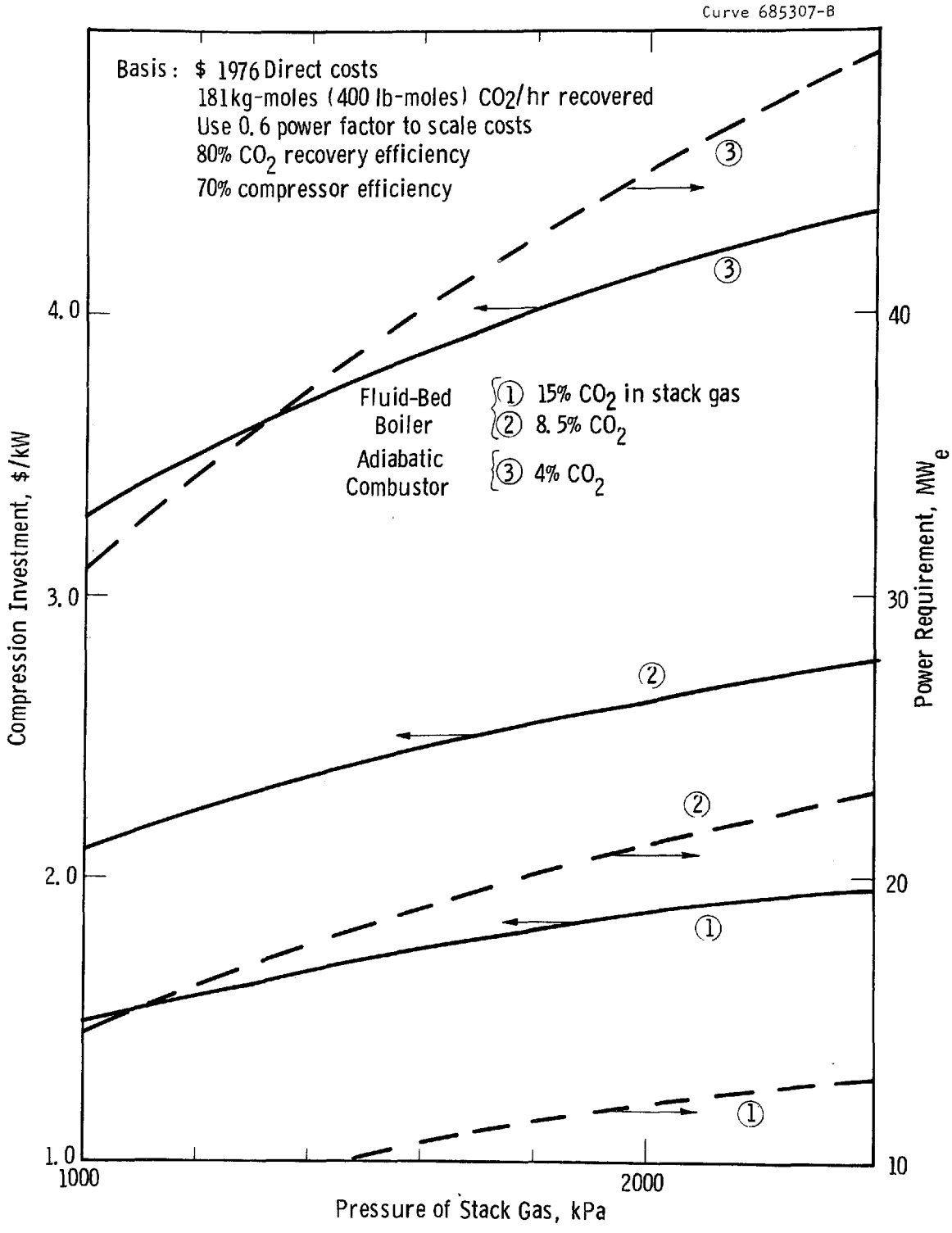

Figure 13. Power and Investment for Stack Gas Compression for CO_2 Recovery

TABLE 4. ECONOMIC PROJECTIONS FOR CO_2 RECOVERY FROM STACK GAS

Coal Sulfur Content (wt %)	CO_2 Recovery Rate (kg-moles/hr)	CO_2 Recovery Investment ($/kW)			Stack Gas Compression Investment ($/kW) and Power (MWe)		
		Stack Gas CO_2 Content			Stack-Gas CO_2 Content		
		15%	8.5%	4%	15%	8.5%	4%
2	100	1.3	1.4	1.8	1.2 $/kW (5.5 MW)	1.8(11.6)	3.1(27.6)
3.5	220	2.0	2.3	2.8	2.0(12.2)	3.0(25.5)	5.0(60.8)
5	340	2.7	3.0	3.7	2.5(18.9)	3.8(39.4)	6.4(94.0)

Basis:

600 MWe power plant

80% CO_2 recovery efficiency

15% CO_2 stack gas compressed to 1500 kPa
8.5% CO_2 stack gas compressed to 2000 kPa } Fluid-bed boiler

4% CO_2 stack gas compressed to 2500 kPa } Adiabatic combustor or coal gasification

TABLE 5. REQUIRED AND DESIRED CHARACTERISTICS

Required System Characteristics

1. Must transport sorbent material of specific size distribution at the required rate and at the required process conditions (temperature, pressure, environment) between the combustor and regenerator modules

2. Must distribute the regenerated sorbent uniformly to the multiple beds of the combustor

3. Must maintain specific bed depths within the combustor and regenerator (in combination with the spent sorbent withdrawal system and the fresh sorbent feeding system) within acceptable limits

4. Must be operable over a range of sorbent flow rates permitting plant turndown, operation with alternative fuel or sorbents, and plant start-up, shutdown, and maintenance

5. Must respond to load changes sufficiently fast as not to limit the power plant performance (power demand, environmental impact, etc.).

6. Must not reduce the power plant reliability - occurrences such as agglomeration, plugging, erosion, corrosion, thermal stress, valve malfunctions, etc., must have an acceptably low rate

7. Sorbent attrition or other losses occurring in the circulation system must be significantly less than the sorbent attrition and losses which occur in the balance of the plant

8. The operation and functions of the combustor and regenerator must not be disrupted by the circulation system - excessively high transport gas rates (causing large bubbles, erosion to internals, heat balance overloads, dilution of product gases, etc.) or periodic transport rate fluctuations (causing periodic fluctuations in reactor performance, etc.) must be absent.

9. Must comply with plant safety requirements

10. Must result in acceptable cost - capital investment, operating cost, power requirement, transport gas rate, maintenance, etc.

TABLE 5. (Continued)

Desirable System Characteristics

1. Should provide a gas seal between the combustor and regenerator

2.* Should not require accurate control of combustor and regenerator pressure difference

3. Should not dictate the vessel design, arrangement, and plant layout - should not require minimum vessel separation

4. Should not dictate plant turndown, shutdown, start-up procedures

5. Should permit injection of the sorbent into the beds at any specific point (or multiple points if required) rather than dumping sorbent on the bed surface

6. Should result in minimum sorbent attrition

7.* Should not require inert transport gas other than plant stack gas or other available tail-gases

8. Should not require separation of transport gas from sorbent before injection of the sorbent into the combustor or regenerator

9.* Should eliminate high maintenance moving parts - high-temperature valves, high-temperature feeders

10. Should minimize number of components such as hold vessels, lock-hoppers, cyclones, solids coolers, etc.

11. Should minimize length and diameter of high-temperature piping

12. Should permit inspection and flow rate measurement

13.* Should represent commercial technology

14.* Should result in minimum cost

*Most important.

The ten requirements represent items that must be satisfied for a circulation technique to be considered a possible candidate. The 14 desirable characteristics represent items that are not absolute musts but are used to judge between the candidate techniques that satisfy the system requirements. The desires considered most important are so indicated.

Techniques for Transporting Solids

Numerous techniques for transporting solids have been developed or proposed. These techniques are listed in Table 6. While some of these techniques are capable of realizing a complete circuit between the combustor and regenerator, most are physically restricted only to horizontal or to vertical transport (upward or downward) and must be used in combination with several techniques.

TABLE 6. SOLIDS TRANSPORT TECHNOLOGIES

Mechanical (bucket elevator, conveyor belt, screw conveyor, etc.)
Vibrational
Dilute - Phase Pneumatic
Induced
Forced
Dense - Phase Pneumatic
Dense-phase riser
Dense-phase lateral
Horizontal dense-phase
Dense-phase standleg
Plug flow
Extrusion flow
Mass continuous flow
Pulsed flow
Fluidized conveyor
Fluidized lateral lift
Bulk flow (non-air-assisted)

Mechanical methods of transport, either vertical or horizontal, at ambient temperature and pressure, are widely practiced.[31] They were applied to the circulation of high-temperature solids (∿649°C) in early versions of catalytic crackers but were entirely abandoned in favor of the more reliable pneumatic transport methods.[32]

Solids transport by vibration is a relatively new technique finding wide application for transporting and distributing materials under ambient conditions over relatively short horizontal distances.[33] Particle attrition and dusting are very low, and feeding is very uniform over a wide operating range. Vendor contact has indicated that vibrational methods may be utilized at high temperature and pressure.[34]

Dilute-phase pneumatic transport methods are based on the ability of a dilute gas-solid suspension to be transported with ease throughout complex circuits. Operating velocities are high (>15 m/s), gas rates are high, and pressure drops are low. Particle attrition and transport line erosion are expected to be more of a concern than with alternative techniques. Dilute-phase pneumatic transport is the most highly developed and applied method presently used for transport at ambient conditions. The use of the technique at high-temperature and -pressure conditions does not face any practical restrictions. The phenomenon has been described, and practical design methods are available.[31,35,36]

A variety of dense-phase pneumatic transport methods is available. Dense-phase pneumatic transport is defined as pneumatic transport of solids at gas-to-solids ratios too low for the stable, entrained transport characteristic of dilute-phase transport. By inference, this results in lower velocities, less transport gas, and higher pressure drops with less particle attrition and transport-line erosion.

The dense-phase standleg is simply a vertical pipe in which a dense gas-solid suspension flows downward by the influence of gravity. The suspension is aerated to the degree required to provide fluidized

behavior (i.e., ease of flow, pressure drop per unit length approximately equal to the suspension bulk density). Industrial experience at high temperature and pressure (mostly with cracking catalyst materials) is abundant;[32,37-39] lateral standlegs have also been studied.[40]

The dense-phase riser is a vertical transport line that carries solids upwards and operates at a bulk density higher than would be stable in dilute phase vertical transport. The line may operate in a slugging or a more stable fashion due to the presence of packing in the line.[38,41,42]

Dense-phase lateral and horizontal transport may be utilized to connect standlegs and risers or to connect fluidized beds directly. The flow may be smooth for materials that maintain an aerated state or periodic or nonstable for materials that deaerate quickly. In either case, periodic injection points for aeration gas are required.[43-45]

Transport techniques that utilize the tendency for dense gas-solid suspensions to form stable plugs transportable over long distances have been called plug flow transport.[46,47] Such systems are commercially available at relatively small capacities and ambient conditions. A high-temperature system (atmospheric pressure) has been operated on a pilot-plant scale and designed for a demonstration plant.[48] The technique normally requires lockhoppers and high-temperature valves.

Extrusion flow is a special case of dense-phase transport restricted to solids having a special set of properties.[49] Extrusion flow permits the stable transport of a gas-solid suspension throughout a complex circuit at bulk densities very near the packed-bed value without special design considerations. Extrusion flow has not been commercially demonstrated for any material.

Extrusion flow behavior may be achieved for any material by the application of a special hardware design resulting in mass continuous flow. The method is described in the patent literature and requires complex lockhopper systems;[50-52] it has not been applied industrially.

A method that utilizes aspects of the dense-phase standleg and horizontal dense-phase transport in combination is identified as the pulsed-flow technique. In this method the rate of solids transport through a dense-phase horizontal line that is fed by a dense-phase standleg is controlled by the rate of pulsing of horizontal transport-gas jets. The method has been utilized at high temperature on pilot-plant scale and is being studied on a cold model facility of about 25 Mg/hr capacity.[48]

The fluidized-bed conveyor is a commercial system (Fuller Co. Air-slide Fluidizing Gravity Conveyor) that uses the fluidlike behavior of a fluidized bed to promote horizontal (about 5° angle with horizontal) transport of solids over long distances at high solid-to-gas ratios.[53-55] While only applied to ambient situations, the high-temperature and pressure application should be technically feasible.

Other techniques are being explored on the laboratory scale and have no large-scale experience. For example, a fluidized lateral lift that utilizes the splash behavior of fluidized beds to transport solids laterally upward has been studied.[56]

Finally, bulk flow techniques have been applied generally for dumping and draining bins and hoppers. These methods are not of significance to transport systems except as possible holding or surge stages of the system.

Table 7 lists the transport characteristics of the various transport techniques with respect to their directional capabilities. Figure 14 illustrates the transport techniques conceptually to represent their key points. Figure 15 illustrates a variety of dense-phase transport methods.

Plant and Transport System Layouts

A number of layouts could be proposed that would simplify the sorbent circulation system. For example, the combustors could be placed directly beneath the regenerator vessel or the regenerator directly below the combustor to simplify the sorbent flow path. The regenerator

TABLE 7. DIRECTIONAL CAPABILITIES OF THE TRANSPORT METHODS

	Vertical Flow Upward	Vertical Flow Downward	Horizontal Flow	Lateral Flow Upward	Lateral Flow Downward
Mechanical	X	X	X	X	X
Vibrational			X		
Dilute Pneumatic	X	X	X	X	X
Dense Pneumatic					
Horizontal dense			X	X	X
Dense riser	X			X	
Standleg		X			
Mass continuous	X				
Fluidized conveyor			X		
Bulk flow		X			X
Fluidized lateral lift				X	
Extrusion flow	X		X	X	
Plug flow	X	X	X	X	X
Pulsed flow			X		

vessel might be separated into numerous individual vessels, one for each combustor bed, and placed in close proximity to each combustor bed to simplify sorbent distribution and control complexities. Concepts that place the regenerator bed as an integral part of the combustor bed and utilize an internal circulation scheme might also be applied. The petroleum industry has shown historically that optimization of the catalytic cracker-regenerator layout is very important to the economics of catalytic cracking.[32] For the specific case of fluidized-bed combustion it appears that such layout optimizations will be less effective: the combustor economics require multiple modules with four or five separate beds stacked vertically, resulting in a tall pressure shell. The regenerator vessel is expected to be very small, compared to the combustor, and much lower in elevation. Thus, it seems that the most economic plant would be based upon a highly flexible sorbent circulation system that carries sorbent between a

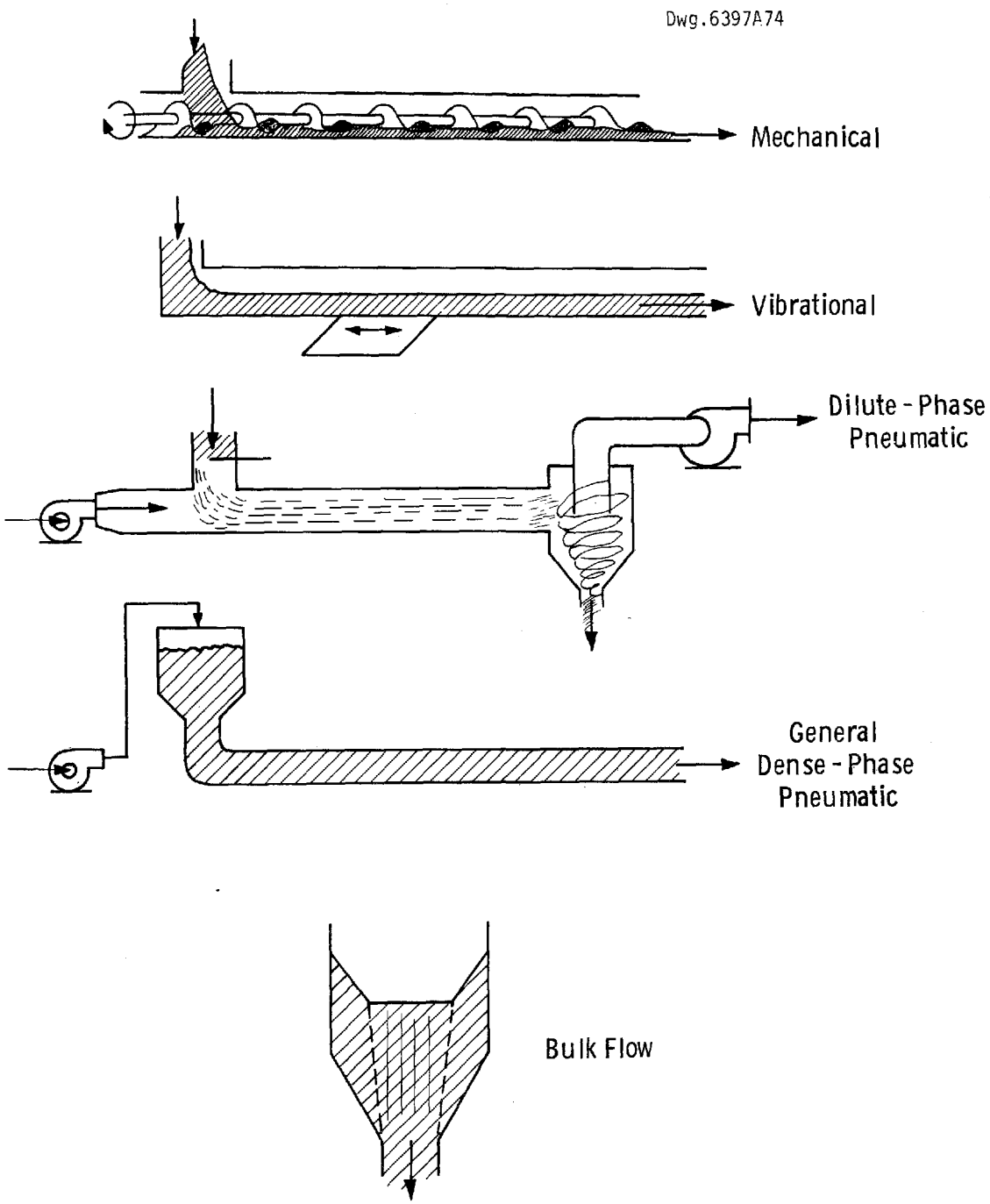

Figure 14. Solids Transport Techniques

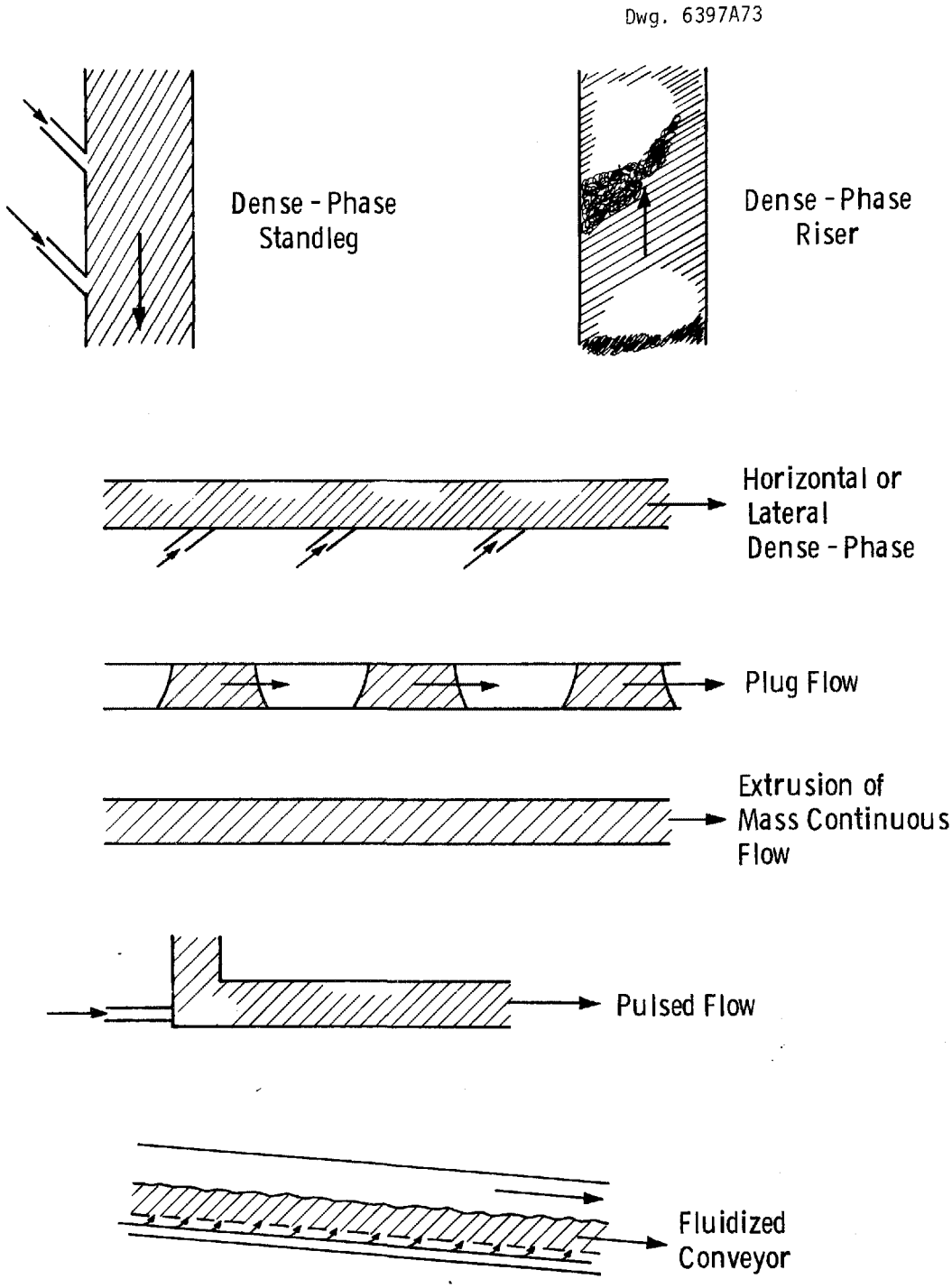

Figure 15. Dense-Phase Solids Transport Techniques

combustor and a regenerator whose locations are based on minimum capital investment and maintenance cost. Such a sorbent circulation system must be capable of transport in all directions (downward, upward, laterally) and must consist of a combination of the techniques listed in Table 7.

Evaluation of Transport Techniques

The sorbent transport techniques considered are ranked with respect to their ability to meet the system requirements and desirable characteristics in Table 5. This ranking is shown in Table 8. Five of the techniques do not satisfy the basic system requirements and are not considered further. The mechanical method is expected to be too unreliable for use. The mass continuous and bulk flow techniques are also believed to be too unreliable for use as elements of the sorbent circulation system. Fluid lateral lift is expected to provide slow response to power plant demand, and the extrusion flow technique is not physically applicable to solids having the properties of the sorbent materials.

The ranking is based on the desirable characteristics for the remaining eight techniques. Ranked as most attractive are the following: dilute-phase pneumatic transport, dense-phase riser, and dense-phase standleg. Only the dilute-phase pneumatic transport technique can be applied alone to provide a complete sorbent circulation system. The dense-phase pneumatic techniques must be used in combinations and would require complex equipment to act as interfaces between the various system elements (e.g., high-temperature feeders, lockhoppers, valves, etc.). Realistically, the dilute-phase pneumatic transport technique is the most suitable for the presently conceived fluidized-bed combustion power plant. Optimization of fluidized-bed combustion after initial commercialization may result in the application of a dense-phase pneumatic transport method.

TABLE 8. COMPARISON OF TRANSPORT TECHNOLOGIES

	Requirements (Table 5)										Desirable Characteristics (Table 5)														Rank
	1	2	3	4	5	6	7	8	9	10	1	2	3	4	5	6	7	8	9	10	11	12	13	14	
Mechanical	P	Y	Y	Y	Y	N																			
Vibrational	Y	Y	Y	Y	Y	Y	Y	Y	Y	P	P	Y	P	Y	P	Y	Y	Y	N	Y	P	Y	P	P	2
Dilute Pneumatic	Y	Y	Y	Y	Y	Y	P	P	Y	Y	Y	Y	Y	Y	Y	P	Y	P	P	P	P	N	Y	P	1
Dense Pneumatic																									
Horizontal	Y	Y	Y	Y	Y	Y	Y	P	Y	Y	P	P	P	Y	P	Y	Y	Y	N	Y	P	N	N	P	4
Riser	Y	Y	Y	Y	Y	Y	Y	Y	Y	Y	Y	Y	Y	Y	Y	Y	Y	Y	Y	Y	P	N	Y	P	1
Standleg	Y	Y	Y	Y	Y	Y	Y	Y	Y	Y	Y	Y	Y	Y	Y	Y	Y	Y	Y	Y	P	N	Y	P	1
Mass continuous	Y	Y	Y	Y	Y	N																			
Fluid conveyor	Y	Y	Y	Y	Y	Y	Y	Y	Y	Y	P	P	P	Y	P	Y	Y	N	N	Y	P	Y	P	P	2
Bulk flow	Y	Y	Y	Y	Y	N																			
Fluid lateral lift	Y	Y	Y	P	N																				
Extrusion	N																								
Plug	Y	Y	Y	Y	Y	P	Y	P	Y	Y	Y	Y	Y	Y	Y	Y	Y	Y	N	N	P	N	P	P	3
Pulsed	Y	Y	Y	Y	Y	Y	Y	P	Y	Y	P	P	N	Y	Y	Y	Y	Y	Y	Y	P	N	N	P	4

Y ≡ Satisfies item
N ≡ Does not satisfy item
P ≡ Possibly satisfies item

Sorbent Circulation Rates

In order to estimate probable sorbent circulation rates, simple material balances may be developed to give

$$R = \frac{W_s}{32} \frac{\left\{\eta - mX_S^R\right\}}{X_S^B - X_S^R}$$

where R is the rate of sorbent circulation in moles of calcium per unit mass of coal fed to the combustor, W_s is the weight fraction of sulfur in the coal, η is the sulfur removal efficiency of the combustor, m is the molar makeup rate of fresh sorbent to the combustor, X_S^R is the calcium utilization of the sorbent in the regenerator, and X_S^B is the calcium utilization in the combustor.

The sulfur removal efficiency is dependent upon the sulfur content of the coal, and the sulfur emission standard which must be satisfied. The sorbent makeup rate is dependent upon the required sulfur removal efficiency, the combustor and regenerator deactivation performance and attrition bases, etc. For the present projections M is assumed to be equal to 0.75 moles Ca/mole sulfur fed for a sulfur removal efficiency of 0.85 and is assumed to be directly proportional to η:

$$m = 0.882\ \eta \quad .$$

The rate of coal fed to the combustor is determined by the plant size (MWe), the coal heating value, and the plant heat rate. For a 600 MWe power plant with a 9500 kJ/kWh plant heat rate and a coal heating value of 35 MJ/kg, the coal feed rate is 163 Mg/h. The molecular weight of sulfated limestone is assumed to be 84 g/g-mole of calcium, and the molecular weight of sulfated dolomite is assumed to be 136 (assuming the presence of no inerts and a molar ratio of calcium to magnesium of 1).

Figure 16 shows the rate of sorbent circulation as a function of coal sulfur content, with $X_S^B - X_S^R = 0.1$ and $X_S^R = 0.25$ for limestone and

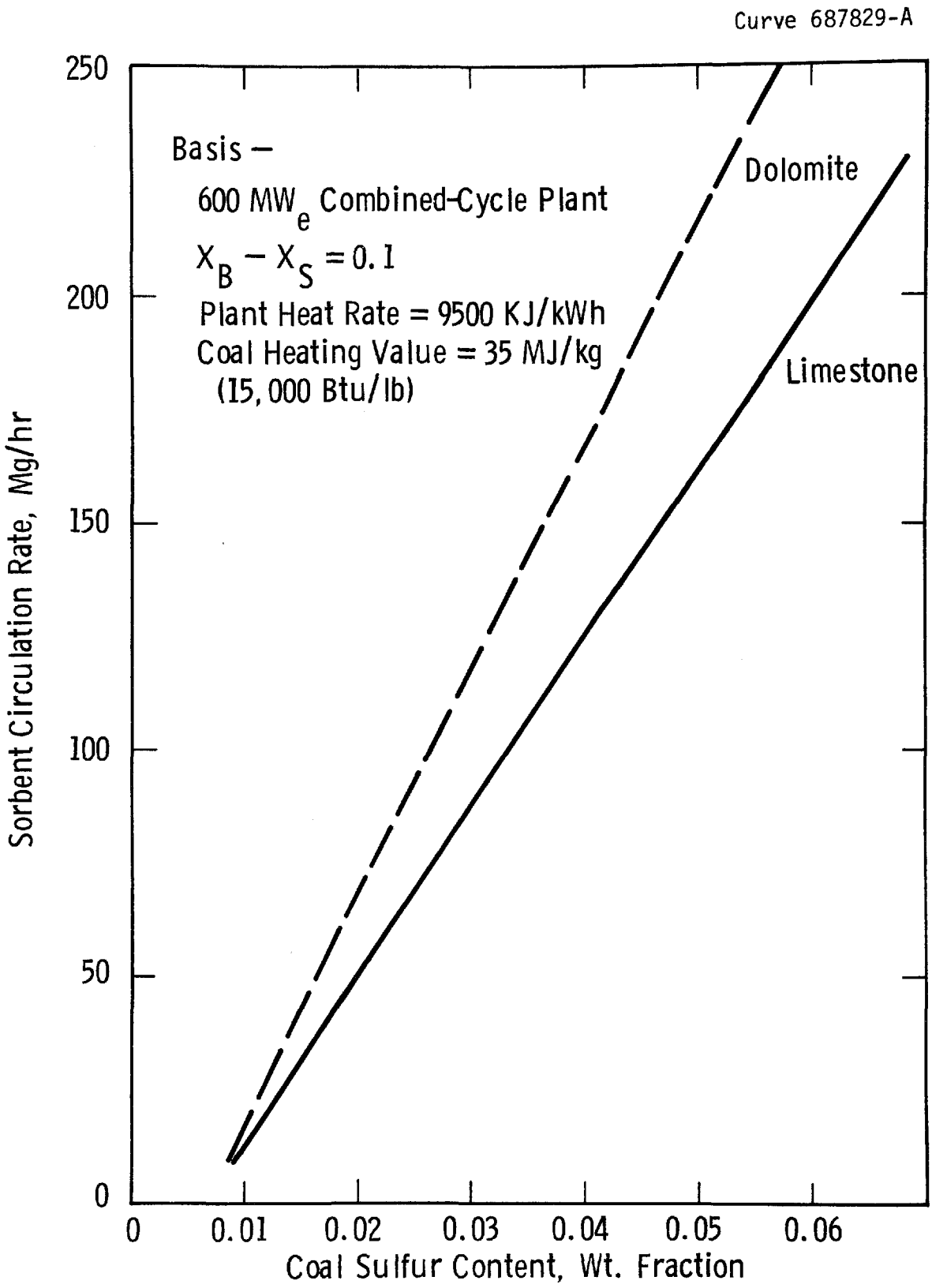

Figure 16. Sorbent Circulation Rate Projection

$X_S^R = 0.40$ for dolomite. The rate is inversely proportional to the difference $X_S^B - X_S^R$. The rate will be slightly greater for an atmospheric-pressure system than for a pressurized system due to the lower plant heat rate in the pressurized case (all other factors being identical).

Ash will also be present in the circulating sorbent stream but should be a small contribution and is neglected.

Cost Projections

The capital investment for a dilute-phase pneumatic sorbent circulation system is estimated as a function of the sorbent circulation rate and based on the following assumptions:

- 600 MWe power plant with four fluidized-bed combustion modules, four combustion beds per module and a single regenerator vessel per module located at grade elevation 30 m from the combustor.
- One hold vessel per module is included in the circulation system to handle surges, for system control, and for start-up and shutdowns. The vessel is assumed to be 1.5 m by 3 m tall. One distribution vessel per module is placed after the regenerator to distribute the sorbent flow uniformly to the four streams returning to the four combustor beds.
- Four dense-phase standlegs carry sorbent from the four combustor beds to the hold vessel at 0.3 m/s. A total piping length of 80 m is assumed for the dense-phase lines per combustor module.
- A single dilute-phase pneumatic transport line per combustor module carries the sorbent 50 m from the hold vessel to the regenerator.
- Four dilute-phase pneumatic transport lines per combustor module carry the sorbent from the distribution vessel back to the four combustor beds. A total of 130 m of piping per module is required.
- Two compressors are required per module, one for each circulation step (combustor-to-regenerator and regenerator-to-combustor).

Air may be used for transport gas, and no separation stage is required for the sorbent and transport gas. The gas-solid suspension may be fed directly to the regenerator and combustor.

- The transport lines are refractory-lined carbon steel pipe, with 20 cm of refractory and insulation required. Piping costs are taken from a previous study of high-temperature low-Btu gas piping.[48]

The equipment included in the sorbent circulation system cost estimate are the air compressors, the hold vessels and distribution vessels, and the piping system. The piping system includes carbon steel pipe; refractory flanges; hangers; supports; and structures and labor for erection, fabrication, and testing.

Costs are reported as direct costs in 1976 dollars. Results are shown in Figure 4 for both the atmospheric-pressure and pressurized systems in $/kW. The piping cost represents about 70 percent of the total capital investment. About 1000 m of high-temperature piping is required because of the need to account for thermal expansion and vibration. The main difference between the atmospheric-pressure and pressurized systems is in the cost for transport air compressors. Power requirements are not large as long as the transport air is efficiently used for coal combustion in the combustor and regenerator.

The sorbent circulation system cost is not strongly sensitive to the separation between the combustor and regenerator vessels. Decreasing the separation distance from 30 m to zero separation would only reduce the total piping length by about 35 percent. Based on Figures 16 and 17, for a typical high-sulfur coal the capital investment for the sorbent circulation system should be about $12/kW for the pressurized system and $10/kW for the atmospheric-pressure system. This cost is higher than that previously estimated for the sorbent circulation system.

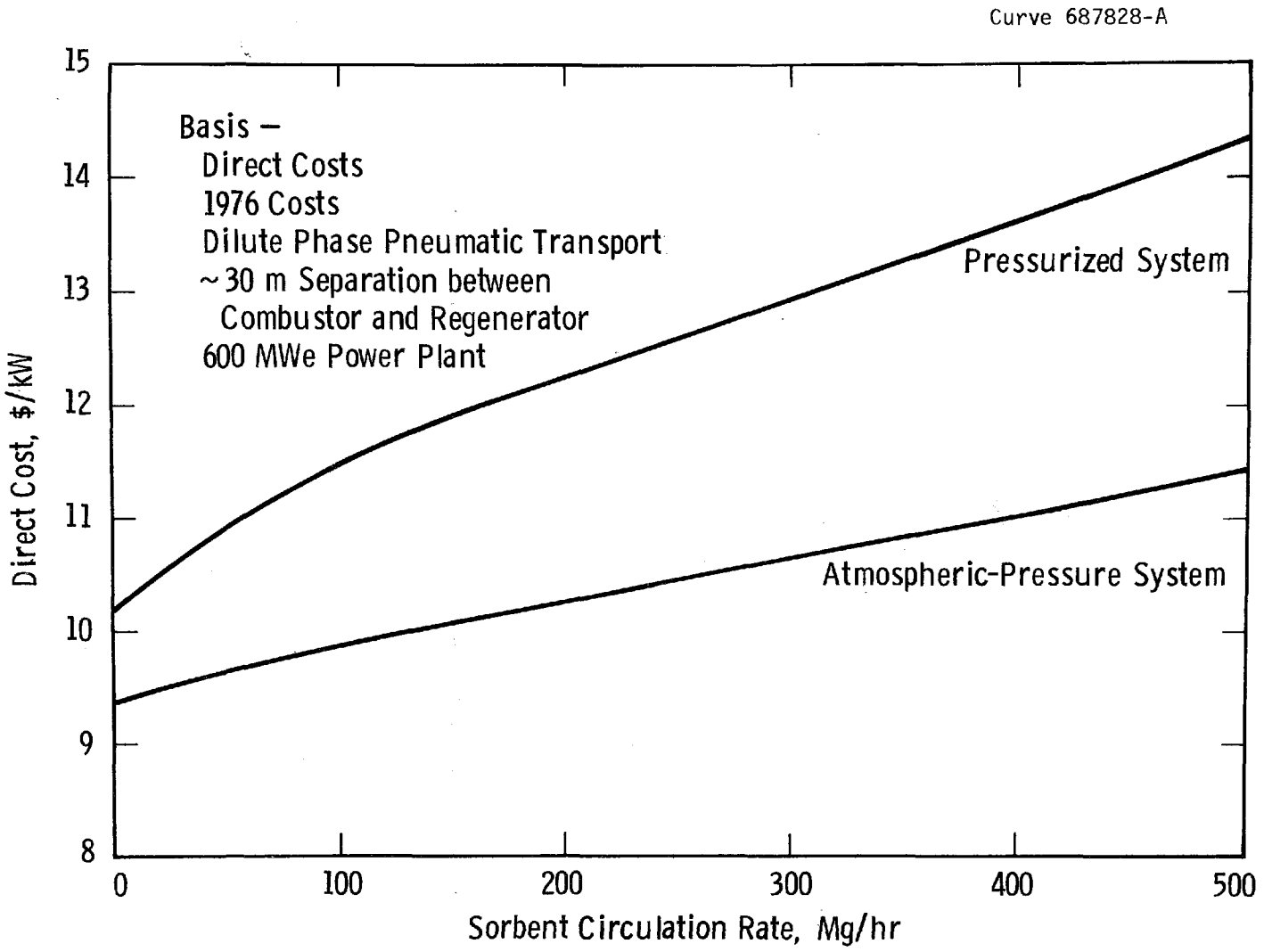

Figure 17. Capital Investment for Sorbent Circulation System

SECTION 5

REGENERATION FOR ATMOSPHERIC-PRESSURE FLUIDIZED-BED COMBUSTION

The one-step reductive decomposition of calcium sulfate is recommended as the most attractive regeneration process for fluidized-bed combustion systems operating at atmospheric pressure. An evaluation was completed to develop performance projections, cost estimates, and critical development requirements. A 635 MW plant was selected as a reference design.

PROCESS DESCRIPTION

The following reaction takes place in the one-step regenerative process involving the reductive decomposition of $CaSO_4$:

$$CaSO_4 + \begin{Bmatrix} H_2 \\ CO \end{Bmatrix} \rightleftharpoons CaO + \begin{Bmatrix} H_2O \\ CO_2 \end{Bmatrix} + SO_2 \quad .$$

The undesirable competing reaction involving the formation of CaS is the following:

$$CaSO_4 + 4\begin{Bmatrix} H_2 \\ CO \end{Bmatrix} \rightleftharpoons CaS + 4\begin{Bmatrix} H_2O \\ CO_2 \end{Bmatrix} \quad .$$

An oxidizing zone has to be provided in the regeneration vessel to convert CaS to $CaSO_4$ by the following reaction:

$$CaS + 2O_2 \rightleftharpoons CaSO_4 \quad .$$

In the regeneration process coal is introduced into a fluidized-bed vessel or regenerator for in-situ partial combustion to provide the reducing gas and the heat necessary for the reduction of $CaSO_4$ to CaO.

The regenerated sorbent is returned to the fluid-bed boiler, where fresh sorbent will be introduced to make up for reduced activity and losses of the sorbent by attrition and elutriation. Fresh sorbent could be introduced into the regenerator rather than to the combustor. Although the heat load on the regenerator increases, the possible advantage is a reduction in the trace element release (i.e., trace elements may be captured in the sulfur recovery process). The effect of regenerator operating conditions on sorbent calcination has to be examined. If the makeup ratio of Ca/S is small, as Argonne projected, the increase in heat load may be moderate. Part of the sulfated sorbent is discarded for disposal or utilization. The regenerator off-gas containing about 12 percent SO_2 at a temperature of 1100°C passes through primary and secondary cyclones and then exchanges heat with the incoming air to the regenerator before being processed in a sulfur recovery plant for the production of elemental sulfur. The circulation of the sorbent between the boiler and the regenerator is carried out pneumatically.

The important variables of the process are the process sulfur load (PSL) and the concentration of SO_2 in the regenerator effluent. The process sulfur load is the ratio of the amount of sulfur handled by the regenerative process to the amount of coal fed to the boiler and, hence, determines the scale of the process. It is given by the following equation:

$$PSL = W_s \ (\eta - m \ X_s^B) \quad ,$$

where W_s is the weight fraction of sulfur in the coal, η is the boiler sulfur removal efficiency, m is the Ca/S molar makeup ratio to the boiler, and X_s^B is the mole fraction of Ca as sulfate in the sulfated sorbent. The concentration of SO_2 in the regenerator effluent determines the size of the equipment and depends on the type of fuel used in the regenerator, temperature, pressure, heat losses, and the change in the utilization of calcium across the regenerator (i.e., the extent to which

sulfur is removed from the sorbent in the regenerator). In the present study only atmospheric pressure was considered, and coal was chosen as the fuel to be burned in the regenerator. The other variables of importance are the regeneration temperature and the extent of sorbent regeneration.

HEAT AND MATERIAL BALANCES

The design specifications and the design assumptions for this study are given in Table 9.

The technical and economic evaluation of the regeneration process is based on the available experimental data, the desirability and the feasibility of a particular option, the results of earlier studies on regeneration, and on the state of the art. The partial in-situ combustion of coal in the regenerator is an attractive option and, on the basis of preliminary experiments, seems to be feasible. The extent of regeneration of the sulfated sorbent is also assumed on the basis of the experimental data.[1,5] The experimental basis for many of the assumptions applied is limited and no directly applicable, steady-state data have been produced.

Regarding the sulfur recovery system, it is generally agreed that the production of elemental sulfur is more attractive for the power plants than is the production of sulfuric acid. The RESOX process,[58] under development by Foster Wheeler Energy Corporation (FWEC), appears to be more attractive than various other processes and, hence, has been chosen for the basic design.

A process flow diagram showing the various streams is given in Figure 18. For the sulfur recovery system a supplementary sulfur recovery process, such as the Beavon process developed by the Ralph M. Parsons Co.,[59] is required since the sulfur removal efficiency of the RESOX process is only about 80 percent. The reasons for selecting these two processes for the basic design are given later.

TABLE 9. DESIGN SPECIFICATIONS AND ASSUMPTIONS

Design Conditions:	
Boiler coal rate	240,408 kg/hr (635 MWe)
Emission standard for SO_2	516 ng/J; current NSPS
Basis for boiler design	Westinghouse report of 1971[57]
Sorbent type	Dolomite (material and energy balances and plant costs almost identical for the case of a limestone sorbent)
Process sulfur load	0.026
Sorbent disposal	Before regeneration
Plant capacity factor	70%
Sulfur recovery	Elemental sulfur by the RESOX Process, with tail-gas cleanup by Beavon
Number of regenerator modules	4
Operating pressure and temperature of AFBB	101 kPa and 870°C
In-situ partial combustion of coal in the regenerator	
Design Assumptions:	
Regenerator temperature	1100°C
Dolomite makeup rate (including attrition losses)	1 mole Ca/1 mole S[1,5]
Dolomite utilization in boiler	35%[1,5]
Dolomite utilization after regenerator	10%[1,5]
Percent SO_2 in the regenerator effluent	12%
No CaS is formed	

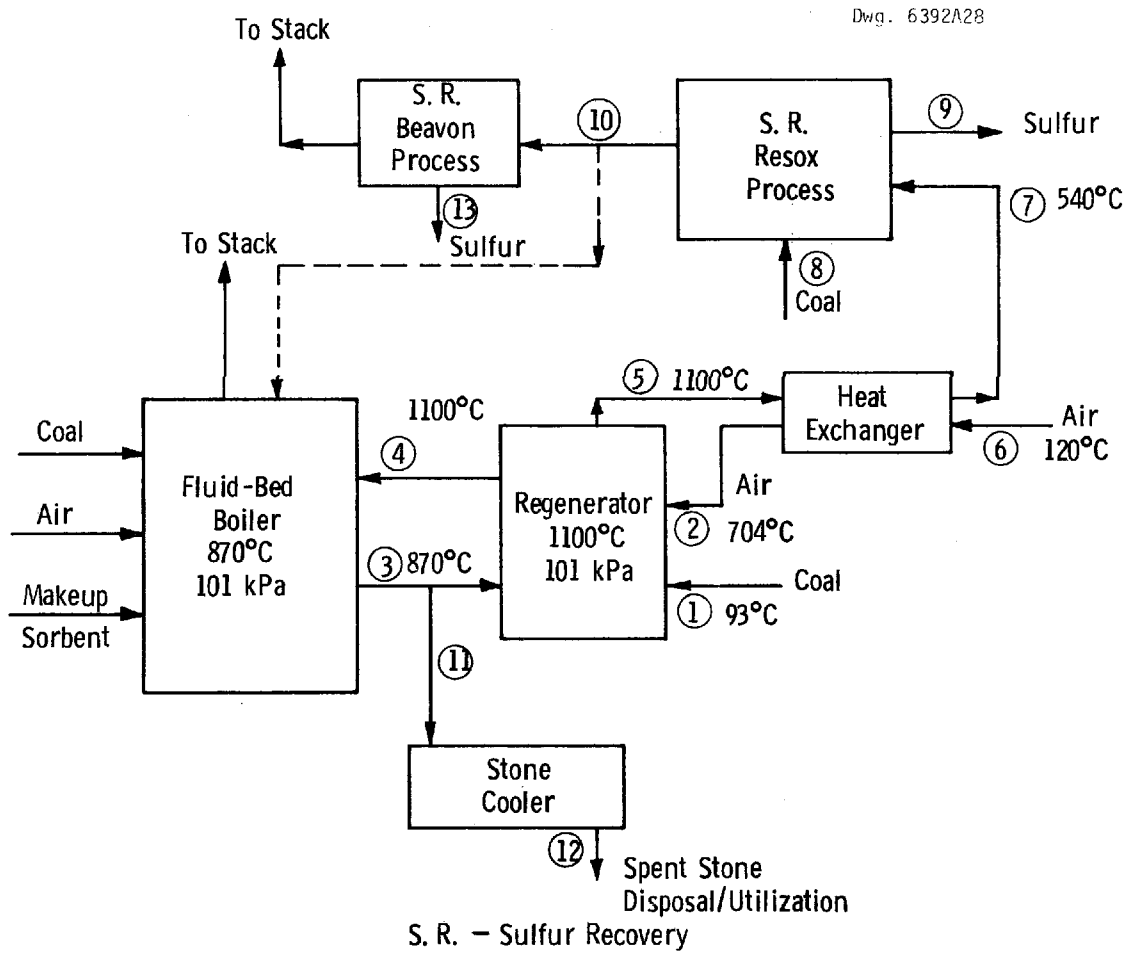

Figure 18. Atmospheric One-Step Regenerative Process Flow Diagram

The process is divided into three elements: the regeneration element, the sorbent circulation element, and the sulfur recovery element. Heat and material balances are given in Table 10.

EQUIPMENT DESCRIPTION

Regeneration Element

The regeneration element consists of four vessels constructed of a carbon steel shell, refractory lined and insulated with a refractory grid. Four blowers supply air to the vessels. The air is preheated in four heat exchangers by the regenerator off-gas. The regenerator off-gas passes through four primary cyclones and then through four secondary cyclones before going to the RESOX process. All of the cyclones are refractory lined and insulated.

Sorbent Circulation Element

The sorbent circulation element consists of four modules like the regeneration element. Each module has a hold vessel that receives sulfated sorbent from six different lines from the six fluidized beds of the AFBB. The sulfated sorbent is then pneumatically transported to the regenerator vessel via a single line. The regenerated sorbent passes to a distribution vessel and then to the boiler through six different lines to the six fluidized beds of the boiler. Four blowers supply air for transporting the sulfated and regenerated sorbent streams. All of the piping and the hold vessels are refractory lined.

Sulfur Recovery Element

The regenerator off-gas passes through a heat exchanger to the sulfur recovery plant. The RESOX process consists of a reducing vessel where SO_2 is reduced to elemental sulfur by coal and a condenser where the sulfur is condensed. Since the sulfur recovery efficiency is around 80 percent, the RESOX tail-gas can either be recycled to the boiler or treated in a secondary sulfur recovery step such as a Beavon process. The latter was chosen for the base design. The Beavon process consists

TABLE 10. HEAT AND MATERIAL BALANCES

Stream No. (Figure 18)	Process Stream	Temp (°C)/Pressure (kPa)	Flowrate (kg moles/hr)	Enthalpy (kJ/kg mole)	Comments
1	Coal to regenerator	93.3/137.8	5602 kg/hr	86.5 kJ/kg	
2	Air to regenerator	704.4/158.5	1207	21,074	
3	Utilized sorbent	871/103.4	773 $\frac{\text{kg moles of Ca}}{\text{hr}}$	110,884	MgO - 50%, CaSO4 - 17.5% CaO - 32.5%
4	Regenerated sorbent	1093.3/103.4	773 $\frac{\text{kg moles of Ca}}{\text{hr}}$	119,379	MgO - 50%, $CaSO_4$ - 5% CaO - 45%
5	Regenerator off-gas	1093.3/137.8	1558	39,890	CO_2 - 18.6%, H_2O - 7.8% SO_2 - 12.4%, N_2 - 61.2%
6	Air to heat exchanger	121/165.4	1207	2,888	
7	Regenerated off-gas to SRP	537.8/130.9	1558	18,319	
8	Coal to SRP	93.3/137.8	3549 kg/hr	86.5 kJ/kg	
9	Sulfur (80% recovery)	121/103.4	155		
10	Tail-gas from SRP	148.9/110.2	1636		
11	Waste stone to cooler	871/103.4	322 $\frac{\text{kg moles of Ca}}{\text{hr}}$	110,884	
12	Waste stone for disposal	93.3/103.4	322 $\frac{\text{kg moles of Ca}}{\text{hr}}$		
13	Sulfur (∿100% recovery)	148.9/110.2	38.7		

of a catalytic reactor where all of the sulfur in the tail-gas is converted to H_2S either by hydrogenation or hydrolysis and an absorber where H_2S is absorbed in sodium metavanadate and eventually converted to sulfur.

DESIGN PARAMETERS

Experimental data obtained on batch regeneration units indicate that a gas residence time of 1 to 2 s is required to approach the pseudo-gas equilibrium. The solids residence time is then estimated by

$$T_s/T_g = \frac{V_g}{V_s} \cdot \frac{(1-\varepsilon)}{e} \cdot \frac{(X_s^B - X_s^R)}{y} \quad .$$

Using typical values of 0.25 for $(X_s^B - X_s^R)$, 0.1 for y, 0.6 for ε, and 1800 for V_g/V_s, the solids residence will be about 3000 times the gas residence time. Foster Wheeler[8] estimated the required actual gas residence time to be about 0.4 s. Based on this value, the solids residence time can be expected to be about 19 min. Argonne's[5] experimental results on regeneration of sulfated Tymochtee dolomite indicate that an increase in the solids residence time decreases the SO_2 concentration but increases the extent of regeneration. At a temperature of 1100°C and a solids residence time of 5 min., an SO_2 concentration of about 10 percent is predicted. According to their predictions,[5] decreasing the solid residence time to 2.5 min. increases the SO_2 concentration to about 11.5 percent but decreases the regeneration from 60 to about 30 percent. Solids residence time has to be carefully chosen to maximize the SO_2 concentration at acceptable regeneration levels. The extent of sorbent utilization in the combustor also has to be taken into account. Argonne reported that a solids residence time of about 12 min. is needed for complete regeneration at a temperature of 1100°C and a nominal gas residence time of about 0.5 s. The nominal and actual gas residence times may be defined as h_s/U and $h_e\varepsilon/U$, respectively.

The fluidizing velocity may be expected to be in excess of 1.2 m/s because of the fairly large size of particles used (∿500 to 1000 μm). The maximum value for the fluidizing velocity may have to be limited to about 2.4 m/s because of excessive particle elutriation at higher velocities.[8] Assuming a gas residence time of 0.5 s, the static bed depth would vary from 0.6 to 1.2 m. Deeper beds result in increased pressure losses and are, therefore, undesirable for atmospheric-pressure operation.

Regeneration Temperature and Pressure

The reduction of the sulfated sorbent to oxide is favored by increased temperature. The maximum temperature is limited by the ash-softening temperature. A temperature of 1100°C is generally considered as a safe temperature in the reducing atmosphere from the point of view of agglomeration in the bed. It was stated that for certain coals, an air-operating temperature of 1315°C may be possible.[8] Since the combustor operates at a temperature of 870°C, the effect of thermal shock due to repeated cycling on the attrition and reactivity of sorbent has to be considered. Wheelock[10] found a sharp reduction in the reaction rate for the reduction of gypsum around 1260°C, where the material attained a glassy appearance, indicating sintering. This suggests that the regeneration temperature should be less than 1260°C.

The equilibrium concentration of SO_2 is inversely proportional to the pressure. Thus, it is advantageous to carry out the regeneration at low pressures. At atmospheric pressure and a temperature of 1100°C, the equilibrium concentration of SO_2 appears to be about 24 percent. Heat and material balances, however, would limit the concentration of SO_2 to about 10 to 12 percent when coal and air are the input streams to the regenerator. At a pressure of 1000 kPa and 1100°C, the equilibrium concentration of SO_2 appears to be about 2.5 percent. Heat and material balances would not be a limiting factor at high pressures.

Feed Location and Reducing-Gas Composition

In the regeneration of $CaSO_4$, CaS is also formed from a side reaction. In order to minimize the amount of CaS in the bed, Exxon[7] created an oxidizing zone near the top portion of the bed by auxiliary air injection above the fluidizing grid in their batch studies at ∿1000 kPa with propane as the fuel. They obtained about 40 percent CaS without auxiliary air injection but obtained no significant CaS with auxiliary air injection, possibly because of conversion of sulfide to either sulfate or oxide. In Argonne's experiments[5] on regeneration at atmospheric pressure using coal, an oxidizing zone is established at the bottom of the fluidized bed and a reducing zone near the top by injecting coal well above the grid. They obtained about 5 and 1.1 wt % CaS when the ratios of the nominal heights of the reducing zone to the oxidizing zone were approximately 5 and 1.3, respectively. In the latter case much better sorbent regeneration was obtained (71 percent, compared to 41 percent). The substantial difference between Exxon's and Argonne's results may be due to the difference in fuel used (which affects the distribution of the reducing gas throughout the bed) and the difference in the pressure (which changes the equilibrium concentration of SO_2, which, in turn, is likely to affect the concentration of CaS in the bed). These two studies illustrate the importance of controlling the oxidizing and reducing zones.

In addition to minimizing the formation of CaS and increasing the regeneration, the two-zone reactor provides a higher concentration of SO_2 and is less sensitive to operating conditions. An oxidizing zone at the top of the bed may provide more complete consumption of the coal and lower the H_2 and CO content of the outlet gas.

The experimental data on regeneration of $CaSO_4$ supported on inert material, obtained in TG apparatus, was analyzed by Argonne,[5] and the following equations were presented:

$$d[CaSO_4]/dt = -A\ [R.G.]^{0.8}\ [CaSO_4]\ \exp\ (-14{,}900/RT) \quad ,$$

where $[CaSO_4]$ and [R.G.] represent the molar concentrations, t is the regeneration time in seconds, T is the temperature in K, and R.G. is the reducing gas. The value of A was reported as 3.36 for H_2 or CH_4 and 1.08 for CO. The regeneration rate, therefore, is three times lower for CO than for H_2 or CH_4.

Process Options

The various process options that are important to the one-step regeneration process are:

- o Fuel for reducing gas : Coal/CH_4/fuel oil
- o Sorbent : Limestone/dolomite
- o Recovery of sulfur : Elemental sulfur/sulfuric acid
- o Location of regenerator : Integral with FBC/external
- o Sorbent size : Single- vs double-screened feed
- o Disposal of spent sorbent : Before or after regeneration

The fuel required to supply the heat and the reductants to carry out the regeneration of sulfated sorbent can be either coal or methane. The gasification of coal or partial oxidation of methane can be performed either integrally with regeneration or separately. Heat and material balance calculations show that SO_2 concentrations of up to 1.5 percent higher can be obtained in the case of coal than in the case of methane. Natural gas, being in short supply, would not be a preferred option. Argonne[5] obtained better regeneration results with coal than with methane in their studies with partial in-situ combustion of the fuel. The concentration of the reducing gas in the regenerator is likely to be more uniform for coal than for methane. The separate partial combustion of the fuel to produce the reducing gas is not a preferred option because it is less efficient, owing to higher heat losses and costs, but it may have to be considered if the integral operation is not feasible.

Both dolomite and limestone are equally effective sorbents for the AFBB operation. The difference in regenerability between these two has yet to be shown. In the case of limestone, a slight reduction in the

cost of the sorbent circulation element can be expected because of its lower molecular weight. The selection of a particular stone would depend upon the availability, cost, attrition resistance, and the reactivity of the stone for sulfation and regeneration with repeated cycling.

The recovery of sulfur can be carried out either by the production of elemental sulfur or sulfuric acid. Production of elemental sulfur is a preferred option due to its ease in handling, storage, and transport; and it can be performed either by the Allied Chemical process or by the RESOX process. If the concentration of SO_2 in the regenerator off-gas is too low (<4 to 5 percent), a preliminary step for concentrating SO_2, such as a Wellman-Lord process, is needed before either of the above processes can be applied.

The RESOX process appears to be better suited to the regenerative process than are other sulfur recovery processes. Its advantages are the following:

- Coal is used as the reducing agent.
- No particulate removal from the sulfur-bearing gases is needed.
- Conversion of a part of SO_2 to H_2S needed in other processes is not required.

The disadvantages are:

- The process is uncertain since it is not yet commercially developed.
- Sulfur recovery efficiency (about 80 percent) is lower.
- A particular type of coal may possibly be required, thus necessitating a separate coal-handling system.
- A secondary sulfur recovery process is needed.
- The sulfur produced may not be of commercial grade.

Regenerator Vessel Location

Several possibilities for the location of the regeneration vessel in relation to the combustor have been conceived in the past. Pope, Evans

and Robbins[59] experimented with the regenerator attached to the boiler, with an orifice cut between them for transferring solids. It was not successful because, due to agglomeration near the orifice, the flow of solids between the vessels could not be controlled. They also tried regeneration in the carbon burn-up cell without much success. The SO_2 concentration was too low because of the need for maintaining high fluidizing velocity.

In the present study a single regeneration vessel was chosen for all of the six beds where the transfer of solids is by means of dilute-phase transport using hold vessels. The boiler and regeneration vessels can not be located close to one another. Another possibility is to locate a regeneration vessel close to each bed of the combustor and carry out the solids transfer by means of dense-phase transport via two inclined legs connecting the two vessels with pulses of gas controlling the flow of solids. This arrangement does not appear to be suitable for the present study since control and turndown would be complex and the economics would be unfavorable.

Sorbent Size

The selection of a narrow or wide particle size distribution for the sorbents would depend on the rate of sulfation in the boiler and the rate of reduction of the sulfated sorbent as a function of the particle size, as well as such factors as attrition and elutriation of particles in the boiler and the regenerator. The results reported to date on the sulfation and regeneration of limestones and dolomites indicate that the particle size is not a critical factor within the size range (∿500 to 1000 μm) normally used in fluidized-bed combustion.[60] Since the residence time of the coarse particles is greater than that of elutriate fines, the reduced activity of the coarse particles is compensated for by the longer residence time. If the fines are recycled, they can be expected to increase the utilization of the sorbent. Argonne[61] found no significant difference in sulfur removal with limestone particles of 50 to 600 μm diameter.

The amount of coal ash in the bed should be minimal in order to keep the bed chemically active. Coal with a size distribution different from that of the sorbent could help in removing the ash. The sorbent size distribution may be an important factor in controlling the ash content of the bed. Exxon[9] observed that more slag ash was retained in the regenerator with smaller sorbent sizes. In interpreting the experimental results on sorbent deactivation as a function of the particle size, this factor must be considered.

In view of the above considerations, a single-screened feed is preferred to a double-screened feed that would increase the operating cost considerably. Fines should be screened since they will increase the rate of elutriation from the regenerator and could cause agglomeration.

The elutriation of sorbent fines present in the feed and those resulting from attrition of the sorbent is an important consideration in the particulate control of the regenerator off-gas and also in estimating the Ca/S makeup ratio. It can be expected that the sorbent elutriation is additive to the elutriation of ash and carbon fines. The elutriation rates of the sorbent are very difficult to determine in the case of cyclic absorption-regeneration and are dependent on the operating conditions of the combustor and the regenerator. ANL reported a sorbent loss of 6 percent per cycle because of attrition followed by elutriation from the reactors in a ten-cycle experiment.[5] Exxon found in their miniplant studies that the sorbent losses through attrition and entrainment were very low during an integrated operation of the combustor and the regenerator.[7] This result shows that regeneration may increase the attrition resistance of the sorbent. Additional work is needed to estimate the particle carry-over from the regenerator.

Coal ash present in the regenerator may react with the fine sorbent particles, placing an added burden on the particulate removal equipment. This reaction may lower the slagging tendencies of the ash and prevent deposition of corrosive solids on cyclone surfaces. An agglomerating

tendency among the sorbent fines can be expected above the ash fusion point because the molten ash may wet the sorbent particles, causing them to become sticky. Coals with low ash-fusion points may not be suitable as fuels for the regenerator. ANL reported that the ash-fusion temperature of Arkwright and Sewickley coals under reducing conditions is close to 1100°C, which is a desirable temperature level for regeneration.[5]

Spent Sorbent Removal

Part of either the sulfated or the regenerated sorbent must be discarded, since their activity is reduced by repeated cycling, requiring a certain makeup sorbent rate. It is better to discard the sulfated sorbent than the regenerated sorbent, from the point of view both of the reduced load on the regenerator and of the greater environmental acceptability of the sulfated stone. In the present study it is assumed that the spent stone is not processed but passes through a cooler/conveyor to reduce its temperature before disposal.

PERFORMANCE PROJECTIONS

The single most important variable of the process is the concentration of SO_2 in the regenerator effluents, which depends on the type of fuel used in the regenerator, temperature, pressure, heat losses, and the change in the utilization of calcium across the regenerator. The concentration of SO_2 in the regenerator effluent was estimated to be about 12 percent. The effect of various factors on the maximum concentration of SO_2 that can be achieved has been studied from material and energy balance considerations, as reported in Appendix A.

Ca/S Makeup Ratio

The required calcium/sulfur molar feed ratio depends on the activity of the sorbent in the boiler and the regenerator and the rate of circulation of solids between the two processing steps. Through analysis of TG data,[62] from atmospheric-pressure operation of once-through systems, Ca/S makeup ratios of 2.8/1 and 2.2/1 have been projected for calcined

limestone and dolomite, respectively, for a temperature of 816°C. At temperatures above 843°C, however, sulfur removal efficiency was drastically reduced. At a temperature of 954°C, Ca/S makeup ratios of 5/1 and about 4/1 were projected for calcined limestone and dolomite, respectively. The projections on Ca/S makeup ratio for regenerative systems have been very few. Pope, Evans and Robbins[59] estimated a ratio of 1/1, and from recent bench-scale experimental data Argonne[63] projected a ratio of about 0.35. This latter value is based on limited small-scale data on inadequate analyses. Additional data are needed for a reliable estimate of this ratio.

Argonne presented an analysis to estimate the Ca/S makeup ratio based on (a) experimental data on total CaO/S mole ratio required at 75 percent sulfur retention as a function of the sulfation cycle, and (b) an analytical expression for the age (number of cycles) distribution of the sorbent in the boiler at steady-state as a function of the makeup rate. Sorbent utilization for nth sulfation cycle was represented by 0.92 exp (-0.139n), where n is the number of the sulfation cycle. A similar analysis was performed by Exxon.[9]

Thermal Efficiency

The combustion efficiency in AFBB systems can be expected to be about 90 percent without a carbon burn-up cell, the inefficiency resulting mainly from the carry-over of carbon fines.[11] In an atmospheric regenerator higher carbon losses can be expected because of (a) the reducing atmosphere, (b) the absence of any internals, and (c) the reaction of carbon with CO_2, resulting in the formation of CO near the top portion of the beds and its subsequent loss through the regenerator off-gas. The compensating factors in favor of regeneration are the highest operating temperature and lower fluidization velocity (∿1.2 to 2.4 m/s as opposed to ∿1.8 to 3.6 m/s in the combustor). Thus, it is desirable to operate the fluidized bed of the regenerator at a low fluidization velocity from the point of view of reducing the carbon loss. The heat losses of the regenerator have been estimated to be in the range of 0.5

to 1 percent. The energy requirement of the regenerator for a 635 MW plant has been estimated to be ∿3 percent of the energy requirement of the boiler (Appendix A). Assuming the carbon loss in the regenerator is about 15 percent, this represents about 1/2 percent of the fuel input to the boiler, which may not be a serious loss. The effect of CO and carbon fines present in the regenerator off-gas on the sulfur recovery system should be considered.

Environmental Impact

The environmental impact of the regeneration process depends on the particulate emission rate, trace element release, CO emission, combustion efficiency, NO_x emission, SO_2 emission from the sulfur recovery plant, the rate at which spent sorbent is produced, and the method of spent sorbent processing. Since the fuel requirement of the regeneration process is about 3 percent of the fuel required by the boiler, the increase in the emission of particulates and other pollutants can be expected to be small with, hence, no significant impact on the power plant emissions. There is evidence that the regeneration process increases the attrition resistance of the sorbent and, thus, reduces the loss of sorbent fines. The emission of trace elements will in all likelihood be lowered because of the reduced sorbent requirement of the process. The data available on the release of trace elements by the sorbent in the boiler are limited.

The emission of sulfur compounds from the regeneration process depends on the sulfur recovery process. For the basic design presented here, the emission of SO_2, COS, and other sulfur compounds can be expected to be less than 100 ppm, of which less than 1 ppm is present as H_2S.[14] If the Allied Chemical process is chosen, the incineration of the tail-gas from the sulfur recovery plant (SRP) must be accomplished to reduce the H_2S emissions.

Reliability

The reliability of the regeneration system will be affected by factors such as the need for a special type of coal; the problem of hot

spots; and agglomeration of the sorbent due to fusion of coal ash, deactivation of the sorbent, attrition, and decrepitation of the sorbent; particle carry-over; and so on. The operating conditions of the regenerator may have to be modified if a particular type of coal is desired for regeneration. The problem of hot spots may not be as severe in an atmospheric regenerator as in a pressurized regenerator. There is no adequate information on the attrition and the deactivation of various sorbents. The ability to minimize the formation of CaS by adequate control of the lengths of oxidizing and reducing zones is an important factor.

The circulation of solids between the combustor and the regenerator at high temperature is another problem area that will affect the reliability of regeneration. With the modular design solid feeding is simpler, because of the possibility of side feeding, but the distribution of solids is complex. Piping and controls are complex, but start-up is easier, since one module can be started at a time. The modular design has better turndown capabilities.

It is expected that the AFBB will be operated at turndown ratios of up to 4:1. With the system design based on four regeneration modules, each unit may be shut down completely, depending on the turndown requirement, while other units continue to operate at full capacity. Thus, the performance of the regeneration system can be maintained at any turndown ratio, increasing the plant reliability.

COST ESTIMATE

The equipment of one of the four modules considered in an economic evaluation of the process is shown in Figure 19. Estimates for the investment cost were prepared on the basis of the equipment costs given in a 1975 Westinghouse Report on oil gasification[48] and the information obtained from manufacturers. The process investment cost and the energy cost as a function of the process sulfur load are shown in Figures 20 and 21, respectively. Figure 22 shows a comparison of the process

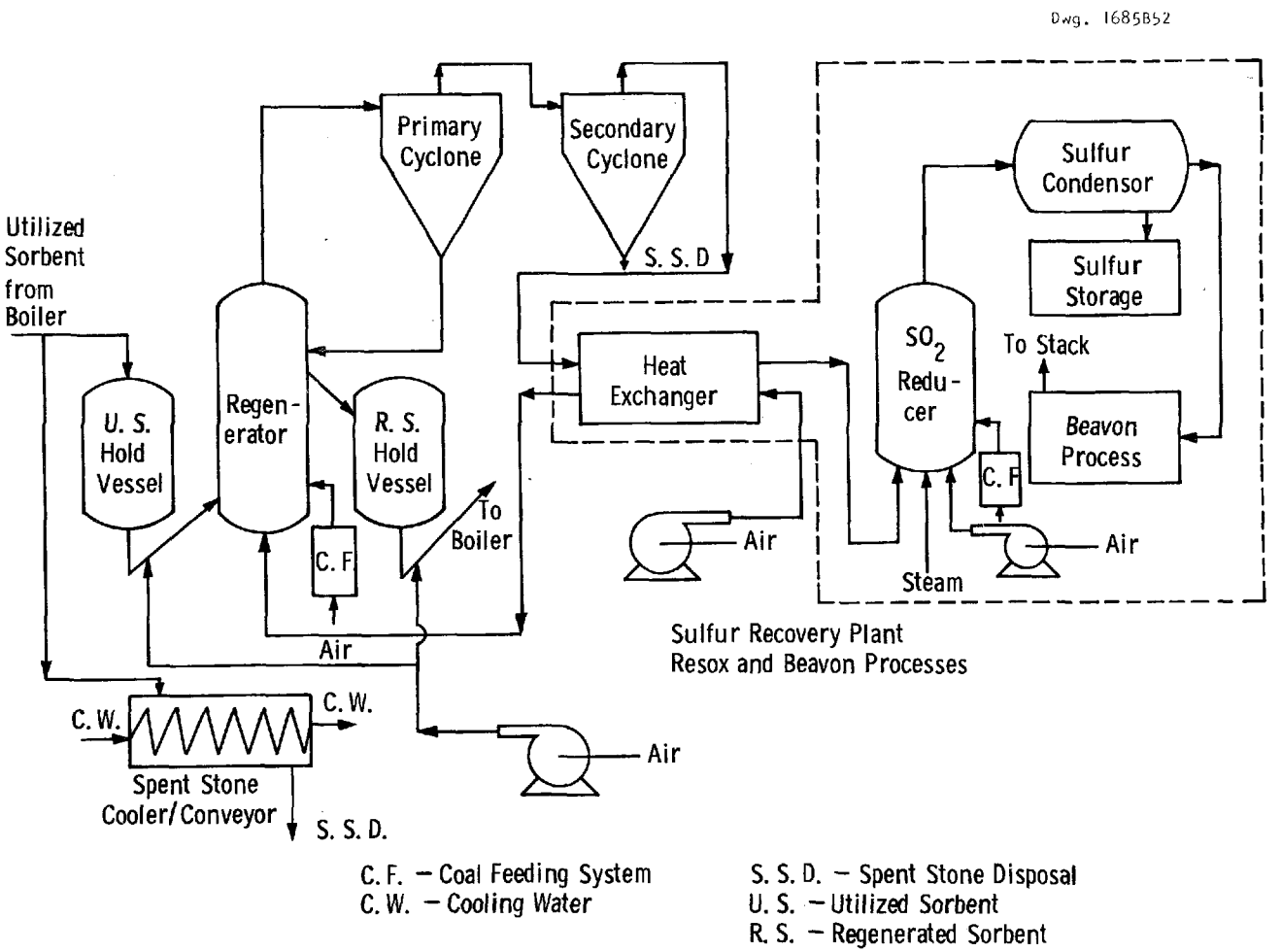

Figure 19. Atmospheric One-Step Regeneration Schematic Flow Diagram of One Module

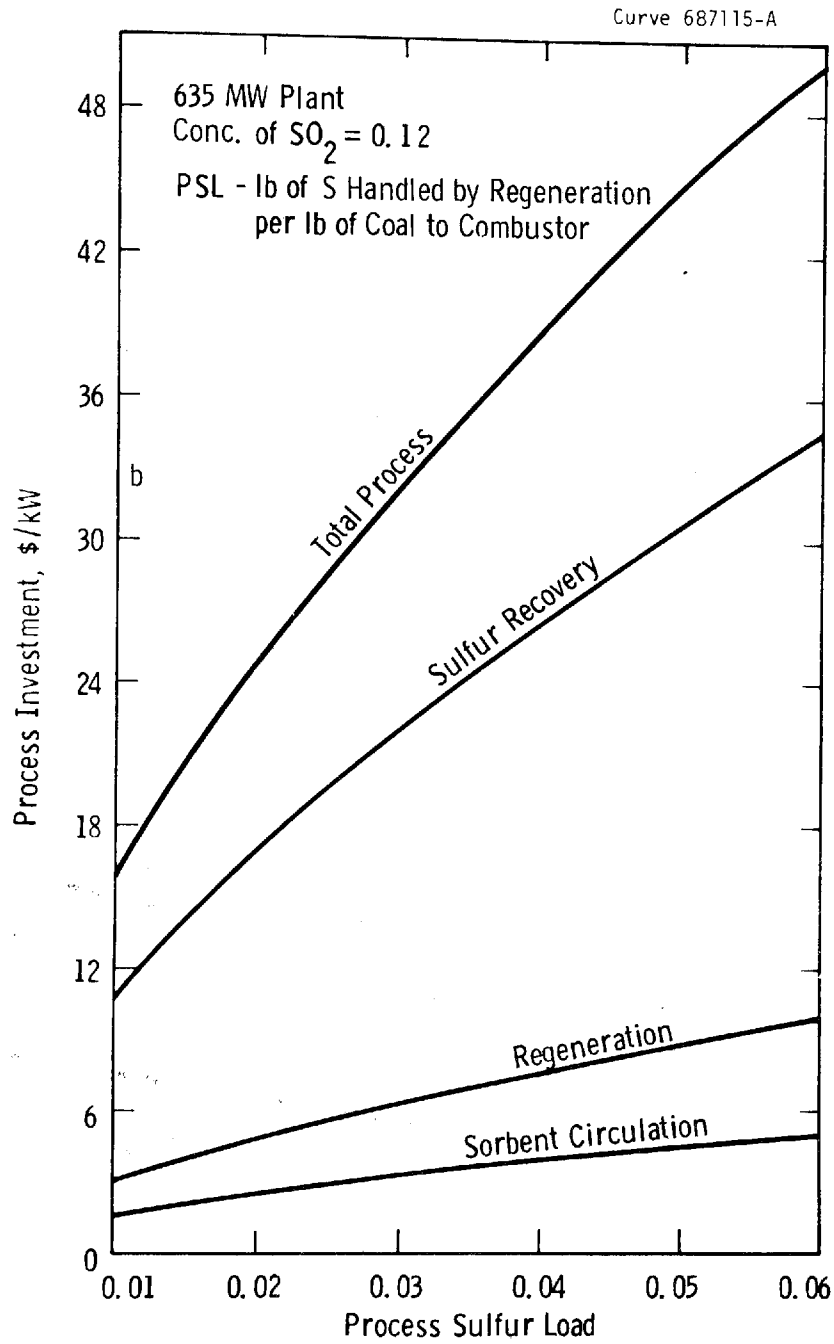

Figure 20. Capital Cost of Regenerative Process as a Function of PSL

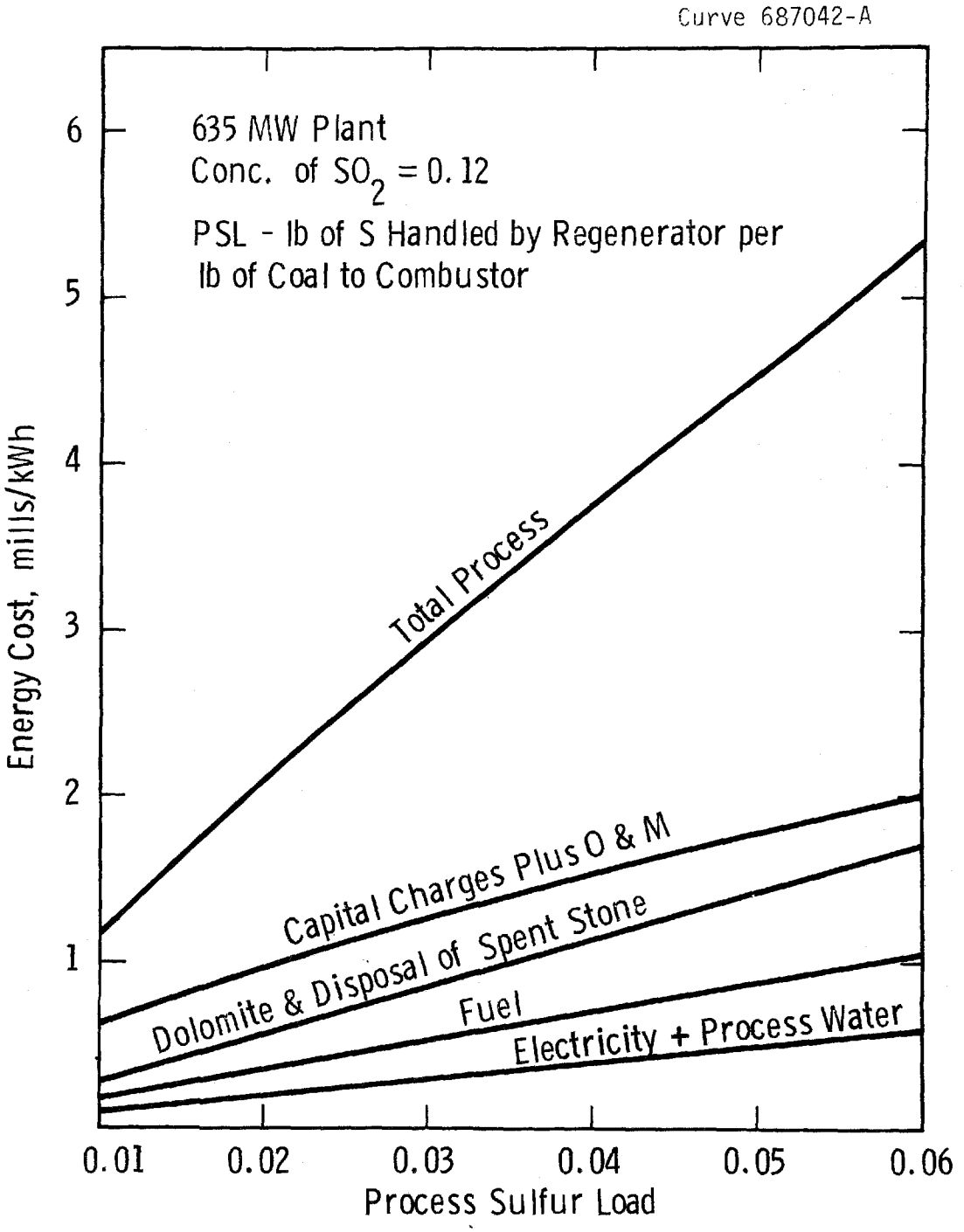

Figure 21. Energy Cost of Regenerative Process as a Function of PSL

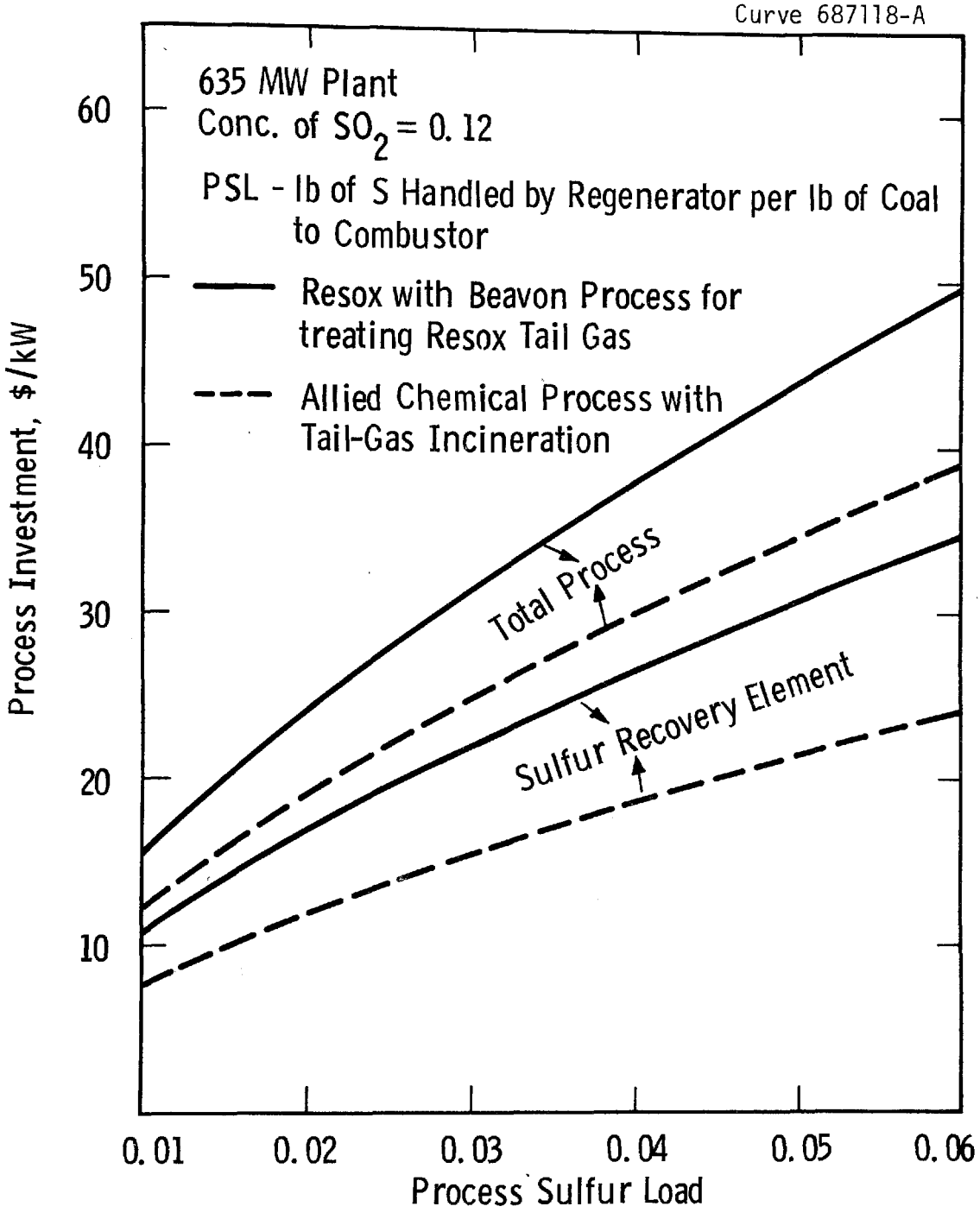

Figure 22. Comparison between Cost of RESOX and Allied Chemical Processes as a Function of PSL

investment and the energy costs of two options of the sulfur recovery system--namely: the RESOX process, with the Beavon process for treating the RESOX tail-gas, and the Allied Chemical process with incineratin of the tail-gas.

The sulfur recovery element is by far the most expensive system. For a process sulfur load of 0.025, its cost accounts for more than 60 percent of the total investment cost. The sorbent circulation element is the least expensive of the three elements. The effect of PSL on the cost of the sulfur recovery element is substantially higher than on the cost of the regeneration element or the sorbent circulation element. Hence, it is desirable to have as low a load as possible on the sulfur recovery element. From the effect of m and X_S^B on PSL, one can see that for low values of m($\sim$0.3), the effect of X_S^B on PSL is relatively small, but at high values of m($\sim$1.0) the effect is very significant. It is obvious that if the sorbent is to be disposed of before regeneration, it is desirable to have a high value of X_S^B; if the sorbent is to be disposed of after regeneration, it is desirable to have a high value of X_S^R.

The capital cost/capacity exponent for the regenerative process can be taken as 0.65. the capital cost given here includes the indirect costs, contingency, and fee, but not the interest during construction.

The energy cost is computed on the following cost assumptions:

- Cost corresponds to the end of 1976.
- Capital charges plus operation and maintenance are 20 percent of the total cost.
- Contingency is 20 percent and contractor fees are 3 percent of the base cost.
- No interest during the construction period is included.
- Coal is \$20 per Mg and dolomite is \$5 per Mg.
- Waste stone disposal cost is \$3 per Mg.
- Electricity is 23 mills/kWh.
- Process water is \$0.10 for 3.8 m^3.

- There is no credit for recovered sulfur.
- The capacity factor is 70 percent (6132 hours of operation in a year).

If credit for sulfur is given at $25/Mg for a process sulfur load of 0.03, the total energy cost will be reduced by 0.28 mills/kWh.

The energy cost of the once-through and regenerative options for three regeneration Ca/S makeup ratios is given in Table 11. For dolomite

TABLE 11. ENERGY COST

(mills/kWh)

	Once-through	Regeneration Ca/S Ratio		
		0.2	0.6	1.0
Capital Charge, plus O&M	3.79	4.72	4.74	4.76
Coal	8.35	8.80	8.80	8.80
Dolomite	1.54	0.14	0.42	0.70
Total	13.68	13.66	13.96	14.26

Assumptions:

- The Ca/S ratio is 2.2 for the once-through option, while meeting current NSPS.
- The cost of boiler equipment only based on a 1971 Westinghouse Report is included.[57]
- An escalation index of 1.6 is used to update the cost figures to correspond to the end of 1976. This results in a boiler plant equipment (includes all solid handling systems) cost of $90.5/kW.
- The percent of sulfur in coal is about 4. This corresponds to a PSL of 0.025 in the case of regeneration.
- Other assumptions are the same as previously.

purchased at $5/Mg, a Ca/S ratio of 0.2 is required by the regeneration process in order to break even with the once-through process. Higher sorbent costs will reduce the break-even Ca/S ratio.

Recycling of RESOX Tail-Gas to Boiler

The RESOX tail-gas can be recycled to the boiler instead of being treated in a secondary sulfur recovery process such as the Beavon process. The investment for cost recycling as a function of SO_2 concentration in the regenerator off-gas is as follows:

% SO_2	4	8	12
Investment cost, $/kW	3.06	1.91	1.45

The above costs are estimated on the assumption that the operation of the boiler is not affected by the recycling of the RESOX tail-gas. They compare favorably with those of the Beavon process, which has an investment cost of about $4/kW for a 12 percent SO_2 concentration.

A cost sensitivity analysis of the process is shown in Table 12. The important design options to be considered are: a separate coal gasifier versus an integrated operation to produce the reducing gas; a change in the number of regenerator modules; and the production of elemental sulfur versus sulfuric acid and the process to be adopted.

The energy cost of the once-through and regenerative options is compared for three different sorbent costs in Table 13.

The energy cost of the regeneration option for production of both elemental sulfur and sulfuric acid is given in Table 14.

The energy cost of the once-through and regenerative options is compared for three different coal costs in Table 15.

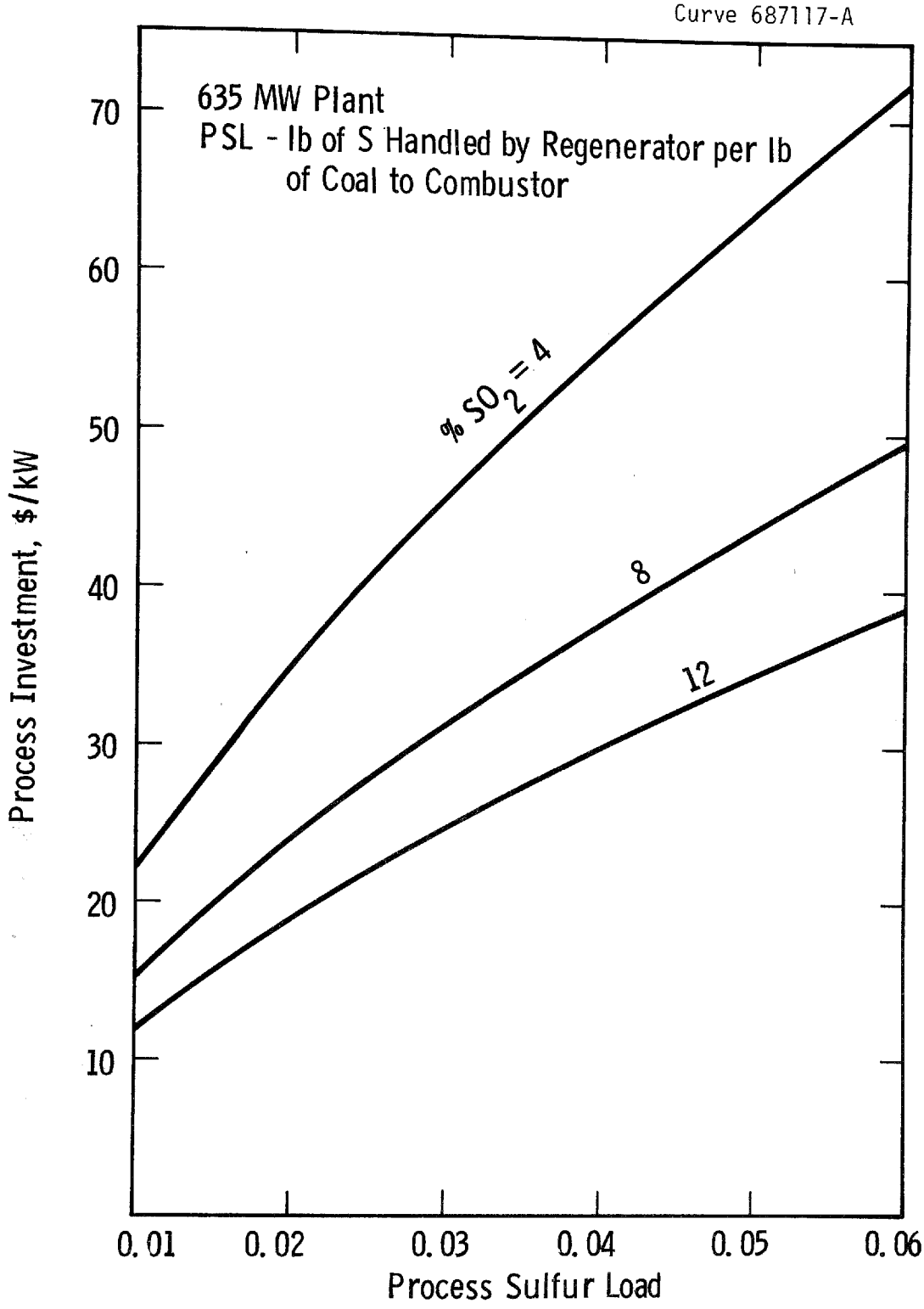

Figure 23. Process Investment as a Function of PSL for Different Concentrations of SO_2 With Allied Chemical Process for Sulfur Recovery

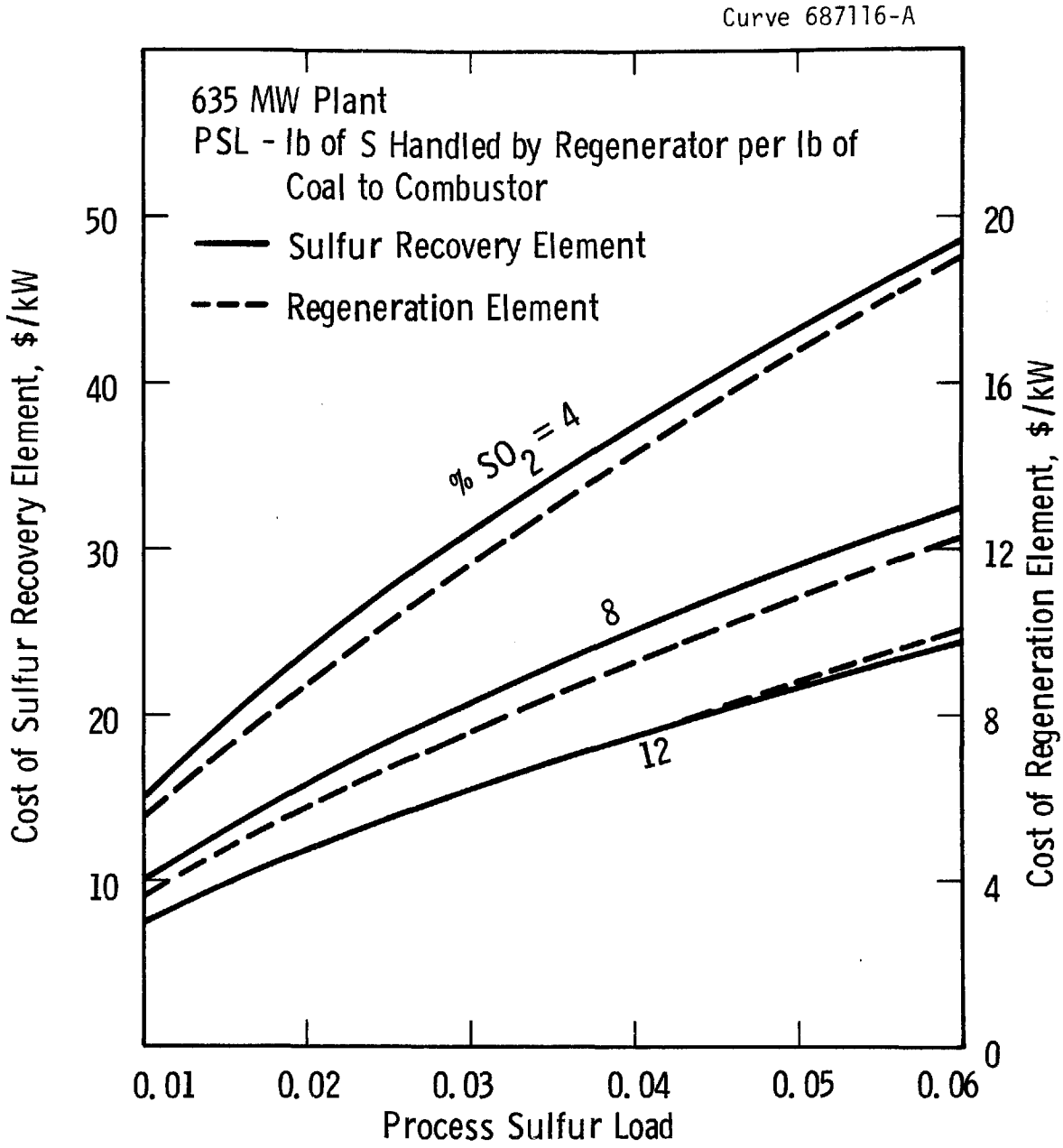

Figure 24. Cost of Sulfur Recovery and Regeneration Elements for Different % SO_2 with Allied Chemical Process as a Function of PSL

TABLE 12. COST SENSITIVITY OF THE ATMOSPHERIC REGENERATIVE PROCESS

Variables	Regeneration Element	Sorbent Circulation	Sulfur Recovery	Total Regenerative Process	Additional Factors to Be Considered
Sorbent-Type Limestone vs Dolomite		Reduction of $0.70/kW for limestone		Reduction of $0.70/kW for limestone	Difference in regenerability has yet to be shown
Decrease in Regenerator Modules from 4 to 1	Reduction in cost of about $2.50/kW	Reduction in cost of $1.25/kW	Appreciable reduction, not estimated.	$3.75/kW reduction plus that due to sulfur recovery	Feasibility, effect on turndown ratio, shop vs field fabrication
Separate Coal Gasifier	Increase in cost of about $2.70/kW			Becomes necessary when the integrated operation is not feasible	Performance
Sulfur Recovery Process			No significant difference between the Resox and Allied processes	RESOX appears to be potentially advantageous	Needs further R&D effort
Sulfur vs Sulfuric Acid			Drastic reduction in the cost	Large impact on the process	Marketability, should be studied in detail
Decrease in Sorbent Utilization	May not be significant	Significant increase in cost. A minimum of 0.2 is recommended.	Cost increases due to lower levels of SO_2	Appreciable effect at lower levels of utilization	Change in reactivity and attrition characteristics
Decrease in Regenerator Temperature	Negligible	Cost increases due to lower levels of utilization	Cost increases due to lower levels of SO_2	Appreciable effect	Process may not be feasible below a certain level
Recycling of RESOX Tail-Gas to Boiler			Reduction of $2.50/kW	Reduction of $2.50/kW	Effect on boiler operation

TABLE 13. ENERGY COST

(mills/kWh as a function of the cost of fresh sorbent plus cost of disposal of spent stone per Mg)
(Ca/S = 1 for regeneration, Ca/S = 2.2 for once-through)

	$4.00		$8.00		$12.00	
	Once-through	Regeneration	Once-through	Regeneration	Once-through	Regeneration
Capital Charge + O&M	3.79	4.76	3.79	4.76	3.79	4.76
Coal	8.35	8.80	8.35	8.80	8.35	8.80
Dolomite	0.77	0.35	1.54	0.70	2.31	1.05
Total	12.91	13.91	13.68	14.26	14.45	14.61

TABLE 14. ENERGY COST

(units/kWh, showing effect of regenerative systems by a product)

		Regeneration	
	Once-through	Production of Sulfur	Production of Sulfuric Acid
Capital Charges + O&M	3.79	4.76	4.33
Coal	8.35	8.80	8.80
Dolomite	1.54	0.70	0.70
Total	13.68	14.26	13.83

TABLE 15. ENERGY COST

(mills/kWh as a function of the cost of coal per Mg)

	$15.00		$20.00		$25.00	
	Once-through	Regeneration	Once-through	Regeneration	Once-through	Regeneration
Capital Charges + O&M	3.79	4.76	3.79	4.76	3.79	4.76
Coal	6.26	6.60	8.35	8.80	10.44	11.0
Dolomite	1.54	0.70	1.54	0.70	1.54	0.70
Total	11.59	12.06	13.68	14.26	15.77	16.46

From an examination of Tables 11, 13, and 14, the regenerative option appears economically less attractive than does the once-through option, in general. A comparison of energy costs of both options for different Ca/S ratios shows that at a low makeup rate of 0.2, regeneration becomes competitive. Options such as recycling the RESOX tail-gas or producing sulfuric acid rather than sulfur are likely to reduce the cost of regeneration and make it more economical.

For a Ca/S makeup ratio of 1.0, the break-even point between the regeneration and once-through options is likely to be in the range of $12 to 16/Mg of sorbent used. On the basis of a market study on the cost of limestones and dolomites,[64] the cost of fresh sorbent delivered can be expected to be in the range of $4 to 8/Mg in most areas of the nation. The cost of disposal may be expected to be in the range of $2 to 4/Mg of waste stone, at which costs a regeneration Ca/S makup of 0.2 would be necessary to break even. An examination of Tables 13 and 15 shows that the cost of sorbent is very important in comparing the two options, but the cost of coal is insignificant.

For a Ca/S makeup ratio of 1.0, the option of producing sulfuric acid rather than sulfur does not make the regeneration cheaper than once-through, even though the cost of sulfur recovery decreases by more than half.

ASSESSMENT

Conclusions

- The cost of the regenerative process is based on the assumption that a concentration of SO_2 of about 12 percent can be obtained. This has yet to be demonstrated experimentally.
- The sulfur recovery system is the dominant subsystem in the regenerative process and costs more than three times that of the regeneration system. The sorbent circulation system is of minor importance.
- A comparison of the RESOX process and the Allied Chemical process for the sulfur recovery system shows that the latter appears to be cheaper for the particular regenerative process studied here. Since the cost is based on preliminary estimates, this difference may not ultimately be significant.
- A comparison of the once-through option with the regenerative option shows that the process investment cost is about 20 percent higher and the energy cost about 4 percent higher for the latter option. This comparison is based on the assumption that the spent stone does not need further processing before disposal.
- Recycling RESOX tail-gas to the boiler appears to be more attractive than treating it in a secondary sulfur recovery process.
- If sulfur is recovered in the form of sulfuric acid rather than elemental sulfur, the capital cost of the regenerative option can be reduced by about 10 percent.

- The regenerative option might become competitive with the once-through option if the makeup ratio of Ca/S can be reduced to about 0.2 for a sorbent cost of about (fresh stone plus disposal) $8 per Mg.
- For a Ca/S makeup rate of 1.0, regeneration is likely to break even at a sorbent cost (fresh stone plus disposal of $12 to 16/Mg.
- The need for spent stone processing because of possible future environmental constraints is not known. The potential environmental benefits of sorbent regeneration resulting from a reduced quantity of spent sorbent must be weighed against increased coal consumption and auxiliary power, and must consider the environmental nature of the spent sorbent in addition to costs.
- If sulfur vapor rather than sulfur dioxide can be produced in the regenerator, regeneration is likely to become attractive. The scope and the need for process innovations in sulfur recovery are thus evident.
- Research and development should be continued to demonstrate the technical feasibility of the regenerative process and to make improvements in the sulfur recovery process.

Development Requirements

Areas in which work needs to be continued and that are important to the regenerative process can be identified as the following:

- Development of a sulfur recovery process suitable for the atmospheric one-step regeneration process
- Determination of the maximum percent of SO_2 in the regenerator effluent that can be achieved in a continuous operation of the combustor-regenerator system
- Change in the activity and the regeneratility of the sorbent with repeated cycling

- Separation of sorbent and ash in the regenerator
- Investigation of the possibility of hot spots in the regenerator bed that will contribute to fusion of ash and sorbent fines
- Disposal/utilization of the spent sorbent
- Effect of coal fly ash on the deactivation of the sorbents.

Reliability

The reliability of the regeneration process is affected by several factors, such as the type of fuel, the sorbent characteristics, and operating problems, all of which are being investigated. The present development effort is in a preliminary stage and it is, therefore, difficult to make accurate projections on capital and operating costs, technical feasibility and performance, environmental impact, and reliability. The analysis and various projections, based on the limited data available made in the current study, should be viewed as preliminary.

A study on alternative sorbents being conducted at Argonne, Exxon, and Westinghouse might give rise to new regeneration systems. The possibility exists that new and advanced concepts are under consideration at several research organizations. It is hoped that adequate attention will be paid in the future to developing a sulfur recovery process suitable for regeneration. It does not appear sound to try to solve problems of regeneration without first making it an economical process; to do so requires a concerted effort in all areas of regeneration.

SECTION 6

REGENERATION FOR PRESSURIZED FLUIDIZED-BED COMBUSTION

Process evaluations for pressurized fluid-bed combustion sorbent regeneration systems were reported in 1973.[1] An update of that work is presented here, based on current performance expectations and an improved understanding of major component costs. The economics and performance of two reductive decomposition schemes, one operated at about 1000 kPa and one at about 100 to 200 kPa, and a two-step regeneration scheme were estimated. Costs and performance are compared with once-through PFBC and conventional power plants with stack-gas cleaning. The designs are conceptual in nature and were not based on sensitivity analysis or optimization.

PROCESS OPTIONS

Major process options are listed in Table 16. Several of these options have been previously described.[1]

Numerous process options associated with the regeneration process operating conditions (reaction temperatures, fluidization velocities, bed depths, sorbent particle size, etc.), process flow logic (heat exchange between streams, temperature control, energy recovery, etc.) and minor equipment selection also exist.

Evaluation Basis

The power plant basis listed in Table 17 has been applied in the assessment. The process sulfur load, reflecting in part the sulfur content of the coal, is varied from 0.01 to 0.06. Important process characteristics are given in Table 18 as a function of the process sulfur load.

TABLE 16. PROCESS OPTIONS

Regeneration Reaction Scheme: reductive decomposition, two-step process (calcium sulfide formation followed by H_2S generation by steam and CO_2 reaction)

Regeneration Reactant Gas Generation: external generation, in-situ generation or purchase

Fuel for Reactant Generation: methane, fuel oil, coal, etc.

Sources for CO_2 Recovery: stack gas, sulfur recovery tail-gas, pressurized combustor gas, external combustion gas, purchase

Process for External Reductant Generation: gasification, partial oxidation, reforming, etc.

Sulfur Recovery Form: elemental sulfur, sulfuric acid

Sulfur Recovery Process: Allied Chemical process, Foster Wheeler RESOX process, etc. (see Section 4)

Process for CO_2 Recovery: Benfield Hot Potassium Carbonate process, etc. (see Section 4)

Spent Sorbent Processing: none, dry sulfation and carbonation, etc. (see Volume V)

Handling Sulfur Recovery Tail-Gas: recycle to combustor tail-gas cleaning, incineration and exhaust to environment

Regenerator Pressure: 100 to 1500 kPa

Sorbent Type: dolomite or limestone

Layout: number of modules, number of parallel trains, etc.

Type of Sorbent Circulation System: dilute pneumatic transport, dense-phase pneumatic transport, etc. (see Section 4)

TABLE 17. POWER PLANT BASIS

Plant Capacity - 635 MWe (based on once-through sorbent power plant performance)
Plant Heat Rate - 9040 kJ/kWh (based on once-through sorbent performance)
Combustor Excess Air - 17.5%
Combustor Pressure - 1013 kPa
Process Sulfur Load - 0.01 to 0.06
SO_2 Emission - meets current EPA standard of 516 ng/J
Sorbent Type - dolomite
Layout - four pressurized boiler modules, four parallel regeneration trains, single sulfur recovery plant
Spent Sorbent Processing - none; sorbent is disposed of following regeneration
Sorbent Circulation System - dilute pneumatic transport
Sulfur Recovery Tail-Gas - incinerated and exhausted

Three regeneration schemes are evaluated: a pressurized reductive decomposition scheme, an atmospheric-pressure reductive decomposition scheme, and a two-step process. The specific process options for each of these regeneration processes was selected on the basis of the results of previous engineering assessments and are presented in Table 19. Selected regeneration process operating conditions and projected performance levels are summarized in Table 20. Sulfur dioxide concentrations of 1 and 2 vol % from the regenerator are examined for the 1000 kPa reductive decomposition process because the achievable level for this critical performance factor has not been demonstrated. These SO_2 levels are suggested by small-scale experimental work and thermodynamic predictions. A level of 10 vol % is assumed for the low-pressure reductive decomposition process. An H_2S level of 3 vol % is assumed for the two-step regeneration process. The combustor

TABLE 18. PROCESS SULFUR LOAD

	Process Sulfur Load[a]		
	0.06	0.03	0.01
Coal Sulfur, wt %[b]	7.2	4.0	1.8
Combustor Sulfur Removal Efficiency, %[c]	93	85	65
Sulfur Production Rate, Mg/hr[d]	282	141	42
Sorbent Circulation Rate, Mg/hr[e]	150	85	30

(a) Defined as W_s $(\eta - mX_s)$, where W_s is the sulfur content of the coal (weight fraction), η is the boiler sulfur removal efficiency (fraction), m is the boiler Ca/S makeup ratio, and X_s is the fractional utilization of the sorbent material following regeneration.

(b) Based on values of m = 1.0 and X_s = 0.1.

(c) Based on satisfying SO_2 emission standard of 516 ng/J and a recovery efficiency for the sulfur recovery process of 90%.

(d) Based on coal heating value of 30,000 kJ/kg.

(e) Based on a 30 percent dolomite utilization before regeneration and a 10 percent utilization after.

operating conditions are assumed to result in calcination of the dolomite, a critical factor for the two-step regeneration process. A dolomite makeup rate (Ca/S ratio) of 0.5 to 1.0 moles of calcium per mole of sulfur fed to the combustor is assumed on the basis of existing bench-scale data for the reductive decomposition regeneration processes and a ratio of 1.0 to 2.0 for the two-step process.[57,59,61] The sorbent feed rate is selected to meet the current EPA NSPS of 516 ng/J for SO_2 from the combustor.

TABLE 19. SELECTION OF PROCESS OPTIONS

Reductive Decomposition Processes
Reductant gas generation - in situ with regenerator
Fuel for reductant - coal
Sulfur recovery form - elemental sulfur and sulfuric acid evaluated
Sulfur recovery process - Allied Chemical process with methane reductant (see Section 4)
Two-Step Regeneration Process
Reductant gas generation for sulfide generation step - in situ with first-step reactor
Fuel for reductant - coal
Source for CO_2 recovery - stack gas
Sulfur recovery form - elemental sulfur
Sulfur recovery process - Stretford process (see Section 4)
CO_2 recovery process - Benfield Hot Carbonate process (see Section 4)
Recarbonation of sorbent by stack gas contacting prior to regeneration

Process Performance Projections

Some key performance characteristics of the PFBC regeneration systems evaluated are summarized in Table 21 as a function of the process sulfur load. Auxiliary power requirements (for the sulfur recovery process, for the compression of air and stack gas, and for sorbent circulation), the rate of coal consumption for regenerator reductant, the rate of methane consumption for sulfur recovery, and the rate of steam consumption are estimated. The regeneration processes are large power and fuel consumers, and the process designs must be concerned with maximum energy recovery. The energy content of the regenerator product gas is used to provide the regeneration process auxiliary power requirements. No energy

TABLE 20. OPERATING CONDITIONS AND PERFORMANCE PROJECTIONS

Reductive Decomposition	Atmospheric Pressure	Pressurized
Regenerator pressure, kPa	150	1000
Regenerator temperature, °C	1050	1100
SO_2 mole percentage produced	10	1-2
Sulfur recovery efficiency, %	90	90
Dolomite utilization in boiler, %	30	30
Dolomite utilization after regeneration, %	10	10
Dolomite makeup rate, Ca/S	0.5-1.0	0.5-1.0
Fluidization velocity, m/s	1.5	1.5
Boiler conditions	Calcining	Calcining
Calcium sulfide in sorbent,%	0	0
Two-Step Regeneration		
$CaSO_4$ reducer pressure, kPa/temperature, °C		900/815
H_2S generator pressure, kPa/temperature, °C		1100/680
H_2S mole percentage produced		3
Sulfur recovery efficiency, %		90
Dolomite utilization in boiler, %		30
$CaSO_4$ reduced to CaS in reducer, %		100
Dolomite utilization after regenerator, %		10
Dolomite makeup rate, Ca/S		1.0-2.0
Fluidization velocity, m/s		1.5
Boiler conditions		Calcining
CaO recarbonated in precarbonator, %		50
Ratio of steam to CO_2 in reactant gas		1

TABLE 21. PERFORMANCE PROJECTIONS

	Reductive Decomposition									Two-Step Process 3% H_2S		
	1% SO_2			2% SO_2			10% SO_2					
Process Sulfur Load	0.06	0.03	0.01	0.06	0.03	0.01	0.06	0.03	0.01	0.06	0.03	0.01
Auxiliary Power, MWe	70	37	15	41	22	10	21	12	6	69	39	15
Coal Consumption, % of boiler coal input	69	35	12	34	17	6	6	3	1	29	15	5
Methane Consumption, kJ/hr, 10^6	272	136	41	272	136	41	260	130	40	0	0	0
Steam Consumption, % of power plant fuel input	0	0	0	0	0	0	0	0	0	5	3	1
Technical Uncertainties	Energy recovery, sulfur recovery			Energy recovery, sulfur recovery			Temperature control, solids circulation system operability			Energy recovery, sorbent deactivation		

is exported from the regeneration process to the plant power cycle in this evaluation, although this may be called for in an optimized power plant. The sulfur added to the regeneration process in the reductant coal has been neglected, though it will have a very significant impact on the processes in most cases.

Several technical uncertainties exist for each of the regeneration schemes. The high-pressure reductive decomposition processes (1 and 2 percent SO_2) require very large coal inputs and auxiliary power consumption. The efficiency and operability of energy recovery is technically uncertain, along with the operability and controllability of sulfur recovery with such low SO_2 concentrations. The two-step regeneration process is characterized by the additional technical uncertainty that the regeneration process itself may be effective in producing an active sorbent material. The low-pressure reductive decomposition process consumes power and coal at a lower rate, but its operability and reliability is in question because of the complexity of the solids circulation system.

Capital Investment

Estimates of capital investment for the regeneration processes (not for the total PFBC power plant) have been developed with the following basis:

- Mid-1977 costs
- 635 MWe power plant
- Interest during construction, general items, and engineering are not included.
- All other direct and indirect cost items are included.

The estimated investments are presented as a function of the process sulfur load in Tables 22 through 25.

The most expensive process section for the pressurized reductive decomposition process is the sulfur recovery or sulfuric acid recovery section. The sorbent circulation section is the most expensive section

TABLE 22. INVESTMENT FOR PRESSURIZED REDUCTIVE DECOMPOSITION PROCESS - 1 PERCENT SO_2, $/kW

Process Section	Process Sulfur Load		
	0.06	0.03	0.01
Regeneration	15.6	10.6	4.8
Sorbent Circulation	16.9	16.1	15.1
Sulfur Recovery	92.3	60.8	29.5
(Sulfuric Acid Recovery	(55.3)	(36.5)	(17.6)
Total	124.8 (87.8)	87.5 (63.2)	49.4 (37.5)

TABLE 23. INVESTMENT FOR PRESSURIZED REDUCTIVE DECOMPOSITION PROCESS - 2 PERCENT SO_2, $/kW

Process Section	Process Sulfur Load		
	0.06	0.03	0.01
Regeneration	10.5	5.7	3.2
Sorbent Circulation	16.9	16.1	15.1
Sulfur Recovery	68.2	45.0	21.8
(Sulfuric Acid Recovery)	(44.2)	(29.2)	(14.2)
Total	95.6 (71.6)	66.8 (51.0)	40.1 (32.5)

TABLE 24. INVESTMENT FOR LOW-PRESSURE REDUCTIVE DECOMPOSITION PROCESS - 10 PERCENT SO_2, $/kW

Process Section	Process Sulfur Load		
	0.06	0.03	0.01
Regeneration	11.4	7.8	3.1
Sorbent Circulation	31.9	31.1	30.1
Sulfur Recovery	27.7	18.3	8.8
(Sulfuric Acid Recovery)	(18.4)	(12.2)	(5.9)
Total	71.0 (61.7)	57.2 (51.1)	42.0 (39.1)

TABLE 25. INVESTMENT FOR TWO-STEP PROCESS, $/kW

Process Section	Process Sulfur Load		
	0.06	0.03	0.01
Regeneration	7.3	5.1	2.8
Sorbent Carbonation	41.7	27.1	12.5
Sorbent Circulation	16.9	16.1	15.1
CO_2 Recovery	10.7	7.5	3.8
Sulfur Recovery	36.9	24.3	11.8
Total	113.5	80.1	46.0

for the low-pressure reductive decomposition process, requiring complex lockhoppers with water-cooled valves. Although sulfuric acid recovery is considerably cheaper than sulfur recovery, the market and storage questions must be resolved for each specific location. Sulfur recovery has generally been selected as the preferred option.

Sulfur recovery and sorbent recarbonation (by stack-gas carbonation of the sorbent in fluidized-bed reactors) represent the most expensive process sections for the two-step regeneration process.

While the low-pressure reductive decomposition process has the lowest capital investment, the major technical uncertainties associated with the sorbent circulation system must be acknowledged.

Energy Cost

Energy costs associated with each of the regeneration processes have been projected using the following basis:

- Costs for the regeneration process only do not include the cost of coal, capital charges, and operating and maintenance charges for the balance of the power plant.
- Interest during construction included at 7-1/2%/yr, 3-1/2 yr construction time
- Mid-1977 costs
- Capital charges 15%/yr
- Operating and maintenance cost 5% of investment per year
- 70% plant capacity factor
- Sulfuric acid recovery not considered
- No credit for sulfur produced
- Coal at $0.80/GJ (~$80/Mg)
- Methane at $1/GJ
- Dolomite at $10/Mg (purchase plus disposal)
- Sorbent Ca/S ratio of 1.0 for all three process sulfur loads to achieve current new source pollution standards.

For a once-through sorbent operation with dolomite, the required Ca/S ratios as a function of the process sulfur load are given as follows, based on a once-through sorbent utilization of 50 percent:[62]

Process Sulfur Load	Once-through Ca/S
0.06	1.7
0.03	1.5
0.01	1.2

Tables 26 through 29 give the projected energy costs for the regeneration processes and compare them to the once-through operation energy cost (energy cost of regeneration process minus cost of sorbent for the once-through process are assumed to be identical with the regenerative systems, within the accuracy of these cost estimates.

The energy costs of the regeneration processes are considerably greater than the energy costs of once-through sorbent operation using the basis applied in this study. For the assumption that the $8/Mg regenerative processes may be operated with a Ca/S ratio of 0.5, the cost to which dolomite must rise in order to result in a once-through energy cost identical with that of regenerative energy is shown in Table 30. For comparison, a typical cost of sorbent (fresh sorbent plus disposal) is currently $8/Mg.

If the cost of dolomite (delivered cost plus disposal cost) should reach levels as high as are shown in Table 30, the regeneration processes will still have to demonstrate the operability and reliability required by an electric utility in order to be acceptable.

Economic Comparison with Limestone Wet-Scrubbing

The pressurized fluidized-bed combustion power plant with regenerative sorbent operation must compete economically with commercial power generation systems such as a conventional coal-fired power plant with limestone wet-scrubbing of the plant stack gases. The investment cost of a conventional plant with limestone wet-scrubbing is estimated to be

TABLE 26. ENERGY COST FOR PRESSURIZED REDUCTIVE DECOMPOSITION - 1 PERCENT SO_2, mills/kWh

	Process Sulfur Load		
	0.06	0.03	0.01
Capital Charges	3.57	2.50	1.42
Operating and Maintenance	1.19	0.83	0.47
Coal	5.14	2.57	0.77
Methane	0.45	0.23	0.07
Dolomite	1.64	0.90	0.35
Total	11.99	7.03	3.07
Regeneration Energy Cost minus Once-through Energy Cost	9.20	5.68	2.65

TABLE 27. ENERGY COST FOR PRESSURIZED REDUCTIVE DECOMPOSITION - 2 PERCENT SO_2, mills/kWh

	Process Sulfur Load		
	0.06	0.03	0.01
Capital Charges	2.74	1.91	1.15
Operating and Maintenance	0.91	0.63	0.39
Coal	2.54	1.27	0.38
Methane	0.45	0.23	0.07
Dolomite	1.64	0.90	0.35
Total	8.28	4.94	2.34
Regeneration Energy Cost minus Once-through Energy Cost	5.49	3.59	1.92

TABLE 28. ENERGY COST FOR LOW-PRESSURE REDUCTIVE DECOMPOSITION - 10 PERCENT SO_2, mills/kWh

	Process Sulfur Load		
	0.06	0.03	0.01
Capital Charges	2.04	1.64	1.21
Operating and Maintenance	0.68	0.55	0.40
Coal	0.47	0.23	0.07
Methane	0.45	0.23	0.07
Dolomite	1.64	0.90	0.35
Total	5.28	3.55	2.10
Regeneration Energy Cost minus Once-through Energy Cost	2.49	2.20	1.68

TABLE 29. ENERGY COST FOR TWO-STEP REGENERATION PROCESS, mills/kWh

	Process Sulfur Load		
	0.06	0.03	0.01
Capital Charges	3.25	2.29	1.32
Operating and Maintenance	1.09	0.76	0.44
Coal	2.17	1.09	0.32
Dolomite	1.64	0.90	0.35
Total	8.15	5.04	2.43
Regeneration Energy Cost minus Once-through Energy Cost	5.36	3.69	2.01

TABLE 30. COST OF DOLOMITE (PURCHASE PLUS DISPOSAL) REQUIRED TO GIVE EQUAL ONCE-THROUGH AND REGENERATIVE COSTS, $/Mg[a]

Regeneration Process	Process Sulfur Load		
	0.06	0.03	0.01
Reductive Decomposition with 1% SO_2	57	73	118
Reductive Decomposition with 2% SO_2	38	50	88
Reductive Decomposition with 10% SO_2	23	34	79
Two-Step Regeneration	37	51	92

[a]Basis: Regenerative Ca/S = 0.5

about $570/kW[1] (mid-1977 dollars, 635 MWe capacity) and the energy cost about 23.7 mills/kWh ($10/Mg for limestone, coal at $0.80/GJ, steam at $2.2/10^3$ kg, process water at $0.05/10^3$ ℓ, capital charges at 15%/yr, process sulfur load of 0.03).

A pressurized fluidized-bed combustion power plant is estimated to represent an investment of about $424/kW (once-through with no spent sorbent processing), with an energy cost of about 18.4 mills/kWh, not including the cost of sorbent.[1] Costs for the conventional power plant and the PFBC power plant are taken from a previous Westinghouse study,[57] are on a constant basis, and have been scaled to mid-1977 dollars. The investment costs and energy costs of regenerative pressurized fluidized-bed combustion (with elemental sulfur recovery) are compared with a conventional power plant in Table 31 based on a process sulfur load of 0.03 (4.0 wt % sulfur coal) and a dolomite cost of $10/Mg. The

TABLE 31. COMPARISON OF REGENERATIVE PRESSURIZED FLUID-BED COMBUSTION WITH CONVENTIONAL COAL-FIRED POWER GENERATION

	Capital Investment ($/kW)	Energy Cost (mills/kWh)
Conventional Plant	570	23.7
Once-through PFBC	424	19.8
Regenerative PFBC		
Reductive decomposition with 1% SO_2	526	25.4
Reductive decomposition with 2% SO_2	502	23.3
Reductive decomposition with 10% SO_2	491	22.0
Two-step regeneration	518	23.4

regenerative PFBC costs are produced by adding interest during construction, general items, and engineering to the investments in Tables 22 through 25 (about 17% increase) and adding those costs to $424/kW. Energy costs are obtained by adding the cost in Tables 26 through 29 to 18.4 mills/kWh.

While these are always uncertainties associated with cost estimate comparisons, these estimates are on a sufficiently consistant basis to conclude that the only regenerative PFBC power generation system that compares favorably with the conventional power plant with limestone wet-scrubbing is the system based on low-pressure reductive decomposition. The pressurized reductive decomposition with 2 percent SO_2 and the two-step regenerative PFBC power generation systems are comparable to the conventional power plant. The pressurized reductive decomposition with 1 percent SO_2 results in a PFBC power plant that is not competitive with the conventional power plant.

Environmental Comparison

The environmental performance of the regeneration processes for PFBC is compared with that of once-through PFBC and conventional coal-fired power plants with limestone wet-scrubbing in Table 32. All of the power generation systems are assumed to satisfy the current EPA new source emissions standards (SO_2, NO_x, particulates) for large coal-fired plants.

The low-pressure reductive decomposition process is the most environmentally satisfactory of the regeneration processes. The once-through PFBC operation is environmentally superior to the regeneration processes in all aspects except spent sorbent production. The environmental impact of the regenerative spent sorbent versus the once-through spent sorbent due to differences in chemical nature is not known. The conventional power plant with limestone wet-scrubbing requires coal consumption at a greater rate than all of the PFBC power plants except for the pressurized reductive decomposition with 1 vol % SO_2. The limestone wet-scrubbing produces a spent sludge material requiring large land usage for a pond.

ASSESSMENT

An integrated PFBC regeneration system has yet to be demonstrated. Most performance data have been generated on small-scale, batch, and semicontinuous apparatus, and reliable information concerning the critical performance factors for commercial operation is not available.

The technical performance of the three PFBC sorbent regeneration schemes evaluated is uncertain. The pressurized reductive decomposition will result in such low SO_2 concentrations (1 to 2 vol %) that huge amounts of coal for reductant will be required, and complex energy recovery and sulfur recovery systems will be necessary. The low-pressure reductive decomposition appears technically favorable except for major uncertainties in the solids transport system. Sulfur recovery will be nearer conventional practice with the two-step regeneration since H_2S

TABLE 32. COMPARISON OF ENVIRONMENTAL IMPACTS FOR PFBC AND CONVENTIONAL POWER PLANTS[a]

	PFBC with Pressurized Reductive Decomposition		PFBC with Low-Pressure Decomposition, 10% SO_2	PFBC with Two-Step Regeneration, 3% H_2S	PFBC Once-through Operation	Conventional Power Plant[b]
	1% SO_2	2% SO_2				
Plant Heat Rate,[c] KJ/kWh	12,400	10,800	9,600	10,400	9,040	∿11,000
Raw Materials						
Coal input,[d] Mg/hr	263	228	201	224	195	237
Sorbent input,[e] MG/day	588-1175	588-1175	588-1175	1175-2350	1,763	840
Methane input,[f] 10^6 kJ/hr	136	136	130	0	0	0
Plant Exports						
Spent sorbent,[g] Mg/day	435-870	435-870	435-870	870-1740	1,900	1,850
Ash[h], Mg/day	631	547	482	538	468	569
Sulfur,[i] Mg/day	141	141	141	141	0	0

(a) Basis: 635 MWe power plant capacity, 4 wt % sulfur coal, current emission standards for SO_2, NO_x, and particulates satisfied - 516 ng/J, 43 ng/J, and 30 ng/J, respectively.
(b) New plant with limestone wet-scrubbing.
(c) Includes auxiliary coal and methane input.
(d) Includes coal for regeneration reductant.
(e) Ca/S (dolomite) of 0.5-1.0 for reductive decomposition, 1.0-2.0 for two-step regeneration, 1.5 for once-through PFBC, and 1.2 (limestone) for limestone wet-scrubber.
(f) Methane used in sulfur recovery system only.
(g) Dry, granular for PFBC, limestone sludge for wet-scrubber.
(h) 10 wt % ash in coal.
(i) Sulfur in auxiliary coal is neglected.

rather than SO_2 is generated, but large amounts of power, coal, and steam are consumed, again requiring complex energy recovery. The ability of the two-step regeneration process to produce an active sorbent material is also questioned. All of the regeneration processes are complex and their operability and reliability are major concerns.

The overall environmental performance of the low-pressure reductive decomposition is superior to the other regeneration processes. Both the pressurized and the low-pressure reductive decomposition processes require the consumption of clean fuels such as methane in the sulfur recovery system. The once-through sorbent operation is superior to the regenerative operations in all environmental aspects except the quantity of spent sorbent produced.

The only regenerative PFBC power plant that is economically attractive when compared to a conventional power plant with limestone wet-scrubbing is based on low-pressure reductive decomposition. The once-through PFBC power plant has a considerably lower energy cost, based on a dolomite cost of $10/Mg, than any of the regenerative power plants.

A regenerative system modeling study is being initiated to assess the regeneration technology and process economics in greater detail. The computer study will permit data being generated by facilities such as the Exxon miniplant to be evaluated quickly and comprehensively in order to aid the experimental program direction.

SECTION 7

NOMENCLATURE

m = Ca/S mole ratio, moles of calcium in the fresh sorbent per mole of sulfur to the boiler

Mg = megagrams (10^6 grams)

n = sulfation cycle number

N = number of regenerator modules

PSL = process sulfur load, $W_s(\eta - mX_S^B)$

R = rate of sorbent circulation in moles of calcium per unit mass of coal fed to the combustor

U = regenerator superficial fluidization velocity

V_g = molar volume of regenerator off-gas

V_s = particle volume per mole of calcium

W_s = lb of sulfur per lb of coal

X = extent of CaO regeneration

X_S^B = mole fraction of calcium as sulfate in the sulfated sorbent

X_S^R = mole fraction of calcium as sulfate in the regenerated sorbent

y = mole fraction of SO_2 in the regenerator off-gas

h_s = height of the static bed

h_e = height of the expanded bed

α = fraction of calcium in the boiler rejected after each cycle

ε = regenerator bed expanded void fraction

η = boiler sulfur removal efficiency

T_g = residence time of gas in the regenerator

T_s = residence time of solids in the regenerator

Abbreviations

AFBB	atmospheric-pressure fluidized-bed boiler
AFBC	atmospheric-pressure fluidized-bed combustion
ANL	Argonne National Laboratory
FWEC	Foster Wheeler Energy Corporation
O&M	operating and maintenance
PER	Pope, Evans and Robbins
PFBB	Pressurized fluidized-bed boiler
PFBC	Pressurized fluidized-bed combustion
RESOX	Registered trademark of the sulfur recovery process under development by FWEC
SRP	sulfur recovery plant

SECTION 8

REFERENCES

1. Keairns, D. L., et al., Evaluation of the Fluidized-Bed Combustion Process Vol. I, Office of Research and Development, EPA, Westinghouse Research Laboratories, Pittsburgh, Pa. 15235, December 1973, EPA 650/2-73-048a, NTIS PB 231-162.

2. Proceedings of the Third International Conference on Fluidized Bed Combustion, Session on Sorbent Regeneration, October, 1972, EPA 650/2-73-053, NTIS PB 231-977.

3. Proceedings of the Fourth International Conference on Fluidized Bed Combustion, Session on Sorbent Regenerations, December, 1975, published by MITRE Corp., May, 1976.

4. Encyclopedia of Chemical Technology, Second Edition, Kirk-Othmer, New York: Interscience Publishers, 1963.

5. A Development Program on Pressurized Fluidized Bed Combustion, Annual Report, Office of Fossil Energy, ERDA, EPA, Argonne National Laboratory, Argonne, Illinois, 1976, ANL/ES-CEN-1016.

6. Craig, J. W. T., et al., Chemically Active Fluid-Bed Process for Sulfur Removal During Gasification of Heavy Fuel Oil-Second Phase, EPA, Esso Research Centre, Abingdon, England, Nov. 1974, EPA 650/2-75-109, NTIS PB 240-632.

7. Studies of the Pressurized Fluidized-Bed Coal Combustion Process, Office of Research and Development, EPA, Exxon Research and Engineering Co., Linden, N.J., September 1977, EPA 600/7-77-107, NTIS PB 272-722.

8. Proceedings of a Workshop on Regeneration of Sulfated Limestone/ Dolomite for Fluidized Bed Combustion, Foster Wheeler presentation, ERDA, Washington, D.C., March 1975, Prepared by Gilbert Associates, Reading, Pa.

9. Hammons, G. A., and A. Skopp, A Regenerative Limestone Process for Fluidized Bed Coal Combustion and Desulfurization, Exxon Research and Engineering Co., Linden, N.J. Final Report for Contract No. EPA 70-19 (Feb., 1971).

10. Swift, W. M., and T. D. Wheelock, "Decomposition of Calcium Sulfate in a Two-Zone Reactor," Ind. Eng. Chem. Process Des. Dev., 14(3), 323 (1975).

11. Shang, J. Y., and R. A. Chronowski, Comparison of AFBC with PFBC, Proceedings of the Fourth Intern. Conf. on Fluidized Bed Combustion, December, 1975, Published by Mitre Corporation.

12. Keairns, D. L., et al., Evaluation of the Fluidized-Bed Combustion Process, Vol. II - Fluidized-Bed Boiler Combined-Cycle Power Plant Development, Vol. I Appendices, Report to EPA, Westinghouse Research and Development Center, December 1973, EPA 650/2-73-048b, NTIS PB 231-163.

13. "Characterization of Claus Plant Emissions," Processes Research, Inc., 1973, EPA-R2-73-188.

14. Beavon, D. K., and R. N. Fleck, "Beavon Sulfur Removal Process for Claus Plant Tail Gas," in Sulfur Removal and Recovery from Industrial Processes, J. B. Pfeiffer, ed., American Chemical Society, Washington, DC, 1975, p. 93.

15. "Claus Technical and Economic Study," Shell Development Co., 1972. OAP Contract EHSD-71-45.

16. Goar, B. G., "Feed Gas Impurities Can Create Claus Plant Problems," Gas Conditioning Proceedings, p. C1-C18, 1974.

17. Richardson, F. P., "Applications of the Stretford Process to Large Coal Gasification Plants," Gas Conditioning Proceedings, p. I1-I7, 1974.

18. "Characterization of Sulfur Recovery from Refinery Fuel Gas," Battelle Columbus Laboratories, EPA, June 1974, NTIS PB 239-777.

19. Consolidation Coal Co., Inc., "Production of Clean Fuel Gas from Bituminous Coal," EPA 650/2-73-049, December 1973.

20. Semrau, K., "Controlling the Industrial Process Sources of Sulfur Oxides," in Sulfur Removal and Recovery from Industrial Processes, J. B. Pfeiffer, ed., Washington, DC: Americal Chemical Society, 1975, p. 1.

21. "Applicability of Reduction to Sulfur Techniques to the Development of New Processes for Removing SO_2 from Flue Gases," Final Report, Volume I, Allied Chemical Corporation, 1969, PH-22-68-24, NTIS PB 198-407.

22. "Claus Technical and Economic Study," Shell Development Co., 1972, OAP Contract EHSD-71-45.

23. Henderson, J. M., and J. B. Pfeiffer, in Sulfur Removal and Recovery From Industrial Processes, J. B. Pfeiffer, ed., Washington DC: American Chemical Society, 1975, p. 35.

24. "Sulfur Dioxide: Its Chemistry as Related to Methods for Removing it from Waste Gases," U.S. Bureau of Mines, June 1973, NTIS PB 221-899.

25. "Evaluation of the Regenerative Pressurized Fluidized Bed Combustion Process," EPA, M. W. Kellogg Co., 1974, EPA 650/2-74-012, NTIS PB 232 012.

26. Hunter, W. D., Jr., et al., "The Allied Chemical Sulfur Dioxide Reduction Process for Metallurgical Emissions," in Sulfur Removal and Recovery from Industrial Processes, Washington, DC, 1975, p. 23.

27. Connor, J. M., "Economics of Sulfuric Acid Manufacture, in Sulfur and SO_2 Developments," CEP Technical Manual, AIChE, 13 (1971).

28. "Engineering Analysis of Emissions Control Technology for Sulfuric Acid Manufacturing Processes," Chemical Construction Corp., 1970, NTIS PB 190-393.

29. Katell, S., J. H. Faber, "An Economic Study of the Hot Carbonate Process for Removing Carbon Dioxide," U.S. Bureau of Mines Information Circular 7952, 1960.

30. Stzelzoff, S., "Choosing the Optimum CO_2-removal System," Chemical Engineering, 115, September, 1975.

31. Perry, R. H., and C. H. Chilton, eds., Chemical Engineering Handbook, 5th Edition, New York: McGraw Hill Book Co., 1973.

32. Sittig, M., "Catalytic Cracking Techniques in Review," Petroleum Refiner, 31, 263 (1952).

33. Carroll, P. J., H. Colijn, "Vibrations in Solids Flow," Chemical Engineering Progress, 71 (21, 53 (1975)).

34. Discussions with Eriez Magnetics, Erie, Pa. at Westinghouse R&D Center, Pgh., PA, on June 23, 1976.

35. Yang, W. C., "A Unified Theory on Dilute Phase Pneumatic Transport," Presented at Int. Powder and Bulk Solids Handling and Processing Conference, Chicago, IL, May 11-13, 1976.

36. Stoess, H. A., Jr., Pneumatic Conveying, New York: Wiley-Interscience, 1970.

37. Leung, L. S., L. A. Wilson, Downflow of Solids in Standpipes, Powder Technology, 7, 343 (1973).

38. Matsen, J. M., "Flow of Fluidized Solids and Bubbles in Standpipes and Risers," Powder Technology, 7, 93 (1973).

39. Matsen, J. M., "Some Characteristics of Large Solids Circulation Systems," Fluidization Technology, Vol. II, D. L. Keairns, Ed., New York: McGraw-Hill Book Co., 1976, p. 135.

40. Kunii, D., et al., "Flow Characteristics of Circulation Systems with Two Fluidized Beds," Int. Chem. Eng., 14(3), 588 (1974).

41. Capes, C. E., "Dense Phase Vertical Pneumatic Conveying," Canadian Journal of Chem. Eng., 49, 182 (1971).

42. Capes, C. E., et al., "Method and Apparatus for Conveying Particulate Material Upwardly in a Gas Stream," U.S. Pat. 3,776,601, December 1973.

43. Wen, C. Y., and H. P. Simons, "Flow Characteristics in Horizontal Fluidized Solids Transport," AIChe, Journal, 5(2), 263 (1959).

44. Fricke, H. D., et al., "Flow Studies of Dense-Phase Gas/Solid Suspensions with a Positive Expulsion Fluidization Tank," presented 2nd Symposium on Storage and Flow of Solids (ASME), Chicago, Ill., September 1972.

45. Chari, S. S., "Pressure Drop in Horizontal Dense Phase Conveying of Air-Solid Mixtures," AIChE 63rd Annual Meeting, Chicago, Ill., November 1970.

46. Petersen, D. H., "Plug Conveying - An Economic, Pneumatic Transport System," Aufberitungs-Technik, Nr. 1, 35 (1973).

47. Flain, R. J., "Pneumatic Conveying: How the System is Matched to the Materials," Process Engineering, 88 (Nov. 1972).

48. Keairns, D. L., et al., "Fluidized Bed Combustion Process Evaluation," Vol. II, Westinghouse Research Laboratories, Pittsburgh, Pa., 15235, EPA, March 1975, EPA 650/2-75-027-b, NTIS PB 241- 835.

49. Zenz, F. A., and P. N. Rowe, "Particle Conveying in Extrusion Flow," Fluidization Technology, Vol. II, D. L. Keairns, Ed., New York: McGraw-Hill Book Co., 1976, p. 151.

50. Berg, C. H. O., "Conveyor of Granular Solids," U.S. Patent 2,684,868, 1954.

51. Berg, C. H. O., "Conveyance of Granular Solids," U.S. Patent 2,684,872, 1954.

52. Berg, C. H. O., "Conveyance of Granular Solids," U.S. Patent 2,684,870, 1954.

53. Muskett, W. J., et al., "The Fluidized Transport of Powdered Materials in an Air-Gravity Conveyor," Pneumo Transport 2, 2nd International Conference on Pneumatic Transport of Solids in Pipes, September 1973.

54. Siemes, W., and L. Hellmer, "Die Messung der Wirbelschichtviskositat mit der Pneumatischen Rinne," Chemical Engineering Science, 17, 555 (1962).

55. Verteshev, M. S., et al., "Horizontally Moving Fluidized Beds," Int. Chem. Eng., 9(3), 505 (1969).

56. Shinohara, K., and T. Tanaka, "A New Device for Pneumatic Transport of Particles," J. Chem. Eng. Japan, 5(3), 279 (1972).

57. Archer, D. H., et al., "Evaluation of the Fluidized Bed Combustion Process," Vol. II, Report to EPA, Westinghouse Research and Development Center, Pittsburgh, PA, November 1971, Contract 70-9, NTIS PB 212-916.

58. Steiner, P., et al., "Removal and Reduction of Sulfur Dioxides from Polluted Gas Streams," Advances in Chemistry Series, 139, 180 (1975).

59. Proceedings of a workshop on Regeneration of Sulfated Limestone/Dolomite for Fluidized Bed Combustion, Pope, Evans and Robbins, R&D Presentation, ERDA, Washington, DC, March 1975, prepared by Gilbert Associates, Reading, PA.

60. Criteria for the Selection of SO_2 Sorbents for Atmospheric Fluid Bed Combustors, Task 1 Report, Electric Power Research Institute, Inc., Westinghouse Research Laboratories, Pittsburgh, Pa., 15235 September 1976, Contract No. RP 721-1.

61. Jonke, A. A., et al., Reduction of Atmospheric Pollution by the Application of Fluidized-Bed Combustion, Annual Reports Argonne National Laboratory, July, 1968-July, 1969 and July, 1969-June 1970, NTIS ANL/ES-CEN-1001 and 1002.

62. Keairns, D. L., et al., "Fluidized Bed Combustion Report to EPA, Phase II-Pressurized Fluidized Bed Coal Combustion Development, Westinghouse Research Laboratories, Pittsburgh, PA, September, 1975, EPA - 650/2-75-027c, NTIS PB 246-116.

63. A Development Program on Pressurized, Fluidized-Bed Coal Combustion, Argonne National Laboratory, Argonne, Illinois, July 1975-June 1976, NTIS ANL/ES-CEN-1016.

64. A Development Program on Pressurized Fluidized Bed Combustion, Argonne National Laboratory, July 1976-June 1977, NTIS ANL/CEN/FE-77-3.

65. Archer, D. H., et al., "Evaluation of the Fluidized Bed Combustion Process," Vol. III, Report to EPA, Westinghouse Research and Development Center, Pittsburgh, Pa., November 1971, Contract 70-9, NTIS PB 213-152.

66. Keairns, D. L., et al., "Evaluation of the Fluidized-Bed Combustion Process, Pressurized Fluidized-Bed Combustion Process Development and Evaluation" - Vol. I; "Pressurized Fluidized-Bed Boiler Development Plant Design," Vol. III, Report to EPA, Westinghouse Research and Development Center, Pittsburgh, Pa., December 1973, EPA-650/2-73-048a and c, NTIS PB 231-162, 232-433.

APPENDIX A

EFFECT OF VARIOUS FACTORS ON REGENERATOR SO_2 CONCENTRATION

A brief study has been made to estimate the maximum concentration of SO_2 that can be obtained in the regenerator effluent gas and to identify the factors that limit that concentration. The effect of heat losses, air preheat temperature, and type of fuel on the SO_2 level was studied from the point of view of material and energy balance. Design and operating conditions selected for the study are the same as those given earlier. The following assumptions are made:

- No CaS is formed.
- Two cases were considered. In the first case, no CO or H_2 was assumed to be present in the exit gas. In the second case, the water-gas shift reaction was assumed to be at equilibrium.
- Sulfur in the fuel to the regenerator is neglected.
- In-situ partial oxidation of coal or CH_4 for the reductant.

RESULTS

The equilibrium concentration of SO_2, as experimentally determined by Curran et al.,[1] is shown in Figure 25 for atmospheric pressure. For any other pressure the equilibrium concentration of SO_2 is equal to this value divided by the pressure in atmospheres. The equilibrium concentration obtained from standard thermodynamic data is also shown. The substantial difference between the two curves may be due to the formation of a solid solution from the two reactants.

Figure A1 shows the SO_2 concentration as a function of heat losses when coal is the fuel to the regenerator. The substantial increase in SO_2 level with the increase in air preheat temperature to 1038°C can

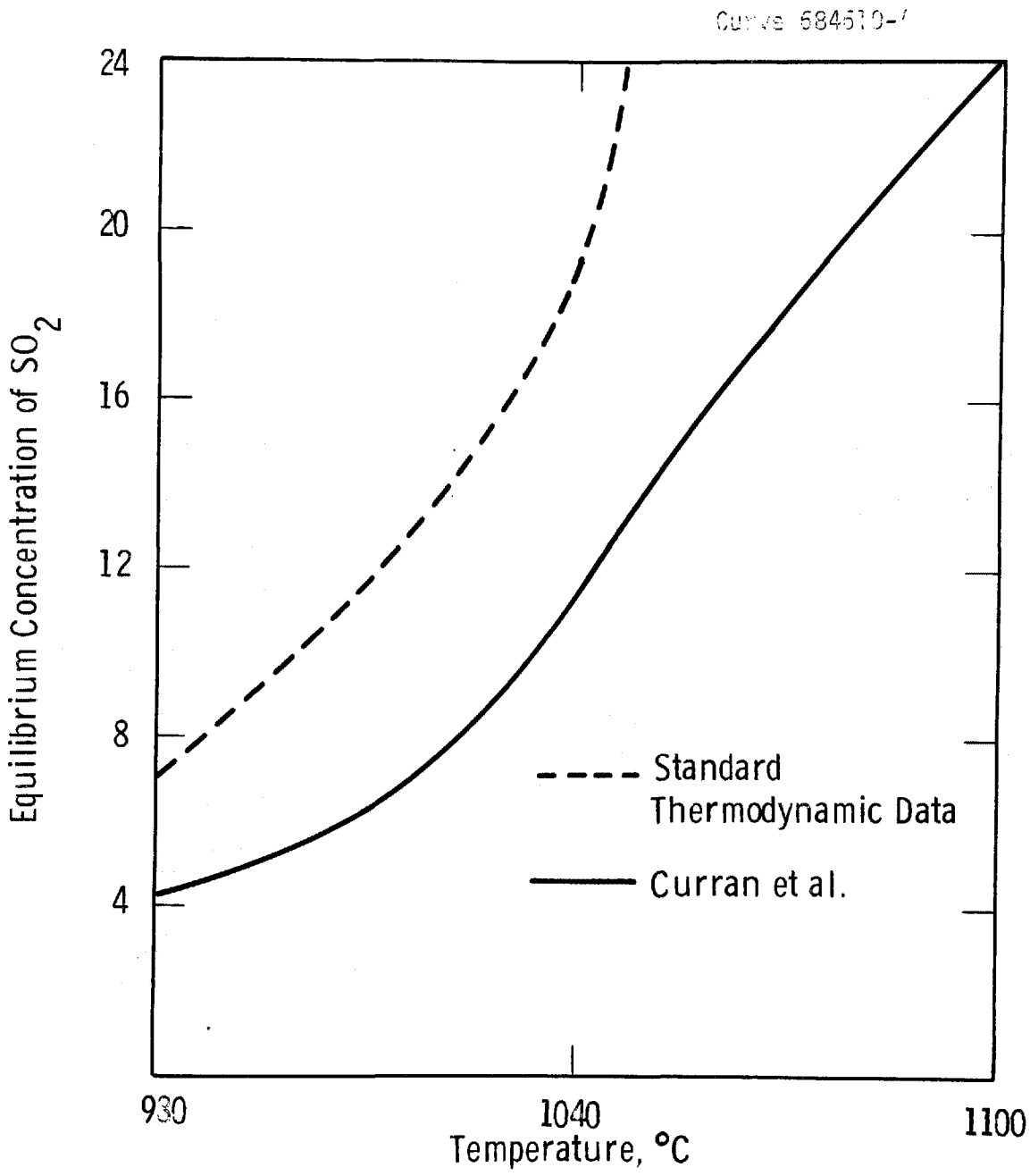

Figure A1. Equilibrium for 1/4 CaS + 3/4 $CaSO_4$ = CaO + SO_2 at 101 kPa

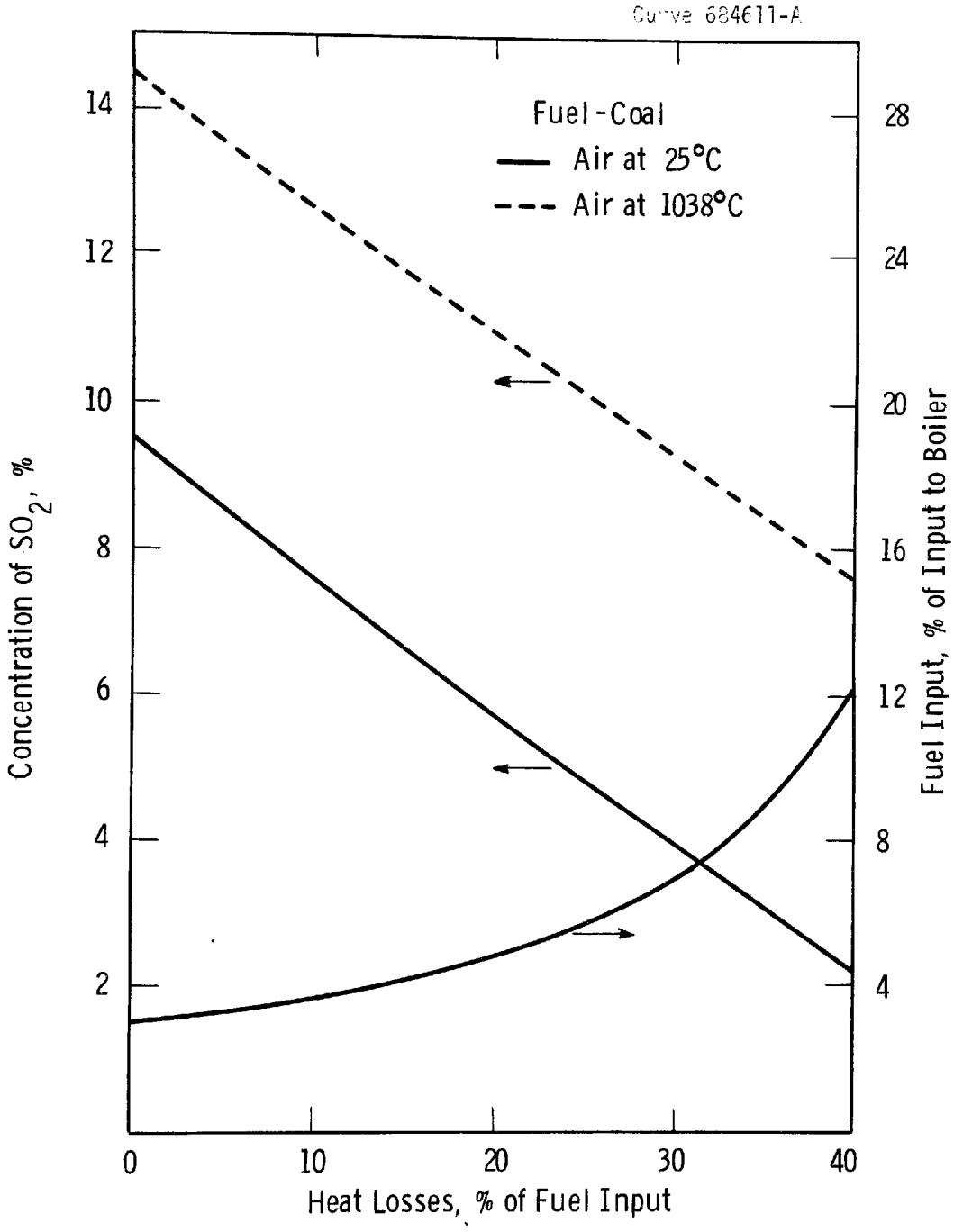

Figure A2. Effect of Heat Losses and Air Preheat Temperature on Concentration of SO_2 - Coal as Fuel

be noted. Heat input as a percentage of heat input to the fluid-bed boiler is also shown. No CO or H_2 was assumed to be present in the exit gas. Figure A3 shows the same results when methane is the fuel to the regenerator. The concentration of SO_2 is slightly higher in the case of coal. The above results would be valid even when the fuel is burned in a separate vessel to produce the reducing gas except for the additional heat losses since the results are based on material and energy balances.

The effect of the change in sorbent utilization across the regenerator on SO_2 level, sorbent circulation rate, and the fuel input is shown in Figure A4.

Figure A5 shows the concentration of SO_2 as a function of fuel input in the case of coal, where water-gas shift reaction is at equilibrium. Two curves are shown for air at room temperature and a preheat temperature of 1038°C when heat losses are negligible. A minimum concentration of SO_2 is indicated only when air is preheated; below this concentration, isothermal conditions in the regenerator cannot be maintained. The minimum fuel input corresponds to the case where no CO or H_2 is present in the exit gas. Any excess fuel reduces the concentration of SO_2 and results in the formation of CO and H_2. The effect of heat losses is also shown in curves 1 to 4 of Figure A5. The maximum SO_2 concentration in each case is shown by a vertical dotted line, and the percentage heat loss at this point is also indicated.

CONCLUSIONS AND RECOMMENDATIONS

- Based on material and energy balances, it is possible to achieve SO_2 levels greater than 10 percent at atmospheric pressure by preheating the air. At a temperature of 1100°C, the equilibrium concentration of SO_2 as obtained by Curran et al.[1] appears to be about 24 percent. Hence, material and energy balances would be the limiting factor at atmospheric pressure.

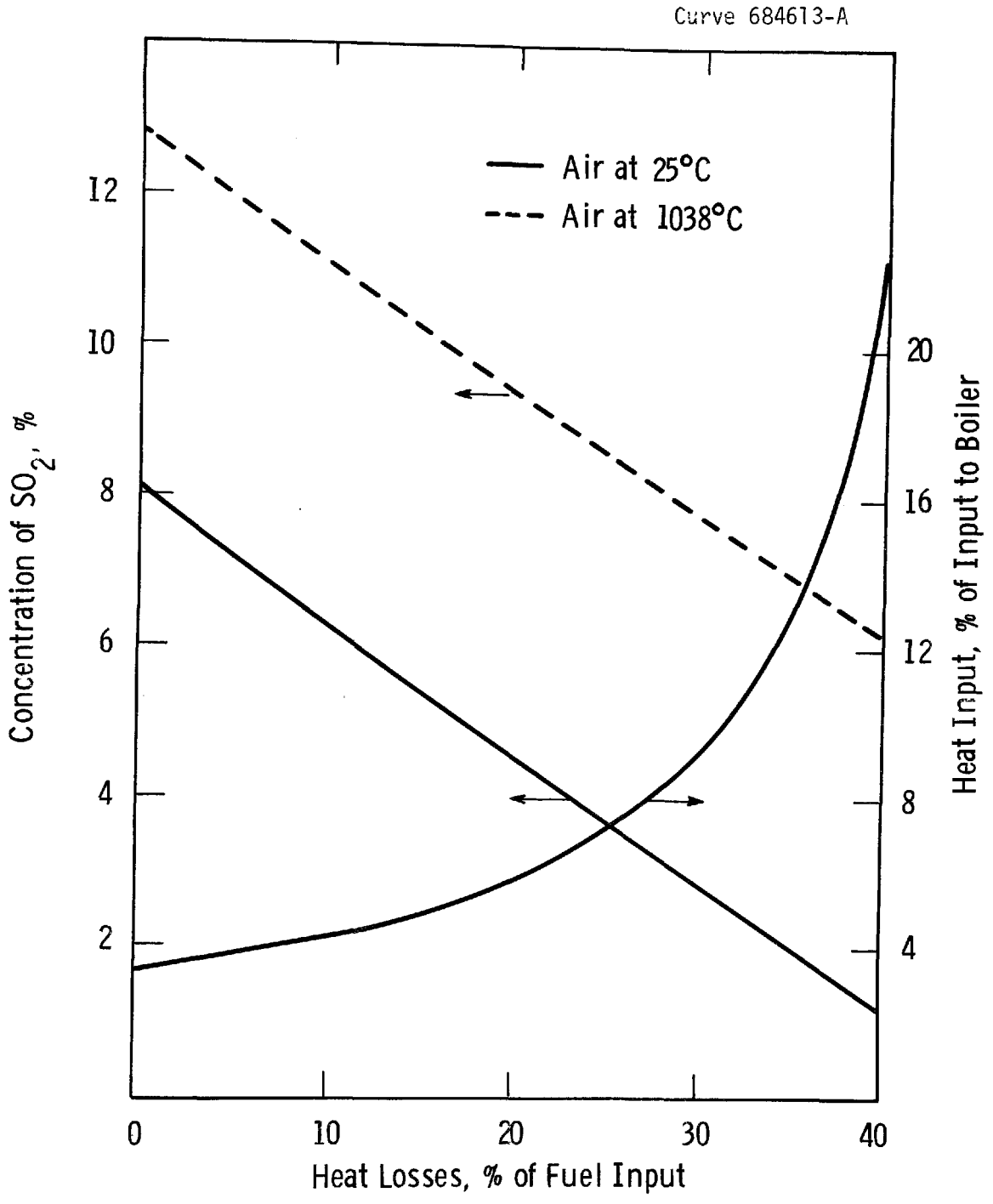

Figure A3. Effect of Heat Losses and Air Preheat Temperature on Concentrations of SO_2 - Methane as Fuel

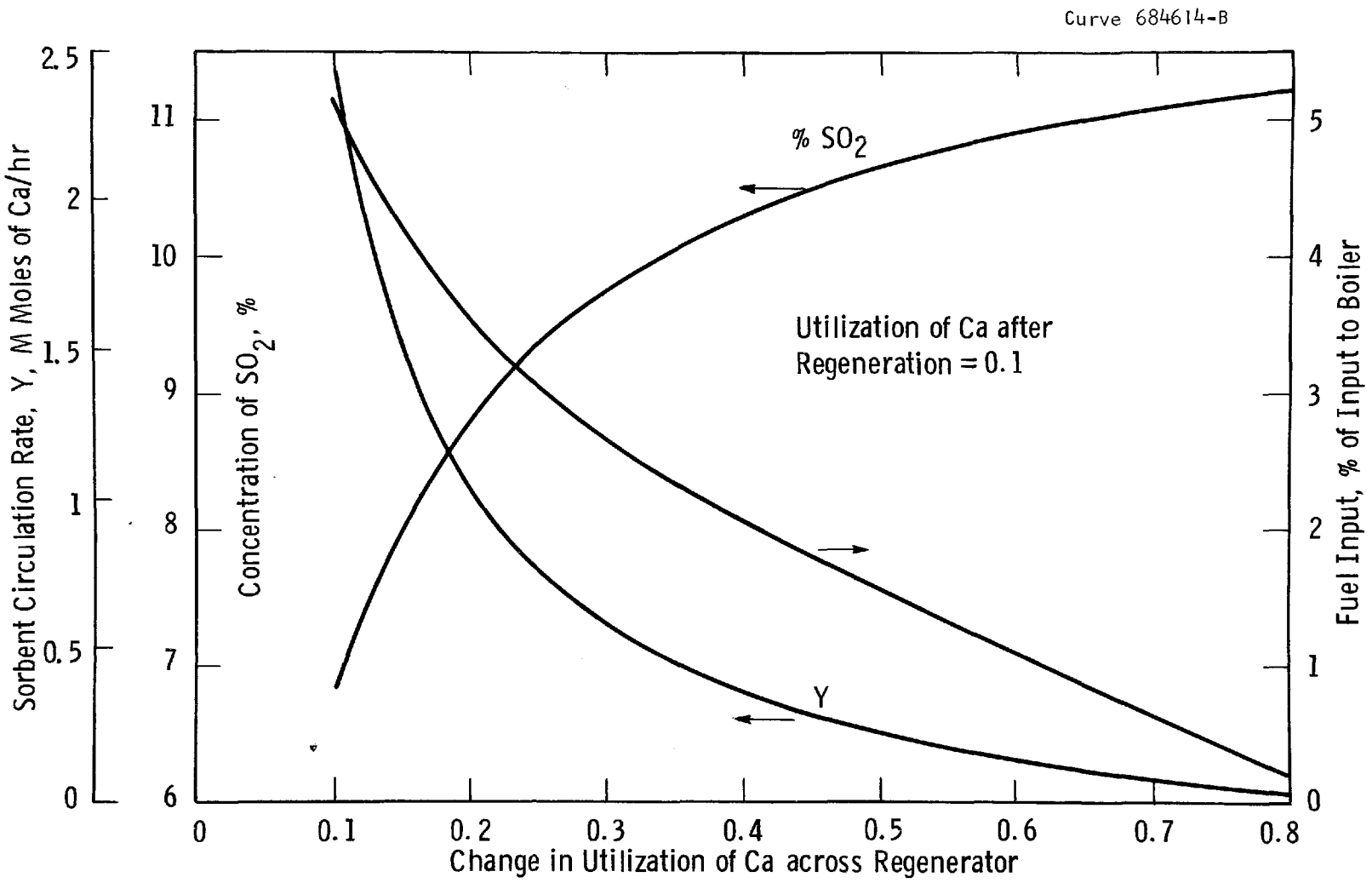

Figure A4. Effect of Change in Sorbent Utilization Across Regenerator on Concentration of SO_2 Sorbent Circulation and Fuel Input

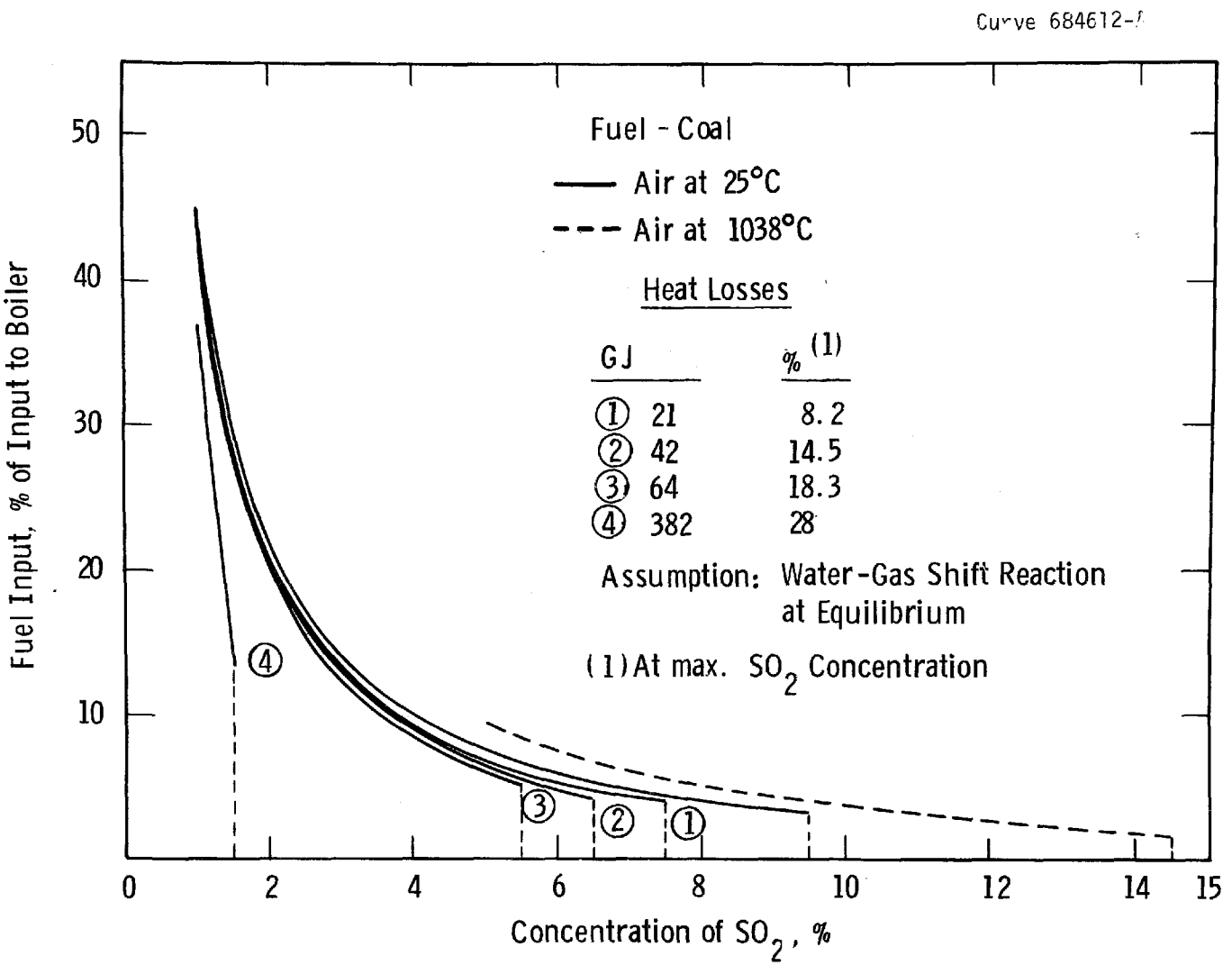

Figure A5. Effect of Heat Losses and Fuel Input on Concentration of SO_2

- Since the equilibrium concentration of SO_2 is inversely proportional to the total pressure, equilibrium would limit the SO_2 concentration for pressure higher about 200 kPa.
- Heat losses have a large impact on the SO_2 level. The low concentrations of SO_2 obtained in the work then possible, carried out at Exxon and Argonne National Laboratories, indicate that this may be because of the heat losses that can be expected to be higher in a small unit. Efforts should be directed toward preheating the air and insulating the regenerator to reduce the heat losses.
- The change in utilization of the sorbent across the regenerator also has a significant effect on the SO_2 concentration, particularly at lower levels of utilization. Considering the fuel input to the regenerator and the sorbent circulation rate in addition to the SO_2 level, the utilization should be greater than about 0.2.

REFERENCES

1. Curran, G. P., Fink, C. E. and Gorin, E., "CO_2 Acceptor Gasification Process," Advances in Chemistry Series 69, 141-165 (1967).

TECHNICAL REPORT DATA
(Please read Instructions on the reverse before completing)

1. REPORT NO. EPA-600/7-78-039	2.	3. RECIPIENT'S ACCESSION NO.
4. TITLE AND SUBTITLE Regeneration of Calcium-Based SO2 Sorbents for Fluidized-bed Combustion: Engineering Evaluation		5. REPORT DATE March 1978
		6. PERFORMING ORGANIZATION CODE
7. AUTHOR(S) R.A.Newby, S.Katta, and D.L. Kearns		8. PERFORMING ORGANIZATION REPORT NO.
9. PERFORMING ORGANIZATION NAME AND ADDRESS Westinghouse Research and Development Center 1310 Beulah Road Pittsburgh, Pennsylvania 15235		10. PROGRAM ELEMENT NO. EHE623A
		11. CONTRACT/GRANT NO. 68-02-2132
12. SPONSORING AGENCY NAME AND ADDRESS EPA, Office of Research and Development Industrial Environmental Research Laboratory Research Triangle Park, NC 27711		13. TYPE OF REPORT AND PERIOD COVERED Annual; 12/75-1/77
		14. SPONSORING AGENCY CODE EPA/600/13

15. SUPPLEMENTARY NOTES IERL-RTP project officer is D. Bruce Henschel, Mail Drop 61, 919/541-2825. Earlier report on this work is EPA-650/2-75-027c.

16. ABSTRACT The report gives results of an engineering evaluation of regeneration of calcium-based SO2 sorbents (limestone and dolomite) for application in both atmospheric and pressurized fluidized-bed combustion (FBC) processes. Economics of FBC power plants, operated with regeneration, are projected based on current estimates of regeneration process performance. Coal-fueled reductive decomposition is the regeneration process considered for atmospheric FBC; three regeneration schemes (two reductive decomposition processes and a two-step process) are evaluated for pressurized FBC. Estimated costs of FBC power plants with regeneration are compared with costs of FBC plants using once-through sorbent (no regeneration). The economic feasibility of the regenerative system depends on several variables, including in particular the sulfur concentration achievable in the regenerator off-gas, the reduction in fresh sorbent feed rate possible through regeneration, and the cost of fresh sorbent and of solid residue disposal. The performance required for the regenerative FBC system to achieve economic feasibility is projected, and critical development needs are discussed. An integrated regeneration system for both atmospheric and pressurized FBC, capable of achieving the performance necessary, has yet to be demonstrated experimentally.

17. KEY WORDS AND DOCUMENT ANALYSIS

a. DESCRIPTORS		b. IDENTIFIERS/OPEN ENDED TERMS	c. COSATI Field/Group
Air Pollution	Calcium	Air Pollution Control	13B
Coal	Regeneration (Engineering)	Stationary Sources	21D
Combustion		Sulfur Recovery	21B
Electric Power Plants	Sulfur	Reductive Decomposition	10B
Fluidized Bed Processing			07A
Sulfur Dioxide	Limestone		07B 08G
Sorbents	Dolomite		11G

18. DISTRIBUTION STATEMENT Unlimited	19. SECURITY CLASS *(This Report)* Unclassified	21. NO. OF PAGES 145
	20. SECURITY CLASS *(This page)* Unclassified	22. PRICE

EPA Form 2220-1 (9-73)