DOC

United States
Department of
Commerce

Office of Environmental
Affairs
Washington, D.C. 20230

EPA

United States
Environmental Protection
Agency

Office of Research and Development
Office of Energy, Minerals and Industry
Washington, D.C. 20460

EPA-600/7-77-101

August 1977

ENERGY CONSUMPTION OF ENVIRONMENTAL CONTROLS: Fossil Fuel, Steam Electric Generating Industry

Interagency
Energy-Environment
Research and Development
Program Report

EPA-600/7-77-101
August 1977

ENERGY CONSUMPTION OF ENVIRONMENTAL CONTROLS: FOSSIL FUEL, STEAM ELECTRIC GENERATING INDUSTRY

by

Brian Murphy, Project Manager
James R. Mahoney, Project Consultant
David Bearg
Gale Hoffnayle
Joel Watson
Environmental Research & Technology, Inc.
Concord, Massachusetts 01742

EPA Interagency Agreement No. IAG D6-E091

Office of Energy, Minerals, and Industry
Office of Research and Development
U.S. Environmental Protection Agency
Washington, D.C. 20460

DISCLAIMER

This report has been reviewed by the Office of Research and Development, U.S. Environmental Protection Agency, and approved for publication. Approval does not signify that the contents necessarily reflect the views and policies of the U.S. Environmental Protection Agency, nor does mention of trade names or commercial products constitute endorsement or recommendation for use.

FOREWORD

This report was sponsored to provide the interested public, government, labor, and business officials with an objective statement of the potential influence various governmental environmental regulations have on the availability of electrical energy. It examines ways in which environmental necessities can be obtained at lower energy costs. Careful economic evaluations must yet be done to place the energy-saving technological options within desirable economic and environmental contexts. Therefore, this study will be part of a continuing effort to find more efficient solutions to many of the more pressing problems of today.

Sidney R. Galler
Deputy Assistant Secretary
for Environmental Affairs

ABSTRACT

This report addresses the energy requirements for environmental control in the fossil fuel, steam electric industry. These requirements arise through a number of mechanisms, including:

- direct fuel or electricity requirements for operating pollution control equipment, including production of necessary chemicals and disposal of wastes
- energy used in constructing control equipment
- fuels consumed in transporting low sulfur fuels
- extra fuel consumed to compensate for power plants' efficiency losses caused by environmental controls
- energy used in constructing extra generation capacity to compensate for efficiency losses

These requirements are computed for a variety of energy policy "scenarios" to demonstrate the impact of altering current environmental regulations or of utilizing alternate strategies for achieving environmental goals. In particular, the effect of requiring "Best Available Control Technologies" for power plants, of using tall stacks and/or supplementary control systems, and of using coal washing and/or blending to decrease the necessity for "scrubbers" are examined in different scenarios.

This report was submitted by the Office of Environmental Affairs of the U.S. Department of Commerce in fulfillment of Interagency Agreement No. IAG D6-E091 with the U.S. Environmental Protection Agency. The research was conducted by Environmental Research and Technology, Inc. under the joint sponsorship of the Department of Commerce and Environmental Protection Agency.

CONTENTS

FOREWORD iv

ABSTRACT v

LIST OF ILLUSTRATIONS ix

LIST OF TABLES x

ACKNOWLEDGEMENTS xiii

1. SUMMARY AND CONCLUSIONS 1-1

1.1 Principal Findings 1-2

1.2 Relative Importance of Various Regulatory Areas 1-4

1.3 Control System Options 1-6

2. INTRODUCTION 2-1

2.1 Objectives and Guidelines 2-1

2.2 Scenarios Considered 2-4

3. ENERGY CONSUMPTION BY ENVIRONMENTAL CONTROL PROCESS 3-1

3.1 Pre-plant Energy Requirements 3-5

3.2 In-plant Energy Requirements 3-20

3.3 Post-plant Energy Requirements 3-42

3.4 Capital Energy Requirements 3-44

3.5 Capacity Losses 3-49

4. BASE YEAR ENVIRONMENTAL ENERGY CONSUMPTION 4-1

4.1 Sulfur Dioxide Control 4-1

4.2 Thermal Pollution Control 4-9

4.3 Particulate Control 4-10

4.4 Other Environmental Control Areas 4-12

CONTENTS (CONTINUED)

5. METHODOLOGY 5-1

5.1 Data Sources 5-1

5.2 Expansion to the National Population 5-3

5.3 Regulatory Scenarios for Sulfur Oxides 5-15

5.4 Oil to Coal Conversion 5-18

5.5 Complying Fuel Histograms 5-18

5.6 Sulfur Oxide Control Technologies 5-25

6. 1983 PROJECTIONS 6-1

6.1 Sulfur Dioxide Controls 6-3

6.2 Waste Heat Disposal 6-14

6.3 Particulate Controls 6-23

7. DISCUSSION OF RESULTS 7-1

7.1 Comparison with Other Studies 7-1

7.2 Comparison with EPA Expected Regulatory Activity 7-3

7.3 Low Sulfur Western Coal Availability 7-5

REFERENCES

APPENDIX A - ERT SAMPLE PLANT POPULATION

APPENDIX B - ENERGY CONSUMPTION MODELING

APPENDIX C - ENVIRONMENTAL ENERGY CONSUMPTION ALGEBRA

LIST OF ILLUSTRATIONS

Figure		Page
1-1	Energy Requirements to meet Sulfur Dioxide Regulations in 1983	1-7
3-1	Material and Energy Balances for a FGD System Utilizing Limestone as Sorbent	3-10
3-2	Coal Regions of the United States	3-13
3-3	Material and Energy Balances for a FGD System Utilizing Lime as Sorbent	3-21
3-4	Flow Sheet - Coal-Fired Central Treatment Plant	3-24
3-5	Energy Utilization Efficiency - Central Station vs. Total Energy	3-40
3-6	Material and Energy Balances for a FGD System Utilizing Limestone as Sorbent and Lime as Fixating Agent for the Treatment of Sludge	3-45
3-7	Material and Energy Balances for a FGD System Utilizing Lime as Both Sorbent for Sulfur Removal and Fixating Agent for Treatment of Sludge	3-46
5-1	Locations of the 100 Power Plants in the Study	5-10
5-2	Complying Fuel Histograms	5-23
5-3	Oil and Coal Contributions to the 1983 Complying Fuel Histogram of Figure 5-2	5-24
7-1	Comparison of Scenario Coal Requirements and Projected Coal Availability in 1983	7-10

LIST OF TABLES

Table No.		Page
1-1	Percent of Total Energy Use for SO_2 Waste Heat and Particulate Control	1-3
1-2	Goals of Sulfur Dioxide Regulations and Example of Energy Requirements to Meet Them in 1983	1-5
1-3	Sulfur Dioxide Control Energy Consumption to Comply with Air Quality Standards in 1983	1-10
2-1	Regulatory Parameters	2-5
2-2	Sulfur Oxide Control Technology Scenarios	2-7
2-3	Waste Heat Disposal Scenarios	2-8
3-1	Energy Consumption on a Process Basis	3-2
3-2	Process Energy Consumption in Percent	3-6
3-3	Breakdown of Unit Process Energy Requirements in Percent	3-7
3-4	Energy Requirements for the Extraction of Coal	3-9
3-5	Energy Requirements for the Transport of Coal	3-12
3-6	Heat Content Estimates for Western and Other Coals	3-12
3-7	Estimates of Btu Content Loss Due to Physical Coal Cleaning	3-17
3-8	Energy Requirements for Nonregenerable FGD Systems	3-23
3-9	Summary of Energy Requirements for Lime and Limestone FGD Systems	3-24
3-10	Energy Requirements for Regenerable FGD Systems	3-26
3-11	Energy Requirements for Particulate Control Equipment	3-28
3-12	Energy Requirements for Closed-Cycle Cooling Systems	3-32
3-13	Thermal Cycle Efficiency of Fluidized-Bed Boilers	3-38
3-14	Capital Energy Requirements for Environmental Control	3-48
3-15	Capacity Loss or Saleable Power Reductions in Percent	3-50
4-1	Summary of Base Year Environmental Energy Consumption	4-2
4-2	Environmental Energy Consumption for Residual Oil Desulfurization in 1974	4-5
4-3	Shipments of Western Coal to Eastern Markets, 1974	4-7
4-4	Distribution of Particulate Control Equipment by Fuel Type for the Sample Plant Population	4-11

LIST OF TABLES (Continued)

Table No.		Page
5-1	Details for 100 Plant Sample Power Plant Parameters; Coal Plants, East Coast	5-4
5-2	Distribution of Total Coal- and Oil-Fired Generating Capacity by Region, Size and Fuel Type - Pre-1976 Capacity	5-11
5-3	Distribution of Total Coal- and Oil-Fired Generating Capacity by Region, Size and Fuel Type - Capacity Added 1976-1980	5-12
5-4	Megawatt Values Used in Deriving Expansion Factors	5-13
5-5	Sulfur Oxide Regulatory Scenarios	5-17
5-6	Ratio of Coal to Oil Heating Values	5-19
5-7	Complying Fuel Sulfur Values	5-20
5-8	Breakdown of Megawatts in the 100 Plant Sample by Complying Fuel Range for Air Quality Standards with Minimum Coal Conversion	5-22
5-9	Sulfur Oxide Control Technology Scenarios	5-26
5-10	Energy Consumption Matrix: Scenario 1.S	5-27
5-11	Distribution of Utility Coal Consumption and Generating Capacity by Region	5-29
5-12	Energy Consumption Matrix: Scenario 2.S	5-31
5-13	Energy Consumption Matrix: Scenario 3.S	5-33
5-14	Percentage of Energy Generation by Sulfur Fuel Ranges Redistribution with Use of 95% Reliable Supplementary Control Systems	5-33
5-15	Percentage of Fuel Range Switches for Supplementary Control System Options	5-35
6-1	Range of Total SO_2 Waste Heat and Particulate Control Energy Requirements	6-2
6-2	Range of Sulfur Control Energy Requirements to Meet all Present Regulations	6-5
6-3	Most Likely Sulfur Control Energy Requirements to Meet Various Regulations in 1983	6-5
6-4	Most Likely Capacity Loss Resulting from Sulfur Control to Meet Various Regulations in 1983	6-6
6-5	Range of Capacity Loss to Meet All Present Regulations	6-6
6-6	Sulfur Oxide Control Energy Requirements Coal Conversion Comparison	6-8
6-7	Sulfur Oxide Control Energy Requirements Growth Rate Comparison	6-9

LIST OF TABLES (Continued)

Table No.		Page
6-8	Sulfur Oxide Control Energy Requirements by Energy Source to Meet All Present Regulations	6-10
6-9	Sulfur Oxide Control Energy Requirements by Location in the Process Stream to Meet All Present Regulations	6-10
6-10A	Range of Sulfur Oxide Control Energy Requirements to Meet Air Quality Standards Only: Scenario 1.S	6-12
6-10B	Range of Sulfur Oxide Control Energy Requirements to Meet Air Quality Standards Only: Scenario 2.S	6-12
6-10C	Range of Sulfur Oxide Control Energy Requirements to Meet Air Quality Standards Only: Scenario 3.S	6-12
6-11A	Results for Best Available Control Technology Based on Scenario 1.S for Pre-1980 Plants	6-13
6-11B	Results for Best Available Control Technology Based on Scenario 2.S for Pre-1980 Plants	6-13
6-11C	Results for Best Available Control Technology Based on Scenario 3.S for Pre-1980 Plants	6-13
6-12	Summary of Waste Heat Control Scenarios	6-16
6-13	Environmental Energy Consumption Percentage for Waste Heat Control Scenarios	6-17
6-14	Calculations for Percent of 1983 Fossil Fuel Generating Capacity Which Will Employ Closed-Cycle Cooling for Environmental Reasons Under the Assumptions of Scenario 1.W	6-19
6-15	Environmental Energy Consumption for Particulate Control in 1983	6-23
7-1	Comparison of Estimates of Energy Consumption for Pollution Control	7-2
7-2	Expected Environmental Energy Consumption Using the EPA Mix of Control Systems	7-4
7-3	Implied Low Sulfur Western Coal Consumption for Three SO_2 Regulatory Scenarios - 1983	7-6

ACKNOWLEDGMENTS

This study was financed by the U. S. Department of Commerce and the U. S. Environmental Protection Agency. Project supervisors were Robert B. Grant and Richard J. Herbst of the Office of Environmental Affairs, U. S. Department of Commerce. During the conduct of this study, valuable advice, assistance, and data were received from the Environmental Protection Agency, the Tennessee Valley Authority, the Federal Power Commission, the Office of Energy Programs of the Department of Commerce, the Edison Electric Institute, the Electric Power Research Institute, and many electric utility companies.

1. SUMMARY AND CONCLUSIONS

This study addresses the energy requirements for environmental control in the fossil fuel, steam electric industry. These requirements are given throughout the report as percentages of the total fuel energy input at all fossil fuel, steam electric plants to produce electricity. Present fossil fuel energy used in the steam electric industry for the base year 1974 is estimated in Section 4 as 15×10^{15} Btu's. Two industry growth rates, 4.16 percent and 6.73 percent have been used in the study as explained in Section 6. This amounts to an energy use in 1983 of $22 - 27 \times 10^{15}$ Btu's.

Interpretation of the numbers presented in this section and in the remainder of the report will be aided if the following equivalent values are kept in mind. A one percent increment in energy required for environmental control in 1983 is equivalent to:

- $220 - 270 \times 10^{12}$ Btu's
- 40-50 million barrels per year of crude oil
- 500-650 million 1976 dollars (at an approximate import price of $13/barrel)

Of course, not all of the energy consumed for environmental control in 1983 is in the form of imported oil. For coal a one percent energy increment would be equivalent to:

- $220-270 \times 10^{12}$ Btu's
- 9-12 million tons of coal
- 250-340 million 1976 dollars (at an approximate costs of $28 per ton).

These equivalent values do illustrate that on a national scale an energy increment of one percent or even less is significant when viewed in dollar terms.

1.1 Principal Findings

The main conclusions of this study are listed in Table 1-1. The following two sections discuss these results further from two standpoints: (a) the relative importance of various regulatory areas, (b) control system options which lead to significant energy savings.

PRINCIPAL FINDINGS

- Present energy consumption for environmental control of fossil fuel-steam electric plants in the base year of 1974 is approximately 1.3 percent of the total national fuel energy input to these plants.
- By 1983, the energy consumption for environmental controls could be as large as 8.2 percent of the total fuel energy input to all plants (see Table 1-1) or as small as 4.1 percent.
- Control of sulfur dioxide emissions makes the greatest energy demand (see Table 1-1 for an illustration).
  - If best available control technology, including low sulfur fuel use and scrubbers, is required at new plants, the total energy demand can be as large as 7.3 percent.
  - Energy demand for compliance with all present regulations (without the additional requirement of best available control technology) would be approximately 2.5 to 7.2 percent. Use of coal washing to replace scrubbers where possible results in the highest consumption while significant use of coal blending results in the least consumption.
  - The energy savings resulting from the use of tall stacks and/or supplementary control systems nationwide to meet ambient air quality SO_2 standards would be approximately 1 percent.
- A considerable amount of energy (on the order of 2.1 percent of the national population's energy input) will be consumed as the broad range of fuels labeled oil/gas in order to meet present regulations, primarily in the form of transportation fuels for the shipment of low sulfur western coal (LSWC).

TABLE 1-1

PERCENT OF TOTAL ENERGY USE FOR SO_2, WASTE HEAT AND PARTICULATE CONTROL

	Smallest Total Anticipated Consumption	Largest Total Anticipated Consumption
SO_2 - All present regulations	2.5	7.2
Addition of BACT*	1.2	0.1
	3.7	7.3
Waste Heat	0.2	0.7
Particulate	0.2	0.2
Total	4.1	8.2

*Best Available Control Technology: Defined in the study as half of all oil desulfurized, half of all coal washed, and scrubbers on all plants built after 1979.

- Coal blending is a considerably less energy intensive means of SO_2 control than coal washing (-2 percent).
- Disposal of cooling water waste heat has the second greatest energy demand: From 0.2 to 0.7 percent.
- Particulate controls have the third greatest energy demand: Approximately 0.2 percent.
- Conversion of post-1974 plants from oil to coal can result in an additional energy requirement of from 0.1 to 0.3 percent of the total national energy input to fossil-steam plants by 1983 due to the additional control systems which would be required.
- The industry growth rate does not significantly affect the results presented. The tables present the case of coal conversion for new plants only and an industry growth rate of 6.73 percent.
- If all (old and new) oil fired plants are converted to coal, an additional energy requirement of from 0.9 to 1.2 percent could occur due to the additional control systems that would be required.
- The average capacity loss at individual power plants because of environmental controls ranges from 1.5 to 5.1 percent of rated capacity.
- The main focus of this study was the energy consumption needed for environmental control systems. The selection of those systems depends strongly, however, on the availability of low sulfur western coal. The options cover a range from the presently available coal to more than the upper end of all projections. It is clear that the availability of coal as it affects energy consumption needs closer investigation.

1.2 Relative Importance of Various Regulatory Areas

Sulfur dioxide regulations are identified as the most energy intensive area when compliance is based on scrubbers and low sulfur fuel only. Table 1-2 illustrates the way in which different sulfur dioxide regulations contribute incrementally to energy consumption. These energy percent figures are based on scenario 3.S for the smallest anticipated consumption and on scenario 2.S for the largest estimate.

TABLE 1-2

PERCENT OF TOTAL ENERGY USE FOR THE GOALS OF SULFUR DIOXIDE REGULATIONS PROJECTED TO 1983

Regulation	Goal	Smallest Anticipated Consumption	Running Total	Largest Anticipated Consumption	Running Total
Primary air quality standards	Protect human health	0.91	0.91	4.52	4.52
Primary and secondary air quality standards	Protect health and welfare (ecological and economic effects)	0.24	1.15	0.75	5.27
State Implementation plans	Maintain air quality standards	0.75	1.90	1.78	7.05
New source performance standards	Use best available control technology for each class of source taking cost into account	0.37	2.27	-0.57	6.48
Non-deterioration (Class II)	Maintain present air quality	0.24	2.51	0.71	7.19
Best available* control technology	Minimum possible emissions determined on a source-by-source basis	1.20	3.71	0.10	7.29

*Defined in this study for plants built after 1979 as half of all oil desulfurized, half of coal washed and scrubbers on all plants. Older plants comply with AQS and SIPS.

Figure 1-1 shows graphically the results presented in Table 1-2. Note the negative increment for the New Source Performance Standards (NSPS) shown for the largest anticipate consumption case. This occurs for the coal washing scenario (2.S) because more restrictive sulfur dioxide emission limits require less energy input due to switches from high energy but low emission reduction coal washing to lower energy but higher emission reduction alternatives (such as scrubbers).

Maintaining present air quality in non-deterioration Class II (ND) regions involves an energy increment of 0.24-0.71 percent beyond NSPS, AQS, and SIPS (see Table 1-2).

Best Available Control Technology (BACT) is intended to represent a possible maximum emission control situation determined on a source-by-source basis. The application of BACT has a different effect on each scenario. In scenario 3.S which has the smallest energy consumption, the application of BACT forces conversion to scrubbers and a consequent increase in energy consumption. In scenario 2.S however application of BACT converts plants from coal washing to scrubbers with little resultant change in energy requirements.

For the second most energy intensive area, disposal of cooling water waste heat, we find that most of the energy consumption projected for 1983 occurs at existing units covered by state rather than federal regulations. Thus, the principal regulatory option rests with the states which could allow a greater percentage of facilities, exempt from federal requirements, to use open-cycle cooling. A 25 percent increase in the number of these facilities permitted to retain open-cycle cooling leads to a 0.2 percent decrease in energy requirements.

For the third most energy intensive area, particulate control, we have not been able to identify credible regulatory options leading to substantial energy savings.

1.3 Control System Options

There are low-energy options for attaining environmental goals which should be considered in development of compatible environmental and energy plans.

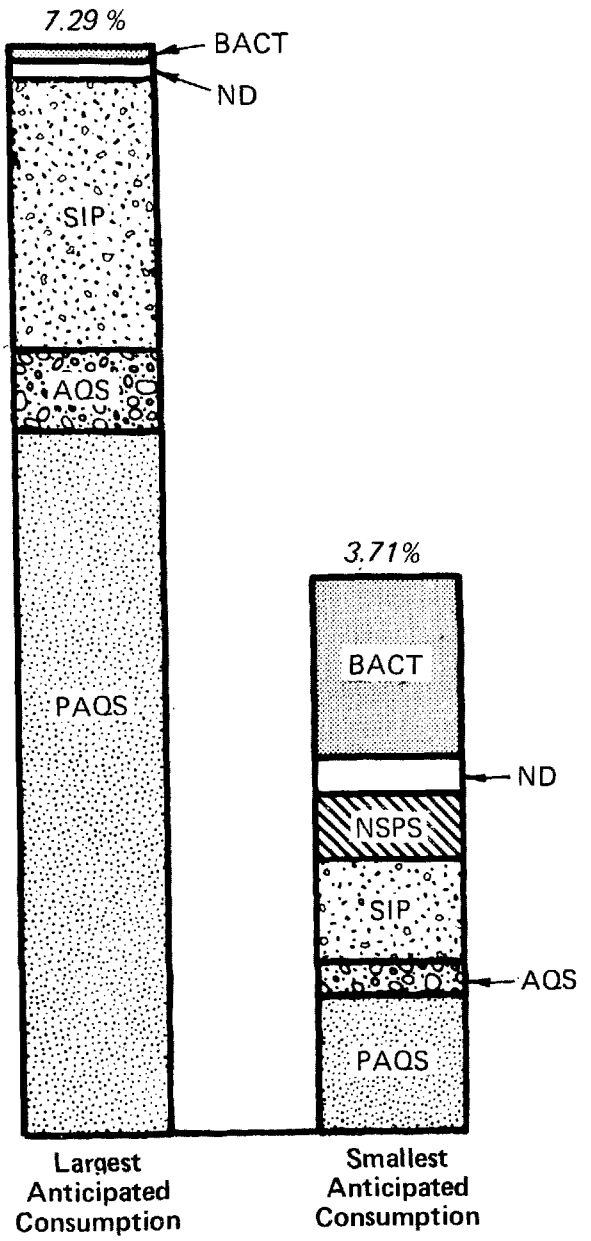

Figure 1-1 Energy Requirements to Meet Sulfur Dioxide Regulations Regulations in 1983

For waste heat disposal energy, conservation in environmental control systems can arise through: (a) waste heat utilization in total energy plants, aquaculture, etc., (b) less energy intensive closed cycle cooling systems such as cooling ponds or canals. It has not been possible in the present study to provide quantitative information in these areas. For particulate control using energy consumption results of the survey, while there is a slight increase in energy consumption with coal conversion due to a trend away from mechanical collectors (multiple cyclones) and toward electrostatic precipitators, no control options have been identified as leading to significant energy savings.

The principal energy conserving options are in the area of sulfur oxide control through fuel blending and also through the use of Tall Stacks or Supplementary Control Systems which permit switching between high and low sulfur fuels depending on pollutant dispersal characteristics of the atmosphere. If these options are used to meet Primary and Secondary Air Quality Standards, we find that:

- Widespread use of fuel blending rather than scrubbers to meet air quality standards decreases energy requirements by 0.4 to 0.9 percent. Widespread use of fuel blending instead of coal washing decreases energy use by 1.1 to 2.3 percent.
- Widespread use of supplementary control systems rather than scrubbers to meet air quality standards decreases energy requirements by 0.5 to 1.1 percent of the full value to produce electricity.
- Use of supplementary control systems only in regions of the country designated "low-sulfate" produces approximately a 0.4 percent decrease in energy requirements.
- Widespread use of tall stacks at new plants rather than scrubbers to meet air quality standards decreases energy requirements by 0.7-1.2 percent.
- Use of tall stacks at new plants only in regions of the country designated "low-sulfate" produces only about a 0.2 percent decrease in energy requirements.

TABLE 1-3

SULFUR DIOXIDE CONTROL ENERGY CONSUMPTION TO COMPLY WITH AIR QUALITY STANDARDS IN 1983 (IN PERCENT OF FUEL INPUT TO FOSSIL STEAM PLANTS)†

	Scenario*		
	1.S	2.S	3.S
Expected Energy Consumption	2.2	3.8	1.6
Option			
Supplementary Control Systems Everywhere	1.6	2.7	1.1
Supplementary Control Systems in "Low-Sulfate" Regions	1.9	3.4	1.2
Tall Stacks Everywhere	1.5	2.6	0.9
Tall Stacks in "Low-Sulfate" Regions	2.0	3.6	1.3

*Sulfur dioxide control system scenarios:

1.S - Low sulfur coal and scrubbers

2.S - Addition of coal washing

3.S - Addition of coal blending

†Based on "most likely" values of process energy consumption in Table 3.2.

It should be noted that there are concerns beyond the present regulations which influence the use of tall stacks and SCS. In particular the role of total atmospheric burden of SO_2 in producing sulfates awaits clarification.

Detailed results for three SO_2 control system scenarios are shown in Table 1-3.

2. INTRODUCTION

Recent disruptions in traditional energy supply and price patterns, together with an increasing awareness of the finite size of energy resources, have created a need for a better understanding of the United States' energy system.

This study is an examination of one component of this energy system, namely the energy required to control pollution in the fossil fuel, steam electric generating industry.

The fossil fuel, steam electric generating industry is unique in a number of respects. It is the leading industry in terms of direct fuel energy consumption and has major environmental impacts. Since its basic product is energy, it is tightly coupled to other industries as part of the overall energy system. For example, increased electrification in some industries, as a result of the pressures of complying with environmental regulations, may well increase emissions from the generating plant which supplies electricity for those industries. The result could be a net increase in overall emissions to the environment. Therefore, although this study quantifies the relationship between environmental controls and the related energy consumption in the fossil fuel, steam electric generating industry, the environmental controls on the generating and consuming industries are interrelated.

2.1 Objectives and Guidelines

The general objective of this study was to identify, quantify and rank significant energy consumption required by pollution control regulations in the fossil fuel, steam electric generating industry. Specific objectives are as follows:

- to estimate present consumption of energy for environmental control in the fossil fuel, steam electric industry.
- to project energy consumption for environmental controls to 1983.
- to separate the total energy consumption for environmental controls into two categories:

- fuel used - coal or oil and whether as raw fuel or as electricity.
- position in generation process - before arrival of fuel or other materials at the plant (pre-plant), within the generation complex (in-plant), or after generation is complete (post-plant).

- to quantify the capacity losses expected with various environmental control options.
- to identify regulatory and control system options which would produce energy savings.

Study Requirements and Guidelines

This study required the methodology to handle a complex set of input data and output results; the ways in which these requirements have been met are summarized below:

- High Level of Detail in the Input Data

  The study utilizes plant engineering and modeling data for 100 fossil fuel, steam electric plants. These data have had to be expanded to give results for the national population of plants in 1983.

- High Level of Detail in the Output Results

  Energy requirements for environmental control need to be calculated for a complex mix of specific air and water quality regulations.

- Flexibility of Analysis Methods

  Results are given for a variety of scenario parameters such as industry growth rates, degrees of coal conversion, and types of control technology. This has been accomplished by embodying most of the methodology in a modular computer program termed RIPPER (Regulatory Impact on Power Plant Energy Requirements) which permits a multitude of parameter variations to be investigated.

- In computing energy consumed for environmental control, the degree of control technology required is based on the assumption of full compliance with a set of regulations for the particular scenario being considered.
- Only energy consumption required to comply with environmental regulations is inventoried. For example, energy used for closed-cycle cooling, where this is necessitated by water unavailability, is not counted.
- Similarly, the study does not count the additional energy used to produce a saleable product in SO_2 scrubbing systems, that is, the difference in energy consumption of regenerable and non-regenerable systems. In principle, we should count the total regenerable system energy consumption where this is necessitated by lack of a suitable sludge disposal area. However, we have in effect assumed regenerable systems mandated solely by environmental causes to be rare.

2.2 Scenarios Considered

A variety of parameters enters into each of the scenarios for which projections have been made. What this study terms "external parameters" are shown below. They must be supplied as part of the input to calculations and while they may be important to the results are not specifically of interest as study variables. The term "external" is used somewhat loosely since the degree of coal conversion could as easily be included in the list of regulatory parameters shown in Table 2-1. It is however convenient to describe regulatory parameters according to the pollutant being controlled.

Table 2-1 lists the regulatory parameters characterizing the areas of sulfur oxide and waste heat control. These parameters are based on presently enforceable regulations and on what appear to be the most likely alternatives that may arise. Calculations have also been performed for particulate control energy requirements as described in Section 6.3. However, particulate control energy requirements have been found to be determined primarily by fuel type. Hence, regulatory parameters for particulate control have been held constant.

The methods of conducting this study are described in detail in Section 5; the guidelines for developing these methods are listed below. In general, the study was conducted in energy units (Btu's) and did not consider dollar costs. The results are reported in incremental precentages of total energy use, due to the implementation of the regulations studied. The use of percentages facilitates comparisons and alleviates the need for carrying large numbers throughout the study. These factors are designed to improve the value of the study as a policy-analysis tool. These percentage, energy-consumption figures can be interpreted as either the incremental amount of fuel which would be consumed because of specific environmental regulations or as the incremental amount of electricity which would be produced for the same amount of fuel in the absence of these environmental regulations (see Appendix C).

The major line of analysis of the study inventories energy which would actually be consumed without respect to derating or capacity losses. A separate analysis of capacity losses associated with this energy consumption has been made and is also reported.

After an initial attempt to quantify all regulatory effects, it was determined that only regulations for the control of sulfur dioxide, particulate matter, and thermal pollution entail significant consumption of energy. The study was focused to provide more detail in these three areas. Sulfur regulations appeared to be the most significant of the three areas so an additional effort was made in the area of sulfur oxide control.

Detailed Guidelines for Study

- The study is concerned with the fossil fuel, steam electric portion of the electrical generating industry. Other components of this industry, such as nuclear, gas turbine, or internal combustion, are considered only as they affect industry growth rate assumptions.
- Only environmental control technologies capable of having a major impact on results by 1983 are treated. Advanced technologies such as fluidized bed combustion, coal gasification or liquification, or scrubbers for NO_x removal, although discussed in Section 3, do not enter into the energy consumption projections.

TABLE 2-1

REGULATORY PARAMETERS

Sulfur Oxide Control

- 24-hour primary National Ambient Air Quality Standard (PAQS)
- 24-hour primary National Ambient Air Quality Standard and 3-hour secondary National Ambient Air Quality Standard (AQS)
- State Implementation Plans (SIP)
- New Source Performance Standards (NSPS)
- Non-Deterioration Class II permitted increments (ND)
- Best Available Control Technology (BACT)

Waste Heat Control

- Degree to which variances for open-cycle cooling are granted (Section 316(a) of the Water Quality Control Act)
- Fraction of generating plants affected by state water quality regulations

The scenarios for sulfur oxide control options are listed in Table 2-2 and for waste heat disposal in Table 2-3.

External Parameters

- Growth rates for fossil fuel, steam electricity generation.
- Degree of coal conversion.
- Regional availability of low sulfur western coal.
- Fraction of plants requiring closed cycle cooling for non-environmental reasons.
- Mix of permitted control technologies.

TABLE 2-2

SULFUR OXIDE CONTROL TECHNOLOGY SCENARIOS

1.S Scrubbers and Low Sulfur Fuel

Compliance through the use of low sulfur western coal and scrubbers at coal fired plants. Compliance through oil desulfurization at oil fired plants.

2.S Addition of Coal Washing

Same as scenario 1.S but coal washing is used wherever it can replace scrubbers.

3.S Addition of Blending

Same as scenario 1.S but blending of low sulfur western coal is used wherever it can replace scrubbers.

Options (can be combined with any of the above scenarios.)

SCS(E) Supplementary Control Systems permitted everywhere at both old and new plants.

SCS(ROC) Supplementary Control Systems permitted in the rest of the country outside of so called "high sulfate states".

TS(E) Tall stacks permitted everywhere for new plants.

TS(ROC) Tall stacks permitted at new plants only outside of so called "high sulfate states".

TABLE 2-3

WASTE HEAT DISPOSAL SCENARIOS

1.W EPA assumptions as in the report "Economic Analysis of Effluent Guidelines Steam Electric Power Plants" (TBS, 1976)

2.W Same as scenario 1.W but assumes a higher percentage (80 vs. 65) of 1974 baseyear capacity installed closed-cycle cooling is installed for water supply reasons.

3.W Same as scenario 1.W except that a lower percentage (75 vs. 89) of the 1974 baseyear would be allowed by the states to retain open-cycle cooling.

4.W Same as scenario 1.W except that a lower percentage (50 vs. 88) of the capacity added in 1975-1978 would be assumed to receive a 316(a) variance.

5.W Same as scenario 1.W except that the percent of plants added in 1979-1983 installing closed cycle cooling for environmental reasons does not vary from the 1975-1978 percentage.

3. ENERGY CONSUMPTION BY ENVIRONMENTAL CONTROL PROCESS

This section surveys the environmental control energy requirements involved in the generation of electricity from fossil fuels. The energy requirements described are only those attributable to compliance with environmental regulations. Energy requirements necessary for the generation of electricity from fossil fuels, or related to good operating practice, are not included even if they have a secondary environmental effect.

For each environmental control process, the process is described; the energy consumption values found in the literature are described; and the values used for this study are recorded.

The three categories of energy requirements included in this section are pre-plant, in-plant and post-plant. Pre-plant is defined as all energy requirements prior to the fuel or other materials reaching the generation site including desulfurization, coal washing or blending and transportation. Post-plant are those after generation such as in sludge removal. The remainder are in-plant, including flue gas clean-up. Each environmental control process is discussed in the context of these categories (see Table 3-1). Capital energy requirements, included in the pre-plant category, are determined by the energy consumption for construction of control equipment.

Results of the survey described in this section indicate that energy requirements for environmental control can be put into the following order of decreasing impact:

1) Sulfur Dioxide Controls;

2) Waste Heat Disposal; and

3) Particulate Controls.

All other environmental controls investigated have a much reduced impact.

Therefore, the emphasis in this study is on sulfur dioxide controls, with a lesser degree of effort being expended on the study of waste heat controls and particulate controls.

TABLE 3-1

SUMMARY OF LITERATURE VALUES OF PERCENT OF TOTAL ENERGY CONSUMPTION ON A PROCESS BASIS

Area	Percent Energy Requirement	References
A. Pre-Plant		
1. Extraction		
Coal Extraction	Negligible	(CEQ, 73; CA, 75b; Energy, 75)
Oil/Gas Extraction	Negligible	-
Control Chemicals (Limestone Mining)	0.063	(Haller, 75)
2. Transport		
Coal (Western)	4.0	(Ford, 75; BOM, 75)
Control Chemicals (Limestone)	0.195	(Haller, 75)
3. Pretreatment		
Oil Desulfurization	3-6	(Ford, 75; HP, 74)
Coal Cleaning	4.0-10.0	(Lovell, 75; Deurbrouck, 74; EPA, 75a)
Coal Liquefaction and Gasification	15-40	(EPA, 75a, Energy, 75; CA, 75a; Perry, 74)
Lime Calcining and Preparation	1.98	(Minerals, 73; Haller, 75)
B. In-Plant		
1. Sulfur Dioxide Control		
Flue Gas Desulfurization	3-5.5	(Haller, 75; Ellis, 75; Ford, 75) (EPA, 73a; EPA, 75a)
2. Particulate Control		
Multiple Cyclones	∿0.0	Questionnaire Responses (Oglesby, 70; Stern, 68; Teller, 72)
Electrostatic Precipitators	0.1-0.3	(PEDCo, 75) and Questionnaire Responses
3. Nitrogen Oxides Control		
Combustion Modifications	0-0.6	(Oglesby, 70; Stern, 68; Teller, 72; Ford, 75)
4. Thermal Pollution Control		
Cooling Ponds	1.0	
Spray Ponds and Semi-Closed	1.3	(EPA, 73a; EPA, 74a; Ford, 75; Hirst, 73; Dynatech, 69)
Mechanical Draft Towers	1.0-4.0	
Natural Draft Towers	2.0-4.5	

TABLE 3-1 (Continued)

ENERGY CONSUMPTION ON A PROCESS BASIS

Area	Percent Energy Requirement	References
5. Wastewater Control		
Chemical Treatment	<0.04-0.2	(EPA, 75b) and Questionnaire Responses
6. Unit Conversions		
Substitution of Western Coal	0.5	See text
Coal Conversion	*	-
Supplemental Fuel, Solid Waste	0	(EPA, 74b; Energy, 75; Ford, 75)
Fluidized Bed Combustion	5	(EPA, 75a; ER, 75)
Improved Power Plant Efficiency	(+)	(CEQ, 73)
Total Energy Systems	(+)	(EPA, 75c)
7. Noise Control	0.1	(EPA, 73)
8. Intermittent Control Strategies		
Fuel Switching	small	See text
Load Shifting	small	See text
Tall Stacks	0	(EPA, 75a)
C. Post-Plant		
1. Coal Ash Disposal	0.0-1.1	Questionnaire Responses
2. Sludge Disposal	0.77-1.26	(BOM, 74a; EPA, 74b; Haller, 75) (EPA, 75b)
D. Capital Energy Requirements (Included in Pre-plant)		
1. Sulfur Oxide Control		
Transport of Western Coal	*	-
Trains or Pipelines		-
Limestone Scrubbing Systems	0.2-0.5	(Ford, 75)
Oil Desulfurization Facility	0.15	(Ford, 75)
2. Particulate Control		
Electrostatic Precipitator	0.2	(Ford, 75)

*A value was not determined but the process cannot be assumed unimportant.

(+)Energy conserved by these processes.

TABLE 3-1 (Continued)

ENERGY CONSUMPTION ON A PROCESS BASIS

Area	Percent Energy Requirement	References
3. Nitrogen Oxide Control		
Combustion Modifications	negligible	(Ford, 75)
4. Thermal Pollution Control		
Closed-Cycle Cooling System	negligible	(Ford, 75)
5. Coal Gasification or Liquefaction Plant	*	-
6. Coal Preparation Facility	*	-

*A value was not determined but the process cannot be assumed unimportant.

Table 3-1 lists all the areas investigated in the course of the study together with energy consumption values found in the literature. Each of the areas listed is discussed in this section. Table 3-2 lists the control system energy requirements actually used in the modeling of this study. Because of the ranges of reported energy consumptions reported in the literature and in the 100 plant survey (see Appendix A), this study has used a range of values. The values in this table are not explicitly referenced in the literature but represent a weighted judgment of the situation described in detail for each of the processes in the remainder of the stations. Included is a "most likely" value which represents a judgment of the central value of the range. Regions of the country referred to in Table 3-2 have been established based on sulfur content of coal available in that region (see Section 5.6).

Table 3-3 uses the "most likely" values as a basis to break down further the process energy consumption:

- by location in the process stream (pre-plant, in-plant, post-plant) Table 3-3a; and
- by form in which energy is consumed (oil/gas, coal, electricity) Table 3-3b.

The term oil/gas, as used in this report, refers to transportation related fuels as well as residual oil or natural gas. The remainder of this section discusses the energy requirements of each of the environmental controls using the format of Table 3-1.

3.1 Pre-plant Energy Requirements

Compliance with environmental regulations, or the application of environmental controls, at fossil fuel power plants can require the additional expenditure of energy for some aspect of extraction, transport, or treatment before fuel or control chemicals reach the power plant. This section describes the processes involved and estimates the energy requirements for pre-plant processes listed in Table 3-1.

TABLE 3-2

PROCESS ENERGY REQUIREMENTS IN PERCENT
OF TOTAL PLANT ENERGY CONSUMPTION

	Low	Most Likely	High
SO_2 Control			
Scrubber	3.0	4.0	7.0
Coal Washing	4.0	7.0	10.0
Low Sulfur Coal Transportation			
Region B*	3.0	4.0	5.0
Region C	4.0	5.0	6.0
Blending			
(Regions B and C)	0.5	1.0	2.0
Oil Desulfurization		3-6**	
Waste Heat Control			
Design	1.0	1.5	2.0
Retrofit	2.0	3.0	4.0
Particulate Control			
Electrostatic	0.2	0.3	0.4
Mechanical	∿0.0	∿0.0	∿0.0

*Regions defined in Figure 3-2.

**Oil desulfurization energy requirements depend on such factors as refinery type, feedstock, and product fuel mix.

TABLE 3-3a

BREAKDOWN OF UNIT PROCESS ENERGY REQUIREMENTS BY LOCATION IN SYSTEM IN PERCENT TOTAL PLANT ENERGY CONSUMPTION (BASED ON "MOST LIKELY" VALUES OF TABLE 3-2)

	Pre-plant	In-Plant	Post-Plant	Total
SO_2 Control				
Scrubber	0.5	3	0.5	4.0
Coal Wash	7	0	0	7.0
Low Sulfur Coal Transport				
to B	4	0	0	4.0
to C	5	0	0	5.0
Blending	1	0	0	1.0
Oil Desulfurization	3-6	0	0	3-6
Waste Heat Control				
Design	0	1.5	0	1.5
Retrofit	0	3.0	0	3.0
Particulate Control				
Electrostatic	0	0.3	0	0.3

TABLE 3-3b

BREAKDOWN OF UNIT PROCESS ENERGY REQUIREMENTS BY FUEL IN PERCENT TOTAL PLANT ENERGY CONSUMPTION (BASED ON "MOST LIKELY" VALUES OF TABLE 3-2)

	Oil/Gas	Coal	Electricity	Total
SO_2 Control				
Scrubber	0.5	0	3.5	4.0
Coal wash	0	7.0	0	7.0
Low Sulfur Coal Transport				
to B	4.0	0	0	4.0
to C	5.0	0	0	5.0
Blending	1.0	0	0	1.0
Oil Desulfurization	3-6	0	0	3-6
Waste Heat Control				
Design	0	0	1.5	1.5
Retrofit	0	0	3.0	3.0
Particulate Control				
Electrostatic	0	0	0.3	0.3

TABLE 3-4

ENERGY REQUIREMENTS FOR THE EXTRACTION OF COAL

Type of Coal Extraction	Energy Requirement* (percent)	Reference
Unspecified	0.8	[CEQ, 1973]
Surface Mine	0.73	[CA, 1975a]
Surface Mine	0.5	[Energy, 1975]
Surface Mine	1.4	[Energy, 1975]
Underground Mine	0.4-0.6	[Energy, 1975]

*Energy Requirement is expressed as a percent of the energy value of the coal being extracted.

Coal Extraction

All fossil fuels require some expenditure of energy to obtain them from their naturally occurring states irrespective of environmental considerations. These energy requirements vary not only by fuel type but by geographic location and extraction process. These energy requirements are considered outside the scope of this study, with one exception. The substitution of low sulfur (i.e., western low Btu) coal for high sulfur (high Btu) coal involves a larger energy requirement due to the lower heating value per pound extracted. To produce the same number of Btu's, more coal must be mined and thus more energy expended. This additional energy requirement, however, is negligible because the ancillary energy needed to extract the coal is only a small portion of the energy contained in the coal. Several values of estimates of the energy requirements for the extraction of coal are presented in Table 3-4.

Oil/Gas

We were not able to identify any significant energy consumption for extraction related to environmental control.

Control Chemical Extraction

The application of flue gas desulfurization (FGD) systems for the control of sulfur oxides requires the use of lime, limestone, or other control chemicals. Lime is obtained from the calcining of limestone, so the extraction of limestone for use in the FGD process is included as an energy requirement. The energy consumption for the mining of limestone has been estimated at 90,000 Btu per ton of output (Haller, 1975). This value reflects a national average value and there will be significant regional variation depending on the hardness of the limestone being extracted. The determination of energy requirement depends on the ratio of tons of limestone to coal for the operation of the FGD system. This ratio varies according to the efficiency of the chemical reaction as well as the quantity of sulfur dioxide being removed. Figure 3-1 displays the material and energy balances for a specific FGD system utilizing limestone as the sorbent. The energy requirement for limestone mining in this case represents 0.05% of the energy input to the boiler.

MATERIAL BALANCE: tons/hour

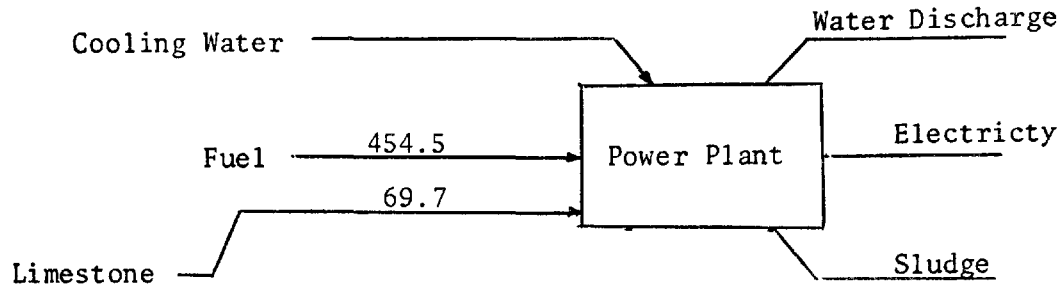

ENERGY BALANCE: Btu/hour

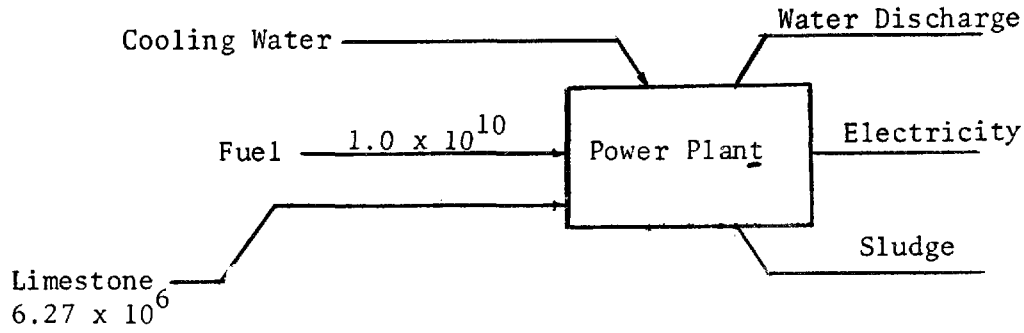

Basis: 1.0×10^{10} Btu/hour, energy input to boiler.

Assumptions:

3.5% sulfur coal, 11,000 Btu/lb.

85% sulfur removal by limestone scrubbing at 165% stoichiometry

Figure 3-1 Material and Energy Balances for FGD System Utilizing Limestone as Sorbent.

Transport

Coal

While the general transportation of fuels has no energy consumption for environmental purposes within the context of this study, the substitution of low sulfur western coal for higher sulfur eastern coal will require additional energy for fuel transport for two reasons. First, the western coal will need to be transported over a greater distance than the eastern coal would to reach the eastern markets. Secondly, the energy consumption for the transport of western coal, per ton-mile, is greater than that for eastern coal, when expressed as a percent of the energy value of the coal being transported, because western coal is typically of lower heat content. Coal can be transported by several modes including train, truck, barge, and slurry pipeline. The energy requirements for each of these modes is presented in Table 3-5. These energy requirements are for the consumption of diesel fuel except for slurry pipelines, which use electricity. Estimates of the heat content for western and other coals appear in Table 3-6. Assuming a value of 9,300 Btu/pound for western coal and 11,800 Btu/pound for eastern coal, this yields an additional hauling requirement of almost 27 percent more tons for the same Btu content of the fuel. For an energy requirement of 680 Btu/ton-mile transport of western coal, a distance of 1,000 miles consumes the equivalent of 4 percent of the coal-heating value.

In order to categorize more easily the transportation requirements for coal, the United States has been divided into three regions. These are shown on Figure 3-2. Region A is an area where low sulfur coal is available. Region B is an area with relatively little low sulfur coal and to which such coal must be transported for use by utilities. Since distances of about 1000 miles are involved, a "most likely" penalty of 4 percent will be used in calculations. Region C, west and east coasts, does not contain appreciable low sulfur coal available to utilities (low sulfur anthracite is used for metallurgy). Transport costs but not heat value reduction must be added for Region C and a "most likely" energy consumption of 5 percent is used.

TABLE 3-5

ENERGY REQUIREMENTS FOR THE TRANSPORT OF COAL

Mode Of Transport	Energy Requirement (Btu/ton-mile)	Reference
Train	680	[Ford, 1975]
Train	680	[Rice, 1970]
Train	690	[Energy, 1975]
Train	670	[Haller, 1975]
Truck	966	[Energy, 1975]
Truck	2,800	[Haller, 1975]
Truck	1,600	[DOT-EPA, 1975]
River Barge	378	[Energy, 1975]
Pipeline (Slurry)	≈400	[Energy, 1975]

TABLE 3-6

HEAT CONTENT ESTIMATES FOR WESTERN AND OTHER COALS

Coal Region	Heat Content (Btu/pound)	Reference
Northwest	8,780	[Hittman, 1974]
Southwest	9,820	[Hittman, 1974]
Western	9,235	[Battelle, 1973]
Eastern	12,000	[Battelle, 1973]
Central	10,600	[Hittman, 1974]
Northern Appalachia	11,800	[Hittman, 1974]
Central Appalachia	12,100	[Hittman, 1974]

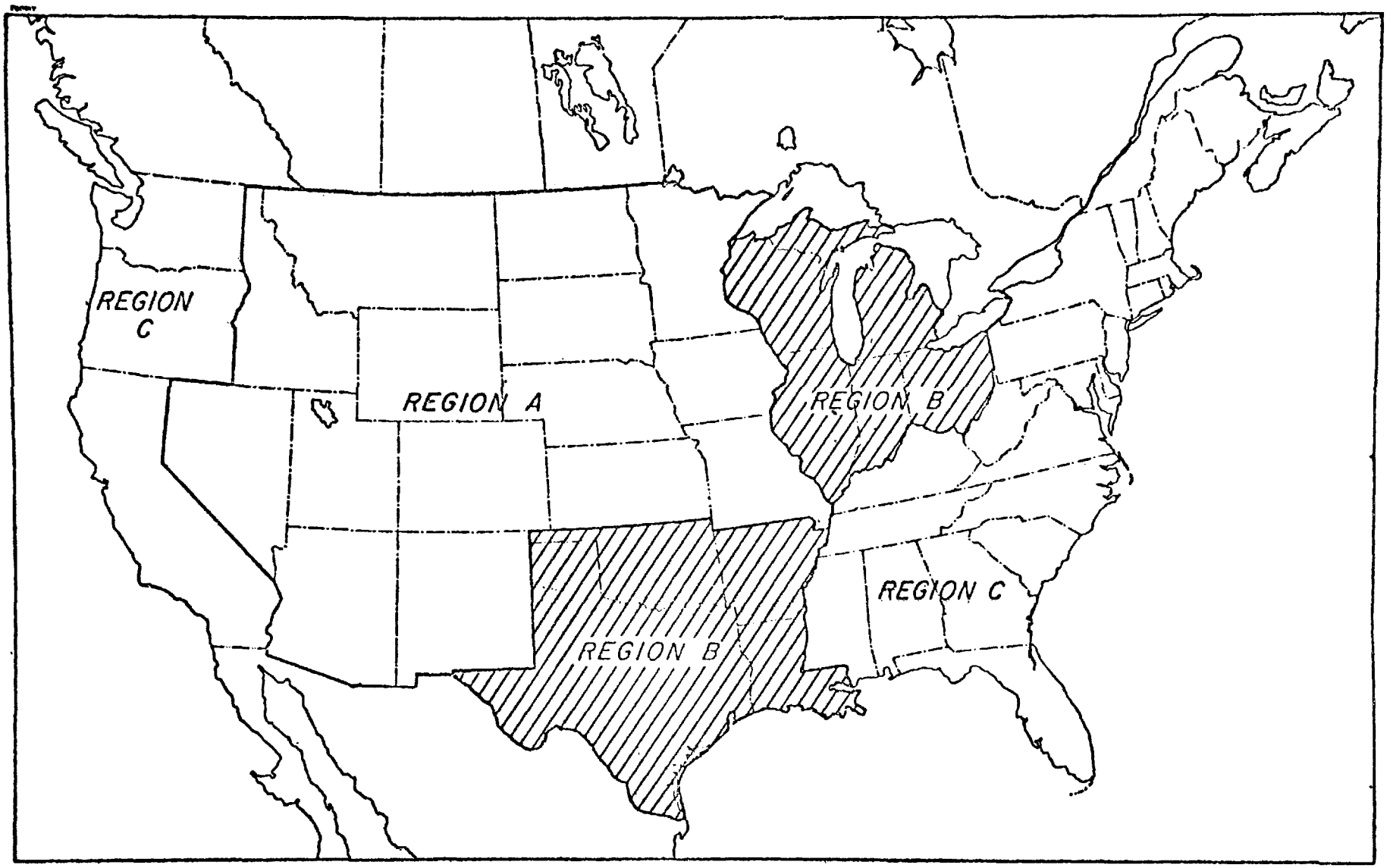

Figure 3-2 Coal Regions of the United States

Control Chemicals

Power plants using FGD systems for the control of sulfur dioxide have an energy requirement associated with the transport of the control chemical employed. The energy requirement is dependent on the quantity of chemical needed and the distance which it must be transported. For truck transport, assuming an average 1,800 Btu/ton-mile (see Table 3-5), over a distance of 200 miles, the hypothetical FGD system displayed in Figure 3-1 would need an energy of 0.18 percent of the energy input to the boiler. This energy requirement is in the form of diesel fuel, which is petroleum based.

Pretreatment

Residual Oil Desulfurization

The pretreatment of residual oil to reduce its sulfur content involves additional processing at the refinery. This sulfur reduction can be achieved by either the desulfurization of heavy fuel oils, the blending of untreated heavy fuel oils with other specific refinery products of low sulfur content, or a combination of the two. Only recently have domestic refineries begun to develop processes for the desulfurization of residual oils. This increase in heavy oil desulfurization is occurring in response to increased limitations of sulfur content being placed on refinery products, and increased dependence on high sulfur foreign crude.

The hydrodesulfurization of residual oils is based on the reaction of hydrogen with sulfur-containing compounds to form H_2S and a desulfurized product. In order for the hydrogen to achieve effective mass transfer with the residual stock, this reaction requires high pressure and temperature in the presence of a catalyst. The resulting hydrogen sulfide gas, which is mixed with hydrocarbon gases, is circulated through a packed column in which an amine solvent absorbs the hydrogen sulfide and permits the recovery of the hydrocarbon gases. The amine solvent is then regenerated in a distillation column and the hydrogen sulfide removed. The hydrogen sulfide can then be processed in a Claus plant to produce elemental sulfur.

Energy is consumed in this process for the generation of hydrogen, the heating and pressurizing of hydrogen and residuum, the regeneration of the amine solution and the additional heat needed by the Claus plant. The Claus process consists of the oxidation of one-third of the H_2S to SO_2 and then catalytically combining the remaining H_2S with the SO_2 to form water and free sulfur. Although the oxidation of H_2S is exothermic, it is necessary to supply additional heat to both reactions.

The energy requirement associated with fuel oil desulfurization has been reported to be roughly from 3.5 to 5.8% depending upon the type of feed and extent of desulfurization (Ford, 1975). This estimate includes the complete processing of the H_2S so that sulfur from the oil leaves the process in a pure, elemental form. An estimate of the energy requirement associated with the desulfurization of 4.02% sulfur Kuwait atmospheric residual to 1.0% sulfur is reported to be 2.07% (HP, 1974). This estimate, however, does not include the energy consumption for the generation of hydrogen or the conversion of H_2S into elemental sulfur. Including these additional energy requirements to this estimate would put it in the range of the above estimate. This study has used the range 3-6%.

Coal Cleaning (Physical)

The commercial availability of the physical cleaning of coal for the removal of sulfur is still in the early stages of development. However, the physical cleaning of coal to reduce ash forming impurities has been in use for many years. In addition to removing ash, the coal cleaning process potentially provides several other benefits:

- Concentration of carbon in the clean coal. This is important because the carbon content of the feedstock will determine the heating value and hence the capacity of a boiler limited coal-fired power plant. The lower the heating value, the more coal is needed and the limit of coal accepted in the boiler is soon reached. Therefore, with coal cleaning instead of low sulfur-low Btu coal, the capital energy requirements can be minimized for any capacity of unit built. In addition, the energy requirement for transportation is reduced due to the higher Btu content per ton.

- Reduction in concentration of trace elements. This in turn can reduce corrosion effects and reduce transient energy requirements for boiler downtime.
- Uniform quality of product including ash, moisture, and Btu content. This is an advantage for controlling any combustion process.

The most highly developed coal cleaning process to date is the two-stage froth flotation process which can remove over 90% of the pyritic sulfur in fine-size coals. The process involves a first-stage standard coal flotation step to remove high-ash refuse and some of the coarser pyrite as tailings. The first-stage froth concentrate is then retreated in a second bank of flotation cells in the presence of a coal depressant and a xanthate flotation collector to selectively float the remaining pyrite.

Energy is consumed in this process to crush and screen the coal, move the coal components through the beneficiation system, remove water from the coal, and operate emission control equipment. In addition, the Btu content of the coal that ends up in the rejected refuse stream needs to be inventoried as an energy requirement. The energy content of this reject stream, however, has the potential for being reclaimed, which would reduce the energy requirement attributable to coal preparation.

The energy requirement for the operation of a coal preparation plant is reported to be about 0.2% of the energy of the coal being prepared (Hittman, 1974). This estimate included only thermal drying for a small portion of the coal being treated. Cleaning of coal fines will require more thermal drying which increases energy requirement to about 1%. Several estimates for the loss in Btu content due to coal cleaning appear in the literature; these estimates are summarized in Table 3-7. The thermal loss in cleaning for the removal of pyritic sulfur will, of course, depend on the degree of sulfur removal achieved which is, in turn, dependent on the size of the particles of pyrites, and the ratio between pyritic and organic sulfur.

TABLE 3-7

ESTIMATES OF BTU CONTENT LOSS DUE TO PHYSICAL COAL CLEANING

Process Description	Energy Requirement (percent of fuel heating value)	Reference
Coal Washing	2.7-3.5	[Energy, 1975]
Froth Flotation	15	[Hittman, 1974]
Coal Cleaning	5.85	[Lovell, 1975]
Coal Cleaning	5-7	[EPA, 1975a]
Coal Cleaning	12	[CEQ, 1973]
Coal Washing	10	[Mitre, 1974]
Coal Cleaning (with significant total sulfur reductions)	20-30	[Mitre, 1974]

Because coal washing for the removal of sulfur is still a developing technology, it can be expected that the energy requirement for its practice will be different in 1983 than it was in 1974. For this reason, we determine different values of the energy requirement associated with coal washing for the two years under consideration.

For 1974, we base our estimate on the work of Lovell (1975), who reports that utility coal which received pretreatment in this period can be classified into two levels of preparation:

Level A - Removal of gross, noncombustible impurities, but control of particle size and promotion of uniformity. Ninety-five percent material yield and 99% thermal recovery. Little change in sulfur content.

Level B - Single-stage beneficiation following minimal component liberation. Particle sizes less than 3/8 inch usually not prepared. Eighty percent material yield and 95% thermal recovery. The sulfur removed varies with different coals, but is approximated as follows:

Region/States	Raw Coal Sulfur Percent	Cleaned Coal	Percent Sulfur Removal
Northern Appalachia	3.07	1.96	36
Southern Appalachia	0.93	0.81	13
KY (West), In, IL	3.92	2.72	31
OK, KN, MO, IO, AR	3.72	2.15	42

The energy requirement for the use of coal washing to remove sulfur in 1974 is taken to be the additional thermal loss experienced in going to Level B cleaning as opposed to Level A cleaning. This energy requirement is equal to 4.0% additional thermal loss. The difference in energy consumption for processing between the two levels of cleaning is considered negligible.

New coal preparation facilities recently going on line or in the planning are reported to provide Btu recoveries well in excess of 90% (Deurbrouck, 1974), that is, an energy loss of less than 10%. In addition, a newly developed process for removing sulfur from coal prior

to combustion is reported to remove about 5.0% of the coal itself (Hammond, 1975). These values of thermal losses from physical coal cleaning establish a range of 4.0 to 10.0% as the energy requirement for coal cleaning to remove sulfur in 1983.

Coal Cleaning (Chemical)

Chemical coal cleaning processes are in the developmental stages, but these processes are potentially attractive since preliminary information indicates that they may remove organically bound as well as pyritic sulfur. Sulfur is removed from the coal by reaction with hydrogen. One process under development is solvent refining which mixes pulverized coal with a solvent, heats the mixture, and then introduces hydrogen to produce a product with an ash content of 0.1%, a sulfur content of less than 1.0%, and a calorific value of 16,000 Btu/pound. As with physical coal cleaning, there will be an energy loss due to some of the Btu content of coal leaving the process in a refuse stream. This loss in Btu content is reported to be about 30 to 35% with an additional energy requirement of about 7% to operate the process (Energy, 1975).

Coal Conversion

Several technologies for converting coal to either a gas or liquid are currently being developed. The generation of electricity using low Btu gas from these processes would only realize a 20 to 30% electrical energy conversion efficiency (EPA, 1975a). Higher pressure combined cycle systems are under development that have the potential for overall cycle efficiencies competitive with those of conventional fossil-fuel fired power plants. Coal conversion and chemical coal cleaning technologies are not expected to be widely available within the time frame of this study, i.e., prior to 1983.

Control Chemical

For power plants employing flue gas desulfurization systems which use lime as the sorbent the energy consumption involved in the calcining of limestone to lime needs to be counted. The Bureau of Mines completed a comprehensive canvass of energy used in lime plants in 1973 which

determined that 6.57 million Btu per ton are required for the production of lime (Minerals, 1973). This survey also reported that the lime industry depended on the use of coal and natural gas for most of its energy requirements. Coal supplied 46% and natural gas 45% of the total energy used, mostly for heat in the calciners. The choice of fuel for individual plants was usually based on geographic proximity to supplies, price, and availability of long-term contracts. The quantity of lime required for use in a FGD system varies according to the efficiency of the chemical reaction as well as the quantity of sulfur dioxide being removed. Figure 3-3 depicts the material and energy balances for a typical FGD system using lime as a sorbent. The energy requirement for the preparation of lime represents 1.98% of the energy input to the boiler.

3.2 In-plant Energy Requirements

Compliance with environmental regulations, by the application of environmental controls at fossil fuel power plants can require the additional expenditure of energy beyond that normally needed for the operation of the power plant. This section describes the control processes involved and estimates an energy requirement for each option at the plant site.

Sulfur Dioxide Removal

The in-plant control of sulfur dioxide emissions is primarily accomplished by the application of flue gas desulfurization (FGD) systems. There are two basic categories of FGD systems, nonregenerable (throwaway) systems which yield a significant waste stream, and regenerable systems which yield a saleable product of either sulfuric acid or elemental sulfur.

The most highly developed and widely utilized nonregenerable FGD system is the lime or limestone process. The application of either of these flue gas desulfurization processes can require energy for stack gas reheating and electricity to run the process equipment. The stack-gas exit temperature for a new coal-fired electric power plant can be reduced from 300°F to 125°F by the application of a flue gas scrubbing

MATERIAL BALANCE: tons/hour

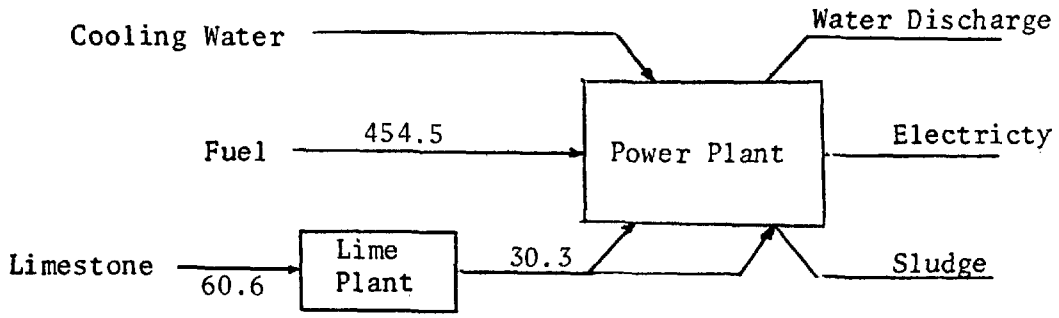

ENERGY BALANCE: Btu/hour

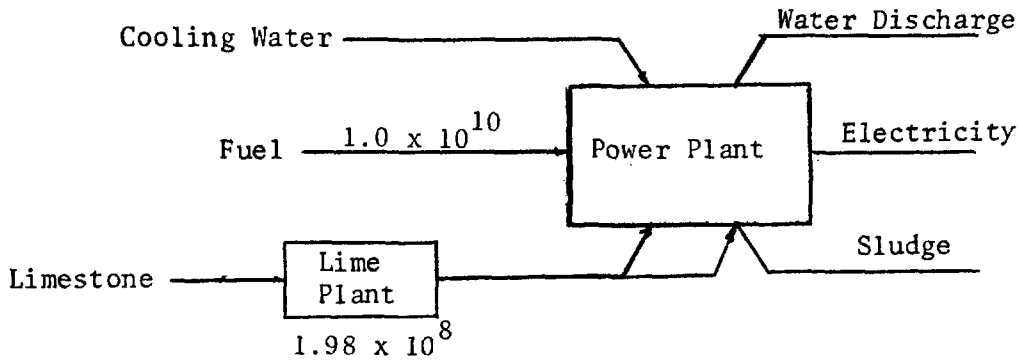

Basis: 1.0×10^{10} Btu/hour, energy input to boiler.

Assumptions:

3.5% sulfur coal, 11,000 Btu/lb.

85% sulfur removal by lime scrubbing at 128% stoichiometry

Figure 3-3 Material and Energy Balances for FGD System Utilizing Lime as Sorbent.

system (Ellis, 1975). This reduction in stack-gas temperature will decrease plume rise which in turn can increase ground level concentrations of sulfur dioxide. Therefore, many power plants reheat their stack gases to reduce ground level concentrations. The process equipment involved in the application of FGD systems includes fans to overcome the pressure drop of the system and pumps to move the limestone or lime through the system.

Several estimates of the energy requirements for the application of nonregenerable flue gas desulfurization systems appear in the literature. Table 3-8 summarizes these estimates. The energy requirement for stack gas reheating has been reported to be 2% of rated plant capacity to achieve a reheat temperature increment of 50°F (Ellis, 1975). Depending on the degree of reheat employed, this energy requirement can be as low as 0% to a high of 7%. This latter extreme would occur if the stack gases were reheated from 125°F to 300°F. Table 3-9 presents the summary results of work done by Haller and Nordine for the Commerce Technical Advisory Board Panel on SO_2 Control Technologies. The energy requirement for stack gas reheating is 1.5%, and the energy requirement for the operation of process equipment is 4.0% for limestone and 3.5% for lime FGD systems. The limestone-based systems have a larger in-plant energy requirement due to limestone grinding and additional material handling requirements. An Edison Electric Institute/Clean Air Act Coordinating Committee survey of approximately 40 installations yielded an average energy consumption of 4.0%. The survey included both regenerable and nonregenerable FGD systems.

In addition to operating energy requirements, the application of FGD systems may result in a derating of plant capacity depending upon whether the power production is turbine- or boiler-limited. If a plant is turbine limited, the excess steam from the boiler can be used to reheat the stack gases.

Regenerable FGD processes have additional energy requirements to operate their sulfur recovery systems. Three systems for removing SO_2 from flue gases, in which the sulfur content is recovered either as sulfuric acid or elemental sulfur, have been offered commercially:

1) sodium solution scrubbing - sulfur production

2) magnesium oxide (MgO) scrubbing - sulfuric acid production

3) catalytic oxidation - sulfuric acid production

TABLE 3-8

ENERGY REQUIREMENTS FOR NONREGENERABLE FGD SYSTEMS
(percent)

FGD SYSTEM	PLANT	REHEAT	PROCESS	TOTAL	REFERENCE
Limestone	Will County	1.5	4.0	5.5	[Haller, 1975]
Limestone	-	1.6	2.3	3.9	[EPA, 1973]
Limestone	-	3.9	4.7	8.6	[Ford, 1975]
Limestone	Will County	2.5	4.0	6.5	[Ford, 1975]
Limestone	Detroit Edison	5.4	4.1	9.5	[Ford, 1975]
Limestone	Widows Creek	3.2	1.7	4.9	[Ford, 1975]
Limestone	New Unit	-	-	3.4	[Jonakin, 1975]
Limestone	Existing Unit	-	-	3.9	[Jonakin, 1975]
Nonregenerable		-	-	1.5 - 4	[PEDCo, 1975]
Lime	-	1.5	3.5	5.0	[Haller, 1975]
Lime	-	1.6	1.9	3.5	[EPA, 1973]
Lime	New Unit	-	-	3.3	[Jonakin, 1975]
Lime	Existing Unit	-	-	4.0	[Jonakin, 1975]
Molten Carbonate		-	<1	-	[Botts, 1972]
Nonregenerable	-	-	-	3 - 6	[EPA, 1975a]

TABLE 3-9

SUMMARY OF ENERGY REQUIREMENTS FOR LIME AND LIMESTONE FGD SYSTEMS (Haller, 1975)

Component	Energy Requirement (percent of plant energy) Lime	Limestone
Pre-plant - Control Chemical		
Extraction	0.054	0.063
Preparation	1.98	-
Transport	0.085	0.195
In-plant - Reheat	1.5	1.5
- Equipment	3.5	4.0
Post-plant - Fixating Agent		
Extraction	0.017	0.029
Preparation	0.64	1.09
Transport	0.027	0.046
- Fixated Sludge		
Transport	0.082	0.093
Total	7.9	7.0

In sodium solution scrubbing, after removal of particulates either by an electrostatic precipitator or water scrubbing, the flue gases are washed with a recirculating solution of sodium salts in water for SO_2 absorption. The SO_2 is stripped from the scrubbing solution and sodium sulfite precipitated by use of steam. The sodium sulfite is recycled to the scrubber, and the concentrated SO_2 is reacted with methane for reduction to elemental sulfur.

In MgO scrubbing, the flue gases are scrubbed using a recirculated slurry of MgO and reacted magnesium-sulfur compounds in water for removal of SO_2. A portion of the slurry is bled off for solids separation. The salt crystals ($MgSO_3$ and $MgSO_4$) are removed from the liquid, dried and calcined to form SO_2 and MgO for recycling. The SO_2 is fed to a contact sulfuric acid plant.

In catalytic oxidation, fly ash is removed from the flue gas by a hot electrostatic precipitator; then the SO_2 is catalytically converted to SO_3, which combines with moisture in the flue gas to form sulfuric acid mist. The acid mist is removed in a packed tower scrubber using a recycled sulfuric acid stream to produce sulfuric acid.

Table 3-10 summarizes the reported estimates of energy requirements for the operation of regenerable FGD processes. In addition to these three processes, several other regenerable processes, such as sodium citrate scrubbing and ammonium scrubbing-ammonium bisulfite regeneration, are in various stages of development. In general, the use of a regenerable process, as opposed to a nonregenerable FGD process, will entail an additional energy requirement of 3% for in-plant energy consumption. Nonregenerable FGD systems, however, will have additional energy requirements for sludge disposal operations. For the purposes of this study, the energy requirements of only nonregenerable FGD systems were considered.

Particulate Removal

The in-plant control of particulates at fossil fuel power plants is primarily accomplished by the application of either electrostatic precipitators or multiple cyclone mechanical collectors. The energy requirements for these two types of equipment are different because their collection techniques and efficiencies are different. Electrostatic

TABLE 3-10

ENERGY REQUIREMENTS FOR REGENERABLE FGD SYSTEMS

REGENERABLE PROCESS	PRODUCT	ADDITIONAL ENERGY REQUIREMENT FOR RECOVERY PROCESS (percent)	TOTAL ENERGY REQUIREMENT FOR RECOVERY PROCESS (percent)	REFERENCE
Sodium Solution Scrubbing	Sulfur	-	8.6 - 9.6	[Jonakin, 1975]
Sodium Solution Scrubbing	Sulfur	3	-	[EPA, 1975a]
Sodium Solution Scrubbing	Sulfur	3	-	[PEDCo, 1975]
Magnesium Slurry	Acid	-	5.5 - 5.6	[Jonakin, 1975]
Magnesium Slurry	Acid	3.5	-	[EPA, 1973]
Magnesium Slurry	Sulfur	5.5	-	[EPA, 1973]
Magnesium Slurry	Acid	3	-	[PEDCo, 1975]
Catalytic Oxidation	Acid	3	-	[EPA, 1975a]
Catalytic Oxidation	Acid	3	-	[PEDCo, 1975]
Catalytic Oxidation	Acid	-	0 - 6.9	[Jonakin, 1975]

precipitators incorporate one or more high intensity electrical fields to impart an electrical charge to particles in the flue gas which are then attracted to a collecting surface maintained with an opposite charge. Since the collecting force is applied only to the particles, not to the gas, the pressure drop of the gas is only that of flow through a duct having the configuration of the collector. Hence pressure drop is both very low and does not tend to increase with time. In general, collection efficiency increases with length of passage through an electrostatic precipitator. Therefore, additional precipitators sections are employed in series to obtain higher collection efficiencies. Mechanical collectors rely on gravity and inertial forces for their operation so it is necessary to make the gas flow spin. Cyclone collectors consist of a cylindrical chamber into which the flue gas stream is directed at an angle near the top. The unit is constructed so that the gas stream whirls downward with increasing rapidity toward a cone-shaped base. Centrifugal force ejects the entrained particles out of the spinning gas stream onto the wall of the chamber. From there they fall into a collecting hopper while the air stream then swirls upward through a tube in the center of the unit. Depending on design, cyclone collectors can remove particles as small as 3 microns, although high-efficiency collection cannot be expected for particles under 15 microns. Power plants with mechanical collectors usually use multiple cyclones, which consist of several low-capacity units in place of a single larger one, because they can increase collection efficiency without using more energy.

Several estimates of the energy requirements for particulate control equipment appear in the literature and are summarized in Table 3-11. Several of these estimates appear in terms of either kilowatts or horsepower per thousand cubic feet per minute through the unit. This energy requirement can be recalculated into a percent of the power plant electrical output by using representative operating parameters. Because the energy requirement is expressed as a percent, it is equivalent to express it as a percent of the plant electrical output or the plant boiler heat input. A 1% increase in fuel consumption will yield a 1% increase in electricity consumption (see Appendix C).

TABLE 3-11

ENERGY REQUIREMENTS FOR PARTICULATE CONTROL EQUIPMENT

EQUIPMENT TYPE	Smallest particle collected (μ)[a]	Pressure drop (inches H_2O)	ENERGY REQUIREMENTS		Reference
			(kw/1000 cfm)[b]	(% plant output)	
Multiple Cyclones	5	2-10	0.5-2	0.2-0.9[c]	Stern, 1968
Cyclone	10	-	1.2	0.5[c]	Teller, 1972
Electrostatic Precipitator	0.2	-	0.75	0.3[c]	Teller, 1972
Electrostatic Precipitator	<0.1	0.1-0.5	0.2-0.6	0.1-0.3[c]	Stern, 1968
Electrostatic Precipitator	-	-	-	0.1	Oglesby, 1970
Venturi Scrubber	-	-	-	1-2	PEDCo, 1975
Venturi Scrubber	1	10-15	2-10	0.9-4.3[c]	Stern, 1968

[a] With 90-95 percent efficiency by weight

[b] Includes pressure loss, electrical energy

[c] Calculated assuming: 0.0489 lb flue gas/cfm @ 350°F, coal @ 11,000 Btu/lb, 37 percent plant thermal efficiency, and 15 lb flue gas/ lb fuel

The energy requirements actually used in this study are based on the industry survey results contained in Appendix A. The sample reported an average of 0.30% additional energy consumption for the operation of electrostatic precipitators and a negligible amount for multiple cyclones.

Nitrogen Oxides Removal

The control of nitrogen oxides emissions from fossil fuel-fired power plants relies primarily on the application of combustion modification processes. The objective of these processes is to lower NO_x formation during combustion. An alternative approach, which may be capable of much higher levels of NO_x control, is post-combustion removal of NO_x from the flue gases. This technique is at an earlier stage of development.

Combustion modification techniques are designed to reduce the flame temperature in the boiler, which is the key factor in NO_x formation in boilers (Aghassi, 1975). Two such modification techniques are flue gas recirculation and over-fire air, which is also described as two-stage combustion. It should be noted that recirculation is often used to improve combustion efficiency irregardless of its NO_x formation effects.

Flue gas recirculation lowers the flame temperature of combustion by reducing the overall sensible heat of the flue gas by dilution. A portion of the flue gas, usually between 15 and 20%, is recirculated through the burners along with the combustion air. This technique requires additional fan power and could result in a 10 to 20% decrease in load capacity in existing units due to increased gas flow rates. The over-fire air method lowers flame temperature by burning the fuel in two stages so that all the heat is not liberated at once. This is accomplished by burning the fuel in less than stoichiometric air conditions in the burner zone. At the same time, the remainder of the stoichiometric air is introduced, along with the excess air, through over-fire ports above the burner zone where the rest of the fuel is consumed. Over-fire air is the least expensive technique for controlling NO_x, incurring no loss in unit efficiency or increased operating expenses.

Thermal Pollution Control

The steam electric power plant category employs three general types of circulating water systems to reject the waste heat from the power plant. These systems are: (1) once-through cooling; (2) once-through with supplemental cooling of the discharge; (3) closed-cycle systems.

The use of once-through cooling results in the discharge of the entire amount of waste heat to the receiving body of water. The control of thermal effects resulting from once-through cooling is often accomplished through the use of diffuser discharge structures, which result in increased, rapid thermal mixing in the receiving body of water. Since once-through circulating systems tend to have lower circulating water temperatures than closed-cycle systems, power plants with once-through systems generally have the best plant efficiencies. For the purposes of this study, the employment of once-through cooling systems is assumed to be a base case condition, with an associated fuel energy consumption from environmental controls of 0%.

In certain cases, supplemental heat removal systems (such as cooling towers) are placed in a once-through circulating flow path to reduce the total waste heat discharged to the receiving water body due to environmental considerations. The use of cooling towers for supplemental cooling generally results in the operation of the cooling tower in an open-cycle mode in the winter and closed-cycle mode in the summer, hence such supplemental heat removal systems are frequently called semi-closed systems.

Several types of closed-cycle cooling systems are used for waste heat disposal, all of which consume energy in excess of that required by once-through cooling systems. Closed systems recirculate water first through the condenser for heat removal, and then through a cooling device where this heat is released to the atmosphere, and finally back to the condenser. Three basic methods of heat rejection are used. The one of most commercial significance in the power industry is wet (evaporative) cooling, using cooling towers. A second method of closed system cooling is the use of cooling ponds, which are normally artificial lakes constructed for the purpose of rejecting the waste heat from a power plant. The use of cooling ponds consumes additional energy

needed to compensate for the decreased thermal efficiency which results from elevated condenser temperatures. They require a very large amount of land for satisfactory operation.

Dry cooling towers, in which heat is transferred by conduction and convection, have found very limited use thus far in the fossil fuel power plant industry.

Spray systems can be utilized to reduce the large area required by cooling ponds. Spray ponds or canals consume energy for the pumping of water through the spray nozzles in addition to any energy needed to compensate for decreased thermal efficiency of electrical generation resulting from increased turbine backpressure.

The operation of cooling towers requires energy to pump the cooling water back and forth between the towers and the condensers. In addition, mechanical draft towers consume electricity to operate fans which blow air through the towers. Finally, increased turbine backpressure due to the use of cooling towers results in additional fuel requirements per kilowatt-hour of electricity generated because of lower thermodynamic efficiencies. Natural draft wet towers may require a larger energy requirement than mechanical draft towers, in spite of the fact that no fans are needed, because of a greater increase in turbine backpressure. Dry cooling towers, which consist of an air cooled heat exchanger mounted inside a cooling tower chimney, have an energy requirement which is higher than wet towers due to a still greater increase in design turbine backpressure.

Several estimates of energy requirements for closed-cycle cooling systems appear in the literature; these values are summarized in Table 3-12. For the purposes of calculating 1974 environmental energy consumption, the energy requirements used for the application of closed-cycle cooling systems to the base year population are listed below.

Type of Cooling Method	Energy Requirement (percent)
Once-through	0.0
Cooling ponds	1.0
Spray ponds and semi-closed	1.3
Mechanical draft towers	2.5
Natural draft towers	2.5

TABLE 3-12

ENERGY REQUIREMENTS FOR CLOSED-CYCLE COOLING SYSTEMS

COOLING SYSTEM	ENERGY REQUIREMENT (Percent)	REFERENCE
Closed-Cycle Cooling	3.0	[Ford, 1975]
Spray Units	1.3	[EPA, 1974a]
Wet Cooling Tower, New	1.0	[EPA, 1973a]
Wet Cooling Tower, Retrofit	2.5 - 3	[EPA, 1973a]
Mechanical Draft Wet Tower	1.0	[Hirst, 1973]
Mechanical Draft Wet Tower	2.0	[Dynatech, 1969]
Mechanical Draft Wet Tower	2.7	[EPA, 1974a]
Natural Draft Wet Tower	2.0	[Hirst, 1973]
Natural Draft Wet Tower	3.0	[Dynatech, 1969]
Natural Draft Wet Tower	4.5	[EPA, 1974a]
Dry Cooling Tower, New	5.0 - 10.0	[EPA, 1973a]
Dry Cooling Tower, New	6.0	[Hirst, 1973]
Dry Cooling Tower, New	4.0	[Dynatech, 1969]

Wastewater Pollution

Power plants produce several diverse wastewater streams with different pollutants and different flow characteristics. Frequently, the most feasible concept of treatment consists of the combination of all compatible wastewater streams, with equalization or holding tanks to equalize the flow through the treatment units. Figure 3-4 shows a typical flow diagram for a central treatment plant for coal-fired power plants.

Wastewater treatment facilities for treating power plant chemical wastes, therefore, consist essentially of a series of tanks, pumps, and interconnecting piping, with additional special equipment such as pressure filters, vacuum filters, centrifuges, or incinerators added as may be required.

The energy consumed for the treatment of chemical wastes at power plants is reported not to be of significant consideration (EPA, 1974a). Most of the processes used for the treatment of chemical wastes require no input of energy other than that required for conveying the liquid. Some of the processes involved in the technology for achieving no discharge of pollutants involve a change of state from the liquid phase to the vapor phase, and others such as vacuum filters and reverse osmosis require substantial mechanical energy. However, these processes are generally applied to only a small portion of the total wastes, so that the overall effect is negligible. Based on the flow diagrams for a central chemical wastes treatment plant and for complete treatment facilities designed to achieve no discharge of pollutants, the estimated energy requirements for central waste treatment are less than 10 Kw per 100,000 Kw of plant capacity, or less than 0.01 percent of the plant output (EPA, 1974a). For complete treatment and reuse, including steam evaporation to dry material for ultimate disposal, the energy requirements are less than 0.2 percent of the plant output. For plants capable of achieving no discharge by utilizing evaporation ponds, energy requirements are about 0.04 percent of the plant output (EPA, 1974a).

Plant Conversion

The environmental energy consumption associated with plant modification is concerned with changes in the overall energy efficiencies of the

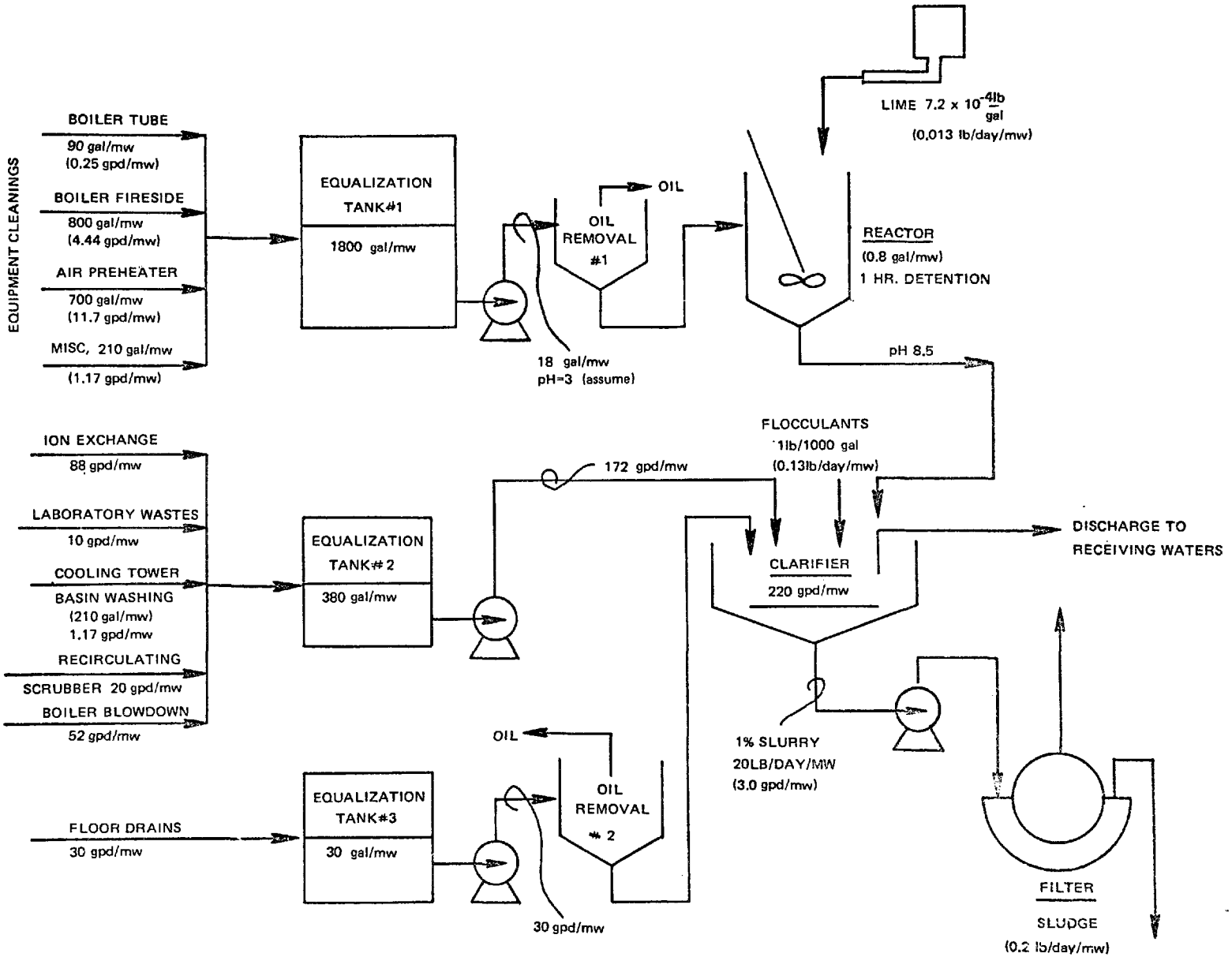

Figure 3-4 Flow Sheet - Coal Fired Central Treatment Plant From: EPA, 1974a

generation of electricity by substituting different fuels or processes in conjunction with environmental controls or regulations. The fuel switches evaluated for changes in in-plant energy consumption include the substitution of low sulfur western coal for higher sulfur eastern coal, the conversion of oil- or gas-fired units to burn coal, and the use of supplemental fuel from solid wastes. The process variations evaluated include the use of fluidized bed combustion as opposed to traditional boiler configurations, improvements to power plant efficiency, and the use of total energy systems.

The Substitution of Low Sulfur Western Coal

The substitution of low sulfur western coal for higher sulfur eastern coal will require more energy for all aspects of fuel handling due to the typically lower heat content of western coals. Assuming an energy requirement of four percent to operate the boiler feed pumps and fans in the power plant (PEDCo, 75) and a 25 percent increase in fuel handling requirements due to the substitution of lower heat content western coal, the additional energy requirement for the operation of the plant would be about 0.5 percent. In addition, the use of lower heat content fuel could cause a capacity derating if the boiler were limited in the number of pounds per hour of fuel that it could burn.

Coal Conversion

The conversion of oil- or gas-fired power plants to burn coal will result in differing energy impacts depending on whether or not the burning of coal is compatible with the boiler configuration. Some plants currently burning oil or gas can be converted to burning coal by minor equipment changes or maintenance, and these plants would require a negligible capacity derating or additional energy requirement for their operation. In some cases, however, there would be a period of downtime required to effect these changes.

Some boilers currently burning oil or gas cannot be converted to burn coal without a significant decrease in their thermodynamic efficiency. These plants can continue to operate but they will experience both a capacity derating and increased energy requirements due to the

decreased thermodynamic efficiency. Alternatively, the boilers can be replaced with new coal fired units. This change of equipment will cause a period of downtime during which the electricity normally generated by the plant will have to be obtained from another power plant or generating network. If this electricity is generated by a unit of lower efficiency or at some significantly greater distance than the existing plant to the area of electrical consumption, then there will be an additional transient energy requirement during this period.

Supplemental Fuel from Solid Wastes

The use of shredded solid wastes as a supplemental fuel in fossil fuel fired power plants has the potential to reduce energy consumption for the generation of electricity and the disposal of solid wastes. In this approach, solid wastes which have been sorted to reclaim recyclable materials and eliminate noncombustibles are shredded and fed to utility boilers with ash-handling facilities as a supplement to the fossil fuel being burned. The energy requirements for this system are involved in the solid waste processing. There are, however, several energy benefits. The energy requirement for the disposal of the solid wastes is eliminated, the energy content of the solid wastes is recovered, and for the fossil fuel that is replaced by the solid wastes, the energy for extraction, processing, and transportation of that quantity of fossil fuel is eliminated.

The combustion of solid waste for electric power production has important environmental impacts in the air pollution and solid waste areas. Thermal pollution is not affected, since the measure entails substitution of one energy source for another. A recent report (EPA, 1974b) on the test project in St. Louis indicates that solid waste combustion in power plants may actually increase air pollutants. It notes that particulate emissions from a solid-waste fired boiler increased, and contrary to expectations, sulfur dioxide emissions were not noticeably decreased. It is likely that better design will eliminate these negative environmental impacts of solid waste combustion; nevertheless, they appear to be stumbling blocks at the moment. Combustion of solid waste can have an extremely positive effect on reduction of solid waste pollution by reducing landfill demand.

Fluidized Bed Combustion

Fluidized-bed combustion is a developing technology which may be competitive with conventional plants using stack gas desulfurization equipment. Fluidized-bed boilers use a system in which crushed or coarse ground inert materials such as sand, shale, or limestone are fluidized or floated on air, and coal is injected continuously into the hot bed at such a rate that is usually no more than 5% combustible in the bed at any one time. Fluidized-bed boilers may have slightly broader application than conventional boilers due to low environmental impacts and the potential to use a wide range of fuels, including municipal refuse. These units are principally applicable to new installations, although some limited retrofit applications are being considered.

Environmental impacts of fluidized-bed units are small in terms of sulfur dioxide, nitrogen oxides, and particulate emissions. Nitrogen dioxide emissions can be controlled to 0.2 pounds per million Btu, well below the New Source Performance Standard of 0.7 pounds per million Btu. Preliminary data indicate sulfur dioxide removal efficiencies of 90 to 95%. Preliminary indications show that particulate emissions are more coarse and therefore are easier to collect (EPA, 1975a).

The fluidized-bed boilers should generate power at least as efficiently as conventional power boilers with scrubbers. Table 3-13 presents comparative estimates of overall thermal efficiencies.

Improved Power Plant Efficiency

Systems for producing energy are, for the most part, inefficient. For electric power systems, a major source of inefficiency is the power plant itself. There are, however, a number of promising techniques, including magnetohydrodynamics and combined cycles, to increase power plant efficiency from 33% to 50% and beyond. Further, by locating power plants near industrial complexes, power plant heat that is now wasted through discharge into the environment could be used in industrial processes.

In terms of energy consumption for environmental control, increasing the conversion efficiency of a power plant from 38% to 50% is more than equivalent to installing a control device that removes 24% of the pollutants.

TABLE 3-13

THERMAL CYCLE EFFICIENCY OF FLUIDIZED-BED BOILERS (Percent)

Boiler Type	First Generation	Second Generation
Fluidized-bed		
Atmospheric	36	40
Pressurized	38	47
Conventional with stack gas scrubber	37	37

Source: "Assessment of Alternative Strategies for the Attainment and Maintenance of National Ambient Air Quality Standards." Pedco Environmental Specialist, Inc. Cincinnati, Ohio. December 1974.

Improved power plant efficiency would reduce pollution and energy requirements from extraction, transportation, and processing because less fuel would be used. Installation of controls at a power plant would have no such systemwide effects.

Total Energy Systems

Total energy systems are on-site electricity generators which are designed to recover and use what would otherwise be waste heat. In terms of Btu's, the amount of waste heat is approximately twice the amount of electricity generated. There is, therefore, a significant potential for energy savings by the application of total energy systems. In addition to recovering and using waste heat to provide space heating, air conditioning, and domestic hot water, total energy systems also reduce the energy requirements for the transmission and distribution of electricity by being located near the point of use. A typical total energy system is illustrated in Figure 3-5 which presents a comparison with electricity generation by a central station power plant.

Noise Pollution Control

The environmental energy consumption associated with the Noise Pollution and Abatement Act has been estimated by the EPA to be about 0.1% for noise control at gas turbine plants and less at other electric power facilities (EPA, 1973).

Intermittent Control Strategies

Intermittent control strategies rely on the dispersion capacity of the atmosphere to meet ambient air quality standards. When meteorological conditions cause a reduction in assimilative capacity, intermittent strategies take steps to reduce the emission rates of the source. Emission rates are varied through fuel switching and load shifting. Tall stacks, which are normally incorporated into load shifting, or fuel switching supplementary control systems are used to enhance the dispersion of pollutants. The basic elements of an intermittent control system are

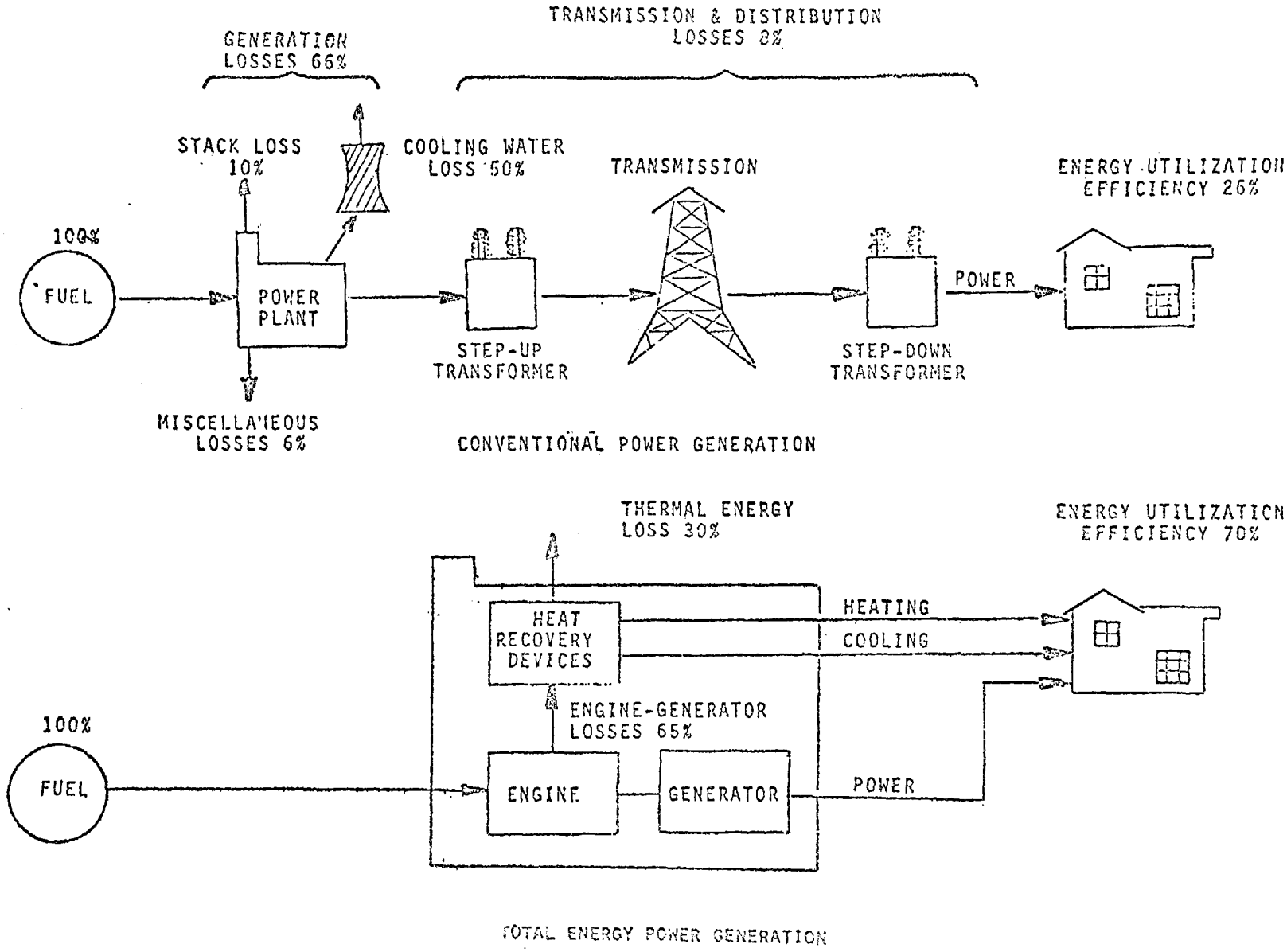

Figure 3-5 Energy Utilization Efficiency - Central Station vs. Total Energy

air quality monitoring, meteorological data, scheduled emission rates, a predictive air quality model, and the necessary means to vary the emissions.

Fuel Switching

Fuel switching requires a utility to provide for storage and firing of an alternative low-sulfur fuel. The alternative fuel would be used when the monitoring instrumentation and/or the predictive model indicated that air quality standards would be violated under normal fuel operation. The energy requirements associated with this control strategy are primarily related to the transportation and use of the low sulfur fuel, which are elaborated under the discussions of low sulfur western coal, coal cleaning technologies, and oil desulfurization. There is a negligible energy requirement for the operation of the monitoring network with its real-time data transmittal.

Load Shifting

Load shifting is a procedure that reduces the rate of emissions from a specific plant by shifting scheduled generation to another plant on an interconnected electrical transmission system. This system is similar in concept and operation to the fuel-switching system. Energy requirements will vary depending upon the units involved in the load shift and upon transmission system losses. Load shifting to a unit of lower generating efficiency and at a much greater distance to the demand location can realize a significant additional energy requirement.

It appears that no significant energy requirements occur on a nationwide basis with SCS operation. Approximately one-third of the plants were identified in the 100 plant sample as SCS candidates (ERT, 1975)., i.e., able to prevent violations of air quality standards with use of SCS. SCS operations for that group of plants even when triggered at a threshold of 70 percent of standards, was required an average of only 8 percent of the time. If the SCS is based on switching of fuel, an energy consumption is involved in transporting the lower sulfur fuel, i.e., a 4 percent energy consumption for coal transport to Region B is therefore multiplied by 8 percent of the time, yielding 0.32 percent

energy consumption for the plant. A capacity loss of 5 percent ("most likely" reduction for use of lower Btu coal in boilers designed for high Btu coal) is multiplied by the 8 percent, resulting in a 0.4 percent capacity loss.

If the SCS is based on load shifting, the minimal energy consumption of longer transmission distances is all that needs to be considered. For example, if the energy consumption due to line loss is 2 percent, energy consumption for SCS would be 0.16 percent. The capacity loss is determined by the actual necessary reduction. If a 30 percent reduction is required 8 percent of the time, a capacity loss of 2.4 is experienced.

When the SCS option is expanded to the total national population, the energy consumption and capacity losses are reduced by a factor of about three, since only a third of the plants in the sample were identifed as SCS candidates.

Tall Stacks

Tall stacks are designed to prevent high ground-level pollutant concentrations in the vicinity of the source, and can considerably alter the dispersive characteristics of the plume. Tall stacks require no additional energy expenditure and, due to additional draft provided, may reduce the plant's overall energy requirement.

3.3 Post-plant Energy Requirements

The energy requirements associated with post-plant environmental energy consumption are directly related to the disposal of waste products from a pollution control system or the additional transmission losses associated with restrictive power plant siting requirements due to environmental legislation.

Coal Ash Disposal

Coal-burning power plants have solid waste problems associated with the disposal of fly ash, bottom ash, and boiler slag; of these, fly ash is the major constituent. Power plants burning coal currently sluice the fly ash to a pond where the solids, over a period of time, settle

out, allowing the sluice water to flow into a water-course. The sluice water typically contains about 1,000 ppm dissolved solids (BOM, 1974). The energy requirements for this operation can be categorized into three areas: disposal site preparation, waste transport, and waste treatment. The energy requirements for disposal site preparation can be considered negligible because, once the pond is prepared it will last for a number of years and thus, the contribution will average out to be quite small. The energy requirement for waste transport will also be small, owing to the fact that most power plants use on-site ash ponding facilities, so the distance of transport is very short. The waste treatment category of energy consumption for ash disposal can also be considered small at present because little, if any, treatment is used.

Desulfurization Sludge Disposal

The throwaway desulfurization methods which use lime or limestone in a wet-scrubbing process generate sludges requiring disposal. For coal burning plants, these processes can generate waste products exceeding the amount of coal ash generated. For example, it has been calculated that the volume of sludges requiring disposal is approximately 2.40 to 3.27 times the normal coal ash disposal rate (BOM, 1974). For plants burning oil, which produce so little ash that removal is not always practiced, installation of waste solids disposal facilities can create even greater pollutant problems. There are three potential techniques available for the disposal of desulfurization sludges. These are ponding, landfill, and use.

Ponding is widely used by electric utilities for disposal of fly ash. Generally, ponds are used when adequate land is available near the power plant. Ponding of lime or limestone sludges presents many problems, however, and should be considered a temporary holding process, not a long-term approach. EPA considers permanent land disposal of raw (unfixated) sludge to be environmentally unsound, because it indefinitely degrades large quantities of land (EPA, 1975b).

Commercial processes to fixate sludge are currently available. These processes involve the addition of suitable chemicals to react with the sludge. The reactions are similar to those employed in the formation of cement and transform the sludge into a hard, durable mass. The

fixated sludge can be deposited as landfill material on or off the power plant property. Fixation of the sludge will greatly reduce its environmental impact. Land degradation can be avoided by covering the fixated sludge with earth when the disposal area is full. Ground water pollution, a potential problem if soluble chemical materials are leached from the sludge, is also minimized by fixation.

In addition to landfill, limited uses for sludge are possible in other application. Processes are available that can transform mixtures of lime or limestone sludge, fly ash, additives, and aggregates into high strength road base usable in primary highways, airport runways, trucking terminals, etc.

The energy requirements for the disposal of desulfurization sludges by landfilling are primarily for the chemical fixating agents and the transportation to the landfill site. The assumed fixating agent requirements are ten percent lime (dry basis) of the total ash and sludge waste generated by the power plant for limestone scrubbing (Heller, 1975). For lime scrubbing, 6.5 percent fixating agent is assumed since the sludge already contains about 3.5 percent unreacted lime. The energy consumption associated with the fixating agent therefore needs to include the energy costs of limestone mining, calcining of limestone to produce lime, and transportation from the quarry to the plant. The additional energy requirement for transporting the fixated sludge to the landfill site is calculated based on a ton-mile transport by truck. Figures 3-6 and 3-7 display the material and energy balances for sludge fixation processes for FGD systems using limestone and lime respectively. The energy requirement for these processes are 1.26 percent for the limestone and 0.75 percent for the lime.

3.4 Capital Energy Requirements

Capital energy is the energy consumed for the construction of control equipment or the implementation of a control option. Examples of this would be the energy consumed for the fabrication and installation of an electrostatic precipitator to control particulates, or the energy consumed for the fabrication and installation of a coal slurry pipeline for the transport of low sulfur western coal.

MATERIAL BALANCE: tons/hour

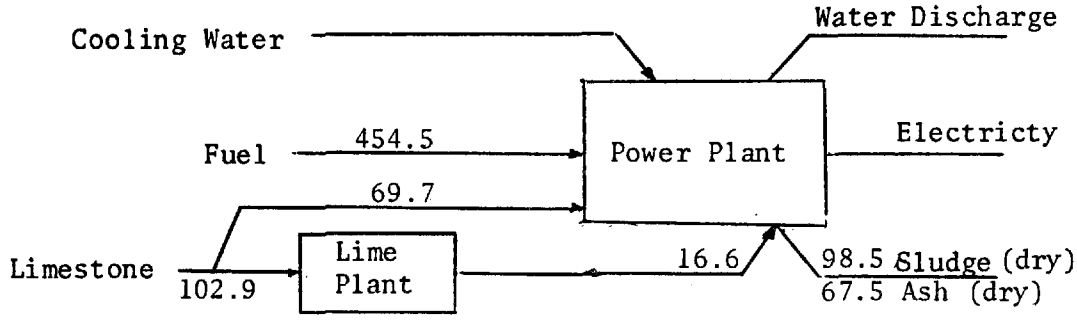

ENERGY BALANCE: Btu/hour

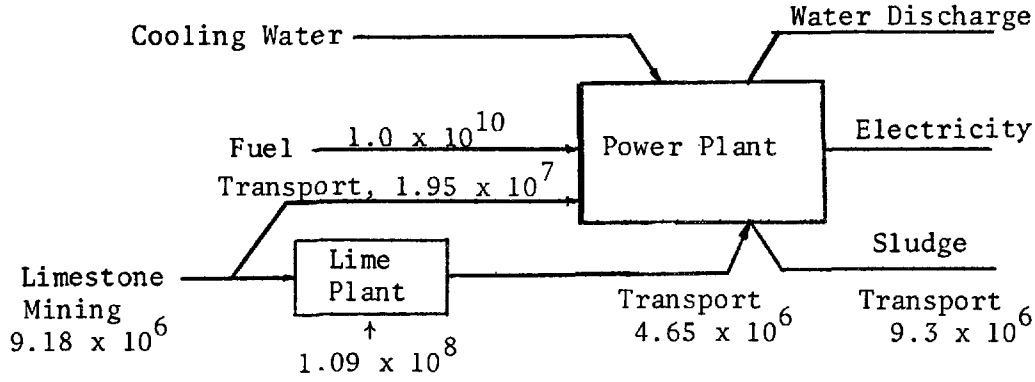

Basis: 1.0×10^{10} Btu/hour, energy input to boiler.

Assumptions:

3.5% sulfur coal, 11,000 Btu/lb.

85% sulfur removal by limestone scrubbing at 165% stoichiometry

99% scrubber particulate collection efficiency

Transport from quarry to plant, 100 miles by truck

Transport from plant to landfill, 10 miles by truck

Figure 3-6 Material and Energy Balances for FGD System Utilizing Limestone as Sorbent and Lime as Fixating Agent for the Treatment of Sludge.

MATERIAL BALANCE: tons/hour

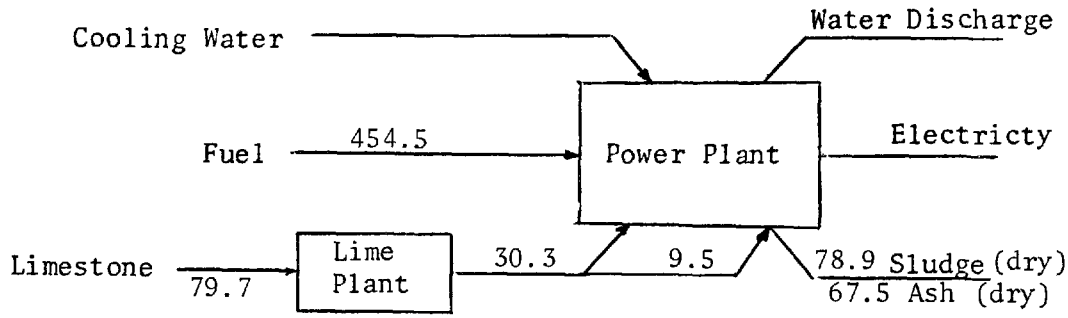

ENERGY BALANCE: Btu/hour

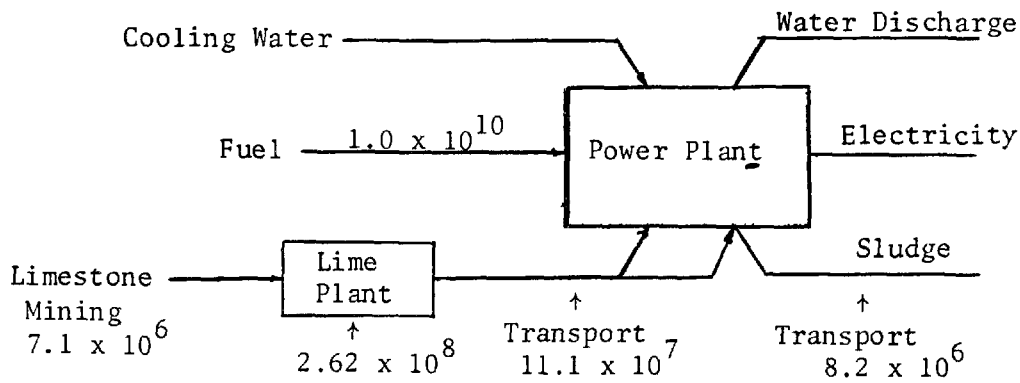

Basis: 1.0×10^{10} Btu/hour, energy input to boiler.

Assumptions:

- 3.5% sulfur coal, 11,000 Btu/lb.
- 85% sulfur removal by lime scrubbing at 128% stoichimetry
- 99% scrubber particulate collection efficiency
- Lime plant at quarry, transport from quarry to plant 100 miles by truck
- Transport from plant to landfill, 10 miles by truck

Figure 3-7. Material and Energy Balances for FGD System Utilizing Lime as Both Sorbent for Sulfur Removal and Fixating Agent for Treatment of Sludge.

The few estimates of capital energy requirements which appear in the literature are shown in Table 3-14. These estimates are based on the application of a Btu/dollar ratio to the capital cost involved to determine the capital energy requirement (Ford, 1975). The ratio of Btu/dollar is derived from input-output analysis of the Standard Industrial Classification "New Construction, Public Utilities" of 0.076 million Btu per dollar of 1963 construction costs (Herendeen, 1974). This is a very simplified approach which does not evaluate energy consumption, but only compares capital costs. In addition, the Ford study attempts to convert the capital energy requirement, which is a one-time requirement or a steady state requirement by dividing the capital consumption by the expected lifetime of the control equipment. One inherent weakness in this approach is the difficulty in determining the expected lifetime of such equipment as scrubbers, which are prone to many problems of corrosion and scaling.

A better approach for determining capital energy requirements would be to inventory energy consumed for both the materials used and energy consumed during the installation. The following listing describes some of the important capital energy requirements associated with the implementation of environmental control options.

Sulfur Dioxide Control

- Use of low sulfur western coal
  - Railroad cars, engines and additional track
  - Slurry pipeline installation including coal preparation and dewatering facilities.
- Use of flue gas desulfurization
  - Fabrication and installation of system
  - Sulfur recovery facility
- Use of coal cleaning
  - Construction of coal preparation plant

TABLE 3-14

CAPITAL ENERGY REQUIREMENTS FOR ENVIRONMENTAL CONTROL

Environmental Control Option	Capital Energy Requirement (percent)
Nitrogen Oxides Control Equipment	negligible
Closed-Cycle Cooling Systems	negligible
Construction of Electrostatic Precipitator	0.02
Construction of Oil Desulfurization Facility	0.15
Construction of Limestone Scrubbing System	0.2 - 0.5

From: (Ford, 1975)

Thermal Pollution Control

- Closed-cycle cooling
  - Fabrication and installation of cooling towers, ponds, or canals

Particulate Control

- Collection equipment
  - Fabrication and installation of either electrostatic precipitators or mechanical collectors.

3.5 *Capacity Losses*

It can be expected that the energy consumption required to meet environmental regulations would also result in less energy being available to sell for an individual power unit. Table 3-15 shows the expected capacity losses for the prospective control systems. Each of the losses except that for coal transport is comparable to the electricity requirements shown in Table 3-3. When electricity is used in the plant, it is not available to sell and therefore represents a capacity loss. This may not result in a derating of the facility.

The exception in Table 3-3 is for the transportation of low sulfur coal into regions B & C. The amount of electricity which can be generated in a typical region B & C power plant is based on the Btu content of low coals. We assume that the boiler is sized based on a higher Btu content than that of low sulfur western coal. Because the boiler cannot hold as much western coal, we have assigned a 5-percent capacity loss as "most likely", 25 percent less Btu's less a normal 15 to 22 percent overdesign of boiler. This capacity loss does not, however, result in an energy consumption because that extra coal is not burned. Therefore, this 3 to 10 percent for boiler capacity does not show up on Table 3-2 or 3-3 as an energy consumption.

These capacity loss figures can be carried through the methodology discussed in Chapter 5 to produce the figures for expected nationwide capacity losses in Chapter 6.

TABLE 3-15

CAPACITY LOSS OR SALEABLE POWER REDUCTIONS, IN PERCENT

	Low	Most Likely	High
SO_2 Control			
Scrubber	2	3.5	5
Coal Wash*	0	0	0
Low Sulfur Coal Transportation (B and C)	3	5	10
Blending*	0	0	0
Oil Desulfurization*	0	0	0
Waste Heat Control			
Design	1.0	1.5	2.0
Retrofit	2.0	3.0	4.0
Particulate Control			
Electrostatic	0.2	0.3	0.4
Mechanical	∿0.0	∿0.0	∿0.0

*These processes could result in nominal changes in fuel heatint value but normal design practice allows for some fuel variability. Thus, no derating is considered.

4. BASE YEAR ENVIRONMENTAL ENERGY CONSUMPTION

This section estimates energy consumed in 1974 for environmental control based on the application of the energy requirements for environmental controls to the appropriate population of fossil fuel, steam electric power plants. The energy consumption for the application of environmental controls is expressed as a percentage of the fuel energy consumed at all fossil fuel, steam electric plants for the generation of electricity.

The additional energy consumption due to environmental controls for the base year of 1974 is summarized in Table 4-1. Sulfur dioxide control, the most significant pollution control category, consumed approximately 0.9 percent of the energy consumed by fossil fuel, steam electric plants in 1974. Thermal pollution control and particulate control had an energy consumption of approximately 0.2 percent each. Total environmental energy consumption was 1.30 percent.

In 1974, the consumption of fossil fuel energy at steam electric plants was approximately 15.0 quadrillion Btu (NCA, 1974). Each one-percent increment of energy required for environmental control in 1974 is therefore equivalent to 150.0 trillion Btu. The generation of electricity from fossil fuels requires additional energy beyond the value of the energy consumed at the boiler. Energy is required for the extraction, processing, and transport of the fossil fuel prior to its use at the power plant. Overall, the generation of electricity from fossil fuels requires about four Btu's of primary energy inputs to produce one Btu of electricity at its point of utilization (CEQ, 1973).

4.1 Sulfur Dioxide Control

The control of sulfur dioxide emissions from fossil fuel, steam electric utilities is required only for those plants burning either oil or coal. Natural gas is a sufficiently clean fuel such that its combustion does not require control for sulfur dioxide emissions. Several environmental control options were used during the base year. The pretreatment of fuels for the removal of sulfur included oil desulfurization and, to a limited extent, the physical cleaning of coal. Naturally occurring low-sulfur western coals were transported to the

TABLE 4-1

SUMMARY OF BASE YEAR (1974) ENVIRONMENTAL ENERGY CONSUMPTION

	Percent of Total Base Year (1974) Energy Consumption
Sulfur Dioxide Control	
Residual Oil Desulfurization	0.55
Physical Coal Cleaning	0.23
Use of Low Sulfur Western Coal	0.07
Flue Gas Desulfurization	0.04
Sub-Total - Sulfur Dioxide	0.89
Thermal Pollution Control	
Closed-Cycle Cooling	0.22
Particulate Control	
Particulate Control Equipment	0.20
Nitrogen Oxide Control	
Combustion Modifications	Negligible
Waste Water Pollution Control	
Waste Water Treatment Facilities	Negligible
Total	1.31

east to replace higher-sulfur eastern coals. In addition, sulfur dioxide was controlled after combustion by the application of flue gas desulfurization systems.

In the discussion that follows, each of these control options is evaluated with respect to its degree of utilization in 1974. Then, the appropriate energy requirement from Section 3 is applied to the controlled portion of the population of power plants to yield the environmental energy consumption.

Residual Oil Desulfurization

The reduction of sulfur content of residual oil for use by electric utilities has been achieved by several techniques. These techniques include the blending of low sulfur refinery products with the residual oil and the actual hydrodesulfurization of the residual stock. In 1974, the predominant technique for producing low sulfur oil involved blending the residual oil with other refinery stocks (Bruch, 1976), largely due to the very limited refinery capacity for the desulfurization of residual stocks available at the time.* The environmental energy consumption of residual oil desulfurization is difficult to determine because of the uncertainty created by the large amount of blending that occurred. Some of the refinery stocks blended with the residual oil have been desulfurized for other than environmental reasons, including the prevention of catalyst poisoning, the elimination of equipment corrosion and the maintenance of product purity. This situation will vary from refinery to refinery. Because of the uncertainty of the amount of blending occurring and the difficulty in assigning one energy requirement to this situation, two energy consumption determinations, a reasonable low value and a high value, are used to define the expected range for this energy requirement.

A method of determining the energy consumption of the desulfurization of residual oil is based on the application of an energy requirement for all residual oil with a sulfur content of 1.0 percent or less that was consumed by power plants in 1974. For the actual calculation it is considered that the reduction of high sulfur oil to a sulfur content

*As of January 1, 1975, the capacity for desulfurizing residual stocks was reported to be only 6,000 barrels per day (b/d) and the capacity for desulfurizing heavy gas-oil only 186,000 b/d (OGJ, 1975).

of between 0.0 and 0.3 percent sulfur requires a 6.0 percent energy consumption for desulfurization; the reduction of high sulfur oil to a sulfur content of between 0.3 and 1.0 percent requires 3.0 percent energy consumption; and reduction to a level of 1.0 percent sulfur or above requires no energy for desulfurization. The distribution of sulfur content in oil delivered to electric utilities for the period from November 1973 through October 1974 (Jimeson, 1975) is considered to be representative of base year conditions. The energy requirements of 6.0 and 3.0 percent are intended to bracket the estimates presented in the Ford Foundation study. In Table 4-2 the environmental energy consumption for residual oil desulfurization represents 2.55 percent of the energy value of all oil consumed by power plants. This sum is equivalent to 0.55 percent of the energy input to all of the fossil fuel, steam electric power plants.

Physical Coal Cleaning

The level of coal cleaning that was practiced during 1974 resulted in only a limited degree of sulfur content reduction. During this period, coal cleaning was primarily employed to remove ash-forming impurities from run-of-mine coal. The sulfur reduction that was achieved was due to the removal of that portion of sulfur present in the gross impurities.

On a nationwide basis, approximately 50 percent of the coal used by electric utilities received some degree of preparation [Deurbrouck, 1974]. Those coals receiving this preparation were located in the northeastern United States, which is the largest coal-using portion of the country. The range of coal beneficiation available at this time may be broadly generalized as follows [Lovell, 1975]:

Level One - No preparation, direct utilization of mine product

Level Two - Removal of gross, noncombustible impurities, but control of particle size and promotion of uniformity. 95 percent material yield and 99 percent thermal recovery. Little change in sulfur content.

TABLE 4-2

ENVIRONMENTAL ENERGY CONSUMPTION FOR THE DESULFURIZATION OF OIL USED IN STEAM-ELECTRIC PLANTS IN 1974

Range in Percent Sulfur in Oil	0.0 - 0.3	0.3 - 1.0	1.0 - 3.0	3.0 - 10.0
Fraction of Total Oil Used	(0.162)	(0.527)	(0.311)	(0.0)
Energy Requirement for desulfurization (percent)	6.0	3.0	0.0	0.0

Weighted Average of Oil-Fired Plants: 2.55 percent

Level Three - Single-stage beneficiation following minimal component liberation. Particle sizes less than 3/8-inch usually not prepared. 80 percent material yield and 95 percent thermal recovery. Limited ash and sulfur removal.

Level Four - Multi-stage beneficiation with controlled liberation. Usually incorporates dewatering and thermal drying. 70 percent material yield and 90 percent thermal yield. Maximum ash-sulfur rejection, calorific recovery, and calorific content.

Lovell reports that most of the utility coals receiving preparation in 1974 were beneficiated only to Level Two, but some were beneficiated to Level Three. To determine the environmental energy consumption for the physical cleaning of coal to reduce sulfur content in 1974, the energy requirement of 4.0 percent is applied to that portion of the coal that received Level Three beneficiation. This 4.0 percent energy requirement represents the additional loss in Btu content of the coal in going from Level Two to Level Three beneficiation. Of the 50 percent of the electric utility coals which received some degree of coal preparation, 20 percent is estimated to have received Level Three beneficiation. Thus, ten percent of the coal consumed by electric utilities receiving coal cleaning to reduce its sulfur content, yielding an energy consumption (or loss) of 34.0 trillion Btu. This value represents an environmental energy consumption of 0.23 percent of the energy input to fossil fuel, steam electric boilers.

Use of Low-Sulfur Western Coal

The degree of use of low-sulfur western coals in areas other than the west was determined from a review of the "Bituminous Coal and Lignite Distribution - Calendar Year 1974," published by the U. S. Department of the Interior, Bureau of Mines, as part of their Mineral Surveys [BOM, 1975a]. This report included statistics of the coal producing districts and shipments to each state for coal used by electric utilities. Table 4-3 summarizes the coal shipments identified as transport of western coal to eastern utilities. The traditional markets listed were determined from the principal coal producing districts

TABLE 4-3

SHIPMENTS OF WESTERN COAL TO EASTERN MARKETS, 1974 [BOM, 1975a]

	WESTERN COAL		TRADITIONAL MARKET				
Market Destination	Coal Producing District	Distance (mi)	Coal Producing District	Distance (mi)	Mileage Difference	Tons	Ton-miles (in 1,000)
New York	17, SW Colorado	1980	1, E Pennsylvania	240	1740	9	15,660
West Virginia	20, Utah	1800	8, Kentucky & W.VA	50	1750	64	112,000
	22, Montana	1800	8, Kentucky & W.VA	50	1750	66	115,500
Kentucky	22, Montana	1680	9, W Kentucky	50	1630	54	88,020
Michigan	20, Utah	1560	4, Ohio	300	1260	118	148,680
	22, Montana	1440	4, Ohio	300	1140	535	609,900
Wisconsin	17, SW Colorado	1200	10, Illinois	300	900	5	4,500
	19, Wyoming	1030	10, Illinois	300	780	1515	1,181,700
	22, Montana	1200	10, Illinois	300	900	564	507,600
Indiana	19, Wyoming	1320	11, Indiana	50	1270	2255	2,863,850
Illinois	19, Wyoming	1150	10, Illinois	50	1100	1445	1,589,500
	22, Montana	1230	10, Illinois	50	1180	5986	7,063,480
Missouri	19, Wyoming	1020	10, Illinois	240	780	1054	822,120
Iowa	20, Utah	1140	10, Illinois	300	840	40	33,600
	22, Montana	1080	10, Illinois	300	780	45	35,100
Total					(1100)	(13755)	15,191,210

shipping to each location on the list. As shown on this table, almost 13.8 million tons of western coal were shipped to eastern markets for utility consumption in 1974. Applying a value of 9,300 Btu/pound for the heat content of western coals, this equals 256 trillion Btu. Eastern coal, with higher heat content of 11,800 Btu/pound, would provide this same quantity of energy with only 10.9 million tons.

The transport distances involved are about 100 miles for the traditional coal shipments and about 1,200 miles for the western coal shipments, thus the shipment of western coal involved an additional transport distance of 1,100 miles. The eastern case yields a coal transport requirement of 1.1 billion ton-miles, while the western coal case yields a transport requirement of 16.5 billion ton-miles. The difference between these two, 15.4 billion ton-miles, when applied to a train transport energy requirement of 680 Btu/ton-mile yields an energy consumption value of 10.5 trillion Btu for the transport of western coal in 1974. This value is equivalent to 4.1 percent of the energy value of the coal transported and 0.07 percent of the energy input to fossil fuel, steam electric boilers. In addition, it is noted that the 4.1 percent requirement for transporting western coal to eastern markets would be consumed as diesel fuel.

Flue Gas Desulfurization (FGD)

Several different processes have been used in FGD units, but lime/limestone based systems are the most widely used. For the determination of the environmental energy consumption due to the application of FGD systems, all plants are assumed to use a lime or limestone based system with an energy requirement of 4.0 percent. This value is derived from the average energy requirements reported by the EEI/CACC survey (see Chapter 3).

Flue gas desulfurization is a developing technology, and as of the end of 1974, 18 installations with a total installed capacity of 3,835 megawatts were reported [Albrecht, 1975]. Availability of most of the operational FGD systems has been reduced because of installation, developmental repair, and modification problems. To reflect a limited degree of availability, an assumed load factor of 40 percent is used for

these plants. At a thermal efficiency of 33.3 percent (10,248 Btu/kwh), these 18 plants would consume 137.7 trillion Btu of fuel energy to generate 13.4 billion kilowatt-hours of electricity.

Applying the energy requirement to the 18 plants identified as using FGD systems in 1974, yields an environmental energy consumption of 5.5 trillion Btu for the application of FGD systems. Two of the 18 FGD installations were on oil-fired units [Jonakin, 1975], so this environmental energy consumption value can be apportioned between coal-fired and oil-fired units.

4.2 Thermal Pollution Control

Waste Heat Disposal

The environmental energy consumption for waste heat disposal in 1974 is calculated as 0.22 percent, from a determination of those power plants using closed-cycle cooling facilities in that year. The majority of plants providing the major share of steam-electric capacity employ once-through cooling using either fresh or saline water. There is an increasing trend away from once-through cooling toward the use of cooling ponds and cooling towers. The distribution by type of cooling facility, as a percent of the total installed capacity, is as follows:

Type of Cooling	Percent of 1974 Capacity	Percent of Plant Energy Use
Once-through	68	-
Cooling ponds	9	1.0
Spray ponds and semi-closed	4	1.3
Mechanical draft wet cooling towers	11	2.5
Natural draft wet cooling towers	8	3.0
	100	

This tabulation includes estimates of the additional energy required to operate the various closed cycle cooling facilities. Fuel is required 1) to operate the pump and/or fan components of the closed cycle system and 2) to compensate for the higher turbine backpressure resulting from the higher condenser temperature range.

The natural draft tower requires that water be pumped to the top of the packing. In the mechanical draft tower, in addition to pumping the water to the packing, power is required to run the fans which move the air through the tower. The amount of energy required varies for each mechanical draft tower due to its dependency on condenser design and climatic conditions. A condenser with a high flow rate and low temperature rise requires more pumping energy than a condenser with a lower flow rate and a higher rise for the same size plant. With adverse climatic conditions, more air is required, resulting in bigger fans requiring more energy.

The weighted average energy requirement, with respect to the fraction of the total installed capacity, is equal to 0.62 percent additional energy. Not all this additional energy consumption, however, can be considered as environmental energy consumption, since closed-cycle systems are also installed for economic reasons associated with water supply availability. Prior to the base year 1974, the majority of plants employing closed-cycle cooling systems had installed such systems due to the lack of a water supply adequate for once-through cooling. Assuming that 65 percent of the plants employing closed-cycle cooling systems had done so for economic reasons, then the weighted average energy requirement resulting from environmental considerations is 0.22 percent.

4.3 Particulate Control

The control of particulate emissions from fossil fuel electric utilities is only required for those plants burning either oil or coal, and is equal to 0.20 percent of the total energy input to those plants. Natural gas is a sufficiently clean fuel so that its combustion does not require control for particulate emissions. The control of particulate emissions in 1974 was primarily achieved by the application of either mechanical collectors, electrostatic precipitators, or a combination of the two. The distribution of particulate control equipment by fuel type for the sample plant population is summarized in Table 4-4. The characteristics of this sample are assumed to be representative of the industry with respect to particulate control.

TABLE 4-4

DISTRIBUTION OF PARTICULATE CONTROL EQUIPMENT BY FUEL TYPE FOR THE SAMPLE PLANT POPULATION

		Particulate Control Equipment (percent)				
Fuel Type	Percent of Sample	None	Mechanical Collector	Combination Mechanical-Electrostatic Precipitator	Electrostatic Precipitator	Wet Scrubber
Gas Burning	0.8	100.0	-	-	-	-
Oil Burning	12.6	40.7	38.8	-	20.5	-
Coal Burning	13.2	3.1	4.1	17.3	75.5	-
Gas & Oil	21.1	50.1	30.1	13.5	6.3	-
Gas & Oil	2.2	-	-	65.4	34.6	-
Oil & Coal	39.9	3.8	5.1	16.7	72.5	1.9
Gas, Oil, & Coal	10.2	4.7	15.4	-	79.9	-

As indicated in Table 4-4, oil-fired boilers primarily used mechanical collectors (principally multiple cyclones), and coal-fired boilers primarily used electrostatic precipitators for the control of particulates. Boilers which fired a combination of fuels typically used a combination mechanical and electrostatic precipitator or simply an electrostatic precipitator.

To determine the environmental energy consumption for particulate control, the following assumptions concerning control option requirements by fuel type were made:

- All coal-fired megawatts controlled by electrostatic precipitators
- Sixty percent of oil-fired megawatts controlled by multiple cyclones
- All gas-fired megawatts uncontrolled

The applicable energy requirements for these control options are negligible for multiple cyclones and 0.3 percent for electrostatic precipitators. The environmental energy consumption for the application of particulate controls is determined to be 0.2 percent of the energy input to fossil fuel power plants in 1974.

4.4 Other Environmental Control Areas

This section discusses other environmental control areas that have been evaluated but for which no significant energy consumption was determined. The areas involved are the control of nitrogen oxide emissions by the application of combustion modifications to reduce flame temperature and the control of waste water by the applications of water treatment facilities. For each of these control areas, the degree of application is reviewed for the base year period.

Nitrogen Oxides Control

The environmental energy consumption associated with the application of combustion modifications for the control of nitrogen oxides in 1974 is considered negligible due to the limited number of installations

employing this control option and the small energy consumption involved where it was applied. Of the power plants for which a response was obtained to our energy requirements questionnaire, only four plants were reported as using either flue gas recirculation or overfire air for the control of nitrogen oxides. For those installations for which the application of combustion modifications was reported, the energy consumption involved varied from 0.24 percent to 0.86 percent with an average of 0.47 percent.

Waste Water Pollution Control

The environmental energy consumption associated with the utilization of chemical waste water treatment facilities for the control of waste water pollution in 1974 is considered negligible due to the limited number of installations with extensive chemical waste water treatment facilities and the small energy consumption involved where such systems are utilized. Of the power plants responding to the ERT energy requirements questionnaire which reported energy requirements for chemical waste treatment facilities, the energy consumption involved varied from 0.00 percent to 0.06 percent.

5. METHODOLOGY

This section describes the general procedure for determining future estimates of energy consumption in the fossil fuel, steam electric generating industry. The discussion includes sources of data used to develop the results of this study as well as the method of estimating the expanding sample plant population in proportion to the national population in 1983. Since future projections focus on energy consumption due to sulfur oxide controls, additional discussion is devoted to the following topics: complying fuel sulfur values, oil to coal conversion, complying sulfur in fuel histograms and modeling of sulfur oxide control technologies.

5.1 Data Sources

The three sources of input data used to develop the results of this study and the areas where each has been used are as follows.

1) Discussion and evaluation of the literature values for the energy requirements of various control technologies is contained in Section 3 and references are given in the bibliography.

2) Diffusion modeling results (ERT, 1975) for a 100 plant sample were used to determine specific sulfur dioxide control requirements.

3) Federal Power Commission data for 89 plants out of the 100 plant sample* were supplemented by 66 completed plant sample questionnaires on process energy consumption and on present control technology practices. A summary of this data and a sample questionnaire form is contained in Appendix A.

---

*Originally it was intended that the two plant samples described above would be identical, at least insofar as the specific plants considered. This was not possible because of failure to get data for 11 plants. Even then the 89 plant sample is not a true subset of the 100 plant sample. The 89 plant sample is based on actual plant configurations for 1974. The 100 plant sample is based on projections to 1980 and differs because of factors such as additions or losses of units or changes in fuel type.

The 100 plant sample is the same as that in ERT Document P-1547B, "An Evaluation of Sulfur Oxide Control Requirements For Electric Power Plants", April 1975. Amplification of all the material discussed in this section can be found in that document. Selection of the sample and projection to 1980 was done by National Economic Research Associates, Inc. (NERA). EPA diffusion modeling results using the CRSTER model were used where available (76 plants). ERT modeled the remaining 24 plants using the EPA model CRS for flat terrain cases and the ERT CRSVAL model (which is based on the EPA CRSTER and Valley models) in cases of steep terrain.

Initially the sample was generated randomly from the national plant population. However, in order to use existing modeling results, substitutions were made for 44 plants. Replacements were made in a manner which attempted to maintain as nearly as possible the geographic region, size, and fuel type properties of the national population.

Neither the 100 plant or the 89 plant samples are totally representative of the national population. However, through expansion by appropriate factors as described in Section 5.2, the results are approximately representative of the national population. Both populations are large enough that they contain valid information on the range of operating configurations and environmental control technologies which would be found in the national population.

Table 5-1 lists the 100 plant sample stratified according to:

- fuel type
  - coal (C)
  - oil (O)
- region of the country
  - east coast states (E)
  - other high sulfate states (T)
  - rest of country (R)
- plant size
  - small (S), 400 megawatts or less
  - medium (M), 401 to 800 megawatts

- large (L), greater than 800 megawatts

A key to Table 5-1 follows the table.

The regions of the country used in the 100 plant sample were divided by EPA on the basis of sulfate measurements. "High sulfate" values are said to predominate in the measurements on the east coast and in the midwest, while the west is said to have generally lower sulfate concentrations. Figure 5-1 shows the geographic boundaries of those regions and presents the geographic distribution of the 100 plant sample.

Only plants which the Federal Energy Administration (FEA) deemed to be convertible, as well as those which actually burned some coal in 1974 and had boilers designed to burn coal, were placed in the coal-burning capacity category. All other plants were assumed to fire oil by 1980. Because of their limited number, discussion of oil-fired plants on the east coast and in other high sulfate states are combined on the same page of the table. The 44 plants classified as "urban" are within a ten-mile radius of a community with a population of greater than 50,000 persons.

5.2 Expansion to the National Population

The national population of fossil fuel, steam electric generating plants was taken from the NERA report, "The Costs of Reducing SO_2 Emissions from Electric Generating Plants", April 1975. Tables 5-2 and 5-3 taken from this report show the pre-1976 capacity and the 1976-1980 capacity added.

For consistency with our 100 plant sample we took the coal-oil plants to be coal fired. The NERA categories "East, High Sulfate" and "East, Other" are together identical to our category "East Coast". The NERA category "Remainder, High Sulfate" is identical to our category "Other High Sulfate" and the NERA categories "West Coast" and "Remainder, Other" are together identical to our category, "Rest of Country".

Table 5-4 presents the data used in expanding the 100 plant sample to the national population.

TABLE 5-1

DETAILS FOR 100 PLANT SAMPLE

POWER PLANT PARAMETERS; COAL PLANTS, EAST COAST*

	Plant No.	MW_{my}	Code	MW_{1980}	Fuel my C (10^3Ton)	Fuel my O (10^3BBL)	Fuel my G (10^6FT^3)	Fuel 1980	1980 BTU/ lb or/gal	S_{my}(%) C	S_{my}(%) O	S_{my}(%) G	% S 1980	Emission 1980 (gm/sec)	"C" Factor MY to 1980	Fuel Use 1980 (10^3Ton)
	Rural															
				S												
	15	345	C'72	345	1047.0	--	1324.61	C	11,861	1.14	--	0.0	1.14	1070.9	1.637	1637.2
(Total)				(345)												
				M												
	4	340	C'72	740	873.0	--	--	C	12,539	1.6	--	--	1.6	1682.5	2.176	1900.0
	14	533	C'71	533	1051.0	--	--	C	11,984	0.93	--	--	0.93	540.0	1.0	1051.0
	40	672	C'72	672	970.8	--	--	C	12,500	2.5	--	--	2.5	1393.0	1.746	970.8
(Total)				(1945)												
				L												
	5	1746	C'71	1746	3426.0	--	--	C	12,130	1.17	--	--	1.17	2246.8	1.0	3426.0
	17	3499	C'75	3499	10160.0	--	--	C	11,680	3.2	--	--	3.2	17768.1	1.0	10160.0
	34	728	C'72	1988	1298.0	--	--	C	12,467	1.7	--	--	1.7	3293.4	2.73	3544.9
(Total)				(7233)												
	Urban															
				S												
	51	100	C'74	100	65.0	--	--	C	12,500	1.6	--	--	1.6	59.3	1.0	65.0
	57	125	C'72	125	--	1211.6	--	C	12,500	--	0.3	--	1.0	157.62	4.57	274.8
	59	329	C'71	272	--	2714.2	544.0	C	12,500	--	0.3	0.0	0.3	69.55	1.20	404.0
	86	136	E'80	136	366.0	--	--	C	11,800	2.0	--	--	2.0	420.0	1.0	366.0
(Total)				(633)												
				M												
	56	491	C'72	491	1085.0	--	--	C	12,240	2.0	--	--	2.0	1185.8	9.3	1033.4
	58*	661	C'72	661	--	6603.0	--	C	12,500	--	0.6	--	0.5	429.6	1.13	1497.6
	77	418	E'80	418	396.0	1788.0	--	C	12,200	2.9	0.4	--	2.9	1399.0	1.92	840.7
	78	789	E'80	789	--	4204.4		C	12,500	--	1.0	--	1.0	572.8	1.41	998.3
	75	695	E'80	695	189.0	2522.0	--	C	12,500	1.0		--	1.0	436.6	1.24	761.0
(Total)				(3033)												
				L												
	41	1551	C'72	2351	2177.0	--	--	C	10,673	2.5	--	--	2.5	4788.6	13.855	3330.0
	60*	1827	C'72	1827	--	12903.7	5103.7	C	12,500	--	0.4	00	0.3	540.9	1.09	3142.4
(Total)				(4178)												

*A key to Table 5-1 follows the table.

TABLE 5-1 (continued)

POWER PLANT PARAMETERS; COAL PLANTS, OTHER HIGH SULFATE STATES

Plant No.	MW_{my}	Code	MW_{1980}	Fuel my C (10^3Ton)	Fuel my O (10^3BBL)	Fuel my G ($10^6 Ft^3$)	Fuel 1980	1980 BTU/ lb or/gal	S_{my} (%) C	S_{my} (%) O	S_{my} (%) G	% S 1980	Emission 1980 (gm/sec)	"C" Factor MY to 1980	Fuel Use 1980 (10^3Ton)
Rural															
			S												
12	176	C'71	176	468.3	--	--	C	10,515	2.4	--	--	2.4	614.23	1.6	468.3
13	263	C'71	263	657.0	--	--	C	11,276	3.13	--	--	3.13	1120.1	1.0	657.0
16	346	C'71	346	723.0	--	--	C	9,949	3.66	--	--	3.66	1462.9	1.0	723.0
88	142	E'80	142	371.8	--	--	C	12,000	1.33	--	--	1.3	277.3	1.0	371.8
90	268	E'80	268	547.0	--	--	C	12,000	2.16	--	--	2.16	677.7	1.0	547.0
93	80	E'80	80	292.0	--	--	C	12,000	2.16	--	--	2.16	361.9	1.0	292.0
97	292	E'80	292	794.0	--	--	C	12,000	1.3	--	--	1.3	591.4	1.0	794.0
(Total)			(1591)												
			M												
84	557	E'80	557	1117.7	--	--	C	11,000	3.0	--	--	3.0	1913.6	1.0	1117.7
91	640	E'80	640	1576.0	--	--	C	12,000	2.16	--	--	2.16	1953.2	1.0	1576.0
100	410	E'80	410	1494.0	--	--	C	11,203	2.0	--	--	2.0	1714.6	1.0	1494.0
(Total)			(1594)												
			I												
1	2558	C'71	2558	6094.2	--	--	C	10,145	4.11	--	--	4.11	13654.8	1.0	6094.2
2	1272	C'75	2082	3713.0	--	--	C	10,822	4.5	--	--	4.5	14897.5	1.63	6061.7
3	530	C'71	1787	1373.5	--	--	C	11,300	2.1	--	--	2.1	5502.9	3.325	4568.4
7	2441	C'74	2441	5672.0	--	--	C	11,206	1.5	--	--	1.5	3657.3	1.0	5672.0
8*	1633	C'71	1633	3266.0	--	--	C	11,217	3.7	--	--	3.7	6604.0	1.0	3266.0
9*	1100	C'71	1100	1972.3	--	--	C	11,042	3.18	--	--	3.18	3556.9	1.0	1972.3
10	1934	C'75	1934	5385.0	--	--	C	12,520	3.0	--	--	3.0	8828.7	1.0	5385.0
19	650	C'71	1450	1341.0	--	--	C	11,152	3.4	--	--	3.4	5543.1	2.23	2991.5
22*	1238	C'71	1846	2584.0	--	--	C	10,892	2.94	--	--	2.94	6145.5	1.5	3876.0
24	1086	C'71	1086	3122.0	--	--	C	10,956	3.93	--	--	3.93	6654.2	1.0	3122.0
53	1097	C'71	1097	2493.0	--	--	C	11,461	1.04	--	--	1.04	1502.8	1.0	2493.0
83	1700	E'80	1700	3077.0	--	--	C	10,271	2.45	--	--	2.45	4325.8	1.0	3077.0
(Total)			(20,714)												
Urban															
			S												
98	193	C'71	193	323.2	--	--	C	14,543	2.9	--	--	2.61	537.7	1.0	323.2
(Total)			(193)												
			M												
11*	511	C'71	511	1534.0	--	--	C	11,406	2.85	--	--	2.85	2347.4	1.0	1534.0
18	500	C'71	500	830.0	--	--	C	11,388	2.09	--	--	2.09	945.2	1.0	830.0
23	401	C'75	401	1149.0	--	--	C	10,663	3.3	--	--	3.3	2041.7	1.0	1149.0
95	615	C'71	615	1452.0	--	--	C	11,840	1.6	--	--	1.6	1333.0	1.0	1452.0
(Total)			(2027)												
			I												
6	1275	C'71	1275	2899.0	--	--	C	11,220	2.58	--	--	2.58	4119.2	1.0	2899.0
73	990	C'72	990	1375.0	--	15331.0	C	11,100	3.3	--	0.0	3.3	3985.1	1.607	2104.7
85	1580	E'80	1580	3285.0	--	--	C	11,000	3.8	--	--	3.8	3409.3	1.0	3285.0
(Total)			(3845)												

TABLE 5-1 (continued)

POWER PLANT PARAMETERS; OIL PLANTS, EAST COAST AND OTHER HIGH SULFATE STATES

	Plant No.	MW_{my}	Code	MW_{1980}	Fuel my C 10^3Ton	Fuel my O 10^3BBL	Fuel my G $10^6 FT^3$	Fuel 1980	1980 BTU/ lb or/gal	S_{my} (%) C	S_{my} (%) O	S_{my} (%) G	% S 1980	Emission 1980 (gm/sec)	"C" Factor MY to 1980	Fuel Use 1980 10^3Ton
	Rural															
				S												
	38	54	C'72	54	--	279.0	1963.0	0	135,000	--	2.2	0.0	2.2	136.77	2.35	108.35
	39	100	C'72	215	--	709.7	328.0	0	135,000	--	2.1	0.0	2.1	334.9	1.46	278.0
(Total)				(269)												
				M												
	45	740	C'72	740	--	4154.0	14153.0	0	135,000	--	1.0	0.0	1.0	654.7	1.696	1141.1
	49	559	C'72	559	--	4765.0	--	0	135,000	--	1.2	--	1.2	551.15	1.0	800.5
	89	1200	E'80	1200	--	14007.0	--	0	148,000	--	2.0	--	2.0	2700.4	1.0	2353.2
(Total)				(1871)												
				L												
	46	593	C'72	1029	--	4665.8	200.0	0	135,000	--	1.4	0.0	1.4	1101.3	1.776	1371.0
	47	543	C'72	1102	--	5335.0	--	0	135,000	--	0.85	--	0.85	1048.7	2.030	2030.9
	50	964	C'72	964	--	9757.0	--	0	135,000	--	2.1	--	2.1	1975.0	1.0	1639.1
	54*	805	C'72	805	--	4792.0	16560.0	0	135,000	--	1.4	0.0	1.4	1076.8	1.66	1340.5
	71	1211	C'72	1598	--	9940.0	--	0	135,000	--	2.4	0.0	2.4	3065.3	1.33	2226.0
(Total)				(5448)												
	Urban															
				S												
	36	87.5	C'71	119	--	141.1	3490.0	0	135,000	--	2.5	0.0	2.5	258.4	8.08	180.13
	37	132	C'72	132	--	1092.0	--	0	135,000	--	0.9	--	0.9	94.7	1.0	183.4
	61	81	C'74	81	--	228.9	1215.7	0	135,000	--	1.66	0.0	1.66	72.8	1.08	76.5
(Total)				(332)												
				M												
	42	760	C'72	760	--	7140.5	--	0	135,000	--	0.5	--	0.5	344.15	1.0	1199.6
	62	511	C'72	511	--	3445.2	3155.8	0	135,000	--	0.4	0.0	0.4	155.52	1.19	677.6
	74*	494	C'72	494	--	4265.0	2947.0	0	135,000	--	2.2	0.0	2.2	1021.0	1.147	808.0
	63	605	C'72	605	--	2063.4	17719.0	0	135,000	--	0.3	0.0	0.3	155.19	2.64	901.58
(Total)				(2370)												
				L												
	43	1255	C'72	1255	--	8453.0	26805.0	0	135,000	--	1.1	0.0	1.0	1426.0	1.59	2259.6
	44	595	C'75	1159	--	11338.0	--	0	135,000	--	0.7	--	0.7	1489.5	1.947	3708.6
	92	804	C'72	1564	--	4616.0	12152.0	0	135,000	--	1.3	0.0	1.3	1677.4	3.044	2248.9
(Total)				(3978)												

TABLE 5-1 (continued)
POWER PLANT PARAMETERS; COAL PLANTS, REST OF COUNTRY

	Plant No.	MW_{my}	Code	MW_{1980}	Fuel my C 10^3Ton	Fuel my O 10^3BBL	Fuel my G 10^6FT^3	Fuel 1980	1980 BTU/ lb or/gal	S_{my} (%) C	S_{my} (%) O	S_{my} (%) G	% S 1980	Emission 1980 (gm/sec)	"C" Factor MY to 1980	Fuel Use 1980 10^3Ton
	Rural															
				S												
	20	116	C'71	116	351.3	--	--	C	8,252	0.95	--	--	0.95	177.0	1.0	351.3
	21	325	C'72	325	524.3	--	10,737	C	9,395	4.1	--	0.0	4.1	2654.2	2.25	1128.3
	33	213	C'72	213	654.5	--	--	C	10,271	4.82	--	--	4.82	1723.9	1.0	654.5
(Total)				(654)												
				M												
	25	216	C'72	700	1407.0	--	--	C	6,683	0.7	--	--	0.7	1677.0	2.917	4103.8
	28	500	C'75	500	1927.0	--	--	C	8,500	0.9	--	--	0.9	947.8	1.0	1927.0
(Total)				(1200)												
				L												
	30	1546	C'75	1546	3791.0	--	--	C	12,000	1.4	--	--	1.4	3125.5	1.0	3791.0
	32	1771	C'71	1771	2137.8	--	--	C	12,008	2.6	--	--	2.6	2981.6	1.0	2137.8
	35	3013	C'75	3013	5701.3	--	--	C	11,260	1.1	--	--	1.1	3427.4	1.0	5701.3
	82*	2034	E'80	2034	6072.9	--	--	C	9,700	0.6	--	--	0.6	2090.7	1.0	6072.9
	96	1978	E'80	1978	3577.0	--	--	C	10,902	3.5	--	--	3.5	7183.7	1.0	3577.0
(Total)				(10342)												
	Urban															
				S												
	52	174	C'72	174	29.3	55.5	922.0	C	11,696	2.8	--	0.0	2.8	135.6	5.16	84.41
	81	138	E'80	138	240.2	--	--	C	12,000	1.8	--	--	1.8	248.1	1.0	240.2
(Total)				(312)												
				M												
	26	645	C'72	645	743.1	--	16,574	C	11,150	2.1	--	0.0	2.1	1842.0	2.16	1528.7
	27	598	C'71	598	1337.3	--	--	C	10,927	3.1	--	--	3.1	2265.3	1.0	1337.3
	29	464	C'71	464	461.8	--	16,616.6	C	10,722	2.31	--	0.0	2.31	1697.7	2.92	1280.9
(Total)				(1707)												
				L												
	31	801	C'72	801	1643.92	--	20,900.93	C	10,957	0.51	--	0.0	0.51	776.04	1.73	2652.0
(Total)				(801)												

TABLE 5-1 (continued)

POWER PLANT PARAMETERS; OIL PLANTS, REST OF COUNTRY

	Plant No.	MW_{my}	Code	MW_{1980}	Fuel my C 10^3Ton	Fuel my O 10^3BBL	Fuel my G 10^6FT^3	Fuel 1980	1980 BTU/ lb or/gal	S_{my} (%) C	S_{my} (%) O	S_{my} (%) G	% S 1980	Emission 1980 (gm/sec)	"C" Factor MY to 1980	Fuel Use 1980 10^3 Ton
	Rural															
				S												
	64	78	C'72	78	--	76.95	4190.6	0	135,000	--	3.88	0.0	3.88	322.6	11.23	144.2
	67 *	66	C'71	66	--	23.84	4009.2	0	135,000	--	1.6	0.0	1.6	118.95	32.5	129.57
	69	87	C'72	87	--	10.0	2880.0	0	135,000	--	0.9	0.0	0.9	47.45	55.83	91.89
(Total)				(231)												
				M												
	79 *	409	E'80	409	--	6200.0	--	0	135,000	--	0.4	--	0.4	239.06	2.5	1041.6
	68	177	C'71	647	--	65.27	7224.0	0	135,000	--	0.9	0.0	0.9	447.8	121.3	867.13
(Total)				(1056)												
				L												
	55	1328	C'71	1328	--	417.7	36437.4	0	135,000	--	0.2	0.0	0.2	139.0	19.15	1211.3
	87	900	E'80	900	--	5200.3	--	0	135,000	--	1.0	--	1.0	507.42	1.0	884.36
(Total)				(2228)												
	Urban															
				S												
	65	96	C'72	96	--	108.0	2199.0	0	135,000	--	0.4	0.0	0.4	19.97	4.87	87.01
	72	75	C'72	75	--	249.1	1020.0	0		--	0.2	0.0	0.2	8.49	0.484	74.02
	76	216	E'80	216	--	2272.0	--	0	135,000	--	1.0	--	1.0	218.96	1.0	381.62
	80	346	E'80	346	--	221.61	2940.0	0	153,808	--	0.4	0.0	0.4	27.09	3.168	118.05
(Total)				(733)												
				M												
	66	247	C'72	247	--	432.1	5738.0	0	135,000	--	0.4	0.0	0.4	57.9	3.576	252.3
	70	714	C'72	714	--	2763.0	23572.0	0	135,000	--	0.4	0.0	0.4	276.0	2.427	1202.4
(Total)				(961)												
				L												
	48	331	C'72	910	--	1744.4	7221.0	0	135,000	--	0.2	0.0	0.2	163.85	4.82	1427.1
	94 *	860	E'80	860	--	6769.0	--	0	148,000	--	1.5	--	1.5	978.72.	1.0	1137.2
	99	1339	E'80	1339	--	7256.0	--	0	145,000	--	0.5	--	0.5	349.7	1.0	1219.0
(Total)				(3109)												

KEY TO TABLE 5-1

No.	-	Code number for each plant.
MW_{my}	-	Plant capacity, in megawatts, corresponding to the model year status of the plants for which the diffusion model run was based.
Code	-	Indicates basic data source for MW_{my} and some of the remaining columns; the indicated number refers to model year. The two data sources were EPA-AQCR Reports, denoted by "C", and utility companies, denoted by "E".
MW_{1980}	-	Plant capacity, in megawatts, corresponding to projected 1980 plant status. Headings "S", "M", and "L" represent 1980 plant capacity ranges: small (less than 400 mw), medium (401 to 800 mw) and large (greater than 800 mw).
$Fuel_{my}$	-	Total fuel consumption of plant in the model year, by fuel type: C = coal (in 10^3 tons), O = oil (in 10^3 barrels) and G = gas (in 10^6 cubic feet).
$Fuel_{1980}$ (coal)	-	Fuel type assumed by NERA for the year 1980; either C (coal) or O (oil).
1980 BTU/lb or BTU/gal	-	Fuel heat value for the year 1980. Based upon present fuel heat value or best estimate of 1980 fuel.
$S_{my}(\%)$		Percent sulfur content of fuels used in model year, by fuel type designation employed in $Fuel_{my}$ column.
$S_{1980}(\%)$	-	Percent average sulfur content corresponding to the model year emission rate and concentration values when these are altered to account for changes in fuel type and capacity between the model year and 1980. For almost all plants, a value equal to the $S_{my}(\%)$ was assumed.
Emission 1980	-	Plant total stack average SO_2 emission rate based upon the product of 1980 total fuel consumption and percent average sulfur content of 1980 fuel.
"C" Factor	-	Scale factor by which the concentrations obtained from the diffusion models are adjusted to correspond to different conditions of fuel consumption or fuel sulfur content than those used in diffusion model run.

The values from $S_{my}\%$ in the table are of little direct value because this study will impose its own regulatory scenarios concerning sulfur fuel content.

Some minor differences can be found between Table 5-1 and the corresponding table in ERT Document P-1547B. In all cases the changes are consistent with the assumptions used in the actual diffusion modeling.

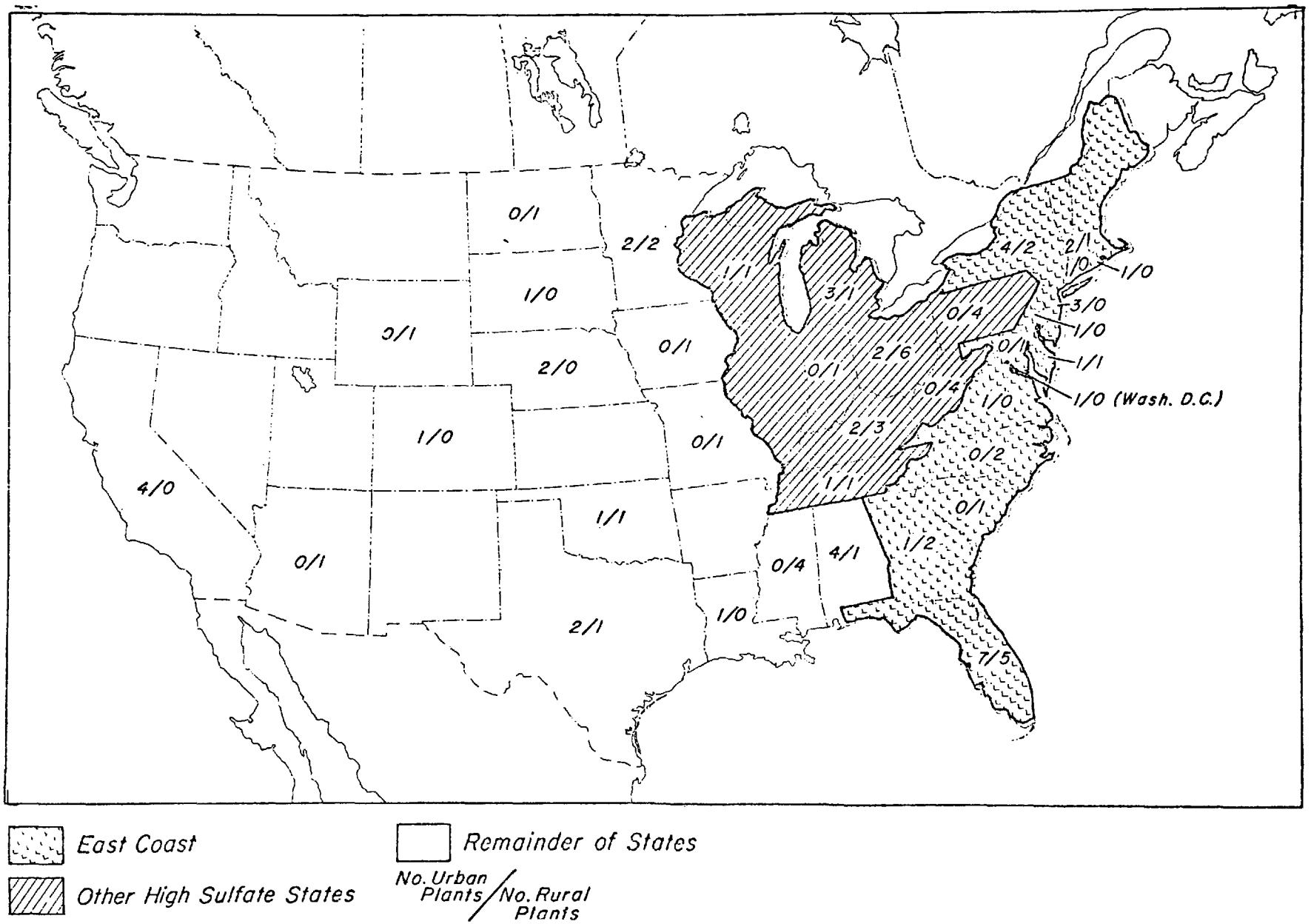

Figure 5-1 Locations of the 100 Power Plants in the Study.

TABLE 5-2

DISTRIBUTION OF TOTAL COAL- AND OIL-FIRED GENERATING CAPACITY BY REGION SIZE AND FUEL TYPE

Pre-1976 Capacity†

Region/Size	Coal		Coal-Oil*		Oil		Total	
	Number of Plants	Pre-1976 Capacity (Mw)	Number of Plants	Pre-1976 Capacity (Mw)	Number of Plants	Pre-1976 Capacity (Mw)	Number of Plants	Pre-1976 Capacity (Mw)
1. East, High Sulfate	32	13,528	50	32,172	50	20,601	132	66,301
400 Mw and Under	16	2,456	20	5,007	30	4,983	66	12,446
401 - 800 Mw	12	6,799	13	6,820	13	7,697	38	21,316
Over 900 Mw	4	4,273	17	20,345	7	7,921	28	32,539
1. East, Other	24	14,286	5	2,091	40	12,731	69	29,108
400 Mw and Under	12	2,508	2	479	24	3,561	38	6,548
401 - 800 Mw	5	2,138	1	445	6	3,079	12	5,662
Over 800 Mw	7	9,640	2	1,167	10	7,091	19	16,898
3. West Coast	2	1,400	0	-	35	22,194	37	23,594
400 Mw and Under	0	-	0		18	2,798	18	2,798
401 - 800 Mw	1	-	0		5	2,735	6	2,735
Over 800 Mw	1	1,400	0		12	16,661	13	18,061
2. Remainder, High Sulfate	173	109,916	19	10,949	15	2,358	207	123,223
400 Mw and Under	75	12,836	10	2,081	12	2,098	97	17,015
401 - 800 Mw	41	19,234	3	1,819	2	260	46	21,313
Over 800 Mw	57	77,846	6	7,049	1	0	64	84,895
3. Remainder, Other	99	37,115	29	8,353	144	59,077	272	104,545
400 Mw and Under	38	4,518	20	3,010	88	13,015	146	20,543
401 - 800 Mw	25	6,636	5	2,540	31	16,699	61	25,875
Over 800 Mw	36	25,961	4	2,803	25	29,363	65	58,127
Total-All Regions	330	176,245	103	53,564	284	116,961	717	346,770
400 Mw and Under	141	22,318	52	10,577	172	26,455	365	59,350
400 - 800 Mw	84	34,807	22	11,624	57	30,470	163	76,901
Over 800 Mw	105	119,120	29	31,363	55	60,037	189	210,520

†Items may not add to total due to rounding.

*Plants defined by the National Coal Association as coal-oil or coal-oil-gas and using some coal in 1974; or oil-fired capacity defined by the Federal Energy Administration as convertible to coal.

Source: Analysis of NERA computer files.

TABLE 5-3

DISTRIBUTION OF TOTAL COAL- AND OIL-FIRED GENERATING CAPACITY BY REGION SIZE AND FUEL TYPE

Capacity Added 1976-1980†

Region/Size	Coal		Coal-Oil*		Oil		Total	
	Number of Plants	1976-1980 Capacity Added (Mw)	Number of Plants	1976-1980 Capacity Added (Mw)	Number of Plants	1976-1980 Capacity Added (Mw)	Number of Plants	1976-1980 Capacity Added (Mw)
1. East, High Sulfate	32	850	50	3,808	50	1,242	132	5,900
400 Mw and Under	16	-	20	126	30	-	66	126
401 - 800 Mw	12	-	13	400	13		38	400
Over 900 Mw	4	850	17	3,282	7	1,242	28	5,374
1. East, Other	24	2,074	5	1,792	40	5,096	69	8,962
400 Mw and Under	12		2		24	399	38	399
401 - 800 Mw	5	798	1		6	553	12	1,351
Over 800 Mw	7	1,276	2	1,792	10	4,144	19	7,212
3. West Coast	2	500	0		35	292	37	792
400 Mw and Under	0		0		18	-	18	
401 800 Mw	1	500	0		5		6	500
Over 800 Mw	1	-	0		12	292	13	292
2. Remainder, High Sulfate	173	15,058	19	1,890	44	3,792	236	20,740
400 Mw and Under	75	852	10	60	12	42	97	954
401 800 Mw	41	3,858	3		2	1,250	46	4,608
Over 800 Mw	57	10,849	6	1,830	1	2,500	64	15,179
3. Remainder, Other	99	35,730	29	2,753	161	5,296	289	43,779
400 Mw and Under	38	1,225	20	400	88	455	146	2,080
401 - 800 Mw	25	7,731	5	233	30	1,316	60	9,280
Over 800 Mw	36	26,774	4	2,120	25	3,525	65	32,419
Total-All Regions	330	54,213	103	10,244	284	15,718	717	80,175
400 Mw and Under	141	2,077	52	586	172	896	365	3,559
400 - 800 Mw	84	12,387	22	633	57	3,119	163	16,139
Over 800 Mw	105	39,749	29	9,025	55	11,702	189	60,476

†Items may not add to total due to rounding.

*Plants defined by the National Coal Association as coal-oil or coal-oil-gas and using some coal in 1974; or oil-fired capacity defined by the Federal Energy Administration as convertible to coal.

Source: Analysis of NERA computer files.

TABLE 5-4

MEGAWATT VALUES USED IN DERIVING EXPANSION FACTORS

	100 Plant (MW)	100 Plant (%)	NERA Pre-1976 (MW)	Pre-1976 (%)	NERA 1976-80 (MW)	1976-80 (%)
CBS	978.	01.1	10450.	03.0	126.	00.2
CEM	4999.	05.8	16202.	04.7	1198.	01.5
CEL	11411.	13.3	35425.	10.2	7200.	09.0
CTS	1760.	02.1	14917.	04.3	912.	01.1
CTM	3634.	04.2	21053.	06.1	3358.	04.2
CTL	24559.	28.7	84895.	24.5	12679.	15.8
CRS	966.	01.1	7528.	02.2	1625.	02.0
CRM	2907.	03.4	9176.	02.6	8464.	10.6
CRL	11143.	13.0	30164.	08.7	28894.	36.0
OES	601.	00.7	10676.	03.1	441.	00.6
OEM	3669.	04.3	11036.	03.2	1803.	02.2
OEL	10676.	12.5	14012.	04.0	7886.	09.8
ORS	1211.	01.4	15813.	04.6	455.	00.6
ORM	1770.	02.1	19434.	05.6	1316.	01.6
ORL	5337.	06.2	46024.	13.3	3817.	04.8
SUM	85621.	100.0	346805.	100.0	80174.	100.0

KEY

Combinations of the following: for example, CES = coal fired, eastern U.S., small plant.

C - coal
O - oil
E - eastern
T - other high sulfate areas
R - rest of country
S - small plants
M - medium plants
L - large plants

Expansion of our sample population to the national population was carried out separately for each element of our three-region, two-fuel-type, and three-capacity range stratification. However, as noted previously, oil plants in the east coast, west and in other high sulfate states were combined so that a total of 15 categories resulted. That is, the east coast coal fired plants of less than 400 megawatts (CES) in our sample were taken to be representative of the national population of such plants and so on.

Separate expansions were made for the pre-1976 NERA population and the 1976-1980 capacity additions. In this way we attempted to maintain trends in size, location, or fuel type which would distinguish new plants from the existing population.

Table 5-4 shows 80,174 megawatts as added to the pre-1976 capacity of 346,805 between 1976 and 1980. This corresponds to a capacity growth rate of 4.16 percent per year. This is one of the growth rates used in the calculations. However, we have used a method which permits other growth rate assumptions to be used as well as permitting calculations for various model years. This consists of normalizing each of our 15 categories relative to the total population for the model year in question. For example, from Table 5-4 it is seen that Coal, East Coast, Small (CES) comprises 3.0 percent of the pre-1976 population and 0.2 percent of the 1976-1980 population. Thus with a growth rate α (4.16 percent) as a fraction per year we take the percentage in model year t to be:

$$(\text{CES}) = \frac{3 + (e^{\alpha t} - 1)\ .2}{e^{\alpha t}}$$

For 1983 (t = 8 years), the percentage of CES is therefore calculated as 2.2 percent of the total power plant population.

All megawatts falling into this category in model year t are assumed to have the control system requirements of the sample population. The following sections begin the discussion of how control system requirements are determined.

5.3 Regulatory Scenarios for Sulfur Oxides

The energy consumed for sulfur oxide control at any plant is calculated on the basis of fuel type, geographic region, available and permissible control technologies, and regulatory requirements. This section describes how the regulatory requirements are analyzed. The other factors listed above are discussed in subsequent sections.

The first step is the determination of complying fuel sulfur values, these are the highest sulfur content fuel that each of the 100 plants can fire and meet regulatory requirements. The requirements which determine complying fuel sulfur values are based on the following sulfur oxide regulatory scenarios:

Primary National Ambient Air Quality Standards (PAQS)

The fuel sulfur content required in order for the 24-hour standard of 365 $\mu g/m^3$ to be reached exactly once per year is obtained from the diffusion modeling completed in "An Evaluation of Sulfur Oxide Control Requirements for Electric Power Plants", (ERT, 1975). The description of the diffusion modeling and the methods used for these calculations are fully described in that ERT report. The primary standard for an annual averaging time is not considered because it is not considered controlling for major point sources.

Air Quality Standards (AQS)

This air quality goal is defined to include both primary and secondary national ambient air quality standards. The diffusion model results from ERT's report P-1547 were used to determine the fuel sulfur content for compliance with the 3-hour secondary SO_2 standard (1,300 $\mu g/m^3$), not to be exceeded more than once per year. The complying fuel for AQS is the lower fuel sulfur content required to meet the 3-hour or the 24-hour standard.

New Source Performance Standards (NSPS)

This requirement applies only to new plants. The emission limits of 1.2 lbs SO_2 per million Btu heat input for coal and 0.8 lbs SO_2 per

million Btu heat input for oil were converted to percent sulfur in fuel values by using the 1980 fuel heating values listed in Table 5-1.

State Implementation Plans (SIP)

The requirements for complying fuel sulfur values in the State Implementation Plans for each of the 100 plants in the sample were obtained using the fuel heating values in Table 5-1 in conjunction with a computer file of emission limits maintained by EPA. The values obtained were current as of March 13, 1975.

Non-Deterioration Class II Increments (ND)

Only new plants are required to meet non-deterioration requirements. The complying fuel sulfur value is the more stringent of those necessary to meet the 3-hour (700 $\mu g/m^3$) increment or the 24-hour (100 $\mu g/m^3$) increment as described in the Federal Register of December 16, 1974.*

The Class II Nondeterioration increments to existing background are calculated from the modeling results for air quality standards (AQS).

For example, for 3-hour concentration values, we use the formula:

$$S^3_{ND} = \frac{700}{1500 - C_B} \quad S^3_{AQS},$$

where S^3_{ND} and S^3_{AQS} are the complying fuel sulfur values for Class II non-deterioration requirements and air quality standards based on 3-hour averaging times. C_B is the 3-hour background concentration value for the plant in question.

Background values for each of the 100 plants in the sample were derived from EPA-summarized data for each of the Air Quality Control Regions (AQCR) in which a plant was situated. On a line representing

*Class I permitted increments have not been considered in the modeling analysis. In addition, the U. S. Congress in both the House and Senate have ND sections in the 1977 Clean Air Act Amendments which would affect the classes and increments to be allowed for ND. However, the modeled values are consistent with present regulations may provide an approximation of the effects of the proposed legislation.

the distribution of 24-hour averages at a monitoring site, the 80th percentile was chosen as the background concentration for urban areas and the 60th for rural areas. The same procedure was followed to derive 3-hour average background concentrations.

Best Available Control Technology (BACT)

This regulatory scenario presupposes that the BACT requirement will be imposed as of January 1980. The control systems that might require it have been defined here for example purposes as:

- All new units install scrubbers.
- Half of all oil used is desulfurized.
- Half of all coal is washed.

Table 5-5 summarizes the regulatory scenarios for sulfur oxide control. Scenarios 1 through 5 are presently in the regulatory structure and constitute a subset which will be called All Present Regulations (APR).

TABLE 5-5

SULFUR OXIDE REGULATORY SCENARIOS*

1. 24-hour primary National Ambient Air Quality Standard (PAQS).
2. 24-hour primary National Air Quality Standard and 3-hour secondary National Ambient Air Quality Standard (AQS).
3. New Source Performance Standards (NSPS).
4. State Implementation Plans (SIP).
5. Non-Deterioration Class II permitted increments (ND).
6. Best Available Control Technology (BACT).

*Scenarios 1 through 5 constitute All Present Regulations (APR).

5.4 Oil to Coal Conversion

Complying fuel sulfur values for all regulations under the model assumption that oil plants in the sample convert to coal can be calculated directly given the oil and coal heating values. (It should be recalled that new source performance standards specify different emission limits for coal and oil plants). The oil heating values are the 1980 values listed in Table 5-1. The coal heating values are based on a state by state analysis of present properties as obtained from (NCA, 1974). The ratios of coal to oil heating values for the plants in the 100 plant sample are shown in Table 5-6.

Complying fuel sulfur values for all regulations and with and without coal conversion are shown in Table 5-7. The "with conversion to coal" column lists only the altered values when oil-fired plants switch to coal. The sulfur fuel values are given as the highest percentage sulfur content which meet with the indicated regulatory scenario for that plant.

The last regulatory scenario, BACT, has not been included because it implies control without regard to fuel sulfur values or ambient air quality. Where the value 99.00 occurs in the State Implementation Plan (SIP) column, it means that it was not possible to express the SIP for that state in terms of complying sulfur fuel values.

5.5 Complying Fuel Histograms

For a set of sulfur dioxide control regulations and given assumptions about coal conversion, each plant in the sample has a complying fuel sulfur content associated with it. This is the highest sulfur fuel the plant can burn and meet all regulatory requirements.

This plant-by-plant data is used to compile a complying fuel histogram by sulfur content range for each geographic region and for each size stratification. The complying fuel histogram gives the fraction of the megawatts being considered which require fuel in various sulfur content ranges. The breakdown into complying sulfur in fuel ranges is made because control technology and hence energy requirements can be determined from the fuel range.

TABLE 5-6

RATIO OF COAL TO OIL HEATING VALUES

Plant #	State	Ratio
36	CA	0.64357
37	R.I.	0.73727
38	FLA	0.62165
39	FLA	0.62165
42	MASS	0.64771
43	FLA	0.62165
44	FLA	0.62165
45	FLA	0.62165
46	FLA	0.62165
47	MASS	0.64771
48	CALIF	0.41312
49	FLA	0.62165
50	FLA	0.62165
54	FLA	0.62165
55	MISS	0.66372
61	FLA	0.62165
62	NY	0.67181
63	NY	0.67181
64	MISS	0.66372
65	CALIF	0.41312
66	CALIF	0.41312
67	MISS	0.66372
68	MISS	0.66372
69	ARIZ	0.57674
70	CALIF	0.41312
71	NY	0.67181
72	SD	0.43165
74	FLA	0.62165
76	OKLA	0.66612
79	TX	0.38556
80	TX	0.38556
87	OKLA	0.66612
89	NY	0.67181
92	FLA	0.62165
94	LA	0.38158
99	TX	0.38556

TABLE 5-7

COMPLYING FUEL SULFUR VALUE

NUMBER	LOCATION	FUEL TYPE	MW	AQS	BIP	NO	NSP	PAQS	AQS	BIP	NO	NSP	PAQS
				WITHOUT CONVERSION TO COAL					WITH CONVERSION TO COAL				
12			176	9.24	99.00	3.54	0.63	9.24	0.0	0.0	0.0	0.0	0.0
13			263	2.74	1.11	0.99	0.68	3.36	0.0	0.0	0.0	0.0	0.0
16			346	6.03	99.00	2.29	0.60	7.47	0.0	0.0	0.0	0.0	0.0
88			142	0.25	1.92	0.12	0.72	0.40	0.0	0.0	0.0	0.0	0.0
90			268	1.21	2.40	0.52	0.72	1.78	0.0	0.0	0.0	0.0	0.0
93			80	2.53	0.90	1.16	0.72	0.62	0.0	0.0	0.0	0.0	0.0
97			292	0.06	1.92	0.02	0.72	0.06	0.0	0.0	0.0	0.0	0.0
84			557	17.63	0.55	6.77	0.66	17.67	0.0	0.0	0.0	0.0	0.0
91			640	0.73	2.40	0.34	0.72	1.06	0.0	0.0	0.0	0.0	0.0
100			410	0.61	2.24	0.30	0.67	1.01	0.0	0.0	0.0	0.0	0.0
1			2558	1.95	1.01	0.85	0.61	2.87	0.0	0.0	0.0	0.0	0.0
2			2082	1.39	0.54	0.76	0.65	2.40	0.0	0.0	0.0	0.0	0.0
3			1767	1.91	1.50	0.61	0.68	1.98	0.0	0.0	0.0	0.0	0.0
7			2441	1.03	0.53	0.44	0.67	1.44	0.0	0.0	0.0	0.0	0.0
8		T	1633	7.56	1.51	4.49	0.67	12.22	0.0	0.0	0.0	0.0	0.0
9			1100	0.97	0.66	0.31	0.66	0.97	0.0	0.0	0.0	0.0	0.0
10			1934	2.60	1.93	1.54	0.75	3.83	0.0	0.0	0.0	0.0	0.0
19			1450	2.46	1.50	0.97	0.70	3.26	0.0	0.0	0.0	0.0	0.0
22			1846	2.98	0.46	1.14	0.65	2.98	0.0	0.0	0.0	0.0	0.0
24			1086	2.23	0.55	1.07	0.66	3.38	0.0	0.0	0.0	0.0	0.0
53			1097	9.02	1.95	3.92	0.69	12.84	0.0	0.0	0.0	0.0	0.0
83			1700	4.59	99.00	1.98	0.62	6.58	0.0	0.0	0.0	0.0	0.0
98			193	4.16	0.58	2.63	0.69	4.16	0.0	0.0	0.0	0.0	0.0
11			511	2.43	1.50	0.91	0.68	3.00	0.0	0.0	0.0	0.0	0.0
18			500	3.20	99.00	1.11	0.68	3.20	0.0	0.0	0.0	0.0	0.0
23			401	2.96	1.08	1.30	0.64	3.10	0.0	0.0	0.0	0.0	0.0
95			615	1.59	1.50	0.49	0.71	1.59	0.0	0.0	0.0	0.0	0.0
6			1275	1.61	0.58	1.02	0.67	1.61	0.0	0.0	0.0	0.0	0.0
73			990	1.85	2.22	0.80	0.67	2.46	0.0	0.0	0.0	0.0	0.0
85			1580	4.04	0.66	1.67	0.66	4.04	0.0	0.0	0.0	0.0	0.0
15			345	1.00	1.36	0.28	0.71	1.00	0.0	0.0	0.0	0.0	0.0
4			740	1.65	0.50	0.69	0.75	2.39	0.0	0.0	0.0	0.0	0.0
14		C	533	1.31	1.39	0.49	0.72	1.67	0.0	0.0	0.0	0.0	0.0
40			672	3.79	1.99	1.81	0.75	5.66	0.0	0.0	0.0	0.0	0.0
5			1746	1.13	3.00	0.47	0.73	1.66	0.0	0.0	0.0	0.0	0.0
17			3499	2.07	3.00	0.81	0.70	2.71	0.0	0.0	0.0	0.0	0.0
34			1988	1.35	1.00	0.58	0.75	1.86	0.0	0.0	0.0	0.0	0.0
51			100	12.90	1.64	4.59	0.75	15.97	0.0	0.0	0.0	0.0	0.0
57		E	125	9.22	99.00	3.48	0.75	9.22	0.0	0.0	0.0	0.0	0.0
59			272	3.28	0.30	1.24	0.75	3.28	0.0	0.0	0.0	0.0	0.0
86			136	0.91	0.65	0.30	0.71	0.91	0.0	0.0	0.0	0.0	0.0
56			491	2.12	0.20	0.65	0.73	2.12	0.0	0.0	0.0	0.0	0.0
58			661	2.82	0.50	0.94	0.75	2.82	0.0	0.0	0.0	0.0	0.0
77			418	2.41	0.40	0.96	0.73	2.41	0.0	0.0	0.0	0.0	0.0
78			789	2.14	1.00	0.79	0.75	2.14	0.0	0.0	0.0	0.0	0.0
75			695	3.85	1.00	1.52	0.75	3.85	0.0	0.0	0.0	0.0	0.0
41			2351	0.96	0.30	0.45	0.64	1.19	0.0	0.0	0.0	0.0	0.0
60			1827	3.29	0.30	1.36	0.75	3.61	0.0	0.0	0.0	0.0	0.0
20			116	0.66	2.00	0.19	0.49	0.66	0.0	0.0	0.0	0.0	0.0
21			325	1.00	2.82	0.28	0.56	1.00	0.0	0.0	0.0	0.0	0.0
33			213	4.26	0.33	2.09	0.62	7.21	0.0	0.0	0.0	0.0	0.0
25			700	0.72	1.00	0.21	0.40	0.72	0.0	0.0	0.0	0.0	0.0
28			500	4.94	2.00	1.62	0.51	5.44	0.0	0.0	0.0	0.0	0.0
30			1586	4.19	2.40	1.26	0.72	4.37	0.0	0.0	0.0	0.0	0.0
32		R	1771	2.35	1.10	0.86	0.72	3.02	0.0	0.0	0.0	0.0	0.0
35			3013	5.23	2.30	1.89	0.68	6.52	0.0	0.0	0.0	0.0	0.0
82			2034	0.23	99.00	0.12	0.58	0.43	0.0	0.0	0.0	0.0	0.0
96			1978	0.61	1.00	0.27	0.65	0.93	0.0	0.0	0.0	0.0	0.0
52			174	1.55	1.46	0.45	0.70	1.55	0.0	0.0	0.0	0.0	0.0
81			138	10.04	2.40	3.02	0.72	10.04	0.0	0.0	0.0	0.0	0.0
26			645	0.60	1.39	0.18	0.67	0.60	0.0	0.0	0.0	0.0	0.0
27			598	13.45	1.50	6.20	0.66	17.71	0.0	0.0	0.0	0.0	0.0
29			464	0.76	1.50	0.27	0.64	0.76	0.0	0.0	0.0	0.0	0.0
31			801	1.71	99.00	0.84	0.66	2.88	0.0	0.0	0.0	0.0	0.0
38			58	2.11	0.90	0.67	0.67	2.11	1.31	0.76	0.42	0.63	1.31
39			215	2.99	0.90	1.21	0.67	3.78	1.86	0.76	0.75	0.63	2.35
45			740	2.54	0.90	0.91	0.67	2.86	1.58	0.76	0.57	0.63	1.78
49			559	7.01	0.90	2.65	0.67	8.27	4.36	0.76	1.64	0.63	5.14
89			1200	0.22	1.00	0.09	0.74	0.27	0.15	1.13	0.06	0.75	0.18
46			1029	4.00	0.90	1.68	0.67	5.13	2.49	0.76	1.05	0.63	3.19
47			1102	4.21	0.90	1.20	0.67	4.21	2.73	0.58	0.78	0.66	2.73
50			964	10.16	0.90	4.41	0.67	13.61	6.32	0.76	2.74	0.63	8.58
54		E+T	805	4.28	0.90	1.58	0.67	4.83	2.66	0.76	0.98	0.63	3.00
71			1598	3.94	1.00	1.83	0.67	5.21	2.65	0.67	1.23	0.68	3.50
36			119	1.34	3.00	0.46	0.67	1.53	0.86	1.93	0.29	0.65	0.98
37			132	3.60	0.45	1.89	0.67	3.60	2.65	0.33	1.39	0.75	2.65
61			81	18.79	0.90	8.66	0.67	24.65	11.68	0.76	5.38	0.63	15.32
42			760	2.28	0.45	1.05	0.67	2.98	1.46	0.29	0.68	0.66	1.48
62		O	511	4.02	0.30	1.89	0.67	5.02	2.70	0.20	1.27	0.68	3.37
74			494	4.40	0.90	1.74	0.67	4.97	2.74	0.76	1.08	0.65	3.09
63			605	3.55	0.30	1.14	0.67	3.55	2.38	0.20	0.90	0.68	2.38
43			1255	1.74	0.90	0.92	0.67	2.63	1.08	0.76	0.57	0.61	1.63
44			1159	1.05	0.90	0.48	0.67	1.36	0.65	0.76	0.30	0.63	0.85
92			1564	2.53	0.90	0.98	0.74	3.32	1.57	0.76	0.72	0.63	2.06
64			78	4.04	3.90	1.20	0.67	4.24	2.68	2.59	0.80	0.67	2.81
67			66	0.67	3.90	0.19	0.67	0.67	0.44	2.59	0.13	0.67	0.44
69			87	1.59	1.80	0.50	0.67	1.82	0.92	1.04	0.29	0.58	1.05
79			809	2.59	99.00	0.73	0.67	2.59	1.00	99.00	0.28	0.59	1.00
66			647	0.09	3.90	0.03	0.67	0.09	0.06	2.59	0.02	0.67	0.06
55			1328	0.12	3.90	0.04	0.67	0.13	0.08	2.59	0.02	0.67	0.09
87			900	6.30	99.00	2.13	0.67	7.65	4.20	99.00	1.42	0.67	5.10
65		R	96	0.65	0.50	0.23	0.67	0.75	0.27	0.21	0.10	0.42	0.31
72			75	0.54	2.40	0.16	0.67	0.54	0.23	1.04	0.07	0.44	0.23
76			216	1.92	99.00	0.54	0.67	1.92	1.28	99.00	0.36	0.67	1.28
80			346	8.42	99.00	2.37	0.77	8.42	3.25	99.00	0.92	0.44	3.25
96			247	0.98	0.50	0.30	0.67	0.98	0.40	0.21	0.13	0.42	0.40
70			714	0.80	0.50	0.30	0.67	0.95	0.33	0.21	0.12	0.42	0.39
88			910	0.20	0.50	0.11	0.67	0.16	0.08	0.21	0.05	0.42	0.15
94			866	3.00	99.00	0.98	0.74	3.00	1.14	99.00	0.37	0.42	1.14
99			1319	2.06	99.00	0.66	0.73	2.33	0.79	99.00	0.25	0.42	0.90

E=East Coast, R=Rest of Country, T=Other "High Sulfate"
O=Oil, C=Coal

The ranges of sulfur fuel percentages which have been used are: 0.1-0.316, 0.316-1.0, 1.0-3.16, 3.16-10.0. The dividing points between various fuel ranges are related by powers of $\sqrt{10} = 3.16$. This division is convenient in that it corresponds to the break points for SO_2 control technology and has a logical construction. In addition when plotted on a logarithmic scale the width of each element in the complying fuel histogram is then constant.

An example helps make these ideas clear. Assume that all plants need only meet primary and secondary national ambient air quality standards (see Scenario 2, AQS) and further assume no plants are converted to coal, then, using the data in Table 5-7, the megawatts in the sample calculation can be arranged by complying fuel range as shown in Table 5-8.

The complying fuel histogram for this case is shown in Figure 5-2 together with the histograms for the old and new plant populations that result when each element of Table 5-8 is expanded as discussed in Section 5.2. Figure 5-2 also shows the complying fuel histogram that results when old and new plant histograms are combined, in this case with an assumed growth rate of 4.16 percent per year between the end of the base year 1974 and the end of 1983.

For simplicity, Figure 5-2 does not indicate any distinction in fuel type. In actually performing calculations such a distinction is maintained. Figure 5-3 shows the 1983 complying fuel histogram with the contributions of oil (o) and coal (c) fired megawatts identified.

The complying fuel histogram for future years (in this case 1983) forms the basis for our analysis of sulfur oxide control technologies and their associated energy consumption.

TABLE 5-8

BREAKDOWN OF MEGAWATTS IN THE 100 PLANT SAMPLE BY COMPLYING FUEL RANGE FOR AIR QUALITY STANDARDS WITH MINIMUM COAL CONVERSION

Fuel/Area	Sulfur Content Range (percent) 0.1-0.316	0.316-1.0	1.0-3.16	3.16-10.0
I. Coal				
East Coast				
S	0	481	0	497
M	0	0	3,632	1,367
L	0	2,351	7,233	1,827
Other High Sulfate Areas				
S	434	0	611	715
M	0	1,050	1,527	1,057
L	0	1,100	17,449	6,010
Rest of Country				
S	0	441	174	351
M	0	1,809	0	1,098
L	2,034	1,978	2,572	4,559
II. Oil				
East Coast and Other High Sulfate Areas				
S	0	0	388	213
M	0	0	1,500	2,169
L	1,200	0	3,978	5,498
Rest of Country				
S	0	484	303	424
M	647	714	409	0
L	2,238	0	2,199	900
III. Total (MW)	6,553	10,408	41,975	26,685
90	7.65	12.16	49.02	31.17

Key: S - small
M - medium
L - large

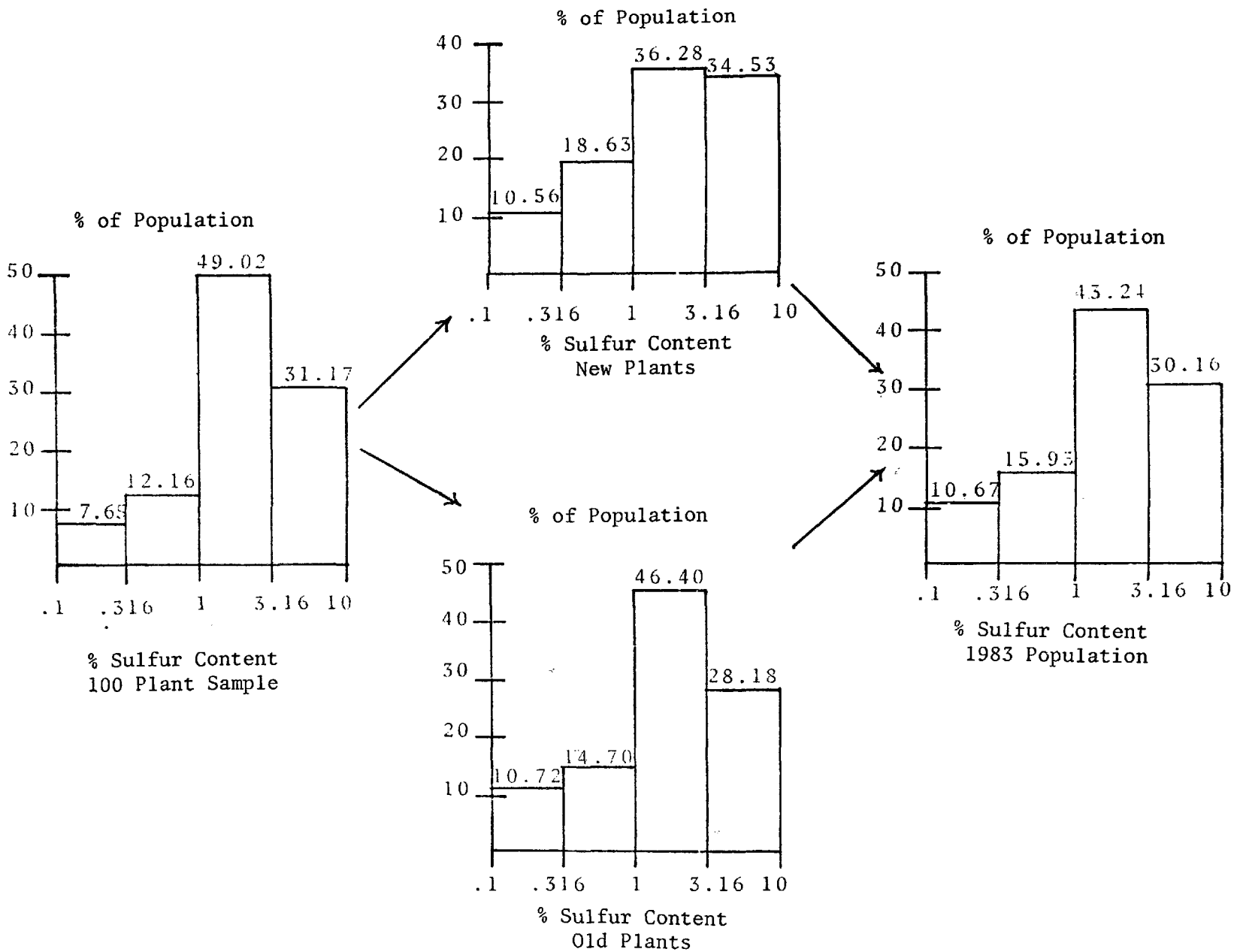

Figure 5-2 Complying Fuel Histograms: Example for all Plants Meeting AQS with No Coal Conversion and 4.16%/yr Growth Rate

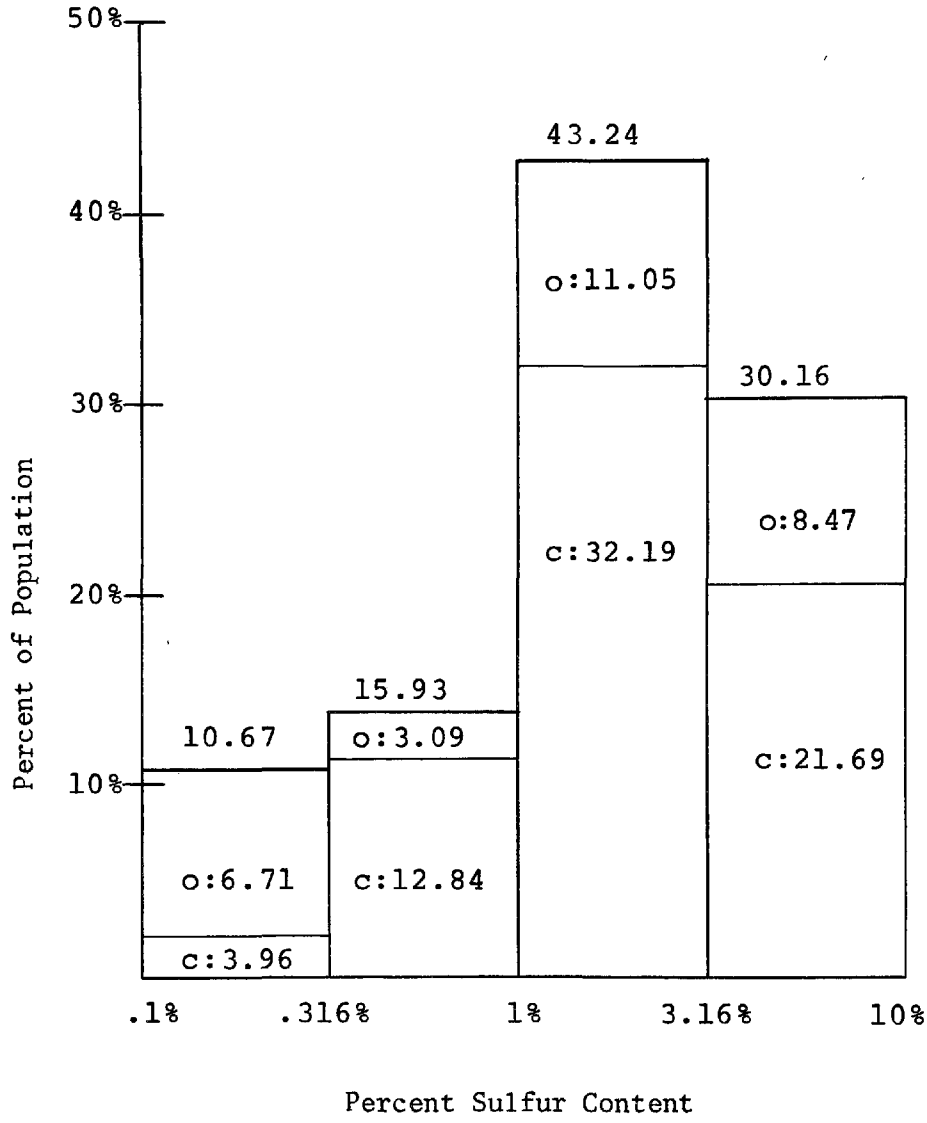

Figure 5- 3 Oil (o) and Coal (c) Contributions to the 1983 Complying Fuel Histogram of Figure 5-2

5.6 Sulfur Oxide Control Technologies

For each fuel type (coal or oil) and for each complying fuel range, the control technologies which provide sufficient control are determined. The energy consumption of these controls have been specified (see Table 3-2). Three major scenarios have been selected in approaching the myriad of sulfur oxide control technologies available. The second and third scenarios are the addition of coal washing and blending, both pre-plant energy consumption systems, to the basic scenario. To each of these scenarios a number of options could be added based on tall stacks or supplementary control systems (SCS). Table 5-9 summarizes the scenarios and the options and a complete discussion follows.

Scenario 1.S Scrubbers and Low Sulfur Fuel

The general method used in each of these scenarios is to construct a matrix of energy consumptions in percentages. The energy consumption matrix for scenario 1.S is shown in Table 5-10. This matrix in general describes the percentage energy consumption needed to obtain an equivalent sulfur fuel range. If meeting a particular regulatory scenario requires sulfur fuel content in the range 1.0-3.16 percent, the energy consumption for each fuel and/or region is shown in that column. This complying fuel could be obtained by either scrubbing the available coal in that region or transporting it from a region which does have that sulfur content coal.

In order to pursue this analysis in a reasonable manner, two simplifying assumptions have been made about coal availability.

- Mixed coal is only available in the 0.316-1.0 and 3.16-10.0 percent sulfur ranges.
- The low sulfur coal (0.316-1.0 percent) is only available in region A.

While the actual case is somewhat less restrictive, these assumptions form a practical basis for modeling the complex of options. The regions are as presented in Figure 3-2.

TABLE 5-9

SULFUR OXIDE CONTROL TECHNOLOGY SCENARIOS

1.S Scrubbers and Low Sulfur Fuel

Compliance through the use of low sulfur western coal and scrubbers at coal fired plants. Compliance through oil desulfurization at oil fired plants.

2.S Addition of Coal Washing

Same as scenario 1.S but coal washing is used wherever it can replace scrubbers.

3.S Addition of Coal Blending

Same as scenario 1.S but blending of low sulfur western coal is used wherever it can replace scrubbers.

Options (can be combined with any of the above scenarios.)

SCS(E)	SCS permitted everywhere at both old and new plants.
SCS(ROC)	SCS permitted in the rest of the country outside of so called "high sulfate states".
TS(E)	Tall stacks permitted everywhere for new plants.
TS(ROC)	Tall stacks permitted at new plants only outside of so called "high sulfate states".

TABLE 5-10

ENERGY CONSUMPTION MATRIX (PERCENT BY PLANT)

SCENARIO 1.S SCRUBBERS AND LOW SULFUR FUEL "MOST LIKELY" VALUES

Plant Type	Area	Sulfur Fuel Range (Percent Sulfur in Fuel) 0.1-0.316	0.316-1.0	1.0-3.16	3.16-10.0
Coal	Region A	3[a]	0	0	0
	Region B	7[a+b]	4[a]	3[a]	0
	Region C	8[a+b]	4[a]	3[a]	0
Oil		6[a]	3[c]	0	0

a. scrubbing utilized
b. transportation utilized
c. desulfurization utilized

A detailed discussion of Table 5-10 is best started with plants that need 0.316-1.0 percent sulfur fuel and are coal-fired in Region B. Since Region B doesn't have any low sulfur coal, coal could be transported from Region A at a 4 percent energy consumption, or scrubbers could be used for 3.16-10.0 percent coal also at a consumption of 4 percent to achieve the needed sulfur fuel range. Since both methods result in the same energy consumption, the only difference might be in coal availability. For this case we have chosen to scrub and save the low sulfur coal for other needs. For Region C, however, scrubbing for the 0.316-1.0 percent coal range was selected.

For the column headed 1.0-3.16 percent sulfur, not as much scrubbing would be required. An assumption that 75 percent of the stack gases will be scrubbed has been made, thus a 3 percent energy consumption. Coal-fired plants in Region C with a requirement for 0.1-0.316 percent sulfur could transport low sulfur coal (5 percent) and then partially scrub it (3 percent). The energy requirement in each sulfur range is therefore, a combination of scrubbing and transportation to achieve that complying sulfur range from the available coal. The oil energy consumptions represent the necessity for desulfurization to meet the lower sulfur fuel requirements.

This input matrix of energy consumption is then multiplied by the number of megawatts in an identical matrix. Section 5.5 develops a complying fuel histogram for a specific regulatory scenario (AQS) for the 1983 population of power plants and divided by coal and oil. The only remaining breakdown is by region for coal. The 100 plant sample and its expansion are based on the geographic regions shown in Figure 5-1. The energy consumption matrix is, however, based on coal regions (see Figure 3-2). It was assumed, because a common basis was not obtainable, that the percentage of megawatts of coal-fired power was nearly equivalent to the percentage of total generating capacity by region. Table 5-11 shows that, for 1973 data, that was in general the case. A nominal weighting factor was selected and is used to divide the total coal-fired megawatts projected for 1983 into each of regions A, B, and C. In other words, we expect that 52 percent of the coal will be used in Region C since 52 percent of megawatt generating capacity will be there.

TABLE 5-11

DISTRIBUTION OF UTILITY COAL CONSUMPTION AND GENERATING CAPACITY BY REGION

Coal Region	Geographic Areas	Distribution of Utility Coal Consumption, 1973 (% of Btu content)	Distribution of U.S. Generating Capacity, 1973 (% of Capacity)	Weighting Factor
A) Low Sulfur Coal Indigenous and Available	West North Central Mountain	14	11	0.12
B) Low Sulfur Coal Could Be Transported	East North Central West South Central	35	37	0.36
C) Low Sulfur Coal Unavailable	New England Mid-Atlantic South Atlantic East South Central Pacific	51	52	0.52

The complying fuel matrix is calculated using a computer program (see Appendix B). Then using an input energy consumption matrix, the program calculates the national total energy consumption for the regulatory scenario of interest.

Energy consumption matrices for a range of process energy consumptions were tested. Table 5-10 is for the "most likely" values in Table 3-2. Other calculations were made for the high and low ends of the range so that the range of final results could be shown. Separate matrices could also be developed for the pre-plant, in-plant and post-plant breakdown. Those matrices as well as the oil, coal and electricity breakdown are developed from Table 3-3.

Scenario 2.S Addition of Coal Washing

This scenario provides for the replacement of scrubbers with coal washing where possible. The energy consumption matrix is shown in Table 5-12. The energy consumption for oil-fired plants remains the same as in Scenario 1.S. One major assumption is that coal washing will not be able to reduce the sulfur fuel percent by more than one percentage range. Therefore, plants in Region C which need 0.316-1.0 percent sulfur fuel cannot use washing of 3.16-10.0 percent sulfur coal but must scrub the flue gas from that coal. In the 0.1-0.316 and 1.0-3.16 percent ranges coal washing can, however, be used and transportation added where needed.

Scenario 3.S Addition of Coal Blending

Instead of substituting coal washing, this scenario substitutes coal blending for scrubbers where possible. The assumptions necessary for this scenario follow:

- Blending can only be used to obtain 1.0-3.16 percent coal from the blend of 3.16-10.1 percent coal and low sulfur western coal.
- Blending is in the ratio of 1/3 low sulfur to 2/3 high sulfur coals.

TABLE 5-12

ENERGY CONSUMPTION MATRIX

SCENARIO 2.S ADDITION OF COAL WASHING "MOST LIKELY" VALUES

PERCENT BY PLANT

Plant Type	Area	Sulfur Fuel Range (Percent Sulfur in Fuel) 0.1-0.316	0.316-1.0	1.0-3.16	3.16-10.0
Coal	Region A	7[d]	0	0	0
	Region B	11[b+d]	4[b]	7[d]	0
	Region C	12[b+d]	4[a]	7[d]	0
Oil		6[c]	3[c]	0	0

a. scrubbing utilized
b. transportation utilized
c. desulfurization utilized
d. coal washing utilized

The energy consumption matrix for Scenario 3.S is shown in Table 5-13. The above assumptions imply that the only alteration to the Scenario 1.S energy consumption matrix for the Scenario 3.S matrix is in the 1.0-3.16 percent sulfur column. The 1 percent values shown in that column are for blended coal where the energy consumption is for transportation of 1/3 of the coal from Region A and 1/3 the transportation energy consumption rate.

Options

Each of the following four options can be added to any of the three major scenarios to quantify the effect.

Option SCS(ROC) Supplementary Control Systems in Low Sulfate Areas to Meet Air Quality Standards

In this scenario, supplementary control systems are permitted outside the East Coast and other high sulfate states (rest of the country, ROC) in order to meet air quality standards. Energy requirements for each complying fuel range are the same as for Scenario 1.S, given by Table 5-10. Data on the changes in fuel requirements which this permits in the rest of the country is obtained from ERT Document 1547B [ERT, 1975].

Table 5-14 shows the percentage of megawatts in three complying fuel ranges, 0.1-0.316, 1.0-3.16, >3.16 with and without supplementary control systems of assumed 95 percent reliability. Only the ROC portion of the 100 plant sample is considered and compliance is based only on air quality standards.

The results of the previous study shown in Table 5-14 are not yet in a form appropriate for use in the present study. In order to use these results, we make the following assumptions:

- The effect of supplementary control systems is to shift unit complying fuel requirements to the next higher complying fuel sulfur range (As opposed to skipping over a complying fuel range entirely).
- The fraction of the megawatts shifted in the range 0.1 - 0.316 is the same as in the range 0.316 - 1.0.

TABLE 5-13

ENERGY CONSUMPTION MATRIX

SCENARIO 3.S ADDITION OF COAL BLENDING "MOST LIKELY" VALUES

PERCENT BY PLANT

Plant Type	Area	Sulfur Fuel Range (Percent Sulfur in Fuel) 0.1-0.316	0.316-1.0	1.0-3.16	3.16-10.0
Coal	Region A	3[a]	0	0	0
	Region B	7[a+b]	4[b]	1[d]	0
	Region C	8[a+b]	4[a]	1[d]	0
Oil		6[c]	3[c]	0	0

a. scrubbing utilized
b. transportation utilized
c. desulfurization utilized
d. blending utilized (energy use as transportation)

TABLE 5-14

PERCENTAGE OF ENERGY GENERATION BY SULFUR FUEL RANGES

REDISTRIBUTION WITH USE OF 95% RELIABLE SUPPLEMENTARY CONTROL SYSTEMS

		Sulfur Fuel Range (Percent Sulfur in Fuel) 0-1	1-3	>3
Coal	without SCS	40	20	40
	with SCS	14	44	42
Oil	without SCS	46	26	28
	with SCS	31	15	54

With these assumptions, the fraction of the population in each complying fuel range which moves to the next higher sulfur complying fuel range (the switch factor) can be determined from Table 5-14. Results are shown in Table 5-15.

Option SCS(E) Supplementary Control Systems Permitted Everywhere to Meet Air Quality Standards

Energy requirements for each complying fuel range are again based on Table 5-11. Switch factors for East Coast and other high sulfate states in addition to rest of country are computed by the same method as in Option SCS(ROC). The results are also shown in Table 5-15.

Note that switch factors for oil units in East Coast and other high sulfate states are identical since these regions are combined in the calculations.

Option TS(ROC) Post-1974 Units Outside the East Coast and Other High Sulfate States and Option TS(E) Plants Everywhere Use Tall Stacks to Meet Air Quality Standards

In these options, energy requirements are the same as in the basic scenario used and the concept of a complying fuel range switch factor is again used. The basic assumption is that tall stacks would permit new units to fire fuel in the next highest complying fuel range.

This assumption has not been verified by site specific model calculations. We can, however, give a rough estimate of the increases in stack height which would be required.

The peak concentration downwind of a point source will vary roughly as the inverse square of the effective plume height (the plume rise plus the physical stack height). A change in complying fuel range will thus accompany an increase in effective plume height of $\sqrt{3.16} = 1.78$. Where plume rise contributes little to effective plume height (under peak concentration conditions) an increase in physical stack height by this amount would be required. Where effective plume height is mainly due to plume rise, a physical stack height of 0.78 times the plume rise would be required.

TABLE 5-15

PERCENTAGE OF FUEL RANGE SWITCHES
FOR SUPPLEMENTARY CONTROL SYSTEM OPTIONS

Sulfur Fuel Ranges		Percentage of Mw Capacity to Switch Fuel Sulfur Range					
		East Coast		Other High Sulfate States		Rest of Country	
Switch from	Switch to	Coal	Oil	Coal	Oil	Coal	Oil
0.1-0.316	0.316-1.0	100	0	78	0	65	33
0.316-1.0	1.0-3.16	100	0	78	0	65	33
1.0-3.16	3.16-10.0	54	78	57	78	10	160

6. 1983 PROJECTIONS

This chapter describes the 1983 projected energy consumption by the various environmental controls identified as having a significant effect in the fossil fuel, steam electric generating industry. It primarily focuses on sulfur dioxide controls, because they have a much greater effect than do the other controls. Waste heat disposal and particulate matter controls are also discussed, because they have a lesser but identifiable effect on energy in the study year of 1983. The range of the 1983 energy consumption by the environmental controls is 2.9 to 8.1 percent depending on the type of controls employed and the goals to be achieved (see Table 6-1).

To develop 1983 projected energy consumption the following modifications were made to the base year calculation. (See Section 4.)

- The 100 plant sample was expanded to the 1983 plant population assuming two growth rates (4.16 percent and 6.73 percent) without coal conversion, with coal consversion at new plants and with coal conversion at all plants.
- Fuel sulfur content requirements, closed-cycle cooling system requirements and particulate control requirements were determined for the 1983 population based on specific regulatory scenarios.
- Various control system options, with their associated energy consumptions were postulated.
- Energy consumption for the industry in 1983 was determined for each set of control system options by assuming compliance with the regulatory scenario.

Details of the methodology are discussed in Section 5 for sulfur dioxide control and in this section for, waste heat disposal and particulate control.

TABLE 6-1

PERCENT OF TOTAL ENERGY USE FOR TOTAL SO_2, WASTE HEAT AND PARTICULATE CONTROL

	Smallest Anticipated Consumption	Largest Anticipated Consumption
SO_2	2.5	7.2
Waste Heat	0.2	0.7
Particulate	0.2	0.2
Total	2.9	8.1

*Based on compliance with all present SO_2 regulations, SO_2 scenarios 1-3, waste heat scenarios 1-5 and ESP on coal fired plants. The SO_2 calculations do not include BACT which increases the totals to 4.1 and 8.2.

Analysis of the 1983 projections indicates the following.

- Estimates of the total energy consumption for environmental control in 1983 range from a high of 8.1 percent to a low of 2.9 percent.
- Control of sulfur dioxide emissions makes the greatest energy demand.
  - If best available control technology, including low sulfur fuel use and scrubbers, is required at new plants, after 1980, the total sulfur dioxide energy demand can be as large as 7.3 percent.
  - Energy demand for compliance with all present regulations (without the additional requirement of best available control technology) would be approximately 2.5 to 7.2 percent.
  - The energy saving resulting from the use of tall stacks and/or supplementary control systems would be approximately one percent.
- Disposal of cooling water waste heat has the second greatest energy demand: Approximately 0.4 percent.
- Particulate controls have the third greatest energy demand: Approximately 0.2 percent.

6.1 Sulfur Dioxide Controls

The variations of the SO_2 related energy requirements are based on:

- the type of control technology employed,
- the air quality goal to be achieved,
- the degree of conversion of plants to coal, and
- the growth rate of the industry.

Of these four factors, control technology and air quality goals are the most significant. Degree of coal conversion and growth rate have relatively minor effects during the study year.

Three SO_2 control technology scenarios (Table 5-9) were developed to test the energy requirements of high-energy systems (scrubbers, coal washing and coal blending). The three scenarios have a range of energy requirements from 2.5 to 7.2 percent of 1983 fossil-fuel energy inputs, (Table 6-2.)

Air Quality Goals

The effects of varying air quality goals were also studied and are displayed in Table 6-3. The energy requirements for each of the three technology scenarios are presented for each of five air quality goal scenarios (Table 5-5). Attainment of primary and secondary air quality standards, with a 1.6 to 3.8 percent energy requirement, is the goal of attaining good air quality. The addition of all the regulatory scenarios with a range of 3.4-5.2 percent energy requirement represents the goal of maintaining air quality with "all present regulations."

In Table 6-3, it can be seen that the most important air quality goal beyond attainment of health and welfare standards is the compliance with State Implementation Plans (SIP). For a variety of reasons (for example, local options, conservatism, lack of sophisticated modeling techniques), the SIP's tend to require a lower level of sulfur oxide emissions than is necessary. The calculations for the SIP compliance determination are based on the minimum sulfur content fuel which can be fired and still meet the standard as calculated by ERT in a previous study (see Chapter 5 and ERT, 1975).

Estimates of reductions in saleable power are presented in Table 6-4 for the various control technology and regulatory scenarios. Reductions in saleable power result primarily from the use of LSWC which has a lower heat value than most higher sulfur coals and from the operation of scrubbers. Table 6-5 presents the range of estimated reductions in saleable power considering compliance with all present regulations (the bottom column of Table 6-4).

TABLE 6-2

RANGE OF SULFUR CONTROL ENERGY REQUIREMENTS TO MEET ALL PRESENT REGULATIONS* (Percent of Total Energy Use)

SCENARIO	LOW	MOST LIKELY	HIGH
1.S (Scrubbers and low sulfur Western coal (LSWC)e	3.0	3.8	5.8
2.S (Addition of coal washing)	3.6	5.2	7.2
3.S (Addition of blending)	2.5	3.4	4.9

*Old Plants: Table 5-5 Scenarios 1, 2 and 4 (AQS + SIP)
New Plants: Table 5-5 Scenarios 1-5 (AQS + SIP + NSPS + ND)

TABLE 6-3

MOST LIKELY SULFUR CONTROL ENERGY REQUIREMENTS TO MEET VARIOUS REGULATIONS IN 1983

(Percent of total energy use)

Regulatory Requirement	Scenario 1 LSWC & Scrubbers	Scenario 2 Addition of coal washing	Scenario 3 Addition of coal blending
Old Plants: PAQS* New Plants: PAQS	1.9	3.2	1.3
Old Plants: AQS New Plants: AQS	2.2	3.8	1.6
Old Plants: AQS + SIP New Plants: AQS + SIP	3.3	5.1	2.6
Old Plants: AQS + SIP New Plants: AQS + SIP + NSPS	3.5	4.6	3.1
Old Plants: AQS + SIP New Plants: AQS + SIP + NSPS + ND	3.8	5.2	3.4

*Note: PAQS = Primary Air Quality Standards
NSPS = New Source Performance Standards
SIP = State Implementation Plans
LSWC = Low sulfur western coal
AQS = Primary and Secondary Air Quality Standard
ND = Non-deterioration

TABLE 6-4

MOST LIKELY CAPACITY LOSS RESULTING FROM SULFUR CONTROL TO MEET VARIOUS REGULATIONS IN 1983

(Percent of Total Energy Use)

Regulatory Requirements	Scenario 1 LSWC & Scrubbing	Scenario 2 Addition of coal washing	Scenario 3 Addition of coal blending
Old Plants: PAQS* New Plants: PAQS	1.4	0.7	0.7
Old Plants: AQS New Plants: AQS	1.7	0.9	0.9
Old Plants: AQS + SIP New Plants: AQS + SIP	2.5	1.7	1.8
Old Plants: AQS + SIP New Plants: AQS + SIP + NSPS	2.7	2.6	2.5
Old Plants: AQS + SIP New Plants: AQS + SIP + NSPS + ND	3.0	2.6	2.8

*Note: See Table 6-3 for key to abbreviations

TABLE 6-5

RANGE OF CAPACITY LOSS TO MEET ALL PRESENT REGULATIONS* (Percent of Total Energy Use)

SCENARIO	LOW	MOST LIKELY	HIGH
1.S (Scrubbers and low sulfur fuel)	1.7	3.0	4.7
2.S (Addition of coal washing)	1.5	2.6	5.1
3.S (Addition of blending)	1.6	2.8	4.8

*Old Plants: Table 5 Scenarios 1, 2, and 4 (AQS + SIP)
New Plants: Table 5 Scenarios 1-5 (AQS + SIP + NSPS + ND)

Coal Conversion

The energy requirements of the three scenarios were determined for three coal conversion policies:

- no coal conversion beyond that considered by NERA (NERA, 1975),
- conversion of new plants, and
- conversion of all plants.

Table 6-6 displays the results of these coal options. Conversion of new plants increases the energy consumption by only 0.1 to 0.3 percent. However, because of the larger number of old plants, coal conversion of old and new plants increases energy consumption for SO_2 control by up to 1.2 percent. Conversion of new plants is the basis which has been chosen for the results presented.

Growth Rate

The energy requirements were also determined at two different growth rates:

1) 4.16 percent compounded based on NERA projections (NERA, 1975)

2) 6.73 percent compounded based on FPC projections, (FPC, 1974a)

Table 6-7 indicates that assumed growth rates have little effect on environmentally-based energy requirements. The additional energy requirement is approximately 0.1 percent.

The higher growth rate was chosen for the presentation of results in the text.

Energy Source

Sulfur oxide control energy requirements are broken down by energy source in Table 6-8. All of the electricity consumed by sulfur oxide control systems is assumed to have been generated from coal combustion as shown in the "direct fuel usage" portion of Table 6-8.

TABLE 6-6

SULFUR OXIDE CONTROL ENERGY REQUIREMENTS

COAL CONVERSION COMPARISON (Percent of Total Energy Use)

	Scenario 2: LSWC + Scrubbers + Coal Washing		
Regulatory Requirements	No Coal Conversion	Coal Conversion New Plants Only	Coal Conversion Old + New Plants
Old Plants: PAQS* New Plants: PAQS	2.9	3.2	4.0
Old Plants: AQS New Plants: AQS	3.4	3.8	4.6
Old Plants: AQS + SIP New Plants: AQS + SIP	4.9	5.1	5.8
Old Plants: AQS + SIP New Plants: AQS + SIP + NSPS	4.5	4.6	5.4
Old Plants: AQS + SIP New Plants: AQS + SIP + NSPS + ND	4.9	5.2	6.0

*Note: See Table 6-3 for key to abbreviations.

TABLE 6-7

SULFUR OXIDE CONTROL ENERGY REQUIREMENT

COAL CONVERSION COMPARISON (Percent of Total Energy Use)

Regulatory Requirement	Scenerio 2: LSWC + Scrubbers + Coal Washing	
	High Growth Rate 0.0673	Low Growth Rate 0.0416
Old Plants: PAQS* New Plants: PAQS	3.2	3.2
Old Plants: AQS New Plants: AQS	3.8	3.7
Old Plants: AQS + SIP New Plants: AQS + SIP	5.1	4.9
Old Plants: AQS + SIP New Plants: AQS + SIP + NSPS	4.6	4.6
Old Plants: AQS + SIP New Plants: AQS + SIP + NSPS + ND	5.2	5.0

*Note: See Table 6-3 for key to abbreviations.

TABLE 6-8

SULFUR OXIDE CONTROL ENERGY REQUIREMENTS BY ENERGY SOURCE TO MEET ALL PRESENT REGULATIONS.* (BASED ON "MOST LIKELY" COLUMN 6-2) (Percent of Total Energy Use)

Scenario	Coal	Oil/Gas	Electricity
1.S (Scrubbers and low sulfur fuel)	0.0	2.1	1.7
2.S (Addition of coal washing)	2.5	2.0	0.7
3.S (Addition of coal blending)	0.0	2.2	1.2

BREAKDOWN IN TERMS OF DIRECT FUEL USAGE FOR THE ABOVE TABLE

Scenario	Coal	Oil/Gas
1.S	1.7	2.1
2.S	3.2	2.0
3.S	1.2	2.2

*Old Plants: Table 5-5 Scenarios 1, 2, and 4 (AQS + SIP)
New Plants: Table 5-5 Scenarios 1-5 (AQS + SIP + NSPS + ND)

TABLE 6-9

SULFUR OXIDE CONTROL ENERGY REQUIREMENTS BY LOCATION IN THE PROCESS STREAM TO MEET ALL PRESENT REGULATIONS.* (BASED ON "MOST LIKELY" COLUMN OF TABLE 6-2) (Percent of Total Energy Use)

Scenario	Pre-Plant	In-Plant	Post-Plant
1.S (Scrubbers and low sulfur fuel)	2.1	1.4	0.2
2.S (Addition of coal washing)	4.5	0.6	0.1
3.S (Addition of coal blending)	2.2	1.0	0.2

Location In the Process Stream

The location's of sulfur oxide control energy requirements in the process stream are presented in Table 6-9. Most of the energy consumption is "pre-plant," due to the large amounts of energy used in transporting LSWC to other regions and the energy lost during the coal washing process. "In-plant" and "post-plant" energy consumption is primarily the result of scrubber operation and sludge removal.

Supplementary Control System (SCS) and Tall Stacks (TS)

Three tables have been presented (6-10A, 6-10B, 6-10C) to show the range of energy requirements for each of the options under the three scenarios 1.S, 2.S and 3.S respectively. Notice that requiring only air quality standards (Scenarios 1 and 2 in Table 5-5) reduces the energy requirement by an amount ranging from -1.1 to -2.5 percent from the corresponding scenario "for all present regulations" in Table 6-2. Further reductions occur with the tall stack and SCS options. Even though tall stacks are only used at new plants, they result in appreciable additional energy savings in 1983 (-0.7 to -1.2 percent for the "most likely" column depending on geographic coverage). If SCS is only used outside the so-called "high sulfate" states the additional energy savings are also modest (-0.3 to -0.4 percent). Only in the case of SCS used without restriction for the entire population are appreciable additional savings realized (-0.5 to -1.1 percent).

Best Available Control Technology (BACT)

Tables 6-11A, 6-11B and 6-11C present the results for each scenario with BACT instituted after 1980. The energy increment due to BACT ranges from 0.1 to 1.2 depending on the scenario considered. Note that the high end of the range of energy consumption does not get much addition with BACT but the low end of the range does.

TABLE 6-10A

RANGE OF SULFUR OXIDE CONTROL ENERGY REQUIREMENTS TO MEET AIR QUALITY STANDARDS ONLY (SCENARIO 1.S LOW SULFUR WESTERN COAL AND SCRUBBERS) (Percent of Total Energy Use)

Option	Low	Most Likely	High
None	1.8	2.2	3.5
SCS(E)	1.3	1.6	2.5
SCS(ROC)	1.5	1.9	3.1
TS(E)	1.2	1.5	2.3
TS(ROC)	1.6	2.0	3.2

TABLE 6-10B

RANGE OF SULFUR OXIDE CONTROL ENERGY REQUIREMENTS TO MEET AIR QUALITY STANDARDS ONLY. (SCENARIO 2.S ADDITION OF COAL WASHING) (Percent of Total Energy Use)

Option	Low	Most Likely	High
None	2.5	3.8	5.3
SCS(E)	1.7	2.7	3.7
SCS(ROC)	2.2	3.4	4.7
TS(E)	1.7	2.6	3.6
TS(ROC)	2.3	3.6	5.0

TABLE 6-10C

RANGE OF SULFUR OXIDE CONTROL ENERGY REQUIREMENTS TO MEET AIR QUALITY STANDARDS ONLY. (SCENARIO 3.S ADDITION OF COAL BLENDING (Percent of Total Energy Use)

None	1.2	1.6	2.4
SCS(E)	0.8	1.1	1.5
SCS(ROC)	0.9	1.2	1.9
TS(E)	0.7	0.9	1.4
TS(ROC)	0.9	1.3	1.9

TABLE 6-11A

RESULTS FOR BEST AVAILABLE CONTROL TECHNOLOGY

BASED ON SCENARIO 1.S FOR PRE-1980 PLANTS (Percent of Total Energy Use)

	Low	Most Likely	High
Scenario 1.S to 1980, BACT after 1980	4.0	4.5	5.9
Scenario 1.S to 1983	3.0	3.8	5.8
Energy Increment Due to BACT	1.0	0.7	0.1

TABLE 6-11B

RESULTS FOR BEST AVAILABLE CONTROL TECHNOLOGY

BASED ON SCENARIO 2.S FOR PRE-1980 PLANTS (Percent of Total Energy Use)

	Low	Most Likely	High
Scenario 2.S to 1980, BACT after 1980	4.7	5.9	7.3
Scenario 2.S to 1983	3.6	5.2	7.2
Energy Increment Due to BACT	1.1	0.7	0.1

TABLE 6-11C

RESULTS FOR BEST AVAILABLE CONTROL TECHNOLOGY

BASED ON SCENARIO 3.S FOR PRE-1980 PLANTS (Percent of Total Energy Use)

	Low	Most Likely	High
Scenario 3.S to 1980, BACT after 1980	3.7	4.3	5.3
Scenario 3.S to 1983	2.5	3.4	4.9
Energy Increment Due to BACT	1.2	0.7	0.4

6.2 Waste Heat Disposal

The total environmental energy consumption which can be assigned to the 1983 fossil fuel, steam electric generating industry due to the control of waste heat disposal depends on the following four parameters:

- the fraction of the 1974 base-year population which has installed closed-cycle cooling for non-environmental reasons,
- the fraction of the 1975-1983 design population which has been designed for closed-cycle cooling due to non-environmental reasons,
- the fraction of the 1974 base-year population not falling under the promulgated thermal effluent guidelines which is permitted by the states to retain open-cycle cooling, and
- the fraction of the 1975-1983 design population which will be granted 316(a) variances for open-cycle cooling.

The five scenarios based on variations of these parameters which were developed are as follows.

1.W: EPA assumptions contained in the report "Economic Analysis of Effluent Guidelines Steam Electric Power Plants" [TBS, 1976] with the additional assumption that 65 percent of closed-cycle systems installed before 1975 are for non-environmental reasons.

2.W: Same as scenario 1.W but assumes a higher percentage (80 vs. 65%) of 1974 base year already closed-cycle cooling was installed for non-environmental reasons.

3.W: Same as scenario 1.W except that a lower percentage (75 vs. 89.2%) of the 1974 base year open-cycle cooling would be allowed by the states to retain open-cycle cooling.

4.W: Same as scenario 1.W except that a lower percentage (50 vs. 87.5%) of the capacity added in 1975-1978 would be assumed to receive a 316(a) variance.

5.W: Same as scenario 1.W except that the percent of plants added in 1979-1983 installing closed-cycle cooling for environmental reasons does not vary from the 1975-1978 percentage.

A summary of the scenario parameters is found in Table 6-12.

All five environmental waste heat control scenarios examined have environment energy consumption percentages from 0.2 to 0.7 percent with respect to 1983 fossil fuel, steam electric plant fuel usage. The environmental consumption percentages by scenario are given in Table 6-13.

In order to calculate the percent of 1983 generating plant population which will have closed-cycle cooling for environmental reasons, the following equation was used:

$$p = f\,(1-g)\,[1-(h_f + h_s)] \qquad (6\text{-}1)$$

where:

p = fraction of generating capacity which has closed-cycle cooling for environmental reasons;

f = fraction of generating capacity affected by consideration of a particular subcategory;

g = fraction with closed-cycle cooling for non-environmental reasons;

h_f = fraction which obtains a 316(a) variance for open-cycle cooling;

h_s = fraction permitted open-cycle cooling by the states.

For each of the five scenarios, Equation 6-1 is applied to three distinct time intervals: 1) the 1974 base-year capacity; 2) the generating capacity added in the period January 1, 1975 - January 1, 1979; and 3) the generating capacity added in the period January 1, 1979 - January 1, 1984. In addition, for each scenario the total environmental energy consumption is calculated for the growth rate assumption of 6.73 percent per year. A lower growth rate of 4.16 percent per year does not change the results.

The calculations for the first scenario are given in Table 6-10.

TABLE 6-12

SUMMARY OF WASTE HEAT CONTROL SCENARIOS

(Percentages of Mw affected)

Year Constructed	Design System			Scenario[a] 1.W	2.W	3.W	4.W	5.W
up to 1974	Closed-cycle	32.4	environmental reasons	35	20			
			non-environmental reasons	65	80			
	Open-cycle Federal regs	5.5	no variance	9.6				
			variance	90.4				
	Open-cycle State regs	62.1	control required	10.8		25		
			permitted to remain	89.2		75		
1975-1978	Closed-cycle	49.9	environmental reasons	20.8				
			non-environmental reasons	30.6				
			variance	48.6				
	Open-cycle	50.1	no variance	13.5			50	
			variance	87.5			50	
1978-1983	Closed-cycle	100	environmental reasons	3.2				50
			non-environmental reasons	43.3				25
			variance	53.5				25

a. blanks indicated identical values Scenarios 1.W.

TABLE 6-13

ENVIRONMENTAL ENERGY CONSUMPTION PERCENTAGE FOR WASTE HEAT CONTROL SCENARIOS

(Percent of Total Energy Use)

Scenario	Low	Most Likely	High
1.W	0.2	0.4	0.5
2.W	0.2	0.3	0.4
3.W	0.3	0.5	0.7
4.W	0.3	0.5	0.7
5.W	0.3	0.5	0.7

Scenario 1.W:

The assumptions used in this scenario are those developed by EPA in its report "Economic Analysis of Effluent Guidelines Steam Electric Power Plants", [TBS, 1976] as follows:

1) Of the 5.54 percent 1974 generating capacity covered by the effluent guidelines, 90.4 percent will receive 316(a) variances.

2) Of the 62.1 percent 1974 generating capacity which has open-cycle cooling and which is not covered by the federal guidelines, 89.2 percent will be permitted by the states to retain open-cycle cooling.

3) Of those plants scheduled for on-line startup in the period 1975-1978 which will employ closed-cycle cooling, 30.6 percent of these plants have closed-cycle cooling for non-environmental reasons.

4) Of those plants scheduled for on-line startup in the period 1975-1978 which were designed with open-cycle cooling, 48.6 percent of these plants will receive 316(a) variances.

5) Of those plants scheduled for on-line startup after 1978, 53.5 percent will receive 316(a) variances.

6) Of those plants scheduled for on-line startup after 1978 which will be designed for closed-cycle cooling, 43.3 percent will employ closed-cycle cooling for non-environmental reasons.

In addition, the following assumption is made by ERT in this case analysis:

7) Of those plants within the 1974 baseyear capacity which have closed-cycle cooling systems, 65 percent have employed closed-cycle cooling for non-environmental reasons.

The results of these assumptions, given in terms of the fraction of generating capacity which will have closed-cycle cooling for environmental reasons, are presented in Table 6-14 for each of the three time intervals considered.

TABLE 6-14

CALCULATIONS FOR PERCENT OF 1983 FOSSIL FUEL GENERATING CAPACITY WHICH WILL EMPLOY CLOSED-CYCLE COOLING FOR ENVIRONMENTAL REASONS UNDER THE ASSUMPTIONS OF SCENARIO 1.W

Time Interval	Subcategory	f	g	h_f	h_s	p	e*
1. 1974	Already closed-cycle	0.324	0.65	0.0	0.0	0.113	1.5
	Open-cycle falling under Federal guidelines	0.055	0.0	0.904	-	0.005	3.0
	Open-cycle not covered by Federal guidelines	0.621	0.0	-	0.892	0.067	3.0
	Total	1.000	-	-	-	0.185	-
2. 1975-1978	Designed closed-cycle	0.499	0.306	0.688	0.002	0.104	1.5
	Designed open-cycle	0.501	0.0	0.075	0.0	0.063	3.0
	Total	1.000	-	-	-	0.167	-
3. 1979-1983	Total	1.000	0.433	0.433	0.002	0.321	1.5

where $p = f(1-g)[1-(h_f+h_s)]$

and $p \equiv$ fraction of generating capacity which have closed-cycle cooling for environmental reasons;

$f \equiv$ fraction of generating capacity affected by consideration of a particular subcategory;

$g \equiv$ fraction with closed-cycle cooling for non-environmental reasons;

$h_f \equiv$ fraction which obtain a 316(a) variance for open-cycle cooling;

$h_s \equiv$ fraction not covered by federal guidelines which are permitted open-cycle cooling by the states.

and where $e \equiv$ % energy consumption assumed for each subcategory for closed-cycle systems installed/designed for environmental reasons.

* = percent energy consumption values assigned are designated "Most Likely".

In order to determine the percent environmental energy consumption for each time interval, the derived value "p" for each subcategory is multiplied by the percent environmental energy consumption assumed for each sub-category due to closed-cycle cooling. The values used for "e" (i.e., percent energy consumption due to closed-cycle cooling) were determined for each subcategory by a general examination of the mix of retrofitted and designed closed-cycle cooling systems in that particular subcategory. High, most probable, and low energy consumptions values used for design cooling systems were 2.0, 1.5, and 1.0 percent, respectively. High, most probable, and low energy consumption values used for retrofitted cooling systems were 4.0, 3.0, and 2.0 percent, respectively.

Scenario 2.W:

The assumptions used in this scenario are exactly the same as Scenario 1.W, with one exception. In Scenario 1.W it was assumed that of those plants in the 1974 base year capacity, 65 percent had employed closed-cycle cooling for non-environmental reasons. Closed-cycle cooling systems installed before 1970 were predominately installed for non-environmental reasons. Therefore, the assumed figure of 65 percent in Scenario 1.W may be on the low side. In this scenario, it is assumed that 80 percent of the 1974 generating capacity which have closed-cycle cooling systems had installed such systems for non-environmental reasons.

Scenario 3.W:

The assumptions used in this scenario are exactly the same as Scenario 1.W, with one exception. In Scenario 1.W, it was assumed by EPA and TBS, Inc. that of the 62.1 percent 1974 generating capacity which has open-cycle cooling and which is not covered by the federal guidelines, 89.2 percent will be permitted by the states to retain open-cycle cooling. The figure of 89.2 percent was derived by assuming that the states would utilize a less stringent environmental risk criteria that would be used in the 316(a) variance procedure. An industry questionnaire conducted by the Utility Water Act Group with respect to EPA's initial proposed 316(a) regulations indicated that the industry believed a smaller quantity of megawatts would qualify for 316(a) exemption under a

State Water Quality Standards test if interpreted by the state than if interpreted by EPA [UWAG, 1974]. Although both the final regulations and the final megawatts covered by the effluent guidelines are different than those conditions considered in response to the utility industry questionnaire, it seems realistic to consider the effects of stricter environmental risk criteria utilization by the states for the 1974 base year population. Therefore, it is assumed in this scenario that:

1) Of the 62.1 percent 1974 generating capacity which has open-cycle cooling and which is not covered by the federal effluent guidelines, 75 percent will be permitted by the states to retain open-cycle cooling.

Scenario 4.W:

The assumptions used in this scenario are the same as in Scenario 1.W, with the following exception. In Scenario 1.W, it was assumed that of those plants scheduled for on-line startup in the period 1975-1978 which were designed with open-cycle cooling, 87.5 percent of these plants will receive 316(a) variances. In this scenario, the following assumption is made:

1) Of those plants scheduled for on-line startup in the period 1975-1978 which were designed with open-cycle cooling, 50.0 percent of these plants will receive 316(a) variances.

The purpose of this assumption is to examine the energy consumption effect of a lower than expected 316(a) variance granting rate for planned near-term installation of additional generating capacity.

Scenario 5.W:

The assumptions used in this scenario are the same as Scenario 1.W, with the following exception. In Scenario 1.W, the percentage of plant generating capacity added in the period 1979-1983 (originally 1979-1990 in the TBS report) which was projected to install closed-cycle cooling for environmental reasons was 3.2 percent. Both environmental risk criteria analysis and water availability determination procedures

critically depend on assumed siting policies - policies which become increasingly uncertain over the longer time period. Therefore, the following assumption is made for this scenario:

1) The percentage of plant generating capacity added in the period 1979-1983 which will install closed-cycle cooling for environmental reasons will be same as the total percentage affected for plants installed during 1975-1978, i.e., 43.9 percent (see Table 6-1).

Other Waste Heat Disposal Technology

The waste heat disposal technologies considered in Section 3 of this report are of four general types:

- once through systems
- once through with assistance from spray and other cooling systems
- closed-cycle systems
- combination of above systems.

The function of all air cooling systems is the rejection of the waste heat to the atmosphere either through a body of water or directly. An alternative heat disposal methodology is the utilization of the heat for some socially useful purpose. The three general methods of utilization, i.e., low-grade heat, steam, and total energy systems, are presently little used in the fossil fuel, steam electric generating industry.

If waste heat were used directly (e.g., space or water heating), the efficiency of steam power generating plants could be dramatically increased. For example, if 10 percent of the 67 percent waste heat from a power plant could be used to substitute for electric heating; then there would be a 20 percent increase in the efficiency of the plant. Such a percent increase in useable energy compares very favorably with the range of the energy demands of the environmental controls. Increasing the efficiency of power generation could "pay" for environmental control.

However, there is presently little planned construction for waste heat utilization during the next decade and for the purposes of this study, it was not considered.

6.3 Particulate Controls

The environmental energy consumption associated with the application of particulate controls for 1983 is estimated for two different growth rates of fossil-steam electricity generation and two degrees of coal conversion. As with the sulfur oxide control and waste heat disposal calculations, the growth rates used are 4.16 percent and 6.73 percent. The two coal conversion options are as follows:

#1 "No": Only existing plants identified as being capable of burning coal are converted to coal, and new plants can be either coal or oil-fired but at the following ratio of coal to oil plants, 4:1.

#2 "Yes": Only existing plants identified as being capable of burning coal are converted to coal, and all new plants will burn coal.

The energy requirements used in these calculations are as follows: the application of electrostatic precipitators to all coal-fired plants with an energy requirement of 0.3 percent, and the application of multiple cyclones to all oil-fired plants with a negligible energy requirement.

The energy consumed for particulate control in 1983 is summarized in Table 6-15. The variation between the different future projections is quite small. The environmental energy consumption for particulate control with coal conversion is 0.24 percent of the fossil fuel energy input to the population.

TABLE 6-15

ENVIRONMENTAL ENERGY CONSUMPTION

FOR PARTICULATE CONTROL IN 1983

Coal Conversion	6.73%
No	0.14%
Yes	0.24%

7. DISCUSSION OF RESULTS

The estimates of environmental energy consumption determined in this study are evaluated in two respects. First, the results presented in this study are compared with the results of other published studies which deal with the same subject and with EPA estimates of the progress of regulatory activities. Second, an analysis of the availability of low sulfur western coal is compared with the requirements implicit in the study results.

7.1 Comparison with Other Studies

Comparison of the results of the present study with the work of others is rendered difficult by a number of factors; first, this study has dealt only with the fossil fuel, steam electric industry, while other studies generally include gas turbine and diesel components of the fossil fuel electricity-generating industry or aggregate fossil and nuclear industries. Second, our results have been projected to the year 1983, while other studies have reported results for 1977, 1981, and 1985 as well as for 1983. Finally, and most important, our results are based on the assumption of compliance with a variety of regulatory and control option scenarios rather than on projections of utility compliance plans with existing regulations.

In spite of these caveats, some comparison is useful. Table 7-1 is based on a multiple study comparison by Development Sciences, Inc. (DSI) (1975) to which we have added sample results from our study. The bases for the results of the present study which are closest to those of the other studies are:

- 1974 fossil fuel consumption by steam electric power plants is 15 quadrillion Btu,
- growth rate of 6.73 percent per year to a 1983 fossil fuel, steam electric energy consumption of 22 quadrillion Btu,
- minimum coal conversion as defined in previous sections,
- compliance with all present SO_2 regulations.

TABLE 7-1

COMPARISON OF ESTIMATES OF ENERGY CONSUMPTION FOR POLLUTION CONTROL

(trillion Btu)[a]

Study	Year	Power Plant Thermal Pollution Control	Power Plant Air Pollution Control
Development Sciences, Inc. (EPA)[b]	1977	86	103 - 342
	1983	205	282 - 406
	1983 (Fossil Only)	107	
Michigan	1985	250	800
Resource Planning Associates	1980	274	213
Economics of Clean Water (EPA)	1977	432	-
	1983	792	-
Present Study[c]	1983	88	1078 (Sulfur Dioxide) 44 (Particulate)

[a] Excluding energy for fabrication and installation of equipment.

[b] Draft subject to revision.

[c] See text for assumptions on which present study results are based.

- SO_2 compliance achieved by means of scrubbers and low sulfur fuel only (that is, no coal washing), and
- thermal pollution control based on Scenario No. 1, which uses EPA estimates for key parameters.

ERT estimates of power plant thermal pollution control appear to be reasonably consistent with the other estimates. The ERT figure of 88 trillion Btu in 1983 is based on fossil fuel, steam electric plants only. A comparable energy requirement might be expected to arise from the nuclear portion of the industry in 1983, as in the DSI results.

The ERT results for air pollution control, which arise mainly from sulfur dioxide control requirements, are a factor of two or more larger than other study results. We suspect the reason for this is that our requirement of compliance with all present regulations is more stringent than compliance assumptions used in some or all of the other studies.

7.2 Comparison with EPA Expected Regulatory Activity

One method of comparing the results of this study with other available data is to check it with the expectations of the EPA. The most useful comparison available is to replace the control system scenarios with the mix of control systems expected by the EPA. Table 7-2 uses the mix of control systems expected for 1980 and 1985 [TBS, 1976]. The energy consumptions developed in this study for unit processes (see Table 3-2) have been imposed on that control system mix. The total energy consumption for environmental controls for SO_2 and particulates is then compared to the EPA expected total energy production to derive percentages. Because of the high reliance on coal blending in the EPA mix of control systems, the resultant percentages of energy consumption probably relate most directly to this study's Scenario 3.S. The results of Scenario 3.S (Table 6-2) show 3.4 percent as the "most likely" and 2.5 percent as the low value for energy consumption in 1983. These compare favorably with the EPA-based values in Table 7-2 even though the EPA-based results are for coal units only. Because this study's unit process energy consumption was used, we can conclude that Scenario 3.S is fairly comparable to EPA's expectations of the control system mix.

TABLE 7-2

EXPECTED ENVIRONMENTAL ENERGY CONSUMPTION USING THE EPA MIX OF CONTROL SYSTEMS[a]

Control Systems	Percent Energy Consumption This Study "Most Likely"	Energy Consumption for Environmental Control (millions of kilowatts) 1980	1980 with SCS[b]	1985
Scrubbers	4.0	0.87	0.10	0.87
Electrostatic Precipitators	0.3	0.13	0.11	0.13
Scrubbers and Precipitators	4.3	2.65	1.69	4.13
Import Low Sulfur Coal	4.0	1.22	1.98	2.79
Coal Washing	7.0	0.58	0.08	0.58
Coal Blending	1.0	0.29	0.04	0.29
Total		5.74	4.00	8.79
Total Energy Production		262.6	262.6	332.9
Precentage of Total Used for Environmental Control		2.19	1.52	2.64

[a] Based on coverage assumptions for COAL UNITS ONLY [TBS, 1976].

[b] Supplemental Control Systems employed by units responsible for 50 percent or more of the pollutants in their impact regions. SCS is assumed only temporary and not allowable in 1985.

Another comparison which can be made is for the supplementary control system (SCS) option. The EPA option for SCS in 1980 allows all plants with responsibility for 50 percent or more of the pollutants in their impact regions to utilize SCS. The SCS option would not, however, be available in 1985. Table 7-2 shows a 0.67 percent reduction in environmental energy consumption if SCS is used. This study's results show a similar 0.5 percent reduction when the SCS (E) option is used in Scenario 3.S. There is reasonable agreement about the effect of SCS on the mix of control systems.

7.3 Low Sulfur Western Coal Availability

There are several ways to check the realism of the various control strategies for SO_2 implied by scenarios selected. The ability of the railroad system to transport coal or the ability of the scrubber vendor industry to supply scrubbers are two such methods. Even more critical, however, are the large quantities of low sulfur western coal (LSWC) needed to achieve emission rates compatible with the regulatory scenarios. The projected 1983 LSWC demand associated with each scenario has been calculated for purposes of comparison with expected supplies. The estimates (presented in Table 7-3) are conservative in several respects. First, Region A coal plants with high sulfur complying fuels are assumed to use the indigenous low sulfur coals (0.3-1.0 percent) when, in fact, fairly substantial supplies of somewhat higher sulfur coals are available within this geographic area. Second, the 1983 plant population which served as the basis for the fuel consumption estimates reflects a high (6.73 percent per year) assumed growth rate for the national population of fossil fuel, steam electric generating plants. In addition, it has been assumed that all new oil-burning plants from this population that are capable of conversion to coal have effected this conversion by 1983.

Equal amounts of LSWC are calculated for Scenarios 1.S and 2.S; Btu losses incurred through coal washing are not considered. For this reason, actual consumption values for the coal-washing scenario (2.S) are probably somewhat higher than those for the scrubbing scenario (1.S).

TABLE 7-3

IMPLIED LOW SULFUR WESTERN COAL CONSUMPTION FOR THREE SO_2 REGULATORY SCENARIOS - 1983[a]

Scenario	Category	Low Sulfur Western Coal Consumption (millions of tons) AQS[c]	All[d]
1.S or 2.S[b]	Plants requiring LSWC	96.9	318.8
	Plants not requiring LSWC[e]	120.4	43.7
	Converted oil plants	36.7	95.3
	Total	254.0	457.8
3.S[f]	Plants requiring LSWC	247.6	397.9
	Plants not requiring LSWC[e]	120.4	43.7
	Converted oil plants	36.7	95.3
	Total	404.7	536.9

[a] Based on assumed generating capacity growth rate of 6.73% per year from 1974 with coal conversion wherever possible for new plants.

[b] Both scenarios require the same amounts of LSWC. Assumed capacity factor of 0.6; LSWC energy content of 9,235 Btu/lb.

[c] Air quality standards (AQS) - Both the primary and secondary national ambient air quality standards are met.

[d] All present regulations are met including: AQS, new source performance standards, state implementation plans and prevention of significant deterioration.

[e] These are coal-fired plants in coal Region A (the west) which do not need to use LSWC to meet the standards but which are assumed to do so out of convenience.

[f] Assumed capacity factor of 0.6; LSWC energy content of 9,235 Btu/lb; high sulfur coal energy content of 12,000 Btu/lb; high to low sulfur coal blend mix 2:1 by weight.

LSWC use is greatest for the blending scenario (3.S). A 2:1 mixture by weight of high to low sulfur coal has been assumed. In view of the high cost and energy requirements associated with transport of western coal to Regions B and C, it is possible that alternative control measures would be adopted before fuel blending if a high proportion of LSWC is required. Even with only one-third western coal used for blending, the total Scenario 3.S LSWC consumption estimate is substantially higher than that for either of the other two scenarios. This result reflects the fact that about 42 percent of the total coal plant capacity is affected under the assumptions used in developing the blending scenario.

Fuel energy contents assumed for low sulfur and high sulfur coal are 9,235 and 12,000 Btu/lb, respectively. A capacity factor of 0.6 and an average plant coal-electricity efficiency of 35 percent were also used in the calculations. For any segment of the total generating capacity involving the use of LSWC to attain air quality goals, the demand was calculated by:

$$\text{tons coal per year} = \text{Mw (electricity)} \times \frac{\text{Mw (coal)}}{0.35 \text{ Mw (electricity)}} \times \frac{8{,}760 \text{ hr}}{\text{year}} \times 10^3 \frac{\text{kw}}{\text{Mw}} \times \frac{3{,}413 \text{ Btu}}{\text{kw-hr}} \times \frac{\text{ton}}{2{,}000 \text{ lb}} \times \frac{\text{lb}}{9{,}235 \text{ Btu}} \times 0.6 \text{ [capacity factor]}$$

Projected Availability

The U. S. has vast reserves of recoverable low sulfur coal, most of which is in the western states. A Bureau of Mines study (BOM, 1974) reports approximately 70 billion tons of western coal with sulfur content at or below 1 percent. The extent of these known reserves is great enough to quell concerns as to the potential availability of such coal for a period of many years. However, any attempt to forecast actual mining capacity for a specific time period is subject to a number of crucial qualifications. The primary contingencies in this regard are: (1) time required for resolution of environmental (reclamation) policies; (2) land leasing and licensing requirements; (3) comparative costs of LSWC with other coals from the standpoint of both Btu requirements and transportation charges; (4) availability of the necessary

transportation facilities; and (5) the rate of development of effective economically feasible alternate technologies for sulfur removal.

Projections of LSWC availability in future years vary according to the assumptions made regarding these considerations. Forecasts developed from data compiled by the U. S. Bureau of Mines (1975) reflect the position that there will be no "unduly restrictive" legislative controls on strip mining, that "reasonably liberal" policies for leasing public coal lands will be enacted and that sulfur emission regulations will be modified where they exceed ambient air quality requirements. Also assumed is an increasing demand for western control paralleled by advances in viable control technologies. Implicit in these projections is the premise that greater energy self-sufficiency will continue to be a national goal and that the requisite commitment of capital to achieve this objective will be forthcoming.

With these qualifications, total U. S.-wide coal mining capacities expected by 1980 and 1985, respectively, are estimated at 833 and 1,043 million tons. The corresponding values projected for availability to the national electric utility industry are 550 and 710 million tons. A significant expansion of capacity in the west (roughly equivalent to Region A in this study) is forecast during this period: estimates for this region are 299 million tons by 1980 and 363 million tons by 1985. Total western coal use for utilities in 1983 is expected to reach 211 million tons with about 96 percent of this supply distributed evenly among plants in the western and central regions of the country. Data derived from the FEA Coal Task Force (Project Independence) and presented in a Draft Final Report to the U. S. EPA (DSI, 1975) lead to an estimated 1983 power plant consumption of coal in the sulfur range below 1.5 percent of about 360 million tons.

In addition, the FEA Western Coal Development Monitoring System (FEA, 1976) is a source of coal availability data. Its projections are that 443.6 million tons per year will be produced in 1983 in the nine western states which supply low sulfur coal. Subtracting 152 million tons for non-utility consumption, a total of 292 million tons would be available. Although this reference does not segregate the coal by sulfur content, we can infer from the area that this projection leads to even more availability of low sulfur coal than the other two cited above.

Comparison

A comparison can now be made of the coal requirements for the different control system scenarios and the availability of LSWC. Figure 7-1 provides a visual comparison to the scenario requirements set out in Table 7-3 and the three projections of 1983 LSWC availability. This comparison shows, for instance, that, if the Bureau of Mines projection is chosen, it is possible to attain the air quality standards if coal conversion does not occur and scenario 1.S or 2.S is chosen for SO_2 controls. On the other hand, if one chooses to meet all present SO_2 regulations, it is necessary to ensure that the FEA coal projection is met. Even then coal conversion of oil plants could not be accomplished if scenario 3.S (coal blending) were chosen. Many important policy contingencies, such as mine tract leasing and strip mine regulations, are inherent parts of the coal availability.

The above examples are provided to show use of the figure and neglects such things as the availability of low sulfur coal in the eastern U. S. This study has not sought to establish a control scenario based on coal availability but has focused on the energy consumption of several control scenarios. The interrelationship is a complex one and is a good subject for future study. Suffice it to say that the various scenario results are within the range of available coal in 1983.

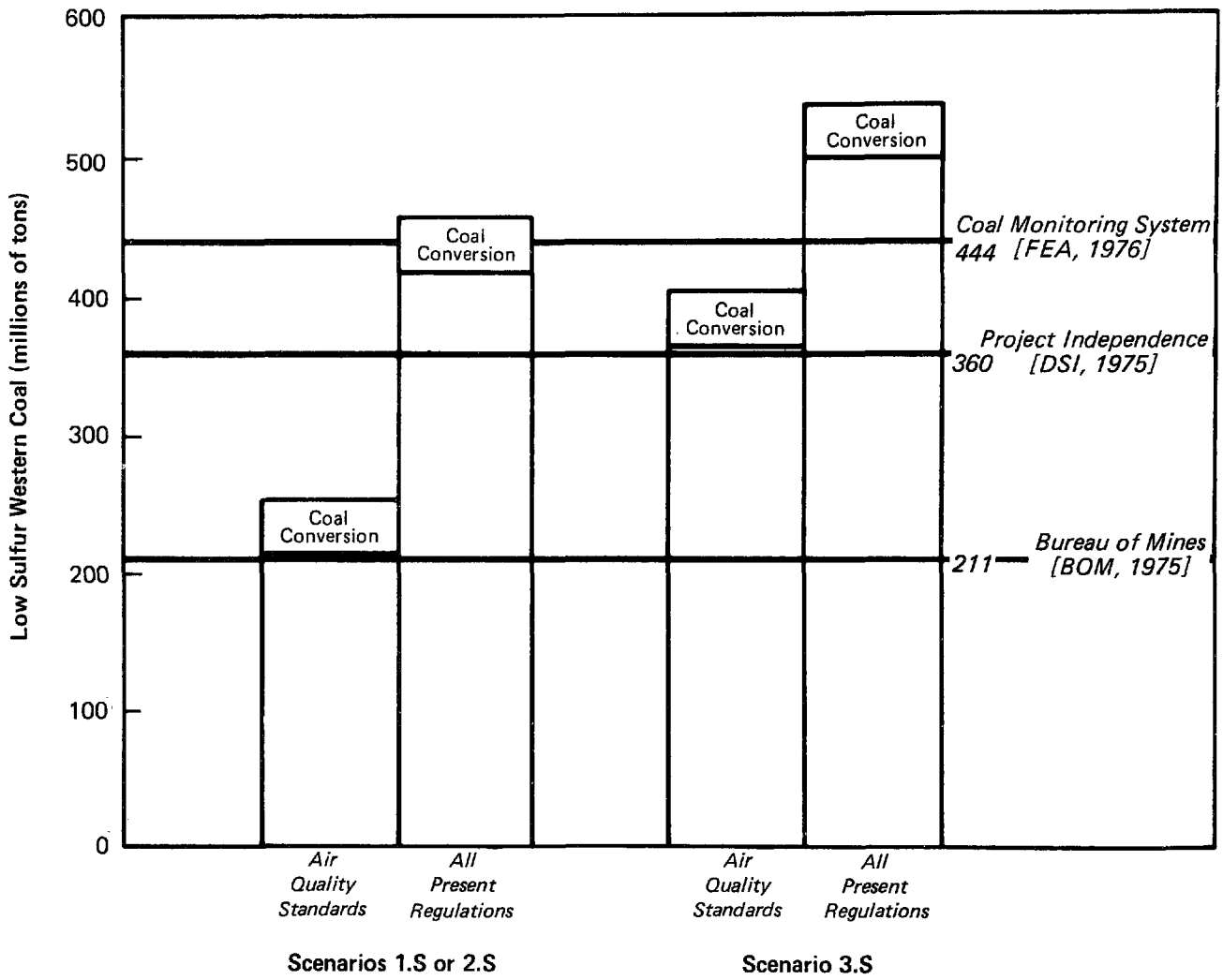

Figure 7-1 Comparison of Scenario Coal Requirements and Projected Coal Availability in 1983

REFERENCES

[Aghassi, 1975] William J. Aghassi and Paul N. Cheremisinoff, "NOx Control in Central Station Boilers," Power Engineering, June 1975.

[ADL, 1968] Arthur D. Little, Inc., "A Study of Process Costs and Economics of Pyrite-Coal Utilization", A Report to Consumer Protection and Evnironmental Health Service, Contract No. PH86-27-258, March 1968.

[ALA, 1974] American Lung Association, "Controlling Air Pollution," 1974.

[Albrecht, 1975] P. F. Albrecht and J. A. Lieberman, General Electric Co., "Reliability of Flue Gas Desulfurization Systems," Power Engineering, June 1975.

[Battelle, 1973] Battelle Columbus and Pacific Northwest Laboratories, "Environmental Considerations in Future Energy Growth," Vol. I: Fuel/Energy Systems: Technical Summaries and Associated Environmental Burdens. Columbus, Ohio, 1973.

[Bechtel, 1968] Bechtel Corporation, "Process Costs and Economics of Pyrite-Coal Utilization," A Report to National Air Pollution Control Administration, Contract No. PH86-27-224, December 1968.

[BOM, 1974] Bureau of Mines, "Assessment of the Impact of Air Quality Requirements on Coal in 1975, 1977, and 1980", Division of Fossil Fuels, Mineral Supplies, January, 1974.

[BOM, 1974] Bureau of Mines, "Potential Solid Waste Generation and Disposal From Lime and Limestone Desulfurization Processes," Bureau of Mines Information Circular #8633, 1974.

[BOM, 1975] Bureau of Mines, "Bituminuous Coal and Lignite Distribution," Mineral Industry Surveys, April, 1975.

[BOM, 1976] Bureau of Mines, "Effects of Air Quality Requirements on Coal Supply" Contract J0155164, May, 1976.

[Botts, 1972] W. V. Botts and R. D. Oldenkamp, "The Molten Carbonate Process for SO_2 Removal from Stack Gases: Process Description, Economics, and Pilot Plant Design," presented at 65th Annual Meeting of Air Pollution Control Association, Miami Beach, Florida, June 1972.

[Bruch, 1976] Herbert W. Bruch, National Petroleum Refining Association, private communication, January 1976.

[CA, 1975a] "How multiple technologies approach coal desulfurization problem," Coal Age, June 1975.

[CA, 1975b] "The yardstick of productivity... Is it high tons per man-day, or is it low cost per ton?," Coal Age, July 1975.

[CEQ, 1973] "Energy and the Environment - Electric Power," Council on Environmental Quality, August 1973.

[Chemico, 1971] Chemico, "The High Sulfur Combustor," Final Report to Division of Process Control Engineering, National Air Pollution Control Administration, Contract No. CPA22-69-151, February 1971.

[Christensen, 1973] R. I. Christensen et al, Chevron Research Company, "Low Sulfur Products from Middle East Crudes," presented at the National Petroleum Refiners Association Annual Meeting, April 1973.

[Crawford, 1975] A. R. Crawford et al, Exxon Research and Engineering Company, "The Effect of Combustion Modification on Pollutants and Equipment Performance of Power Generation Equipment," prepared for a Symposium on Stationary Source Combustion, September 1975.

[Deurbrouck, 1974] A. W. Deurbrouck and P. S. Jacobsen, "Coal Cleaning - State of the Art," Pittsburgh Energy Research Center, U. S. Department of the Interior, Bureau of Mines, October, 1974.

[DOT-EPA, 1975] "Study of Potential for Motor Vehicle Fuel Economy Improvement," Truck and Bus Panel Report, prepared by the U. S. Department of Transportation and the U. S. Environmental Protection Agency, January 1975.

[DSI, 1975] Development Sciences Inc., East Sandwich, Mass., Draft Final Report, EPA Contract 68-01-2498, "First-Order Estimates of Potential Energy Consumption Implications of Federal Air and Water Quality Pollution Control Standards for Stationary Sources," July, 1975.

[Dynatech, 1969] Dynatech R/D Company, Cambridge, Massachusetts, "A Survey of Alternate Methods for Cooling Condenser Discharge Water - Large Scale Heat Rejection Equipment," for Water Quality Office, EPA, July 1969.

[Ellis, 1975] Dr. H. M. Ellis et al, Enviroplan Inc., "Predicting SO_2 Impact from 1000 MW Power Plant," Power, July 1975.

[Energy, 1975] "Energy Alternatives: A Comparative Analysis," prepared for CEQ, ERDA, FEA, FPC, DOI, NSF, May 1975.

[EPA, 1973] Statements of Robert W. Fri, acting administrator of EPA, in response to questions from the Joint Congressional Hearings on Conservation and Efficient Use of Energy, June 1973.

[EPA, 1974a] "Development Document for Effluent Limitations Guidelines and New Source Performance Standards for the Steam Electric Power Generating Point Source Category," U. S. Environmental Protection Agency, October 1974.

[EPA, 1974b] "Second Annual Report to Congress - Resource Recovery and Source Reduction," U.S. Environmental Protection Agency, Washington, D. C., 1974.

[EPA, 1975a] "Report to Congress on Control of Sulfur Oxides," U. S. Environmental Protection Agency, February 1975.

[EPA, 1975b] New Source Performance Standards for Fossil Fuel-Fired Steam Generators, EPA Response to Remand, Federal Register, Volume 40, No. 176, September 10, 1975.

[ER, 1975] "Fluidized-Bed Combustion Seen Less Costly Alternative to Scrubbers," Environment Reporter, 1975.

[ERT, 1975] "An Evaluation of Sulfur Dioxide Control Requirements for Electric Power Plants," P-1547B, Environmental Research & Technology, Inc., April 1975.

[FEA, 1976] "Western Coal Development Monitoring System", Federal Energy Administration Monthly Summary, December, 1976.

[Ford, 1975] "The Energy Conservation Papers," The Energy Policy Project of the Ford Foundation, Ballinger Publishing Company, Cambridge, Massachusetts, 1975.

[FPC, 1975] "The Effect of Environmental Legislation on Fuels Availability for Electric Power Generation," Alexander Gakner et al, Federal Power Commission, Presented at the 37th Annual Meeting, American Power Conference, Chicago, Illinois, April 21-23, 1975.

[Haller, 1975] Gary L. Haller and Paul C. Nordine, "Wet Lime and Limestone Flue Gas Desulfurization - Estimates of Energy, Environmental and Economic Costs", submitted to Commerce Technical Advisory Board Panel on SO_2 Control Technologies, February 1975.

[Hammond, 1975] Allen L. Hammond, "Cleaning up Coal: A New Entry in the Energy Sweepstakes," Science, Volume 189, 11 July 1975.

[Herendeen, 1974] Robert A. Herendeen and Clark W. Bullard III, "Energy Cost of Goods and Services, 1963 and 1967," Center for Advanced Computation, University of Illinois at Urbana - Champaign, Urbana, Illinois, November, 1974.

[Hirst, 1973] Eric Hirst, "The Energy Cost of Pollution Control," Environment, Volume 15, No. 8, October 1973.

[Hittman, 1974] "Environmental Impacts, Efficiency, and Cost of Energy Supply and End Use," Volume I, Hittman Associates, Inc., November 1974.

[HP, 1974] 1974 Refining Process Handbook, Hydrocarbon Processing, September 1974.

[Jimeson, 1973] Robert M. Jimeson and L. William Richardson, "Census of Oil Desulfurization to Achieve Environmental Goals," presented at the 4th Joint Meeting with the CSChE - AIChE, September 1973.

[Jimeson, 1975] Robert M. Jimeson, "Environmental Regulation - It's Not Nice to Fool the Power Plants," presented at the 4th National Symposium of ASME, March 1975.

[Jonakin, 1975] J. Jonakin, Combustion Engineering, Inc., "Solving the SO_2 problem - where we stand with applications and costs," Coal Age, May 1975.

[Lovell, 1975] "Sulfur Reduction Technologies in Coals by Mechanical Beneficiation," Harold L. Lovell, The Pennsylvania State University, College of Earth and Mineral Sciences, February 1975.

[Minerals, 1973] 1973 Bureau of Mines Minerals Yearbook: Lime, U. S. Department of the Interior, 1973.

[Mitre, 1974] "An Interpretative Compilation of EPA Studies Related to Coal Quality and Cleanability," The Mitre Corporation, May 1974.

[NCA, 1974] National Coal Association, "Steam-Electric Plant Factors/1974 Edition," Washington, D. C., 1974.

[NERA, 1975] Lewis J. Perl, Joe D. Pace, "The Costs of Reducing SO2 Emissions from Electric Generating Plants," National Economic Research Associates, Inc., April 1975.

[OGJ, 1975] Oil and Gas Journal, Annual Refining Report, 7 April 1975.

[Oglesby, 1970] "A Manual of Electrostatic Precipitator Technology," Part II: Application Areas, S. Oglesby and G. B. Nichols, Southern Research Institute, August 1970.

[PEDCo, 1975a] "Flue Gas Desulfurization Process Cost Assessment," PEDCo-Environmental Specialists, Inc., May 1975.

[Perry, 1974] Harry Perry, "Coal Conversion Technology," Chemical Engineering, 22 July, 1974.

[Power, 1975] Power, 1975 Annual Plant Design Report, November 1975.

[Rice, 1970] R. A. Rice, "System Energy as a Factor in Considering Future Transportation," a paper presented at the ASME winter annual meeting, November 29-December 3, 1970.

[Stern, 1968] Arthur C. Stern, ed., "Air Pollution," Volume III, Sources of Air Pollution and Their Control, Academic Press, New York, 1968.

[TBS, 1974] Temple, Barker and Sloan, Inc., "Economic Analysis of Effluent Guidelines Steam Electric Power Plants," PB-239, 315, December, 1974.

[TBS, 1976] Temple, Barker and Sloan, Inc., "Economic and Financial Impacts of Federal Air and Water Pollution Controls on the Electric Utility Industry", May, 1976.

[Teller, 1972] Aaron Teller, "Air Pollution Control," Chemical Engineering Deskbook Issue, 9 May 1972.

[UWAG, 1974] Utility Water Act Group, "Comments on EPA's Proposed 316(a) Regulations and Draft Guidance Manual," June 26, 1974.

APPENDIX A

ERT SAMPLE PLANT POPULATION

APPENDIX A

ERT SAMPLE PLANT POPULATION

The sample of power plants used for determining the compliance with sulfur-in-fuel limits was also evaluated with respect to the application of environmental controls in 1974. This evaluation was primarily achieved by reviewing the information contained in the Federal Power Commission (FPC) Form 67, "STEAM-ELECTRIC PLANT AIR AND WATER QUALITY CONTROL DATA FOR THE YEAR ENDED DECEMBER 31, 1974," for each plant. In addition, the energy consumption associated with the application of these environmental controls was determined by circulating a questionnaire to the staff of each of the power plants in the sample population.

To facilitate the completion and return of these questionnaires, all previously available information for the plants was entered by the ERT staff prior to their mailing. Exhibit A-1 is a copy of the questionnaire, with asterisks (*) indicating those categories of information completed by ERT prior to distribution to the power plants. A total of 66 questionnaires was returned to ERT. The sample size for any specific analysis could be larger, however, based on the FPC data.

Capacity factors in 1974 (Mwc available as a percent of Mwc at rated capacity) were available for 84 plants. The capacity factors were stratified into three plant size groupings: 1) $\leq$400 Mw; 2) 401-800 Mw; and 3) >800 Mw. The average capacity factors for these three groupings were 53.6%, 59.9%, and 57.7%, respectively. The capacity factor data indicates that there is no strict correlation between plant size and baseload conditions for the sample population in 1974. This is due to both historical unit size characteristics and past siting policy.

The distribution of particulate control equipment by fuel type for the sample plant population of 88 plants is shown in Table A-1. For the control of particulate emissions, the sample reported an average of 0.30% additional energy consumption for the operation of electrostatic precipitators and an average of 0.10% additional energy consumption for the operation of combined electrostatic precipitators and mechanical collectors. The range of the responses was from 0.04 to

TABLE A-1

DISTRIBUTION OF PARTICULATE CONTROL EQUIPMENT BY FUEL TYPE FOR THE SAMPLE PLANT POPULATION

		Particulate Control Equipment (percent)				
Fuel Type	Percent of Sample	None	Mechanical Collector	Combination Mechanical-Electrostatic Precipitator	Electrostatic Precipitator	Wet Scrubber
Gas Burning	0.8	100.0	-	-	-	-
Oil Burning	12.6	40.7	38.8	-	20.5	-
Coal Burning	13.2	3.1	4.1	17.3	75.5	-
Gas & Oil	21.1	50.1	30.1	13.5	6.3	-
Gas & Coal	2.2	-	-	65.4	34.6	-
Oil & Coal	39.9	3.8	5.1	16.7	72.5	1.9
Gas, Oil, & Coal	10.2	4.7	15.4	-	79.9	-
	100.0					

2.27% for the electrostatic precipitators and from 0.10 to 0.96% for the combination units. The average additional energy consumption reported for multiple cyclones was 0.01%. Three units were using wet scrubbers for particulate control, with an average additional energy consumption of 4.51% and a range of 4.12 to 5.14%. In addition, two plants reported an additional percent energy consumption of 0.34 to 0.86% for the scrubber water supply systems. Related to the operation of particulate control equipment is the transport of the collected ash. Thirty-one plants reported energy requirements for ash disposal. The average additional energy consumption was 0.15%, with a range of 0.00 to 1.15%.

There was a limited questionnaire response with respect to sulfur dioxide control technologies. Six plants reported the use of magnesium oxide as a fuel additive. The amount used ranged from 80 to 1400 tons per year. Reported transport distances for the magnesium oxide ranged from 110 to 650 miles, with transport provided by both truck and rail. One flue gas desulfurization (FGD) system was reported going on-line in 1975. This system required 0.076 tons of lime per ton of coal burned. The lime was transported 200 miles by rail. The energy consumption reported for the operation of the FGD system was 2.13% exclusive of reheat.

Four plants reported the use of nitrogen oxide control technologies, with one system going on-line in 1976. All plants reported using flue gas recirculation systems. The average additional energy consumption was 0.47%, with a range of 0.24 to 0.86%.

Seventeen plants reported energy consumption requirements for chemical waste treatment (waste water). The additional energy consumption for chemical waste treatment ranged from 0.00 to 0.06%. The additional energy consumption for Best Practical Control Technology Available (BPCTA) ranged from 0.01 to 0.06%.

The distribution of waste heat control systems for the sample population of 88 plants is shown in Table A-2. The average Brake Horse Power (BHP) per plant for once-through fresh cooling was 3,148. The average BHP's for mechanical draft towers and natural draft towers were 4,082 and 7,156, respectively. In addition, an average BHP per plant of 1,518 was reported for the tower fan system of mechanical draft towers.

TABLE A-2

WASTE HEAT CONTROL FOR THE SAMPLE PLANT POPULATION

	Cooling System Mode	Percent of Sample	Average Cooling Water Flow Rate thru Condenser (CFS)	Average Temp. Rise (°F)	Cooling Water Power Consumption			Tower Fan System	
					Average MwH per plant	Average BHP per plant	Average Number of pumps per plant	Average BHP per plant	Average Percent utilization of fans
1.	Once-through Fresh	52.11	229	16	12,584	3,148	7	1,573[a]	35[a]
2.	Once-through Saline	23.34	298	15	13,633	1,998	6	-	-
3.	Natural Draft Tower	11.94	500	27	40,000[b]	7,156	4	-	-
4.	Mechanical Draft Tower	6.81	196	18	-	4,082	5	1,518	93
5.	Cooling Pond	4.38	382	16	-	2,219	5	-	-
6.	Cooling Lake	1.42	549	13	-	900	4	-	-

a = Denotes once-through systems which use mechanical draft towers for supplemental cooling

b = Only one plant reporting

With respect to the use of western coal (Region A) in Region B, three plants in Region B reported partial use of western coal. The distance for transport of the coal ranged from 1,200 to 2,000 miles.

EXHIBIT A-1

ENERGY REQUIREMENTS QUESTIONNAIRE FOR AIR & WATER POLLUTION CONTROL

Please answer all questions as completely as possible. Where additional space is required, please use the back of the questionnaire and specify the item being answered.

1. Plant Identification Information

1a. Company Name: *

1b. Plant Name: *

1c. Plant Location: *

2. Fuel Consumption Data: Please specify individual units and differing modes of transport where necessary.

	Fuel Type(s)	1974 Total Consumption	Sulfur Content (%)	Point of Origin City & State of mine or port	Distance from Plant (miles)	Modes* of Transport
	A	B	C	D	E	F
2a.	*	*	*	*		
2b.						
2c.						

*Modes of Transport: (U)-Unit Train; (M)-Mixed Train; (T)-Truck; (B)-Barge (P)-Pipeline; (C)-Conveyor; (MM)-Mine Mouth Plant; (S)-Ship

3. Plant Operating Characteristics: Please include any units planned for entry into service before 1984 as well as operational units.

	UNITS	1	2	3	4	5
3a.	1974 Rated Generation Capacity, Mw	* →				
3b.	1974 Capacity Factor, %	* →				
3c.	Unit Heat Rate, Btu/KWH					
3d.	Unit Efficiency, %	* →				
3e.	Fuel Rate & Fuel Type (lb/hr, ft^3/hr, etc.)	* →				
3f.	Boiler Manufacturer#	* →				
3g.	Boiler Type##	* →				
3h.	Date of Service	* →				
3i.	Turbine-Condenser Units served by each boiler unit	* →				

Boiler Manufacturer: CE-Combustion Engineering; BW-Babcock & Wilcox; FW-Foster Wheeler; RS-Riley Stoker; EC-Erie City Iron Works; OT-other.

Boiler Type: T-Tangential; F-Front-Fired; O-Opposed-Fired; S-Stoker; C-Cyclone; FB-Fluidized Bed; OT-other.

4. Turbine Condenser Information: The purpose of the following questions is to estimate the capacity loss and increased fuel usage associated with the retrofitting of closed-cycle cooling systems to units presently employing once-through cooling. Using nomographs developed by various sources, one can compute a new turbine backpressure as a function of a given wet bulb temperature, approach, terminal temperature difference, and tower range. Subtracting the design backpressure from this new value will give the backpressure increase due to closed-cycle cooling. If the average change in unit heat rate per 1" Hg abs. change in backpressure is known, then one can compute the unit heat rate loss due to the increased turbine backpressure. Dividing this calculated unit heat loss by the unit heat rate will give the percent capacity loss due to closed-cycle retrofitting.

The following definitions should be of help in answering these questions:

1. TEMPERATURE RISE: the difference in temperature between the hot water leaving the condenser and the cold water entering the condenser.
2. TERMINAL TEMPERATURE DIFFERENCE (TTD): the difference between the steam saturation temperature and the hot water temperature leaving the condenser. The TTD is typically between 5 and 10°F.

	TURBINE CONDENSER UNITS	1	2	3
4a.	Cooling Water Flow Rate, cfs	*→		
4b.	Temperature Rise, °F.	*→		
4c.	Terminal Temperature Difference, °F.			
4d.	Design Turbine Backpressure, in. Hg abs.			
4e.	Average Change in Unit Heat Rate per 1" Hg abs. of Backpressure, %			

5. Energy Consumption for Particulate Control: please include all energy requirements for control equipment, ash removal, and ash disposal operations.

	PARTICULATE CONTROL UNITS	1	2	3	4
5a.	Status, oper. or planned (date)	* →			
5b.	Type*	* →			
5c.	Removal Efficiency, %	* →			
5d.	Power Consumption, Mw				
5e.	Pressure Drop, inches H_2O				

* Type: ESP-Electrostatic Precipitator; C-Cyclone; MC-Multiple Cyclone; SC-Spray Chamber; S-Scrubber; FF-Fabric Filter; OT-other, please specify.

5f. Ash Disposal, 1974 Quantity _____*_____ tons/year.

5g. What type of disposal is employed (ash pond, landfill, etc.)? _____*_____

5h. What are the energy requirements for this disposal operation? _____ KWH/yr.

5i. Where is the disposal site located? _____

5j. What is the distance from the plant? _____ miles.

5k. What is the mode of transport? _____

5l. What quantity of ash per year is used in other processes such as fly ash concrete or pelletized aggregate? _____*_____ tons/year.

6. Energy Consumption for Sulfur Dioxide Control: please include all requirements for control equipment, sulfur dioxide control chemicals, waste disposal, and regenerative processes.

	SULFUR DIOXIDE CONTROL UNITS	1	2	3
6a.	Status, oper. or planned (date)	* →		
6b.	Type of unit	* →		
6c.	Removal Efficiency, %	* →		
6d.	Reheat, Btu/hour			
6e.	Pressure Drop, inches H_2O			
6f.	Power Consumption, Mw			
or 6g.	Fans, bhp			
6h.	Pumps, bhp			

6i. What chemicals are utilized for the control of sulfur dioxide? _____ *

6j. What quantity of these chemicals are required (in tons/year or tons per ton of fuel consumed)? _____

6k. Where do these chemicals come from (city & State)? _____

6l. What is the transport distance required for these chemicals? _____ miles

6m. What is the mode of transport? _____

Waste Disposal

6n. What marketable products are created (sulfur, acid)? _____ * _____

6o. What quantity of this product is sold? _____ tons/year.

6p. What additional energy requirements are there to prepare this marketable product (Btu/ton)? _____

6q. What quantity of sludges requiring disposal are generated? _____ tons/year.

6r. What is the distance from the plant to the disposal site? _____ miles.

6s. What type of disposal facility is used (landfill, ponding)? _____

6t. What is the mode of transport to the disposal facility? _____

6u. If a regenerative process is utilized, what is its energy requirement? _____ KWH/ton

6v. What type and quantity of fuels are utilized? _____

6w. What quantity of electricity is utilized? _____ KWH

7. Energy Consumption for Nitrogen Oxides Control: please include all energy requirements for control equipment or combustion modifications.

	NITROGEN OXIDES CONTROL UNITS	1	2	3
7a.	Status, oper. or planned (date)			
7b.	Type*			
7c.	Power Consumption, Mw			

* FGD-Flue Gas Recirculation; OFA-Over-Fire Air; BF-Bias Firing; if other please specify.

8. Energy Consumption Due to Chemical Waste Treatment:

8a. Please quantify and describe any energy requirements attributable to present chemical waste treatment. _____

_____

_____

8b. Has the design engineering for chemical effluent treatment system to meet 1977 BPCTA (Yes ____ No ____) or 1983 BATEA (Yes ____ No ____) been completed?

8c. What are the energy requirements for BPCTA? _____
" " " " " " BATEA? _____

Disposal of Sludge and Brine from Waste Water Treatment

8d. What quantity of this waste was generated in 1974? _____

8e. What quantity of this waste is estimated for 1983? _____

8f. What type of disposal is utilized (sludge pond, well, landfill)? _____

8g. What is the distance from the plant to the disposal site? _____ miles.

8h. What is the mode of transport (truck, pipeline)? _____

9. Energy Consumption of the Cooling Water System:

9a. What is the present status of the cooling system mode of operation:

	UNIT	1	2	3
9b	Status, oper. or planned (date)	* →		
9c	Surface discharge	↓		
9d	Diffuser			
9e	Cooling "pond"			
9f	Cooling "lake"			
9g	Spray canal or pond			
9h	Mechanical draft tower			
9i	Natural draft tower			
9j	Wet-dry cooling tower			

9k. For units which have a net generating capacity greater than or equal to 500 megawatts and were placed into service between January 2, 1970 and January 1, 1974, has either a 316(a) or 318(a) variance been requested Yes _____ No _____

9l. Has a 316(a) or 318(a) variance been requested for any unit placed or to be placed into service after January 1, 1974? Yes ____ No ____

9m. Will an exemption from cooling tower requirements (where applicable) based upon salt drift-land availability requirements (Section 423.13 (1) (5) of 1972 Water Act) be requested? Yes ____ No ____

9n. What was the power consumption for the flow of condenser cooling water for 1974? _____ KWH; or, what were the total number of pumps and the total bhp for these pumps? _____ bhp, _____ # of pumps.

9o. If cooling towers are used for closed cycle cooling, what is the design wet bulb temperature? ____ °F.

9p. If a cooling pond is used for closed-cycle cooling, is the cooling pond formed by an impoundment which impedes the flow of a navigable stream? Yes ____ No ____

9q. If mechanical draft towers are presently employed at the plant, what are the rated bhp of the tower's fan system and percent utilization of fan system per annual boiler operation? _____ bhp, _____ %.

10. Are there any other substantial energy consumption requirements in your plant due to environmental controls or regulations? If so, please explain: _____

_____

_____

_____

APPENDIX B

ENERGY CONSUMPTION MODELING

APPENDIX B

ENERGY CONSUMPTION MODELING

Estimates of future energy consumption for the control of sulfur dioxide were based on the application of a computer model which permitted analysis of regulatory options, control system options, coal conversion and varying industry growth rates. The computer modeling was achieved by the use of the computer program RIPPER-S, an acronym for "Regulatory Impact upon Power Plant Energy Requirements - Sulfur Dioxide." This program provides estimates, for designated future years, of the incremental energy consumption associated with a specific set of air quality regulations for the projected total national fossil fuel, steam electric power plant population. These estimates are based, in part, upon:

- the assumed composition of the existing and projected new fossil fuel power plant populations,
- an assumed annual growth rate for new plant electricity generation,
- the imposition of a specific set of air quality regulations, and
- the estimated incremental energy consumption associated with the application of a sulfur dioxide control technology.

The air quality regulations which can be imposed include:

- National Primary Ambient Air Quality Standards,
- Air Quality Standards (both Primary and Secondary standards),
- State Implementation Plans,
- New Source Performance Standards,
- Non-Deterioration Class II Requirements, and
- Best Available Control Technology (BACT).

The logic for RIPPER-MAIN is displayed in Exhibit B-1. This subprogram uses as its data base the megawatt capacity and complying fuel requirements from a sample population of 100 existing fossil fuel,

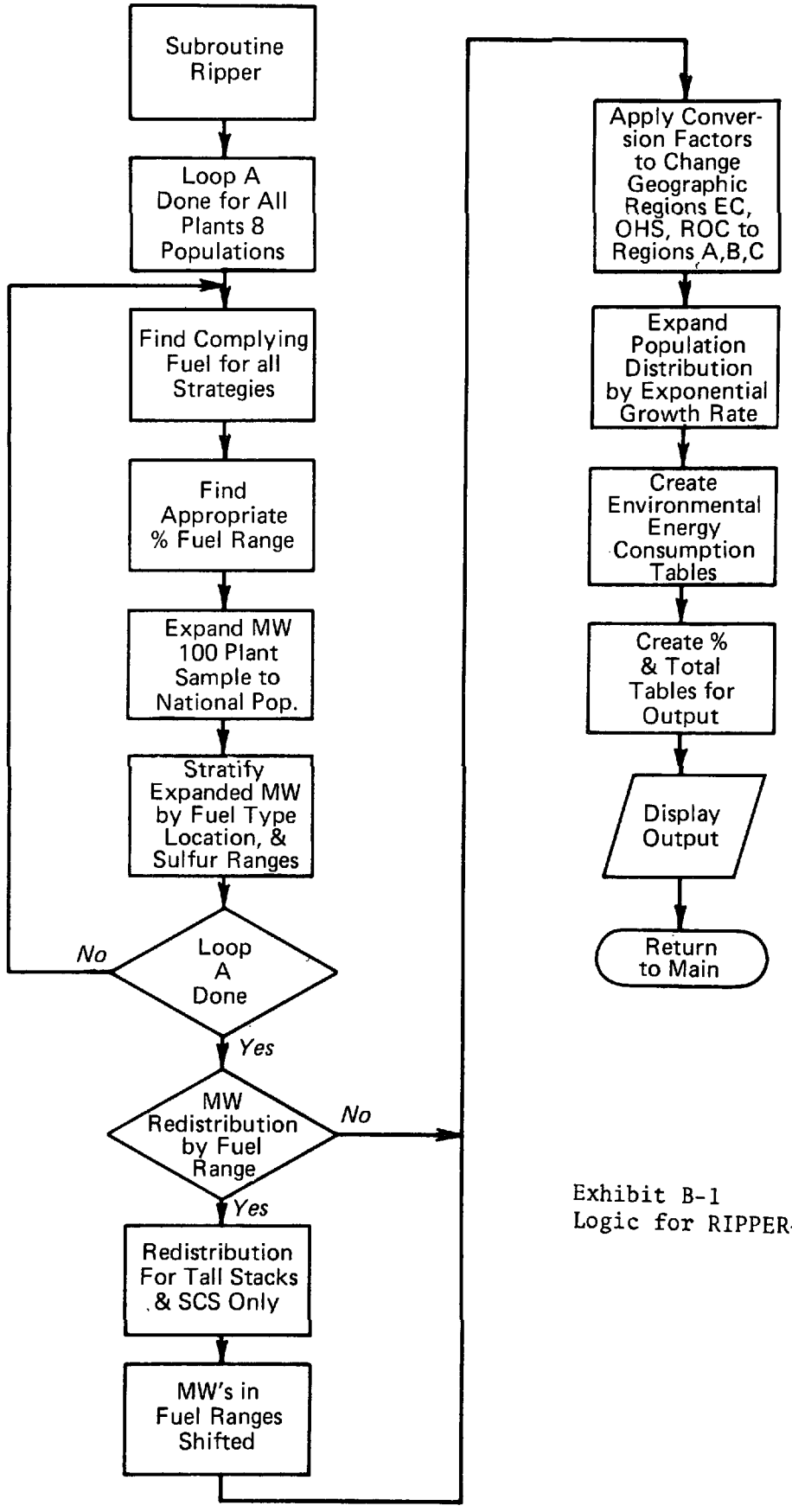

Exhibit B-1
Logic for RIPPER-Main

steam electric power plants. This sample population is stratified by location, by fuel type (including convertibility to coal for oil-fired plants), and by megawatt capacity to be representative of the total national population of fossil fuel, steam electric power plants.

The RIPPER-MAIN program assigns the 100 plant sample population to percent sulfur in fuel ranges based on a user-specified regulatory strategy. This division then constitutes a matrix of expected megawatt capacity by fuel type, location and percent sulfur content of the fuel (or its exhaust gas control equivalent) to meet a specific regulatory strategy. Additional input of the growth rate of energy production capacity, a base year for the 100 plant sample and a projection year are necessary.

Coal to oil conversion can also be specified independently for existing and new power plants.

The basic calculations using the megawatt capacity matrix are then performed in subroutine RIPPER.

In subroutine RIPPER (see Exhibit B-2), the complying fuel for the partitioned 100 plant sample is found, and the 100 plant megawatt capacities are expanded to the national population for each of the plants and the existing/new population distributions. The expanded (national) megawatt capacity matrix is then stratified by fuel type, location and percent sulfur ranges. This stratification is now equivalent to the Energy Consumption Matrices (ECM), which are input based on the control scenario selected. Redistribution of megawatt capacity by complying sulfur content of fuel is then performed if options tall stacks or SCS are to be used. Conversion factors are then applied to change the partitioning in the input geographic regions from East Coast (EC) states, Other High Sulfate (OHS) states, and Rest of Country (ROC) to regions A, B or C for output. The population is then expanded by an exponential growth rate. The environmental energy consumption is then computed by matrix multiplication of the ECM's and the expanded megawatt capacity matrices. This results in a national energy consumption for environmental controls based on the control scenario selected.

RIPPER then presents the various statistics generated according to the different stratification formats, for the base year and for the forecast year, as well as the estimated energy consumption to achieve compliance with the air quality regulations being evaluated.

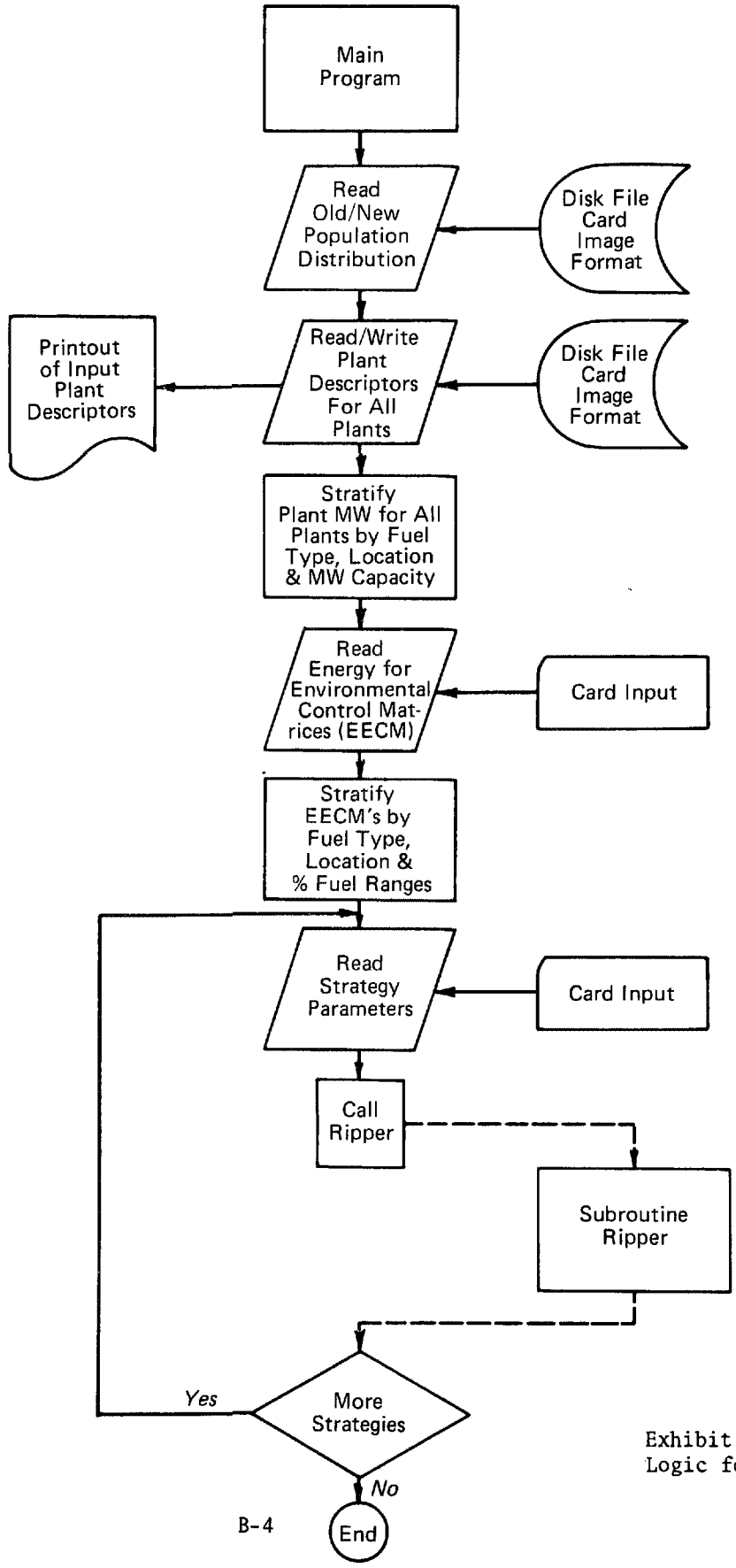

Exhibit B-2
Logic for RIPPER-Main

RIPPER Results

An example of results from the RIPPER model is presented in Exhibit B-3. The example results are estimates of total energy consumption for control of sulfur dioxide based on median estimates of energy use by specific control technologies in the following scenario:

Regulations - All present regulations (old plants - AQS and SIP, new plants - AQS, SIP, ND and NSPS)

Technology - Low sulfur western coal and scrubbers

Coal Conversion - New plants converted to coal

Growth Rate - High growth rate (0.0673)

Target Year - 1983

Exhibit B-3 is actually composed of two tables, a table of the population of electric generating plants projected to 1983 and a table of energy use for environmental control in 1983. The columns of both tables are labeled in complying fuel range as follows:

Fuel 1 - sulfur content of 0.1% to 0.3%

Fuel 2 - sulfur content of 0.3% to 1.0%

Fuel 3 - sulfur content of 1.0% to 3.0%

Fuel 4 - sulfur content of 3.0% to 10.0%

The rows are labeled in fuel types and geographic locations:

c - coal
o - oil
oc - oil to coal conversion
A - area where low sulfur western coal is indigenous
B - area adjacent to area "A"
C - rest of country

There is no population or energy use in the oil to coal conversion rows because the oil-coal conversion scenario used in this model run was "neither old or new oil plants converted to coal." Oil-fired plants,

POPULATION ENERGIES YEAR 1983

PROJECTED TOTAL POPULATION BY FUEL RANGE AND FUEL TYPE/REGION

	FUEL 1 %	FUEL 2 %	FUEL 3 %	FUEL 4 %
C -A	1.81	4.20	2.35	0.29
C -B	5.44	12.60	7.06	0.88
C -C	7.86	18.20	10.19	1.27
O -A	0.00	0.00	0.00	0.00
O -B	0.00	0.00	0.00	0.00
O -C	5.27	6.85	5.32	2.24
OC-A	0.43	0.55	0.00	0.00
OC-B	1.28	1.66	0.00	0.00
OC-C	1.85	2.40	0.00	0.00
SUM	23.93	46.47	24.91	4.68

POPULATION ENERGY FOR ENVIROMENTAL CONTROL-YEAR 1983

PROJECTED TOTAL POPULATION BY FUEL RANGE AND FUEL TYPE/REGION

	FUEL 1 %	FUEL 2 %	FUEL 3 %	FUEL 4 %
C -A	1.45	0.00	0.00	0.00
C -B	10.16	13.45	5.65	0.00
C -C	16.77	19.43	8.16	0.00
O -A	0.00	0.00	0.00	0.00
O -B	0.00	0.00	0.00	0.00
O -C	8.43	5.48	0.00	0.00
OC-A	0.34	0.00	0.00	0.00
OC-B	2.39	1.77	0.00	0.00
OC-C	3.95	2.56	0.00	0.00
SUM	43.50	42.70	13.81	0.00

RATIO= 3.75%

Exhibit B-3 An Example of Results from the RIPPER Model

which are all in area "C", account for about one quarter of the energy used for environmental control of sulfur control. The remaining seventy-five percent of energy use for environmental control is due to coal plants in all three regions and the lowest 3 complying fuel ranges. Total energy use is shown at the bottom of Exhibit B-3 as 3.75 percent of the total population.

Similar tables are available for all of the other scenarios discussed in the report. Results tables are also available for breakdowns of each scenario by location of energy use (pre-plant, in-plant and post-plant) and by type of fuel used (oil/gas, coal, electricity). A total of more than 2000 RIPPER result tables were generated and analyzed during preparation of this report.

```
                C     ********************
                C     SKELETON DRIVING PROGRAM FOR SUBROUTINE RIPPER
                C     VERSION 761209
                C     ********************
0001                  REAL       S(10,101),XNAME(20),NAMPEN( 2),NAMMX( 2,50),
                     XEPENMX(4,9,50),COLPEN(4,3),OILPEN(4)
0002                  INTEGER F(101)
0003                  INTEGER N(101),L(101),MW(101),BASEYR,FRSTYR,LASTYR,IX(101)
0004                  LOGICAL SGY(5,2),OILCO(2)
0005                  REAL T1A(16),T1B(16),T2A(16),T2B(16),T4A(16),T4B(16),T2E(16) ,
                     $ T2F(16)
0006                  COMMON/NAMER/XNAME
0007                  COMMON/PARAMS/GROWTH,BASEYR,FRSTYR,LASTYR,OILCO,SGY
0008                  COMMON/PENALS/NUMBER,NAMMX,EPENMX
0009                  COMMON/NPLANT/NP,N,L,F,MW,S,IX
0010                  COMMON/TABLE1/T1A,T1B
0011                  COMMON/TABLE2/T2A,T2B,        T2E,T2F
0012                  COMMON/TABLE4/T4A,T4B
0013                  REAL FR(3,3,2)
0014                  LOGICAL EC,OHS,ROC,REDIST(2)
0015                  COMMON/PARAMD/REDIST,FR,EC,OHS,ROC
0016                  DO 30 IDX=1,16
0017                  T1A(IDX)=0.
0018                  T2A(IDX)=0.
0019               30 T2E(IDX)=0.
                C     ***READ OLD, NEW POPULATION DISTRIBUTIONS
0020                  READ (5,3) (T2A(I),I=1,15)
0021                  READ (5,3) (T2E(I),I=1,15)
0022                3 FORMAT(15F5.0)
                C     ***READ PLANT DESCRIPTION CARDS
0023                  I=0
0024               10 I=I+1
0025                  READ (5,11) N(I),L(I),F(I),MW(I),(S(J,I),J=1,4),(S(J,I),J=6,9)
0026               11 FORMAT(I3,2I2,3X,I5,5X,8F5.2)
0027                  IF(N(I).EQ.0) GO TO 12
                C     ***FIXUP 760105***INCLUSION OF PAQS
0028                  READ (5,1101) S(5,I),S(10,I)
0029             1101 FORMAT(20X,2F5.2)
0030                  GO TO 10
0031               12 NP=I-1
                C     ***DISPLAY PLANT CARDS
0032                  WRITE (6,13)
0033               13 FORMAT('1',T50,'PLANT DESCRIPTION CARDS'//
                     1T50,'COMPLYING FUEL ARRAY'/T50,'S VALUES FOR COAL OR OIL',
                     1T85,'S VALUES FOR OILCO'/
                     1T10,'NUMBER',T20,'LOCATION',T30,'FUEL TYPE',T43,'MW',
                     1T50,'AQS',T57,'SIP',T64,'ND',T71,'NSP',T78,'PAQS',
                     1T85,'AQS',T92,'SIP',T99,'ND',T106,'NSP',T113,'PAQS'//)
```

```
0034                WRITE (6,14)(N(I),L(I),F(I),MW(I),(S(J,I),J=1,10),I=1,NP)
0035             14 FORMAT(' ',T10,I3,T20, I1,T30,I1,T40,I6,T50,10F7.2)
               C    ***PRELIMINARY LOOP OVER ALL PLANTS TO FILL TABLE 1A
0036                DO 200 I=1,NP
0037                XMW=MW(I)
0038                IFL=F(I)
0039                LL=L(I)
               C    ***FOR CURRENT PLANT,COMPUTE POSITION (VERTICAL INDEX IDX)
               C    ***IN TABLE 1 FORMAT
0040                IC=(MW(I)/400) +1
0041                IF(IC.GT.3) IC=3
0042                IDX=9*(IFL-1) +3*(LL-1) +IC
0043                IF(IFL.EQ.2.AND.LL.GE.2) IDX=IDX-3
0044                IX(I)=IDX
               C    ***INCREMENT APPROPRIATE ELEMENT IN TABLE 1A
0045            200 T1A(IDX)=T1A(IDX) +XMW
               C    ****************************************
               C    ***READ NUMBER OF ENVIRONMENTAL ENERGY (EPEN) MATRICES***SAME
               C    ***FOR ALL CASES TO BE RUN
               C    ****************************************
0046                READ(5,150) NUMBER
0047            150 FORMAT(I3)
0048                DO 170 IPEN=1,NUMBER
               C    *** READ IN PENALTY MATRIX
               C    *** FIRST 4 NOS CORRESPOND TO COAL,REGION A,FUEL RANGES 1-4
               C    *** NEXT  4 NOS CORRESPOND TO COAL,REGION B,FUEL RANGES 1-4
               C    *** NEXT  4 NOS CORRESPOND TO COAL,REGION C,FUEL RANGES 1-4
               C    *** LAST  4 NOS CORRESPOND TO OIL,REGION A,FUEL RANGES 1-4
               C    *** REGIONS B AND C TREATED LIKE A  FOR OIL
               C    *** OILCO TREATED LIKE COAL
0049                READ(5,153) COLPEN,OILPEN,NAMPEN
0050            153 FORMAT(16(F4.4),8X,2A4)
0051                DO 152 ITEMP=1,2
0052            152 NAMMX(ITEMP,IPEN)=NAMPEN(ITEMP)
0053                DO 154 JTEMP=1,3
0054                DO 154 ITEMP=1,4
0055                EPENMX(ITEMP,JTEMP  ,IPEN)=COLPEN(ITEMP,JTEMP)
0056                EPENMX(ITEMP,JTEMP+6,IPEN)=COLPEN(ITEMP,JTEMP)
0057            154 EPENMX(ITEMP,JTEMP+3,IPEN)=OILPEN(ITEMP)
0058            170 CONTINUE
               C    ****************************************
               C    ***READ   CASE   PARAMETERS FOR NEXT CASE
               C    ****************************************
               C    ** READ CASE NAME
0059                ICNT=0
0060            100 READ(5,601,END=300)XNAME
0061            601 FORMAT(20A4)
0062                READ (5,1) GROWTH,BASEYR,FRSTYR,LASTYR,OILCO,SGY
```

```
0063          1 FORMAT(F5.2,3I5,4X,2L1,4X,5L1,5X,5L1)
            C     *** READ REDISTRIBUTION(SCS,TALL STACKS) FACTORS
0064              READ(5,21) REDIST,EC,OHS,ROC,FR
0065         21 FORMAT(2L1,   3L1,1X,18F4.2)
0066              CALL RIPPER(ICNT)
0067              GO TO 100
0068        300 STOP
0069              END
```

```
0001                SUBROUTINE RIPPER(ICNT)
                C   ***************************************************************
                C                    RIPPER-S SUBPROGRAM
                C   ***************************************************************
                C    ( REGULATORY IMPACT ON POWER PLANT ENERGY REQUIREMENTS--8)
                C   ***ENVIRONMENTAL ENERGY PREDICTION PROGRAM***
                C   ***ARTHUR BASS***VERSION 761209
0002                REAL       S(10,101),SLIM(5)
0003                DATA SLIM/0.,0.316,1.,3.16,10./
0004                INTEGER F(101),IFIRST,ISECND,ITHIRD
0005                DATA IFIRST/0/,ISECND/0/, ITHIRD/1/
0006                INTEGER N(101),L(101),MW(101),BASEYR,FRSTYR,LASTYR,IX(101)
0007                LOGICAL SGY(5,2)     ,OILCO(2)
0008                REAL           EPENMX(4,9,50),T10(4,8,2),T11(4,10,2),T12(4,10,2),
               $       NAMMX(2,50),
               $ T13(4,10),T14(4,10), T21(8,10,2),T22(8,10,2),T23(8,10),T24(8,10)
0009                REAL T1A(16),T1B(16),
               1      T2A(16),T2B(16),                 T2E(16),T2F(16),
               1              T4A(16),T4B(16)
0010                REAL TAB1(16)/'CES','CEM','CEL','COS','COM','COL','CRB','CRM',
               1'CRL','DES','DEM','DEL','DRS','DRM','DRL','SUM'/
0011                REAL*8 TH1(7,4)/' ','1A','1B','1C','1D','1E','1F',
               1' ',6*'NPLANT',
               2' ','MW','(PC)',2*'STRAT 1',2*'STRAT 2',
               33*' ','EXTRA MW','(PC)','EXTRA MW','(PC)'/
0012                REAL*8 FMTH1(7)/'4X,A4,','F8.0,','F6.3,','F8.0,','F6.3,','F8.0,',
               1'F6.3,'/
0013                REAL*8 FMTH2(9)/'4X,A4,','F8.0,','F6.3,','F8.0,','F6.3,','F8.0,',
               1'F6.3,','F8.0,','F6.3,'/
0014                REAL*8 TH2(9,3)/' ','2A','2B','2C','2D','2E','2F','2G','2H',
               1' ',4*'PRE-1976',4*'1976-80',
               2' ','MW','(PC)','EXTRA MW','(PC)','MW','(PC)','EXTRA MW','(PC)'/
0015                REAL COALCV(3),OILCV(3)
0016                DATA COALCV/.12,.36,.52/,OILCV/0.,0.,1./
0017                REAL*8 TH4(6,2)/' ','4A','4B','4C','4D','4E',
               1' ','MW','(PC)','EXTRA MW','PC EXTRA','PC TOTAL'/
0018                REAL*8 FMTH4(6)/'4X,A4,','F8.0,','F8.3,','F8.0,','F8.3,' ,'F8.3,'/
0019                REAL XNAME(20)
0020                COMMON/NAMER/XNAME
0021                COMMON/PARAMS/GROWTH,BASEYR,FRSTYR,LASTYR,OILCO,SGY
0022                COMMON/PENALS/NUMBER,NAMMX,EPENMX
0023                COMMON/NPLANT/NP,N,L,F,MW,S,IX
0024                COMMON/TABLE1/T1A,T1B
0025                COMMON/TABLE2/T2A,T2B,          T2E,T2F
0026                COMMON/TABLE4/T4A,T4B
0027                LOGICAL EC,OHS,ROC,REDIST(2)
0028                REAL FR(3,3,2)
0029                COMMON/PARAMD/REDIST,FR,EC,OHS,ROC
```

```
0030          REAL TAB10(8)/'C-E','C-O','C-R','DEO','D-R','DCEO','DC-R','SUM'/
        C     ***SCENARIO VARIABLES
        C     ***GROWTH***GROWTH FACTOR FOR EXPONENTIAL TERM
        C     ***OILCO***A 2-ELEMENT LOGICAL ARRAY***IF OILCO(1)='TRUE',THEN OLD
        C       OIL PLANTS ARE CONVERTED***IF OILCO(2)='TRUE', THEN NEW OIL
        C       PLANTS ARE CONVERTED
        C     ***BASEYR***BASE YEAR FROM WHICH PROJECTIONS MADE
        C     ***FRSTYR,LASTYR***FIRST AND LAST YEARS OF INTEREST
        C     ***REGULATION SCENARIOS***
        C     ***SGY***A (5,2) LOGICAL ARRAY***
        C     ***FIRST INDEX=(1,2,3,4,5)  =(AQS,SIP,ND,NSP,PAQS)
        C     ***SECOND INDEX=(1,2)=(FIRST STRATEGY(OLD POP),SCND STRATEGY (NEW POP)
        C     ***IF ARRAY ELEMENT IS .TRUE., THIS REGULATION IS IMPOSED
        C     ***FIRST REGULATION IS USED FOR OLD POPULATION
        C     ***SECOND REGULATION IS USED FOR NEW POPULATION
        C     ***SLIM***ARRAY OF FIVE SULFUR FUEL LIMITS WHICH DEFINE FUEL RANGE
        C     ***PLANT DATA
        C     ***N(I)...PLANT NO
        C     ***L(I)...LOCATION INDEX...(1,2,3)=(EC,OHS,ROC)
        C     ***F(I)...FUEL INDEX...(1,2)=(COAL,OIL)
        C     ***MW(I)...MEGAWATTS
        C     ***S(J,I),(J=1,..10)...FOR COAL PLANTS, FIRST FIVE VARIABLES ARE
        C       THE COMPLYING SULFUR FUEL  FOR THIS PLANT FOR REGULATIONS
        C        (AQS,SIP,ND,NSP,PAQS) RESPECTIVELY, THE LAST FIVE VARIABLES ARE
        C        IGNORED
        C     *** FOR OIL PLANTS, THE FIRST FIVE VARIABLES ARE AS ABOVE.....
        C     ***THE LAST FIVE ARE USED IN PLACE OF FIRST FIVE, FOR OILCO
        C     ***POPULATION DATA
        C     ***STRATIFICATION FOR TABLES 1,2,4 (NEW TABLE A)
        C     VERTICAL INDEX(IDX)  ELEMENT
        C     1                    COAL- EC-S
        C     2                    COAL- EC-M
        C     3                    COAL- EC-L
        C     4                    COAL-OHS-S
        C     5                    COAL-OHS-M
        C     6                    COAL-OHS-L
        C     7                    COAL-ROC-S
        C     8                    COAL-ROC-M
        C     9                    COAL-ROC-L
        C     10                   OIL-EC OR OHS-S
        C     11                   OIL-EC OR OHS-M
        C     12                   OIL-EC OR OHS-L
        C     13                   OIL-ROC-S
        C     14                   OIL-ROC-M
        C     15                   OIL-ROC-L
        C     16                   TOTALS
        C     (17)  GRADD TOTAL
        C     ***ZERO ARRAYS***
```

```
0031                DO 30 IDX=1,16
0032                T1B(IDX)=0.
              C     ***ARRAY T2A, THE OLD POPULATION DIST, IMPUT FROM DRIVING PGM
0033                T2B(IDX)=0.
              C     ***ARRAY T2E, THE NEW POPULATION DIST, IMPUT FROM DRIVING PGM.
0034                T2F(IDX)=0.
0035                T4A(IDX)=0.
0036             30 T4B(IDX)=0.
0037                T1A(16)=0.
0038                 T2A(16)=0.
0039                 T2E(16)=0.
              C     ***SUM TABLES AND CREATE PERCENTAGE TABLES
0040                DO 410 IDX=1,15
0041                T1A(16)=T1A(16)+T1A(IDX)
0042                T2A(16)=T2A(16)+T2A(IDX)
0043            410 T2E(16)=T2E(16)+T2E(IDX)
0044                DO 420 IDX=1,16
0045                T1B(IDX)=T1A(IDX)/T1A(16)
0046                T2B(IDX)=T2A(IDX)/T2A(16)
0047            420 T2F(IDX)=T2E(IDX)/T2E(16)
0048                DO 32 IS=1,2
0049                DO 32 MX=1,4
0050                DO 32 MDX=1,10
0051                IF(MDX.GT.8) GO TO 31
0052                T10(MX,MDX,IS)=0.
0053             31 T11(MX,MDX,IS)=0.
0054                T12(MX,MDX,IS)=0.
0055                T13(MX,MDX)=0.
0056                T14(MX,MDX)=0.
0057                T21(2*(MX-1)+1,MDX,IS)=0.
0058                T22(2*(MX-1)+1,MDX,IS)=0.
0059                T23(2*(MX-1)+1,MDX)=0.
0060                T24(2*(MX-1)+1,MDX)=0.
0061                T21(2*MX,MDX,IS)=0.
0062                T22(2*MX,MDX,IS)=0.
0063                T23(2*MX,MDX)=0.
0064                T24(2*MX,MDX)=0.
0065             32 CONTINUE
              C     **********
              C     LOOP OVER PLANTS
0066                DO 400 I=1,NP
              C     ************
0067                XMW=MW(I)
0068                IFL=F(I)
0069                LL=L(I)
0070                IDX=IX(I)
              C     ************
              C     LOOP OVER POPULATIONS
```

```
0071                DO 300 IS=1,2
                C   ************
                C   ***IDENTIFY COMPLYING FUEL FOR SET OF REGULATIONS IN THIS STRTGY
0072             45 IOST=0
0073                IF(IFL.EQ.2.AND.OILCO(IS))IOST=5
0074                SMIN=99
0075                DO 46 MOOP=1,5
0076                IF(SGY(MOOP,IS))SMIN=AMIN1(SMIN,S(IOST+MOOP,I))
0077             46 CONTINUE
                C   ***FIND PERCENTAGE ENERGY PENALTY ASSOCIATED WITH THIS FUEL
0078                DO 50 LOOP=1,4
0079                K=LOOP
0080                IF(SMIN.LT.SLIM(LOOP+1)) GO TO 51
0081             50 CONTINUE
                C   ******* PUT IN COMMENT
0082             51 GO TO (60,70),IS
0083             60  XADD=XMW*T2A(IDX)/T1A(IDX)
0084                GO TO 80
0085             70  XADD=XMW*T2E(IDX)/T1A(IDX)
0086             80 CONTINUE
                C   ***COMPUTE POSITION(VERTICAL INDEX KDX) IN TABLE 10 FORMAT FOR
                C      THIS PLANT AND COMPLYING FUEL RANGEK (ALSO CALLED MX)
                C   VERTICAL INDEX(KDX)   ELEMENT
                C   1                     COAL-EC
                C   2                     COAL-OHS
                C   3                     COAL-ROC
                C   4                     OIL -EC OR OHS
                C   5                     OIL -ROC
                C   6                     OILCO-EC OR OHS
                C   7                     OILCO-ROC
                C   8                     TOTALS
0087                GO TO (82,83),IFL
0088             82 KDX=L(I)
0089                GO TO 85
0090             83 KDX=4
0091                IF(L(I).EQ.3) KDX=KDX+1
0092                IF(OILCO(IS)) KDX=KDX+2
                C   ***INCREMENT T10 TABLES
                C   ***T10(K,KDX,1)= OLD POP STRATIFIED BY INDEX K IN HORIZONTAL,
                C   *** INDEX KDX IN VERTICAL,
                C   ***T10(K,KDX,Z)= NEW POP .....
0093             85 T10(K,KDX,IS)=T10(K,KDX,IS)+XADD
                C   ******
0094            300 CONTINUE
0095            400 CONTINUE
                C   ***AT THIS POINT WE NOW HAVE OLD AND NEW POP'S STRATIFIED IN
                C   VERTICAL FORMAT KDX
                C   ***NOW DO REDISTRIBUTION IF NECESSARY
```

```
0096                IF((.NOT.REDIST(1)).AND.(.NOT.REDIST(2))) GO TO 1900
                C   ***SWITCH FACTORS FOR REDISTRIBUTION DEPEND UPON FUEL TYPE(COAL OR
                C   OIL) AND FUEL RANGE,BUT NOT UPON OLD VS NEW POPULATION
                C   FR(INDEX1,INDEX2,INDEX3,)
                C   FIRST INDEX =FUEL RANGE SWITCH INDEX
                C         INDEX=1.,MEANS MOVE REQ'D FRACTION FROM FUEL RANGE 1 TO 2
                C         INDEX=2.,MEANS MOVE REQ'D FRACTION FROM FUEL RANGE 2 TO 3
                C         INDEX=3.,MEANS MOVE REQ'D FRACTION FROM FUEL RANGE 3 TO 4
                C   SECOND INDEX=LOC'N(EC=1,OHS=2,ROC=3)
                C   THIRD INDEX=FUEL TYPE(COAL=1,OIL=2)
0097                DO 1850  IS=1,2
0098                IF(.NOT.REDIST(IS)) GO TO 1850
0099                DO 1810 LOOP=1,3
0100                MX=5-LOOP
0101                IF ((.NOT. EC).AND.(.NOT.OHS)) GO TO 1801
                C   REDISTRIBUTE OIL-EC OR OHS
0102                FT=FR(MX-1,1,2)
0103                T10(MX,4,IS)=T10(MX,4,IS)+FT*T10(MX-1,4,IS)
0104                T10(MX-1,4,IS)=(1.-FT)*T10(MX-1,4,IS)
                C   REDISTRIBUTE OILCO -EC OR OHS
0105                FT=FR(MX-1,1,1)
0106                T10(MX,6,IS)=T10(MX,6,IS)+FT*T10(MX-1,6,IS)
0107                T10(MX-1,6,IS)=(1.-FT)*T10(MX-1,6,IS)
0108             1801 IF(.NOT.EC)GO TO 1802
                C   REDISTRIBUTE COAL-EC
0109                FT=FR(MX-1,1,1)
0110                T10(MX,1,IS)=T10(MX,1,IS)+FT*T10(MX-1,1,IS)
0111                T10(MX-1,1,IS)=(1.-FT)*T10(MX-1,1,IS)
0112             1802 IF(.NOT.OHS) GO TO 1803
                C   REDISTRIBUTE COAL OHS
0113                FT=FR(MX-1,2,1)
0114                T10(MX,2,IS)=T10(MX,2,IS)+FT*T10(MX-1,2,IS)
0115                T10(MX-1,2,IS)=(1.-FT)*T10(MX-1,2,IS)
0116             1803 IF (.NOT.ROC) GO TO 1805
                C   REDISTRIBUTE COAL - ROC
0117                FT=FR(MX-1,3,1)
0118                T10(MX,3,IS)=T10(MX,3,IS)+FT*T10(MX-1,3,IS)
0119                T10(MX-1,3,IS)=(1.-FT)*T10(MX-1,3,IS)
                C   REDISTRIBUTE OIL -ROC
0120                FT=FR(MX-1,3,2)
0121                T10(MX,5,IS)=T10(MX,5,IS)+FT*T10(MX-1,5,IS)
0122                T10(MX-1,5,IS)=(1.-FT)*T10(MX-1,5,IS)
                C   REDISTRIBUTE OILCO-ROC
0123                FT=FR(MX-1,3,1)
0124                T10(MX,7,IS)=T10(MX,7,IS)+FT*T10(MX-1,7,IS)
0125                T10(MX-1,7,IS)=(1.-FT)*T10(MX-1,7,IS)
0126             1805 CONTINUE
0127             1810 CONTINUE
```

```
0128          1850 CONTINUE
             C     ***TOTAL THE (REDISTRIBUTED) POPULATIONS IN T10 FORMAT
0129          1900 CONTINUE
0130               DO 1860 IS=1,2
0131               DO 1860 MX=1,4
0132               T10(MX,8,IS)=0.
0133               DO 1860 KDX=1,7
0134          1860 T10(MX,8,IS)= T10(MX,8,IS)+T10(MX,KDX,IS)
             C     *** CREATE THE POPULATIONS DISTRIBUTED IN T11 FORMAT
             C     VERTICAL INDEX (MDX) ELEMENT
             C     1              COAL-REGION A
             C     2              COAL-REGION B
             C     3              COAL-REGION C
             C     4              OIL-REGION A
             C     5              OIL-REGION B
             C     6              OIL-REGION C
             C     7              OILCO-REGION A
             C     8              OILCO-REGION B
             C     9              OILCO -REGION C
             C     10             TOTALS
             C     *** DEFINE CONVERSION FACTORS BY WHICH TO CONVERT FROM SUMS OF
             C     (EC&OHS&ROC) TO REGIONS A,B,C
             C     ***  COALCV (IRGN=1,2,3) PARTITIONS TOTAL COAL INTO REGION A,B,C
             C     ***OILCV(1,2,3) PARTITIONS TOTAL OIL INTO REGIONS A,B,C
             C     ***OILCO TREATED LIKE COAL
0135               DO 1870 IS=1,2
0136               DO 1870 MX=1,4
0137               SUM=T10(MX,1,IS)+T10(MX,2,IS)+T10(MX,3,IS)
0138               DO 1867 IRGN=1,3
0139               MDX=IRGN
0140          1867 T11(MX,MDX,IS)=COALCV(IRGN)*SUM
0141               SUM=T10(MX,4,IS)+T10(MX,5,IS)
0142               DO 1868 IRGN=1,3
0143               MDX=IRGN+3
0144          1868 T11(MX,MDX,IS)=OILCV(IRGN)*SUM
0145               SUM=T10(MX,6,IS)+T10(MX,7,IS)
0146               DO 1869 IRGN=1,3
0147               MDX=IRGN+6
0148          1869 T11(MX,MDX,IS)=COALCV(IRGN)*SUM
0149          1870 CONTINUE
             C     ***NOW TOTAL THE T11 TABLES
0150               DO 1880 IS=1,2
0151               DO 1880 MX=1,4
0152               T11(MX,10,IS)=0.
0153               DO 1879 MDX=1,9
0154          1879 T11(MX,10,IS)=T11(MX,10,IS)+T11(MX,MDX,IS)
0155          1880 CONTINUE
             C     ***NOW ALL REQUIRED INITIAL TABLES HAVE BENN CREATED
```

```
                C     **********
                C     ENERGY USE PROJECTION SECTION
                C     **********
0156                  DO 800 IYR=FRSTYR,LASTYR
0157                  EGROW=EXP(GROWTH*FLOAT(IYR-BASEYR)) -1.
0158                  DO 810 IDX=1,16
0159            810 T4A(IDX)=T2A(IDX)+EGROW*T2E(IDX)
0160                  DO 811 IDX=1,16
0161            811 T4B(IDX)=T4A(IDX)/T4A(16)
0162                  WRITE (6,839) XNAME
0163            839 FORMAT('1',20A4)
0164                  WRITE (6,840) IYR,BASEYR,GROWTH
0165            840 FORMAT
                   1('0PREDICTION YEAR=',I4,'  BASE YEAR= ',I4,'  GROWTH RATE= ',
                   1      F7.4)
0166                  WRITE (6,841)SGY,OILCO
0167            841 FORMAT(T10,'REGULATION SET FOR OLD POPULATION',5X,'AQS=',L1,5X,
                   1'SIP=',L1,5X,'ND=',L1,5X,'NSP=',L1,5X,'PAQS=',L1,5X/
                   3       T10,'REGULATION SET FOR NEW POPULATION',5X,'AQS=',L1,5X,
                   1'SIP=',L1,5X,'ND=',L1,5X,'NSP=',L1,5X,'PAQS=',L1,5X/
                   4T10,'OIL-COAL CONVERSION FOR OLD POPULATION= ',L1/
                   4T10,'OIL-COAL CONVERSION FOR NEW POPULATION= ',L1)
0168                  WRITE (6,8411) REDIST,EC,OHS,ROC,FR
0169           8411 FORMAT(T10,'OLD POPULATION REDISTRIBUTED =',L1/
                   1       T10,'NEW POPULATION REDISTRIBUTED =',L1/
                   2       T10,'EAST COAST=',L1/
                   2       T10,'OTHER HIGH SULFATE=',L1/
                   2       T10,'REST OF COUNTRY=',L1//
                   2       T10,'C- EC',3F6.2/
                   2       T10,'C-OHS',3F6.2/
                   2       T10,'C-ROC',3F6.2/
                   2       T10,'O- EC',3F6.2/
                   2       T10,'O-OHS',3F6.2/
                   2       T10,'O-ROC',3F6.2)
0170                  DO 3000 NUM=1,NUMBER
0171                  ICNT=ICNT+1
                C     ****************PRINT CURRENT 'EPENMX' HERE ******************
0172                  WRITE (6,842) NAMMX(1,NUM),NAMMX(2,NUM),ICNT,
                   1            ((EPENMX(K,MDX,NUM),K=1,4),MDX=1,9)
0173            842 FORMAT('1CURRENT ENVIRONMENTAL ENERGY MATRIX =',2A4,
                   $ T120,'PAGE =',I4/
                   1T10,'COAL-REGION A',5X,4F7.4 /
                   1T10,'COAL-REGION B',5X,4F7.4 /
                   1T10,'COAL-REGION C',5X,4F7.4 /
                   1T10,' OIL-REGION A',5X,4F7.4 /
                   1T10,' OIL-REGION B',5X,4F7.4 /
                   1T10,' OIL-REGION C',5X,4F7.4 /
                   1T10,' OCO-REGION A',5X,4F7.4 /
```

```
                1T10,' OCD-REGION B',5X,4F7.4 /
                1T10,' OCD-REGION C',5X,4F7.4 )
          C      ***CREATE MW ENERGY PENALTY TABLES ON T12 ARRAY
          C      THE PENALTY MATRICES WILL BE SAME FOR OLD AND NEW POP'S
          C      ***T12 WILL HAVE SAME STRATIFICATION AS T11
0174             DO 2900 IS=1,2
0175             DO 2900 MDX=1,9
0176             DO 2900 K=1,4
0177        2900 T12(K,MDX,IS)=T11(K,MDX,IS)*EPENMX(K,MDX,NUM)
          C      ***TOTAL THE T12 TABLES
0178             DO 2910 IS=1,2
0179             DO 2910 K=1,4
0180             T12(K,10,IS)=0.
0181             DO 2910 MDX=1,9
0182        2910 T12(K,10,IS)=T12(K,10,IS)+T12(K,MDX,IS)
          C      ***AT THIS POINT THE ARRAY T11 HOLDS OLD,NEW POP'N MW
          C      ***AT THIS POINT THE ARRAY T12 HOLDS OLD,NEW POP'N PENALTY MW
          C      ***COMBINE OLD AND (PROJECTED) NEW POPULATIONS FOR CURRENT YEAR
0183             DO 820 MX=1,4
0184             DO 820 MDX=1,9
0185             T13(MX,MDX)=T11(MX,MDX,1) +EGROW*T11(MX,MDX,2)
0186         820 T14(MX,MDX)=T12(MX,MDX,1) +EGROW*T12(MX,MDX,2)
0187             DO 825 MX=1,4
0188             T13(MX,10)=0.
0189             T14(MX,10)=0.
0190             DO 825 MDX=1,9
0191             T13(MX,10)=T13(MX,10)+T13(MX,MDX)
0192         825 T14(MX,10)=T14(MX,10)+T14(MX,MDX)
          C      ***CREATE PERCENTAGE TABLES ASSOCIATED WITH T11,T12,T13,T14
0193             DO 830 IS=1,2
0194             SUM1=T11(1,10,IS)+T11(2,10,IS)+T11(3,10,IS) +T11(4,10,IS)
0195             SUM2=T12(1,10,IS)+T12(2,10,IS)+T12(3,10,IS) +T12(4,10,IS)
0196             IF(IS.EQ.2) GO TO 8291
0197             SUM3=T13(1,10)+T13(2,10)+T13(3,10)+T13(4,10)
0198             SUM4=T14(1,10)+T14(2,10)+T14(3,10)+T14(4,10)
0199        8291 CONTINUE
0200             DO 830 MX=1,4
0201             DO 830 MDX=1,10
0202             T21(2*(MX-1)+1,MDX,IS)=T11(MX,MDX,IS)
0203             T22(2*(MX-1)+1,MDX,IS)=T12(MX,MDX,IS)
0204             T21(2*MX,MDX,IS)=T11(MX,MDX,IS)/SUM1
0205             T22(2*MX,MDX,IS)=T12(MX,MDX,IS)/SUM2
0206             IF(IS.EQ.2) GO TO 8292
0207             T23(2*(MX-1)+1,MDX)=T13(MX,MDX)
0208             T24(2*(MX-1)+1,MDX)=T14(MX,MDX)
0209             T23(2*MX,MDX)=T13(MX,MDX)/SUM3
0210             T24(2*MX,MDX)=T14(MX,MDX)/SUM4
0211        8292 CONTINUE
```

```
0212          830 CONTINUE
            C     ******NOW DISPLAY ALL TABLES******
0213                CALL OUT(T1A,T1B,T2A,T2B,T2E,T2F,T4A,T4B,T21,T22,T23,T24,IYR,
                   1   IFIRST,ISECND,ITHIRD,ICNT)
0214         3000 CONTINUE
0215          800 CONTINUE
0216                RETURN
0217                END
```

APPENDIX C

ENVIRONMENTAL ENERGY CONSUMPTION ALGEBRA

APPENDIX C

ENVIRONMENTAL ENERGY CONSUMPTION ALGEBRA

Consider a power generation system consisting of an individual plant and all streams which enter or leave the plant (fuel, electricity, water, chemicals, hardware, etc.). In the absence of any environmental constraints, this system produces I_o Btu's of electricity, at the demand point, for every E_o Btu's of fossil fuel invested.

The conversion efficiency,

$$f_o = I_o/E_o \tag{1}$$

is approximately equal to the conversion efficiency of the plant itself (≈ 35-40 percent). Note, however, that our definitions include pre-plant and post-plant energy expenditures such as energy used in fuel transport, ash removal or transmission losses.

Now suppose increments of fossil and electrical energy ΔE and ΔI are required for environmental control purposes, where ΔE does not include the additional fuel burned in boilers to produce ΔI. The electricity conversion efficiency is:

$$f = \frac{I_o + \Delta I}{E_o + \Delta E + \frac{\Delta I}{f}} = \frac{f_o}{\left(1 + \frac{\Delta E f_o}{I_o}\right)} \tag{2}$$

The total fractional increment in fossil energy consumption is:

$$\frac{\overline{\Delta E}}{E_o} = \frac{\Delta E}{E_o} + \Delta I/fE_o = \frac{\Delta E}{E_o} + \frac{\Delta I}{I_o} + \frac{\Delta E}{E_o}\,\frac{\Delta I}{I_o} \tag{3}$$

The last term of this expression is due to the decrease in system efficiency f because of the fuel energy ΔE used for environmental control rather than power generation purposes.

The last term in Equation (3) is expected to be considerably smaller than the others. It does indicate however, that a change in $\frac{\Delta E}{E_o}$ is

not entirely equivalent to a change in $\frac{\Delta I}{I_o}$. Consider the case where $\frac{\Delta E}{E_o} = 8\%$ and $\frac{\Delta I}{I_o} = 4\%$. An increase in $\frac{\Delta E}{E_o}$ to 12% gives $\overline{\frac{\Delta E}{E_o}} = 16.48\%$, while a similar increase $\frac{\Delta I}{I_o}$ to 8% gives $\overline{\frac{\Delta E}{\Delta E_o}} = 16.64\%$. Neglect of the last item in Equation (4) entirely would give $\overline{\frac{\Delta E}{\Delta E_o}} = 16.00\%$.

11884 * U.S. GOVERNMENT PRINTING OFFICE : 1977 0-730-397/1589

RESEARCH REPORTING SERIES

Research reports of the Office of Research and Development, U.S. Environmental Protection Agency, have been grouped into nine series. These nine broad categories were established to facilitate further development and application of environmental technology. Elimination of traditional grouping was consciously planned to foster technology transfer and a maximum interface in related fields. The nine series are:

1. Environmental Health Effects Research
2. Environmental Protection Technology
3. Ecological Research
4. Environmental Monitoring
5. Socioeconomic Environmental Studies
6. Scientific and Technical Assessment Reports (STAR)
7. Interagency Energy-Environment Research and Development
8. "Special" Reports
9. Miscellaneous Reports

This report has been assigned to the INTERAGENCY ENERGY-ENVIRONMENT RESEARCH AND DEVELOPMENT series. Reports in this series result from the effort funded under the 17-agency Federal Energy/Environment Research and Development Program. These studies relate to EPA's mission to protect the public health and welfare from adverse effects of pollutants associated with energy systems. The goal of the Program is to assure the rapid development of domestic energy supplies in an environmentally-compatible manner by providing the necessary environmental data and control technology. Investigations include analyses of the transport of energy-related pollutants and their health and ecological effects; assessments of, and development of, control technologies for energy systems; and integrated assessments of a wide range of energy-related environmental issues.

This document is available to the public through the National Technical Information Service, Springfield, Virginia 22161.