United States
Environmental Protection
Agency

Industrial Environmental Research
Laboratory
Research Triangle Park NC 27711

EPA-600/7-78-186b
September 1978

EPA

Environmental Assessment Data Base for High-Btu Gasification Technology: Volume II. Appendices A, B, and C

Interagency Energy/Environment R&D Program Report

RESEARCH REPORTING SERIES

Research reports of the Office of Research and Development, U.S. Environmental Protection Agency, have been grouped into nine series. These nine broad categories were established to facilitate further development and application of environmental technology. Elimination of traditional grouping was consciously planned to foster technology transfer and a maximum interface in related fields. The nine series are:

1. Environmental Health Effects Research
2. Environmental Protection Technology
3. Ecological Research
4. Environmental Monitoring
5. Socioeconomic Environmental Studies
6. Scientific and Technical Assessment Reports (STAR)
7. Interagency Energy-Environment Research and Development
8. "Special" Reports
9. Miscellaneous Reports

This report has been assigned to the INTERAGENCY ENERGY-ENVIRONMENT RESEARCH AND DEVELOPMENT series. Reports in this series result from the effort funded under the 17-agency Federal Energy/Environment Research and Development Program. These studies relate to EPA's mission to protect the public health and welfare from adverse effects of pollutants associated with energy systems. The goal of the Program is to assure the rapid development of domestic energy supplies in an environmentally-compatible manner by providing the necessary environmental data and control technology. Investigations include analyses of the transport of energy-related pollutants and their health and ecological effects; assessments of, and development of, control technologies for energy systems; and integrated assessments of a wide range of energy-related environmental issues.

REVIEW NOTICE

This report has been reviewed by the participating Federal Agencies, and approved for publication. Approval does not signify that the contents necessarily reflect the views and policies of the Government, nor does mention of trade names or commercial products constitute endorsement or recommendation for use.

This document is available to the public through the National Technical Information Service, Springfield, Virginia 22161.

EPA-600/7-78-186b

September 1978

Environmental Assessment Data Base for High-Btu Gasification Technology: Volume II. Appendices A, B, and C

by

M. Ghassemi, K. Crawford, and S. Quinlivan

TRW Environmental Engineering Division
One Space Park
Redondo Beach, California 90278

Contract No. 68-02-2635
Program Element No. EHE623A

EPA Project Officer: William J. Rhodes

Industrial Environmental Research Laboratory
Office of Energy, Minerals, and Industry
Research Triangle Park, NC 27711

Prepared for

U.S. ENVIRONMENTAL PROTECTION AGENCY
Office of Research and Development
Washington, DC 20460

CONTENTS

APPENDIX A - GASIFICATION OPERATION A-1
Dry Ash Lurgi Process A-2
Slagging Gasification Process A-25
Cogas Process A-41
Hygas (Steam Oxygen) Process A-63
CO_2-Acceptor Process A-88
Synthane Process A-118
Bigas Process A-137
Battelle-Carbide (Self-Agglomerating Ash) Process A-152
Hydrogasification (Hydrane) Process A-162
Koppers-Totzek Process A-178
Texaco Process A-196

APPENDIX B - GAS PURIFICATION OPERATION B-1
Acid Gas Removal Module
Physical Solvents
Rectisol Process B-2
Rectisol (Dual Absorption Mode) Process B-14
Selexol Process B-21
Purisol Process B-29
Estasolvan Process B-35
Fluor Solvent Process B-41

Amines
Sulfiban (MEA) Process B-48
MDEA Process B-54
SNPA-DEA Process B-60
ADIP Process B-66
Fluor Econamine (DGA) Process B-73
Alkazid (Alkacid) Process B-80

CONTENTS (Continued)

Mixed Solvents
Sulfinol Process B-86
Amisol Process B-95

Carbonate Processes
Benfield (Hot Carbonate) Process B-100

Redox Processes
Giammarco-Vetrocoke (G-V) Process B-113
Stretford Process B-121

Methanation Guard Module
Zinc Oxide Adsorption Process B-129
Iron Oxide Adsorption Process B-136
Metal Oxide Impregnated Carbon Process B-145
Activated Carbon Process (Organics Removal from Gases) B-151
Molecular Sieves Process B-157

APPENDIX C - GAS UPGRADING OPERATION C-1
Shift Conversion Module
Cobalt Molybdate Process C-2

Methanation and Drying Module
Fixed-Bed Methanation Process C-11
Fluidized-Bed Methanation Process C-25
Liquid Phase Methanation/Shift (LPM/S) Process C-31

APPENDIX A

GASIFICATION OPERATION

Dry Ash Lurgi Process

Slagging Gasification Process

Cogas Process

HYGAS (Steam-Oxygen) Process

CO_2-Acceptor Process

Synthane Process

BIGAS Process

Battelle-Carbide (Self-Agglomerating Ash) Process

Hydrogasification (Hydrane) Process

Koppers-Totzek Process

Texaco Process

DRY ASH LURGI GASIFICATION PROCESS

1.0 General Information

1.1 Operating Principles - High pressure coal gasification in a gravitating bed by injection of steam plus oxygen with countercurrent gas/solid flow; ash is maintained below the fusion temperature.

1.2 Development Status - Commercially available since 1940.

1.3 Licensor/Developer - Lurgi Mineralöltechnik GMbH

American Lurgi Corp.
377 Rt. 17 South
Hasbrouch Heights, New Jersey

1.4 Commercial Applications - See Table A-1.

2.0 Process Information

2.1 Commercial Scale - See Figure A-1 for flow sheet.

2.1.1 Gasifier; See Figures A-2 and A-3*.

2.1.1.1 Equipment[1,2]

- Construction: vertical, cylindrical steel pressure vessel
- Gasifier dimensions:
  - 2.5 to 3.8 m (8.5 to 12.3 ft) in diameter
  - 2.1 to 3.0 m (7 to 10 ft) coal bed depth
  - 5.8 m (19 ft) approximate overall height of gasifier

---

*Figure A-2 shows the evolution of Lurgi gasifiers with corresponding increases in capacity. Figure A-3 presents the commercial model which is the basis for all further discussion.

TABLE A-1. LURGI, DRY ASH, COMMERCIAL INSTALLATIONS[1]

Plant No.	Location	Year	Type of Coal	Gasifier I.D.	Capacity (MMSCFD)	No. of Gasifiers
1	Bohlen, Central Germany	1940	Lignite	8'6"	9.0	5
2	Bohlen, Central Germany	1943	Lignite	8'6"	10.0	5
3	Most, CSSR	1944	Lignite	8'6"	7.5	3
4	Zaluzi-Most, CSSR	1949	Lignite	8'6"	9.0	3
5	Sasolburg, South Africa	1954	Sub-Bitum. with 30% ash and more	12'1"	150.0	9
6	Dorsten, West Germany	1955	Caking Sub-Bitum. with high chlorine content	8'9"	55.0	6
7	Morwell, Australia	1956	Lignite	8'9"	22.0	6
8	Daud Khel, Pakistan	1957	High Volatile coal with high sulfur content	8'9"	5.0	2
9	Sasolburg, South Africa	1958	Sub-Bitum. with 30% ash and more	12'1"	19.0	1
10	Westfield, Great Britain	1960	Weakly Caking Sub-Bitum.	8'9"	28.0	3
11	Jealgora, India	1961	Different grades	N/A	0.9	1
12	Westfield, Great Britain	1962	Weakly Caking Sub-Bitum.	8'9"	9.0	1
13	Coleshill, Great Britain	1963	Caking Sub-Bitum. with high chlorine content	8'9"	46.0	5
14	Naju, Korea	1963	Graphitic anthracite with high ash content	10'5"	75.0	3
15	Sasolburg, South Africa	1966	Sub-Bitum. with 30% ash and more	12'1"	75.0	3
16	Luenen, GFR	1970	Sub-Bitum.	11'4"	1400 MM Btu/hr	5
17	Sasolburg, South Africa	1973	Sub-Bitum.with 30% ash and more	12'4"	190.0	3

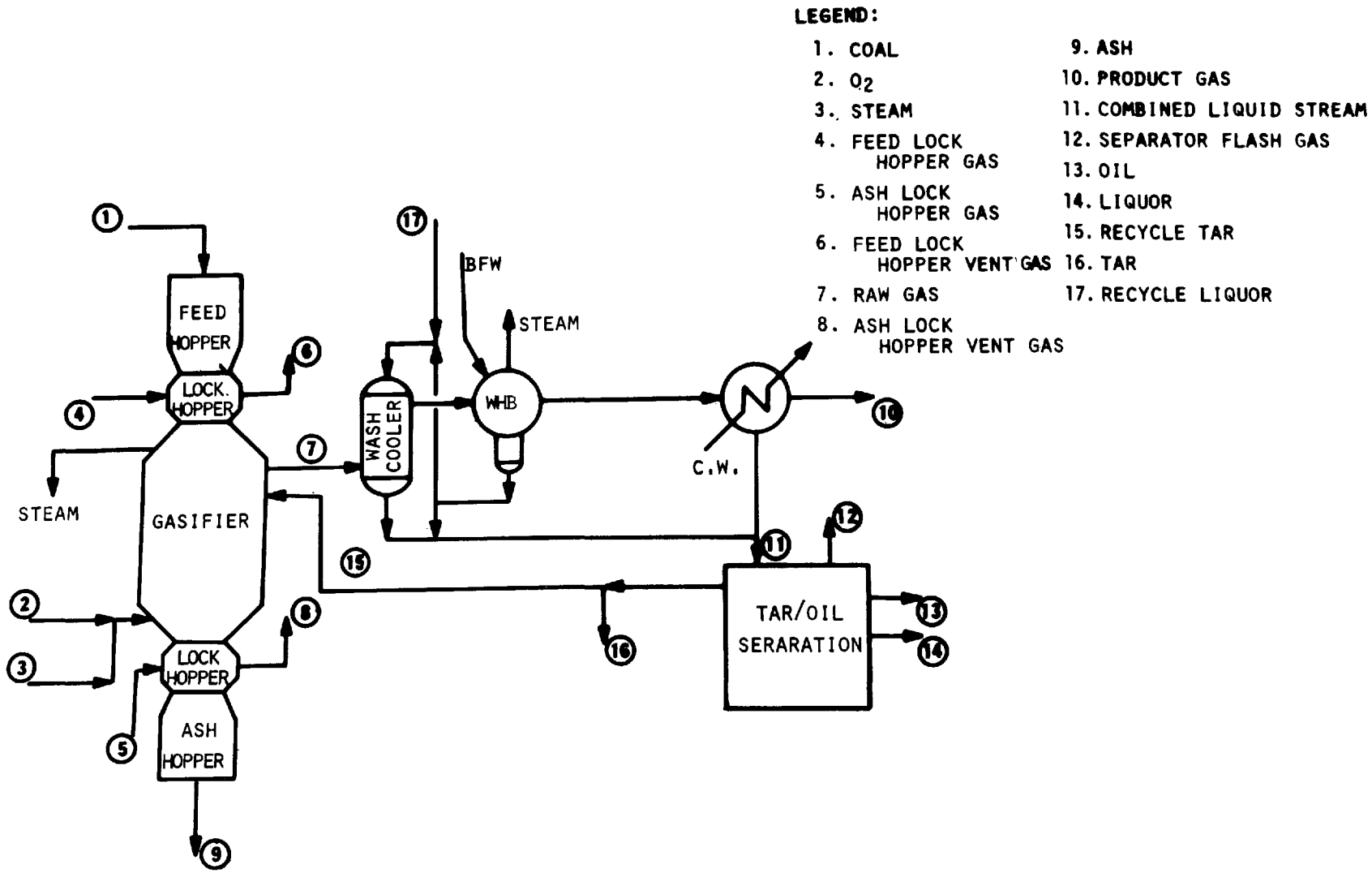

Figure A-1. Lurgi Gasifier (Based on Westfield Lurgi Installation)

	first generation	second generation		third generation
year	1936 - 1954	1952 - 1965		from 1969
	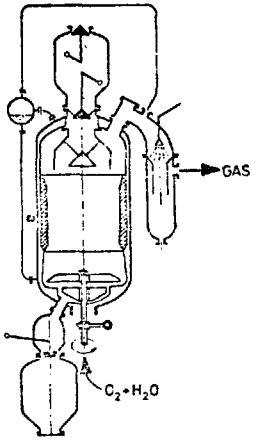	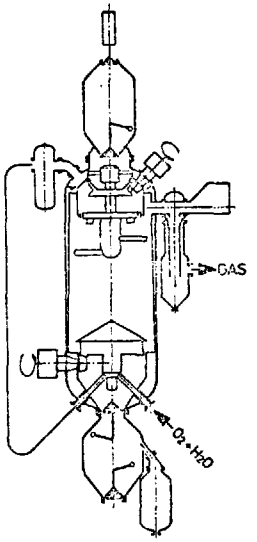	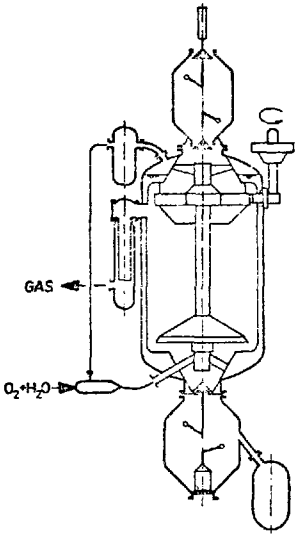	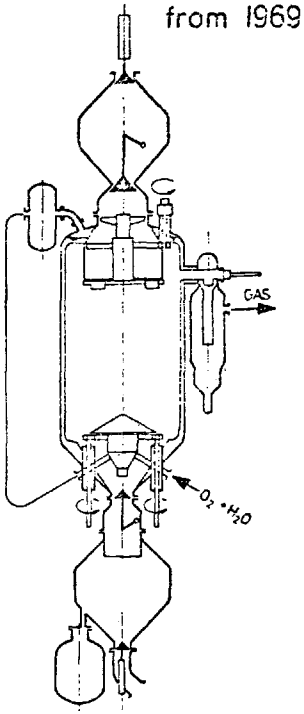
coal grade	lignite	all coal grades	non-caking coals	all coal grades
capacity $\frac{\text{MM BTU coal input}}{\text{hr}}$	100	180-250	400-500	450-570

Figure A-2. Stages of Lurgi Gasifier Development

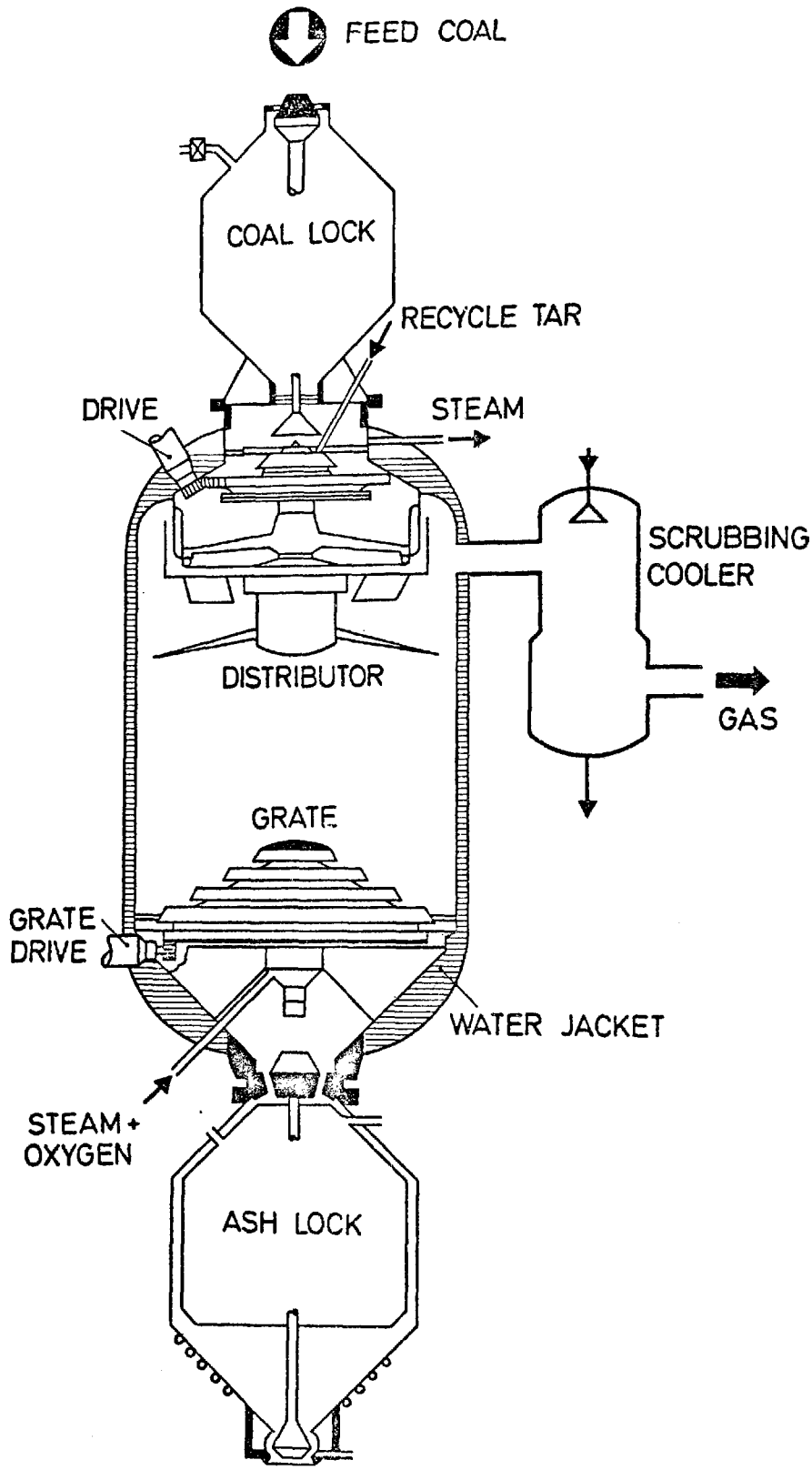

Figure A-3. Lurgi Pressure Gasifier

- Bed type and gas flow: gravitating bed; continuous countercurrent gas flow; lateral gas outlet near the top of the gasifier.

- Heat transfer and cooling mechanism: direct gas/solid heat transfer; water jacket provides gasifier cooling.

- Coal feeding: intermittent; pressurized lock-hopper at the top of the gasifier dumps the coal onto a rotating, water-cooled coal distributor.

- Gasification media introduction: continuous injection of steam plus oxygen at the bottom of the coal bed through a slotted ash extraction grate.

- Ash removal: rotating, slotted grate at the bottom of the coal bed; refractory lined, pressurized lock hopper collects the ash and dumps it intermittently.

- Special features:

  - Direct quench gas scrubber and cooler which knocks out the majority of particulates, tars, oils, phenols and ammonia, is attached to the gasifier at the gas outlet.

  - Gasifier water jacket supplies approximately 10 percent of the required gasification steam.

  - Rotating coal distributor provides uniform coal bed depth.

  - Tar injection nozzle at the top of the gasifier permits recycle of by-product tar (separated external to the gasification module) which also helps to reduce coal fines carryover in the product gas (optional features).

  - Rotating, water-cooled coal bed agitator aids the gasification of strongly caking coals (optional feature).

2.1.1.2 Operating Parameters[1,2]

- Gas outlet temperature:
  Range - 644°K to 866°K (700°F to 1100°F)
  Normal - 727°K (850°F)

- Coal bed temperatures:
  1255°K to 1644°K (1800°F to 2500°F)

- Gasifier pressure:
  Range - 2.1 to 3.2 MPa (300 to 465 psia)
  Normal - 2.1 MPa (300 psia)

- Coal residence time in gasifier:
  Approximately one hour

2.1.1.3 Raw Material Requirements[1,2]

- Coal Feedstock

  Type: All types; strongly caking coals require agitator reduced throughput and increased steam rate.

  Size: 3.2 to 38.1 mm (0.125 to 1.5 in): Coal is usually fed in two size ranges; coal with up to 10% minus 3.2 mm (0.125 in) can be accepted.

  Rate:* 136 to 544 g/sec-m^2 (100 to 400 lb/hr-ft^2)

- Coal pretreatment - crushing and sizing, drying to less than 35 percent moisture; partial oxidation is required for use of strongly caking coals in gasifiers without agitators.

- Steam - 1.11 to 2.59 kg/kg coal[3]

- Oxygen - 0.26 to 0.62 kg/kg coal[3]

- Quench water - 3.3×10^{-4} m^3/kg coal[2]

---

*Rate varies with gasifier design and coal type.

2.1.1.4 Utility Requirements[1]

- Water

  Boiler - 2.42×10^{-3} m^3/kg coal (580 gal/ton coal)

  Cooling - ?

- Electricity - 25 kWh/metric ton (23 kWh/ton)

2.1.1.5 Process Efficiency

- Cold gas[3] - 63 to 60 percent

$$[=] \frac{[\text{Product gas energy output}]}{[\text{Coal energy input}]} \times 100$$

- Overall thermal[1] - 76 percent

$$[=] \frac{[\text{Total energy output (product gas + HC by-products + steam)}]}{[\text{Total energy input (coal + electric power)}]} \times 100$$

2.1.1.6 Expected Turndown Ratio[1] = 100/25

$$[=] \frac{[\text{Full capacity output}]}{[\text{Minimum sustainable output}]}$$

2.1.1.7 Gas Production Rate/Yield[3] -
0.37 to 0.68 m^3/sec-m^2 (4875 to 900 scf/hr-ft^2)
0.93 60 1.70 Nm^3/kg coal (16 to 30 scf/lb-coal)

2.2 Coal Feed Pretreatment - Coal feed is from pressurized lockhoppers, no pretreatment required in third-generation gasifiers.

2.3 Quench and Dust Removal - Crude gas leaves the top of the gasifier and flows through a scrubber cooler, where it is washed by recirculating quench liquor from the tar-oil separation section. The gases then pass through a waste heat boiler and a final cooler. Dust, tars and condensables are collected from these units.

3.0 Process Economics - Due to the advanced state of development of the Lurgi gasifier, numerous studies related to costs have been completed[4,5,6,7]. However, most of these address themselves only to integrated facilities rather than the gasification module. The one exception, in which equipment lists are presented and detailed cost estimates made, is the Bureau of Mines Study[4]. For a 250 MMSCFD SNG facility costing a total of $737,538,000 in 1974 dollars, 27.1 percent

is estimated to be attributable to the gasification section. Lurgi[7] estimates total plant costs of $440,000,000 also in 1974 dollars. No gasification section cost estimates are made.

4.0 Process Advantages

- Present gasifiers can accept caking and non-caking coals.
- Pressurized operation favors the formation of methane in the gasifier and reduces upgrading costs. The high pressure of the product gas would also reduce the cost of gas transmission via pipeline. High pressure may also be advantageous for combined-cycle or synthesis gas utilization.
- Gasifier has been operated commercially for many years.
- Small reactor size may be advantageous for small-scale industrial applications.

5.0 Process Limitations

- Caking coals reduce throughput rate and increase steam consumption which also increases the amount of liquid waste to be treated.
- Maintaining the coal-bed temperature below the ash fusion temperature limits the maximum process efficiency.
- Process condensate and by-products require additional processing for environmental acceptability.
- Maintaining a low coal bed temperature results in low steam conversion in the gasifier.
- Limited reactor size may necessitate use of multiple units in parallel for large installations.

6.0 Input Streams[3,8]

6.1 Coal (Stream No. 1) - See Table A-2.

6.2 Oxygen (Stream No. 2)

Coal No.	1	2	3	4	5
Rate: kg/kg (Includes 6% inerts)	0.26	0.48	0.49	0.62	--
Pressure: MPa (psia)	3.6 (370)	3.5 (360)	3.5 (360)	3.5 (360)	--

TABLE A-2. PROPERTIES OF COAL FEED TO LURGI GASIFICATION (STREAM NO. 1)

Coal No.	1	2	3	4	5
Type/Origin	Montana Rosebud* Subbituminous A	Illinois #6* High Volatile	Illinois #5* Bituminous	Pittsburgh #8	South African† Subbituminous
Size: mm (in)	6.4-31.8 (1/4-1 1/4)	6.4-31.8 (1/4-1 1/4)	6.4-31.8 (1/4-1 1/4)	6.4-31.8 (1/4-1 1/4)	
HHV (dry):					
Kcal/kg (Btu/lb)	6553 (11,436)	7094 (12,770)	7228 (13,010)	7826 (14,087)	4989 (8,980)
Swelling No.	0	3	2.2-5	7.5	--
Caking Index	0	15	15	30	--
Composition:					
Moisture: %	24.70	10.23	11.94	4.58	8.0
Volatile matter: %	29.20	34.70	35.21	37.37	--
Ash: %	9.73	9.10	8.13	7.74	31.6
C: %	67.15	71.47	72.80	77.71	52.4
H: %	4.22	4.83	4.95	5.28	2.6
O: %	13.02	9.02	7.99	4.74	11.7
S: %	1.45	3.13	3.56	2.64	0.43
N: %	1.20	1.35	1.39	1.42	1.2
Trace Elements‡(ppm)					
Be	--	1.6	2.0	--	--
Hg	--	1.1	0.2	--	--
Ca	--	< .03	< .03	--	--
Sb	--	0.1	.2	--	--
Se	--	--	9	--	--
Mo	--	7	7	--	--
Co	--	4	4	--	--
Ni	--	14	32	--	--
Pb	--	10	28	--	--
As	--	1	2	--	--
Cr	--	20	15	--	--

(continued)

TABLE A-2. Continued

Coal No. Type/Origin	1 Montana Rosebud* Subbituminous A	2 Illinois #6* High Volatile	3 Illinois #5* Bituminous	4 Pittsburgh #8	5 South African† Subbituminous
Trace Elements‡(cont) (ppm)					
Cu	--	12	10	--	--
B	--	132	307	--	--
Zn	--	43	200	--	--
V	--	29	21	--	--
Mn	--	20	22	--	--
F	--	79	57	--	--
Cl	400	600	800	1000	--

*From trials of American coals at Westfield[3].

†Data from SASOL unit in South Africa[8].

‡Data from trials of American coals at Westfield[10].

6.3 Steam (Stream No. 3)

Coal No.	1	2	3	4	5
Rate: kg/kg	1.11	1.97	1.84	2.59	--
Pressure: (psia)	(370)	(362)	(360)	(360)	
Temperature: °K (°F)					

6.4 Feed Lock Hopper Gas (Stream No. 4) - No data reported.

6.5 Ash Lock Hopper Gas (Stream No. 5) - No data reported.

7.0 Intermediate Streams

7.1 Gaseous Streams

7.1.1 Feed Lock Hopper Vent Gas (Stream No. 6) - No operational data reported.

7.1.2 Raw Gas (Stream No. 7) - No operational data reported.

7.1.3 Ash Lock Hopper Vent Gas (Stream No. 8) - No operational data reported.

7.2 Liquid Streams

7.2.1 Combined Liquid Stream (Stream No. 11) - No data reported.

7.2.2 Recycle Liquid (Stream No. 17) - No data reported.

7.2.3 Recycle Tar (Stream No. 15)[3]

Coal No.	1	2	3	4	5
Toluene (wt %)	32.3	8.6	8.0	3.2	--
Insoluble (dust) Ash	29.2	10.8	11.1	12.2	--
Composition	(See Tars - Stream No. 16)				

8.0 Discharge Streams

8.1 Gaseous

- Product Gas (Stream No. 10) - See Table A-3.
- Separator Flash Gas (Stream No. 12) - See Table A-4.

TABLE A-3. PRODUCTION RATE AND COMPOSITION OF LURGI PRODUCT GAS-STREAM NO. 10[3,8]

Coal No.	1	2	3	4	5
Production Rate:					
Nm^3/kg coal (CO_2, N_2, and O_2 free basis)	0.98 m^3/kg	1.36	1.79	1.32	1.36
Gas Analysis:					
H_2	41.1%	39.1	38.8	39.4	40.05
O_2 (includes N_2+Argon)	1.2	1.2 (N_2-0.6)	1.5 (N_2-0.7)	1.6 (N_2-0.8)	--
CO	15.1	17.3	17.5	16.9	20.20
CH_4	11.2	9.4	9.2	9.0	8.84
CO_2	30.4	31.2	31.0	31.5	28.78
C_2H_6	0.5%	0.7	0.5 (C_2H_4-0.3)	0.7 (C_2H_9-0.1)	0.54
H_2S	666g/100Nm^3	1510	1420	1010	422
Total Organic Sulfur	12-40	23	30	15	--
NH_3	0.09	0.18	not detectable	0.18	--
HCN	0.27g/100Nm^3	2.8	8.7	0.50	--
Naphthalene	0.24	0.68	1.1	1.2	--
St. ClairdeVille Condensable	389	460	531	277	--

TABLE A-4. COMPOSITION OF LURGI SEPARATOR FLASH GAS-STREAM NO. 12 (VOL. %)[3]

Coal No.	1		2		3		4		5
	Tar Sep.	Oil Sep.	Tar Sep.	Oil Sep.	Tar Sep.	Oil Sep.	Tar Sep.	Oil Sep.	--
H_2S	3.8	8.6	5.7	5.5	6.2	6.8	4.4	5.5	--
NH_3	6.3	12.0	1.0	1.8	4.6	2.7	2.9	3.5	--
CO_2	64.7	59.3	84.9	85.5	62.9	67.0	71.3	73.9	--
CO	5.9	4.7	1.5	0.8	4.5	4.2	4.7	3.8	--
H_2	2.9	2.3	3.5	3.6	11.7	13.3	12.0	9.6	--
O_2+Argon	3.1	2.5	0.4	0.6	1.3	1.4	0.3	0.2	--
N_2	8.0	6.4	1.2	1.0	5.9	2.3	1.0	0.8	--
CH_4	5.3	4.2	1.8	1.2	2.9	2.3	3.4	2.7	--

8.2 Liquid Streams

- Tars (Stream No. 16) - See Tables A-5 and A-9.
- Oils (Stream No. 13) - See Tables A-6 and A-9.
- Liquors (Stream No. 14) - See Tables A-7 and A-9.

8.3 Solids Streams

- Ash (Stream No. 9) - See Tables A-8 and A-9.

9.0 Data Gaps and Limitations

Even though the Lurgi gasifier has the most complete data of any gasifier due to its advanced state of development, the available data are not comprehensive in that not all streams (e.g., lockhopper vent gas) are addressed, and not all potential pollutants and toxicological and ecological properties are identified. An environmental data acquisition effort which would lead to the generation of the needed data corresponds to the EPA's phased level approach to multimedia environmental sampling and analysis[9].

10.0 Related Programs

Environmental assessments of commercial scale Lurgi SNG facilities have been prepared by El Paso Natural Gas for its proposed Burnham facility and by ANG Coal Gasification Company for its proposed North Dakota Coal Gasification Project. Documents on process and environmental considerations for other projects have also been released. Chief among these is the Wesco SNG facility. ERDA is presently continuing tests at the British Coal Board's Lurgi plant at Westfield, Scotland. The present series of tests involves operating the Lurgi gasifier in the slagging mode (this is the subject of another gasifier data sheet). The U.S. EPA has released a report, "Control of Emissions from Lurgi Coal Gasification Plants," (EPA 450/2-78-012, March 1978) which is to provide information to States and regional EPA offices involved in setting standards for or evaluating impacts from proposed Lurgi gasification facilities.

TABLE A-5. PROPERTIES OF LURGI TAR - STREAM NO. 10

Coal No.	1	2	3	4	5
Production Rate: kg/kg coal	0.02	0.03	0.04	0.03	0.02*
Water: wt. %	30.0	26.7	10.4	11.9	--
Toluene insoluble wt. %	22.0	4.5	7.1	8.5	--
Density: grams/cc	1.025	1.145	1.148	1.175	--
Phenols: (wet) wt. %	5.3	2	4.7	1	--
Calorific Value					
Gross: Kcal/kg (Btu/lb)	8794 (15,830)	8829 (15,893)	8837 (15,906)	8956 (16,120)	--
Ultimate Analysis (dry, dust-free basis)					
C wt. %	83.06	85.48	85.85	88.51	--
H wt. %	7.69	6.44	6.40	5.93	--
N wt. %	0.65	1.18	1.19	0.87	--
S wt. %	0.28	1.70	2.39	1.52	0.3
Cl wt. %	0.04	N.D.	N.D.	N.D.	--
Ash wt. %	0.05	0.03	0.01	0.01	--
O (by difference) wt. %	8.23	5.17	4.16	3.16	--

TABLE A-6. PROPERTIES OF LURGI OIL - STREAM NO. 13[3]

Coal No.	1	2	3	4	5
Production rate kg/kg	0.02	0.003	0.007	0.01	0.004
Water: wt. %	22.3	4.3	5.4	15.4	--
Dust: wt. %	0.4	0.8	0.1	0.02	--
Density: grams/cc	0.937	1.015	1.011	0.991	--
Phenols: (dry, dust-free) wt. %	19.1	20.1	19.2	10.0	--
Calorific Value					
Kcal/kg (Btu/lb)	(16,960)	(16,482)	(16,578)	(17,134)	--
Ultimate Analysis:					
C: wt. %	81.34	84.82	8.488	87.33	--
H: wt. %	9.17	7.77	7.65	7.61	--
N: wt. %	0.46	0.70	0.49	0.45	--
S: wt. %	0.50	2.40	2.27	1.50	0.25
Cl: wt. %	0.04	N.D.	N.D.	N.D.	--
Ash: wt. %	0.03	0.01	0.01	0.01	--
Oxygen: (by difference) wt. %	8.46	4.30	4.70	3.10	--

TABLE A-7. PROPERTIES OF LURGI LIQUORS - STREAM NO. 14[3]

Coal No.	1		2		3		4		5
Prod. Rate kg/kg	0.93		2.11		1.77		2.60		1.06
Tar: ppm	350	650	1130	2150	2150	2200	300	1100	5000 (tar & oil)
Analysis on tar free basis	Inlet tar sep.	Inlet oil sep.	Inlet tar sep.	Inlet oil sep.	Inlet tar sep.	Inlet oil sep.	Inlet tar sep.	Inlet oil sep.	
Tar free basis									
pH	9.6	8.3	9.8	8.5	9.5	8.3	9.3	8.2	--
S.G. at 60°F	1.003	1.025	1.003	1.032	1.002	1.027	1.000	1.026	--
T.D.S.: ppm	4030	1765	2770	1570	3180	1120	1550	1240	--
T.D.S. after ignition ppm	45	35	110	35	85	25	105	120	--
Sulfide H_2S, ppm	130	115	25	440	15	490	65	520	--
Total S; ppm	150	265	180	730	160	930	155	720	--
Fatty acids: ppm	1250	1670	490	280	400	260	275	610	0.03%
Ammonia:									
Free: ppm	3990	14015	1700	17650	1520	13970	1600	14000	10,600
Fixed ppm	395	525	280	210	410	330	320	250	150-200
Carbonate: ppm	4070	19460	1280	6550	680	9210	1360	10740	--

(continued)

TABLE A-7. Continued

Coal No.	1		2		3		4		5
Total phenols: ppm	4200	4406	2200	1900	2900	3750	1400	2150	3250-4000
Cyanide: ppm	2	4	3	11	7	14	1	12	6
Thiocyanate: ppm	6	15	65	160	79	158	70	185	--
Cl: ppm	45	40	135	75	290	170	240	210	--
BOD: ppm	9900	13400	3800	4700	6000	6200	4100	5400	--
COD: ppm	22700	20800	10100	12000	9300	10600	650	7500	--

TABLE A-8. PROPERTIES OF LURGI ASH - STREAM NO. 9[3,10]

Coal No.	1	2	3	4	5
Production Rate: kg/kg	0.097	0.090	0.087	0.077	0.313
Angle of repose	24°	33°	41°	43°	--
Bulk Density Poured:					
kg/Nm^3 (lb/ft^3)	918 (57.4)	762 (47.6)	990 (61.9)	(42.1)	--
Tapped:					
kg/Nm^3 (lb/ft^3)	1078 (67.4)	894 (55.9)	1106 (69.1)	(48.9)	--
Ash Fusion Temp. Oxidizing:					
I.F.: °C	1240	1350	1280	1340	--
H.P.: °C	1260	1365	1300	1360	--
F.P.: °C	1290	1390	1330	1380	--
Reducing:					
I.F.: °C	1165	1090	1030	1145	--
H.P.: °C	1175	1150	1060	1170	--
F.P.: °C	1210	1225	1070	1180	--
Partial analysis					
Carbon: wt. %	6.5	3.2	2.0	7.6	--
SiO_2: wt. %	46.8	49.6	46.1	43.6	52
Al_2O_3: wt. %	17.7	20.5	18.1	20.7	28
Fe_2O_3: wt. %	11.2	17.2	19.7	15.0	5
CaO: wt. %	8.3	2.1	3.9	3.0	7
MgO: wt. %	3.9	1.0	0.7	0.7	1.7
Sulfur (as SO_3): wt. %	1.7	1.3	0.6	0.8	0.2
Cl: wt. %	0.01	0.01	0.01	0.01	--

(continued)

TABLE A-8. Continued

Coal No.	1	2	3	4	5*
Trace Elements† (ppm)					
Be	--	14	20	--	--
Hg	--	.04	.016	--	--
Cd	--	<0.3	<0.3	--	--
Sb	--	0.2	19		
Se	--	--	--	--	--
Mo	--	6	8	--	--
Co	--	.40	.38	--	--
Ni	--	456	462	--	--
Pb	--	96	200	--	--
As	--	0.1	0.3	--	--
Cr	--	750	592	--	--
Cu	--	239	273	--	--
B	--	622	673	--	--
Zn	--	469	1600	--	--
V	--	301	181	--	--
Mn	--	200	305	--	--
F	--	5	4.6	--	--

*Trace element balance for SASOL is presented in Table A-9.
†From Reference 10.

TABLE A-9. TRACE ELEMENT BALANCE FOR LURGI AT SASOL*
(% OF ELEMENT IN COAL)(8)

Element	Ash	Liquor	Tar	Oil	Total
Be	1	1.6	0.5	0.01	3
B	36	3.5	0.8	0.002	40
V	72	0.06	0.005	<0.001	72
Mn	154	0.36	0.005	<0.001	154
Ni	154	0.64	0.05	0.01	155
As	36	90	2.5	5.2	134
Cd	40	35	0.5	1.1	77
Sb	40	36	3	0.5	80
Ce	72	0.1	0.003	0.001	72
Hg	40	32	4.9	0.5	77
Pb	180	3.2	8.2	0.02	191
Br	3.6	32	0.05	--	36
F	54†	42†	0.08	0.003	96
Cl	51†	46†	0.24	0.008	97

*Analysis by spark source mass spectrometer (which can give a semi-quantitative analysis) for El Paso by SASOL.
†% distribution calculated on analyses as done by Sasol previously.

REFERENCES

1. Handbook of Gasifiers and Gas Treatment Systems, Dravo Corp., ERDA FE-17772-11, February 1972.

2. The Lurgi Process: The Route to S.N.G. from Coal, presented at the Fourth Synthetic Pipeline Gas Symposium, Chicago, Illinois, October 1972.

3. Woodall-Duckham, Ltd, Trials of American Coals in a Lurgi Gasifier at Westfield, Scotland, Final Report, Research and Development Report No. 105, FE-105; Crawley, Sussex, England, November 1974.

4. Preliminary Economic Analysis of Lurgi Plant Producing 250 Million SCFD Gas from New Mexico Coal, Report No. ERDA-75-57, Bureau of Mines, Morgantown, West Virginia, March 1976.

5. Gallagher, J. T., Political and Economic Justification for Immediate Realization of a Synfuels Industry, Third Annual International Conference on Coal Gasification and Liquefaction: What Needs To Be Done Now!, Pittsburgh, Pennsylvania, August 1976.

6. Kasper, S., Lurgi Gasification Process: Prospects for Commercialization, Symposium on Coal Gasification and Liquefaction, Pittsburgh, Pennsylvania, August 1974.

7. The Lurgi Pressure Gasification: Applicability, Lurgi Express Information Brochure No. 01145/6.75, January 1974.

8. Information provided the Fuel Process Branch of EPA's Industrial Environmental Research Laboratory (Research Triangle Park) by South African Coal, Oil and Gas Corporation, Ltd, November 1974.

9. Dorsey, J. A., and Johnson, L. D., Environmental Assessment Sampling and Analysis: Phased Approach and Techniques for Level 1, EPA-600/2-77-115, June 1977.

10. Sather, N. F., et al, Potential Trace Element Emissions from the Gasification of Illinois Coal, Illinois Institute for Environmental Quality, No. 75-08, February 1975.

SLAGGING GASIFICATION PROCESS

1.0 General Information

1.1 Operating Principles - High pressure gasification of coal in a gravitating bed by injection of steam plus oxygen with counter-current gas/solid flow. Gasifier operation in the slagging mode requires lower steam rates producing high thermal efficiency. Solids are removed from the gasifier as a molten slag.

1.2 Development Status - The slagging gasifier is being developed by the Department of Energy (DOE) at its Grand Forks Energy Research Center (GFERC) and by British Gas Corporation (BGC) and Lurgi at Westfield, Scotland. The latter work is sponsored by a consortium headed by CONOCO. The DOE/GFERC unit is a relatively small pilot plant (0.4m gasifier diameter); tests performed to date with this gasifier have been with bituminous char, lignite char and lignite. The BGC/Lurgi unit is a pilot plant (2.8m diameter) based on earlier bench-scale work carried out by BGC at Solihull, England in the 1950's. The slagging Lurgi Process is the basis for a proposed demonstration plant sponsored by DOE[10].

1.3 Licensor/Developer - DOE/GFERC: U.S. Department of Energy
Grand Forks Energy Research Center
Grand Forks, North Dakota

BGC/Lurgi: British Gas Corporation
59 Bryanston St.
Marble Arch
London, W-1, England

Lurgi Mineralötechnik GmbH
P.O. Box 119181
Bockhemeyer Landstrasse 42
D-6 Frankfurt (Main), Germany

1.4 Commercial Developments - None.

2.0 Process Information

2.1 DOE/GFERC Slagging Gasifier - Flow diagram, see Figure A-4.

2.1.1 Gasifier

Equipment[1,2]

- Gasifier Construction: vertical, cylindrical steel pressure vessel with refractory lining.
- Gasifier Dimensions: diameter 0.4 (16.6 in), coal bed depth 1.8 to 4.6m (6 to 15 ft), overall height 11.6m (38 ft).
- Bed type and gas flow: gravitating bed, continuous counter-current gas/solids flow, lateral gas outlet near top of gasifier.
- Heat transfer and cooling mechanism: direct gas/solid heat transfer, water jacket for gasifier cooling.
- Coal feeding: intermittent pressurized lockhopper which is an integral part of the gasifier.
- Gasification media introduction: continuous injection of steam plus oxygen through tuyeres (injection ports) in the sides of the bottom of the gasifier.
- Slag removal: a tap hole in the conical bottom of the gasifier drains the slag into a quench bath from which it is passed to a slag lockhopper for intermittent removal.
- Special features
  - Direct gas quench gas scrubbing cooler knocks out particulates, tars, oils, phenols and ammonia
  - Side stream sample line at top of gasifier allows raw product gas analysis.

Operating Parameters[1,2]

- Gas outlet temperature: $358^{o}F$ to $644^{o}K$ ($185^{o}F$ to $700^{o}F$)
- Maximum allowable coal bed temperature: approximately 1644°K (2500°F), depends upon the ash fusion temperature of the feed coal. Bed temperature depends upon oxygen rate, O_2/steam ratio, and coal moisture.

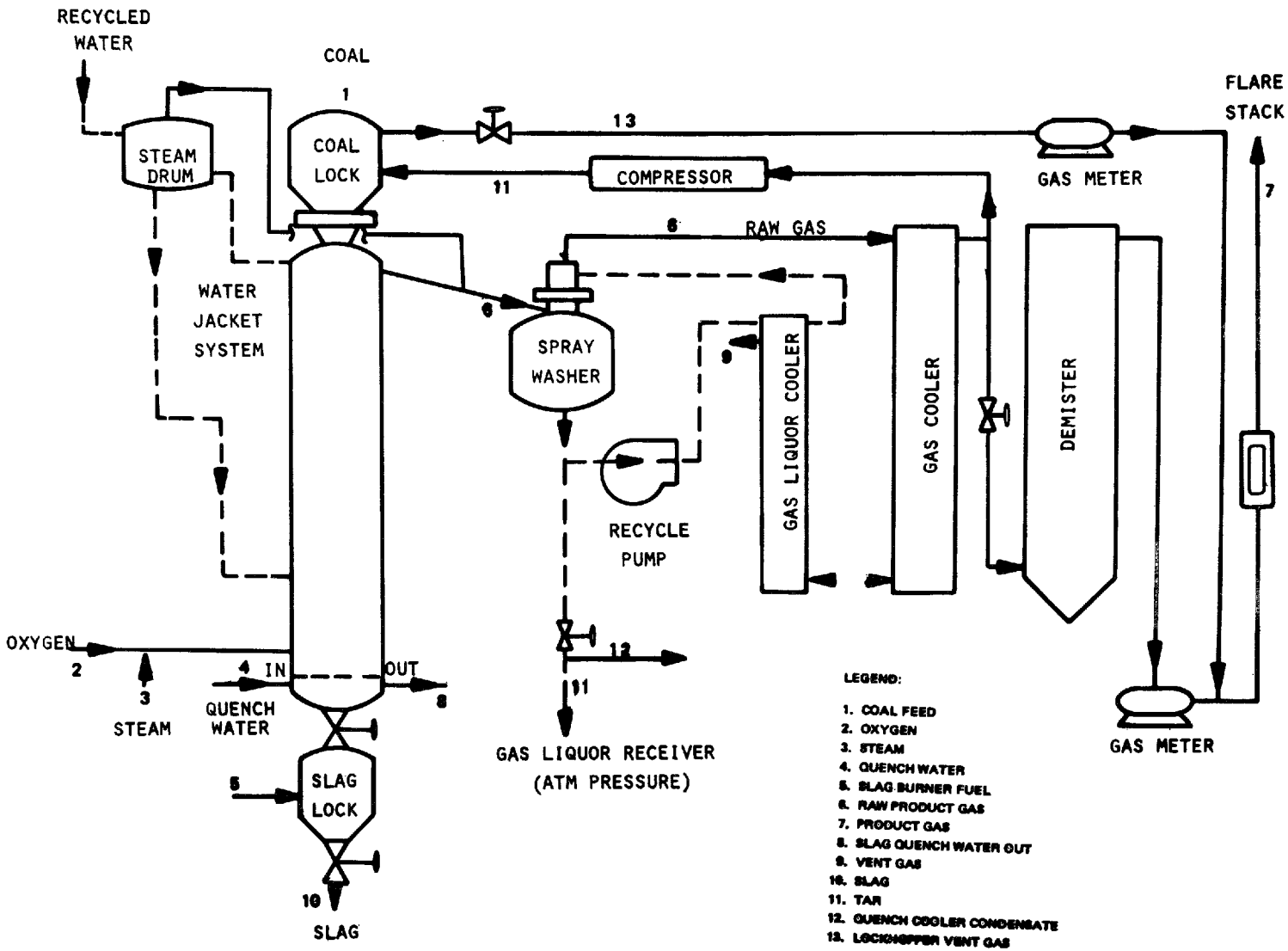

Figure A-4. DOE/GFERC Slagging Gasifier Pilot Plant[1,2]

- Gasifier pressure: 0.66 to 2.9 MPa (95 to 415 psia).
- Coal residence time in gasifier: approximately 15 to 45 minutes.

Raw Material Requirements[1,2,8]

- Coal feedstock requirements:
  - Type: bituminous char, lignite char or lignite
  - Size: 6.4 to 19 mm (0.25 to 0.75 in)
  - Rate: 262 to 1860 g/sec-m^2 (193-1370 lb/hr-ft^2)
- Coal pretreatment: crushing and sizing
- Steam: 0.30 to 0.46 kg/kg coal (MAF)
- Oxygen: 0.48 to 0.55 kg/kg coal (MAF)

Utility Requirements

- Water: ?
- Electricity: ?

Process Efficiency[2]

- Cold gas efficiency: 77.3 to 85.4%

$$\frac{[\text{Product gas energy output}]}{[\text{Coal energy input}]} \times 100$$

- Overall thermal efficiency: ?

$$\frac{[\text{Total energy output (product gas + HC by-products + steam)}]}{[\text{Total energy input (coal + electric power)}]} \times 100$$

Expected Turndown Ratio: ?

Gas Production Rate/Yield[1,2]: 0.53 to 2.1 Nm^3/sec-m^2 (6566 to 26,060 scf/hr-ft^2); 1.0 to 1.9 Nm^3/kg coal (17 to 33 scf/lb coal).

2.1.2 Coal Feed/Pretreatment[1] - Coal feed from pressurized lock hoppers, pretreatment as per Raw Material Requirements in Section 2.2.1.

2.1.3 Quench and Dust Removal[1]: Cooled gas leaves the gasifier and flows through a spray cooler where it is washed and cooled by a recirculating liquor. The gases then pass through an indirect cooler and demister before being flared.

2.2 BGC/Lurgi Pilot Plant - Flow diagram, see Figure A-5 .

2.2.1 Gasifier

Equipment[3,4]

- Construction: vertical, cylindrical steel pressure vessel with refractory lining in lower half of gasifier.
- Gasifier dimensions:

  Diameter - 0.9m (3 ft) at Solihull
  2.8m (9.25 ft) at Westfield

  Coal bed depth - 3.1m (10 ft)

- Bed type and gas flow: same as DOE/GFERC
- Heat transfer and cooling mechanism: same as for DOE/GFERC
- Coal feeding: pressurized lockhopper at the top of gasifier dumps coal intermittently onto a rotating, water-cooled coal distributor. Coal fines can be injected into the combustion zone through the tuyeres (steam-oxygen injection ports).
- Gasification media introduction: same as for DOE/GFERC
- Slag removal: same as for DOE/GFERC
- Special features:
  - Direct quench gas scrubber knocks out particulates, tars, oils, phenols, and ammonia at the gas outlet.
  - Rotating coal distributor provides uniform coal bed composition.
  - Sampling ports at the side of the gasifier permit measurements of temperature and gas composition.

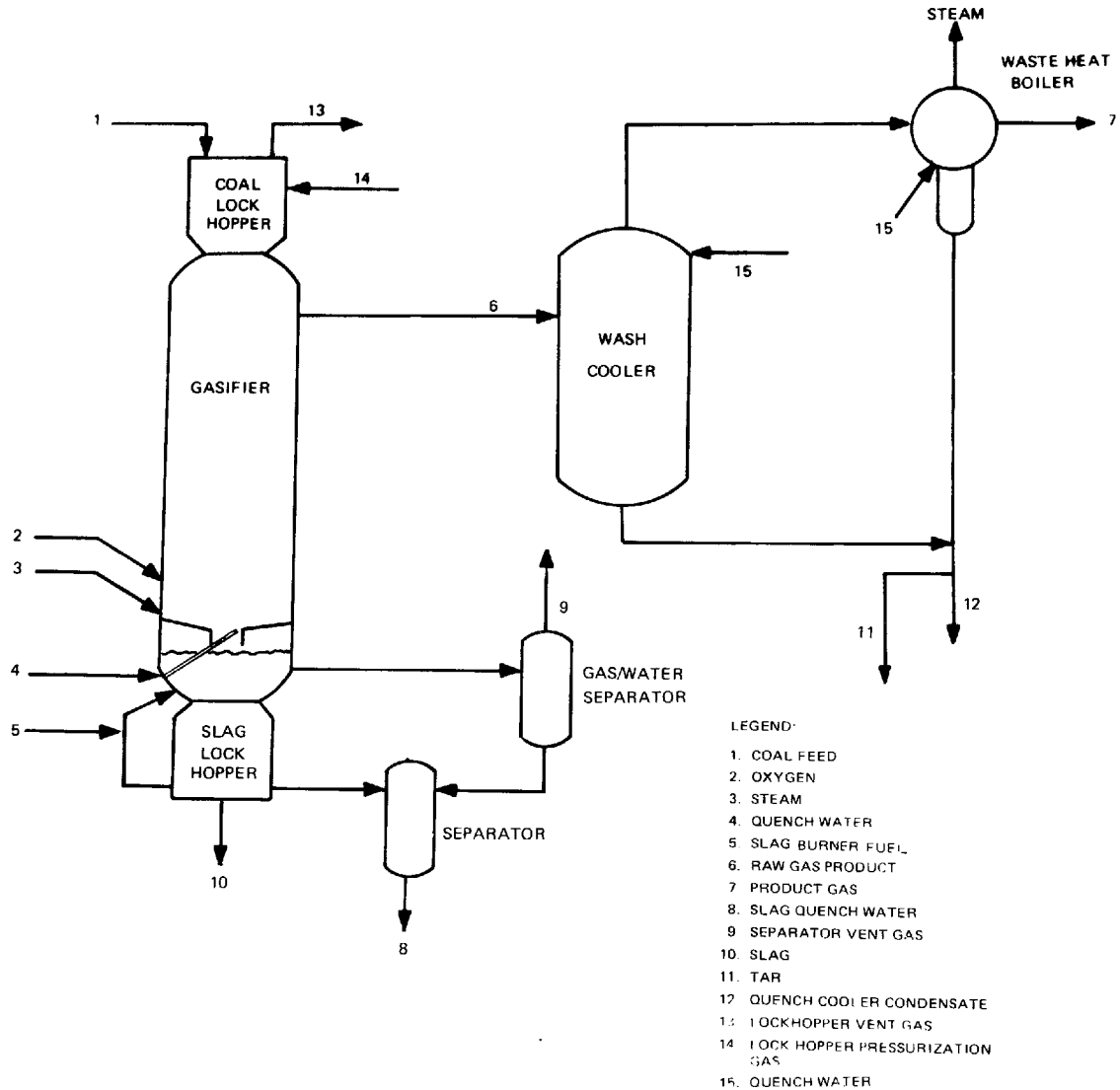

Figure A-5 . BGC/Lurgi Slagging Gasifier Pilot Plant at Westfield

Operating Parameters[4,5]

- Gas outlet temperature: $473^{o}K$ to $1073^{o}K$ ($390^{o}F$ to $1470^{o}F$)
- Maximum coal bed temperature: greater than $1533^{o}K$ ($2300^{o}F$), depending on the ash fusion temperature of the feed coal.
- Gasifier pressure: 2.07 to 2.76 MPa (300 to 400 psia).
- Coal residence time in gasifier: approximately 10 to 15 minutes.

Raw Material Requirements[3,5]

- Coal feedstock:
  - Type: Generally all types; only those coals with high refractory ash content (15% to 20%) are considered not well suited. Strongly caking coals require the use of an agitator.
  - Size: 13 to 51 mm (0.5 to 2.0 in)
  - Rate: 702 to 1958 g/sec-m^2 (516 to 1440 lb/hr-ft^2)
- Coal pretreatment: crushing and sizing, drying to less than 35% moisture*
- Steam: 0.29 to 0.31 kg/kg coal (MAF)
- Oxygen: 0.48 to 0.53 kg/kg coal (MAF)
- Quench water: ?

Utility Requirements

- Water: ?
- Electricity: ?
- Fuel (for slag burner): ?

Process Efficiency[3]

- Cold gas: 83%
- Overall thermal efficiency: ?

*Instead of drying, injection of tar and powdered coal (fines) into the fuel bed through tuyeres may be employed.

Expected Turndown Ratio: ?

Gas Production Rate/Yield[3,5]: 2.03 to 2.14 Nm^3/kg coal (34-36 scf/lb coal).

2.2.2 Coal Feed/Pretreatment - Coal feed is from pressurized lock-hoppers; pretreatment as per Raw Material Requirements in Section 2.2.1.

2.2.3 Quench and Dust Removal[3,5] - Raw gas leaves the top of the gasifier and flows through a scrubber cooler where it is washed by a recirculating quench liquor. The gases then flow through a waste heat boiler. Condensates are sent to tar/oil separation facilities.

3.0 Process Economics[5]

A 1.5 x 10^3 Nm^3/day (60 MMscfd) facility producing 8010 kcal/Nm^3 (950 Btu/scf) gas is being designed by a consortium* headed by CONOCO. Funding is to be provided 50% by the consortium and 50% by DOE. Projected capital costs for the facility are about $190,000,000. This figure includes development and engineering, construction and 3.5 years of operation. A credit of $45,000,000 is taken for the operational period in estimating the required capital cost. Cost of the gas produced in the demonstration plant is projected to be $19.9/MM Kcal ($4.79/MMBtu's) and would decrease to $13.8/MM kcal ($3.46/MMBtu's) for a commercial scale facility. All dollar values are given in 1975 dollars.

4.0 Process Advantages

- Increased efficiency and throughput over conventional fixed-fed non-slagging gasifiers.
- Reduced steam consumption.

*The consortium consists of: Consolidated Gas Supply Corp., Continental Oil Company, El Paso Natural Gas Company, Natural Gas Pipeline Company of America, Pacific Gas and Electric Company, Panhandle Eastern Pipeline Company, Tennessee Gas Transmission Company, Texas Eastern Gas Transmission Corp., and Transco Energy Company.

- High pressure operation favors methane production in the gasifier and reduces subsequent methanation requirements and hence gas transmission costs.

- Coal fines may be utilized through injection into the coal bed.

- Smaller reactor size (for same production rate as for fixed-bed non-slagging gasifier).

5.0 Process Limitations

- Caking coals may require pretreatment coals with low ash content or a high percentage of refractory ash may require addition of ash fluxing agents (coals of these types have not yet been tested).

- Condensates and by-products will require additional processing.

- Slagging gasifiers have been operated only on a pilot plant scale.

- The DOE/GFERC gasifier has experienced trouble with tap hole erosion in tests to date.

6.0 Input Streams*

6.1 Coal (Stream No. 1) - see Table A-10.

6.2 Oxygen (Stream No. 2)

Gasifier	BGC/Lurgi[6]	GFERC[8]
Rate: kg/kg (MAF)	0.48	0.29

6.3 Steam (Stream No. 3)

Gasifier	BGC/Lurgi[6]	GFERC[8]
Rate: kg/kg (MAF)	0.29	0.16

6.4 Lockhopper Gas (Stream No. 13 DOE/GFERC) - Product Gas

6.5 Slag Burner Fuel (Stream No. 5 BGC/Lurgi) - ?

6.6 Quench Water (Stream No. 4): ?

*Data for the BGC/Lurgi are from tests run at the Solihull facility; data from Westfield are unavailable at the present time. Data for GFERC reflect the particular coal and operating conditions employed; data for other coals and operating conditions are being generated which may differ from those presented here.

TABLE A-10. PROPERTIES OF SLAGGING GASIFIER FEED COALS

Property	DOE/GFERC(7)	BGC/Lurgi(6)
Type	Indianhead/Lignite	Donisthorpe/Weakly Caking Bituminous
Size, mm (in)	6.4 to 19 (0.25 to 0.75)	35.4 to 38.1 (1.0 to 1.5)
Rate, g/sec-m^2 (lb/hr-ft^2)	1053 (775)	1952 (14.36)
Flux Added	None	None
Composition, %		
Volatile Matter	29.4	N/A*
Moisture	27.0	13.8
Ash	8.6	5.6
Fixed carbon	35.0	N/A*
Ultimate Analysis, %		
Hydrogen	5.9	N/A*
Carbon	45.6	N/A*
Nitrogen	0.7	N/A*
Oxygen	38.5	N/A*
Sulfur	0.7	1.3
Ash	8.6	5.6
Higher Heating Value, J/kg (Btu/lb)	1.75×10^7 (7620)	N/A*
Swelling Number	0	N/A*
Caking Index	0	N/A*

*N/A = Data not available

7.0 Intermediate Streams

7.1 Raw Gas (Stream No. 6): ?

7.2 Quench Cooler Condensate (Stream No. 12, BGC/Lurgi): ?

8.0 Discharge Streams

8.1 Quenched Product Gas (Stream No. 7) - See Table A-11

8.2 Coal Lockhopper Vent Gas (Stream No. 13) BGC/Lurgi): ?

GFERC - Product Gas

8.3 Separator Vent Gas (Stream No. 9): ?

8.4 Slag Water (Stream No. 8): ?

8.5 Quench Cooler Condensate (Stream No. 12)

BGC/Lurgi: ?
DOE/GFERC: See Table A-12

8.6 Tar (Stream No. 11): See Table A-13

8.7 Slag (Stream No. 10) - See Table A-14

9.0 Data Gaps and Limitations

Limitations in the data available for slagging gasifiers relate primarily to specific stream compositions. The major limitations for the gasifier include:

- Feed coals - limited data on ash and trace element composition
- Raw and cleaned product gas - no data on trace sulfur and nitrogen compounds. No trace element data.
- Water requirements - no data on quench or cooling water requirements.

TABLE A-11. SLAGGING GASIFIER PRODUCT GAS COMPOSITION AND PROPERTIES (STREAM NO. 7)

Constituent/Parameter	GFERC(7)*	BGC/Lurgi(6)
CO, %	56.9	60.85
H_2, %	29.6	28.1
$CH_4 + C_2H_4$, %	5.3	7.7
C_2H_6, %†	0.2	0.55
CO_2, %	7.5	2.7
N_2 + Ar, %	Not Reported	Not Determined
O_2, %	0.1	Not Determined
H_2S	Not Reported	Not Reported
COS + CS_2	Not Reported	Not Reported
Tar	Not Reported	Not Reported
Particulates (kg/kg coal)	Not Reported	2.3×10^{-2}
Higher Heating Value Kcal/Nm^3 (Btu/scf)	3364 (339)	3162 (375)

*Example data for gasification of Indianhead/lignite

†Reported as C_nH_m which may also contain other light olefins.

TABLE A-12. PROPERTIES OF RAW GAS QUENCH CONDENSATE FROM DOE/GFERC GASIFIER (STREAM 12)(7)

Production Rate: kg/kg coal	0.312
Constituent/Property:	
pH	8.9
Alkalinity, ppm as $CaCO_3$	13,500
Turbidity, JTU	43
TOC, ppm	10,015
TOC, kg/kg coal	0.005
NH_3, ppm	9,605
NH_3, kg/kg coal	0.004
Suspended tar, ppm	1,032
Particulate, ppm in liquor	45
Liquor particulate, kg/kg coal	15×10^{-6}
Total Dissolved Solids, ppm	2,924
Inorganic Dissolved Solids, ppm	418
Mass Spectrometer Analysis of Organic Liquor Fraction, %	
Phenol	56.382
Cresol	19.616
Xylenol	4.523
Methylnaphthalene	0.341
Biphenyl	0.188
Dimethylnaphthalene	0.264
Fluorene	0.174
Carbazole	0.091
Dibenzofuran	0.740
Phenanthrene	3.175
Methylbenzofuran	1.009
Methylphenanthrene	0.764
Pyrene/Fluoranthene	1.004
Methylpyrene	1.776
Benzonaphthiofuran	0.684
Chrysene	0.119
Benzopyrene	0.711

TABLE A-13. PROPERTIES OF TAR PRODUCED IN DOE/GFERC GASIFIER (STREAM 11)[7]

Production Rate: kg/kg coal	0.25
Moisture content, % as received	39.5
Specific gravity at 289°K (60°F)	
As received	0.817
Dry	1.017
Total particulates as received, %	1.7
Ultimate analysis, %	
C	83.86
H	8.72
O	5.91
N	0.88
S	0.49
Boiling point distribution, %	
Oils to 200°C	16.40
200 to 270°C	30.90
270 to 300°C	9.30
Pitch	41.00
Loss	2.30
Ash, dry basis %	0.37
Heating value, kcal/kg	9320(16776)
Mass Spectrometer analysis of tar sample, dry basis %	
Phenol	13.5
Indanol	6.8
Dibenzofuran	2.0
Indanes	3.4
Naphthol	4.9
Indenes	1.7
Pyridines	2.1
Quinolines	1.2
Naphthalene	9.7
Biphenyl	2.6
Fluorene	4.1
Phenanthrene	4.6
Pyrene	2.5
Chrysene	1.6
Benzenes	4.5
Benzopyrenes	1.8

TABLE A-14. COMPOSITION OF SLAG PRODUCED IN DOE/GFERC GASIFIER (STREAM NO. 10)[7]

Production Rate, kg/kg coal	0.67
Composition, %	32.6
SiO_2	13.3
Al_2O_3	8.1
Fe_2O_3	5.7
MgO	21.4
CaO	7.7
Na_2O	0.6
K_2O	

10.0 Related Programs

Programs for both the DOE/GFERC[7] gasifier and the BGC/Lurgi gasifier[5] are expected to continue. The DOE/GFERC installation is expected to perform tests on gasifier operation with different coals. Also, tests involving the utilization of coal fines, by either agglomeration or direct injection into the gasification zone, are to be performed. The BGC/Lurgi gasifier is involved presently with the testing of American coals at Westfield. Development work on the gasifier and demonstration plant is continuing.

Under DOE sponsorship, CONOCO and British Gas Corporation have conducted tests with American Coals (Pittsburgh No. 8 and Ohio No. 9) at a Lurgi gasifier in Westfield, Scotland, modified to operate under slagging conditions[9]. These tests, which have been aimed primarily at collecting engineering data for the design of a demonstration plant in the U.S., have included 48-hour duration runs with (a) Ohio No. 9 premixed with coke; (b) Pittsburgh No. 8 premixed with coke; and (c) Pittsburgh No. 8 alone. While the runs with Pittsburgh No. 8 have been very successful, limited success has been obtained with the Ohio No. 9. Except for one additional "exploratory" run which is planned for August-September 1978 with Pittsburgh No. 8, the DOE/CONOCO slagging gasification test program at Westfield is considered complete.

REFERENCES

1. Ellman, R.C., et al, Current Status of Studies in Slagging Fixed-Bed Gasification at the Grand Forks Energy Research Center, presented at the 1977 Lignite Symposium, Grand Forks, North Dakota, May 18-19, 1977.

2. Ellman, R.C., et al, Slagging Fixed-Bed Gasification presented at the 4th Annual International Conference on Coal Gasification, Liquefaction and Conversion to Electricity, Pittsburgh, Pa., August 2-4, 1977.

3. Savage, P.R., Slagging Gasifier Aims for SNG Market, Chemical Engineering, September 12, 1977.

4. Schora, Frank C., Jr., Fuel Gasification. Advances in Chemistry Series 69, a symposium sponsored by the Division of Fuel Chemistry at the 152nd Meeting of ACS, New York, N.Y., September 1966.

5. Sudbury, John D., J. R. Bowden, et al, Demonstration of the Slagging Gasification Process, 8th Synthetic Pipeline Gas Symposium, Chicago, Ill., October 18-20, 1976.

6. Lacey, J.A., The Gasification of Coal in a Slagging Pressure Gasifier, American Chemical Society, Division of Fuel Chemistry, 10 (4), 151-67 (1966).

7. Ellman, R.C. and Johnson, B.C., Slagging Fixed-Bed Gasification at the Grand Forks Energy Research Center, 8th Synthetic Pipeline Gas Symposium, October 18-20, 1976.

8. Information provided to TRW by R.C. Ellman and M. Fegley of GFERC, March, 1978.

9. Information provided to TRW by Mr. Robert Verner of DOE, July 24, 1978.

10. Cameron Engineers, Inc., Synthetic Fuels Quarterly, Vol. 15, No. 1, March 1978, p 13-25.

COGAS PROCESS

1.0 General Information

1.1 Operating Principles - Low pressure, fluidized coal pyrolysis, char gasification and char combustion (to provide heat for char gasification) steps in series with steam injection in the gasifier and air injection in the combustor.

1.2 Development Status - Two separate portions of the COGAS process (coal pyrolysis and char gasification/combustion) have been tested at two different pilot plants. The coal pyrolysis step (the "COED" Process), which was developed by FMC Corporation under sponsorship of the U.S. Office of Coal Research, was tested in a 33-tonne/day (36-ton/day) pilot plant constructed in 1970 at Princeton, N.J. Tests at this plant were conducted on lignite, subbituminous and bituminous coals[1]. The char gasification/combustion portion of the COGAS process has been tested in a 45-tonne/day (50-ton/day) steam blown char gasifier and air blown char combustor pilot plant, constructed in 1975 at laboratories of the British Coal Utilization Research Association, Ltd. (BCURA) in Leatherhead, England.* The chars from the COED pilot plant were used at the BCURA facility. The COED chars have also been successfully gasified in a Koppers-Totzek gasifier in Spain[1,2].

*The BCURA pilot plant uses recycled char as the heat carrier (see Section 2.2). An earlier 2.3-tonne/day (2.5-ton/day) pilot plant using an inert solid heat carrier was tested for a brief period at Princeton, N.J.; this design, however, was abandoned in favor of the BCURA design.

In June 1977 ERDA awarded a contract to Illinois Coal Gasification Group (ICGG)* to design, construct and operate a 2000 tonne/day (2200 TPD) coal gasification demonstration plant producing 5.58 Nm^3/day (18 x 10^6 scfd) of SNG and 380 m^3/day (2400 bbls/day) of syncrude[3]. The plant is to use the COGAS process, integrating fluidized bed pyrolysis as developed under Project COED, and steam gasification of the char from pyrolysis. The plant is to be built in Perry County, Illinois, and is to process a blend of Herrin No. 6 and Harrisburg No. 5 coal and other coals.

1.3 Licensor/Developer - COGAS Development Company
P.O. Box 8
Princeton, N.J. 08540

1.4 Commercial Applications - none.

2.0 Process Information

2.1 COED Pilot Plant

2.1.1 Pyrolysis Units (see Figure A-6)

Equipment

- Construction: four vertical, cylindrical vessels in series.
- Dimensions: P1 - 19.7m (6 ft); P2 - 14.8m (4.5 ft); P3 - 13.1m (4 ft); P4 - 8.2m (2.5 ft)[6].
- Bed type and gas flow: Gas flow to the first pyrolysis unit (P1) is recycled product gas. Gas from the units P2 and P3 goes to the product recovery unit. All beds are fluidized and involve countercurrent flow of gas and char. Char is fed forward from P1 through each stage to P4. Char transport from P2 to P3 is by gravity. Steam and oxygen are fed countercurrent to char in P4[1,5].

*ICGG consists of Northern Illinois Coal Gas Company, Peoples Gas Light & Coke Company, Central Illinois Light Company, Inc., Central Illinois Public Service Company, and North Shore Gas Company[3,4].

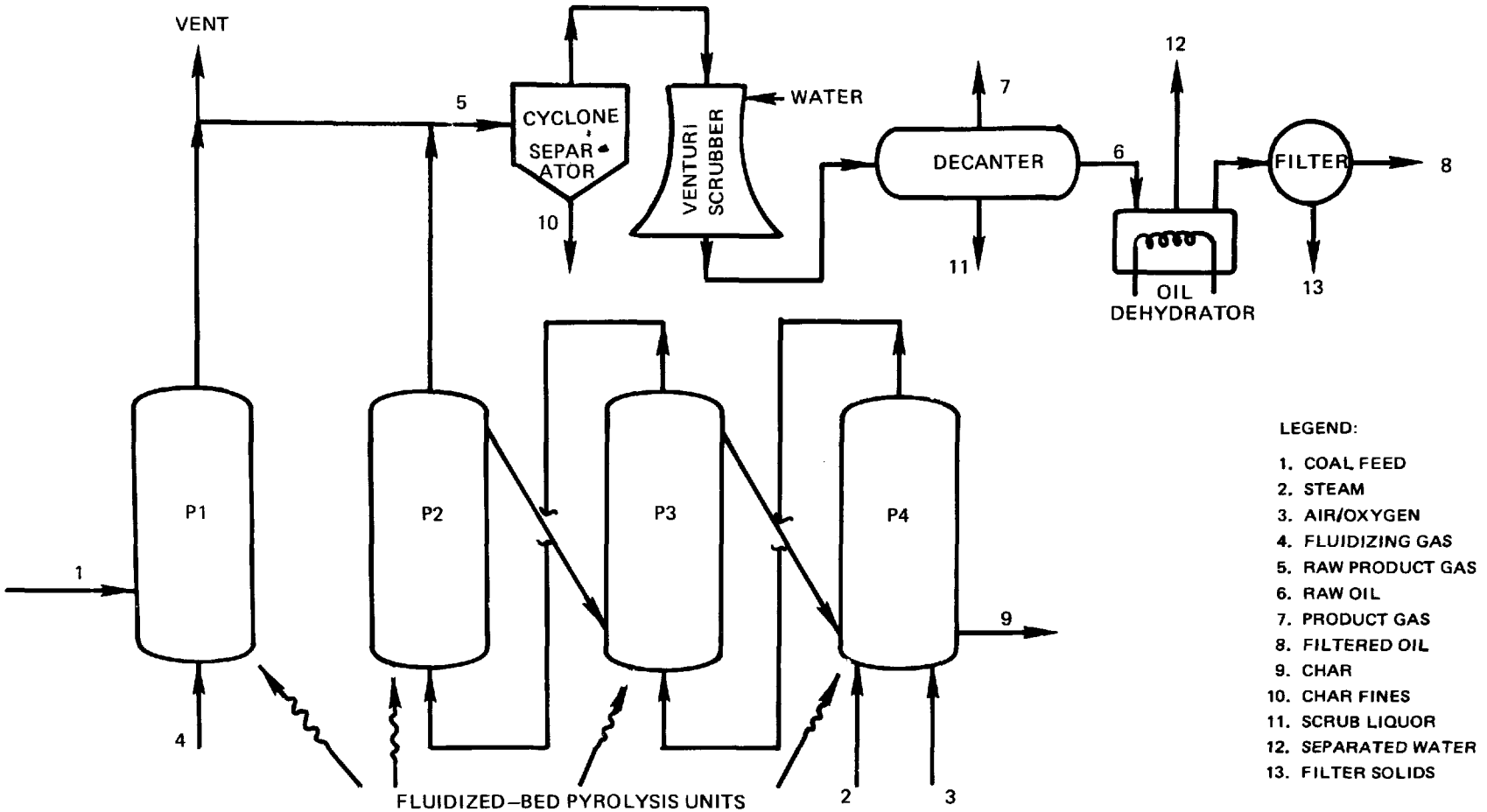

Figure A-6. COED Pilot Plant[8]

- Heat transfer and cooling: Gas/solids transfer in pyrolyzers. Furnace heats recycle gas prior to feed to P1[5].

- Coal feeding: Coal is fed to P1 pneumatically using a portion of the 1st-stage product gas[6].

- Gasification media introduction: Gas enters below fluidized bed in each pyrolyzer.

- Char removal: ?

Operating Parameters

- Gas outlet temperature: ?

- Coal bed temperature:

	^{o}K (^{o}F)		
	Design[7]	Western Kentucky[10]	Pittsburgh Seam[10]
P1	589 (600)	506 (450)	506 (450)
P2	728 (850)	681 (765)	664 (735)
P3	811 (1000)	747 (885)	728 (850)
P4	1089 (1500)	969 (1285)	922 (1200)

- Gasifier pressure[2]:

	MPa (psia)	
	Western Kentucky	Pittsburgh Seam
P1	0.143 (20.80)	0.145 (21.02)
P2	0.139 (20.11)	0.139 (20.21)
P3	0.146 (21.21)	9.150 (21.81)
P4	0.147 (21.32)	0.157 (22.71)

- Coal residence time in gasifier[2]:

	Min.	
	Western Kentucky	Pittsburgh Seam*
P1	95	160
P2	30	55
P3	12	35
P4	10	35

*Difference in feed rates (and residence times) are due to highly agglomerating characteristics of Pittsburgh coal.

Raw Material Requirements

- Coal feedstock: (See Table A-15)

  - Type: Essentially all types; feeds tested included Colorado Somerset C, Wyoming Monarch, Illinois No. 6 - both high volatile B and high volatile C bituminous coals, North Dakota Lignite, Utah A, Western Kentucky Seam Nos. 9 and 14, and West Virginia coal from Pittsburgh No. 8 Seam(1).

  - Size: Smaller than 16 mesh (1.08 mm) fed to 1st stage pyrolyzer(6).

  - Rate (wet): Nominal 1364 kg/hr (36 TPD); Western Kentucky 1159 kg/hr (30.6 TPD); Pittsburgh 636 kg/hr (16.8 tons/day)(2).*

- Coal pretreatment: Coal is dried at 463°K (375°F). For Pittsburgh coal, oxygen pretreatment was used(1).

- Steam(8,9,10)†: 0.15 - 0.69 kg/kg coal feed, dry basis. See Table A-16.

- Oxygen(8,9,10): 0.06 - 0.24 kg/kg coal feed, dry basis. See Table A-16.

Process Efficiency

- Cold product efficiency:

$$\frac{\text{Energy in product gas output}}{\text{Total energy in coal input}} \times 100 = ?$$

- Overall thermal efficiency(7):

$$\frac{\text{Total energy in product gas, tar, oil and by-products}}{\text{Total energy input in coal + electricity}} \times 100$$

= 84% (Utah coal)

= 79% (Illinois coal)

- Oil energy efficiency(7).

$$\frac{\text{Total energy in syncrude}}{\text{Total energy in coal}} \times 100 = 32\%, \text{ Utah coal}$$

$$= 23\%, \text{ Illinois coal}$$

*Difference in feed rates (and residence times) are due to highly agglomerating characteristics of Pittsburgh coal.
†Used for bed fluidization and heating.

TABLE A-15. PROPERTIES AND FEED RATES OF COAL FEED (STREAM NO. 1)

Coal Origin	Colorado	Wyoming	Illinois	No. Dakota	Utah	Illinois	W. Kentucky	Pittsburgh
Coal Type	High Volatile B Bituminous	Sub Bituminous	High Volatile B Bituminous	Lignite	High Voltatile B Bituminous	High Volatile C Bituminous	High Volatile B Bituminous	High Volatile B Bituminous
Reference	8	8	8	9	9	9	10	10
Moisture %	6.0-15.0	14.7-22.6	11.0	12.2-25.9	2.7-4.0	8.3-9.6	0.88-5.1	2.3-4.0
Ultimate Analysis, wt. % dry								
Ash	6.9	17.7	12.4	7.7	6.0	10.9	9.7	8.4
C	73.4	57.7	67.0	59.8	75.0	67.5	71.8	73.8
H	5.4	4.5	4.7	4.6	5.8	4.9	5.0	5.3
O	12.1	15.7	11.0	26.3	10.6	11.1	8.8	2.4
S	0.6	0.6	3.7	0.6	0.6	4.3	3.2	3.9
N	1.6	0.8	1.2	0.9	1.6	1.3	1.5	1.2
HHV kcal/kg (Btu/lb)	7,430 13,380	6,110 11,000	6,980 12,556	5,890 10,610	7,555 13,600	6,794 12,230	7.230 13,020	7,500 13,500
Proximate Analysis, wt. % dry								
Volatile matter	37.7	40.3	38.1	47.0	42.2	38.6	35.9	40.2
Fixed carbon	55.4	42.0	51.9	44.7	50.2	50.4	54.2	51.4
Ash	6.9	17.7	64.	8.3	7.6	11.0	9.7	8.4
Coal Feed Rate, kg/hr (wet)	925 1,080	776 1,180	658 1,383	-- --	-- --	-- --	680 1,270	363 657

TABLE A-16. STEAM AND OXYGEN FEED RATES TO COED PILOT PLANT (STREAM NO. 2)

Coal Origin	Colorado	Wyoming	Illinois	No. Dakota	Utah	Illinois	W. Kentucky	Pittsburgh
Coal Type	High Volatile B Bituminous	Sub Bituminous	High Volatile B Bituminous	Lignite	High Volatile B Bituminous	High Volatile C Bituminous	High Volatile B Bituminous	High Volatile B Bituminous
Reference	8	8	8	9	9	9	10	10
Steam to P4	.20*	.19	.20	.18	.15	.20	.20	.39
(kg/kg coal)	.27*	.20	.31	.21	.18	.32	.37	.69
Oxygen to P4	.06	.13	.12	.08	.13	.11	.11	.14
(kg/kg coal)	.12	.16	.14	.09		.18	.16	.24

*Nitrogen used rather than steam.

TABLE A-17. PROPERTIES OF CHAR PRODUCED IN THE COED PILOT PLANT (STREAM NO. 9)

Coal Origin	Colorado	Wyoming	Illinois	No. Dakota	Utah	Illinois	W. Kentucky	Pittsburgh
Coal Type	High Volatile B Bituminous	Sub Bituminous	High Volatile B Bituminous	Lignite	High Volatile B Bituminous	High Volatile C Bituminous	High Volatile B Bituminous	High Volatile B Bituminous
Reference	8*	8*	8*	9	9	9	9	10
Production Rate								
kg/kg dry coal feed	.48 - .53	.32 - .44	.49 - .58	.56 - .62	.53 - .62	.58 - .64	.53 - .67	
Elemental Analysis, (wt. % dry)								
C	--	--	79.8	78.4	80.9	74.0	76.2	77.8
H	--	--	0.7	1.4	1.3	0.9	1.9	2.7
O	--	--	2.1	3.5	0.4	0.3	2.1	1.7
N	--	--	1.0	0.7	1.4	1.1	2.0	1.4
S	--	--	2.1	0.8	0.5	2.5	3.3	3.7
Proximate Analysis, (wt. % dry)								
Volatile matter	--	--	4.2	8.5	6.6	3.8	6.5	6.4
Fixed carbon	--	--	81.5	76.2	77.7	74.9	78.9	81.1
Ash	--	--	14.3	15.3	15.7	21.3	14.6	12.5
HHV, kcal/kg	--	--	6130	6720	6767	6206	6697	7139
(Btu/lb dry)	--	--	(11030)	(12090)	(12180)	(11170)	(12055)	(12850)

*Wet coal feed basis.

- Expected turndown ratio: ?
- Gas production rate/yield[8,9,10]: 0.12 to 0.69 Nm^3/kg dry coal (2 - 12 scf/lb). See Table A-18.
- Oil production rates[8,9,10]: 0.04 - 0.20 l/kg (0.005 - 0.025 gal/lb) dry coal. See Table A-19.

2.1.3 Coal Feed/Pretreatment - Coal is ground by hammermills to minus 3 mm (1/8 in) size and fed to a dryer which is heated by recycled hot product gas[8]. Dried coal exits at 463°K (375°F) for feeding to P1[7].

2.1.4 Quench and Dust Removal - Volatile products leaving P2 pass through three cyclones in series. Fines collected by the first two cyclones are returned to the second-stage pyrolyzer. Fines collected by the third-stage pyrolyzer are discarded. The gas is quenched in a venturi scrubber at 350°K (170°F)[6].

2.2 Char Gasification/Combustion Pilot Plant[11,12] - Flow Diagram (see Figure A-7)[4].

2.2.1 Gasifier (includes the combustor unit)

Equipment

- Construction: vertical, cylindrical steel.
- Dimensions: ?
- Bed type and gas flow:

  Gasifier - fluidized, countercurrent, gas/solids flow.
  Combustor - entrained, cocurrent gas/solids flow.

- Heat transfer and cooling: Water-cooled coils used in combustor. For other units, no data.
- Char feeding: ?
- Gasification media introduction: Continuous feeding of steam and air to bottoms of gasifier and combustor units, respectively.
- Ash removal: slagging combustor with ash removal from bottom of combustor. No quench data.

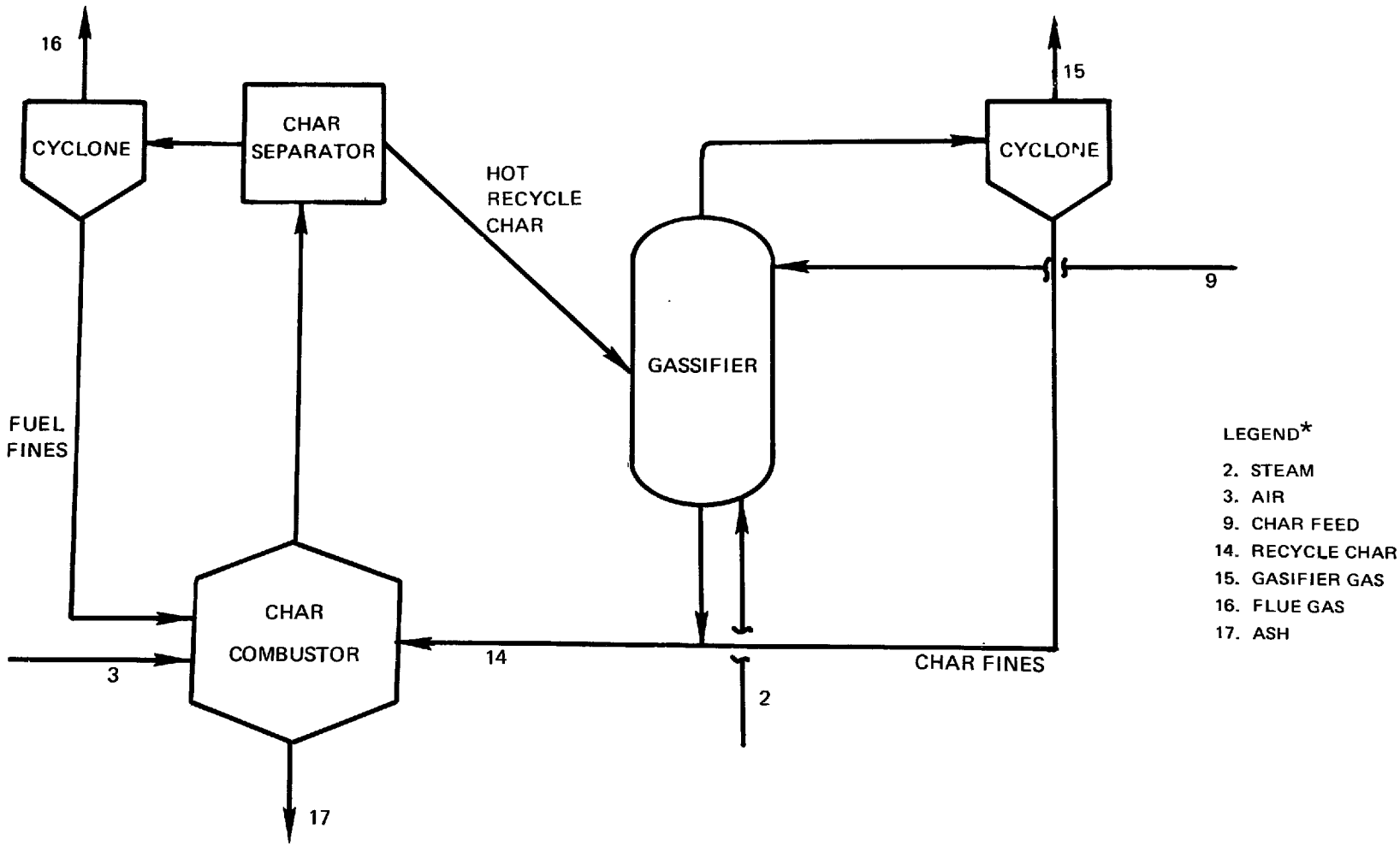

*The specific stream numbering system conforms to those used in Figures A-6 and A-8.

Figure A-7. Cogas Char Gasification Pilot Plant Unit-Char Heat-Carrier Process

TABLE A-18. PRODUCT GAS PRODUCED FROM THE COED PILOT PLANT (STREAM NO. 7)

Coal Origin	Colorado	Wyoming	Illinois	No. Dakota	Utah	Illinois	W. Kentucky	Pittsburgh
Coal Type	High Volatile B Bituminous	Sub Bituminous	High Volatile B Bituminous	Lignite	High Volatile B Bituminous	High Volatile C Bituminous	High Volatile B Bituminous	High Volatile B Bituminous
Reference	8*	8*	8*	9	9	9	9	10
Production Rate								
Nm^3/kg	.198-.246	.342-.428	.296-.509	.468-.690	.313-.407	.246-.640	.118-.149	.115-.132
(scf/lb dry coal)	(3.36-4.17)	(5.80-7.26)	(5.03-8.61)	(7.96-11.73)	(5.33-6.92)	(4.17-10.30)	(2.00-2.52)	(1.94-2.24)
Composition, vol %								
N_2	--	--	7.8	8.42	5.77	16.96	--	--
CO_2	--	--	22.4	28.79	23.25	22.30	13.9	11.0
CO	--	--	15.4	8.46	18.96	9.83	4.4	6.6
H_2	--	--	39.6	43.75	34.38	32.17	9.2	5.3
CH_4	--	--	9.6	9.36	14.62	13.21	12.2	8.6
C_2H_4	--	--	--	0.13	0.48	0.74	0.7	0.2
C_2H_6	--	--	0.4	0.22	0.90	1.01	0.8	0.9
C_3H_6	--	--	0.2	0.08	0.38	0.36	0.3	0.2
C_3H_8	--	--	0.1	0.15	0.33	0.30	0.3	0.2
C_4^+	--	--	0.3	0.15	0.52	0.20	0.3	0.3
H_2S	--	--	3.2	0.46	0.41	2.92	1.6	1.9
HHV								
$kcal/Nm^3$	--	--	3020	2520	3390	3050	2030	1600
(Btu/scf)	--	--	(340)	(283)	(381)	(343)	(228)	(180)

*Wet basis

TABLE A-19. PROPERTIES OF RAW OIL PRODUCED IN COED PILOT PLANT (STREAM NO. 6)

Coal Origin	Colorado	Wyoming	Illinois	No. Dakota	Utah	Illinois	W. Kentucky	Pittsburgh
Coal Type	High Volatile B Bituminous	Sub Bituminous	High Volatile B Bituminous	Lignite	High Volatile B Bituminous	High Volatile C Bituminous	High Volatile B Bituminous	High Volatile B Bituminous
Reference	8	8	8	9	9	9	9	10
Trace Elements, wt %								
Iron	--	--	--	0.033	0.023	--	0.02	--
Calcium	--	--	--	0.040	0.032	--	0.007	--
Sodium	--	--	--	0.025	0.047	--	0.001	--
Aluminum	--	--	--	0.013	0.062	--	0.005	--
Silica (as SiO_2)	--	--	--	0.030	0.210	--	0.007	--
Titanium	--	--	--	0.003	0.0042	--	--	--

Operating Parameters

- Gas outlet temperature: ?
- Char bed temperature: 1200°K (1700°F) in the gasifier; no data on combustor.
- Gasifier pressure: 0.15 - 0.20 MPa (22.0 - 29.4 psia).
- Char residence time in gasifier: ?
- Char circulation rate: ?

Raw Material Requirements

- Char feedstock*
  - Type: obtained from COED pyrolysis pilot plant.
  - Size: minus 1.6 mm (1/16 in).
  - Rate: 1894 kg/hr (50 tons/day)
- Steam: 0.797 kg/kg char (test FT8/2).
- Air: ?

Utility Requirements

- Water (26% of the heat in the combustor was lost to water-cooled coils - test FT8/2)
- Electricity: ?

Process Efficiency

- Cold gas efficiency:

$$\frac{\text{Product gas energy output}}{\text{Total energy in char feed}} \times 100 = 53\% \text{ (test FT8/2)}$$

- Overall thermal efficiency:

$$\frac{\text{Total energy in product gas, tar, oil and by-products}}{\text{Total energy in coal + electricity}} \times 100$$

= 69% (calculated theoretical)

*Char from COED pilot plant in Princeton, N.J.

Expected Turndown Ratio: ?

Gasifier Gas Production Rate/Yield: Carbon gasification rate of 0.203 kg C/hr/kg C in bed (Test FT8/2). 1.66 Nm^3/kg (28.2 scf/lb) of char.

2.2.2 Char Feed/Pretreatment - Char derived from COED pilot plant runs, no other pretreatment required.

2.2.3 Quench and Dust Removal - Cyclones on both gasifier gas and flue gas outlets. 7.3% of feed carbon rejected as dust in gasifier cyclone gas.

2.3 Proposed Demonstration Plant - A process flow diagram for an integrated COGAS plant is shown in Figure A-8 (4). Additional updated information about the proposed demonstration plant is not currently available.

3.0 Process Economics

No updated information is available for the integrated COGAS process.

4.0 Process Advantages

- COGAS is a low-pressure process not requiring expensive high pressure equipment.
- Does not require use of oxygen.
- Substantial quantities of synthetic oil and a gas suitable for production of pipeline quality gas can be yielded (approximately 40% of the total Btu output is in the syncrude).
- The coal pyrolysis step has been successfully demonstrated on a pilot scale.
- The integrated gasification/combustion step using char heat carrier has been demonstrated on a pilot scale.

5.0 Process Limitations

- Turndown ratio is limited due to the narrow range of operating conditions required to maintain fluidized beds.
- The integrated COGAS process (pyrolysis and gasification/combustion) has not been demonstrated.

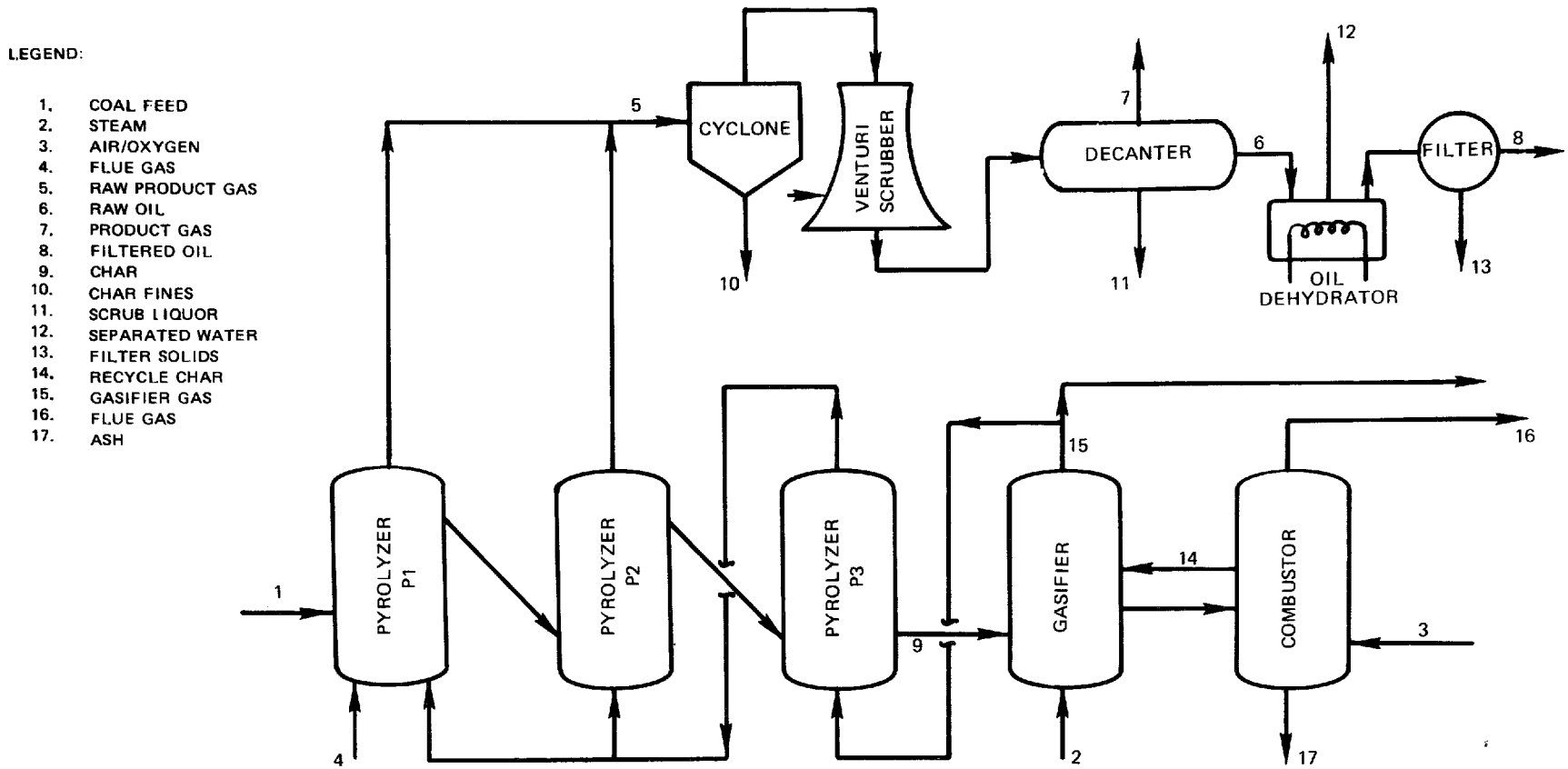

Figure A-8. COGAS Integrated Demonstration Plant[9]

- The synthetic oil produced requires hydrotreating before use as substitute for conventional petroleum products.
- Process is low pressure, therefore the product gas must be pressurized (at least for methanation and pipelining).

6.0 Input Streams

6.1 Coal Feed Rate (Stream No. 1) - No data for the integrated COGAS demonstration plant. See Table A-15 for coal feed rates and properties used in the COED pilot plant.

6.2 Steam (Stream No. 2) - No data for the integrated COGAS demonstration plant. Steam rate to gasifier in char gasification pilot plant was 0.79 kg/kg char (see Section 2.3)[12]. See Table A-16 for steam rates used in the COED pilot plant.

6.3 Air/Oxygen (Stream No. 3) - No data for the integrated COGAS demonstration plant. No data for the char gasification pilot plant. See Table A-16 for oxygen rates used in the COED pilot plant.*

6.4 Flue Gas (Stream No. 4) - Approximately 0.04 kg flue gas/kg coal (dry) was used in the COED pilot plant to fluidize P1 reactor (Figure A-6)[8,9,10].

7.0 Intermediate Streams

7.1 Char Feed (Stream No. 9) - No data for integrated COGAS demonstration plant. A char feed rate of 30-tonnes/day (34-tons/day) was used in the char gasification pilot plant[12]. See Table A-17 for properties of char produced in the COED pilot plant.

7.2 Recycle Char (Stream No. 14) - No data for integrated COGAS demonstration plant. No data for char gasification pilot plant.

7.3 Raw Oil (Stream No. 6) - See Table A-19 for rates and properties of raw oil produced in the COED pilot plant.

---

*In the integrated COGAS demonstration, air will be fed only to the combustor. Oyxgen was used in COED pilot plant, but integrated facility anticipates using air.

7.4 Gasifier Gas (Stream No. 15) - No data for the integrated COGAS demonstration facility. See Table A-20 for gasifier gas produced in char gasification pilot plant.*

8.0 Discharge Streams

8.1 Raw Pyrolysis Gas (Stream No. 5) - No data for the integrated COGAS demonstration facility. No data for raw pyrolysis gas produced in COED pilot plant.

8.2 Flue Gas (Stream No. 16) - No data for the integrated COGAS demonstration facility. No data for the char gasification pilot plant.

TABLE A-20. PROPERTIES OF GASIFIER GAS PRODUCED IN THE COGAS CHAR GASIFICATION PILOT PLANT (STREAM NO. 15)[12]

Production Rate, Nm^3/kg char	1.66
(scf/lb char)	(28.2)
Composition, vol. % (dry)	
H_2	53.4
CO	29.4
CO_2	15.8
CH_4	1.4
H_2S	--
N_2	0.0

*This stream will replace the steam and oxygen streams (2&3) used in the COED pilot plant.

8.3 Product Gas (Stream No. 7) - See Table A-18 for properties of product gas produced in the COED pilot plant.

8.4 Filtered Oil (Stream No. 8) - See Table A-21 for trace elements in filtered oil produced in the COED pilot plant. No other data available.

8.5 Scrub Liquor (Stream No. 11) - See Table A-22 for properties of scrub liquor produced in the COED pilot plant.*

8.6 Separated Water (Stream No. 12) - No data for the COED pilot plant.

8.7 Char Fines (Stream No. 10) - No data for the rate of char fines production. For properties of char fines produced in COED pilot plant, see Table A-23.

8.8 Filter Solids (Stream No. 12) - No data available.

8.9 Ash/Slag (Stream No. 17) - No data available.

9.0 Data Gaps and Limitations

Data gaps and limitations for the COGAS process relate primarily to the properties of various process and discharge streams. Since the coal pyrolysis and char gasification/combustion portions of the process have been tested at separate pilot plants, no data exist for integrated COGAS operation. Also, the nature of the downstream quench and gas/oil separation operations in the proposed COGAS demonstration plant are not known.

10.0 Related Programs

It is believed that the COGAS Development Company has considerable data on the COGAS process which are not publicly available at the present. The recently awarded DOE contract to ICGG for design of a COGAS demonstration plant is expected to result in the release of some of these data. However, release of such data is not expected to be prior to late 1978 or early 1979.

*Gas quench scheme is not known for the integrated COGAS demonstration facility.

TABLE A-21. TRACE ELEMENTS IN FILTERED OIL FROM COED PILOT PLANT (STREAM NO. 8)

Coal Origin	Colorado	Wyoming	Illinois	No. Dakota	Utah	Illinois	W. Kentucky	Pittsburgh
Coal Type	High Volatile B Bituminous	Sub Bituminous	High Volatile B Bituminous	Lignite	High Volatile B Bituminous	High Volatile C Bituminous	High Volatile B Bituminous	High Volatile B Bituminous
Reference	8*	8*	8*	9	9	9	9	10
Production Rate (l/kg dry coal)	.12 - .14	.07 - .09	.13 - .16	.04 - .05	.15 - .20	.19 - .20	.12 - .17	.14 - .15
Composition wt. % dry								
C	--	--	81.4	77.0	83.7	81.4	82.3	83.6
H	--	--	6.8	7.0	8.7	7.7	7.5	7.2
O	--	--	7.0	8.2	5.6	5.9	6.2	5.0
N	--	--	1.2	0.6	1.0	1.1	1.2	1.0
S	--	--	1.6	0.6	0.5	1.9	1.6	2.4
Ash	--	--	2.0	0.6	0.5	2.0	1.2	0.8
HHV, kcal/kg	--	--	8290	--	9110	--	8720	8830
(Btu/lb)	--	--	(14920)	--	(16400)	--	(15700)	(15900)
Quinoline Insolubles, wt %	--	--	--	26.7	2.9	6.5	5.3	8.0

*Wet coal

TABLE A-22. PROPERTIES OF SCRUB LIQUOR PRODUCED IN THE COED PILOT PLANT (STREAM NO. 11)†

Coal Origin	Colorado	Wyoming	Illinois	No. Dakota	Utah	Illinois	W. Kentucky	Pittsburgh
Coal Type	High Volatile B-Bituminous	Sub Bituminous	High Volatile B-Bituminous	Lignite	High Volatile B-Bituminous	High Volatile C Bituminous	High Volatile B Bituminous	High Volatile B Bituminous
Reference	8*	8*	8*	9	9	9	9	10
Production Rate								
ℓ/kg coal (dry) (gal/lb)	0.067-0.133 (0.008-0.016)	0.017-0.080 (-0.002-0.10)	0.292-0.458 (0.035-0.055)	0.031-0.062 (-0.004-0.008)	0.008-0.129 (0.001-0.015)	0.076 (0.009)	0.058-0.210 (0.007-0.025)	0.096-0.016 (0.001-0.002)
Elemental Composition								
N, wt %	--	--	0.98	0.75	1.40	0.89	0.41	0.78
C, wt %	--	--	--	2.30	2.00	2.00	1.10	0.86
S, wt %	--	--	0.25	0.52	0.02	0.16	0.16	0.38
Dissolved Solids, wt %	--	--	0.77	--	--	--	--	--
Suspended Solids, wt %	--	--	1.58	0.29	0.39	0.11	0.53	1.08
Phenol Content, wt %	--	--	0.41	1.04	0.54	0.68	0.17	0.20
pH	--	--	8.8	8.9	8.9	8.3	8.7	7.1
Entrained Oil, wt %	--	--	--	0.0	0.48	0.7	0.24	0.48

*Wet coal basis.

† Liquor yields represent total liquor effluent from plant including fluidizing stream.

TABLE A-23. PROPERTIES OF CHAR FINES PRODUCED IN THE COED PILOT PLANT (STREAM NO. 10)

Coal Origin	Colorado	Wyoming	Illinois	No. Dakota	Utah	Illinois	W. Kentucky	Pittsburgh
Coal Type	High Volatile B Bituminous	Sub Bituminous	High Volatile B Bituminous	Lignite	High Volatile B Bituminous	High Volatile C Bituminous	High Volatile B Bituminous	High Volatile B Bituminous
Reference	8	8	8	9	9	9	9	10
Moisture %	--	--	--	2.4	1.3	0.3	0.74	--
Ultimate Analysis, wt %								
C	--	--	--	72.2	83.6	68.5	77.3	--
H	--	--	--	2.0	1.7	2.1	2.6	--
N	--	--	--	0.9	1.5	1.0	1.6	--
S	--	--	--	0.5	0.8	3.2	2.7	--
O	--	--	--	8.0	1.7	2.8	5.6	--
Ash	--	--	--	16.4	10.7	22.4	10.2	--
Proximate Analysis, wt %								
Volatile matter	--	--	--	16.7	6.4	11.7	13.0	--
Fixed carbon	--	--	--	66.1	82.9	65.9	76.8	--
Ash	--	--	--	17.2	10.7	22.4	10.2	--
HHV, kcal/kg	--	--	--	6,150	7,150	6,140	6,900	--
(Btu/lb dry char)	--	--	--	(11,065)	(12,870)	(11,050)	(12,420)	--

REFERENCES

1. Merril, R.C., L.J. Scotti, et al, Clean Fuels from Eastern Coals by COED. Coal Processing Technology, AIChE publication, Vol. 2: 88-93, 1975.

2. Cameron Engineers, Inc. Synthetic Fuels Quarterly Report. Vol. 13, No. 1. Denver, Colorado, March 1976 pp B-28, B-35.

3. Cameron Engineers, Inc. Synthetic Fuels Quarterly Report. Vol. 14, No. 3. Denver, Colorado, September 1977. p. B-17.

4. The Dravo Corp. Handbook of Gasifiers and Gas Treatment Systems, Pittsburgh, Pa., February 1976. pp 39-44.

5. Strom, A.H., and R.T. Eddinger, COED Plant for Coal Conversion. Chemical Engineering Progress, Vol. 67, No. 3: 75-80, March 1971.

6. Jones, J.F., M.R. Schmid, et al, Char Oil Energy Development, Office of Coal Research, Washington, D.C., January 1965, 228 pp.

7. Scotti, J.L., L. Ford, et al, The Project COED Pilot Plant, Chemical Engineering Progress, Vol. 71, No. 4: 119-120, April 1975.

8. L.J. Scotti, B.D. McMunn, et al, Char Oil Energy Development, Research and Development Report No. 73, Interim Report No. 2, July 1972 - June 1973, FMC Corp. under contract to the Office of Coal Research of the Department of the Interior.

9. Scotti, J.L., R.C. Merrill, et al, Char Oil Energy Development, Interim Report No. 5, July 1973-June 1974, FMC Corp. under contract to ERDA.

10. Jones, J.F., M.J. Brunsvold, et al, Char Oil Energy Development, Vol. I, Final Report, August 18, 1971-June 30, 1975. FMC Corp. under contract to ERDA.

11. Bloom, Ralph, Jr., and R. Tracy Eddinger. Status of the COGAS Process. In: Sixth AGA Synthetic Pipeline Gas Symposium, Chicago, Ill., October 28-30, 1974, 22 pp.

12. Sacks, M.E. and R. Tracy Eddinger, Development of the COGAS Process, Princeton, N.J., January 1975, 11 pp.

HYGAS (STEAM-OXYGEN) PROCESS

1.0 General Information[1-4,13]

1.1 Operating Principles - High pressure moderate temperature coal gasification in four stages of fluidized beds using steam and oxygen.

1.2 Development Status - A 73-tonne/day (80-ton/day) Hygas pilot plant has been operating in Chicago, Illinois since 1971 under joint sponsorship by ERDA and the AGA (American Gas Association). The plant has tested Montana lignite, Illinois bituminous, and Montana subbituminous coals. Pilot plant operations have demonstrated the technical feasibility of the Hygas process for the gasification of lignite and pretreated bituminous coal (based on AGA/ERDA feasibility criteria). A conceptual design for a demonstration plant is currently being prepared by Procon under contract to ERDA. This plant will likely be based on the Hygas process (using the steam-oxygen version of the process).

1.3 Licensor/Developer - Institute of Gas Technology
3424 South State Street
Chicago, Illinois 60609

1.4 Commercial Applications - None.

2.0 Process Information

2.1 Pilot Plant (Figure A- 9)*[3]

2.1.1 Gasifier (Figure A-10)[1]

Equipment

- Construction: Vertical, cylindrical steel vessel encompassing 4 gas/solid contacting stages: slurry drying, first-stage

*Acid gss treatment, methanation, wastewater treatment, and certain other operations at the pilot plant are not shown in the figure.

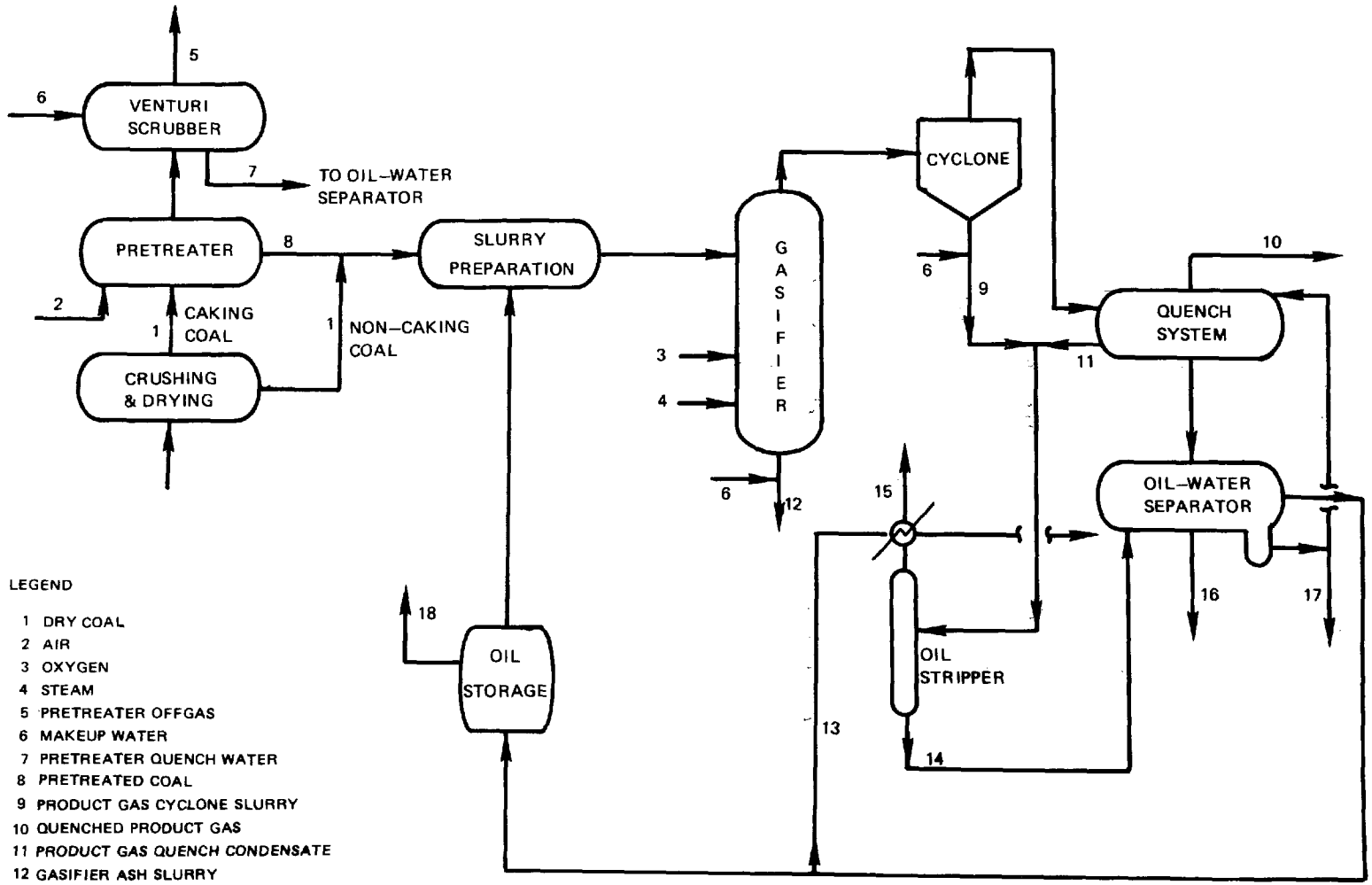

LEGEND

1 DRY COAL
2 AIR
3 OXYGEN
4 STEAM
5 PRETREATER OFFGAS
6 MAKEUP WATER
7 PRETREATER QUENCH WATER
8 PRETREATED COAL
9 PRODUCT GAS CYCLONE SLURRY
10 QUENCHED PRODUCT GAS
11 PRODUCT GAS QUENCH CONDENSATE
12 GASIFIER ASH SLURRY
13 RECYCLE/PRODUCT OIL
14 OIL STRIPPER BOTTOMS
15 OIL STRIPPER VENT GAS
16 SEPARATED WATER
17 SEPARATED SOLIDS/SLUDGES
18 OIL STORAGE VENT GAS

Figure A- 9. Hygas Pilot Plant Flow Diagram[1,14]

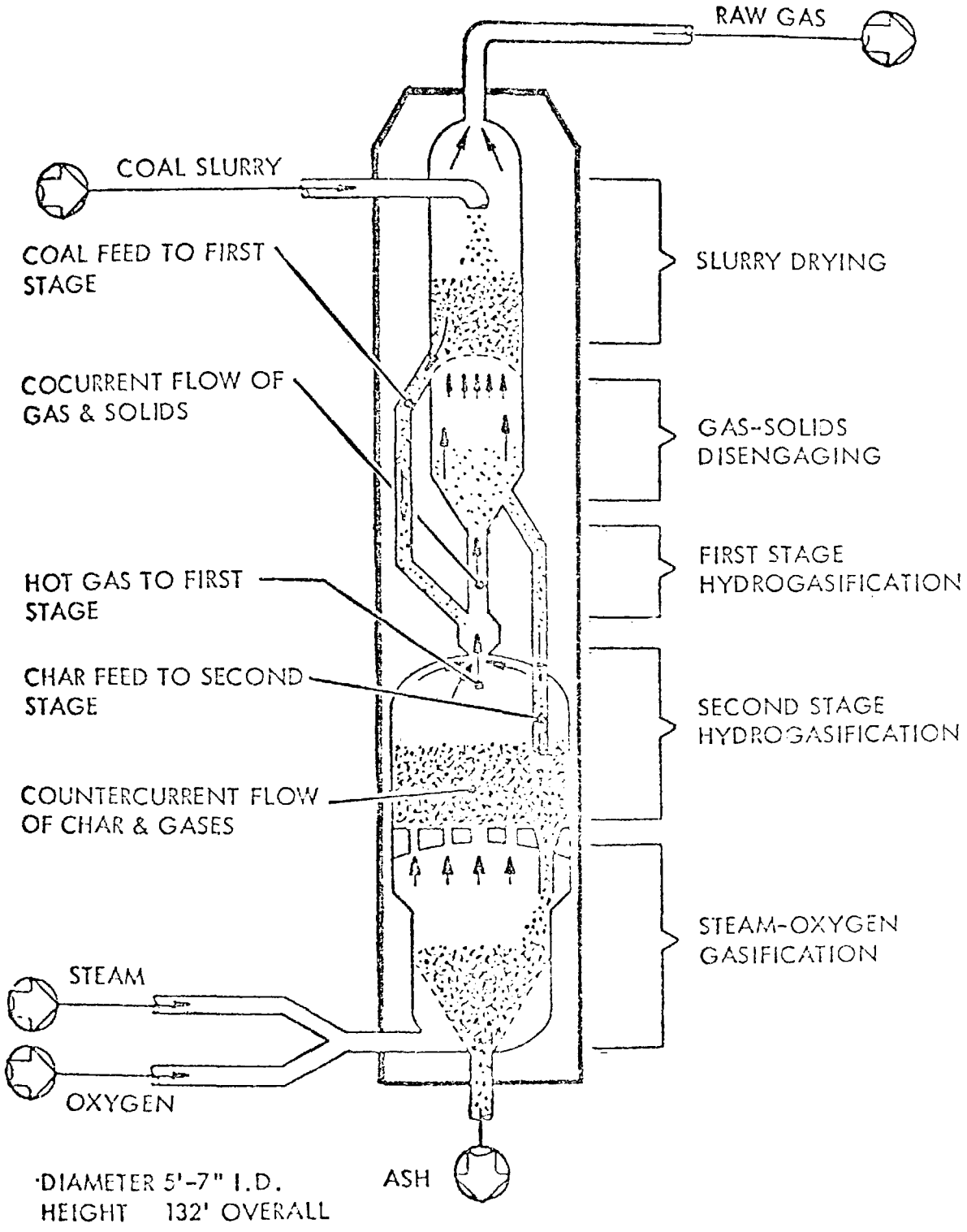

Figure A-10. HYGAS Pilot Plant Gasifier with Steam-Oxygen Gasification(2,14)

hydrogasification, second-stage hydrogasification and steam-oxygen gasification.

- Dimensions: The outer pressure vessel shell which encloses the four stages is 1.8m (5.9 ft) in diameter. The overall height, including skirt, to top gas outlet flange is 40m (131 ft). Slurry drying top chamber is 0.76m (2.5 ft) in diameter by 4.6m (13 ft) high. The first-stage hydrogasifier is a co-current upflow draft tube 0.1m (4 in.) I.D. by about 7.6m (25 ft) long. The second-stage hydrogasifier is approximately 0.76m (2.5 ft) I.D. by 9m (30 ft) high. The steam-oxygen gasifier is approximately 0.60m (2 ft) in diameter by 8m (26 ft) high.

- Bed type and gas flow: Fluidized bed with continuous counter-current gas flow, horizontal gas outlet after gas proceeds through slurry drying zone.

- Heat transfer and cooling: Adiabatic reactor with direct gas/solid heat transfer.

- Coal feeding: Coal/light oil mixture charged to gasifier using slurry pump (see Section 2.1.4).

- Gasification media introduction: Steam and oxygen are injected into the bottom fluidization zone of the Hygas reactor through a multiport sparger.

- Char removal mechanism: Char exits the bottom of the gasifier through a full-open ball valve into a quench vessel where it is first quenched with steam at reactor pressure. The char is then picked up in a water slurry and discharged through a Willis choke. Char is also separated from product gas by a cyclone.

- Special features: Conditions in the first stage hydrogasification zone of the reactor enhance methane formation.

<u>Utility Requirements</u>

Boiler feed water: ?

Cooling water: ?

Quench water blowdown:

Pretreater quench[8] - ~8 l/kg (1 gal/lb) Ill. bituminous

Product gas quench[1,8] - ~1 l/kg (0.12 gal/lb) lignite

~4 l/kg (0.5 gal/lb) Illinois bituminous

Electricity: ?

Process Efficiency

- Cold gas efficiency (these data are of less importance than carbon conversion efficiency for pilot plant operation) - see Table A-24:

  = (product gas energy output/coal energy input) x 100

  lignite: ?

  subbituminous (5): 58%

  bituminous[4]: 67%

- Overall thermal efficiency:

  $$= \frac{\text{Total energy output (product gas + HC byproducts + steam)}}{\text{Total energy input}} \times 100$$

  = ?

Raw Material Requirements

- Coal feedstock:

  Type - Three types of coal have been tested: Montana lignite, Illinois No. 6, and Montana subbituminous. Technical feasibility has been demonstrated on all three types.

  Size - minus 10 mesh

- Rate[3,4,5,14]: Run 37 - 1601 kg/hr (3530 lbs/hr)
  Run 54 - 2687 kg/hr (5912 lbs/hr)
  Run 58 - 2490 kg/hr (5478 lbs/hr)
  Run 61 - 1438 kg/hr (3164 lbs/hr)
  Run 63 - 1743 kg/hr (3834 lbs/hr)

- Pretreatment: Fluid bed pretreater for caking coal at 700°K (800°F)

TABLE A-24. OPERATING PARAMETERS FOR HYGAS PILOT PLANT

	Run 37*(3)	Run 54*(4)	Run 58*(5)	Run 61	Run 63
Coal bed temperature, ^{o}K (^{o}F)					
- Slurry drying	575 (575)	610 (580)	--	596 (616)	608 (634)
- 1st stage hydrogasifier	756 (901)	772 (854)	--	868 (1115)	894 (1149)
- 2nd stage hydrogasifier	1009 (1356)	982 (1335)	--	1050 (1424)	1030 (1393)
- Steam-oxygen gasification	1008 (1499)	1151 (1640)	1118 (1550)	1200 (1705)	1185 (1677)
Gasifier pressure, MPa (psia)	7.1 (1040)	6.6 (970)	6.2 (911)	6.0 (890)	7.0 (1025)
Carbon conversion (%)	90	74	67	90	71
Coal residence time in four stages:					
- Slurry drying	--	3 min	--	--	--
- 1st stage hydrogasification	--	--	--	--	--
- 2nd stage hydrogasification	42 min	23 min	--	--	--
- Steam-oxygen hydrogasification	41 min	17 min	--	--	--

*More than 65 runs have been made at the pilot plant, and a considerable amount of operating data has been generated. Data for steady periods with lignite (Run 37-1506 hr, 7/5/75 to 0694 hrs, 7/7/75), bituminous coal (Run 54-0000 hrs 7/10/76 to 0000 hrs, 7/11/76; Run 61-1200 hrs 5/9/77 to 1600 hrs 5/9/77; Run 63-1400 hrs 6/24/77 to 1000 hrs 6/25/77), subbituminuous coal (Run 58-0800 hrs 11/15/76 to 0800 hrs 11/16/76) were selected as representative of steady state operations for the three types of coals.

- Steam* and Oxygen:

	Run 37[3]	Run 54[5]	Run 58[5]	Run 61[14]	Run 63[14]
Steam (kg/kg coal)	1.46	1.03	1.25	2.66	2.1
Oxygen (kg/kg coal)	0.20	0.14	0.18	0.34	0.25

Expected Turndown Ratio

= [Full capacity output/minimum sustainable output] = ?

Gas Production Rate/Yield

Lignite[3]: 1.12 Nm^3/kg (18.9 scf/lb) quenched gas (Run 37)
Subbituminous[5]: 1.13 Nm^3/kg (19.1 scf/lb) quenced gas (Run 54)
Bituminous[4]: 1.04 Nm^3/kg (17.5 scf/lb) quenched gas (Run 58)
Bituminous[14]: 1.23 Nm^3/kg (20.8 scf/lb) quenched gas (Run 61)
Bituminous[14]: 1.08 Nm^3/kg (18.2 scf/lb) quenched gas (Run 63)

2.1.2 Coal Feed/Pretreatment (Figure A-9) - The pretreater is a fluidized-bed type reaction vessel whose major dimensions are 2.5m (8 ft) in I.D. by 9.9m (30 ft) seam-to-seam. Air is compressed to provide the fluidizing medium (this air is also used as an in-process oxidant). The offgas from the pretreater enters two internal cyclones where entrained fines are returned to the bed. In the pilot plant, the resulting offgas from the pretreater is incinerated.

The pretreater bed operates at about 700°K (810°F). To cool the pretreated char from 700°K down to 363°K (180°F), a pretreated char cooler is utilized (closed vessel).

*Steam is also added to the pretreater (along with air) in amounts ranging from 0.2 - 0.35 lbs/lb feed coal[14].

Cooled char is discharged into the char storage hopper and later sent to the reactor. The vapors from the char cooler proceed to a quench system.

2.1.3 Quench and Dust Removal (see Figure A-9) - Entrained dust is removed from the gasifier product gas by dry cyclones and is discharged through a quench system. The raw gas is quenched with an externally cooled recycled aqueous condensate. The resulting oil-water liquor is decanted. Most of the aqueous phase is cooled and recycled to quench; the net incremental aqueous condensate is discharged to an oil/water/solids separation unit. The oil condensate is recycled to the slurry mix tank.

2.1.4 Coal Feed to Gasifier (see Figure A-9) - Minus 10 mesh coal feed is mixed with a light aromatic oil (mostly toluene) to form a slurry which is charged to the high-pressure reaction system by a slurry pump. The oil in excess of recycle requirements is a byproduct of the process. The slurry liquid must be evaporated before the dried coal enters the actual reaction zone. This drying is done in a fluidized bed using effluent gases from the first-stage reactor to provide the heat.

3.0 Process Economics[11]

Based on a preliminary conceptual design of a 7×10^6 Nm^3/day (250×10^6 scfd) commercial Hygas (steam-oxygen) plant, capital investment for an integrated facility is estimated at $\$880 \times 10^6$ (1976). The gasification section of such a plant (including coal feeding and quench) accounts for about 14% of the overall plant cost.

4.0 Process Advantages

- The technical feasibility of the process has been demonstrated in pilot plant operations.
- Can use essentially any coal, caking or noncaking
- Two-thirds of product methane is produced in the gasifier, thus reducing downstream methanation requirements.

- Product gas is at pipeline pressure.
- Coal feeding system has proved to be a reliable technique for feeding coal at high pressure.

5.0 Process Limitations

- The carbon contained in char collected by the product gas cyclone system represents a thermal penalty for the process unless the char can be returned to the gasifier or otherwise utilized.
- Hydrocarbon and energy values of pretreater offgas are high and would require recovery in a commercial operation.
- Net production of oil has not been demonstrated in the pilot plant. Toluene solvent is expensive and would affect the economics of operation if the process is a net consumer of solvent.

6.0 Input Streams (see Figure A-9)

6.1 Coal (Stream 1) - see Table A-25.

6.2 Steam (Stream 3) - see Section 2.1.1

6.3 Oxygen (Stream 4) - see Section 2.1.1

6.4 Air (Stream 2) - Run 54-0.12 Nm^3/kg (1.97 scf O_2/lb) coal
- Run 61-0.11 Nm^3/kg (1.9 scf O_2/lb) coal
- Run 63-0.12 Nm^3/kg (2.1 scf O_2/lb) coal

6.5 Recycle Oil Product (Stream 13) - see Table A-26. Coal/solvent ratios are 0.26 for lignite[3] and 0.31 for bituminous[4].

6.6 Make-up Water (Stream 6) - see Table A-27.

7.0 Intermediate Streams (see Figure A-9)

7.1 Pretreated Coal (Stream 8) -

Run No.	Kg char/Kg coal
54	0.81
61	0.79 - 0.84
63	0.76 - 0.78

7.2 Product Gas Cyclone Slurry (Stream 9) - see Table A-28.

7.3 Gasifier Ash Slurry (Stream 12) - see Table A-29.

7.4 Pretreater Quench Water (Stream 7) - see Table A-30.

7.5 Product Gas Quench Condensate (Stream 11) - see Table A-31.

7.6 Oil Stripper Bottoms (Stream 14) - see Table A-32.

8.0 Discharge Streams (see Figure A- 9)

8.1 Quenched Product Gas (Stream 10) - see Table A-33.

8.2 Pretreater Offgas (Stream 5) - see Table A-34. Sulfur balance data indicate that about 23-25% of input sulfur is released from Illinois bituminous coal during pretreatment and exits as gaseous sulfur compounds in the pretreater offgas[15].

8.3 Oil Stripper Vent Gas (Stream 15) - see Table A-35.

8.4 Oil Storage Vent Gas (Stream 18) - see Table A-36.

8.5 Separated Water (Stream 16) - no data available.

8.6 Separated Solids/Sludges (Stream 17) - no data available.

TABLE A-25. HYGAS PILOT PLANT INPUT COAL (STREAM NO. 1)*

Run No. (Reference)	37[3]	54[4]	58[5,8†]	61[14]	63[14]
Coal Type	Lignite	Bituminous	Subbituminous	Bituminous	Bituminous
Feed Rate, kg/kg (lbs/hr)	1600(3530)	2687(5412)	2490(5478)	---	---
HHV - kcal/kg (Btu/lb)	--	7100(12780)	6272(11289)	6833(12300)	6833(12300)
Size	minus 8 mesh	minus 8 mesh	minus 8 mesh	minus 8 mesh	minus 8 mesh
Composition, wt % dry					
C	61.3	73.9	67.5	59.6	59.6
H	4.2	5.0	4.4	4.93	4.93
O	20.1	8.3	16.7	9.22	9.22
N	0.97	1.5	0.90	1.32	1.32
S	0.88	2.76	0.94	4.32	4.32
Ash	12.6	8.5	9.5	10.6	10.6
Moisture	15.8	2.2	8.8	5.8	5.8
Volatile matter	40	35	48	37	37
Trace elements (ppm)					
Fe	--	--	3300	--	--
Ba	--	--	750	--	--
Mn	--	--	150	--	--
Ni	--	--	2.6	--	--
Zn	--	--	22	--	--
Li	--	--	14	--	--
Cr	--	--	6.2	--	--
Cu	--	--	7.3	--	--
Cd	--	--	0.06	--	--
Pb	--	--	5.6	--	--
Hg	--	--	0.026	--	--
Mo	--	--	--	--	--
B	--	--	70	--	--
Be	--	--	0.36	--	--
F	--	--	31	--	--
Tl	--	--	0.04	--	--
V	--	--	9	--	--

*Tables A-17 through A-27 contain data for one or more of the following runs at the Hygas Pilot Plant - Nos. 37, 54, 58, 61, 63. All of the data in these tables represent steady state periods of operation. Runs were chosen for data presentation partially on the basis of data availability and partially to represent the four coal types tested - lignite, subbituminous, medium sulfur bituminous, high sulfur bituminous.

†Trace element data from Reference 8.

TABLE A-26. COMPOSITION OF HYGAS RECYCLE/PRODUCT OIL (STREAM NO. 13)

Run No. (Reference)	37(7*)	54(4)	56(7†)
Coal Type	Lignite	Bituminous	Subbituminous
Oil Composition (wt %)			
Aliphatics	1.08	--	2.39
Olefins	--	--	2.18
Benzene	6.94	--	7.0
Toluene	85.2	--	81.0
Ethyl Benzene	0.17	--	0.46
C_3-C_6 Benzene	1.18	--	1.48
Xylenes	0.45	--	1.36
Indanes, Indenes and Alkylindenes	1.41	--	0.78
Phenol	<.1	--	
Cresols	0.42	--	
C_2 Phenols	0.47	--	<.5
C_3 Phenols	0.13	--	
Naphthalene	0.77	--	1.79
Methylnaphthalenes	0.40	--	0.32
C_2-C_5 Naphthalenes	0.40	--	0.21
Biphenyl	0.054	--	0.06
C_1-C_3 Biphenyls	0.032	--	0.058
Acenaphthenes	0.11	--	0.02
Fluorenes	0.11	--	0.076
Phenanthrene	--	--	0.04
Anthracene	--	--	0.01
Pyrene	0.027	--	--
Acetone	--	--	0.02
2-Butanone	--	--	0.06
Furans	--	--	0.20
Elemental Composition			
Carbon	91.3(3)	91.3(4)	--
Hydrogen	8.7	8.7	--
Oxygen	--	--	--
Sulfur	--	--	--

*Single sample July 3, 1975
†Composite for 37 hrs.

TABLE A-27. CONSTITUENTS CONTRIBUTED BY MAKE-UP WATER*(15) AT THE HYGAS PILOT PLANT

Constituents	Run No.	
	60	63
Phenols	0.004	0.34
NH_3	0.03	0.31
TOC	0.24	0.74
$S^=$	0.00009	0.0004
CN^-	0.00003	0.00005
SCN^-	0.03	0.010
TDS	3.76	2.31
TSS	0.36	0.13
Cl^-	0.87	0.35
Hexane Solubles	0.12	0.06

*Units are in kg/10^3kg of MAF pretreated char; concentration data not available.

TABLE A-28. HYGAS PRODUCT GAS CYCLONE SLURRY* (STREAM NO. 9)

Run No. (Reference)	37(3)	54(4,7†)	58(8†, 12‡)	61(15)	63(15)
Slurry Flow Rate - l/kg coal (gal/lb)	1.4 (0.18)	-1 (.12)	1.1 (0.14)	--	--
Solids Flow Rate - kg/kg coal	0.27	0.081	--	--	--
Slurry Composition - (mg/l)					
Phenols	--	.394	2455	--	--
NH_3	--	439	257	--	--
TOC	--	509	1518	--	--
$S^=$	--	76	34	--	--
CN^-	--	.004	<.01	--	--
SCN^-	--	31	198	--	--
TDS	--	432	669	--	--
TSS	--	15,700	26,000	--	--
Cl^-	--	--	51	--	--
Hexane Solubles	--	--	2190	--	--
pH	--	8.0	7.1	--	--
Trace Elements (mg/l)					
Ca	--	--	18,900	--	--
Mg	--	--	12,800	--	--
Na	--	--	60,600	--	--
Ag	--	--	<25	--	--
Al	--	--	895	--	--
B	--	--	19,000	--	--
Ba	--	--	5,390	--	--
Be	--	--	<2	--	--
Cd	--	--	28	--	--
Co	--	--	<10	--	--
Cr	--	--	58	--	--
Cu	--	--	18	--	--
Fe	--	--	851	--	--
Mn	--	--	24	--	--
Mo	--	--	11	--	--
Ni	--	--	<50	--	--
Pb	--	--	<60	--	--
Sn	--	--	<100	--	--
Ti	--	--	131	--	--
V	--	--	<200	--	--
Y	--	--	<10	--	--
Zn	--	--	142	--	--

(continued)

TABLE A-28. Continued.

Run No. (Reference)	37(3)	54(4,7†)	58(8†, 12‡)	61(15)	63(15)
Constituent Production Rate (kg/MAF§ tonne)					
Phenols	--	0.43	2.7	1.0	0.85
NH_3	--	0.47	0.28	0.73	0.30
TOC	--	0.50	1.7	7.8	8.0
$S^=$	--	0.06	0.04	0.28	0.25
CN^-	--	3.2×10^{-6}	5×10^{-5}	5×10^{-6}	1×10^{-5}
SCN^-	--	0.03	0.19	0.16	0.16
TDS	--	0.45	0.72	1.2	2.7
TSS	--	11	36	43	28
Oil	--	0.09	2.3	0.4	7.7
Solids Composition (wt %)					
C	49.6	80.5	--	--	--
H	3.3	2.7	--	--	--
N	5.6	4.6	--	--	--
S	0.7	2.6	--	--	--
O	0.5	2.0	--	--	--
Ash	41.5	8.7	--	--	--

*Data represent averages for each run.
†Production rate data from 7 and 8.
§Moisture ash free coal basis for Runs 37, 54 and 58; Moisture ash free char basis for Runs 61 and 63.
‡Trace element data from Ref. 12.

TABLE A-29. HYGAS GASIFIER ASH SLURRY* (STREAM NO. 12)

Run No. (Reference)	37(1,7†)	54(4,7§)	58(6,8‡)	61(15)	63(15)
Slurry Flow Rate - ℓ/kg MAF† coal (gal/lb)	5.1 (.64)	--	2.9 (.36)	--	--
Slurry Composition - (mg/l)					
Phenols	0.06	--	0.16	--	--
NH_3	5	--	3.7	--	--
TOC	243	--	78	--	--
$S^=$	<.01	--	.09	--	--
CN^-	<.001	--	<.005	--	--
SCN^-	4	--	1.5	--	--
TDS	815	--	436	--	--
TSS	4700	--	15979	--	--
Cl^-	--	--	41	--	--
Hexane Solubles	8	--	27	--	--
pH	9.2	--	8.5	--	--
Constituent Production Rate (kg/MAF tonne)					
Phenols	1.5×10^{-4}	0.005	3×10^{-4}	0.002	0.26
NH_3	0.026	1.3	0.23	1.0	0.37
TOC	1.25	0.35	0.011	6.7	1.4
$S^=$	$<1\times10^{-4}$	0.14	5×10^{-4}	0.08	0.15
CN^-	$<1\times10^{-5}$	1×10^{-5}	$<2\times10^{-5}$	8×10^{-6}	2×10^{-5}
SCN^-	0.022	0.02	0.0041	0.016	0.02
TDS	4.2	1.3	1.26	1.6	3.0
TSS	24	25	45	73	59
Oil	0.04	0.13	0.08	0.09	0.20
Solids Composition (wt %)					
C	34.5	76.8	--	--	--
H	0.76	1.3	--	--	--
O	3.3	1.4	--	--	--
N	0.2	0.6	--	--	--
S	0.2	0.6	--	--	--
Ash	61.1	19.3	--	--	--

(continued)

TABLE A-29. Continued.

Run No. (Reference)	37(1,7†)	54(4,7§)	58(6,8‡)	61(15)	63(15)
Trace elements (ppm)					
Fe	--	--	8,000	--	--
Ba	--	--	2,000	--	--
Mn	--	--	440	--	--
Ni	--	--	10	--	--
Zn	--	--	7.4	--	--
Li	--	--	45	--	--
Cr	--	--	20	--	--
Cu	--	--	17	--	--
Cd	--	--	0.07	--	--
Pb	--	--	15	--	--
Mo	--	--	--	--	--
B	--	--	200	--	--
Be	--	--	1	--	--
F	--	--	54	--	--
Tl	--	--	0.05	--	--
V	--	--	26	--	--
Hg	--	--	0.0032	--	--

*Data represent averages for each run
†Moisture ash free coal basis for Runs 37, 54 and 58; moisture ash free char basis for Runs 61 and 63
§Source of production rate data
‡Trace element data

TABLE A-30. HYGAS COAL PRETREATMENT QUENCH WATER* (STREAM NO. 7)

Run No. (Reference)	54(7)	59(8)	61(15)	63(15)
Flow Rate - l/MAF† kg coal (gal/MAF lb)	--	7.86 (0.97)	--	--
Composition (mg/l)				
Phenols	--	331	--	--
NH_3	--	26	--	--
TOC	--	1206	--	--
$S^=$	--	1.7	--	--
CN^-	--	0.003	--	--
SCN^-	--	316	--	--
TDS	--	4847	--	--
TSS	--	702	--	--
Cl^-	--	262	--	--
pH	--	6.2	--	--
Oil	--	239	--	--
Constituent Production Rate (kg/MAF† tonne)				
Phenols	1.2	2.6	1.7	2.0
NH_3	0.3	0.2	0.2	0.24
TOC	2.1	10	5.8	7.3
$S^=$	$5x10^{-7}$	0.015	$2.2x10^{-4}$	$3x10^{-4}$
CN^-	$1.1x10^{-5}$	$3x10^{-5}$	$5x10^{-5}$	$4x10^{-5}$
SCN^-	1.5	2.5	2.0	2.5
TDS	12	38	20	33
TSS	2.8	5.5	9.6	2.4
Oil	8.1	1.9	2.2	1.8

*Data represent averages for each run
†Moisture ash free coal basis for Runs 54 and 59; moisture ash free char basis for Runs 61 and 63.

TABLE A-31. HYGAS PRODUCT GAS QUENCH CONDENSATE* (STREAM NO. 11)

Run No. (Reference)	37(1,7‡)	54(7§)	57†(12)	58(6§,7,12#)	61(15)	63(15)
Flow Rate - l/kg MAF† coal (gal/lb)	1.1 (.14)	--	--	1.14 (.14)	--	--
Composition (mg/l)						
Phenols	2100	1230	--	4390	--	--
NH_3	3800	6550	--	6048	--	--
TOC	4000	1010	--	3324	--	--
$S^=$	125	1080	--	195	--	--
CN^-	<0.001	<0.001	--	0.01	--	--
SCN^-	360	100	--	214	--	--
TDS	1750	1090	--	2089	--	--
TSS	32	36	--	1011	--	--
Cl^-	--	--	--	6.5	--	--
Hexane Solubles	--	--	--	65	--	--
pH	8.3	7.8	--	7.4	--	--
Trace elements (mg/l)						
Ca	--	--	4200	108000	--	--
Mg	--	--	1600	28200		
Na	--	--	4800	133000	--	--
Ag	--	--	<13	<25	--	--
Al	--	--	150	<200	--	--
B	--	--	12000	251	--	--
Ba	--	--	140	211	--	--
Be	--	--	<1	<2	--	--
Cd	--	--	<10	<20	--	--
Co	--	--	<5	<10	--	--
Cr	--	--	<12	<24	--	--
Cu	--	--	15	<4	--	--
Fe	--	--	76	2270	--	--
Mn	--	--	40	206	--	--
Mo	--	--	<5	<10	--	--
Ni	--	--	<25	81	--	--
Pb	--	--	<30	<60	--	--
Sn	--	--	<50	<100	--	--
Ti	--	--	5	11	--	--
V	--	--	<100	<200	--	--
Y	--	--	<5	<10	--	--
Zn	--	--	37	63	--	--
Production Rate (kg/MAF‡ tonne)						
Phenols	2.6	1.1	--	5.0	1.9	0.8
NH_3	4.6	6.0	--	6.9	7.2	5.5
TOC	5.0	0.9	--	3.8	1.7	2.7
$S^=$	0.14	0.7	--	0.22	1.0	0.75
CN^-	1.4×10^{-6}	2.5×10^{-6}	--	1×10^{-5}	2×10^{-5}	2×10^{-4}
SCN^-	0.44	0.09	--	0.25	0.2	0.15
TDS	2.2	1.0	--	2.3	2.7	2.2
TSS	0.12	0.025	--	1.1	1.8	11
Oil	0.08	0.013	--	0.08	0.021	0.11

*Data represent averages for each run
†Run 57 used subbituminous coal
§Source of production rate data
‡Moisture ash free coal basis for Runs 37, 54 and 58; moisture ash free char basis for Runs 61 and 63
#Trace element for Run 58 is from Ref. 12

TABLE A-32. HYGAS OIL STRIPPER BOTTOMS* (STREAM NO. 14)

Run No. (Reference)	37(1,7†)	54(4)	58(7)	61(15)	63(15)
Flow Rate - l/MAF‡ kg (gal/lb)	2.1 (.026)	--	2.6 (.32)	--	--
Composition (mg/l)					
Phenols	1400	--	1770	--	--
NH_3	200	--	118	--	--
TOC	6000	--	1360	--	--
$S^=$	<0.03	--	3.6	--	--
CN^-	<0.003	--	0.006	--	--
SCN^-	330	--	97	--	--
TDS	950	--	577	--	--
TSS	41000	--	16300	--	--
Cl^-	--	--	34	--	--
Hexane Solubles	7000	--	1290	--	--
pH	9.9	--	8.0	--	--
Production Rate (kg/MAF‡ tonne)					
Phenols	3.0	0.60	4.6	1.2	1.1
NH_3	0.42	0.65	0.28	0.37	0.75
TOC	7.4	0.75	3.2	5.7	6.7
$S^=$	$<1x10^{-4}$	0.02	0.009	0.04	0.11
CN^-	$<1x10^{-5}$	$<1x10^{-5}$	$1x10^{-5}$	$2x10^{-5}$	$2x10^{-5}$
SCN^-	0.7	0.03	$6x10^{-4}$	0.28	0.25
TDS	2.0	1.0	1.6	1.6	2.4
TSS	86	17	58	57	74
Oil	12	0.32	4.6	0.34	1.0

*Data are averages for each run
†Source of production data
‡Moisture ash free coal basis for Runs 37, 54 and 58; moisture ash free char basis for Runs 61 and 63

TABLE A-33. HYGAS QUENCHED PRODUCT GAS (STREAM NO. 13)

Run No. (Reference)	37*(3)	54*(15)	58(15)	61(15)	63(15)
Production Rate - Nm^3/kg coal (scf/lb)	1.15 (18.9)	1.13 (19.1)	1.00 (17.0)	1.23 (20.8)	1.07 (18.2)
Composition					
H_2	37.40	26.12	29.56	33.22	30.06
CO_2	33.03	27.57	32.93	27.99	30.74
C_2H_6	0.14	0.4	1.2	0.51	0.58
N_2 + Ar	8.05	7.1	4.10	7.82	8.68
H_2S	0.23	0.69	0	1.71	1.37
CH_4	13.41	28.14	21.21	19.16	20.49
CO	7.74	10.02	10.91	9.59	8.08
COS	--	--	--	--	--
CS_2	--	--	--	--	--
RSH	--	--	--	--	--
NH_3	--	--	--	--	--
HCN	--	--	--	--	--
HHV (kcal/Nm^3) Btu/scf	2370 (284)†	3410 (409)†	--	--	--

*Run 37 - 1506 hrs 7/5/75 to 0694 hrs 7/7/75; Run 54 - 0000 hrs 7/10/76 to 0000 hrs 7/11/76; Run 58 - 1400 hrs 11/14/76 to 0800 hrs 11/15/76; Run 61 - 1200 hrs 5/9/77 to 1600 hrs 5/9/77; Run 63 - 1400 hrs 6/24/77 to 1000 hrs 6/25/77.

†Calculated from composition

TABLE A-34. HYGAS PRETREATER OFFGAS (STREAM NO. 5)[15]

Run No.	34*	61†	63§
Flow Rate, Nm^3/kg (scf/lb) coal	1.38 (23.4)	1.19 (20.2)	1.25 (21.2)
Composition (vol %)			
H_2	0.20	0.37	0.06
CO_2	4.96	3.75	4.81
C_2H_6	0.03	0.05	0.04
O_2/Ar	1.98	2.44	1.93
N_2	4.27	43.3	44.9
CH_4	0.55	0.19	0.16
CO	1.48	3.32	3.91
H_2O	48.1	46.6	44.2

*1800 hrs 7/3/76 to 0030 hrs 7/7/76

†1300 hrs 5/8/77 to 2400 hrs 5/8/77

§1400 hrs 6/24/77 to 1700 hrs 6/25/77

TABLE A-35. HYGAS OIL STRIPPER VENT GAS* (STREAM NO. 15)

Flow Rate - Nm^3/kg coal (scf/lb)	(0.54)
Composition (vol %)	
N_2	20.0
CO	0.7
CO_2	58.1
H_2	10.9
H_2S	0.1
CH_4	8.0
C_2H_6	0.64
C_3H_8	0.23
C_4H_{10}	0.17
C_5^+	--
	98.8

*Steady state period 1506 hr 7/5/75 to 0694 hrs 7/7/75.

TABLE A-36. HYGAS OIL STORAGE VENT GAS* (STREAM NO. 18)

Run No. (Reference)	37(1)
Composition (vol %)	
N_2	5.3
CO	1.4
CO_2	67.3
H_2	9.0
H_2S	0.6
CH_4	10.9
C_2H_6	1.1
C_3H_8	0.44
C_4H_{10}	0.43
C_5H_{12}	0.12
C_3H_6	0.14
C_4H_8	0.4
C_5H_{10}	0.17
C_6+	--

*Steady state period 1506 hrs 7/5/75 to 0694 hrs 7/7/75.

9.0 Data Gaps and Limitations

Data gaps and limitations relate primarily to composition and flow rates of specific pilot plant streams during representative steady state periods of operation. Major gaps include the following:

- Data on the composition of product or recycle oil during bituminous coal gasification are not available. Trace organic sulfur and nitrogen constituents in Hygas oil(s) are not known.
- No data are available for sulfur compounds other than H_2S, or for HCN and NH_3 in quenched product gases from any of the coals gasified at the pilot plant.
- For the major liquid discharge (or intermediate) pilot plant streams, no data are available on trace organic substances.
- No composition data are available for solids/sludges (Stream 17) or water generated by the Edens separator and associated filtration operations.
- Although, as presented above, some data are available on the characteristics of a number of input and discharge streams of the subject process, the available data are not comprehensive in that not all streams are addressed and not all potential pollutants and toxiciological and ecological properties are identified. An environmental data acquisition effort which would lead to the generation of the needed data corresponds to the EPA's phased level approach to multimedia environmental sampling and analysis[13].

10. Related Programs

As part of the environmental assessment of high-Btu coal gasification processes, DOE has contracted with the Institute of Gas Technology for sampling and analysis at the Hygas plant. Data will be generated for pilot plant operations at least through the calendar year 1978. Reports prepared by IGT and by Carnegie-Mellon University are expected to contain additional data on intermediate/discharge streams.

REFERENCES

1. M. J. Massey, R. W. Dunlap, et al, Characterization of Effluents from the Hygas and CO_2-Acceptor Pilot Plant, an interim report for the period July-September 1976 prepared by Carnegie-Mellon University, ERDA FE-2496-1, November 1976.

2. Handbook of Gasifiers and Gas Treatment Systems, a final report by Dravo Corp. to ERDA, ERDA Document No. FE-1772-11, February 1976.

3. Pipeline Gas from Coal-Hydrogasification (IGT Hydrogasification Process), Interim Report No. 2, July 1974-June 1975, ERDA Document No. FE-1221-144, 1975.

4. Bernard S. Lee, Current Development of the Hygas Program, presentation to the Eighth Synthetic Pipeline Gas Symposium, October 18-20, 1976.

5. Bernard S. Lee, Hygas Process Achieves 92% Coal Conversion, Oil and Gas Journal, August 1, 1977.

6. Anastasia, L.J., Environmental Assessment of the Hygas Process, Monthly Report for the Period Dec. 1 to Dec 31, 1976, ERDA Document No. FE-2433-7, February 1977.

7. Anastasia, L.J., Environmental Assessment of the Hygas Process, Quarterly Progress Report No. 2, Oct. 1 to Dec. 31, 1976, ERDA Document No. FE-2433-8, May 1977.

8. Anastasia, L.J., Environmental Assessment of the Hygas Process, Monthly Report for the Period April 1 to April 30, 1977, ERDA Document No. FE-2433-13, August 1977.

9. Anastasia, L.J., Environmental Assessment of the Hygas Process, Monthly Report for the Period March 1 to March 31, 1977, ERDA Document No. FE-2433-11.

10. Anastasia, L.J., Environmental Assessment of the Hygas Process, Monthly Report for the Period Jan. 1 to March 31, 1977, ERDA Document No. FE-2433-12, August 1977.

11. Detman, R.F., Preliminary Economic Comparison of Six Processes for Pipeline Gas from Coal, 8th Synthetic Pipeline Gas Symposium, Chicago, Ill., October 18-20, 1976.

12. Massey, J.M., et al, Environmental Assessment in the ERDA Coal Gasification Development Program Progress Report for the Period July 1976 to December 1976, Carnegie-Mellon University, ERDA Document No. FE-2496-6, March 1977.

13. Dorsey, J.A., and Johnson, L.D., Environmental Assessment Sampling and Analysis: Phased Approach and Techniques for Level 1, EPA-600/2-77-115, June 1977.

14. Pipeline Gas from Coal-Hydrogenation (IGT Hydrogasification Process) No. FE-2434-23, April 1978.

15. Anastasia, L.J., Environmental Assessment of the Hygas Process, Quarterly Progress Report No. 5 for the period July 1 to September 30, 1977, DOE No. FE-2433-20, March 1978.

CO_2 - ACCEPTOR PROCESS

1.0 General Information

1.1 Operating Principles - Moderate pressure gasification of coals in a bed fluidized by steam. Hot calcined limestone or dolomite (the "acceptor") is injected into the top of the gasifier to provide heat for gasification and to absorb carbon dioxide ($CaO + CO_2 = CaCO_3 + \Delta$). Carbonated acceptor and gasifier char are transferred from the gasifier to a regenerator vessel where residual carbon is burned in a bed fluidized by air and the acceptor is regenerated ($CaCO_3 + \Delta = CaO + CO_2$).

1.2 Development Status[6,10] - The CO_2 - Acceptor process has been under development by Consolidation Coal Company (CONSOL, now CONOCO) since the early 1960's. Under joint sponsorship by ERDA and the American Gas Association (AGA), a 36 tonne/day (40 ton/day) pilot plant was constructed in Rapid City, South Dakota in 1971. Since 1972, more than 42 runs have been made under the direction of CONOCO, using both North Dakota lignites and a Montana subbituminous coal. Two types of acceptors (Ohio dolomite and South Dakota limestone) have also been tested. During 1975, methanation of product gas was successfully demonstrated. Pilot plant operations demonstrated the technical feasibility of the CO_2-Acceptor process for gasification of lignite (based on AGA/ERDA technical feasibility criteria).

The pilot plant was closed down in the fall of 1977. (This facility has been modified for testing the Westinghouse gasification process.) CONOCO has prepared conceptual designs for a commercial plant based on the CO_2 - Acceptor process, although no commercial plant is currently planned.

1.3 Licensor/Developer - CONOCO Coal Development Company
Research Division
Library, Pennsylvania 15129

1.4 Commercial Applications - None.

2.0 Process Information

2.1 Pilot Plant (see Figure A-11, Flow Diagram)

2.1.1 Gasifier (see Figure A-12)

Equipment[3]

- Construction: vertical, cylindrical pressure vessel flanged at both ends. The pressure bearing wall is low carbon alloy steel with a stainless steel liner. Vessel is water jacketed and contains an internal cyclone at product gas exit.

- Dimensions[3]: 100cm (40 in) I.D. width
  166cm (77 in) O.D. width
  21mm (70 ft) total height
  13mm (42 ft) bed height

- Bed type and gas flow: Gasifier coal bed is fluidized by steam and recycle gas (during startup) to prevent acceptor agglomeration. Product gas flows counter-currently to acceptor solids and exits the gasifier at the top through an internal cyclone.

- Heat transfer and cooling: Hot calcined acceptor provides heat (sensible as well as chemical heat via exothermic reaction with CO_2 in the gasifier) for the gasification. Heat transfer is via direct gas-solids contact. Water jacket provides gasifier cooling.

- Coal feeding: Dried and preheated coal is transferred by gravity to the gasifier via a lockhopper system pressurized with recycle gas. (In the commercial plant CO_2 or flue gas would most likely be used.)

- Gasification media introduction: Steam for gasification is introduced at the lower portion of the fluidized bed near the point of coal injection. Steam is also injected at the bottom of the gasifier to strip char from the carbonated acceptor. Calcined acceptor is injected at the top of the gasifier and showers through the fluidized coal bed. Carbonated acceptor collects in a narrow throat at the bottom of the gasifier.

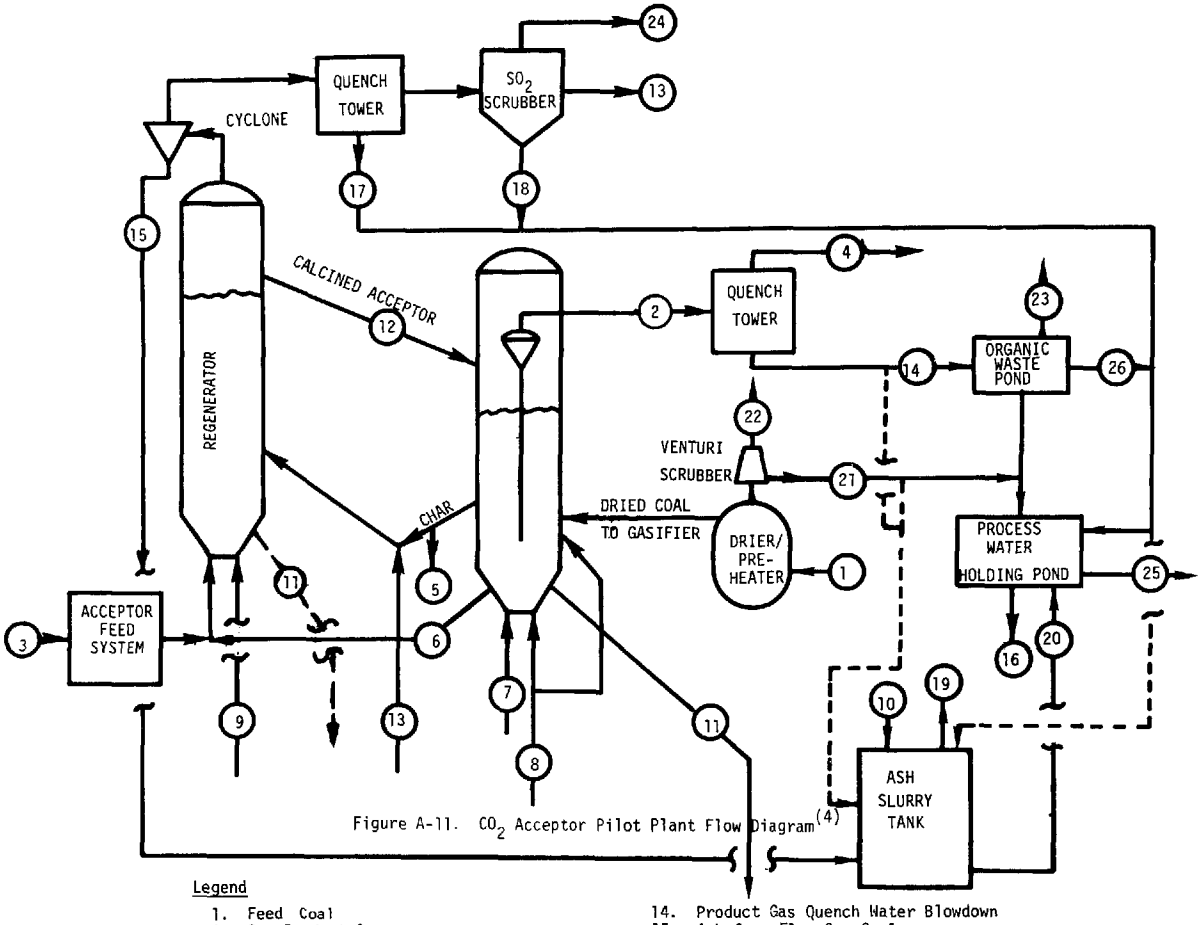

Figure A-11. CO_2 Acceptor Pilot Plant Flow Diagram[4]

Legend

1. Feed Coal
2. Raw Product Gas
3. Feed Acceptor
4. Quenched Product Gas (to flare)
5. Gasifier Char Blowdown
6. Recarbonated Acceptor
7. Recycle Gas
8. Steam
9. Air
10. Carbon Dioxide
11. Reject Acceptor (may be withdrawn from either the gasifier or regenerator)
12. Calcined Acceptor
13. Regenerator flue gas (to atmosphere or to recycle)
14. Product Gas Quench Water Blowdown
15. Ash from Flue Gas Cyclone
16. Pond Solids
17. Flue Gas Quench Water
18. SO_2 Scrubber Blowdown
19. Ash Slurry Tank Offgas
20. Ash Slurry Tank Effluent
21. Venturi Scrubber Blowdown
22. Drier/preheater Flue Gas
23. Depressurization Offgas (to flare)
24. SO_2 Scrubber Offgas (to flare)
25. Pond Effluent (to city sewer)
26. Product Gas Quench Solids

Figure A-11. CO_2-Acceptor Pilot Plant Flow Diagram[4]

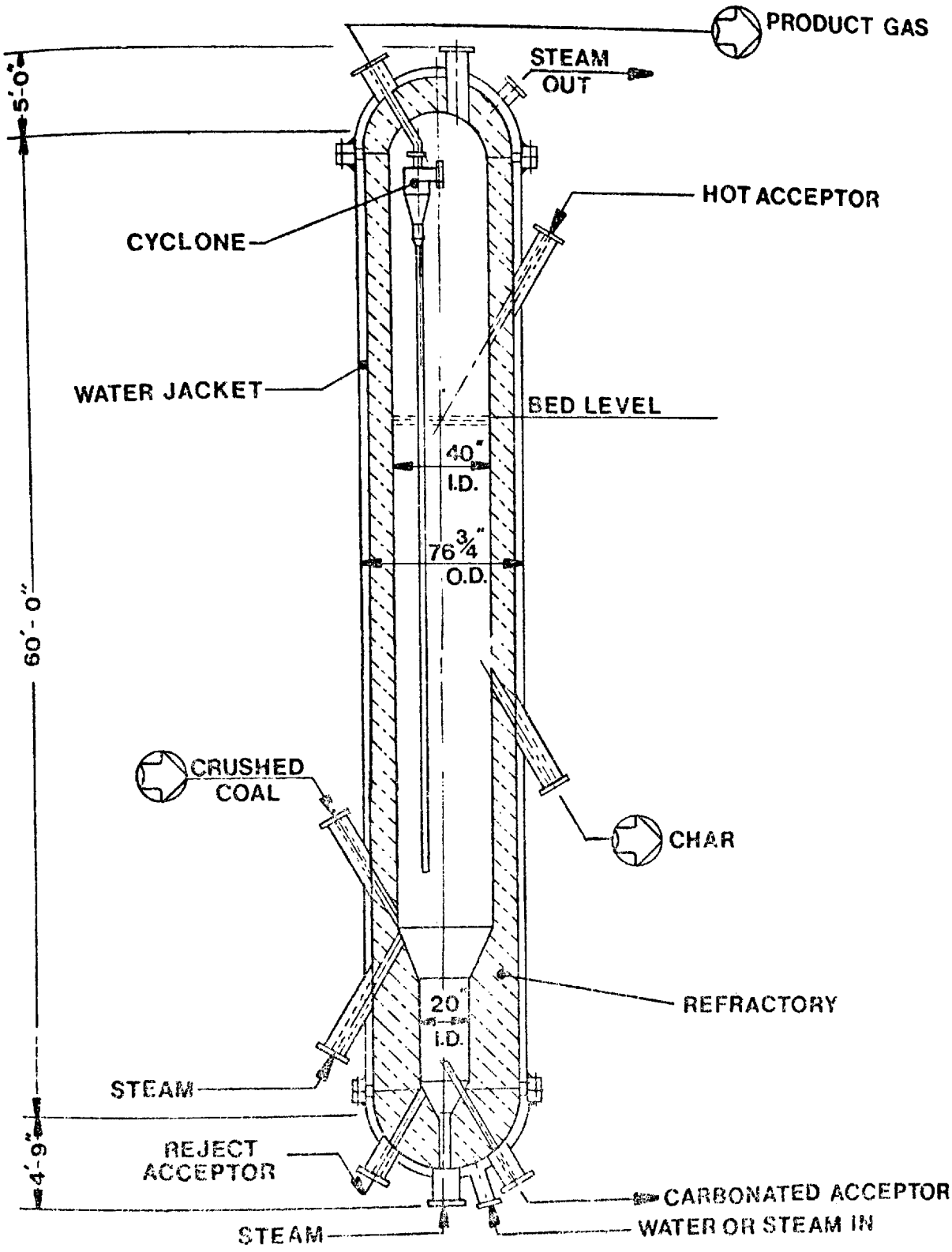

Figure A-12. CO_2-Acceptor Gasifier[3]

- Char and acceptor removal: Residual char is withdrawn from the gasifier near the top of the fluidized bed and is fed to the regenerator as fuel. A small fraction of the char also leaves the gasifier as overhead loss through the internal cyclone. Carbonated acceptor collects and is withdrawn at the bottom of the gasifier[2].

- Special features:

  Flow and pressure control - Solids flow through the three standlegs (transfer lines) between the gasifier and the regenerator (see Figure A-19) is controlled by butterfly valves. Seals between the two vessels are maintained by careful recycle gas pressure control.

Operating Parameters

- Gas outlet temperature: 1090°K (1500°F)
- Bed temperature[3]: 1090°K (1500°F)
- Pressure[3]: 1 MPa (10 atm)
- Coal residence time in gasifier (calculated from data in Reference 1): 250 min
- Gas residence time in gasifier[4]: ~30 sec in fluidized bed
- Acceptor circulation rate[1]: 3.6 kg/kg coal (based on Velva Lignite from N. Dakota and Tymochetee dolomite from Ohio)

Raw Material Requirements

- Coal feedstock:

  Type - non-caking coals (lignite, subbituminous)
  Size[3] - +100 - 8 mesh (.147-2.3 mm)
  Rate[1]: .004 kg carbon/kg carbon in bed/min, pilot plant can gasify about 1136 kg (2500 lbs) coal/hour

- Coal pretreatment: sized coal is preheated to 500°F for drying to less than 5% moisture. Natural gas is used as fuel for preheating at the pilot plant.

- Steam requirements to gasifier[1,2]: 1.1 kg/kg dry coal (lignite)
- Recycle gas to gasifier[1,2]: .4-.5 Nm^3/kg (7-8 scf/lb coal) (required to maintain steam partial pressure less than 1.3 MPa [13 atm]).

Utility Requirements

- Water: ?
- Electricity: ?
- Boiler feed water: ?

Process Efficiency

- Cold gas efficiency (2) = (product gas energy output/coal energy input x 1.00): 77% (dry lignite @ 6290 kcal/kg or 11.350 Btu/lb)
- Overall thermal efficiency: ? (Pilot plant used natural gas to dry and preheat lignite. Sensible heat was not recovered from either gasifier product gas or regenerator flue gas as would be the case in a commercial facility.)

Expected Turndown Ratio

Little actual data are available from pilot operations. Fluidized-bed operation and stringent pressure control requirements limit the turndown which can be accomplished without system failure.

Gas Production Rate[1,2]

1.35 Nm^3/kg (23 scf/lb) based on lignite or 3135 $Nm^3/hr/m^3$ (10840 $scf/hr/ft^2$) bed area

2.1.2 Regenerator

Equipment[1]

- Construction: Vertical, cylindrical pressure vessel with refractory lining and a ring type air distributor. An external cyclone is provided for the regenerator.
- Dimensions: ?
- Bed type and gas flow: Acceptor bed is fluidized by air and recycled flue gas. Char introduced into the lower section of the regenerator is burned and the resulting ash becomes entrained in the regenerator flue gas.
- Heat transfer and cooling: Heat of char combustion is utilized to reverse the acceptor reaction and raise the temperature of the acceptor for recycle to the gasifier. Heat transfer is via direct gas-solids contact.

- Ash removal: Ash leaves the regenerator with flue gas and is collected by an external cyclone and wet SO_2 scrubbing system.

- Acceptor removal: Regenerated acceptor is withdrawn near the top of the fluidized bed for return to the gasifier. Reject acceptor is withdrawn from the bottom of the regenerator.*

Operating Parameters[1]

- Bed temperature: $1280^{o}K$ ($1860^{o}F$)

- Pressure: 1 MPa (10 atm)

- Acceptor residence time: ?

Raw Material Requirements

- Air[1,2]: 2.35 kg air/kg lignite feed to gasifier

- Acceptor make-up[2]: 0.24 kg/kg coal to gasifier (based on Tymochetee dolomite from Ohio). Start-up requires burned limestone or dolomite to prevent agglomeration. After start-up, make-up limestone is added directly to the regenerator.

Flue Gas Production Rate

3.7 Nm^3/kg lignite (62 scf/lb). (In the pilot plant the flue gas is vented to the atmosphere after passing through a cyclone and SO_2 scrubbing system.)

Special Features - Partial Oxidation of Sulfur in the Regenerator

Calcium sulfide associated with carbonated acceptor and sulfur contained in char are partially oxidized to SO_2 (and other trace gaseous sulfur species - SO_3, COS, CS_2, S_2) in the regenerator. SO_2/SO_3 then partially react with CaO to form calcium sulfate and calcium sulfite.

*In early pilot plant runs, the reject acceptor was withdrawn from the gasifier. Withdrawal of the reject from the regenerator bottom is preferred for operational reasons(6).

In order to minimize the formation of deposits resulting from low melting $CaS/CaSO_3/CaSO_4$ mixtures, air to the regenerator is kept somewhat below stoichiometric. This results in conversion of $CaSO_4/CaSO_3$ to CaS by the reactions:

$$4CO + CaSO_4 = 4CO_2 + CaS$$

$$3CO + CaSO_3 = 3CO_2 + CaS$$

The net result is that sulfur leaves the regenerator mainly as CaS with reject acceptor or with cyclone ash. The remainder of the sulfur leaves as gaseous species (mainly SO_2) in the flue gas.

2.1.3 Ash Slurry Tank[5]: The major purpose of the ash slurry operation is to minimize the potential for oxidation and/or leaching of reduced sulfur after disposal of spent acceptor/ash. Ash from the flue gas cyclone and reject dolomite from the gasifier (or regenerator) are slurried with blowdown waters from product and flue gas quenching and from the SO_2 scrubber. The resulting slurry is transferred to an ash tank where CO_2 is added and H_2S is released:

$$CaS/CaO + CO_2 + H_2O = CaCO_3 + H_2S$$

At the pilot plant, the H_2S stream is sent to a flare; the ash/carbonated lime sludge, to a holding pond.

2.1.4 Coal Feed/Pretreatment[1,2]: Coal is crushed and screened to +100 - 8 mesh and dried at about 533°K (500°F) in a hot gas sweep mill to less than 5% moisture. Coal is fed to the gasifier via lockhoppers pressurized with inert gas. (In commercial applications, recycle product gas or flue gas from the regenerator will probably be used.)

2.1.5 Quench and Dust Removal:

- Product gas[5]: Gasifier has an internal cyclone and a venturi scrubber/quench tower system. Make-up water requirements for the product gas scrubbing system at the pilot plant are about 8 l/kg coal (1 gal/lb coal).

- Regenerator flue gas: Flue gas cleaning system consists of a cyclone, a quench tower, and SO_2 scrubber at the pilot plant.

2.2 Conceptual Commercial Scale Design - The U.S. Bureau of Mines has prepared two conceptual designs for 7 million Nm^3/day (250 million SCF/day) commercial plants using Montana sub-bituminous coal and North Dakota lignite[4]. The gasification and regeneration systems in these designs are essentially scaled-up versions of the pilot plant design. C.F. Braun (under ERDA contract) and CONSOL have also prepared conceptual designs of commercial CO_2 - Acceptor plants, but these designs are not publicly available at present.

3.0 Process Economics

- Based on the U.S. Bureau of Mines conceptual designs of 7 million Nm^3/day (250 million SCF/day) CO_2 - Acceptor plants[4], the following capital costs are estimated for the gasification/regeneration systems:

Feed Coal	Capital Cost (July 1975 dollars)	Percent of Overall Plant Cost
Sub-bituminous Coal	$149,000,000	28
Lignite	$118,000,000	26

- C.F. Braun and Company has also prepared economic estimates for a 7 million Nm^3/day (250 million scf/day) conceptual commercial scale CO_2 - Acceptor plant[9]. The gasification/regeneration system, including power recovery and raw gas quench, are estimated to cost $257,000,000 in 1976 dollars, or 29% of total plant investment.

4.0 Process Advantages

- Production of medium heating value gas without the use of oxygen.

- Raw product gas contains essentially no hydrocarbons other than methane. Tar/oil separation steps are not necessary in raw gas processing.

- Product gas has a H_2/CO ratio greater than three. All of the CO and part of the CO_2 can be methanated without prior water gas shift.

- Process results in nearly complete coal carbon utilization. Ash removed from the regenerator contains less than one percent of the carbon in the feed coal.

- Carbon dioxide and hydrogen sulfide are partially removed from product gas in the gasifier by reaction with the acceptor. This minimizes the requirement for removal of acid gases from the product gas.

- Compared to other processes which circulate solids for heat transfer, solids circulation rate is low since the acceptor provides both sensible and chemical heat for the endothermic coal gasification reactions.

5.0 Process Limitations

- Process is limited to noncaking coals (e.g., lignite and subbituminous coals.)

- Process is mechanically complicated, requiring careful pressure balance control to maintain simultaneous circulation of several solids streams.

- Acceptor make-up requirements amount to about 0.25 kg/kg of lignite. Unless reject acceptor can be reconstituted, the make-up requirement represents a large operational cost. (Natural deposits of suitable acceptors are generally not located near lignite deposits.)

- Regenerator offgas contains both sensible and chemical energy which is lost in pilot plant operation. In a commercial facility, this gas might be incinerated and expanded through a turbine to capture this energy. If not used, this energy represents a significant thermal penalty.

- Raw product gas contains fine char particulates which are not collected by the internal gasifier cyclone. This material amounts to about 4% of the input carbon and would represent a thermal penalty for a commercial plant unless the char is salvaged from the quench system and returned to the regenerator.

6.0 Input Streams (see Figure A-11)

6.1 Coal (Stream 1) - see Table A-37

6.2 Acceptor (Stream 3) - see Table A-38

6.3 Stream (Stream 8) - see Section 2.1.1

6.4 Air (Stream 9) - see Section 2.1.2

6.5 CO_2 (Stream 10) - no data available (intermittent operation)

7.0 Intermediate/Discharge Streams

7.1 Gaseous Stream (see Figure A-11)

7.1.1 Product gas (Stream 4) - see Table A-39

7.1.2 Regenerator flue gas (Stream 13) - see Table A-40

7.1.3 Ash slurry tank offgas (Stream 19) - no data available

7.1.4 Drier/preheater flue gas (Stream 22) - no data available

7.1.5 Organic waste tank depressurization offgas (Stream 23) - no data available

7.1.6 SO_2 scrubber offgas (Stream 24) - no data available

7.2 Liquid Streams (see Figure A-19)

7.2.1 Preheater venturi scrubber water (Stream 21) - see Table A-41

7.2.2 Product gas quench water blowdown (Stream 14) - see Table A-42

7.2.3 Flue gas quench water blowdown (Stream 17) - see Table A-43 and A-37

7.2.4 SO_2 scrubber water blowdown (Stream 18) - see Table A-45

7.2.5 Ash slurry tank effluent (Stream 20) - see Table A-46

7.2.6 Holding pond effluent (Stream 25) - see Table A-47

7.3 Solids Streams (see Figure A-19)

7.3.1 Gasifier char blowdown (Stream 5) - see Table A-48

7.3.2 Product gas quench solids (Stream 26) - see Table A-49

7.3.3 Reject acceptor (Stream 11) - see Table A-50

7.3.4 Ash from flue gas cyclone (Stream 15) - see Table A-51

7.3.5 Pond solids (Stream 16) - see Table A-52

TABLE A-37. CO_2-ACCEPTOR PILOT PLANT INPUT COALS (STREAM NO. 1)*

Run No. (Reference)	21[1]	26[2]	27c[5]	28b[5]	33b[5]	39[8]
Coal Type†	Velva Lignite	Velva Lignite	Velva Lignite	Velva Lignite	Velva Lignite	Glenharold Lignite
Dry HHV- kcal/kg (Btu/lb)	5975 (11190)	6066 (11360)	--	--	--	--
Size (mesh)	+100 - 8	+100 - 8	--	--	--	--
Feed Rate kg/hr (lbs/hr)	1136 (2500)	1134 (2450)	--	--	--	--
Composition %						
Moisture (as received)	40	40	--	--	--	--
Carbon	66.2	66.2	--	--	--	--
Hydrogen	4.5	4.6	--	--	--	--
Oxygen	21.6	20.7	--	--	--	--
Sulfur	0.7	0.54	--	--	--	--
Nitrogen	0.8	1.0	--	--	--	--
Ash	6.2	6.8	--	--	--	--
Trace Elements (ppm)						
Sb			--	--	--	--
As			5	2		
Be			--	40		
Cd			--	1		
Cr			--	30		
Pb			<10	10		
Hg			0.11	--		
Ni			--	10		
Se			<0.4	<0.4		
Te			1.4	<0.1		
V			--	<50		

*The runs listed in this table are those which had steady state periods and/or for which specific stream composition data are available.

†Velva lignite is a low sodium coal; Glenharold lignite is a high sodium coal.

TABLE A-38. CO_2-ACCEPTOR PILOT PLANT ACCEPTOR (STREAM NO. 3)

Run No. (Reference)	21[1]	26[2]	27c[5]	28b[5]	33b[5]
Makeup Feed Rate, kg/kg coal	0.24	0.24	--	--	--
Composition (%)					
MgO	19.8	22.4	--	--	--
CaO	29.5	27.0	--	--	--
CO_2	44.8	45.7	--	--	--
Inert	5.8	4.9	--	--	--
Trace Elements (ppm)					
Sb	--	--	--	--	1.6
As	--	--	3	6	1.6
Be	--	--	<10	--	<5
Cd	--	--	2	--	4.0
Cr	--	--	15	--	10
Pb	--	--	25	34	<0.5
Hg	--	--	--	0.08	<0.05
Ni	--	--	16	--	30
Se	--	--	< 0.4	0.4	0.3
Te	--	--	< 0.1	1.4	0.2
V	--	--	<50	--	55

TABLE A-39. CO_2-ACCEPTOR PILOT PLANT PRODUCT GAS (STREAM NO. 4)

Run No. (Reference)	21(1)	26(2)	33b(7)
Production Rate, Nm^3/kg coal (SCF/lb)	1.34 (22.7)	1.29 (21.8)	--
Temperature After Quench (°C)	--	--	--
HHV kcal/Nm^3 (Btu/SCF)	3160 (375)†	3200 (380)†	--
Composition (Vol. %, dry)			
CO	15.45	15.47	--
H_2	55.98	58.8	--
CH_4	14.14	13.75	--
CO_2	10.88	9.08	--
N_2 + Ar	3.0	2.91	--
O_2	--	--	--
H_2S	0.132	0.12	0.04 -0.09
COS	--	--	0.0015-0.004
CS_2	--	--	--
RSH	--	--	--
C_2+	0.01	0.01	--
NH_3	0.427*	0.69*	--
HCN	--	--	--
Particulate Matter (mg/Nm^3)	--	--	--
H_2O	34.0*	31*	--

*Composition before quench, other data represent quenched gas.

†Calculated from composition data.

TABLE A-40. CO_2-ACCEPTOR REGENERATOR FLUE GAS (STREAM NO. 13)

Run No. (Reference)	21[1]	26[2]	33b[5]
Flow Rate, Nm^3/kg coal (SCF/lb)	3.7 (62)	--	--
Composition*	--	--	--
CO	1.98 Vol.%	2.2 Vol.%	--
CO_2	28.32 Vol.%	29.35 Vol.%	--
H_2	0.04 Vol.%	0.06 Vol.%	--
N_2 + Ar	68.66 Vol.%	68.40 Vol.%	--
H_2O	0.98 Vol.%	1.3 Vol.%	--
SO_2	121 ppmv	92 ppmv	--
S_2	3 ppmv	--	--
H_2S	28 ppmv	39 ppmv	55-320 ppmv
COS	46 ppmv	46 ppmv	95-150 ppmv
NH_3	--	--	--
Particulates (mg/Nm^3)	--	--	--

*After SO_2 scrubber

TABLE A-41. CO_2-ACCEPTOR PREHEATER VENTURI SCRUBBER WATER (STREAM NO. 21)

Run No. (Reference)	27c(5)	28b(5)	33b(5)
Flow Rate, l/kg coal (gal/lb)	8 (1)	8 (1)	8 (1)
Composition*			
COD	30	10	272
TDS	590	588	950
TSS	--	5110	2684
NH_3	1.8	3.01	162
$S^=$	0.23	294	1.96
$SO_3^=$	0.68	0.4	4.1
$SO_4^=$	310	300	38
Cyanides	<.02	<.02	<.02
Phenols	<.004	0.027	<.001
Total Alkalinity†	48	--	714
Total Hardness†	329	350	290
NO_3^-	0.1	.03	0.53
Total $PO_4^{\equiv}$	7.9	4.5	2.9
Cl^-	8.3	7	2
Ca^{++}	83	83	55
Mg^{++}	29	36	37
Na^+	14	18	85
K^+	14	6	94
$Fe^{(+2\ \&\ +3)}$	0.27	.03	0.2
Mn^{++}	0.13	.03	<.05
pH	7.0	6.8	8.0

(continued)

TABLE A-41. Continued

Run No. (Reference)	27c(5)	28b(5)	33b(5)
Trace Elements in Filtered Water			
Sb	0.4	0.5	0.001
As	0.009	<0.01	0.015
Be	<0.005	<0.01	<0.02
Cd	<0.005	<0.01	<0.02
Cr	0.1	0.1	0.1
Pb	<0.01	<0.05	<0.05
Hg	--	--	0.001
Ni	<0.1	0.1	<0.01
Se	<0.005	<0.005	0.003
Te	<0.002	<0.005	0.001
V	<2	<2	<1
Trace Elements in Scrubber Water*			
Sb	1	0.8	2
As	8	3	4
Be	--	<10	<10
Cd	1.8	<1	<2
Cr	10	10	10
Pb	<10	<10	2
Hg	0.4	0.3	13
Ni	15	10	5
Se	1	0.8	2
Te	0.2	<.1	<.1

*mg/l except pH

†as $CaCO_3$

TABLE A-42. CO_2-ACCEPTOR PRODUCT GAS QUENCH WATER BLOWDOWN (STREAM NO. 14)

Run No. (Reference)	27c(5)	28b(5)	33b(5)	39 (8)
Flow Rate, l/kg coal (gal/lb)	8 (1)	8 (1)	8 (1)	
Composition*				
COD	120	100	300	--
TDS	1210	608	426	--
TSS†	4825	1290	2000	--
NH_3	1180	1505	1250	1330
$S^=$	0.01	1.19	84	60
$SO_3^=$	33.3	10.7	12.7	350
$SO_4^=$	58	56	335	77
Cyanides	0.02	0.02	--	1.6
Phenols	0.004	0.05	0.001	0.003
Total Alkalinity‡	5520	186	5540	--
Total Hardness‡	1998	400	240	--
NO_3^-	0.03	0.07	--	--
Total $PO_4^{\equiv}$	11.4	3.1	3.8	11
Cl^-	56	70	42	31
Ca^{++}	30	19	39	--
Mg^{++}	478	93	35	--
Na^+	18	15	15	--
K^+	17	18	9	--
$Fe^{(+2\ \&\ +3)}$	0.18	0.01	0.03	--
Mn^{++}	0.13	0.03	0.05	--
SCN^-	--	--	--	--
pH	8.2	8.7	7.7	5.6

*mg/l except pH

†see Table A-42 for composition of solids

‡as $CaCO_3$

TABLE A-43. CO_2-ACCEPTOR FLUE GAS QUENCH WATER BLOWDOWN (STREAM NO. 17)

Run No. (Reference)	27c[5]	28b[5]	33b[5]
Flow Rate, l/kg coal (gal/lb)	6 (.75)	6 (.75)	6 (.75)
Composition*			
COD	30	5	70
TDS	1300	912	1098
TSS	150	119	1630
NH_3	37.9	33	292
$S^=$	<0.01	0.04	3.24
$SO_3=$	5.4	6.65	43.8
$SO_4=$	585	282	685
Cyanides	<0.02	<0.02	0.02
Phenols	<0.004	<0.004	--
Total Alkalinity†	154	--	1502
Total Hardness†	592	453	636
NO_3^-	0.05	0.01	6.2
Total $PO_4^{\equiv}$	12.1	4.2	1.2
Cl^-	48	63	1.5
Ca^{++}	141	140	134
Mg^{++}	58	26	73
Na^+	95	95	57
K^+	90	6	0.7
$Fe^{(+2\ \&\ +3)}$	0.12	0.01	0.03
Mn^{++}	0.25	0.05	<0.05
pH	6.6	8.0	7.2

*mg/l except pH

†as $CaCO_3$

TABLE A-44. SOLIDS IN CO_2-ACCEPTOR FLUE GAS QUENCH WATER BLOWDOWN (STREAM NO. 17)

Run No. (Reference)	27c(5)	28b(5)	33b(5)
Flow Rate, kg/kg coal	0.0009*	0.0007*	0.00978*
Composition (wt %)			
H	--	--	--
C	--	--	--
N	--	--	--
O	--	--	--
S	--	--	--
Ash	--	--	--
CaS·CaO	--	--	--
CO_2	--	--	--
Trace Elements (ppm)			
Sb	0.4	5.3	2
As	--	176	23
Be	--	10	10
Cd	--	70	2
Cr	140	160	70
Pb	--	500	19
Hg	--	--	0.06
Ni	50	50	65
Se	0.4	5.3	2
Te	--	1.4	0.7
V	--	102	26

*Calculated from TSS and flow rate in Table A-36.

TABLE A-45. CO_2-ACCEPTOR SO_2 SCRUBBER WATER BLOWDOWN (STREAM NO. 18)

Run No. (Reference)	27c[5]	28b[5]	33b[5]
Flow Rate, l/kg coal (gal/lb)	0.4 (.05)	0.4 (.05)	0.4 (.05)
Composition*			
COD	120	--	55
TDS	5678	77292	6704
TSS	26	--	49
NH_3	10	11.5	95.8
$S^=$	10.8	2.17	3.96
$SO_3^=$	57.9	99.2	125
$SO_4^=$	395	172	246
Cyanides	0.02	--	0.02
Phenols	0.004	--	0.004
Total Alkalinity†	284	34800	--
Total Hardness†	555	3400	248
NO_3	0.6	0.67	0.02
Total $PO_4^{\equiv}$	9.3	11.3	0.8
Cl^-	95	48	3.0
Ca^{++}	47	642	190
Mg^{++}	107	437	61
Na^+	45	35	23
K^+	45	32800	50
$Fe^{(+2\ \&\ +3)}$	0.16	0.13	190
Mn^{++}	0.30	0.05	0.1
pH	7.4	7.9	7.9

*mg/l except pH

†as $CaCO_3$

TABLE A-46. CO_2-ACCEPTOR ASH SLURRY TANK EFFLUENT (STREAM NO. 20)

Run No. (Reference)	27c[5]	28b[5]
Flow Rate	Intermittent Operation	Intermittent Operation
Composition*		
COD	290	135
TDS	6244	2772
TSS	67980	4478
NH_3	18	200
$S^=$	230	18.4
$SO_3^=$	102.5	8.56
$SO_4^=$	195	60
Cyanides	<.02	<.02
Phenols	<.004	<.004
Total Alkalinity†	4630	--
Total Hardness†	6440	2228
NO_3^-	0.0	0.3
Total $PO_4^{\equiv}$	3.7	0.8
Cl^-	235	400
Ca^{++}	1323	922
Mg^{++}	763	0
Na^+	425	205
K^+	495	115
$Fe^{(+2\ \&\ +3)}$	1.3	0.0
Mn^{++}	<.05	0.02
pH	12.2	12.3

*mg/l except pH

†as $CaCO_3$

TABLE A-47. CO_2-ACCEPTOR HOLDING POND WATER AND OUTFLOW (STREAM NO. 25)

Run No. (Reference)	27c(5)	28b(5)	33b(5)
Pond Outflow* l/kg coal (gal/lb)	24-35(3-4)	2-30(3-4)	8-21(1-3)
Parameters			
TSS (mg/l)	20-90	5-200	70-375
BOD (mg/l as O_2)	2.5-3.5	8-33	5-24
Pond Water*			
Composition‡			
COD	15	15	35
TDS	1038	2988	1002
TSS	257	1120	--
NH_3	242	277	296
$S^=$	<0.01	0.48	<0.03
$SO_3^=$	<0.01	4.13	<0.01
$SO_4^=$	315	238	380
Cyanides	<0.02	<0.02	<0.02
Phenols	<0.004	0.017	<0.001
Total Alkalinity†	900	182	1030
Total Hardness†	1036	129	259
NO_3^-	7.0	0.03	--
Total $PO_4^{\equiv}$	12.5	3.3	4.6
Cl^-	17	208	2.5
Ca^{++}	83	32	60
Mg^{++}	201	12	26
Na^+	95	130	89
K^+	100	36	108
Fe(+2 & +3)	0.10	0.01	0.09
Mn^{++}	0.13	<0.02	<0.05
pH	7.8	8.9	7.9

*The exact location of these samples is unknown.

†as $CaCO_3$

‡mg/l except pH

TABLE A-48. CO_2-ACCEPTOR GASIFIER CHAR BLOWDOWN (STREAM NO. 5)

Run No. (Reference)	26[2]	27c[5]	28b[5]	33b[5]
Flow Rate, kg/kg coal	0.03	--	--	--
Composition (wt %)				
H	0.83	--	--	--
C	73.29	--	--	--
N	0.36	--	--	--
O	0.00	--	--	--
S	0.00	--	--	--
Ash	18.70	--	--	--
CaS·CaO	0.07	--	--	--
CO_2	6.75	--	--	--
Trace Elements (ppm)				
Sb	--	--	--	0.2
As	--	21	3	19
Be	--	--	<10	5
Cd	--	--	1	12
Cr	--	--	40	30
Pb	--	25	20	13
Hg	--	0.05	--	0.62
Ni	--	--	28	20
Se	--	0.4	0.4	4
Te	--	1.4	<.1	0.1
V	--	--	<50	7

TABLE A-49. SOLIDS IN CO_2-ACCEPTOR PRODUCT GAS QUENCH WATER (STREAM NO. 26)

Run No. (Reference)	21[1]	26[2]	27c[5]	28b[5]	33b[5]
Flow Rate kg/kg coal	0.024	0.0457	0.039*	0.010*	0.016*
Composition (wt %)					
H	0.39	0.78	--	--	--
C	68.0	59.1	--	--	--
N	0.24	0.22	--	--	--
O	0.86	0.00	--	--	--
S	0.66	0.00	--	--	--
Ash	29.85	33.05	--	--	--
CaS·CaO	--	0.49	--	--	--
CO_2	--	6.36	--	--	--
Trace Elements (ppm)					
Sb	--	--	0.4	--	4
As	--	--	20	--	19
Be	--	--	--	--	<5
Cd	--	--	4.0	--	12
Cr	--	--	20	--	30
Pb	--	--	40	--	14
Hg	--	--	0.09	--	0.62
Ni	--	--	45	--	20
Se	--	--	0.4	--	4
Te	--	--	<0.1	--	<0.1
V	--	--	--	--	7

*Calculated from TSS and flow in Table A-35.

TABLE A-50. CO_2-ACCEPTOR REJECT ACCEPTOR (STREAM NO. 11)*

Run No. (Reference)	21(1)	26(2)	27c(5)
Flow Rate, kg/kg coal	0.15	0.13	--
Composition (wt %)			
MgO	{67}	36.02	--
CaO		43.42	--
Inert	17	7.93	--
CO_2	16	12.61	--
CaS·CaO	0.14	0.03	--
Trace Elements (ppm)			
Sb	--	--	0.2
As	--	--	18
Be	--	--	--
Cd	--	--	1.8
Cr	--	--	40
Pb	--	--	14
Hg	--	--	0.1
Ni	--	--	55
Se	--	--	0.2
Te	--	--	<0.1
V	--	--	--

*Withdrawn from gasifier in these runs.

TABLE A-51. ASH FROM CO_2-ACCEPTOR FLUE GAS CYCLONE (STREAM NO. 15)

Run No. (Reference)	21[1]	26[2]	27c[5]	28b[5]	33b[5]
Flow Rate kg/kg coal	0.058	0.058	--	--	--
Composition (wt %)					
H	--	0.00	--	--	--
C	7.55	7.38	--	--	--
N	--	0.00	--	--	--
S	5.14	0.00	--	--	--
Ash (Oxides)	88.3	90.79	--	--	--
CaS·CaO	--	1.83	--	--	--
Trace Elements (ppm)					
Sb	--	--	--	--	0.1
As	--	--	--	6	12
Be	--	--	--	<10	<5
Cd	--	--	--	3	5.3
Cr	--	--	--	50	74
Pb	--	--	56	33	<0.5
Hg	--	--	0.04	--	<0.05
Ni	--	--	--	59	69
Se	--	--	0.6	3	3.1
Te	--	--	1.4	<0.1	<0.2
V	--	--	--	<50	71

TABLE A-52. CO_2-ACCEPTOR PROCESS WATER HOLDING POND SOLIDS (STREAM NO. 16)

Run No. (Reference)	Pilot Plant Run 28b[5]
Trace Elements	ppm
Sb	--
As	5
Be	<10
Cd	2
Cr	60
Pb	70
Hg	--
Ni	<0.4
Se	<0.1
Te	<50
V	--

8.0 Data Gaps and Limitations - Data gaps and limitations for the CO_2 - Acceptor process relate primarily to the properties of specific intermediate and discharge streams.

- Raw product gas: Levels of H_2S, COS, NH_3, and HCN are not known.
- Raw regenerator flue gas: Levels of sulfur and nitrogen species are not known.
- Ash tank offgas: Composition of this stream is unknown. The commercial counterpart of this stream would be processed for sulfur recovery. Composition data (especially H_2S and CO_2) from the pilot plant batch operation could provide some useful information for downstream system design.
- Quench and scrubber blowdowns: Constituents not reported for these streams include total organic carbon, thiocyanate, and fixed cyanides. Flow data for these streams is either lacking or semiquantitative.

- Reject acceptor and ash: The forms and quantities of sulfur in these waste solids are not completely known.

- Pond effluent: Available data for pond water and pond effluent are not entirely consistent (Table A-47).

- At present, data relating to recent pilot plant runs with sub-bituminous coal(s) are unavailable.

Although, as presented above, some data are available on the characteristics of a number of input and discharge streams, the available data are comprehensive in that not all streams are addressed and not all potential pollutants and toxicological and ecological properties are identified. The type of data needed correspond to that which are obtained using the EPA's phased level approach to multimedia environmental sampling and analysis[11].

9.0 Related Programs

- Radian Corporation, under contract to CONSOL, prepared a test plan for sampling at the pilot plant and conducted sampling/testing during run No. 39 (September 27 through October 2, 1976). The test results are not currently available to the public.

- The Environmental Studies Institute of the Carnegie-Mellon University (CMU) has been the environmental program coordinator for the CO_2-Acceptor sampling and analysis efforts which have been conducted. Data for pilot plant runs with Glenharold lignite are expected to be published by CMU in the near future.

REFERENCES

1. Fink, C., G. Curran, et al, CO_2-Acceptor Process Pilot Plant - 1974, presented at the 6th Synthetic Pipeline Gas Symposium, Chicago, Illinois, October 28, 1974.

2. Fink, C., G. Curran, et al, CO_2-Acceptor Process, Symposium Proceedings: Environmental Aspects of Fuel Conversion Technology, II, EPA-600/2-76-149, June 1976.

3. Dravo Corp., Handbook of Gasifiers and Gas Treatment Systems, ERDA FE-1772-11, February 1976.

4. Preliminary Economic Analysis of CO_2-Acceptor Process Producing 250 Million Standard Cubic Feet Per Day of High-BTU Gas from Two Fuels: Sub-Bituminous Coal and Lignite, U.S. Bureau of Mines, Morgantown, W. Va., March 1976.

5. Massey, M. J., R. W. Dunlap, et al, Characterization of Effluents from the Hygas and CO_2-Acceptor Pilot Plants - Interim Report July-September 1976, Carnegie-Mellon University under ERDA Contract E(49-18)-2496, November 1976.

6. McCoy, D.C., CO_2-Acceptor Process Pilot Plant, 1976, 8th Synthetic Pipeline Gas Symposium, Chicago, Illinois, October 18-20, 1976.

7. Dunlop, R. W., and Massey, M. J., Gas-Phase Environmental Data from Second Generation Coal Gasification Processes, Interim Report No. 1, ERDA Document No. FE-2496-2, February 1977.

8. Massey, M. L., et al, Environmental Assessment in the ERDA Coal Gasification Development Program - Progress Report for the Period July 1976-December 1976, Environmental Studies Institute of Carnegie-Mellon University, Pittsburgh, Pennsylvania, March 1977.

9. Detman, R., Preliminary Economic Comparison of Six Processes for Pipeline Gas from Coal, 8th Synthetic Pipeline Gas Symposium, Chicago, Illinois, October 18-20, 1976.

10. 1975-1976 Fossil Energy Program Report, Vol. II - Coal Gasification, ERDA Document No. 76-10.

11. Dorsey, J.A., and Johnson, L.D., Environmental Assessment Sampling and Analysis: Phased Approach and Techniques for Level 1, EPA-600/2-77-115, June 1977.

SYNTHANE PROCESS

1.0 General Information[1,2]

1.1 Operating Principles - High pressure coal gasification in a fluidized bed by injection of steam and oxygen with counter-current gas/solids flow.

1.2 Development Status[12] - A 65 tonnes/day (72 tons/day), 6.8 MPa (1000 psia) pilot plant has been constructed at Bruceton, Pennsylvania by Lummus Co. for ERDA. The plant operated from July to December 1976 in the free fall injection mode.* Several problems with this mode of operation led to a modification of the gasifier to allow deep bed injection of feed coal. The plant has operated in the latter mode since February 1977, with fewer operating problems. Tests with agglomerating coals are planned and downstream systems are to be brought on line during the latter part of 1978.

1.3 Licensor/Developer - U.S. Department of Energy (DOE), Pittsburgh Energy Research Center, 4800 Forbes Avenue, Pittsburgh, Pa. 15213.

1.4 Commercial Applications - None.

2.0 Process Information

2.1 Bench Scale/Process Development Unit (see Figure A-13[4,5])

2.1.1 Gasifier

Equipment

- Construction: vertical, cylindrical stainless steel pipe
- Dimensions: a 183 cm (6 ft) high, 10 cm (4 in.) I.D. pipe inside a 25 cm (10 in.) I.D. pipe

*The process as originally designed involved the injection of coal above the fluidized bed level to allow rapid heating and devolatilization during "free-fall". Tar plugging of internal cyclone and overloading quench systems led to redesign of coal injection system. Coal is now injected into the fluidized bed; this technique has minimized tar generation and associated problems.

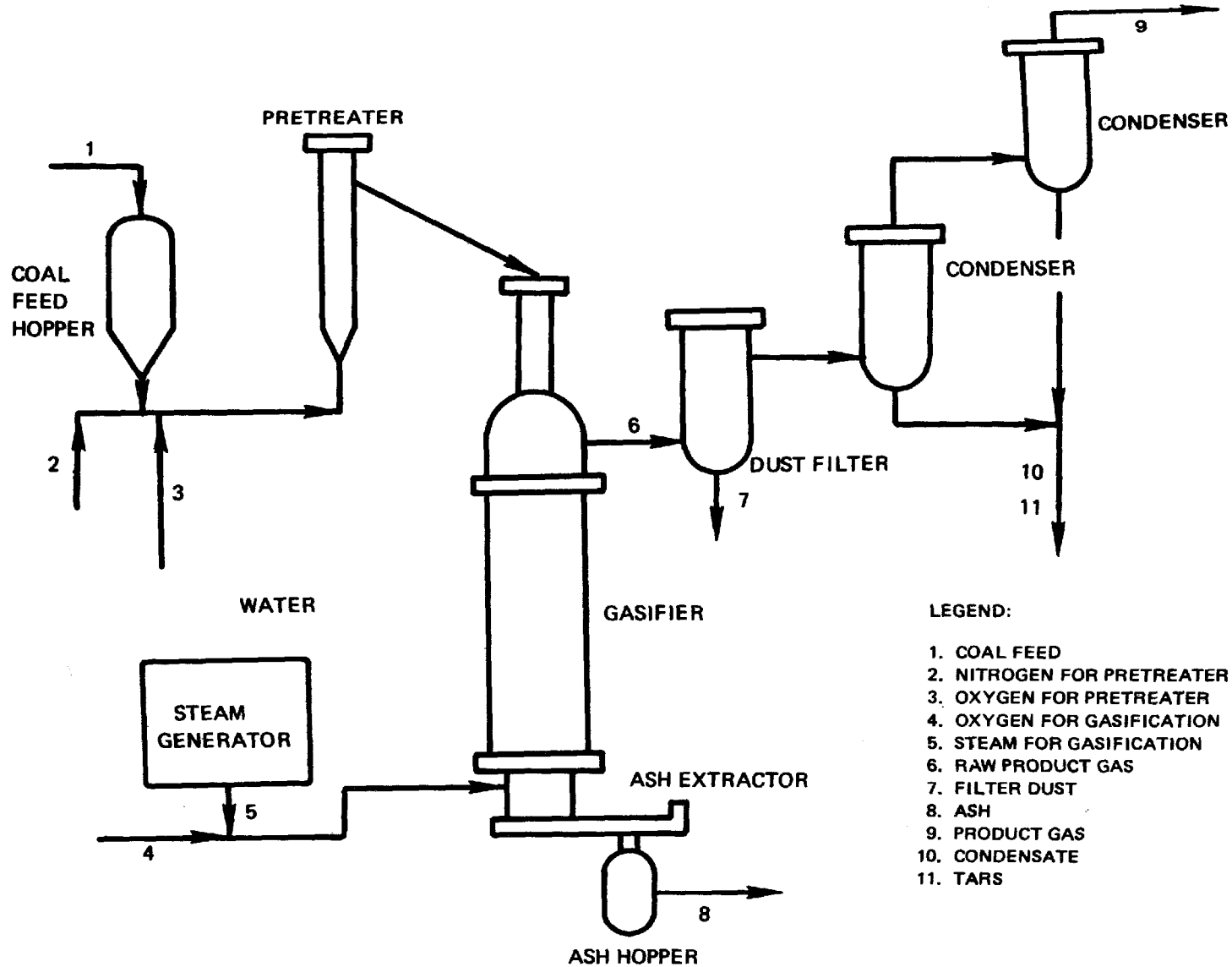

Figure A-13. Bench Scale/Process Development Unit Synthane Gasifier[3]

- Bed type and gas flow: fluidized bed with continuous counter-current gas flow, horizontal gas outlet

- Heat transfer and cooling: direct gas/solid heat transfer: electric heaters and refractories are contained in the annulus between the two pipe sections

- Coal feeding: feeding is by overflow from the fluid bed pretreater. The pretreater is fed from a feed hopper by injection of oxygen and nitrogen.

- Gasification media introduction: continuous flow of steam plus oxygen at the bottom of the bed

- Ash removal: an ash "extractor" is used to remove and transfer ash to a hopper

Operating Parameters

- Gas outlet temperature: ?

- Coal bed temperature: Max 1258°K (1800°F)

- Gasifier presssure: 4.0 MPa (600 psia)

- Coal residence time in gasifier: 18 sec*

Raw Material Requirements

- Coal feedstock:

  Type - all types, caking coals partially oxidized in attached pretreater

  Size - minus 20 mesh

  Rate - 44 kg/hr (20 lbs/hr)

- Coal pretreatment: attached fluid bed pretreater

- Steam: 1.54 - 1.68 kg/kg coal

- Oxygen: 0.30 - 0.37 kg/kg coal

- Other materials: None

---

*Calculated based on data in Reference 5.

Utility Requirements

- Water: ?
- Electricity: ?

Process Efficiency

- Cold gas efficiency: ?
- Overall thermal efficiency: ?
- Carbon conversion: 71% - 72%

Expected Turndown Ratio - ?

Gas Production Rate/Yield - 0.69 - 0.73 Nm^3/kg (11.7 - 12.3 12.3 scf/lb)

2.1.2 Coal Feed/Pretreatment - Dry pulverized (-20 mesh) feed coal is transported from a feed hopper by injection of oxygen and nitrogen and carried to the pretreater. The pretreater operates at gasifier pressure and 636°K (690°F) to partially oxidize the feed and destroys its caking properties. The feed coal overflows the pretreater to the gasifier.

2.1.3 Quench and Dust Removal - Dust removal is by a filter with condensibles removed in a two-stage condenser.

2.2 Pilot Plant (Figure A-14)[1,2,7]

2.2.1 Gasifier (Figures A-14 and A-15)

Equipment

- Construction: vertical, cylindrical steel vessel
- Dimensions: 31 m (101 ft. 9 in.) high, 0.15 m (5 ft) I.D.
- Bed type and gas flow: fluidized bed with continuous counter-current gas flow, horizontal gas outlet from internal cyclone near top of vessel
- Gasification media introduction: continuous flowing of steam plus oxygen at the bottom through multiple orifices in a cone shaped distributor

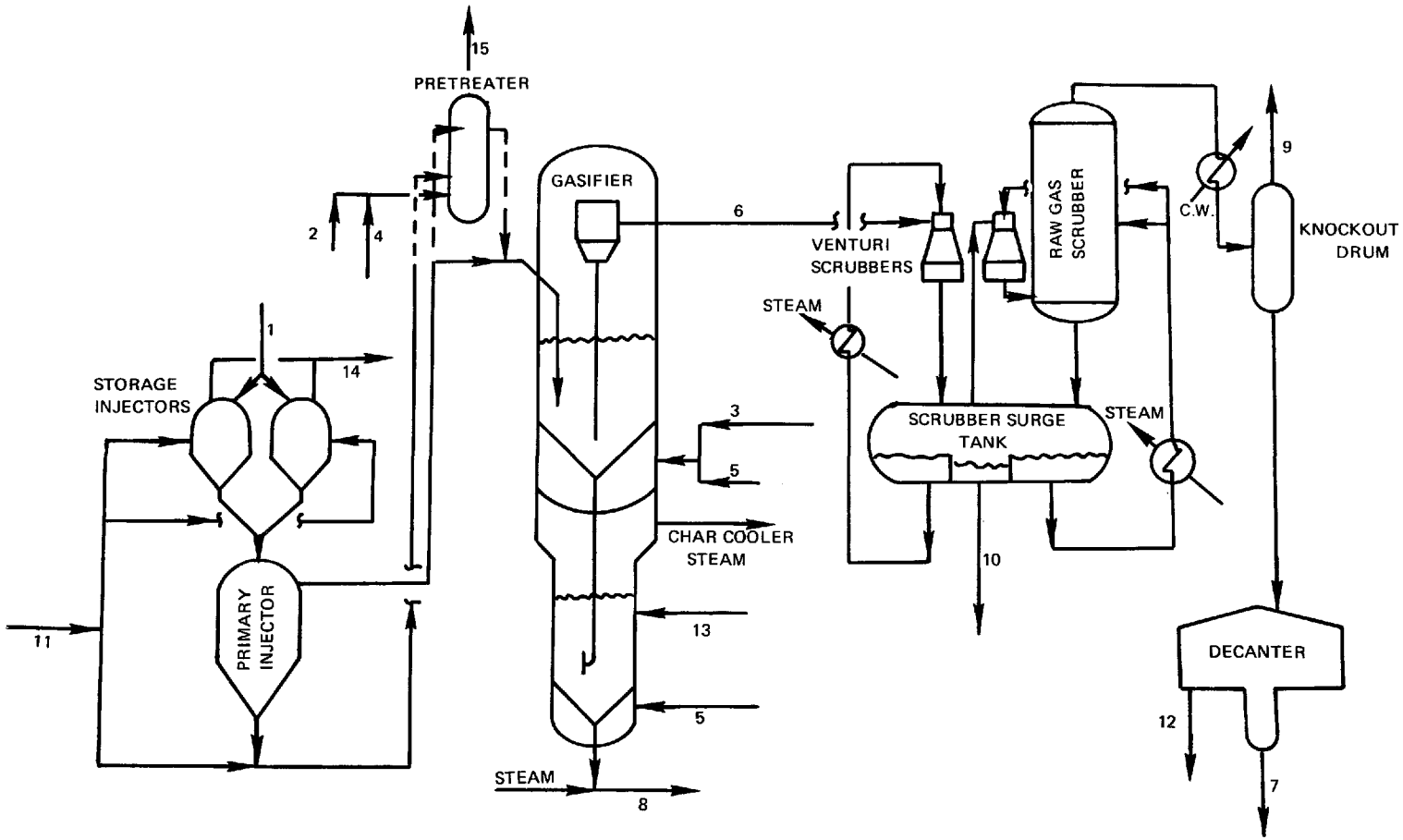

LEGEND:

1. FEED COAL
2. OXYGEN TO PRETREATER
3. OXYGEN TO GASIFIER
4. STEAM TO PRETREATER
5. STEAM TO GASIFIER
6. RAW PRODUCT GAS
7. TARS
8. CHAR
9. QUENCHED PRODUCT GAS
10. CONDENSATE BLOWDOWN
11. LOCKHOPPER PRESSURIZATION GAS
12. DECANTER WASTEWATER
13. MAKEUP WATER
14. LOCKHOPPER VENT GAS
15. PRETREATER OFFGAS

Figure A-14. Synthane Pilot Plant Flow Diagram[11,12]

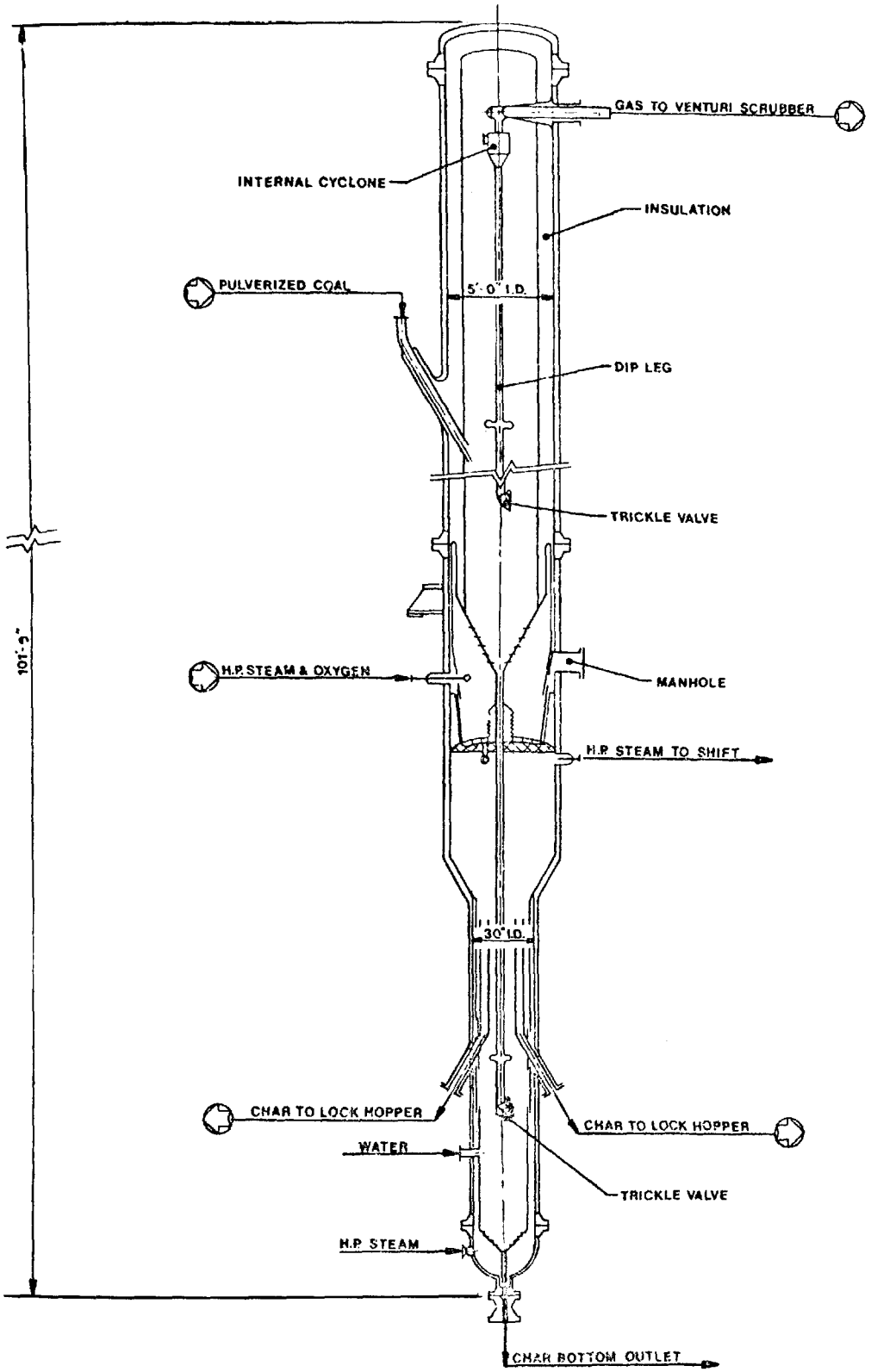

Figure A-15. Synthane Pilot Plant Gasifier(2)

- Char removal mechanism: char is discharged into char lock hoppers and transported in a low pressure steam stream

- Special features:

  - Internal cyclone removes particles larger than 50 μm

  - High pressure steam produced in char cooler section or gasifier

Operating Parameters[11,12]

	Run 1-T	Run 1-DB
• Gas outlet temp.	593°K (608°F)	840°K-880°K (1050°F-1126°F)
• Coal bed temp.	1000°K (1440°F)	950°K-1090°K (1280°F-1500°F)
• Gasifier press.	4.2 MPa (615 psia)	4.2 MPa (615 psia)

Raw Material Requirements

- Coal feedstock:

  Type - all types, caking coals partially oxidized by attached pretreater

  Size - minus 20 mesh

  Rate -

Run 1-T	Run 1-DB
2.3 tonnes/hr (2.5 tons/hr)	1.8-2.6 tonnes/hr (2.0-2-8 tons/hr)

	Run 1-T	Run 1-DB
• Steam (kg/kg coal):	1.12	0.99 - 1.75
• Oxygen (kg/kg coal):	2.32	3.25 - 3.85

Utility Requirements

- Water: Boiler - ?

  Quench - ?

  Cooling - ?

  Electricity - ?

Process Efficiency

- Cold gas efficiency: ?
- Overall thermal efficiency: ?
- Carbon conversion efficiency: Run 1-T 57; Run 1-DB 43-62

Expected Turndown Ratio: ?

Gas Production Rate/Yield	Run 1-T	Run 1-DB
	1.18 Nm^3/kg (20 scf/lb)	1.36-1.48 Nm^3/kg (23-25 scf/lb)

2.2.2 Coal Feed/Pretreatment (see Figure A-14) - Dry pulverized (-20 mesh) feed coal is transported to the pressurized feed hopper through a system of cyclones, bin and lock-hoppers. The coal is then entrained by high pressure steam and a small amount of oxygen and fed to the pre-treater. The pretreater is a separate fluid bed (maintained at 6.8 MPa and 973°K) in which the caking properties of the feed coal are nullified. The coal from the pre-treater overflows into the gasifier. Noncaking coals by-pass the pretreater.

2.2.3 Quench and Dust Removal (see Figure A-14) - After removal of large (greater than 50 μm) particles in the gasifier's internal cyclone, product gas exits the gasifier and passes through a water spray venturi scrubber. The gas condensates and particulate matter such as carbon fines enter a scrubber surge tank where the gas and liquid phases are separated. The gas stream then passes to a scrubbing tower for further cleanup. The scrubbing tower contains both water and oil wash sections. The condensates and carbon fines from the venturi scrubber and scrubbing tower collected in the scrubber surge tank are pressurized and sent to a decanter.

2.2.4 Miscellaneous Operations - Systems for the recovery of heat and recirculation of wash water (and oil) are provided. Various compressors, pumps and heat exchangers are employed.

3.0 Process Economics[3,9] - Capital investment requirements and costs for the produced SNG have been estimated by the Bureau of Mines[3] and C.F. Braun[9] (for ERDA-AGA). The Braun data is considered the most reliable and will be the basis for the discussion. Total capital requirements for 250 MMSCFD facility are estimated to be 1.5 billion dollars. Of the total, 11.3% is accountable to coal feed, gasification and quench. The cost of the produced gas is estimated to be $4.69/MM Btu average by the utility financing method.

4.0 Process Advantages

- Caking coals can be used
- A high H_2/CO ratio is obtained, minimizing or eliminating shift requirements
- A high percentage of methane is produced in the gasifier, reducing methanation requirements
- The process flow system and equipment are relatively simple
- Gas is produced at high pressure
- Deep bed injection mode of operation minimizes tar formation, thus simplifying downstream processing systems

5.0 Process Limitations

- Limited experience with high pressure vessels; process has not operated at pipeline pressure to date
- Tar condensation during start-up may cause plugging of the internal cyclone drip leg in the pilot plant gasifier
- Process has not been demonstrated with caking coals to date

6.0 Input Streams

6.1 Coal (Stream No. 1) - (see Table A-53)

TABLE A-53. FEED COAL (STREAM NO. 1) COMPOSITIONS FOR SYNTHANE BENCH SCALE UNIT AND PILOT PLANT

	Bench Scale Unit[5]	Pilot Plant[7]	
		Run 1-T	Run 1-DB-B/4
Coal Type/Origin	Bituminous/ Illinois No. 6	Subbituminous/ Rosebud	Subbituminous/ Rosebud
Proximate and Ultimate Analysis (%)			
Moisture	3.7	5.2	6.9
Volatile Matter	38.1	33.9	34.7
C	65.0	62.8	66.4
H	4.9	4.6	4.4
N	1.2	0.9	1.0
S	3.6	0.5	0.9
O	11.6	19.6	15.9
Ash	13.7	11.6	11.4
Trace Elements (ppm)			
Hg	0.1	--	--
U	1.4	--	--
As	0.87	--	--
Zn	25	--	--
Mn	160	--	--
Cr	170	--	--
V	100	--	--
F	490	--	--
B	86	--	--
Be	1.5	--	--

6.2 Oxygen

Stream No. 2 (O_2 for pretreatment)	Bench Scale[5]	Pilot Plant[11,12]
Rate, kg/kg	Included in Stream No. 5	Pretreater not used

Stream No. 3 (O_2 for gasification)		
Rate, kg/kg	0.37	3.25 - 3.85

6.3 Steam

Stream No. 4 (steam for pretreatment)	Bench Scale[5]	Pilot Plant[11,12]
Rate, kg/kg Pressure, MPa (psia) Temperature	Not used in test (1.5 kg/kg N_2 used in place of steam)	Pretreater not used (CO_2 used to transport coal to the gasifier)

Stream No. 5 (steam for gasification)		
Rate, kg/kg	1.68	0.99 - 1.75
Pressure, MPa (psia)	4.0 (600)	4.0 (600)

6.4 Makeup Water (Stream 13) - no data available

6.5 Lockhopper Pressurization Gas (Stream 11) - CO_2 used at pilot plant

7.0 Intermediate Streams

7.1 Raw Product Gas (Stream 6) - no data available

8.0 Discharge Streams

8.1 Quenched Product Gas (Stream 9) - see Table A-54

8.2 Tars (Stream 7) - see Tables A-55 and A-56 for tar elemental and organics composition data from bench scale unit. No data available for pilot plant. Essentially no tars are produced in the process when deep bed coal injection is employed.

TABLE A-54. SYNTHANE QUENCHED PRODUCT GAS (STREAM NO. 9)

	Bench Scale[5]	Pilot Plant[15]	
		Run 1-T	Run 1-DB
Production Rate, Nm^3/kg (scf/lb)	0.76 (13)	20.2	23-25
Composition (Vol %)			
CO_2	37.4	51.5*	50-64*
CO	12.0	6	2.8-9.6
H_2	35.1	31	23-28
CH_4	12.8	10	7-11
C_2H_6	1.29	0.9	0.2-1.3
H_2S	1.43	0.3	0.1-0.8
N_2	--	0.3	0.0-0.3
COS	0.014	--	--
RSH	0.008	--	--
HCN	8.8×10^{-9}	--	--

*Includes about 0.25 Nm^3 of CO_2 per kg feed coal (4.3 scf/lb) used as transport, petrocarb, and purge gas. This accounts for about one-third to one-half of the CO_2 found in the product gas.

TABLE A-55. ELEMENTAL COMPOSITION OF TAR (STREAM NO. 7) PRODUCED IN IN THE SYNTHANE GASIFIER[5]

Tar Production Rate, kg/kg coal	0.03
C, %	83.0
H, %	6.4
O, %	6.4
N, %	1.2
S, %	2.7
Ash, ppm	1.2
U, ppm	0.01
As, ppm	0.71
Zn, ppm	0.48
Mn, ppm	2.2
Cr, ppm	7.1
V, ppm	0.21
P, ppm	14
F, ppm	0.97
B, ppm	12
Be, ppm	0.03

TABLE A-56. COMPOSITION OF BENZENE SOLUBLE TARS (STREAM NO. 7) PRODUCED IN THE SYNTHANE GASIFICATION PROCESS[4]

Compound/Class	Type/Origin of Coal			
	Bituminous (Illinois)	Lignite (N. Dakota)	Subbituminous (Montana)	Bituminous (Pennsylvania)
	Volume %			
Mono Aromatics				
Benzene	2.1	4.1	3.9	1.9
Phenols	2.8	13.7	5.5	3.0
Di Aromatics				
Naphthalenes	11.6	19.0	15.3	16.5
Indans/Indenes	10.5	5.0	7.5	8.2
Naphthols & Indanols	0.9	11.4	11.1	2.7
Tri Aromatics				
Phenylnaphthalenes	9.8	3.5	6.4	7.6
Acenaphenes	13.5	12.0	11.1	15.8
Fluorenes	9.6	7.2	9.7	10.7
Anthracenes/ Phenanthrenes	13.8	10.5	9.0	14.8
Acenaphthols	--	2.5	4.9	2.0
Phenanthrols	2.7	--	0.9	--
Tetracyclic Aromatics				
Pericondensed (benzanthracenes, chrysene)	7.2	3.5	4.9	7.6
Catacondensed (pyrene, benz-phenanthrenes)	4.0	1.4	3.0	4.1
Pentacyclic Aromatics	trace	not detected	not detected	trace
Heterocyclics				
Dibenzofurans	6.3	5.2	5.6	4.7
Dibenzothiophenes	5.2	1.0	1.5	2.4
Benznapththothiophenes				
N-Heterocyclics	10.8	3.8	5.3	8.8

8.3 Char (Stream 8) - see Table A-57

8.4 Condensate Blowdown (Stream 10) - see Tables A-58 and A-59

8.5 Decanter Wastewater (Stream 12) - no data available

8.6 Lockhopper Vent Gas - no data available

8.7 Pretreater Offgas - no data available; has not operated to date

9.0 Data Gaps and Limitations - The limitations in the data presented fall into two categories. First, most of the available data are for the PDU gasifier (which has been extensively tested); the pilot plant may yield data somewhat different than those for the PDU. Second, although, as presented above, some data are available on the characteristics of a number of input and discharge streams, the available data are not comprehensive in that not all streams are addressed and not all potential pollutants and toxicological and ecological properties are identified. An environmental data acquisition effort which would lead to the generation of the needed data corresponds to the EPA's phased level approach to multimedia environmental sampling and analysis[10].

10.0 Related Programs[6] - PERC and Carnegie-Mellon University are presently performing programs to determine process and effluent stream characteristics. An ambient sampling program is also being undertaken by PERC to determine baseline conditions as well as impacts caused by the pilot plant during operation.

TABLE A-57. SYNTHANE FILTER DUST (STREAM NO. 11) AND CHAR (STREAM NO. 8) FLOW RATES AND COMPOSITIONS

	Bench Scale Unit[5]	Pilot Plant	
		Run 1-T[11]	Run 1-DB-B/4[12]
Filter Dust Flow Rate,* kg/kg coal	0.013	--	--
C, %	75.0	63 - 66	51 - 71
H, %	1.7	2.9 - 3.7	1.1 - 2.3
O, %	2.1	--	--
N, %	0.8	0.6 - 0.7	0.4 - 0.8
S, %	1.3	0.3 - 0.4	0.3 - 0.6
Ash	<19	18 - 21	22 - 37
Hg, ppm	0.20	--	--
U, ppm	5.6	--	--
As, ppm		--	--
Zn, ppm	11	--	--
Mn, ppm	48	--	--
Cr, ppm	47	--	--
V, ppm	44	--	--
P, ppm	460	--	--
F, ppm	610	--	--
B, ppm	64	--	--
Be, ppm	7.2	--	--
Char/Ash Flow Rate, kg/kg coal	0.29	0.29 - 0.43	0.35
C, %	55.7	66.2	63.6
H, %	0.7	1.1	1.1
O, %	0.2	5.0	4.3
N, %	0.4	0.5	0.6
S, %	0.6	0.2	0.2
Ash, %	42	27.0	30.3
U, ppm	5.4	--	--
As, ppm	6.5	--	--
Zn, ppm	100	--	--
Mn, ppm	240	--	--
Cr, ppm	240	--	--
V, ppm	190	--	--
P, ppm	460	--	--
F, ppm	150	--	--
B, ppm	380	--	--
Be, ppm	4.6	--	--

*Dust is collected by dry filter in bench scale unit, solids are filtered from surge tank effluent in pilot plant.

TABLE A-58. CONDENSATE (STREAM NO. 10) FLOW RATE AND COMPOSITION FOR THE SYNTHANE BENCH SCALE UNIT*(4)

Constituent/ Parameter†	Illinois No. 6 Coal	Wyoming Sub-Bituminous	North Dakota Lignite	Western Kentucky Coal	Pittsburgh Seam Coal	Montana Rosebud Coal
pH	8.6	8.7	9.2	8.9	9.3	9.2
Suspended solids	600	140	64	55	23	68
Phenol	2600	6000	6600	3700	1700	3000
COD	14000	43000	38000	19000	19000	22000
Thiocyanate	152	23	22	200	188	31
Cyanide	0.6	0.23	0.1	0.5	0.6	0.07
Ammonia	8100	9500	7200	10000	11000	9500
TOC	6800	--	--	--	4980	9090
Condensate Rate, kg/kg coal	1.44	--	--	--	--	--
Elemental Analysis						
C, %	1.6	--	--	--	--	--
H, %	10.9	--	--	--	--	--
O, %	87.0	--	--	--	--	--
S, %	0.5	--	--	--	--	--
Hg, ppm	0.027	--	--	--	--	--
As, ppm	0.001	--	--	--	--	--
Zn, ppm	0.13	--	--	--	--	--
Mn, ppm	0.20	--	--	--	--	--
Cr, ppm	0.043	--	--	--	--	--
P, ppm	0.04	--	--	--	--	--
F, ppm	39	--	--	--	--	--
B, ppm	43	--	--	--	--	--

*No data reported on the pilot plant

†All data are mg/ℓ except pH

TABLE A-59. CONDENSATE BLOWDOWN (STREAM NO. 10) COMPOSITION* AND FLOW RATES AT SYNTHANE PILOT PLANT

	Pilot Plant Run No. (Ref.)	
	1-T[11]	1-DB[12]
Flow Rate (kg/kg coal)	0.6 - 1.2	0.6 - 0.8
Constituent/Parameter		
Total Suspended Solids	10,000 - 80,000	0 - 20,000
Phenols	220 - 3160	0 - 5
Chemical Oxygen Demand	4600 - 22,500	70 - 8000
Ammonia	79 - 3018	45 - 4400
Sulfide	0 - 210	4 - 276

*mg/l

REFERENCES

1. Massey, M.J., R.W. Dunlap, et al, Environmental Assessment in the ERDA Coal Gasification Development Program, prepared for ERDA, Carnegie-Mellon University, Pittsburgh, Penn., March 1977, ERDA FE-2496-6.

2. Handbook of Gasifiers and Gas Treatment Systems, prepared for ERDA, Dravo Corporation, Pittsburgh, Penn., February 1976, ERDA FE-1772-11.

3. Preliminary Economic Analysis of Synthane Plant Producing 250 Million SCFD High-Btu Gas from Two Coal Seams: Wyodak and Pittsburgh, prepared for ERDA, Bureau of Mines, March 1976, ERD-76-59.

4. Forney, A.J., et al, Analysis of Tars, Chars, Gases, and Water Found in Effluents from the Synthane Process, Symposium Proceedings: Environmental Aspects of Fuel Conversion Technology, May 1974.

5. Forney, A.J., et al, Trace Elements and Major Component Balances Around the Synthane PDU Gasifier, Symposium Proceedings: Environmental Aspects of Fuel Conversion Technology II, December 1975.

6. Scott, R.L. and Milvihill, J.W., Ambient Air Quality Assessment for the Synthane Coal Gasification Pilot Plant, Proceedings of the Fourth National Conference on Energy and the Environment, October 1976.

7. Haynes, W.P., et al, Synthane Process Update, Mid-'77 presented at the 4th Annual International Conference on Coal Gasification, Liquefaction and Conversion to Electricity, University of Pittsburgh, August 2-4, 1977.

8. Kalfadelis, C.D. and Magee, E.M., Evaluation of Pollution Control in Fossil Fuel Conversion Processes - Gasification: Section 1: Synthane Process, Esso Research and Engineering, Jun 1974.

9. Detman, R., Preliminary Economic Comparison of Six Processes for Pipeline Gas from Coal, presentation to the 8th Synthetic Pipeline Gas Symposium, October 18-20, 1976.

10. Dorsey, J.A., and Johnson, L.D., Environmental Assessment Sampling and Analysis: Phased Approach and Techniques for Level I, EPA-600/2-77-115, June 1977.

11. C.E. Lummus Co., Synthane Pilot Plant, Bruceton, Pa., Run Report No. 1 for operating period July-December 1976.

12. C.E. Lummus Co., Synthane Pilot Plant, Bruceton, Pa., Run Report No. 1-DB for operating period February-August 1977.

BIGAS PROCESS

1.0 General Information

1.1 Operating Principles - High pressure, two-stage gasification by high-velocity entrainment of coal in a steam and synthesis-gas mixture in the upper stage (Stage 2) of the gasifier (hydrogasification) and injection of oxygen plus steam and char in the lower stage (Stage 1). Char gasification occurs under slagging conditions.

1.2 Development Status[1,2] - The Bigas gasifier has been under development since 1965 by Bituminous Coal Research, Inc. (BCR). From 1969 to 1971, a 45-kg/hr (100-lb/hr) Stage 2 PEDU was operated. The operation demonstrated that high yields of methane righ gas could be obtained with both low and high rank coals. Under ERDA and AGA (American Gas Association) sponsorship, a 110-tonne/day (120-ton/day) integrated pilot plant was constructed (starting in 1972) in Homer City, Pennsylvania. The pilot plant construction was completed in June 1976 but start-up problems delayed the first gasification tests until late 1976. Steady state operations with char gasification have not been achieved to date. Test during 1977 have been aimed primarily at maintaining controlled slag flow from the bottom of the Stage 1 section of the gasifier. The successful demonstration of the Bigas process at the pilot plant awaits the resolution of several mechanical and operational/monitoring problems including maintenance of continuous slag flow, measurement of solids and slurry flow rates and measurement of gasifier internal temperatures.

1.3 Licensor/Developer - Bituminous Coal Research, Inc.
350 Hochberg Road
Monroeville, PA 15146

1.4 Commercial Applications - none.

2.0 Process Information

2.1 Process Engineering Development Unit (PEDU - see Figure A-16)

2.1.1 Gasifier

Equipment[3]

- Construction: Vertical, cylindrical steel pressure vessel, single stage refractory lines, for Stage 2. Stage 1 gasification is simulated by using a burner which partially oxidizes an aromatic solvent.

- Dimensions: 20 cm (8 in.) inside diameter downflow reactor. Volume 0.056 m^3 (1.96 cu ft).

- Bed type and gas flow: Coal particles entrained in continuous concurrent gas flow; vertical gas outlet at bottom of reactor. Continuous injection of steam plus coal and CO-rich gas which is generated in the Stage 1 burner.

- Heat transfer and cooling: The reactor uses direct gas-solid heat transfer. Helical water coils in the outer refractory wall provide gasifier cooling.

- Coal feeding: An 8-hour batch pressurized hopper supply is used with a metering feeder. The large amount of transport nitrogen used to pressurize the coal lockhopper affects product gas composition. Using a superheated steam jet, coal is injected vertically downwards at about 15 m/sec (50 ft/sec).

- Gasification media introduction: Saturated steam, oxygen and burner fuel form 1900°K (3000°F) synthesis gas in the PEDU Stage 1 burner. More steam arrives as the coal transport media.

- Char removal: Char in product gas is quenched in a water stream under the gasifier and sluiced to a separator. A stream of char in water is let down through a valve to a flash tank, and this flows to a settling tank.

Operating Parameters[3]

- Gas outlet temperature: Test program (50 to 60 tests in 1969-71) covered the range 1020°K-1450°K (1375°F-2160°F). For low-rank coals 110°K (1500°F) was typical; 1200°K (1700°F) for Pittsburgh seam coal.

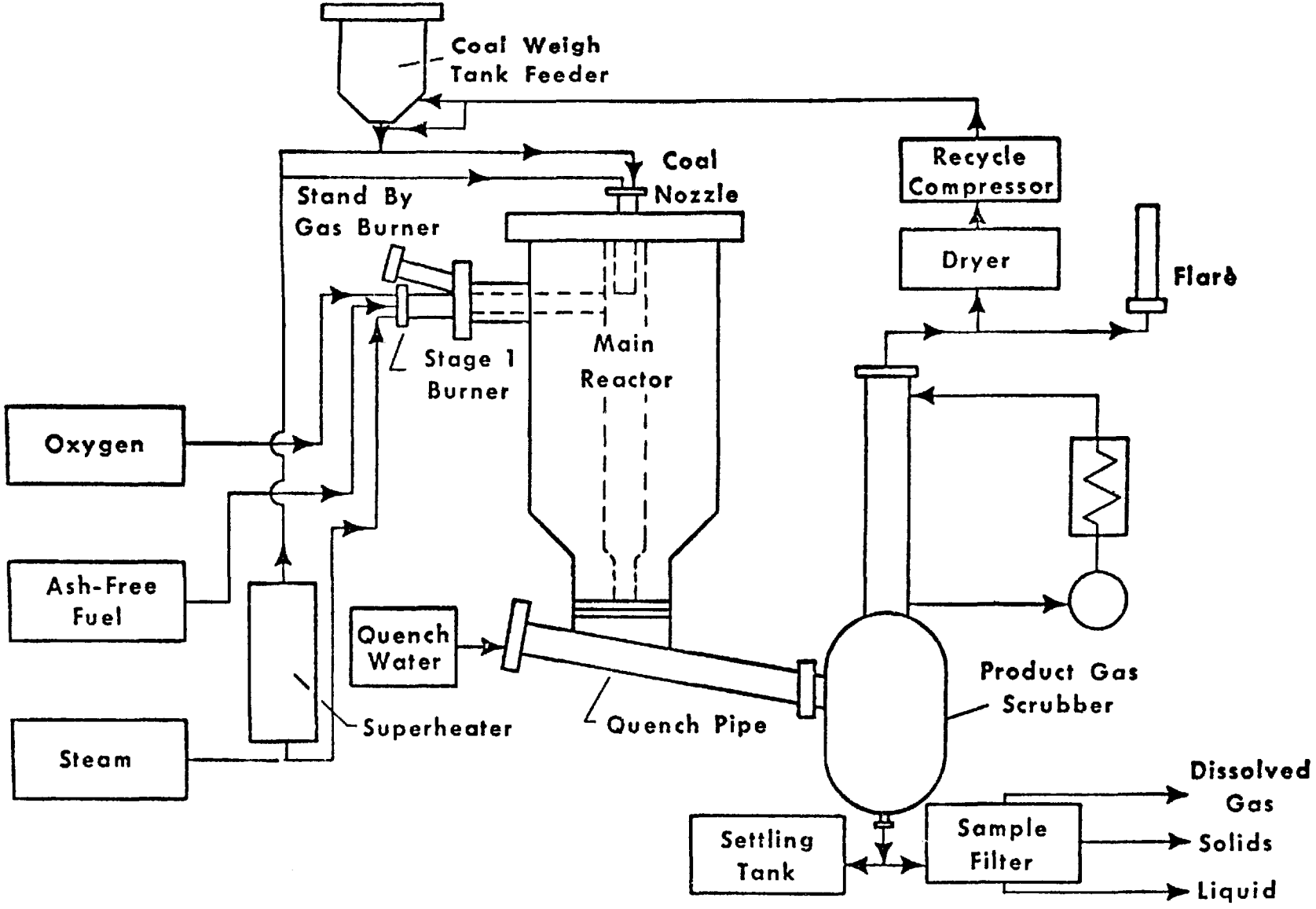

Figure A-16. Flow Diagram of 45-kg/hr (100 lb/hr) Stage 2 Bigas Process and Equipment Development Unit (PEDU)(3)

- Coal particle temperature: Injection at below 590°K (600°F) to avoid caking. After injection, the coal rapidly equilibrates with 1920°K (3000°F) burner gas.

- Gasifier pressure: Test program covered range 15 to 9.65 MPa (235-1435 psia). 6.8 MPa (1000 psia) was typical.

- Coal residence time in Stage 2: Test program covered a range of 3 to 22 seconds.

Raw Material Requirements[3,4]

- Coal feedstock

  Type: essentially any type, caking or noncaking.

  Size: 70 percent passing 200 mesh.

  Feed rates: covered range of 20-49 kg/hr (43 to 100 lb/hr).

- Coal pretreatment: none.

- Steam-to-coal ratio: ranged from 0.9 to 2.78 kg/kg.

- Oxygen-to coal ratio: ranged from 0.695 to 1.91 kg/kg.

- Others:

  Burner fuel (creosote or benzene) - 3.6-45 kg/hr (8-100 lb/hr).

  Startup fuel (natural gas) - 0.3-3.7 kg/hr (0.2 to 8.2 lb/hr); primary and secondary burner air 3-164 kg/hr (7 to 360 lb/hr).

  Coal hopper pressurization - 0-11 kg/hr (0-25 lb/hr).

Utility Requirements[3]

- Boiler feedwater: 6-159 kg/hr (13-350 lb/hr)

- Quench water: 68-250 kg/hr (150-550 lb/hr)

- Scrubber water: 2700-5680 kg/hr (6,000 to 12,500 lb/hr)

- Electricity: ?

- Cooling water: ?

Process Efficiency[3]

- Cold gas efficiency = $\frac{\text{[energy in cold product gas]}}{\text{[energy in coal feed]}}$

  = 38-85% depending on coal rank and operating conditions; generally lignites show higher efficiencies than bituminious coals

- Overall thermal efficiency = $\frac{\text{Total energy output}}{\text{Total energy input}}$

Turndown Ratio in Downflow Reactor[3] = $\frac{\text{Full Capacity Output}}{\text{Minimum sustainable output}}$

127% of nominal capacity down to 14% of capacity, based on product gas weight.

Gas Production Rate/Yield: 3-5 Nm^3/kg (51-85 scf/lb).

2.1.2 Coal Feed/Pretreatment - Coal is ball-milled to size; no pretreatment is needed.

2.1.3 Quench and Char Removal - Product gas and entrained char are quenched in an ambient temperature water stream under the gasifier and sluiced to a separator. A stream of char in water is let down through a valve to a flash tank, and then flows to a settling tank.

2.1.4 Miscellaneous Operations - Product gas is scrubbed with water, filtered and vented through a letdown valve, and burned in a flare.

2.2 Pilot Plant

2.2.1 Gasifier

Equipment (see Figures A-17 and A-18)[1,6]

- Construction: Vertical, cylindrical steel pressure vessel, 2-stage configuration, refractory lined in top two stages.

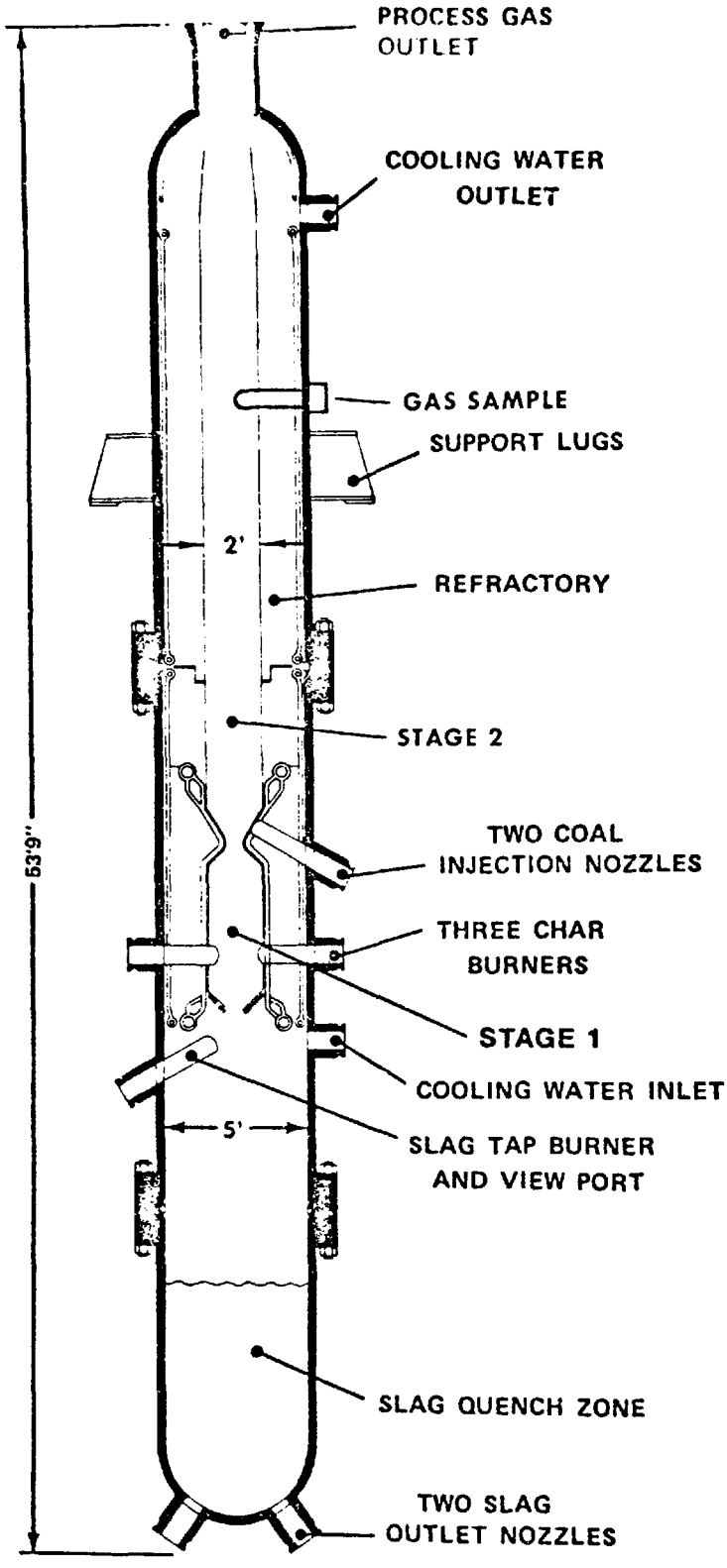

Figure A-17 Bigas Pilot Plant Gasifier(2)

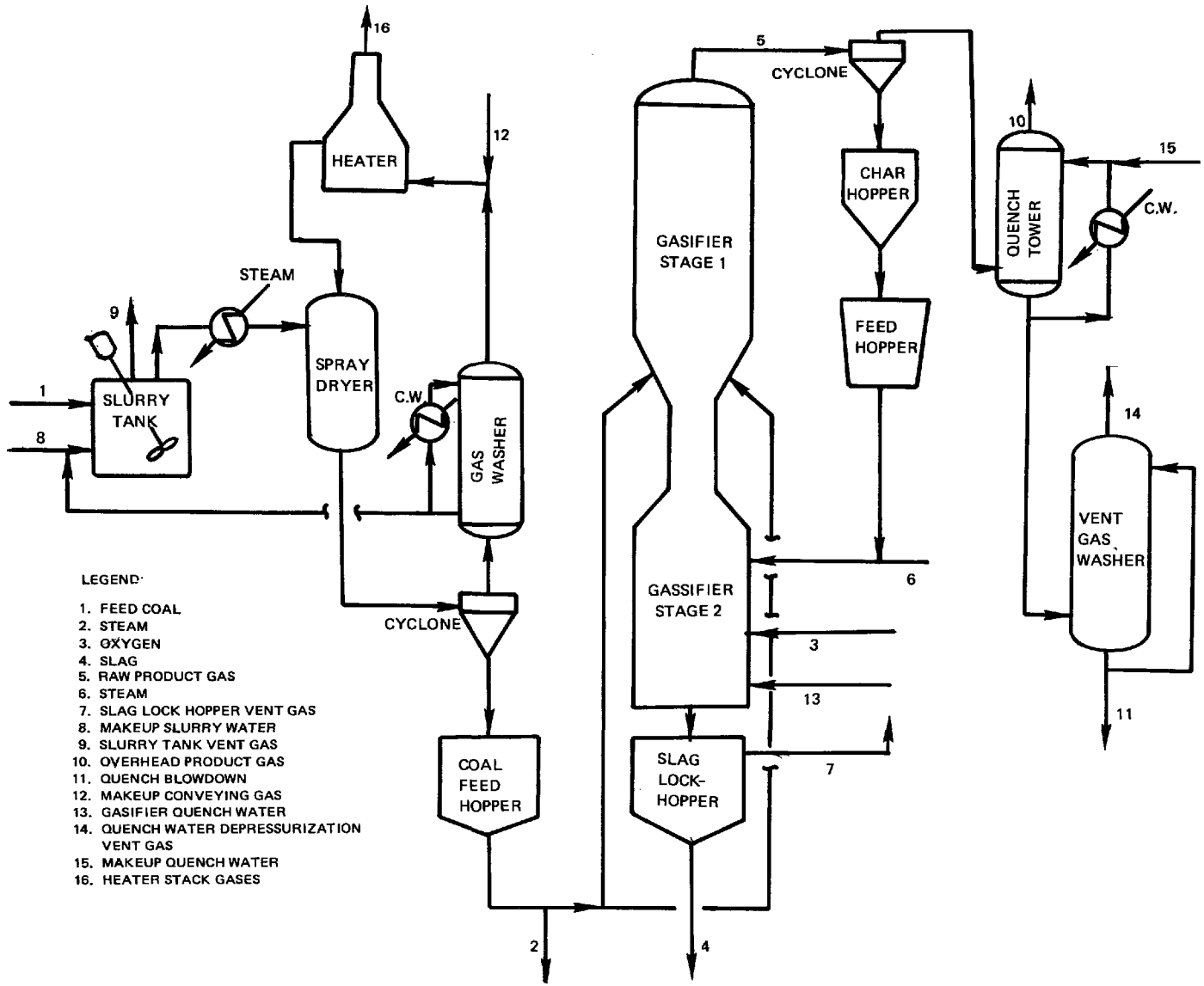

Figure A-18. Bigas Pilot Plant Flow Diagram

- Dimensions: Overall !6.4 m (53.75 ft) high; 0.9 m (3 ft) inside diameter of refractory sections, 1.5 m (5 ft) inside diameter of pressure shell. 4.0 m (13 ft) height of bottom (slag quench) zone; 1.8 m (6 ft) height of the center (char combustor) zone (Stage 1); 4.3 m (14 ft) height of the top (coal hydrogasification) zone (Stage 2). Wall thickness 9 cm (3.56 in.) for all .3 MPa (1165 psia) design pressure.

- Gasification media introduction: continuous injection of steam, oxygen, and char in the lower stage of the gasifier. Continuous injection of steam plus coal in the upper stage.

- Coal/char transport and gas flow: Coal/char particles entrained in continuous concurrent gas flow; vertical gas outlet at top of reactor.

- Ash-removal mechanism: Slag particles fall into a quench tank in the bottom of the reactor. The slag in water is removed and let down thorugh a lockhopper.

- Special features: The reactor uses direct gas/solid heat transfer. Vertical water tubes in the walls of the upper two stages provide gasifier cooling. Coal is fed by slurry injection with steam through nozzles in the upper stage of the gasifier. The slurry-feeding system elminates any moisture-content restrictions for coal feed. The external char cyclone removes entrained char particles from the raw gas and recycles the char to the gasifier lower stage to maximize carbon consumption. The 2-stage design maximizes methane production in the gasifier.

Operating Parameters

- Gas outlet temperature: 1200°K (1700°F)

- Maximum char/slag temperature: 1755°K (2700°F)(Stage 1)

- Gasifier pressure: 8 MPa (1175 psia) nominal; up to 10 MPa (1500 psia)

- Coal residence time in Stage 1: 2 sec.
  Stage 2: 6 sec.

- Mixing temperature (Stage 2): 1470°K (2200°F)

- Space rate: 14670 kg/hr/m^2 (300 lb coal/hr/ft^2)

Raw Material and Utility Requirements

- Coal feedstock

  Type - all types

  Size - 70% less than 75 μm (0.003 in. or 200 mesh)[6]

  Rate - up to 110 tonnes/day (120 tons/day); initial operations at 76 tonnes/day (84 tons/day)[1]

- Coal pretreatment: Oxidative pretreatment of caking coals is not necessary.

- Steam*: 0.72 kg/kg coal[2]

- Oxygen*: 0.56 kg/kg coal[2]

- Flue gas*: 0.22 kg/kg coal[2]

- Flux†: Limestone addition in the range of 15% - 30% of coal ash improves slag flow[2]

Utility Requirements

- Water: boiler feed - ?
  cooling water - ?

- Electricity: ?

Process Efficiency‡

- Cold gas efficiency: ?

- Overall thermal efficiency: ?

Expected Turndown Ratio‡:

Gas Production Rate/Yield‡: ?

---

*Test G-1: Char gasification simulated by partial oxidation of natural gas injection with steam and oxygen in char burners (Stage 1). Steam and oxygem consumption do not represent steady state coal and char gasification.

†Tests G-3 and G-4: Flux addition with char gasification

‡Steady state operations with char gasification have not been achieved at the pilot plant to date.

2.2.2 Coal Feed/Pretreatment (see Figure A-26) - Water slurry from coal preparation (70% through 200 mesh) is compressed to slightly greater than gasifier pressure with a triplex plunger pump, heated to about 518°K (475°F) with a stream preheater, and sprayed into a hot recycle gas stream to vaporize slurry water plus moisture in the as-received coal. The vaporized water plus recycle gas are separated from the dried coal in a cyclone. The recycle gas is water-washed, compressed and heated for return to the drying step. Water is then returned to coal preparation for reuse.

2.2.3 Quench and Dust Removal (see Figure A-18)[1,2] - Gases leaving Stage 2 with entrained residual char (carbon and ash) are quenched by water spray and flow to an external cyclone separator. Char is separated and drained into a char hopper.

Raw gas and uncollected fine char from the outlet of the cyclone separator enter the raw-gas scrubber and pass upward through a curtain of downward flowing water. The water scrubs the char dust, cools the gas, and condenses the moisture. Water is circulated by reflux pumps, and heat is rejected through an air cooler. A slip stream of the wash water is let down to atmospheric pressure through a valve, to vent-gas washer. Dissolved gases are released in the washer, and vented to a thermal oxidizer, and the slurry is drained to a waste pond.

3.0 Process Economics[8] - Investment capital costs for a commercial scale 7 million Nm^3/day (250 million scfd) Bigas plant have been estimated at $1.03 million (1976 dollars). The gasification, power recovery and raw-gas quench sections are estimated to account for 11.6 percent of the total installed capital cost.

4.0 Process Advantages

- Gasifier can accept all types of coal directly without oxidative pretreatment.
- No by-product tars, oil, or char which require additional processing are produced.
- Gas is produced at pipeline pressure.
- Cyclone char-recycle system should permit 99+ percent carbon conversion.
- Fine coal particles are not rejected as feed since the gasifier is designed to use pulverized fuel.
- The size and number of gasifier vessels in a commercial plant are minimized since entrainment design maximized throughput (lb/hr-ft^2) compared to fluidized- or fixed-bed design.
- A high percentage of methane is produced directly from coal in the gasifier, reducing shift and methanation duty.

5.0 Process Limitations

- Steady state hydrogasification and char gasification at the pilot plant have not been demonstrated.
- Ability to control slag flow has yet to be demonstrated.
- Durability of materials for slagging, high-temperature service in presence of reductants is not known.
- Pilot plant has limited ability to measure internal temperatures and various stream flow rates.
- The high-throughput, high-temperature process vessel has relatively high surface area/volume ratio and heat loss potential, a characteristic of entrainment gasifiers.

6.0 Input Streams

6.1 Coal (Stream 1) - see Table A-60.

6.2 Slurry Water (Stream 8) - no data available.

6.3 Steam (Streams 2 and 6) - see Sections 2.1.1 and 2.2.1.

6.4 Oxygen (Stream 3) - see Sections 2.1.1 and 2.2.1.

6.5 Makeup/Recycle Gas (Stream 12) - no data available.

6.6 Quench Water (Streams 13 and 15) - no data available.

TABLE A-60. PROPERTIES OF COALS WHICH HAVE BEEN GASIFIED IN THE BIGAS PEDU AND PILOT PLANT (STREAM NO 1)[2,3]

Coal Type	Subbituminous* (Montana Rosebud)	Bituminous* (Pittsburgh No. 8)	Lignite* (Mercer Co, N.D.)	Subbituminous* (Lincoln Co, Wyo)
Rate - kg/hr (lbs/hr)	3180 (7000)	23-35 (50-77)	28-49 (62-108)	47 (104)
HHV - kcal/kg (Btu/lb)	6360 (11400)	7720 (13890)	4430 (7980)	5690 (10250)
Volatile Matter (Wt %)	34.7	37.5	33.7	34.3
Moisture (wt %)	6.9	1.4	25.4	17.9
Ash (wt %)	10.6	6.2	8.2	3.5
Carbon (wt %)	66.4	78.1	48.2	59.2
Hydrogen (wt %)	5.03	5.4	3.2	4.3
Oxygen (wt %)	15.9	6.0	13.3	13.4
Nitrogen (wt %)	1.5	1.4	0.6	1.1
Sulfur (wt %)	0.8	1.5	1.1	0.7

*Only Rosebud coal has been employed for initial testing at the Homer City pilot plant; the other coals have been tested in the PEDU.

7.0 Intermediate Streams

7.1 Raw Product Gas (Stream 5) - no data available.

8.0 Discharge Streams

8.1 Quenched Product Gas (Stream 10) - see Table A-61.

8.2 Slag (Stream 4) - no data available.

8.3 Slurry Tank Vent Gas (Stream 9) - no data available.

8.4 Vent Gas Scrubber Blowdown (Stream 11) - no data available.

8.5 Vent Gas (Stream 14) - no data available.

8.6 Slag Lockhopper Vent Gas (Stream 7) - no data available.

8.7 Heater Flue Gas (Stream 16) - no data available; natural gas used as fuel at the pilot plant.

9.0 Data Gaps and Limitation - The Bigas process has not achieved steady state operation at the pilot plant, and available PEDU data do not reflect char gasification. Stream flow rates and composition data will have to be obtained through sampling and analysis during steady state periods of operation (when such conditions occur).

10.0 Related Programs - Penn Environmental Consultants (PEC), an service contractor, is to conduct an environmental sampling and analysis program for the pilot plant. Effluent water, gas and solids samples are to be obtained[6,9].

TABLE A-61. PROPERTIES OF PRODUCT GAS PRODUCED IN THE BIGAS PEDU GASIFIER (STREAM NO. 10)[3]

	Subbituminous (Montana Rosebud)	Bituminous (Pittsburgh No. 8)	Lignite (Mercer Co, N.D.)	Subbituminous (Lincoln Co, Wyo)
Gas Production Rate-Nm^3/kg (scf/lb)	--	(50-85)	(41-71)	(54)
HHV-kcal/Nm^3 (Btu/scf)	--	--	--	--
Composition (wt %)	--			
CO	--	18.6	15.0	18.5
H_2	--	31.5	38.3	35.8
CH_4	--	8.1	5.0	7.5
CO_2	--	21.1	22.6	22.6
N_2 + Ar	--	20.6*	19.0*	15.6*
H_2S	--	--	--	--
NH_3	--	--	--	--

*Nitrogen used to pressurize coal lockhopper.

REFERENCES

1. Dravo Corp., Handbook of Gasifiers and Gas Treatment Systems, ERDA Document No. FE-1772-11, February 1976.

2. Walker, K. E., Status of the Bi-Gas Pilot Plant Program, Ninth Synthetic Pipeline Gas Symposium, October 31-November 2, 1977, Chicago, Illinois.

3. BCR, Inc., Gas Generator R&D - Phase 2. Process and Equipment Development, Office of Coal Research R&D Report 20 - Final, August 1971.

4. Young, R. K., Current Status of Bi-Gas Process, presented to 3rd International Conference on Coal Gasification and Liquefaction: What Needs to be Done Now, University of Pittsburgh, August 1976.

5. Bituminous Coal Research, Quarterly Reports to ERDA, FE-1207-21, September 1976; ERDA FE-1207-25, January 1977; and ERDA FE-1207-29, April 1977.

6. Miles, J. M., Status of the Bi-Gas Program - Part 1, Pilot-Plant Activities, presentation to the 8th Synthetic Pipeline Gas Symposium, October 18-20, 1976.

7. Phillips Petroleum Co., FY1976 Annual Report to ERDA on Bigas Homer City Operation, ERDA FE-1207-P21, August 1976.

8. Detman, R., Preliminary Economic Comparison of 6 Processes for Pipeline Gas from Coal, presentation to the 8th Synthetic Pipeline Gas Symposium, October 18-20, 1976.

9. Massey, M. J., et al, Environmental Assessment in the ERDA Coal Gasification Development Program, Progress Report July 1976-December 1976, ERDA Document No. E(49-18)-2496, March 1977.

BATTELE-CARBIDE PROCESS
(Self-Agglomerating Ash)

1.0 General Information

1.1 Operating Principles - Moderate pressure gasification of coal in a steam-fluidized gasifier. Heat for gasification is provided by a circulating body of agglomerated ash heated in a separate burner vessel by combusting char or coal with air.

1.2 Development Status[1,2,5] - Early development work was done by the Union Carbide Corporation. A 23-tonne/day (25 TPD) process development unit has been constructed at West Jefferson, Ohio under the sponsorship of DOE (ERDA) and the AGA (American Gas Association). Tests of the integrated process (burner and gasifier) have indicated where modifications must be made in order to achieve performance goals.

1.3 Licensor/Developer - Battelle Memorial Institute
505 King Avenue
Columbus, Ohio 43201

1.4 Commercial Applications - None

2.0 Process Information

2.1 Process Development Unit (See Figure A-19)[3]

2.1.1 Gasifier (Figure A-20)[3]

Equipment

- Construction: vertical, cylindrical steel. The gasifier has three sections with I.D.s progressively increasing from bottom to top.

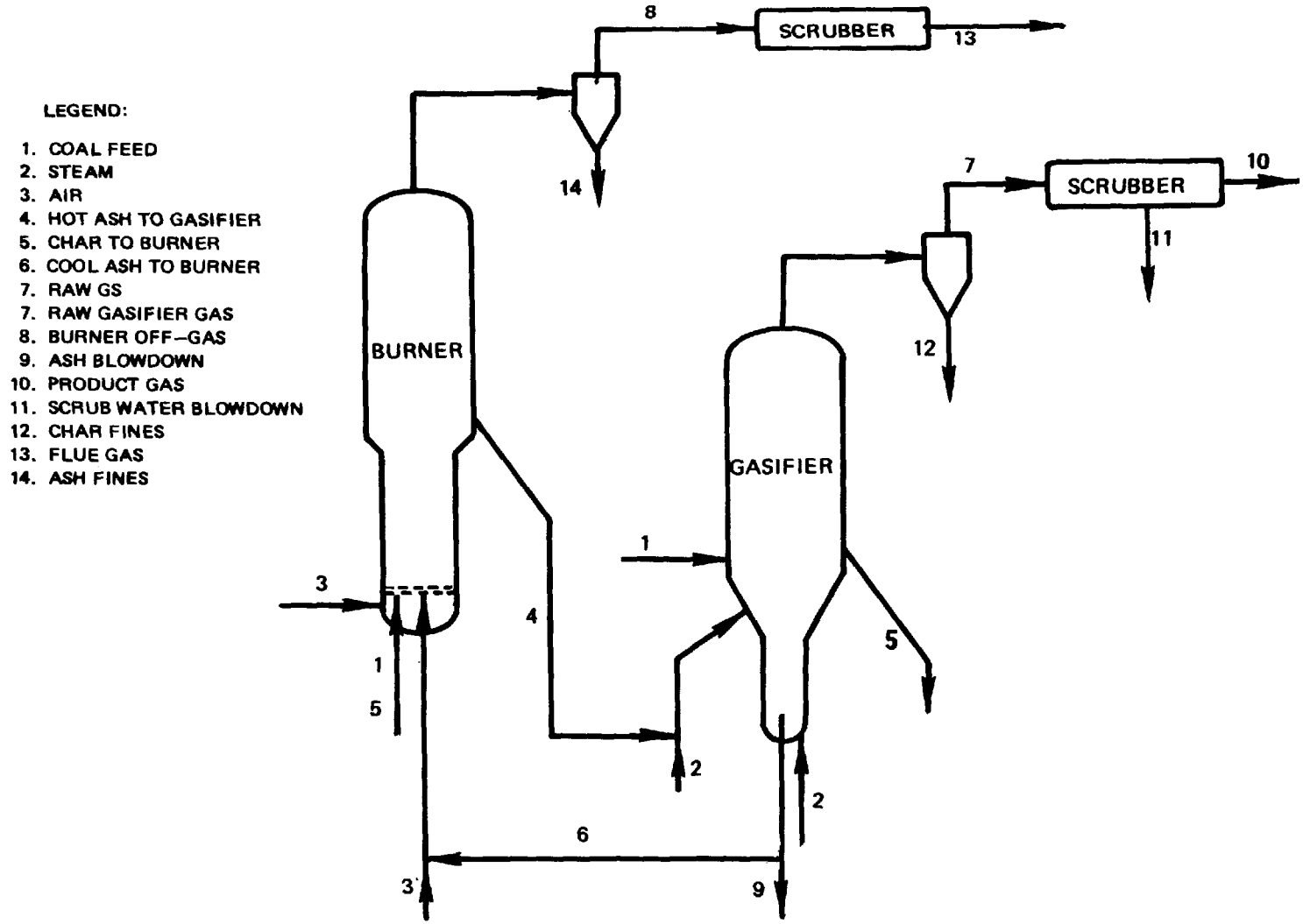

Figure A-19. Battelle-Carbide Gasification Process[3]

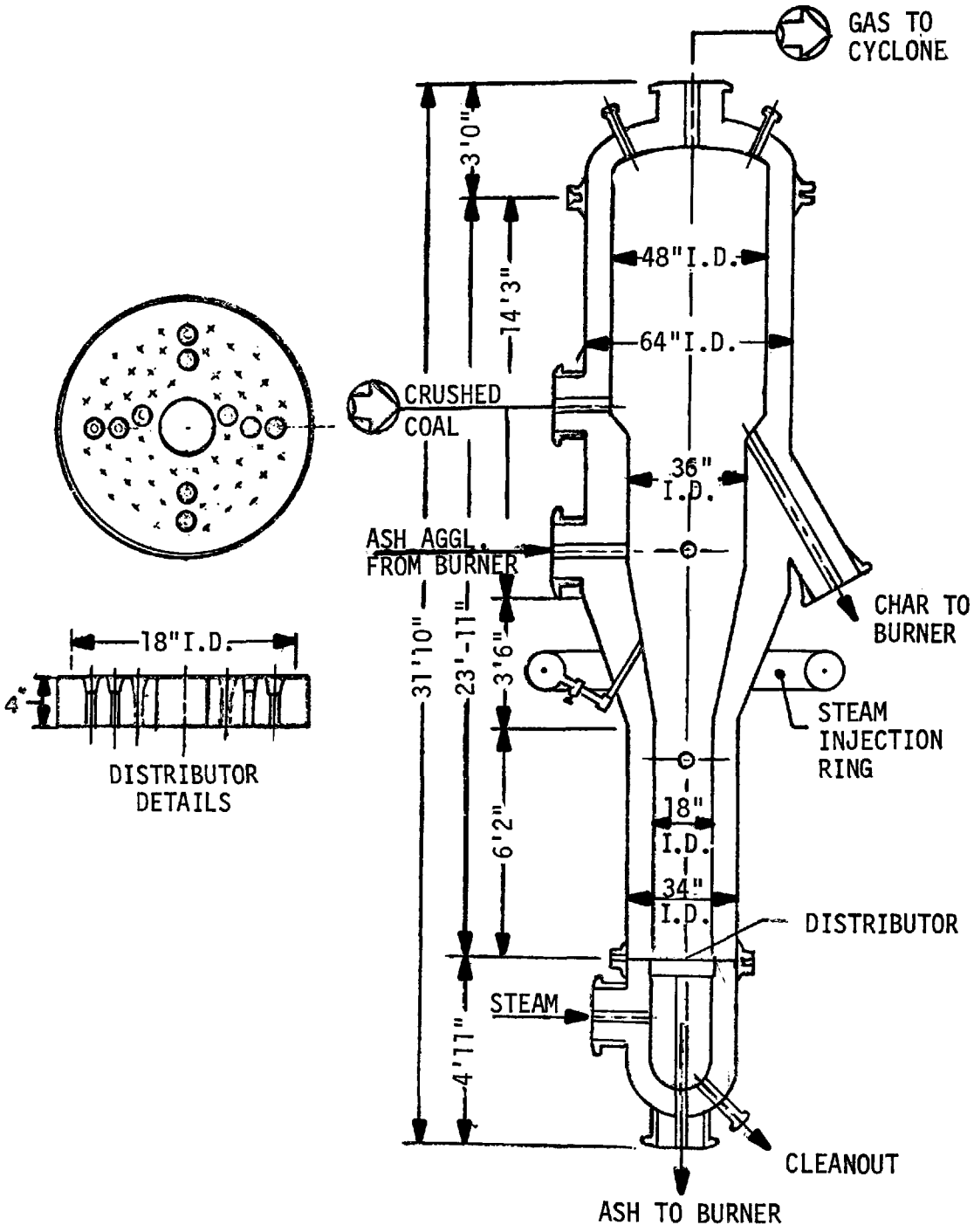

Figure A-20. Battelle-Carbide Gasifier(3)

- Dimensions: lower section vessel I.D. 45.7 cm (18 in)

  lower section shell I.D. 86.4 cm (34 in)

  middle section vessel I.D. 91.4 cm (36 in)

  upper section vessel I.D. 121.9 cm (48 in)

  upper section shell I.D. 162.6 cm (64 in)

  length 9.7 m (31.8 ft)

- Bed type and gas flow: fluidization is provided by continuous counter-current steam flow. Gas outlet on top of gasifier.

- Heat transfer and cooling: direct gas/solid heat transfer. Gasifier vessel lined with castable refractory.

- Coal feeding: from pretreater to lockhopper to gasifier pneumatically.

- Gasification media introduction: superheated steam injected 1) through a distributor plate located at the bottom of the gasifier and 2) at a higher level in the gasifier through an externally mounted, ring-type distributor.

- Ash removal: ash agglomerates are removed through a special opening in the steam distributor plate. Most of the ash is returned to the burner via an air lift; the remainder is removed via a lockhopper system for disposal.

Operating Parameters[3,5]

- Gas outlet temperature: 1144°K - 1255°K (1600°F - 1800°F)

- Coal bed temperature: 1088°K - 1255°K (1500°F - 1800°F)

- Gasifier pressure: 0.79 MPa (115 psia)

- Coal residence time: approximately 30 minutes

Raw Material Requirements[5]

- Coal feedstock

  Type: Eastern bituminous coal

  Size: +100-8 mesh

  Rate: 557 kg/hr (1225 lbs/hr)

- Coal pretreatment: pulverized to +100-8 mesh. Pretreatment expected to be unnecessary for caking coals but this has not been demonstrated to date since only noncaking coals have been tested at the PDU.

- Steam: 773 kg/hr (1700 lbs/hr)

- Air or oxygen: ?

Utility Requirements[5]

Water (Non optimum)

- Boiler: 31 l/min (8 gal/min)

- Quench: 310 l/min (80 gal/min)

- Cooling: 78 l/min (20 gal/min)

Electricity:

Process Efficiency:

- Cold Gas Efficiency[5]

$$\frac{\text{Energy in product gas output}}{\text{Total energy in coal input}} \times 100 = 66\%$$

- Thermal Efficiency

$$\frac{\text{Total energy in product gas, tar, oil and by-products}}{\text{Total energy in coal and electricity}} \times 100 = ?$$

Turndown Ratio:

$$\frac{\text{Full capacity output}}{\text{Minimum sustainable output}} = ?$$

Gas Production[2]

1.18 Nm^3/kg dry coal medium Btu-gas
(20 scf/lb dry coal) (estimated)

2.1.2 Burner (Figure A-21)[3]

Construction: vertical, cylindrical, in two sections

Dimensions: lower vessel I.D. 61.0 cm (24 in)

lower shell I.D. 106.7 cm (42 in)

upper shell I.D. 91.4 cm (36 in)

upper shell I.D. 137.2 cm (54 in)

length 7.14 m (23.4 ft)

Bed type: fluidized bed, co-current coal and air flow

- Heat transfer and cooling: direct solid/gas heat transfer. Vessel lined with castable refractory.
- Coal/char feeding: coal is transferred to the lock-hopper from the pretreater pneumatically. Feed coal is then mixed with recycle char from the gasifier and injected into the burner with air.
- Air feeding: air is fed with coal and recycle char and through a distributor plate at the bottom of the burner.
- Ash removal: ash particles overflow out of the burner and are transferred to the gasifier by a steam lift.

Operating Parameters[3,5]

- Gas outlet temperature: ~1366°K (2000°F)
- Bed temperature: 1366°K - 1422°K (2000°F - 2100°F)
- Burner pressure: 791 MPa (115 psia)
- Coal residence time in burner: estimated at less than 2 seconds.

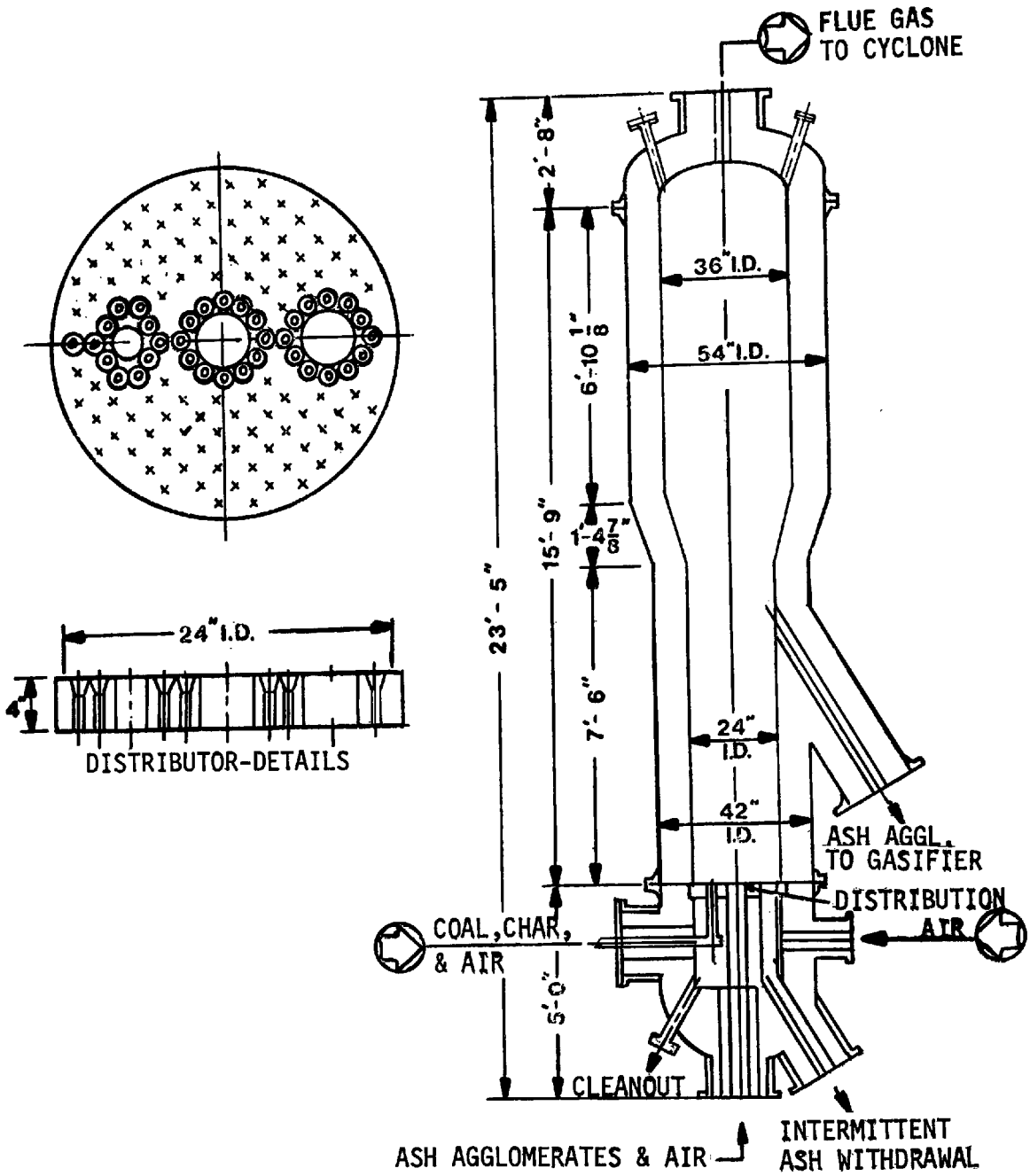

Figure A-21. Battelle-Carbide Burner[3]

Raw Material Requirements[3]

- Coal feedstock

  Type: Originally designed for eastern bituminous; only western subbituminous tested to date.

  Size: Minus 0.147 mm (minus 100 mesh)

  Rate: 444 kg/hr (977 lb /hr)

- Coal pretreatment - dried and pulverized to minus 100 mesh. No other pretreatment necessary.

- Air: approximately 70 Nm^3/min (2000 scf/min)

- Utility requirements: ?

2.1.3 Coal Feed/Pretreatment[3] - The sized coal is pneumatically conveyed with inert gas to two identical lockhopper trains maintained at a pressure higher than the system pressure. Coal is transferred to the gasifier from one train, and coal from the other train is mixed with recycle char from the gasifier and injected into the burner with air.

2.1.4 Quench and Dust Removal[3] - Both gasifier gas and flue gas from the combustor pass through cyclones and venturi scrubbers. Blowdown from the venturi scrubbers is sent to a settler.

3.0 Process Economics

No data currently available.

4.0 Process Advantages

- No need for an oxygen plant
- Hot flue gases can be expanded through a turbine
- Self-agglomerating coals (such as Eastern bituminous) can be converted to synthesis gas in this process.
- Gas produced is under pressure.

5.0 Process Limitations

- Limited experience with high pressure operations.
- Limited experience with recirculating agglomerated ash.

6.0 Input Streams[5]

6.1 Coal (Stream 1, Figure A-19) - Eastern bituminous (2.5%) sulfur 557 kg/hr (1225 lbs/hr)

6.2 Steam (Stream 2, Figure A-19) - 773 kg/hr (1700 lbs/hr)

6.3 Air (Stream 3, Figure A-19) - 70 Nm^3/min (2000 scf/min)

7.0 Intermediate Streams[5]

7.1 Ash to Gasifier (Stream 4, Figure A-19) - Approximately 18 tonnes/hr)

7.2 Char to Burner (Stream 5, Figure A-19) - No data available.

7.3 Recycle Ash to Burner (Stream 6, Figure A-19) - Approximately 18 tonnes/hr (20 tons/hr)

7.4 Raw Gasifier Gas (Stream 7, Figure A-19) - Approximately 1230 kg/hr (2700 lbs/hr) design rate.

8.0 Discharge Streams[4]*

8.1 Ash (Stream 9, Figure A-19) - 1.8-2.3 tonne/day (2-4 TPD) of coal ash.

8.2 Product Gas (Stream 10, Figure A-19) - 37,520 Nm^3/day (1.4 X 10^6 scfd) of (dry) composition:

Nitrogen	0.6%
Hydrogen	59.0%
Carbon Monoxide	36.5%
Carbon Dioxide	3.1%
H_2S	0.1%

*Stream rates and compositions are projected based on an operating rate equal to design capacity - 23 tonne/day (25 TPD).

8.3 Scrub Water (Stream 11, Figure A-19) - 94.6 l/min (25 GPM)

8.4 Char Fines (Stream 12, Figure A-19) - No data currently available

8.5 Flue Gas (Stream 13, Figure A-19) - 120,600 Nm^3/day (4.5×10^6 scfd) of (dry) composition

Nitrogen	81.0%
Oxygen	4.2%
Carbon Dioxide	14.7%
Sulfur Dioxide	2700 ppm

8.6 Ash Fines (Stream 14, Figure A-19) - No data

9.0 Data Gaps and Limitations

Although the PDU has been built, tests have not been completed. It is expected that two years are needed (January 1980) before an evaluation of the self-agglomerating ash process can be completed.

10.0 Related Programs

Scientific Design, Inc., N.Y. is presently completing an economic evaluation of a commercial scale 7×10^6 Nm^3/day (250×10^6 scfd) self-agglomerating ash plant. Results should be available during 1978.

REFERENCES

1. Adams and Corder, Agglomerating Burner Gasification Process; Design, Installation, and Operation of a 25 Ton-A-Day Process Development Unit. Quarterly Report - July-September 1976, November 1976, ERDA.

2. Information provided to TRW by H. Feldman of Battelle Columbus Laboratory, Nov 15, 1977.

3. Dravo Corp., Battelle/Carbide in: Handbook of Gasifiers and Gas Treatment Systems, pp. 27-31, Pittsburgh, Penn., 1976.

4. Letter, Carl Lyons (Battelle, Columbus) to L. Jablonsky (ERDA), Response to Questionnaire on Environmental Safety and Health.

5. Information provided to TRW by R. D. Litt of Battelle, March, 1978.

HYDROGASIFICATION (HYDRANE) PROCESS

1.0 General Information

1.1 Operating Principles - Direct reaction of coal with hydrogen (hydrogasification) to produce methane.

1.2 Development Status - The hydrogasification process has been tested in a special two-stage bench-scale reactor (the "Hydrane" gasifier) at Pittsburgh Energy Research Center (PERC), Bruceton, Pa. The two stages of the bench-scale Hydrane gasifier (free-fall dilute phase, FDP; and fluid/moving bed phase, FB/MB) were constructed as separate sections and were tested first separately and then in combination as a semi-integrated unit. A feasibility study providing the preliminary design for a 9.1 tonne (10 ton) per day PDU and a 27.2 tonne (30 ton) per day hydrogasification process using the Hydrane reactor design has been prepared for DOE by Dravo Corporation (Pittsburgh, Pa.). Based on studies conducted for and by DOE, in 1975 DOE concluded the Hydrane process was not feasible for commercialization[1].

Under DOE sponsorship, the Rocketdyne Division of Rockwell International Corporation (Canoga Park, Ca.) is currently testing a 0.23 tonne (0.25 ton) per hour, short residence time high throughput hydrogasification reactor which uses a proprietary "rocket injection" technology design for feeding pulverized coal into the reactor (see Section 2.2). This design appears to be superior to the Hydrane reactor design.

1.3 Licensor/Developer - The U.S. Department of Energy
20 Massachusetts Avenue
Washington, D.C. 20545

1.4 Commercial Applications - None

2.0 Process Informations

2.1 Hydrane Bench-Scale Reactor*[2]

2.1.1 Gasifier (Free-Fall Dilute Phase Stage†)

Equipment

- Construction: metal pipe; no additional information
- Dimensions: 8.3 cm (3.26 in) I.D. x 1.5 m (5 ft) L enclosed in 25.4 cm (10 in) I.D. pressure pipe.
- Bed type and gas flow: free-fall, concurrent downward gas-solid flow.
- Heat transfer and cooling: referred to as heated pipe reactor; no further description.
- Coal feeding: coal fed from a coal hopper by a rotary vane feeder and a nozzle.
- Gasification media introduction: continuous feeding of equimolar mixture of methane and hydrogen into top of reactor.
- Ash/char removal: char collected in an air-cooled receiver located below the reactor.

Operating Parameters

- Gas outlet temperature: ?
- Coal bed temperature: 998°K - 1173°K (1337°F - 1652°F); temperature measured in reactor wall
- Gasifier pressure: 3.5-20.8 MPa (515-3015 psia)
- Coal residence time in gasifier: 1.9-3.8 minutes, calculated from published data at 1173°K (1652°F) and pressures of 6.9 and 13.8 MPa (1000 and 2000 psia), respectively.

*Even though commercial hydrogasification facilities may not use the Hydrane reactor design, the Hydrane "process" is included here as most of the available hydrogasification test data have been obtained using the Hydrane bench-scale reactor. The PERC bench-scale unit is also still used on an as-needed basis to generate support data for hydrogasification research and development programs.

†Used in tests involving only the first stage of two-stage reactor system.

Raw Materials Requirements

- Coal feedstock
  - Type: Pittsburgh seam hvAb and Illinois #6 hvCb bituminous coals and North Dakota lignite
  - Size: Pulverized 0.15 - 0.25 mm (50-100 mesh)
  - Rate: 2.26 to 8.16 kg/hr (5 to 18 lb/hr)
- Coal pretreatment: none
- Simulated feed gas (H_2 + CH_4): 0.724 - 0.825 Nm^3/kg coal (12.3 - 14.0 scf/lb)*

Process Efficiency

- Cold gas efficiency:

  = (product gas energy output/coal energy input) x 100
  = ?

- Overall thermal efficiency:

  $$= \frac{\text{total energy output}}{\text{total energy input}} \times 100$$

  = ?

Expected Turndown Ratio (range tested): 2.26 to 8.16 kg/hr (5 to 18 lb/hr) coal feed rate.

Coal agglomeration beyond 8.61 kg/hr (18 lb/hr) with caking coals.

Gas Production Rate/Yield: 0.624 - 0.995 Nm^3(dry)/kg coal fed (10.6 - 16.9 scf/kg).

*In the 2-stage Hydrane reactor, gas fed to the dilute phase comes from the 2nd stage. In this case, simulated feed gas containing an equimolar mixture of methane and hydrogen, without carbon monoxide, was fed.

2.1.2 Gasifier (Fixed/Moving Bed Stage)†

Equipment

- Construction: ?
- Dimensions: 0.79 cm (5/16 in) I.D. x 81.3 cm (32 in) L
- Bed type and gas flow: inapplicable
- Heat transfer and cooling: gas/solids contact
- Gasification media introduction: inapplicable

Operating Parameters

- Gas outlet temperature: ?
- Coal bed temperature: (reactor temperature) 1073°K and 1173°K (1472°F and 1652°F) measured by thermocouples embedded in reactor wall
- Gasifier pressure: (reactor pressure) 7.0 MPa (1015 psia)
- Coal residence time in gasifier: coal conversion efficiencies were measured after 2, 10, 12 and 20 min

Raw Material Requirements

- Char feedstock
  - Type: char from bench scale dilute phase reactor described in Section 2.1.1
  - Size: 0.09 - 0.17 cm (0.035 - 0.067 in) particle size
  - Rate: single batch charge of 8 g (0.02 lb)
- Char pretreatment: none
- H_2: 0.03 Nm^3/hr (1.3 scf/hr)

---

†These data correspond to separate testing of the 2nd stage of the gasifier. The tests were primarily aimed at evaluating the effectiveness of carbon conversion in the second stage. An 8-gram (0.018 lb) charge of char (from the first stage) was reacted with hydrogen under the conditions described.

Process Efficiency

- Coal gas efficiency: not given directly; 54% carbon conversion at 1173°K (1652°F), 35% at 1073°K (1472°F)

No information available on gas production rate or yield

2.1.3 Gasifier (Integrated Laboratory Two-Stage Reactor) (see Figure A-22)

Equipment

- Construction: vertical, cylindrical two-section pipe with FDP section above MB section. (See Sections 2.1.1 and 2.1.2)

- Dimensions: overall length = 1.83 m (6 ft). See Sections 2.1.1 and 2.1.2 for dimensions of each section.

- Bed type and gas flow:

  - 1st stage: free-fall dilute phase (FDP); gas and coal flow concurrent downward.

  - 2nd stage: moving bed (MB): char from FDP and fresh hydrogen feed flow countercurrently - gas upwards, solids downwards.

- Heat transfer and cooling:

  - 1st stage: 0.92 m (3 ft) of this section is heated externally.

  - 2nd stage: gas/solids contact.

- Char feeding: from a coal hopper to a rotary vane feeder through a nozzle to top of FDP section. From 1st to 2nd stage, char feed is gravimetric through a 5.1 cm (2.0 in) necked down char transfer tube.

- Gasification media introduction:

  - 1st stage: continuous feeding of gas into the top of the gasifier along with fresh coal. Simulated gas was used instead of actual gas from the 2nd stage.

  - 2nd stage: continuous feed of hydrogen into the bottom of the unit.

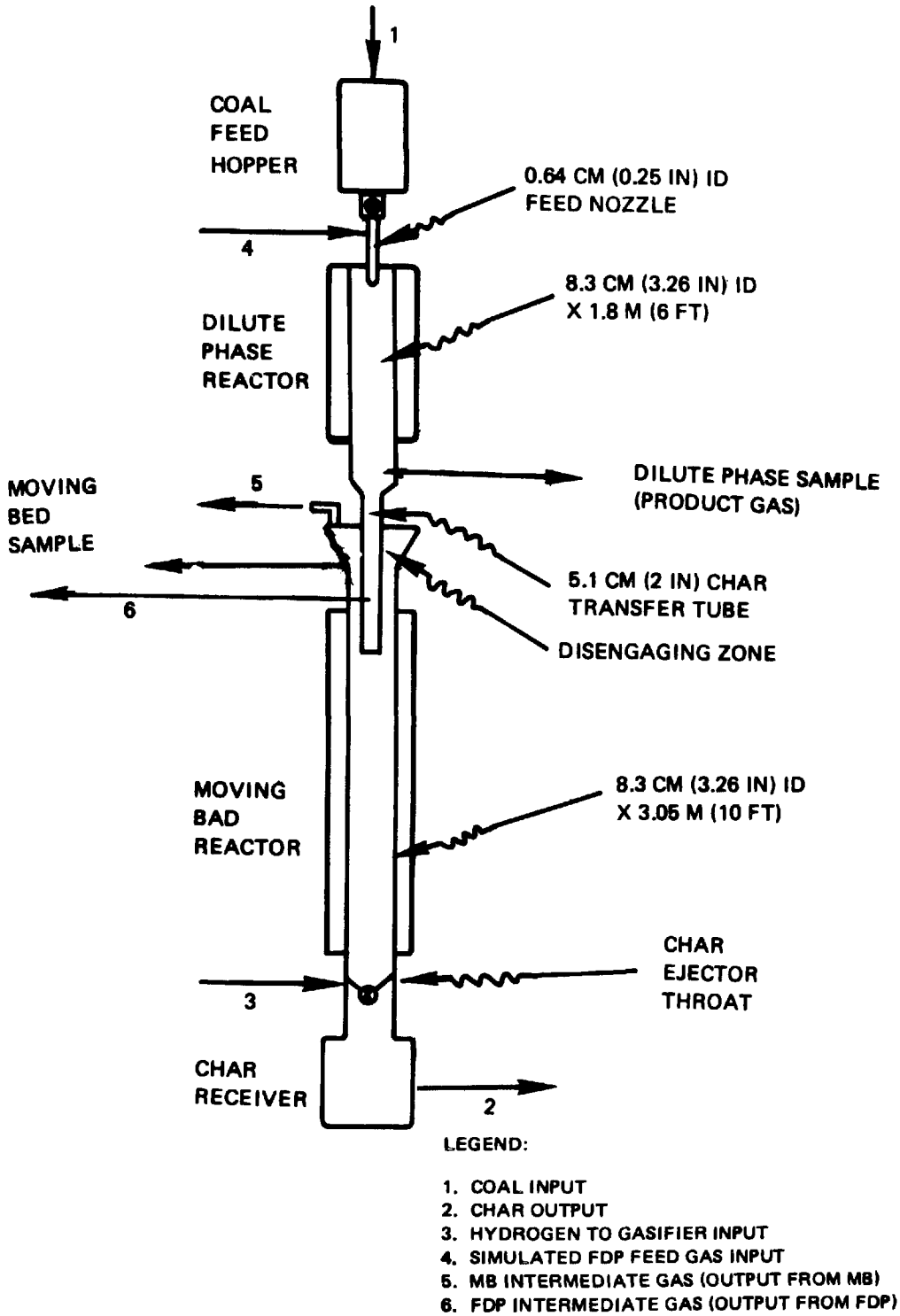

Figure A-22. Integrated Two-Stage Hydrane Reactor-Bench Scale Unit[2]

- Ash/char removal: gravity fall into converging char ejector throat and char receiver.

- Special features: although gasifier is integrated, simulated H_2/CH_4 feed gas is fed to FDP while product gas from 2nd stage exits through side vent. However, char from FDP serves as feed to 2nd stage.

Operating Parameters*

- Gas outlet temperatures: ?

- Coal bed temperatures:

  - 1st stage: 1073°K-1173°K (1473°F-1652°F)

  - 2nd stage: 973°K-1173°K (1292°F-1652°F)

- Gasifier pressure: 7.0 MPa (1015 psia), both stages.

- Coal residence time in gasifier:

  - 1st stage: data not given specifically, but should be about 1.9 min at 7.0 MPa (1015 psia) as was indicated in Section 2.1 for bench scale dilute phase reactor.

  - 2nd stage: 10.4 min.

Raw Material Requirements

- Coal feedstock

  - Type: Illinois #6

  - Size: pulverized coal of unspecified size was fed to 1st stage.

  - Rate: 1st stage - 4.7 kg (10.3 lb) per hr (dry basis)

    2nd stage - 2.27-3.02 kg (6.01-6.68 lb) per hr char (dry basis)

*Numbers below and other experimental data for 2nd stage refer to MB tests. FB tests were attempted but were plagued by problems and failed.

- Coal pretreatment: ?

- CH_4/H_2 mixture: as feed gas to 1st stage, 46/54 percent mixture fed at a rate of 4.46-4.86 Nm^3/hr (166-182 scf/hr).

- H_2: as feed to 2nd stage, 99% pure, 3.78-4.06 Nm^3/hr (141-152 scf/hr)

Process Efficiency

- Cold gas efficiency = $\frac{\text{product gas energy output}}{\text{coal energy output}} \times 100$
  = ?

- Overall thermal efficiency = $\frac{\text{total energy output}}{\text{total energy input}} \times 100$
  = ?

  Although thermal efficiency is not given, total carbon conversion is greater than 50% for both stages combined.

Expected Turndown Ratio: ?

Gas Production Rate/Yield

	Nm^3/kg coal (SCF/lb coal)
CH_4	0.4465 - 0.4594* (7.58 - 7.80)
C_2H_6	0.0077 - 0.0100 (0.13 - 0.17)
CO	0.0406 - 0.0471 (0.69 - 0.80)
CO_2	0.0053 - 0.-065 (0.09 - 0.11)
H_2S†	0.0018 - 0.1141 (0.03 - 0.07)

*Only 0.92 m (3 ft) of the normal 1.52 m (5 ft) length available for the moving bed section was used. The shorter residence time yielded 0.459 Nm^3 methane/kg dry coal (7.80 scf/lb) instead of 0.585 Nm^3/kg (9.93 scf/lb) expected.

†About 50% of the converted sulfur appeared in the gas product after water scrubbing.

2.2 Short Residence Time High Throughput Reactor†(3)

2.2.1 Gasifier (the 0.23 tonne/hr Rocketdyne unit)

Equipment

- Construction: metal pipe; no additional information.
- Dimensions: 7.6 cm (3 in) I.D. x 4.5 m (15 ft) high
- Bed type and gas flow: entrained bed (flow).
- Heat transfer and cooling: gas solid heat transfer.
- Coal feeding: the proprietary coal injection system is based on rocket nozzle technology; pulverized coal is pressure-fed to the reactor in the form of a dense coal stream (99.5% coal, 0.5% hydrogen carrier gas).
- Gasification media introduction: hot hydrogen gas is fed to the reactor; feeding mechanism not known.
- Ash/char removal: ?

Operating Parameters

- Gas outlet temperature: ?
- Coal bed temperature: reactor temperature 1200°K (1700°F)
- Gasifier pressure: ?
- Coal residence time in gasifier: 0.5 to 1 second.

---

†As was indicated in Section 1.2, under a 1-1/2 year contract with DOE, Rocketdyne is currently testing a 0.23-tonne (0.25-ton) per hr short residence time high throughput hydrogasification reactor. Under a subcontract to Rocketdyne, Cities Service Company of New Jersey is operating a much smaller scale "research" unit (0.9-0.18 kg/hr or 2-4 lb/hr) conducting parametric studies and "screening" tests prior to scale-up verification in the larger Rocketdyne unit. Very little information is available on the design features of the two units and on the test results obtained to date. The Rocketdyne study does not address char gasification which will be employed in commercial facilities to produce hydrogen for use in the gasification.

Raw Material Requirements

- Coal feedstock
  - Type: ?
  - Size: ?
  - Rate: unit design capacity 0.23 tonne (0.25 ton) per hr; the range of coal feed rates tested is not known.
- Coal pretreatment: none.
- Hydrogen feed rate: ?

Process Efficiency

- Cold gas efficiency:

  = (product gas energy output/coal energy input) x 100

  = ?

- Overall thermal efficiency:

  $$= \frac{\text{total energy output}}{\text{total energy input}} \times 100$$

  = ?

- Expected turndown ratio: operating range not known.
- Gas production rate/yield: not known; a 40% to 50% coal conversion has been achieved in the gasifier.

3.0 Process Economics

No data are available on the economics of the hydrogasification process using the Rocketdyne Reactor design.

A detailed economic analysis including sensitivity analysis has been published for a 6.25 x 10^9 kcal/day (250 x 10^9 Btu/day) two-stage Hydrane plant[2]. Total capital is $310,057,000 (Dec. 1974 dollars) based on Pittsburgh hvAb coal. The gasifier accounts for 14.5% of total capital or 17.3% of bare equipment cost. Dust removal equipment was not listed separately.

4.0 Process Advantages[2]

- Methane production directly from coal is high, reducing the requirement of catalytic methanation.*
- No pretreatment, thus minimizing coal losses and reducing process costs.
- Potentially very high thermal efficiencies and carbon utilization rates.
- Residual char from hydrogen plant (0.137 kg/kg dry coal) can be used as fuel for power plant[3]. This char is also low in sulfur.
- Product gas CO_2 concentration low (1%), therefore recovered H_2S can be fed directly to Claus plant.
- Caking coals can be used.
- Gas is produced at or near pipeline pressure.

5.0 Process Limitations

- The Hydrane process has been tested only in a laboratory bench scale unit; the Rocketdyne hydrogasifier is also in the bench scale development stage.
- Only pulverized coal can be fed to the hydrogasifier.

6.0 Input Streams

6.1 Coal/Char - see Tables A-62 and A-64

6.2 Hydrogen - see Table A-64.

6.3 Simulated FDP Feed Gas - see Tables A-62 and A-64.

6.4 Intermediate Char from FDP - see Tables A-63 and A-65.

7.0 Discharge Streams

7.1 Gaseous -
7.2 Liquids -
7.3 Solids -

see Tables A-63 and A-65

*In the Hydrane process, about 95% methane equivalent (CH_4 + C_2H_6) of the total required for pipeline gas is produced in the gasifier.

TABLE A-62. OPERATING DATA AND FEED RATES FOR THE INPUT STREAMS FOR HYDRANE BENCH SCALE DILUTE PHASE REACTOR TESTS(1)

Coal Type/Origin*	Pittsburgh Seam hvAb				Illinois #6 hvCb	North Dakota Lignite
Test No.	156	166	160	157	164	184
Coal Feed Rate						
kg/hr	5.4	5.4	5.4	5.4	5.4	5.4
(lb/hr)	(12)	(12)	(12)	(12)	(12)	(12)
Pressure						
MPa	7.0	8.4	10.4	13.9	8.4	7.0
(psia)	(1015)	(1215)	(1515)	(2015)	(1215)	(1014)
Temp., Gasifier†						
Max., °K(°F)	1173(1650)	1173	1173	1173	1173	1173
Avg., °K(°F)	1100(1520)	1100	1100	1100	1100	1100
Simulated Feed Gas Rate‡						
Nm^3/kg coal	0.724	0.724	0.772	0.730	0.825	0.724
(scf/lb coal)	(12.3)	(12.3)	(13.1)	(12.4)	(14.0)	(12.3)

*No coal composition data have been reported.

†Thermocouples were placed in the wall of the gasifier.

‡Simulated gas is 50/50 CH_4/H_2.

TABLE A-63. DISCHARGE STREAM RATES AND COMPOSITIONS FOR HYDRANE BENCH SCALE DILUTE PHASE REACTOR TESTS(2)

Test No.*	156	166	160	157	164	184
Product Gas Rate						
Nm^3/kg coal	0.789	0.783	0.795	0,819	0.995	0.624
(as $CO+H_2+CH_4+C_2H_6$)						
(SCF/lb coal)	(13.4)	(13.3)	(13.5)	(13.9)	(16.9)	(10.6)
Carbon Converted, %	25.0	25.6	24.2	30.0	27.8	32.1
Gas Analysis, % (dry basis)						
H_2	22.4	22.7	19.7	18.1	21.9	27.9
O_2	--	--	--	--	--	--
CO	3.2	2.3	1.4	0.5	2.4	6.3
CH_4	71.4	72.2	75.2	79.0	72.8	57.5
CO_2	0.7	0.5	0.8	0.4	0.7	5.9
C_2H_6	0.5	0.1	0.3	0.1	0.0	0.1
H_2S	0.4	0.2	0.1	0.2	0.3	0.1
N_2	1.4	2.3	2.4	1.7	1.9	2.1
HHV						
kcal/Nm^3	6889	6872	7040	7277	6897	5860
(Btu/SCF)	(817)	(815)	(835)	(863)	(818)	(695)
Condensate Rate†						
Kg/kg coal	0.01 to 0.08				0.05-0.09	--
Char/Ash Rate (Total)						
kg/kg dry coal	0.70	0.70	0.71	0.66	0.68	--
Oil Rate						
kg/kg coal	0.01 - 0.06					

*See Table A-62 for coal type used.

†The main contaminants in the water were phenols, cresols, xylenols, naphthalene, anthracene and indole.

TABLE A-64. OPERATING DATA AND INPUT STREAM RATES AND COMPOSITIONS FOR HYDRANE BENCH SCALE TWO-STAGE REACTOR TESTS (FIGURE A-22)(2)

Test No.	46		48		49	
Reactor State	FDP*	MB†	FDP	MB	FDP	MB
Coal or Char Feed Rate						
kg/hr (dry)	1.33	0.84	1.30	0.64	1.30	0.63
(lb/hr)	(10.51)	(6.68)	(10.26)	(5.08)	(10.32)	(5.01)
Pressure						
MPa	7.0	7.0	7.0	7.0	7.0	7.0
(psia)	(1014)	(1014)	(1014)	(1014)	(1014)	(1014)
Temp., Gasifier						
°K	1123	957	1123	1073	1123	988
(°F)	(1562)	(1263)	(1562)	(1472)	(1562)	(1319)
Residence Time, min.	--	0	--	10.4	--	10.4
Run Time, min.	187		193		187	
Hydrogen Rate to MB						
Nm^3/hr	--	3.78	--	4.07	--	4.03
(SCF/hr)	--	(141.4)	--	(152.0)	--	(150.7)
Simulated Feed Gas Rate to FDP						
Nm^3/hr	4.4	3.8	4.9	4.1	4.5	4.1
(SCF/hr)	(164.4)	(141.4)	(181.7)	(152.0)	(166.2)	(150.7)
Vol % H_2	56.2	99.4	52.0	99.0	50.9	98.6
CH_4	37.2	--	42.1	--	42.8	--
N_2	1.05	0.50	1.10	1.00	1.5	1.30
He	5.45	--	4.7	--	4.7	--

*FDP: free-fall dilute phase reactor (0.9 m or 3 ft heated length)

† MB: moving-bed reactor

TABLE A-65. DISCHARGE STREAM RATES AND COMPOSITIONS FOR HYDRANE BENCH SCALE TWO-STAGE REACTOR TESTS (FIGURE A-22)(2)

Test No.	46		48		49	
Reactor Stage	FDP	MB	FDP	MB	FDP	MB
Product Gas Rate ($CO+H_2+CH_4+C_4H_6$)						
Nm^3/kg dry coal	0.209	--	0.510	--	0.501	--
(SCF/lb dry coal)	(3.55)	--	(8.66)	--	(8.51)	--
Gas Yields (dry coal basis)						
CH_4, Nm^3/kg	0.177	--	0.459	--	0.446	--
(SCF/lb)	(3.01)	--	(7.80)	--	(7.58)	--
C_2H_6, $Nm^3/kg \times 10^{-3}$	6.48	--	10.01	--	7.66	--
(SCF/lb)	(0.11)	--	(0.17)	--	(0.13)	--
CO, Nm^3/kg	0.0253	--	0.0406	--	0.0471	--
(SCF/lb)	(0.43)	--	(0.69)	--	(0.80)	--
CO_2, $Nm^3/kg \times 10^{-3}$	5.89	--	5.30	--	6.48	--
(SCF/lb)	(0.10)	--	(0.09)	--	(0.11)	--
H_2S, $Nm^3/kg \times 10^{-3}$*	2.36	--	1.77	--	4.12	--
(SCF/lb)	(0.04)	--	(0.03)	--	(0.07)	--
Oil Yield, kg/kg dry coal	0.048	--	0.041	--	0.026	--
Char/Ash Rate						
kg/kg coal	--	--	--	--	--	--
Solids Conversion, wt. %						
MAF Coal	--	43.1	--	60.2	--	60.4
C	--	33.0	--	50.7	--	53.6
H	--	75.4	--	96.4	--	93.5
S	--	66.7	--	74.8	--	76.3
N	--	59.4	--	89.7	--	86.4
O	--	91.0	--	99.6	--	90.0

*About 50% of the converted sulfur appears in the gas product after water scrubbing.

8.0 Data Gaps and Limitations

The limitations in the data presented are primarily due to the fact that the hydrogasification process (Hydrane and Rocketdyne Reactor Designs) is only in the bench scale development stage with effort primarily aimed at evaluating the feasibility of hydrogasification and testing the proposed reactor designs. Even the bench scale Hydrane reactor for which some data are available has only been tested as a semi-integrated unit (i.e., a simulated gas and not the gas produced in the second stage was fed to the first stage).

9.0 Related Programs

The Rocketdyne current 1-1/2 year contract with DOE to build and test a 0.23 tonne/hr (0.25 ton/hr) short residence time high throughput hydrogasifier (see Sections 1.2 and 2.2) will expire by the end of FY 1978. Pending favorable test results, the effort may be followed by design, construction and testing of a PDU, perhaps 9 to 18 tonne (10 to 20 ton) per day capacity. The bench scale Hydrane gasifier at PERC's Bruceton, Pa facility is used periodically on an "as needed" basis for parametric hydrogasification studies.

REFERENCES

1. Information provided to TRW by Mr. Louis Jablansky, Department of Energy Oct. 30, 1977.

2. Gray, J. A., and P. M. Yavorsky, The Hydrane Process. In: Clean Fuels from Coal II, 6th Synthetic Pipeline Gas Symposium, U.S. ERDA, PERC, Pittsburgh, Pa., 1974. pp 159-175.

3. Information provided to TRW by Mr. Joe Friedman, Rocketdyne Division, Rockwell International Corporation, November 14, 1977.

KOPPERS-TOTZEK PROCESS

1.0 General Information

1.1 Operating Principles - High temperature gasification of coal at atmospheric pressure with co-current flow of coal, oxygen and steam.

1.2 Development Status - Commercially available since 1952.

1.3 Licensor/Developer - Krupp Koppers, GmbH
Essen, W. Germany

In U.S. - Koppers Company, Inc.
Koppers Building
Pittsburgh, Pa. 15219

1.4 Commercial Applications - 54 gasification units are currently in operation, 47 using coal as feedstock (see Table A-66). Existing coal gasifiers are used entirely to make synthesis gas for the production of ammonia.

2.0 Process Information

2.1 Commercial Units - see Figure A-23, Flow Diagram

2.1.1 Gasifier (see Figures A-23 and A-24)

Equipment

- Gasifier construction: horizontal ellipsoidal, double walled steel vessel with refractory lining. There are two gasifier designs. The two-headed gasifier (Figure A-32) has heads shaped as truncated cones mounted on either end of the ellipsoid. The four-headed gasifier (Figure A-33) resembles two intersecting ellipsoids with heads at the ends of the ellipsoids oriented 90° apart(8).

- Gasifier dimensions: (see Figure A-24)

- Bed type and gas flow: entrained bed; continuous co-current gas/solids flow; vertical gas outlet at the top of the gasifier in the center of the ellipsoid.

TABLE A-66. GASIFICATION PLANTS USING THE K-T PROCESS[6]

Location	Fuel	Number of Gasifier Units	Capacity $CO + H_2$ in 24 Hours	Use of Synthesis Gas	Year of Order
Carbonnages de France, Paris, Mazingarbe Works (P.d.C.) France	Coal Dust, Coke-Oven-Gas, Tail Gas	1	75,000-150,000 Nm^3 2,790,000-5,580,000 SCF	Methanol and Ammonia Synthesis	1949
Typpi Oy, Oulu Finland	Coal Dust, Oil, Peat	3	140,000 Nm^3 5,210,000 SCF	Ammonia Synthesis	1950
Nihon Suiso Kogyo Kaisha, Ltd., Tokyo Japan	Coal Dust	3	210,000 Nm^3 7,820,000 SCF	Ammonia Synthesis	1954
Empresa Nacional "Calvo Sotelo" de Combustibles Liquidos y Lubricantes, S.A., Madrid, Nitrogen Works in Puentes de Garcia Rodriguez, Coruna Spain	Lignite Dust	3	242,000 Nm^3 9,000,000 SCF	Ammonia Synthesis	1954
Typpi Oy, Oulu Finland	Coal Dust, Oil, Peat	2	140,000 Nm^3 5,210,000 SCF	Ammonia Synthesis	1955
S.A. Union Chimique Belge, Brussels, Zandvoorde Works Belgium	Bunder-C-Oil Plant convertible for Coal Dust Gasification	2	176,000 Nm^3 6,550,000 SCF	Ammonia Synthesis	1955
Amoniaco Portugues S.A.R.L., Lisbon, Estarreja Plant Portugal	Heavy Gasoline, Plant extendable to Lignite-and Anthracite Dust Gasification	2	169,000 Nm^3 6,300,000 SCF	Ammonia Synthesis	1956
The Government of the Kingdom of Greece, The Ministry of Coordination, Athens, Nitrogenous Fertilizer Plant, Ptolemais, Greece	Lignite Dust, Bunker-C-Oil	4	629,000 Nm^3 23,450,000 SCF	Ammonia Synthesis	1959

Continued

TABLE A-66. Continued.

Location	Fuel	Number of Gasifier Units	Capacity $CO + H_2$ in 24 Hours	Use of Synthesis Gas	Year of Order
Empresa Nacional "Calvo Sotelo" de Combustibles Liquidos y Lubricantes, S.A., Madrid, Nitrogen Works in Puentes de Gracia Rodriguez, Coruna, Spain	Lignite Dust or Naphtha	1	175,000 Nm^3 6,500,000 SCF	Ammonia Synthesis	1961
The General Organization for Executing the Five Year Industrial Plan, Cairo, Nitrogen Works of Societe el Nasr d' Engrais et d'Industries Chimiques, Attaka, Suez United Arabian Republique	Refinery Off-Gass, L.P.G. and Light Naphtha	3	778,000 Nm^3 28,950,000 SCF	Ammonia Synthesis	1963
Chemical Fertilizer Company Ltd., Thailand, Synthetic Fertilizer Plant at Mao Moh, Lampang Thailand	Lignite Dust	1	217,000 Nm^3 8,070,000 SCF	Ammonia Synthesis	
Azot Sanayii T.A.S., Ankara Kutahya Works Turkey	Lignite Dust	4	775,000 Nm^3 28,850,000 SCF	Ammonia Synthesis	1966
Chemieanlagen Export-Import G.m.b.H., Berlin für VEB Germania, Chemieanlagen and Apparatebau, Karl-Marx-Stadt VEB Zietz Works	Vacuum residue and/or fuel oil	2	360,000 Nm^3 13,400,000 SCF	Raw gas to produce hydrogen for hydro-generation	1966
Kobe Steel Ltd., Kobe, Japan for Industrial Development Corp., Zambia, at Kafue near Lusaka Zambia, Africa	Coal Dust	1	214,320 Nm^3 7,980,000 SCF	Ammonia Synthesis	1967

Continued

TABLE A-66. Continued

Location	Fuel	Number of Gasifier Units	Capacity $CO + H_2$ in 24 Hours	Use of Synthesis Gas	Year of Order
Nitrogenous Fertilizers Industry S.A., Athens, Nitrogenous Fertilizers Plant Ptolemais, Greece	Lignite Dust	1	165,000 Nm^3 6,150,000 SCF	Ammonia Synthesis	1969
The Fertilizer Corporation of India Ltd, New Delhi, Ramagundam Plant, India	Coal Dust	4 (1 of them as standby)	2,000,000 Nm^3 74,450,000 SCF	Ammonia Synthesis	1969
The Fertilizer Corporation of India Ltd., New Delhi Talcher Plant, India	Coal Dust	4 (1 of them as standby)	2,000,000 Nm^3 74,450,000 SCF	Ammonia Synthesis	1970
Nitrogenous Fertilizers Industry S.A., Athens Nitrogenous Fertilizers Plant Ptolemais, Greece	Lignite Dust	1	242,000 Nm^3 9,009,000 SCF	Ammonia Synthesis	1970
The Fertilizer Corporation of India Ltd., New Delhi, Korba Plant, India	Coal Dust	4 (1 of them as standby)	2,000,000 Nm^3 74,450,000 SCF	Ammonia Synthesis	1972
AE & Cl Ltd., Johannesburg, Modderfontein Plant, South Africa	Coal Dust	6	2,150,000 Nm^3 80,025,000 SCF	Ammonia Synthesis	1972
Indeco Chemicals Ltd., Lusaka, Kafue Works, Zambia	Coal Dust	1	220,800 Nm^3 8,220,000 SCF	Ammonia Synthesis	1974
Indeco Chemicals Ltd., Lusaka, Kafue Works Zambia	Coal Dust	2	441,660 Nm^2 16,440,000 SCF	Ammonia Synthesis	1975

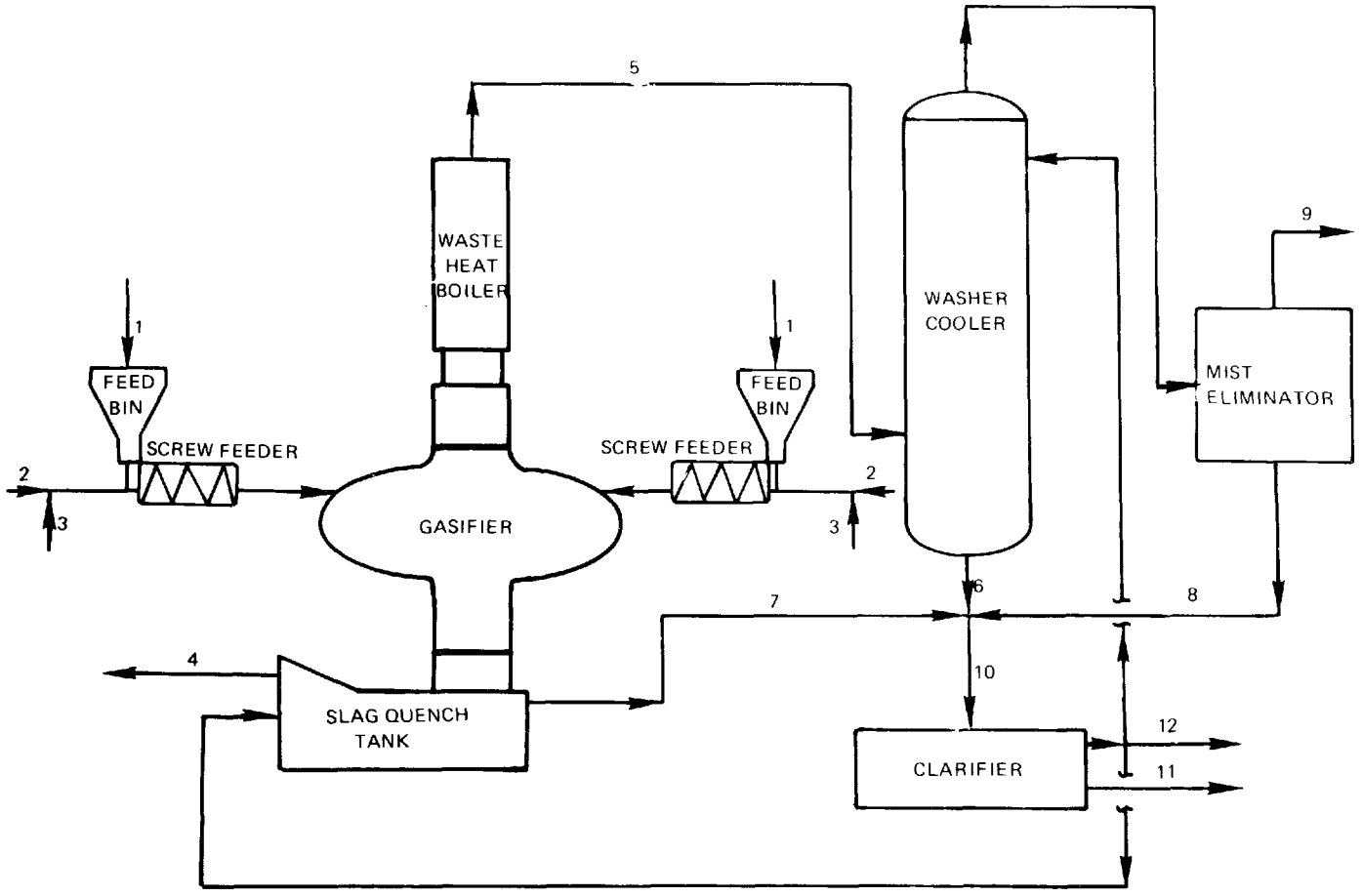

LEGEND:

1. COAL
2. STEAM
3. OXYGEN
4. SLAG FROM QUENCH TANK
5. COOLED PRODUCT GAS
6. WASHER COOLER BLOWDOWN
7. QUENCH BLOWDOWN
8. MIST ELIMINATOR BLOWDOWN
9. QUENCHED PRODUCT GAS
10. COMBINED EFFLUENT TO CLARIFIER
11. CLARIFIER SLUDGE
12. CLARIFIER EFFLUENT (TO DISCHARGE OR RECYCLE)

Figure A-23. Koppers-Totzek Coal Gasification Process[8]

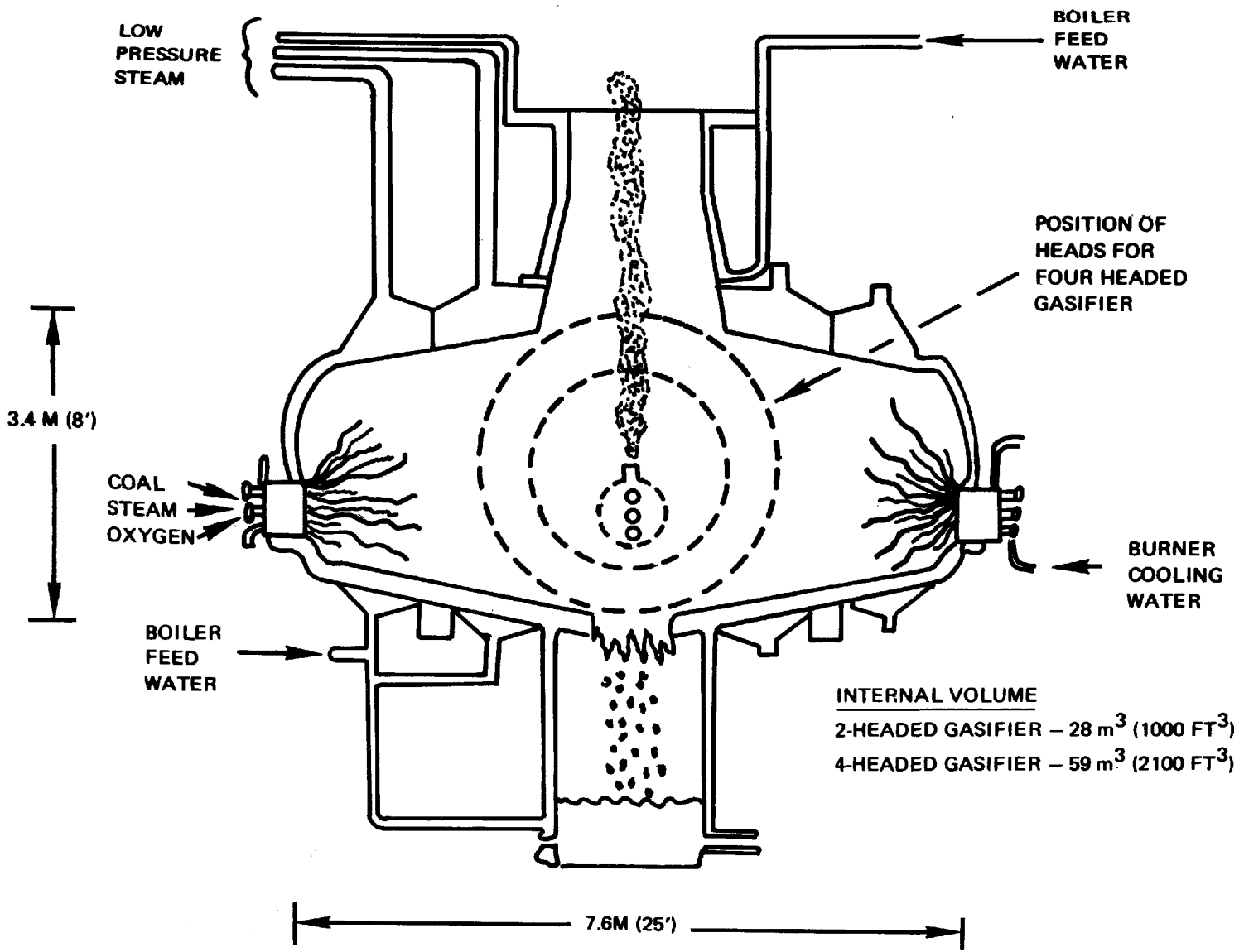

Figure A-24. Koppers-Totzek Gasifier[8]

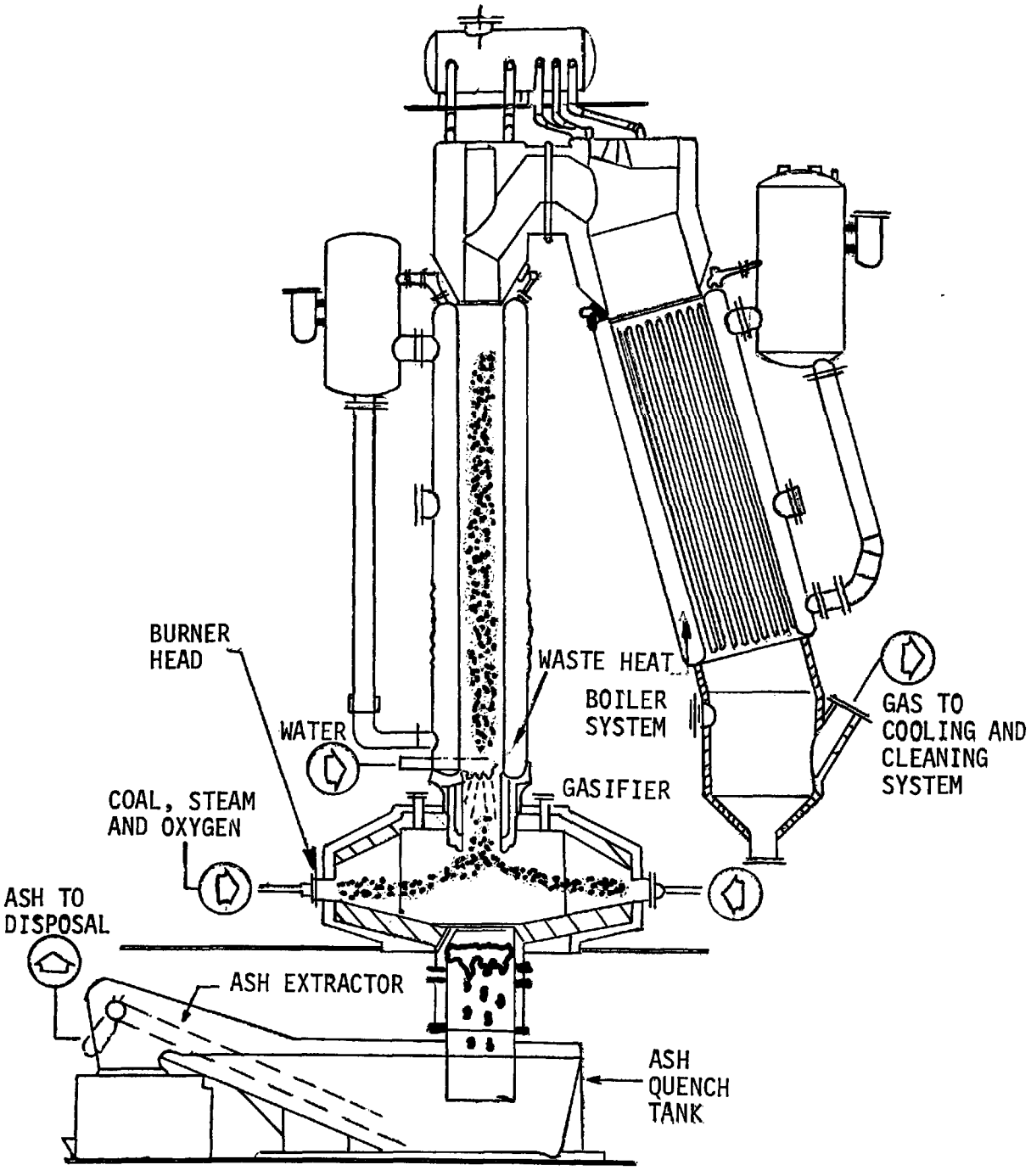

Figure A-25. Koppers-Totzek Gasifier with Ash Extractor and Waste Heat Boiler[1]

- Heat transfer and cooling mechanism: Direct gas/solid heat transfer; the gasifier is water jacketed to provide gasifier cooling and generate low pressure steam.

- Coal feeding mechanism: continuous screw conveyor feeds the pulverized coal to mixing nozzles at the ends of the gasifier heads; the coal is entrained in a pre-mixed stream of steam and oxygen and the mixture is injected into the gasifier through sets of two adjacent nozzles. Injection speeds are higher than speed of flame propagation to prevent flashback.

- Gasification media introduction: continuous injection of steam plus oxygen, with entrained coal feed.

- Ash removal mechanism[8]: approximately 50% of the ash flows down the gasifier walls as molten slag and drains into a slag quench tank where circulating water causes it to shatter into a granular form; a conveyor lifts the slag granules out of the quench tank (see Figure A-24). The remainder of the ash leaves the gasifier as fine particles entrained in the exit gas. The particles are solidified at the gasifier exit by water sprays. After treating the gas for heat recovery, particulate matter is removed by a washer cooler and disintegrator scrubber. The slag is subsequently separated from the scrubber water as a sludge by a clarifier.

- Special features[2,4,5]:

  - water sprays at gasifier exit and in the washer cooler system solidify entrained ash particles for collection by the scrubbing system

  - screw feeding system provides for continuous coal feeding

  - slag produced in the quench tank is granular, allowing for belt conveyor transport

  - opposing burners provide for:

    high turbulence and mixing

    continuous ignition should one burner become temporarily blocked

directing the flue into center of gasifier, thus minimizing hot spots in refractory lining

particles which pass through one flame region unreacted are gasified in the opposing flame

Operating Parameters

- Gas outlet temperature: 1750°K-1780°K (2700°F-2750°F)[1]
- Coal bed temperature: 3280-3410°K (3300-3500°F)[1]
- Gasifier pressure: 0.1 MPa (1 atm)[1]
- Coal residence time in gasifier: a few seconds[4]

Raw Material Requirements

- Coal:

  Type - essentially all types with ash contents up to 40%[2]

  Size - 70% less than 200 mesh (0.074 mm)

  Rate - two headed gasifiers handle up to 360 tonnes/day (400 tons/day); four headed gasifiers handle up to 770 tonnes/day (850 tons/day)

  Pretreatment - pulverizing and drying to about 2% moisture for bituminous coals and 8% moisture for lignites[3,5]. For coals with high ash fusion temperature, fluxing agents such as lime, silica, or soda ash are added to lower ash fusion temperature below gasifier operating temperature.

- Typical Steam and Oxygen Requirements:

Coal Type	Kg steam/ Kg coal	Kg O_2/ Kg coal	Ref. #
Montana lignite	0.14	0.73	5
Illinois bituminous	0.41	0.86	5
Eastern bituminous	0.41	0.85	5
Wyoming subbituminous	0.14	0.65	6
Ill. high volatile bituminous	0.27	0.70	6

Coal Type	kg steam/ kg coal	kg O_2/ kg coal	Ref. #
Eastern high volatile bituminous	0.29	0.82	6
South African bituminous	0.30	0.79	7

By-Products[8], based on Illinois Bituminous Coal Feed

	Pressure MPa (psig)	Temp °C(°F)	Kg steam/ Kg coal
Jacket steam	0.37 (55)	141 (287)	0.2
Waste heat boiler steam	6.1 (900)	480 (900)	1.3

Utility Requirements

- Make-up feed water[8], based on Illinois bituminous coal feed):

  Gasifier jacket 0.21 kg/kg coal (used to supply about 90% of steam for gasification)

  Waste heat boiler 0.66 kg/kg coal (assumes 4.6% blowdown)

- Cooling water: ?
- Electricity[12] (typical facility including oxygen plant and coal preparation): 0.25 kwh/kg of coal (0.116 kwh/lb)

Process Efficiency

- Cold gas efficiency:

$$= \frac{\text{[Product gas energy output]}}{\text{[Coal energy input]}} \times 100$$

= 71%, based on Illinois bituminous coal[8]

- Overall thermal efficiency:

$$= \frac{[\text{Total energy output (product gas + by-products + steam)}]}{[\text{Total energy input (coal + electric power)}]} \times 100$$

= 68%, based on Eastern bituminous coal (1447 kcal/kg or 12,640 Btu/lb), quenched and cooled product gas, and reference temperature 300°K (80°F)[1]

Expected Turndown Ratio[3]

$$= \frac{[\text{Full capacity output}]}{[\text{Minimum suitable output}]}$$

= 100/60 for two-headed gasifier,
100/30 for four-headed gasifier

Gas Production Rate[6]

Coal Type	Dry Nm^3/kg	Dry scf/lb
Montana subbituminous	1.53	(25.9)
Illinois bituminous	1.75	(29.7)
Eastern U.S. bituminous	2.02	(34.2)

2.1.2 Coal Feed/Pretreatment - Coal is dried to 2% - 8% moisture, depending on rank, and crushed to about 70% passing 200 mesh. Coal is conveyed with nitrogen to gasifier service bins which supply the screw feeding system. Screw feeders continuously discharge coal into a mixing head where it is entrained in oxygen and low pressure stream and delivered through transfer pipes to the burner head of the gasifier.

2.1.3 Quench and Dust Removal[8] - Product gas is sprayed with water at the exit of the gasifier to solidify molten entrained particulates and prevent their adherence to waste heat boiler tubes. Radiant surface boiler followed by a fire-tube boiler cool the gas to about 1600°F. Bulk particulates are then removed by water sprays in a venturi scrubber/washer cooler. Finer particulates are removed in a Theisen disintegrator and a mist eliminator.

3.0 Process Economics[9]

Basis:

- 15 four-headed gasifiers with capacity of 8820 tonnes/day (9700 tons/ /day) producing 1.26×10^7 Nm^3/day (3.7×10^8 scfd) of gas at 1.2 MPa 170 psig). Heating value of gas is 2810 kcal/Nm^3 (300 Btu/scf).

- Includes coal preparation and gas cleaning facilities as depicted in Figure 1.

Capital - 454 million dollars (1976)

Annual Operating Costs - 95 million dollars/year

4.0 Process Advantages

- Gasifier can accept all types of coal.

- The absence of tars, oils, naphthas and phenols in the raw gas and quench waters simplifies by-product recovery and pollution control technology requirements.

- Gasifiers can be started in 30 minutes, can be shut down instantly, and restarted in 10 minutes[3].

- Gasifier uses pulverized coal; no unusable fines are generated during crushing.

- Gasifiers have been operated commercially for many years and have shown high reliability and low maintenance requirements.

5.0 Process Limitations

- High temperature of exit gases and slag requires heat recovery in order to maintain satisfactory thermal efficiency.

- Low operating pressure is a disadvantage for transmission of the product gas or utilization in combined-cycle applications.

- Relatively high particulate loadings after quench requires further processing for many applications.

- Low H_2/CO ratio in product gas requires extensive shift and CO_2 removal for methanation or for use in ammonia and methanol synthesis.

6.0 Input Streams (see Figure A-23)

6.1 Coal - Stream 1 (Table A-67)

6.2 Low Pressure Steam - Stream 2 (see section 2.1.2 for quantities)

6.3 Oxygen - Stream 3 (see section 2.1.2 for quantities)

7.0 Intermediate Streams (see Figure A-23)

7.1 Cooled Product Gas - Stream 5 (Table A-68)

7.2 Slag Quench Tank Blowdown (Stream 7) (Table A-69)

7.3 Washer Cooler Blowdown (Stream 6) (Table A-69)

7.4 Mist Eliminator Blowdown (Stream 8) (Table A-69)

7.5 Combined Flow to Clarifier (Stream 10) (Table A-69)

8.0 Discharge Streams (see Figure A-23)

8.1 Quenched Product Gas (Stream 9)

composition - expected to be similar to that reported in Table A-68. Washing operation removes unknown amounts of NH_3, HCN, H_2S, COS and SO_2.

particulates - 9.5 mg/Nm^3[3]; 63 mg/Nm^3[7]

8.2 Clarifier Effluent (Stream 12) (Table A-69)

8.3 Slag (Stream 4) - Composition should be similar to that of coal ash. Limited data available from actual operations.

8.4 Clarifier Sludge (Stream 11) - The solids contained in this stream are a combination of slag particulates from the slag quench tank and ash particulates from the gas quench/washing systems. Very limited data are available on the composition of clarifier sludge. Composition of the solids should reflect coal ash composition (Table A-67) and degree of carbon conversion in the gasifier (Table A-68). Metallic elements in clarifier solids based on Turkish lignite feed are listed below[11].

TABLE A-67. PROPERTIES OF SOME COALS WHICH HAVE BEEN USED IN KOPPERS-TOTZEK GASIFIERS - STREAM 1

Coal Type Coal Origin (Reference)	Lignite Turkey (2)	Lignite Montana (3)	Subbituminous Montana (6)	Bituminous Illinois (6)	Bituminous Illinois (8)	Bituminous --- (3)	Bituminous South Africa (7)
Dry HHV (kcal/kg) (Btu/lb)	--	1151 (10050)	1154 (9983)	1304 (11390)	--	1447 (12640)	1234 (10780)
Dry LHV (kcal/kg) (Btu/lb)	--	--	--	--	1294 (11310)	--	--
Size	70% <200 mesh						70% <200 mesh
Coal Composition (%)							
C	39.9	58.12	56.76	61.94	62.98	69.88	68.2
H	3.27	4.3	4.24	4.36	4.23	4.90	4.3
N	1.36	1.1	1.01	0.97	1.22	1.37	1.7
S	0.95	1.5	0.67	4.88	4.23	1.08	1.6
O	19.2	14.2	13.18	6.73	7.90	7.05	9.9
Ash	32.3	12.7	22.14	19.12	13.63	13.72	14.5
Moisture	7	8.0	2.0	2.0	6.0	2.0	1.0
Totals	104	100	100	100	100	100	101.2
Ash Composition (%)							
SiO_2	48.14	--	--	--	41.7	--	--
Al_2O_3	13.71	--	--	--	19.8	--	--
CaO	6.73	--	--	--	6.8	--	--
MgO	6.23	--	--	--	1.0	--	--
Fe_2O_3	16.29	--	--	--	21.2	--	--
SO_3	8.18	--	--	--	--	--	--
Totals	99.28	--	--	--	90.5	--	--

TABLE A-68. PROPERTIES OF KOPPERS-TOTZEK RAW PRODUCT GAS - STREAM 5

Coal Type (Reference)	Lignite (2)	Lignite (3)	Subbituminous (6)	Bituminous (6)	Bituminous (8)	Bituminous (3)	Bituminous (7)
Dry Composition (%)							
CO	58.4	56.87	58.68	55.38	57.35	52.8	56.0
H_2	26.1	31.3	32.86	34.62	32.74	35.5	30.0
CH_4	--	--	--	--	--	0.11	0.1
C_2+	--	--	--	--	--	--	<.01
CO_2	12.5	10.0	7.04	7.04	7.05	10.1	11.7
N_2+Ar	2.2	1.2	1.12	1.01	1.16	0.87	0.15
H_2S	0.5	0.6	0.28	1.83	1.59	0.32	0.52
COS	--	0.5	0.02	0.12	0.114	0.025	0.074
CS_2	--	--	--	--	--	--	--
R-SH	--	--	--	--	--	--	--
SO_2	--	--	--	--	--	0.0031	0.0002
NH_3	--	--	--	--	--	0.24	0.0090
HCN	--	--	--	--	--	0.0407	0.004
NO_x	--	--	--	--	--	0.0010	0.0006
Totals	100	100	100	100	100	100	99
Moisture	--	--	--	--	9.48	29.2	5.58
HHV dry-(kcal/Nm^3) (Btu/scf)	--	2705(289)	2762(295)	2716(290)	--	2678(286)	--
LHV dry-(kcal/Nm^3) (Btu/scf)	--	--	--	--	2575(275)	--	--
Dry Gas Production Nm^3/kg(scf/lb)	1.35(22.8)	1.62(27.4)	1.52(25.9)	1.75(29.7)	1.80(30.4)	1.91(32.4)	1.57(26.5)
Particulates (wet) grams/Nm^3(grains/scf)	--	--	--	--	52(22)	27(11)	97(40)
Particulate Composition (%)							
SiO_2	--	--	--	--	30.5	--	--
Al_2O_3	--	--	--	--	14.48	--	--
CaO	--	--	--	--	4.97	--	--
MgO	--	--	--	--	0.73	--	--
Fe_2O_3	--	--	--	--	15.51	--	17
Carbon	--	--	--	--	33.8	--	--

TABLE A-69. KOPPERS-TOTZEK LIQUID PROCESS AND DISCHARGE STREAMS

Stream Number (Reference)	Stream 10 (10)	Stream 10 (3)	Stream 8 (3)	Stream 6 (3)	Stream 7 (3)	Stream 12 (3)	Stream 12 (8)
Coal Type Coal Origin	Lignite Turkey	Bituminous S. Africa	Lignite Turkey	Lignite Turkey	Lignite Turkey	Lignite Turkey	Bituminous S. Africa
Stream Parameter ‡							
TSS	3072	--	278	5084	4612	50	--
TDS	706	2769	606	940	812	724	--
COD	16	--	18	128	18	63	--
Alkalinity†	--	--	--	--	--	--	--
Total Hardness†	--	681	--	--	--	--	--
Conductivity ($\frac{\mu mho}{cm}$)	1800	--	970	2000	1800	2400	--
pH	8.8	8.9	7.5	7.5	8.8	8.9	--
Stream Composition**							
Ca^{++}	96	177	60	55	71	127	--
Mg^{++}	10	55	60	114	95	80	--
Na^{+}	18	408	18	18	18	18	--
K^{+}	8	--	7	10	9	8	--
Zn^{++}	0.02	0.02	0.03	0.02	0.03	0.02	--
Fe^{++}	0.2	0.2	0.26	2.0	0.22	.64	--
Cu^{++}	0.01	<0.01	0.06	0.01	0.01	0.06	--
NH_4^+	137	15	25	184	157	122	15
NO_2^-	0.24	6.2	5.3	4.5	0.13	4.4	--
NO_3^-	25	488*	34	3.7	3.3	23	--
Total $PO_4^{\equiv}$	0.8	--	1.7	1.2	0.81	2.7	--
Cl^-	57	284	53	96	85	46	--
$SO_4^{=}$	255	342	147	155	216	109	--
CN^-	1.4	<0.01	7.0	12.5	0.52	14	1
SiO_2	20	69	31	15	16	43	--
$S^{=}$	Not Detected	Not Detected	Not Detected	Not Detected	Not Detected	Not Detected	Not Detected
As, Br, Cr, F	--	Not Detected	--	--	--	--	--

*High NO_3^- partially reflects NO_3^- contained in raw make-up water.

†As $CaCO_3$

‡mg/l except pH and conductivity

Element	Percent of Dry Clarifier Solids
Fe	6.8 - 8.4
Ni	0.22 - 44
Cu	0 - 0.05
Mn	0.028 - 0.069

9.0 Data Gaps and Limitations

Limitations of the data for the K-T process relate primarily to the specific properties of input, intermediate, and waste streams. These limitations include the following:

- Feed coals - limited data on ash and trace element composition of coals which have been gasified in K-T gasifiers.
- Raw and cleaned product gas - limited data on trace sulfur and nitrogen compounds (CS_2, R-SH, SO_2, NH_3, HCN, NO_x). No trace element data for cleaned gas.
- Clarifier effluent and sludge - some data is available for these streams from the gasification of Turkish lignite. Parameters/constituents such as TOC, phenols, oil and grease, SCN^-, and various trace elements are not included. No data for these streams from gasification of American coals are available.
- Quench tank slag - no data are available on carbonaceous material or trace elements contained in gasifier slag. The leachability of organics and trace elements from such slags is also essentially unknown.

10.0 Related Programs[12]

Although no K-T gasifiers are currently operating in the U.S., DOE has recently awarded a contract to Air Products and Chemicals, Inc. of Allentown, Pa. for design, construction and operation of a Koppers-Totzek facility to produce hydrogen from coal for industrial use. The demonstration facility, possibly to be located at Cedar Bayou, Texas, would use Texas lignite as feed.

No programs specifically aimed at environmental assessment of K-T operations are known to be under way at present.

REFERENCES

1. Handbook of Gasifiers and Gas Treatment Systems, ERDA document No. FE-1772-11, Dravo Corp., February 1976.

2. Wintrell, R., The K-T Process: Koppers Commercially Proven Coal and Multi-fuel Gasifier for Systematic Gas Production in the Chemical and Fertilizer Industries, 78th National AIChE Meeting, Salt Lake City, Utah, August 1974.

3. Farnsworth, J. F., et al, Clean Environment with K-T Process, presented at the EPA Symposium on Environmental Aspects of Fuel Conversion Technology, St. Louis, Missouri, May 13-16, 1974.

4. Gas Processing Handbook, Hydrocarbon Processing, Vol. 54, No. 3, April 1975.

5. Farnsworth, J. F., Application of the K-T Coal Gasification Process in the Steel Industry, 104th Annual AIME Meeting, February 16-20, 1975.

6. Information provided by Koppers Company, 1977.

7. Sharpe, R. A., Gasify Coal for Syn Gas, Hydrocarbon Processing, Vol. 55, No. 11, November 1976.

8. Farnsworth, J. R., et al, K-T: Koppers Commercially Proven Coal and Multi-Fuel Gasifier, Association of Iron and Steel Engineers Annual Convention, Philadelphia, Pa., April 22-24, 1974.

9. Mitsak, D. M., et al, Koppers-Totzek - Economics and Inflation, 3rd International Conference on Coal Gasification and Liquefaction, Pittsburgh, Pa., August 3-5, 1976.

10. Mitsak, D. M. and Kamody, J. F., Koppers-Totzek: Take a Long Hard Look, 2nd Symposium on Coal Gasification, Liquefaction, and Utilization, Pittsburgh, Pa., August 5-7, 1975.

11. Information provided by South African Coal, Oil and Gas Corp. Ltd., to EPA's Industrial Environmental Research Laboratory, Research Triangle Park, No. Carolina, November 1974.

12. Caution Marks Progress in Coal-Conversion Plan, Chemical Engineering, October 10, 1977, p. 77.

TEXACO PROCESS

1.0 General Information[1]

1.1 Operating Principles - High pressure, high temperature gasification of coal entrained in oxygen and steam, with co-current gas/solids flow.

1.2 Development Status - Since 1953, the Texaco process has been in commercial use for the production of synthesis gas from petroleum feedstocks and is currently used in approximately 70 plants in over 20 countries[1,2]. The application of the process to coal is currently at the pilot plant stage. However, there are plans to convert an existing European oil gasification plant to the Texaco coal gasification process; scheduled start-up of the plant is late 1977[2]. ERDA has also recently awarded a contract to W. R. Grace for conceptual design of an 1,800 tonne per day (2,000 TPD) synthesis gas demonstration plant for the production of 1,088 tonne per day (1,200 TPD) ammonia from high sulfur agglomerating coal[6,12,21]. Minnkota Power Cooperative, Inc. of Grand Forks, No. Dakota and Northern States Power Company, Minneapolis, Minn., have also recently circulated a proposal to collectively undertake a feasibility study of a lignite-fueled methanol plant to be located in western North Dakota[13,18]. The Louisiana Municipal Power Company (LAMPCO) has recently proposed construction of a facility at Baldwin, La. to produce 1.25 kcal/SCM (150 Btu/scf) gas from bituminous coal and residual oil for power generation[14]. (See Table A-63.) Recently, the Tennessee Valley Authority has awarded a contract to design and construct a Texaco gasifier to produce synthesis gas for ammonia production[22]. Southern California Edison Company has announced that it will test the coal gasification/combined cycle process using a Texaco gasifier at a utility station near Barstow, California[26].

TABLE A-70. DEVELOPMENT STATUS OF TEXACO COAL GASIFICATION PROCESS

Facility	Operator	Location	Capacity	Status/Miscellaneous
Pilot Plant[1]	Texaco	Montebello Research Laboratory Montebello, California	13.6 tonne per day (15 TPD); Single Train	In operation since 19 ? - present.
Pilot Plant (1,3,5,11,17)	Texaco (?) (Olin-Mathieson)	Morgantown, W. Va.	90.7 tonne per day (100 TPD)	Operational from 1956-58
Planned Commercial[2]*	?	Germany (?)	144 tonne per day (159 TPD)	Scheduled for start-up in late 1977
Planned Commercial[6,12,21] (demonstration)	W. R. Grace & Co. (ERDA-sponsored)	Probably western Kentucky	Plant would utilize 1,800 tonne per day (2,000 TPD) of high sulfur agglomerating coal for production of 1,088 tonne per day (1,200 TPD) ammonia	Phase 1, conceptual design, was awarded by ERDA in August 1977. Phase II, construction and operation, is expected to be completed in 1981. Project cost estimated at $320 million.
Planned Demonstration	Tennessee Valley Authority	Muscle Shoals, Alabama	153 tonnes/day (168 tons/day)	Contract for engineers and construction awarded June, 1978.
Planned Commercial[13,18]	Minnkota Power Cooperative, Inc.	Western No. Dakota	Plant would utilize 22,700 tonne per day (25,000 TPD) coal for production of 2.4 million liters (7.5 million gals) of methanol per day.	Proposal for feasibility study issued mid-1977
Planned Commercial[14]	Louisiana Municipal	Baldwin, Louisiana	Plant would produce 1.25 Kcal/SCM (140 Btu/SCF) gas from bituminous coal and residual oil for power generation.	Economic and engineering studies are completed. Project cost estimated $62 million.
Planned Commercial[26]	Southern California	Barstow, California	Plant would produce fuel gas for a 90 MW gas turbine/30 MW stream turbine electric generator	Preliminary engineering work is underway

*At the present time, two European companies are converting an existing gasification plant to the Texaco coal gasification process at this site. (2)

1.3 Licensor/Developer - Texaco Development Corporation
135 East 42nd Street
New York, N. Y. 10017

1.4 Commercial Applications - The Texaco process has been in commercial use for the production of synthesis gas from petroleum feed since 1953. There is no present commercial application to coal. Proposed commercial-scale developments have been discussed in Section 1.2 above.

2.0 Process Information

2.1 Pilot Plant (See Figure A-26, Flow Diagram)

- Ground coal is slurried with water (or oil) and the slurry is pumped to the gasifier. Steam (as optional moderator) and oxygen (or air) are injected into the gasifier to effect partial oxidation of the coal, with relative steam, oxygen and slurry rates chosen to control gasification temperature. Gasifier products exiting the outlet at the bottom of the gasifier are cooled to solidify slag, and the product gas proceeds to an external water cooler (knockout pot) where ungasified solids are removed.* Water and entrained solids from the gasifier and the knockout pot are continuously removed to a soot-water clarifier. Slag is periodically removed from the bottom of the gasifier via a lockhopper system and is separated from water by screens and a clarifier for disposal; the aqueous phase proceeds to a slag fines clarifier. The settled solids from the slag fines clarifier and the soot water clarifier are recycled to the process or wasted. Clarified waters from the two clarifiers are recycled to the gasifier or slurry tank or wasted (after depressurization).

2.1.1 Gasifier (see Figure A-27)

- Construction: vertical, cylindical pressure vessel with carbon steel shell. The top section where gasification occurs, is refractory lined. The lower section (slag quench chamber) which contains a reservoir of water for quenching of gas, is unlined steel(1).

- Dimensions: 1.5m (5 ft) outside shell diameter and 6m (20 ft) height(2).

*Direct quenching employed at the Texaco Montebello pilot plant would be replaced by gas cooler/heat recovery for applications such as power generation where recovery of high pressure steam is necessary for overall process economics.

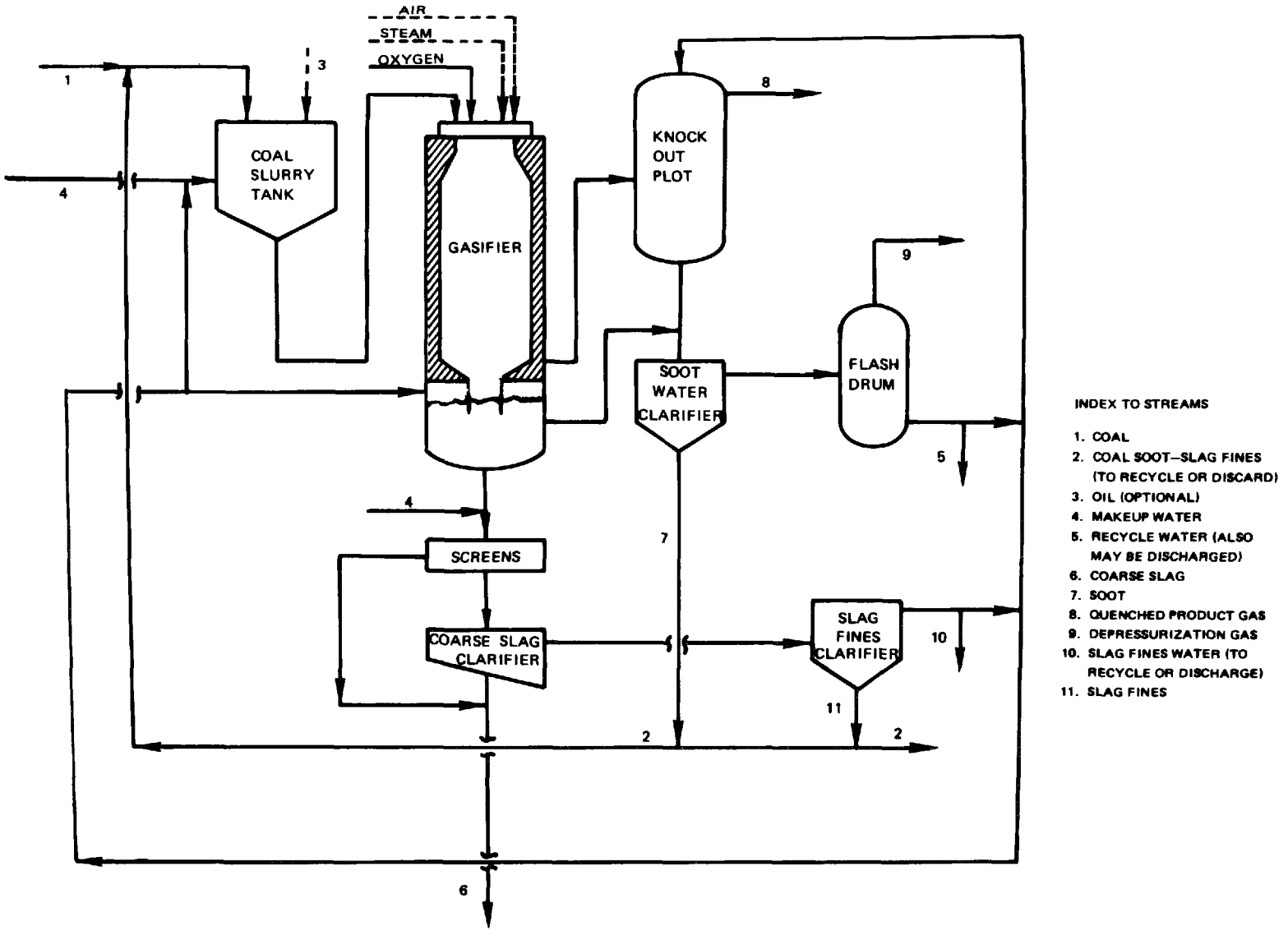

Figure A-26. Process Flow Diagram for Texaco Coal Gasification Pilot Plant at Montebello, California[25]

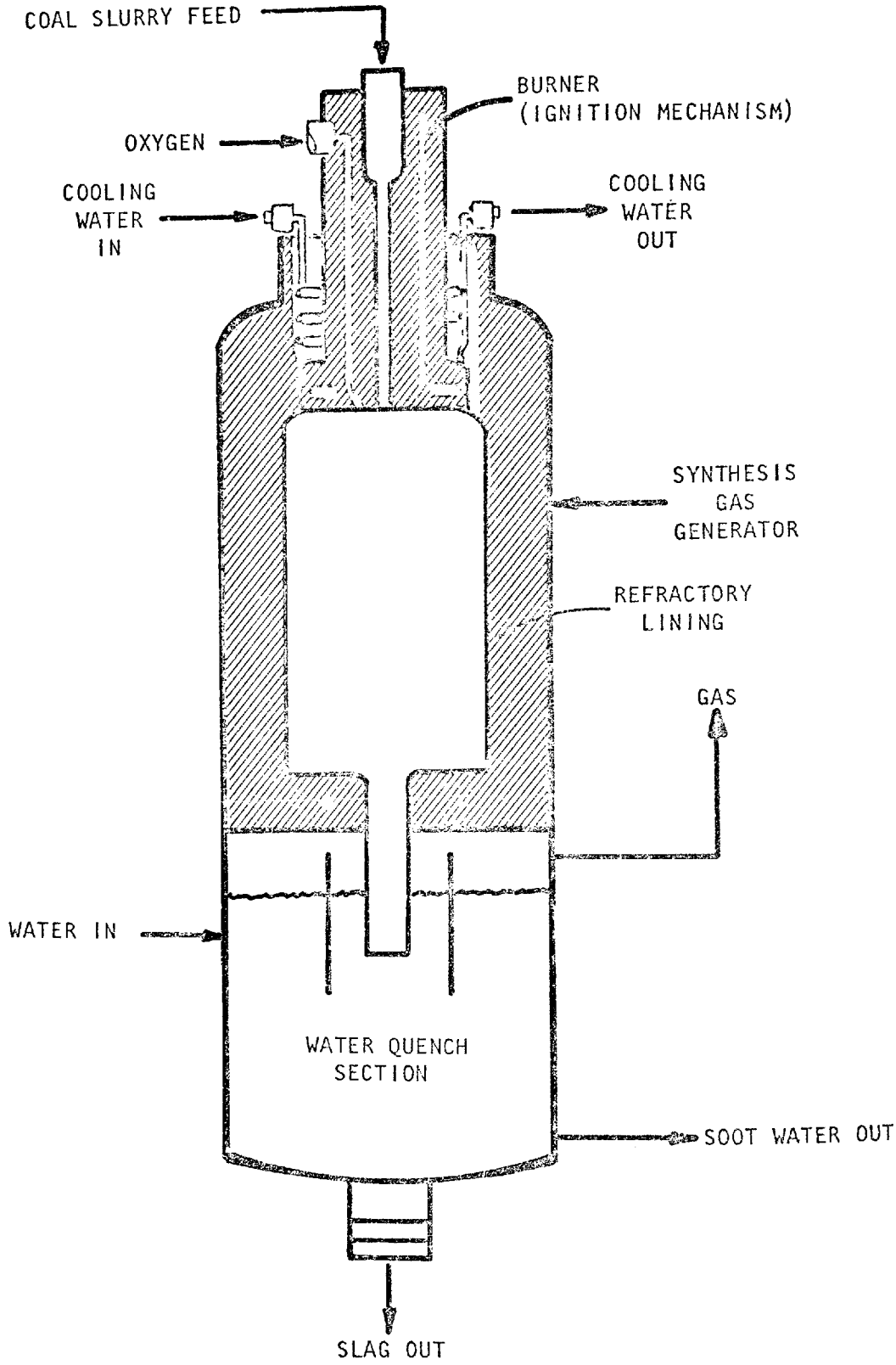

Figure A-27. Texaco Gasifier[5]

- Bed type and gas flow: entrained bed; continuous co-current downward gas/solid flow; lateral gas outlet near the middle of the unit, at the top of the slag quench chamber[1,2].

- Heat transfer and cooling mechanism: direct gas/solids heat transfer. Water jacket at the top of the gasifier provides cooling for the burner nozzles[5].

- Coal feeding mechanism: continuous injection of coal and steam (supplied by water in the slurry feed) tangentially or axially near the top of the gasifier through a water-cooled burner nozzle[4]*.

- Gasification media introduction: continuous feeding of preheated oxygen through a separate water-cooled burner nozzle tangentially or axially near the top of the gasifier[4].

- Ash removal mechanism: molten ash flows through an opening at the bottom of the gasifier burner section into the slag quench chamber. The quenched slag is discharged from the bottom of the quench chamber through lockhoppers[19]. The water used for quenching is sent to a clarifier for removal of suspended solids.

- Special features: gas quenching and cooling, as well as slag removal, are accomplished simultaneously in the slag quench chamber. The coal/water feeding mechanism eliminates any moisture content restrictions for coal feed.

Operating Parameters

- Gas outlet temperature: 478°K to 533°K (400°F to 500°F)[1]

- Internal gasifier ("reaction zone") temperature: 1370°K to 1640°K (2000°F-2500°F)[9,20]

- Gasifier pressures: 2.4 - 8.2 MPa (350 to 1200 psig)[1,20]

- Coal residence time in gasifier: a few seconds[4]

- Coal slurry solids loading: 48% - 66%[23]

*When petroleum or coal liquefaction residues are used as feedstock, the feedstock is pumped to the gasifier as a liquid; steam is fed into the gasifier separately rather than as a liquid/steam mixture.

Raw Materials Requirements

- Coal feed stock requirements

  Type - all types of coal (also, hydrocarbon-containing residuum, such as H-coal liquefaction residues)[1,2,10]

  Size - 70 percent less than 0.074 mm (0.003 in)[7,9]

  Rate - ~410 kg/sec-m^2 (300 lb/hr-ft^2) (Calculated from data in 1)

- Steam requirements: 0.1 to 0.6 kg/kg coal (ordinarily supplied by water in the coal slurry feed[7]. (0.24 to 0.43 kg/kg coal for Illinois #6 H-coal liquefaction residues; 0.25 to 0.32 kg/kg coal for Wyodak H-coal liquefaction residues)[19].*

- Oxygen requirements: 0.6 to 0.9 kg/kg coal[7]. (0.98 to 0.10 kg/kg coal for Illinois #6 H-coal liquefaction residues; 1.0 to 1.11 kg/kg coal for Wyodak H-coal liquefaction residues)[19].

Utility Requirements

- Boiler feed water: ?
- Cooling water: ?
- Electricity: ?

Process Efficiency

- Cold gas efficiency:

  = (product gas energy output/coal energy input) x 100

  = 66 - 73%[23]

  = 83 - 84% with H-coal liquefaction residues (Illinois #6 bituminous and Wyodak coals)[2,19]

- Overall thermal efficiency:

$$= \frac{\text{[Total energy output (product gas + HC byproducts + steam)]}}{\text{[Total energy input (coal + electric power)]}} \times 100$$

= ?

*When liquefaction residues are gasified, the feed is heated and pumped directly to the gasifier (a small quantity of light oil may be employed to clean lines). Steam is injected directly into the top of the gasifier.

Gas Production Rate/Yield

- 1.5 - 2.1 Nm^3/kg (26-36 SCF/lb)[1,2,3]
- (Approximately 2.2 - 2.5 Nm^3/kg (35-40 SCF/lb) for H-coal liquefaction residues)[2,19]

2.1.2 Coal Feed/Pretreatment[2,4,9] - A thickener is used to prepare a water slurry of coal containing 40% to 70% coal by weight. The slurry is then pumped through a heater where the mixture is heated to 823°K (1000°F) at a pressure of 1.5 MPa (225 psia). The steam to coal ratio is controlled by reducing excess steam through the use of a cyclone ahead of the gasifier.*

2.1.3 Quench and Dust Removal[2,5,9] - Molten slag is discharged into quench water in the lower half of the gasifier unit (slag quench chamber). The solidified slag is removed at the bottom of the gasifier through a lockhopper system. "Soot water," which contains dispersed soot and other suspended and dissolved matter, is drawn off near the bottom of the quench chamber and sent to a clarifier (see Figure A-34.)

2.2 Conceptual Commercial-Scale Design[1] - A typical commercial Texaco gasifier 2.7m (9 ft) O.D. and 5m (15 ft) high is projected to gasify 1,700 tonnes (1,900 tons/day) of coal to produce about 3MM SCM/day (100MM SCF/day) of medium-Btu gas at 4.5 MPa (650 psig).

3.0 Process Economics

A recent estimate of the capital cost of a Texaco gasifier producing fuel gas for combined cycle power generation has been made by EPRI[24] The plant investment for coal handling (9,090 tonnes/day or

*When petroleum or coal liquefaction residues are used as feedstock, the feedstock is pumped to the gasifier as a liquid. Steam is fed to the gasifier separately rather than as a liquid/steam mixture.

10,000 tons/day), oxidant feed, gasification, ash handling, and gas cooling sections of the conceptual facility is estimated at about $230,000,000 (mid-1976 dollars).

4.0 Process Advantages[1,2,4]

- All types of coals, chars, and many other organic materials can be gasified.
- Gasifier can be operated with either oxygen or air.
- Tars, oils, naphthas and phenols are present in the raw gas only in trace amounts, reducing downstream gas treatment requirements.
- Use of the water slurry feeding mechanism eliminates the need for coal drying and any restriction on coal moisture content.
- When the coal is slurried with water, grinding and pulverizing operations may be carried out in a wet mill, thus avoiding emissions and hazards associated with dry coal dust[4].
- The use of pulverized coal does not require rejection of coal fines from the feed, as is the case with some other processes.
- Gas quench and slag quench are conducted simultaneously in the bottom of the gasifier vessel.
- Essentially all coal carbon is gasified in the process[1].

5.0 Process Limitations

- High temperature of exit gases and slag slurry requires heat recovery for maintenance of satisfactory thermal efficiency.
- High carryover of slag particles in the raw product gas may lead to operating problems in the waste heat boiler.
- CO to H_2 ratio in product gas is about 1. Extensive shift is necessary prior to methanation or for ammonia or methanol synthesis.

6.0 Input Streams (see Figure A-26)

6.1 Coal (Stream No. 1) - See Table A-71.

6.2 Make-up Water for Slurry and Steam (Stream No. 4) - See Section 2.1.1

6.3 Oil (Stream 3) - Optional for use as purge when heavy liquefaction or petroleum residues are gasified.

TABLE A-71. PROPERTIES OF INPUT COAL (AND COAL RESIDUE) TO TEXACO GASIFIER

Property	Illinois #6 Bituminous Coal (1,16)	Eastern Coal (23)	Western Coal (23)	Illinois #6 H-Coal Liquefaction Residues (19,2)*,†		Wyodak H-Coal Liquefaction Residues (19,2)*,†	
				Run I-2	Run I-5c	Run W-6	Run W-7
Size	70% <0.074mm (0.003 in.)	--	--	--	--	--	--
Volatile matter, %	38.1	--	--	--	--	--	--
Moisture, %	3.7	--	--	--	--	--	--
Composition (dry), %							
C	65.0	72.7	74.6	73.1	71.2	78.3	79.7
H	4.9	5.03	5.31	5.8	5.4	5.8	5.6
N	1.2	1.4	1.0	0.73	0.76	0.9	0.9
S	3.6	3.0	0.46	1.37	1.74	0.06	0.01
Ash	13.7	8.7	7.2	16.8	18.6	10.4	9.0
O	11.6	9.1	11.5	1.7	2.0	4.6	4.8
Cl	--	--	--	0.5	0.3	.00	.00
Ash Composition, %				Average		Average	
SiO_2	--	--	--	46.9		31.4	
Al_2O_3	--	--	--	19.3		15.8	
Fe_2O_3	--	--	--	18.9		5.83	
TiO_2	--	--	--	0.91		0.86	
P_2O_5	--	--	--	0.15		1.63	
CaO	--	--	--	4.33		23.83	
MgO	--	--	--	1.16		5.79	
Na_2O	--	--	--	1.29		2.26	
K_2O	--	--	--	1.98		0.27	
B_2O_3	--	--	--	0.15		0.13	
SO_3	--	--	--	3.67		7.38	
HHV-kcal/Kg(Btu/lb)	7,305 (13,150)	7,027 (12,650)	7,297 (13,134)	7,746 (13,943)	7,453 (13,416)	8,042 (14,476)	8,108 (14,594)

*Includes aromatic purge solvent.

†A total of 17 runs were performed using Illinois #6 H-coal liquefaction residues, and a total of 8 runs were performed using Wyodak H-coal liquefaction residues. Runs I-2, I-5c, W-6 and W-7 represent the extremes of slag and soot production obtained under different input rates (gasification temperatures). Oxygen input rates were as follows: 0.56 SCM/kg (9.1 SCF/lb) for Run I-2; 0.61 SCM/kg (9.9 SCF/lb) for Run I-5c; 0.62 SCM/kg (10.1 SCF/lb) for Run W-6; and 0.68 SCM/kg (11.1 SCF/lb) for Run W-7.

7.0 Intermediate/Discharge Streams (see Figure A-26)

7.1 Quenched Product Gas (Stream 8) - See Table A-72

7.2 Recycle Water (Stream 5) - No data available

7.3 Coal Soot-Slag Fires (Stream 2) - See Table A-73 for soot and slag production rates and carbon contents associated with the gasification of H-coal liquefaction residues. No data are available for soot and slag from coal gasification.

7.4 Coarse Slag (Stream 6) - No data available for coal gasification; see Table A-73 for properties of coarse slag from gasification of H-coal liquefaction residues.

7.5 Soot (Stream 7) - No data available for coal gasification; see Table 4 for properties of soot from gasification of H-coal liquefaction residues.

7.6 Slag Fines Water (Stream 10) - No data available

7.7 Slag Fines (Stream 11) - No data available for coal gasification; see Table A-73 for properties of fine slag from gasification of H-coal liquefaction residues.

7.8 Depressurization Offgas (Stream 9) - No data available

8.0 Data Gaps and Limitations

Limited data are available to provide an accurate and complete description of the Texaco process. Data gaps currently exist in the characterization of most of the gaseous, liquid and solid streams generated in Texaco pilot operations using coal feed (see Section 7). Also, limited data are available on the characteristics of the waste streams from gasification of liquefaction residues.

9.0 Related Programs

The Electric Power Research Institute and Texaco, Inc. are sponsoring a program for determination of the performance of the Texaco gasifier for fuel production for combined cycle electric power generation. A major objective of the program is the characterization of certain emissions generated by the process by means of environmental sampling and analysis[25].

TABLE A-72. TEXACO PRODUCT GAS PROPERTIES AND PRODUCTION RATES FOR COAL (AND COAL RESIDUES) (STREAM NO. 12)

Dry Composition (Vol %)	Illinois #6 Bituminous Coal (1)	Eastern Coal (23)	Western Coal (23)	Illinois #6 H-Coal Liquefaction Residues (2, 19)*		Wyodak H-Coal Liquefaction Residues (2,19)*	
				Run I-2	Run I-5c	Run W-6	Run W-7
CO	37.6	44.6	50.7	53.1	51.4	39.2	38.0
H_2	39.0	36.2	35.8	41.0	39.9	54.9	54.2
CH_4	0.5	0.4	0.09	0.5	0.06	0.2	0.02
CO_2	20.8	20.6	13.1	5.2	8.2	0.5	7.6
N_2 + Ar	0.6	0.4	0.2	0.07	0.04	0.18	0.11
O_2	--	--	--	--	--	--	--
H_2S	1.5	0.8	0.02	0.20	0.40	0.00	0.00
COS	--	0.05	0.01	0.01	0.01	0.00	0.00
HHV-kcal/SCM (Btu/SCF)	2250 (253)	2283 (271)	2488 (295)	2740† (308)	2610† (294)	2710† (305)	2740† (308)
Production Rate SCM/kg (SCF/lb)	1.5 (26)	1.95 (33)	2.13 (36)	2.1 (35)	2.2 (37)	2.4 (40)	2.4 (40)

*A total of 17 runs were performed using Illinois #6 H-coal liquefaction residues, and a total of 8 runs were performed using Wyodak H-coal liquefaction residues. Runs 1-2, 1-5c, W-6 and W-7 represent the extremes of slag and soot production obtained under different oxygen input rates (gasification temperatures). Oxygen input rates were as follows: 0.56 SCM/kg (9.1 SCF/lb) for Run 1-2; 0.61 SCM/kg (9.9 SCF/lb) for Run 1-5c; 0.62 SCM/kg (10.1 SCF/lb) for Run W-6; and 0.68 SCM/kg (11.1 SCF/lb) for Run W-7.

†Calculated from composition.

TABLE A-73. PRODUCTION RATES AND CARBON CONTENTS OF SLAG AND SOOT FOR TEXACO GASIFICATION OF H-COAL LIQUEFACTION RESIDUES

Gasification Residue	Feed*			
	Ill. #6 H-Coal Residue[19]		Wyodak H-Coal Residue[19]	
	Run I-2	Run I-5c	Run W-6	Run W-7
Coarse Slag (Stream 6)				
Carbon (wt %)	12.6	<0.50	0.5	0.45
Production Rate (dry kg/kg feed)	0.023	0.055	0.005	0.07
Fine Slag (Stream 11)				
Carbon (wt %)	31.3	2.50	8.4	7.4
Production Rate (dry kg/kg feed)	0.10	0.12	0.044	0.005
Soot (Stream 7)				
Carbon (wt %)	31.3	16.76	17.7	12.7
Production Rate (dry kg/kg feed)	0.145	0.029	0.072	0.017

*A total of 17 runs were performed using Illinois #6 H-coal liquefaction residues, and a total of 8 runs were performed using Wyodak H-coal liquefaction residues. Runs I-2, I-5c, W-6 and W-7 represent the extremes of slag and soot production obtained under different oxygen input rates (gasification temperatures). Oxygen input rates were as follows: 0.56 SCM/kg (9.1 SCF/lb) for Run I-2; 0.61 SCM/kg (9.9 SCF/lb) for Run I-5c; 0.62 SCM/kg (10.1 SCF/lb) for Run W-6; and 0.68 SCM/kg (11.1 SCF/lb) for Run W-7).

REFERENCES

1. Dravo Corporation, Handbook of Gasifiers and Gas Treatment Systems, ERDA FE-1772-11, Washington, D. C., February 1976, p. 25-26.

2. Texaco Reports Results of Gasification Tests on H-Coal Residue, Synthetic Fuels Quarterly Report, Cameron Engineers, Inc., Denver, Colorado, 14 (2): p. 4-34 to 4-40, June 1977.

3. Hall, E. H., et al, Fuels Technology: A State-of-the-Art Review, NTIS No. PB-242 535, U.S. Environmental Protection Agency, Washington, D. C., April 1975, p. 5-72 through 5-73; p. 5-93 through 5-95.

4. Eastman, D., Preliminary Report on Coal Gasification, presented at Annual Meeting of the American Institute of Mining and Metallurgical Engineers, New York, February 1952, 7 p.

5. Conn, A. L., Sulfur Developments: Low Btu Gas for Power Plants, Chemical Eng. Prog., 69 (12): 56-61, 1973.

6. An Ammonia-from-Coal Demonstration Plant Proposal, Chemical Eng., 84 (19): 87, 1977.

7. Hahn, O. J., Present Status of Low-Btu Gasification Technology, Institute for Mining and Minerals Research, University of Kentucky, Lexington, Kentucky, January, 1976.

8. Hoy, H. R. and D. M. Wilkins, Total Gasification of Coal, Brit. Coal Utility Research Association Monthly Bulletin, 22: 57-110, 1958.

9. Katz, D. L. et al, Evaluation of Coal Conversion Processes to Provide Clean Fuels, Final Report, EPRI 206-0-0, PB-234 202 and PB-234 203, University of Michigan, College of Engineering, Ann Arbor, Michigan, 1974, p. 198-200.

10. Glazer, F. et al, Emissions for Processes Producing Clean Fuels, EPA-450/2-75-028, U.S. Environmental Protection Agency, Washington, D.C., March 1974, p. X-1 to x-20.

11. Ferrell, J. and G. Poe, Impact of Clean Fuels Combustion on Primary Particulate Emissions from Stationary Sources, PB-253 452, Accurex Corporation, Aerotherm Division, Mountain View, California, March 1976, p. 3-2 to 3-9.

12. Government Concentrates, Chemical and Engineering News, 55(36);16, 1977.

13. Feasibility Study Proposed for North Dakota Methanol Plant, Synthetic Fuels Quarterly Report, Cameron Engineers, Inc., Denver, Colorado, 14 (2): p. 4-16 to 4-17, June 1977.

14. Status of Synfuels Projects/Coal-Louisiana Municipal Power Commission. Synthetic Fuels Quarterly Report, Cameron Engineers, Inc., Denver, Colorado, 14 (2): p. B-11, June 1977.

15. Child, E. T. and C. P. Marion, Recent Developments in the Texaco Synthesis Gas Generation Process, for presentation at the Fertilizer Association of India, National Seminar, New Delhi, India, December 1973.

16. Forney, A. J., et al., Trace Elements and Major Component Balances Around the Synthane PDU Gasifier, Symposium Proceedings: Environmental Aspects of Fuel Conversion Technology-II, December 1975.

17. As Coal Bids for a Chemical Comeback, Chemical Week, 78: 76-80, June 30, 1956.

18. Osur, J. D., Consultant, and E. C. Glass, Northern States Power Company, and A. L. Freeman, Minnkota Power Cooperative, Report on a Proposed Study of a Lignite-Fueled Methanol Plant, March 25, 1977, 65 p.

19. Robin, A. M., The Production of Synthesis Gas from H-Coal Liquefaction Residues, Texaco Inc., Montebello Research Laboratory, for presentation at 83rd National Meeting of the American Institute of Chemical Engineers, Houston, Texas, March 20-24, 1977, Texaco Document No. 2085, 32 p.

20. Evaluation of Coal Gasification Technology, Part II, Low and Intermediate Btu Fuel Gases, Panel on Evaluation of Coal Gasification Technology, Office of Coal Research, U.S. Department of Interior, Washington, D.C., 1974, p. 35.

21. ERDA Awards Contract to W. R. Grace and Co. for Design of Medium Btu Demo Plant, Information from ERDA, Weekly Announcements, Washington, D. C., Article No. 77-150, 3, (35): p. 2, September 2, 1977.

22. Chemical Engineering, June 19, 1978.

23. Crouch, W. G. and G. Klapatch, Solids Gasification for Gas Turbine Fuel 100 and 200 Btu Gas, 11th Intersociety Energy Conversion Conference, Lake Tahoe, September 16, 1976.

24. Economic Studies of Coal Gasification Combined Cycle Systems for Electric Power Generation, Electric Power Research Institute, EPRI AF-62, Project 239, January 1978.

25. Request for Proposal Entrained Gasification-Combined Cycle Power Systems - Environmental Baseline Studies, Texaco, Inc., November 8, 1977.

26. "Chementators," Chemical Engineering, Vol. 85, No. 7, March 27, 1978, p. 68.

APPENDIX B

GAS PURIFICATION OPERATION

Acid Gas Removal Module

Physical Solvents

- Rectisol (Single Absorption Mode)
- Rectisol (Dual Absorption Mode)
- Selexol
- Purisol
- Estasolvan
- Fluor Solvent

Amines

- Sulfiban (MEA)
- MDEA
- SNPA-DEA
- ADIP
- Fluor Econamine (DGA)
- Alkazid (Alkacid)

Mixed Solvents

- Sulfinol
- Amisol

Carbonate Processes

- Benfield (Hot Carbonate)

Redox Processes

- Giammarco-Vetrocoke (G-V)
- Stretford

Methanation Guard

- Zinc Oxide Adsorption
- Iron Oxide Adsorption
- Metal Oxide Impregnated Carbon
- Activated Carbon
- Molecular Sieves

RECTISOL PROCESS
(Single Absorption Mode)

1.0 General Information

1.1 Operating Principles - Physical absorption of the sour components (H_2S, CO_2, COS, mercaptans, etc.) of a gas stream using methanol as the sorbent. Selective regeneration can provide a rich sulfur containing gas stream and a relatively pure CO_2 stream.

1.2 Development Status - Commercially available.

1.3 Licensor/Developer - Lurgi Mineralöltechnik GmbH
American Lurgi Corporation
377 Rt. 17 South
Hasbrouck Heights, N.J.

1.4 Commercial Applications

- Purification of low/medium Btu gas produced from coal gasification. Gasification plants using the process include Sasolburg, South Africa; Westfield, Scotland; and Pristina, Yugoslavia.
- Carbon dioxide removal and drying of coal-derived ammonia synthesis gas. One of the facilities using this process is located in Kutahya, Turkey.
- Carbon dioxide removal from low-temperature fractionation feed gas. The locations of facilities using the process are not known.
- Carbon dioxide and water removal from a feed gas to LNG plants. Plant location(s) are unknown.

2.0 Process Information[1,2,3,6]

2.1 Flow Diagram (see Figure B-1, B-2 and B-3) - The Rectisol Process can be used in a variety of "modes" to achieve different treatment objectives. Only three operation modes which have been used or proposed appear most pertinent to coal conversion and are discussed here. The pertinent features of these operation modes are summarized in Table B-1.

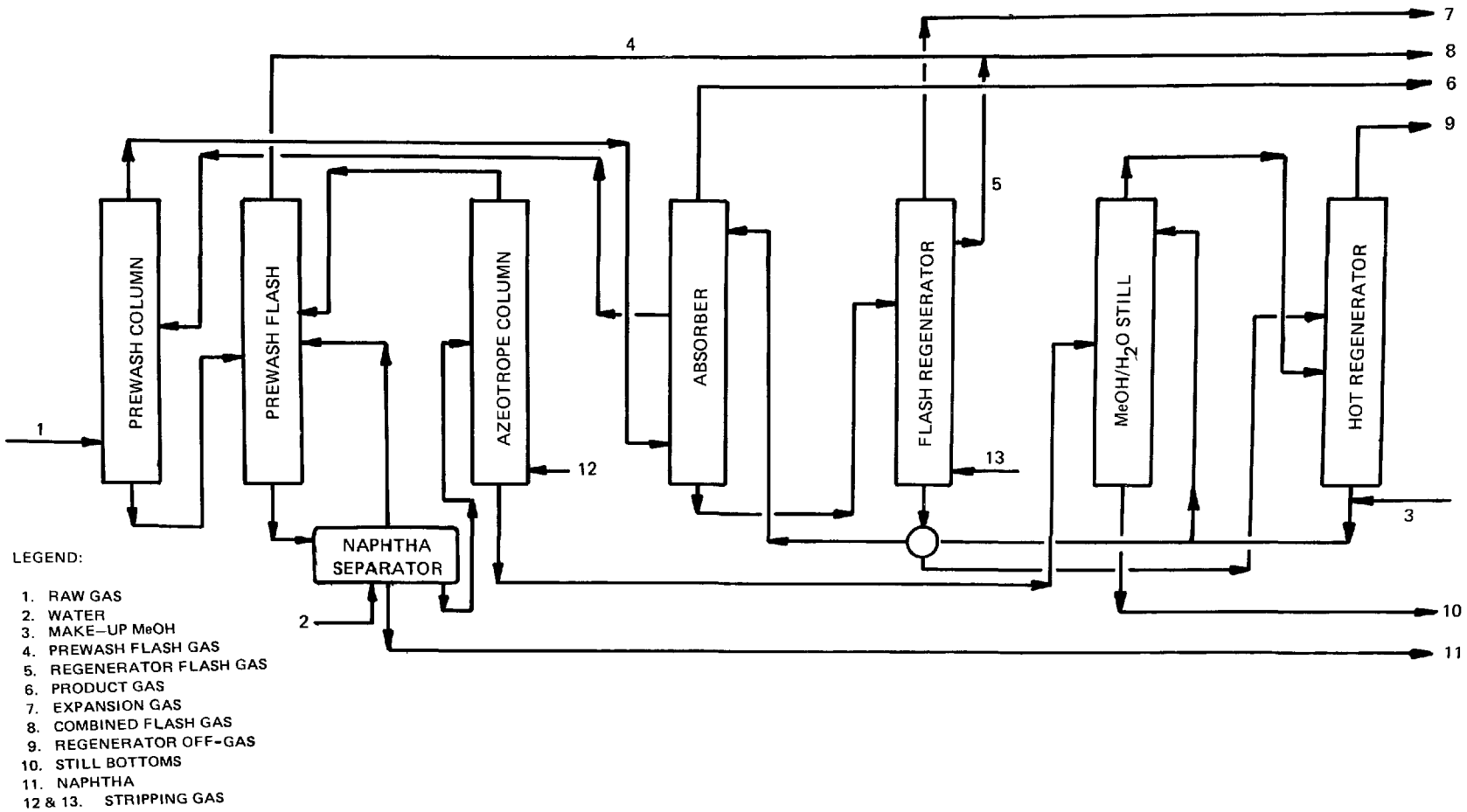

Figure B-1. Rectisol Type A[3] (Removal of CO_2 from Gas Mixtures Containing Little or No H_2S)

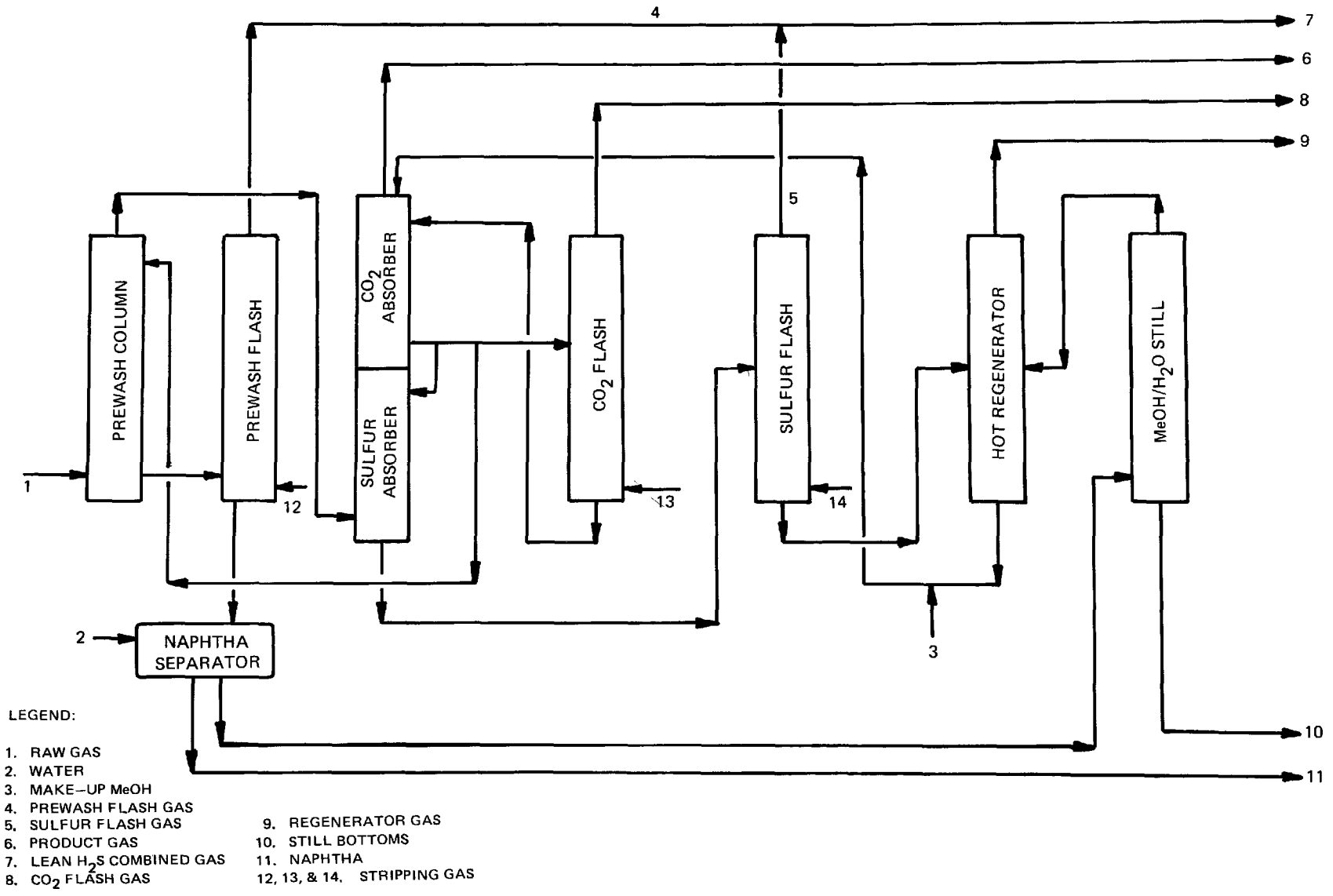

Figure B-2. Rectisol Type B[3] (Removal of CO_2 and H_2S with Separate Recovery)

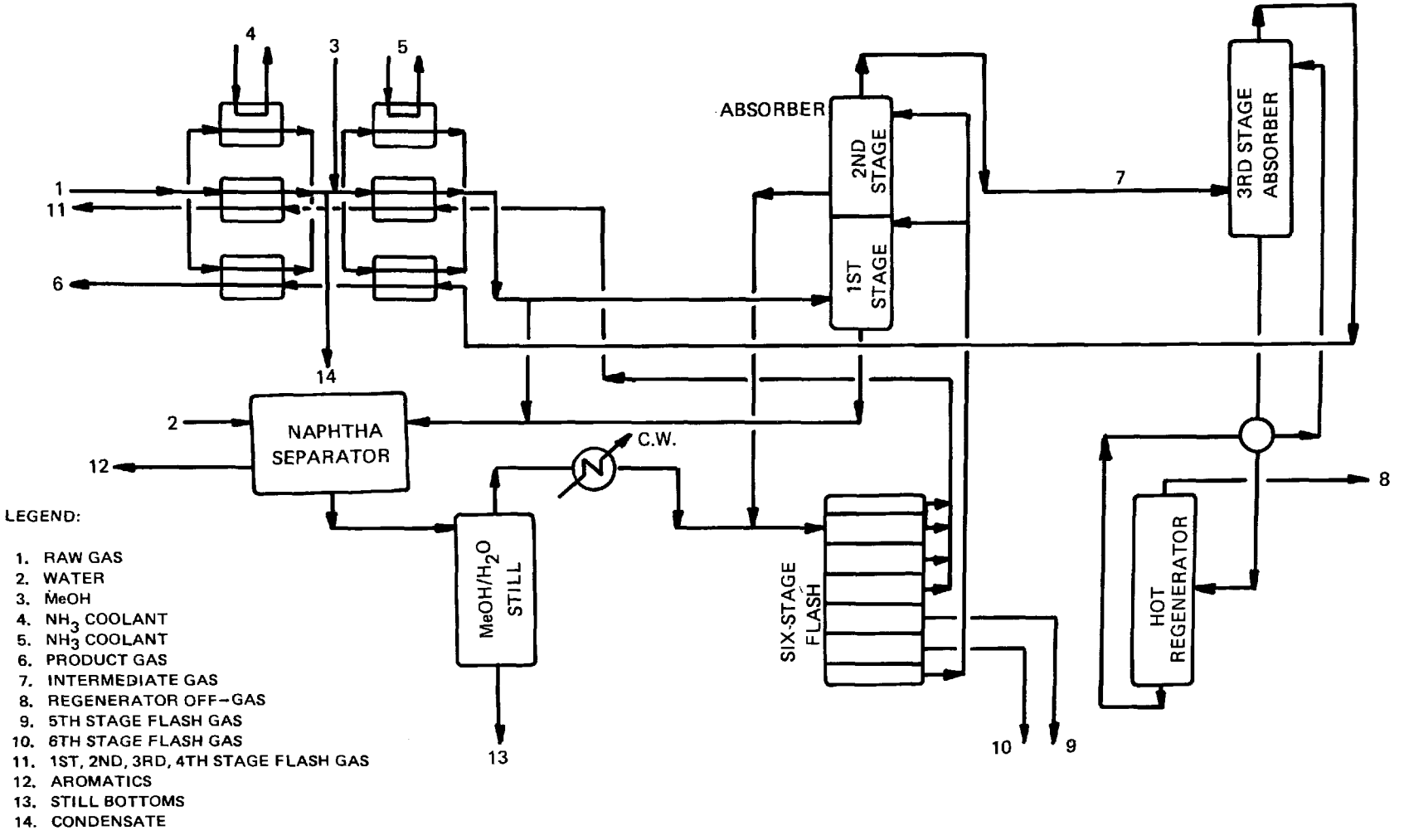

FIgure B-3. Rectisol Type C[3] (Removal of CO_2 and H_2S with Separate Recovery)

TABLE B-1. PROCESS DESCRIPTIONS FOR RECTISOL TYPES A, B, AND C OPERATING MODES

Type	Process Application/ Treatment Objective	Process Description
A (Fig. B-1)	Removal of CO_2 from gas mixture containing little or no sulfur.	A methanol stream rich in CO_2 and H_2S is used in the prewash column to remove water, naphtha, ammonia and residual heavy hydrocarbons from the raw gas. The exit solvent enters the prewash flash column where a flash stream lean in H_2S and rich in CO_2 is produced (Stream 4). The liquid bottoms from the flash vessel are routed to a separator where water (Stream 2) is added so that the naphtha and heavy hydrocarbons can be separated. In the main absorber raw gas contacts a pure methanol stream from the hot regenerator. A slipstream of saturated methanol is sent to the prewash column. The remaining methanol is sent to a flash regenerator where the absorbed gases are removed. Methanol from flash is sent to the hot regenerator where the final traces of CO_2 and H_2S are removed. Water is removed from the prewash methanol in the methanol/water still with off gases going to the hot regenerator. Stripping gases (usually nitrogen) may be used.
B (Fig. B-2)	Simultaneous removal of CO_2 and sulfur compounds with separate recovery.	Except for the use of a two-stage absorber and two separate flash columns, Type B Rectisol is very similar to Type A. The raw gas (after leaving the prewash absorber) is first contacted with a CO_2-saturated methanol stream. This first stage absorber removes H_2S. In the second stage a pure methanol stream removes CO_2. The methanol for first stage comes from the second stage absorber. The two methanol streams are flashed separately to create a stream rich in H_2S (No. 5) and a nearly pure CO_2 stream (No. 8). Regeneration is the same as in the Type A.
C (Fig. B-3)	Same as Type B	The primary difference in Type C as compared to Type B is in the regeneration process. The first stage acts like the prewash in Type B with second and third stages similar to first and second in Type B. A multistage flash unit is used to desorb gases from first and second stage absorption. First stage methanol is first combined with heavy hydrocarbons and water removed from the raw gas and sent to the separator. The separator works in the same manner as the separators in Types A and B. The multistage flash reduces the regeneration requirements. The third stage methanol is handled in a conventional hot regenerator to provide a pure methanol for final absorption. A split stream regeneration section is also shown in Figure B-3. Similar gas cooling sections are used in Types A and B but are not shown on the figures.

2.2 Equipment - Conventional absorbers, stripping columns, distillation columns, heat exchangers, separators and regenerators.

- Construction - vessels may be fabricated from carbon steel, dimensions dependent on application.

2.3 Feed Stream Requirements* - Gas should be cooled to reduce solvent losses; high pressures (close to 2.0 MPa or 300 psia) are usual. Gas temperatures between $253^{o}K$-$213^{o}K$ (-5°F to -75°F) are usual, depending on conditions[6].

2.4 Operating Parameters

- Absorption: 0.3-7.1 MPa (45 to 1066 psia)
  approximately 303°K (80°F)

- Regeneration: see discharge streams, Section 8.0

2.5 Process Efficiency and Reliability

CO_2 better than 97%[4]

H_2S better than 99.9%[4]

Reliability is considered high with a simple solvent and construction.

2.6 Raw Material Requirements

- Solvent - CH_3OH; purity - ?

  Solvent losses can be estimated using equilibrium constants; however, considerable errors could be involved. No information available on solvent losses based on actual operating data.

2.7 Utility Requirements - ?

2.8 Miscellaneous - ?

3.0 Process Advantages

- Lower energy consumption than conventional amine solvent acid gas removal processes[2].

- Can be adapted for removal of all impurities in one pass or for selective removal[2].

*These conditions are for optimum performance; other input conditions can be handled with increased solvent losses and reduced efficiency.

- Production of a product gas with very low water content[2].
- Noncorrosive nature of the solvent[3].
- Unlimited solubility of methanol in water[3].
- Chemical stability and low freezing point[3].
- Good for high pressure applications.

4.0 Process Disadvantages

- Complex flow scheme[2].
- Solvent carryover losses may be high[2].
- Not suited for operation at pressures below 1.1 MPa (165 psia)[2].

5.0 Process Economics - ?

6.0 Input Streams

6.1 Gaseous

- Stream No. 1 - Raw Gas: see Table B-2.
- Stream Nos. 12, 13, and 14 - Types A and B Stripping Gas*[3]: When used, the stripping gas is nitrogen from an oxygen plant.

  Rate: 231,300 - 693,500 Nm^3/hr (153,400 - 430,000 SCFM)

  Temperature: ?

  Pressure: 0.1 - 0.5 MPa (20-80 psia)

6.2 Liquid

- Stream No. 2 - Water to Separator: quantity ?
- Stream No. 3 - Methanol Makeup: quantity ?

7.0 Intermediate Streams

7.1 Gaseous

- Stream Nos. 4 and 5 - Types A and B Flash Gases: ?
- Stream No. 7 - Type C Intermediate Gas: ?

*This corresponds to the range from Type A and B facilities reported in Table B-2 from Reference 3.

TABLE B-2. RECTISOL GASEOUS INPUT STREAMS

Constituents/ Parameters	Stream Number Reference				
	$1^{(5)}$ Type A	$1^{(3)}$ Type A	$1^{(3)}$ Type B	$1^{(3)}$ Type B	$1^{(4)}$ Type C
H_2*	40.05	58.4	62.31	61.59	63.74
CO	20.20	0.3	3.25	2.60	4.13
CH_4	8.84	0.2	0.17	0.33	0.13
CO_2	28.78	21.9	33.25	34.55	31.62
N_2 + Ar	1.59	19.2	0.53	0.41	0.12
H_2S	4220 mg/Nm^3	--	0.49	0.52	0.26
COS	10 ppm	--	10 ppm	--	63 ppm
CS_2	--	--	--	--	--
RSH	20 ppm	--	--	--	--
Thiophene	--	--	--	--	--
C_2+	0.54	--	--	--	--
MeOH	--	--	--	--	--
Temp: ^oK (^oF)	303 (86)	--	--	--	303 (86)
Pressure: MPa (psia)	2.5 (380)	2.4 (356)	3.2 (480)	7.1 (1066)	0.3 (45)
Rate: Nm^3/hr (SCFM)	381,000 (236,000)	153,100 (94,300)	142,340 (88,250)	137,000 (84,940)	80,000 (49,600)

*All values, unless otherwise noted, are in volume percent.

8.0 Discharge Streams

8.1 Gaseous

- Stream No. 6 - Product Gas: see Table B-3.
- Stream Nos. 7, 8 and 9 - Types A and B Off-Gases: see Table B-4.
- Stream Nos. 8, 9, 10 and 11 - Type C Off-Gases: see Table B-4.

8.2 Liquid

- Stream No. 10 - Types A and B Still Bottoms: ?
- Stream No. 11 - Types A and B Hydrocarbons and Stream No. 12 - Type C Hydrocarbons: ?
- Stream No. 13 - Type C Still Bottoms[4]:

Rate:	16 m^3/hr
pH:	9.7
Phenol:	18 mg/1
Cyanide (as CN):	10.4 mg/1 (includes thiocyanate)
Ammonia (as N):	42 mg/1
Sulfides (as S):	Trace
Oxygen Absorbed:	286
COD:	1,606 mg/1
Conductivity:	1,111 μmhos/cm

- Stream No. 14 - Type C: ?

9.0 Data Gaps and Limitations

The major limitation in the data is that not all input and discharge streams are characterized and the characterizations are not comprehensive in that all potential pollutants and toxicological and ecological properties are not identified. An example is the total lack of data on MeOH carryover.

10.0 Related Programs - ?

TABLE B-3. RECTISOL PRODUCT GAS STREAMS

Constituents/ Parameters	Stream No.				
	6(5) Type A	6(3) Type A	6(3) Type B	6(3) Type B	6(4) Type C
H_2	57.30	74.8	94.08	94.92	93.58
CO	28.40	0.38	4.86	3.94	6.06
CH_4	11.38	0.25	0.24	0.47	0.19
CO_2	0.93	60 ppm	10 ppm	50 ppm	--
N_2 + Ar	1.77	24.57	0.82	0.67	0.17
H_2S	0.05 mg/Nm^3 total sulfur	--	--	1 ppm	--
COS	--	--	--	--	--
CS_2	--	--	--	--	--
RSH	--	--	--	--	--
Thiophene	--	--	--	--	--
C_2+	--	--	--	--	--
MeOH	--	--	--	--	--
Temp: °K (°F)	288(59)	--	--	--	295(72)
Pressure: MPa (psia)	2.3(345)	2.2(327)	3.0(450)	6.9(1037)	2.9(440)
Rate: Nm^3/hr (SCFM)	263,000 (163,000)	118,500 (73,500)	94,040 (34,300)	88,530 (54,890)	54,500 (33,800)

TABLE B-4. RECTISOL OFF-GAS STREAMS

Constituents/ Parameters	Stream Number Reference														
	Type A(3)		Type B(3)			Type B(3)			Type B(4)			Type C(4)			
	8	9	7	8	9	7	8	9	7	8	9	11	9	10	8
H_2	0.4	--	0.15	0.79	--	0.76	--	--	0.33	--	--	21.4	2.6	0.14	--
CO	0.014	--	0.04	0.22	--	0.11	--	--	0.14	--	--	18.2	4.8	0.0	--
CH_4	0.017	--	--	0.05	--	0.06	--	--	0.00	--	--	11.4	7.2	0.9	--
CO_2	73.95	--	76.81	98.91	64.6	90.85	--	68.31	80.19	--	68.46	46.7	83.4	97.2	--
N_2 + Ar	25.62*	--	23.0*	0.05	0.1	8.22*	--	1.92	19.34*	--	--	1.5	0.8	0.03	--
H_2S	--	--	2 ppm	2 ppm	35.2	5 ppm	--	29.77	<5 ppm	--	30.78	3176 ppm	4941 ppm	8824 ppm	--
COS	--	--	--	--	0.1	--	--	--	8 ppm	--	0.76	--	--	0.003	--
C_2+	--	--	--	--	--	--	--	--	--	--	--	0.7	1.1	0.7	--
MeOH	--	--	--	--	--	--	--	--	--	--	--	--	--	--	--
CS_2	--	--	--	--	--	--	--	--	--	--	--	--	--	0.0002	--
RSH	--	--	--	--	--	--	--	--	--	--	--	--	--	0.028	--
Thiophene	--	--	--	--	--	--	--	--	--	--	--	--	--	0.0002	--
Temp: ^oK (^oF)	--	--	--	--	--	--	--	--	295(72)	--	322(121)	273(32)	273(32)	268(23)	--
Pressure: MPa (psia)	0.1(15)	--	0.1(15)	0.24(36)	0.24(36)	0.1(16)	--	0.2(28)	0.1(15)	--	0.5(73)	1.3(195)	0.46(70)	0.1(15)	--
Rate: Nm^3/hr (SCFM)	45,090 (27,956)	--	41,480 (25,845)	14,130 (8,760)	1980 (1230)	50,280 (31,170)	--	2390 (1480)	30,800 (19,100)	--	673 (417)	4500 (2852)	15,000 (9,300)	98,000 (60,760)	--

*Includes N_2 stripper gas.

REFERENCES

1. Sinor, J.E., Evaluation of Background Data Relating to New Source Performance Standards for Lurgi Gasification, EPA-600/7-77-057, June 1977.

2. Kohl, A. and Riesenfeld, F., Gas Purification, Gulf Publishing Co., Houston, Texas, 1974.

3. Scholz, W.H., Rectisol: A Low-Temperature Scrubbing Process for Gas Purification, Advances in Cyrogenic Engineering, Vol. 15, 1969.

4. Draft: Standards Support and Environmental Impact Statement Volume 1: Proposed Standards of Performance for Lurgi Coal Gasification Plants, November 1976.

5. Information provided by South African Coal, Oil & Gas Corporation, Limited, to the Fuel Process Branch of EPA's Industrial Environmental Research Laboratory (Research Triangle Park), November 1974.

6. Maddox, R.N., Gas and Liquid Sweetening, Campbell Petroleum Series, 1974.

RECTISOL PROCESS (DUAL ABSORPTION MODE)

1.0 General Information

1.1 Operating Principles - Physical absorption of acid gases (CO_2, H_2S, COS, CS_2, etc.) using methanol. When operated in the dual absorption mode, CO_2 saturated methanol is used in the first absorption step to remove H_2S and other sulfur compounds. In the second absorption step, pure methanol is used for the absorption of CO_2.

1.2 Development Status - Commercially Available.

1.3 Licensor/Developer - Lurgi Mineralöltechnik GmbH
American Lurgi Corporation
377 Rt. 17 South
Hasbrouck Heights, New Jersey

1.4 Commercial Applications - A Rectisol of this type is installed at Modderfontein, South Africa for purification of synthetic gas from coal for manufacture of ammonia.

2.0 Process Information

2.1 Flow Diagram - see Figure B-4[1].

- Process Description - CO_2 and H_2S are absorbed in separate columns with CO shift occurring between operations. In essence two separate Rectisol units, each with its own stripper column (but with common still and regenerator) are employed. CO_2 saturated methanol is used to absorb H_2S in the first absorber. Pure methanol from the regenerator is used in the CO_2 absorber.

2.2 Equipment - Conventional absorbers, stripping columns, distillation columns, heat exchangers and knockout drums.

- Construction - vessels may be fabricated from carbon steel; dimensions dependent on application.

2.3 Feed Stream Requirements - ?

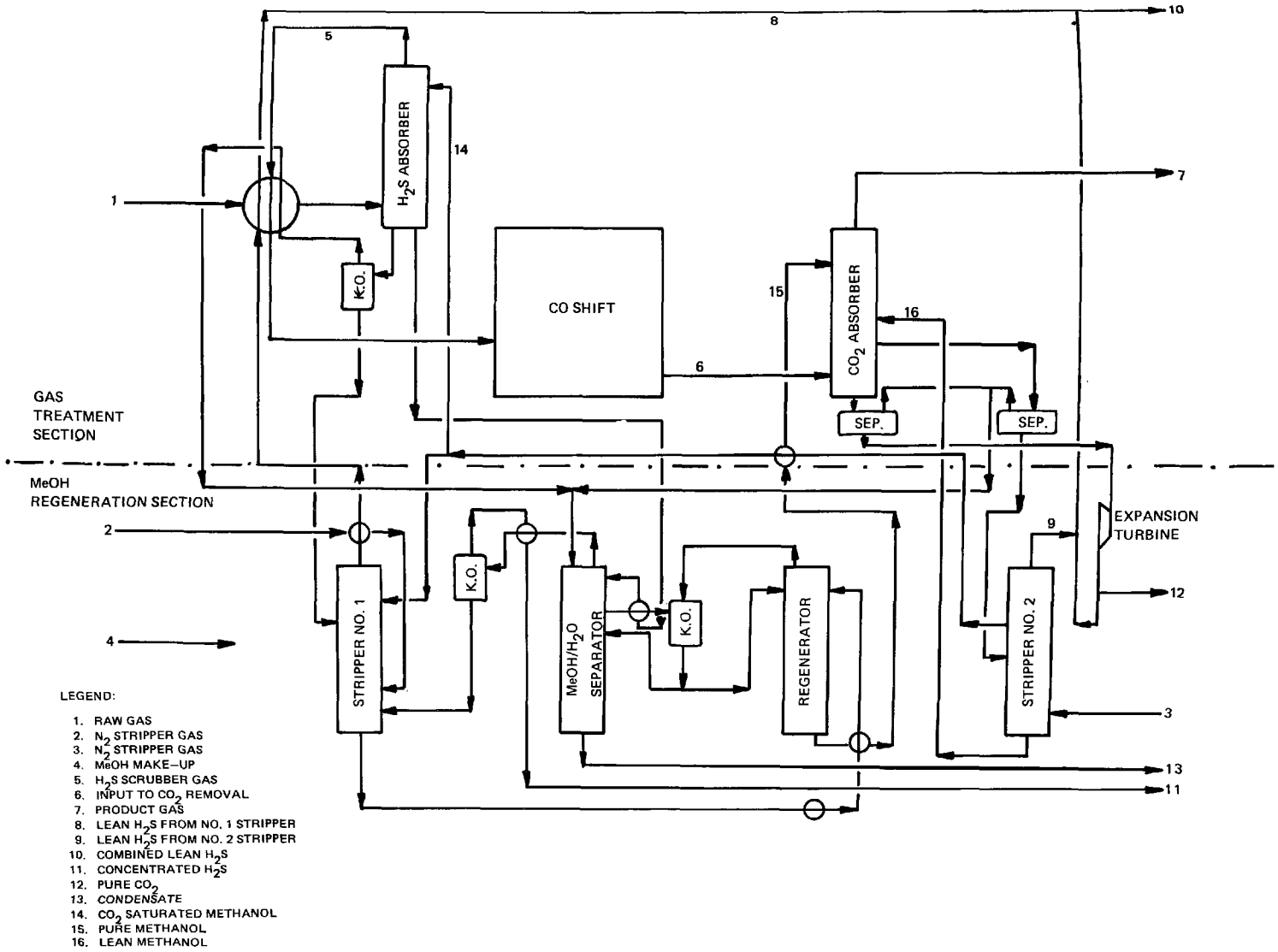

Figure B-4. Rectisol - Dual Absorption Flow Diagram (as installed at Modderfontein, South Africa)

2.4 Operating Parameters[1,2,3]

- Absorption - H_2S: 297^oK (75^oF) 3.0 MPa (440 psia)
  CO_2: 213^oK (-75^oF) 4.9 MPa (720 psia)
- Regeneration - ?

2.5 Process Efficiency and Reliability - Removal of acid gases to a few micrograms per cubic meter. Reliability is high due to relatively simple operation.

2.6 Raw Material Requirements

- Solvent - Methanol

2.7 Utility Requirements - Utility requirements are high due to large refrigeration requirements. Exact amounts are unknown.

2.8 Miscellaneous - ?

3.0 Process Advantages

- A single solvent (methanol) is used for absorption of both CO_2 and H_2S.
- Noncorrosive environments.
- H_2S streams rich enough to be processed in a Claus unit can be obtained.
- Good selectivity between acid and product gases.
- Unlimited solubility of solvent in water.
- Solvent is chemically stable and has a low freezing point.

4.0 Process Limitations

- Solvent retains heavy hydrocarbons.
- Solvent losses during regeneration may be high.
- High utility requirements.

5.0 Process Economics - ?

6.0 Input Streams

All stream data based on the Modderfontein plant.

6.1 Gaseous

6.1.1 Stream No. 1

Composition, wt %	Ref. 1	Ref. 2
CO_2	11.6	13.37
CO	55.02	54.45
H_2	31.2	30.00
N_2	1.0	0.95
Ar	0.5	0.54
CH_4	0.1	0.10
H_2S	0.5	0.59 (includes COS)
COS	0.8	--
MeOH	0	0
Volume Nm^3/(scfm)	91,700 (53,370)	--
Pressure, MPa (psia)	--	--
Temperature, ^oK (^oF)	--	--

6.1.2 Stream Nos. 2 and 3 - Nitrogen from air separation plant, rate unknown.

6.2 Liquid

Stream No. 4 - Methanol makeup, rate unknown.

7.0 Intermediate Streams

7.1 Gaseous

7.1.1 Stream No. 5

Composition, wt %	Ref. 1	Ref. 2
CO_2	12.00	11.27
CO	54.60	56.02

Composition, wt %	Ref. 1	Ref. 2
H_2	31.80	31.06
N_2	1.00	0.98
Ar	0.50	0.57
CH_4	0.10	0.10
H_2S	--	--
COS	--	--
MeOH	--	--
Volume, Nm^2/hr (scfm)	93,300 (58,370)	--
Pressure, MPa (psia)	3.0(440)	--
Temperature, ^oK (^oF)	298(75)	--

7.1.2 Stream No. 6

Composition, wt %	Ref. 1	Ref. 2
CO_2	41.30	41.29
CO	3.00	3.00
H_2	54.64	54.63
N_2	0.70	0.64
Ar	0.30	0.37
CH_4	0.06	0.07
H_2S	--	--
COS	--	--
MeOH	--	--
Volume, Nm^3/hr (scfm)	140,000 (87,590)	--
Pressure, MPa (psia)	5.0(735)	--
Temperature, ^oK (^oF)	308(95)	--

7.1.3 Stream No. 8 - ?

7.1.4 Stream No. 9 - ?

8.0 Discharge Streams

8.1 Gaseous

8.1.1 Stream No. 7

Composition, wt %	Ref. 1	Ref. 2
CO_2	--	--
CO	4.60	5.02
H_2	93.50	93.14
N_2	1.20	1.12
Ar	0.60	0.61
CH_4	0.10	0.11
H_2S	--	--
COS	--	--
MeOH	--	--
Volume, Nm^3/hr (scfm)	80,000 (50,110)	--
Pressure, MPa (psia)	4.9(720)	--
Temperature, ^oK (^oF)	213(-75)	--

8.1.2 Stream No. 10 - ?

8.1.3 Stream No. 12 - Mostly CO_2, trace constituents unknown.

8.1.4 Stream No. 11

Composition, wt %	Ref. 1	Ref. 2
CO_2	75.00	--
CO	--	--
H_2	--	--
N_2	--	--
Ar	--	--
CH_4	--	--
H_2S	22.00	--
COS	3.00	--
MeOH	--	--
Volume, Nm^3/hr (scfm)	21,000 (13,140)	--
Pressure, MPa (psia)	0.1 (15)	--
Temperature, °K (°F)	313(105)	--

8.2 Liquid

Stream No. 13 - ?

9.0 Data Gaps and Limitations

Limitations in the data for the selective absorption Rectisol relate primarily to the stream compositions. These limitations include the following:

- Input gas streams - little data on minor component concentrations. No data on N_2 stripper gas rates.
- Makeup methanol - no data on amount of makeup methanol required.
- Intermediate and product gas streams - limited data on minor components.
- Discharge gas streams - very limited data on compositions of offgas streams from the strippers and regenerator.
- Condensate stream - no data on compositions and rates of regenerator condensate stream.
- Operating parameters - utility requirements, regeneration parameters, etc. are not reported.

10.0 Related Programs

No known programs are presently being undertaken to assess the discharges from this process.

REFERENCES

1. Staege, Hermann, Ammonia Production on the Basis of Coal Gasification, Chemical Industry Developments, 1973.
2. Schellberg, Wolfgang, Coal Based Ammonia Plants, ICI Operating Symposium 1974, Paper 21.
3. Goeke, E.K., Status of Coal Gasification Technology, FAI Symposium on Coal as Feedstock for Fertilizer Production, New Delhi, India, 1974.

SELEXOL PROCESS

1.0 General Information

1.1 Operating Principle[1] - The physical absorption of the sour components (H_2S, CO_2, COS, mercaptans, etc.) of a gas stream using the Selexol (dimethyl ether of a polyethylene glycol) solvent.

1.2 Development Status - Commercially available.

1.3 Licensor/Developer - Allied Chemical Corporation
Gas Purification Department
P.O. Box 1013R
Morristown, New Jersey 07960

1.4 Commercial Applications

Eleven commercial plants have been put into operation. Applications include: The purification of sour natural gas; synthesis gas from the gasification of coal, oil and light hydrocarbons[2].

Applicability to coal gasification[3,5]: The Bi-Gas pilot plant of Bituminous Coal Research, Inc. at Homer City, Pennsylvania incorporates the Selexol process to remove the H_2S and CO_2 components of the gas from the CO-shift.

2.0 Process Information

2.1 Flow Diagram[2] - see Figure B-5 for one Selexol design for treatment of coal or oil gasification product cases.* Sour feed gas (Stream 1) containing H_2S and CO_2 enters the H_2S absorber, where H_2S is absorbed selectively to maximize its content in the off-gas to a sulfur recovery plant (Stream 2). Solvent is regenerated by reboiled steam. The essentially sulfur-free product then enters the CO_2 absorber where

*Designs for nonselective acid gas removal are different than the one shown in Figure B-5.

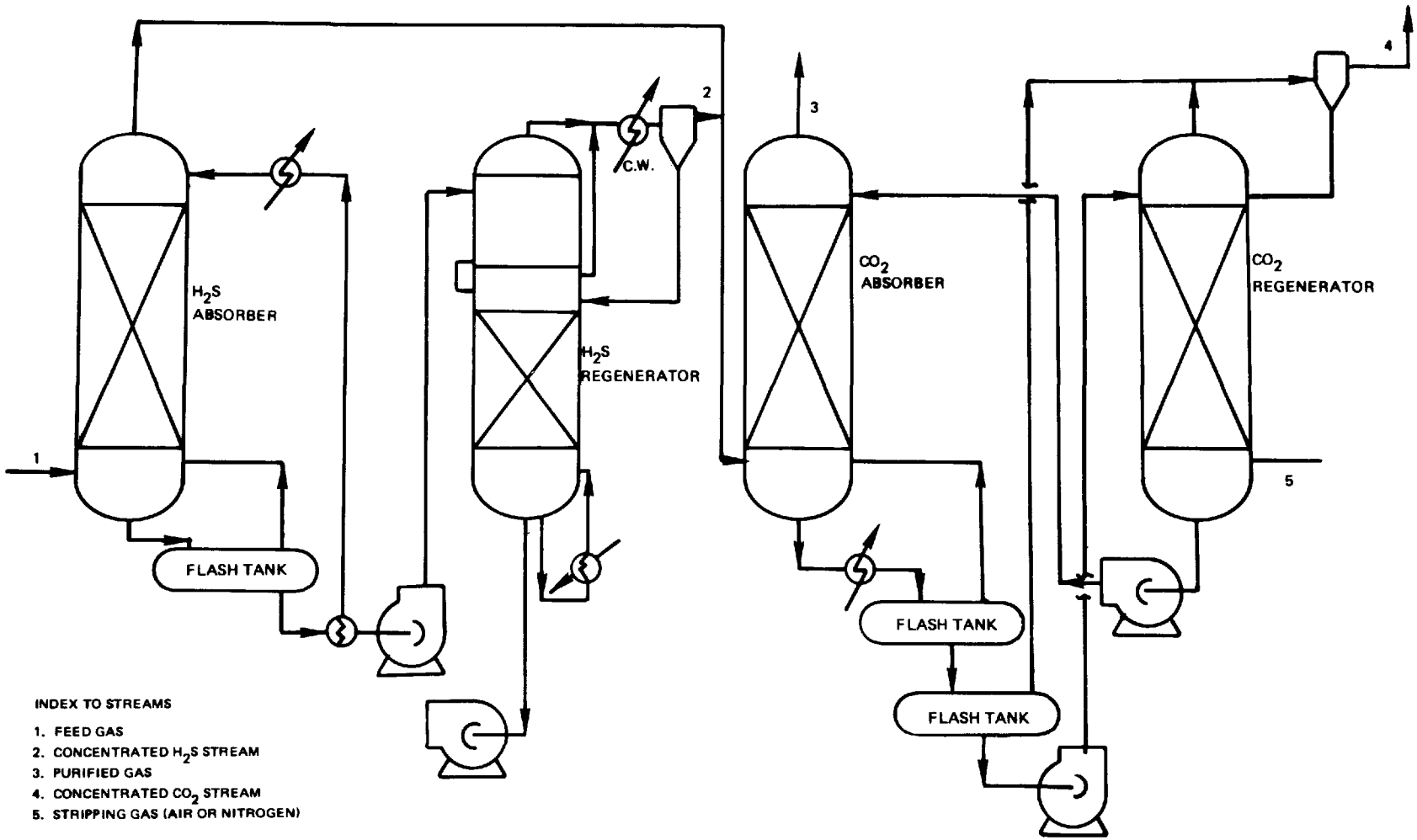

Figure B-5. Selexol Solvent Process (with three flashing stages)

CO_2 is removed so that the final product gas (Stream 3) is suitable for feed to a methanator. The solvent is regenerated by pressure letdown and inert gas stripping (air or nitrogen). Hydraulic letdown turbines extract energy from the high pressure solvent streams during letdown. Recycle loops return coabsorbed product to the absorbers, enhancing selectivity.

2.2 Equipment

Conventional absorbers, flash vessels, and stripping columns. Absorbers and strippers employ both packing and trays.

2.3 Feed Stream Requirements

Pressure: 2.0-10.7 MPa (300-1500 psia) typical
Temperature: Usually air cooled or exchanged

2.4 Operating Parameters

2.4.1 Absorption Step

Pressure: 2.0-10.7 MPa (300-1500 psia) typical
Temperature: 270°K-310°K (20°F-100°F) typical

2.4.2 H_2S Regeneration Step

Pressure: 2.0-10.7 MPa (300-1500 psia)
Temperature: Up to 450°K (350°F)

2.4.3 CO_2 Regeneration Step

Pressure: 0.14 MPa (20 psia) typical
Temperature: 255°K-450°K (0°F-350°F)

2.5 Process Efficiency and Reliability

Process can reduce H_2S, COS and mercaptans concentrations to less than 1 ppm each. The CO_2 level can be reduced to any desired level by adjusting the solvent mix[5].

In over thirteen years of commercial application, the process has been reported to be dependable, flexible, and relatively maintenance free[2,5].

2.6 Raw Material Requirements[5]

Solvent makeup: 8g/1000 Nm^3 (0.5 lb/MMSCF) of gas.

2.7 Utility Requirements[5] - Typical requirements when treating gas containing 0.5% H_2S and 35% CO_2 at 3.5 MPa (500 psig) with <0.01 ppm H_2S and 11% CO_2 in purified gas are as follows:

Steam:	50,800 kg/10^6 Nm^3 (3000 lb/MMSCF)
Cooling Water:	4.8 x 10^6 ℓ/10^6 Nm^3 (3500 gallons/MMSCF)
Electricity:	33,500 kwh/10^6 Nm^3

2.8 Miscellaneous[5]

Solvent discharged from stack or from drips and spills will readily remove paint; therefore, good housekeeping is required.

Possible problems due to build-up of inert materials; e.g., glycol, compressor oil, and heavy hydrocarbons in solvent.

3.0 Process Advantages

- Economic removal of H_2S of <1 ppm[6].
- Economically attractive for bulk removal of CO_2[3].
- Selective removal of COS to <1 ppm.
- NH_3 can be reduced to low ppm levels[3].
- Feed gas can be varied over a broad range in existing equipment[2,6].
- Regeneration can be accomplished by flashing, inert gas stripping and/or heat treatment[2,7].
- Solvent is noncorrosive, nonfoaming, nontoxic, and biodegradable.
- Low heat of absorption, low specific heat and low vapor pressure minimize solvent losses[2].
- Process is highly selective to sulfur compounds and yields a high sulfur feed gas to sulfur recovery[2]. (See Table B-5 for relative solubility of selected chemicals in the Selexol solvent.)
- Process dehydrates gas during H_2S/CO_2 removal[8].
- Process reduces heavy hydrocarbon content of feed gas to meet hydrocarbon dewpoint[8].

- Solvent is not degraded by impurities in the feed gas; thus, no solvent reclaimer is required[5].

TABLE B-5. RELATIVE ORDER OF SOLUBILITIES OF GASES IN SELEXOL SOLVENT[3]

1. HCN (most)	11. NH_3
2. H_2O	12. C_5
3. C_4H_4S	13. COS
4. SO_2	14. C_4
5. C_6H_6	15. C_3
6. C_7	16. CO_2
7. CS_2	17. C_2
8. CH_3SH	18. C_1
9. C_6	19. CO
10. H_2S	20. H_2 (least)

4.0 Process Limitations

- Hydrocarbons are absorbed proportional to their partial pressures*[5,6]. (See Table B-5.)
- Not designed to treat gas at low pressures and/or with low acid gas concentrations[5].
- Solvent is expensive ($8.60/gallon, 1976)[3].
- Selectivity of Selexol Process for H_2S over CO_2 is somewhat decreased if COS is also to be removed along with H_2S[8].

5.0 Process Economics[8]

The estimated cost of treating 2,830,000 Nm^3 (100 MMSCF) of gas containing 43% CO_2 and no H_2S at a temperature of 291°K to 322°K (65°F to 120°F) and pressure of 6.22 MPa to 7.58 MPa (900 to 1000 psig) is $3.66/$10^3$ Nm^3 (9.8 cents/10^3 SCF).

6.0 Input Stream[3]

6.1 Feed Gas (Stream 1) - See Tables B-6 and B-7.

6.2 Stripping Gas (Stream 5) - Air or nitrogen, no quantitative data available.

TABLE B-6. OPERATING CONDITIONS AND MOLAR BALANCE FOR THE SELEXOL PROCESS FOR REMOVAL OF CO_2 FROM NATURAL GAS[4]

Operating Conditions	Stream 1 Feed Gas	Stream 3 Purified Gas	Stream 4 Acid Gas
Volumetric Flow Rate -Nm^3/d (MMSCFD)	2.83×10^6 (100)	1.58×10^6 (56)	1.25×10^6 (44)
Pressure, MPa (psia)	6.8 (100)	6.63 (975)	0.11 (16)
Temperature, ^oK (^oF)	302 (85)	297 (75)	297 (75)
Components	moles/day	moles/day	moles/day
CO_2	116,095.0	4,094.1	112,000.9
N_2	1,556.9	1,556.0	0.9
CH_4	144,337.3	140,895.3	3,442.0
C_2H_6	1,447.8	1,183.0	294.8
C_3H_8	369.4	107.5	261.9
H_2S	15.8	0.8	15.0
Total	263,852.2	147,836.7	116,015.5
CO_2 Mole %	44	2.8	96.5
CH_4 Mole %	54.7	95.3	3.0
H_2S ppm	60.0	5.4	129.3

7.0 Discharge Streams[3]

7.1 Purified Gas Stream (Stream 3)

7.2 Concentrated H_2S Stream (Stream 2)

7.3 Concentrated CO_2 Stream (4)

} See Tables B-6 and B-7

TABLE B-7. STREAM COMPOSITIONS FOR SELEXOL PROCESS DESIGNED FOR SELECTIVE ACID GAS REMOVAL FROM COAL GASIFICATION PRODUCT GAS(8)

Component*	Stream 1 Feed Gas	Stream 3 Purified Gas	Stream 2 Concentrated H_2S	Stream 4 Concentrated CO_2
CO_2	31	0.5	68	98
H_2S	7000 PPMV	<1 PPMV	32	5 PPMV
CH_4	8	11	--	--
H_2	46	67	--	2
CO	15	22	--	--

*Volume % unless specified otherwise.

8.0 Data Gaps and Limitations

Data gaps exist in the following areas:

Applicability to coal conversion processes:

- Process reliability and efficiency
- Feed stream requirements with regard to the concentrations of various contaminants (e.g., COS, HCN) temperature and pressure.
- The effect that various contaminants (NH_3, HCN, CS_2, trace metals, etc) have on the process, and the ultimate fate of such contaminants in the system.

Operating parameters and feed stream requirements in refinery and natural gas processing:

- Applicable temperature, pressure and concentration ranges for feed gas streams and appropriate operating conditions for various steps in the process (absorption step, regeneration step, etc.).
- The effect that various contaminants (NH_3, carbonaceous matter, trace metals, etc.) have on the process, and the ultimate fate of such contaminants in the system.

9.0 Related Programs

The joint ERDA/AGA funded Bi-Gas Pilot Plant, operated by Phillips Petroleum, at Homer City, Pennsylvania has a Selexol system incorporated

in its design. The Selexol system removes the H_2S and CO_2 components of the gas from the CO-shift.

The original contract has expired, and at this time Phillips is awaiting further funding from ERDA prior to continued operation of the Homer City facility.

REFERENCES

1. Riesenfeld, F.C., and Kohl, A.L., Gas Purification, Second Edition, Houston, Texas, Gulf Publishing Co., 1974.

2. Gas Processing Handbook, Hydrocarbon Processing, Vol. 54, No. 4, April 1975.

3. Valentine, J.P., New Solvent Process Purifies Crude, Coal Acid Bases, The Oil and Gas Journal, 18 November 1974.

4. Raney, D.R., Remove Carbon Dioxide with Selexol, Hydrocarbon Processing, April 1976.

5. Handbook of Gasifiers and Gas Treatment Systems, Dravo Corp. for ERDA, FE-1772-11, February 1976.

6. Hegwer, A.M., and Harris, R.A., Selexol Solves High H_2S/CO_2 Problem, Hydrocarbon Processing, April 1970.

7. Maddox, R.N., Gas and Liquid Sweetening, Campbell Petroleum Series, 1974.

8. Information supplied to TRW by J. P. Valentine of Allied Chemical Corporation, June 28, 1978.

PURISOL PROCESS

1.0 General Information

1.1 Operating Principles - The physical absorption of the sour components (e.g., CO_2 and H_2S) of a gas stream using N-methyl-2-pyrrolidone (NMP)[5,6].

1.2 Development Status - Commercially available.

1.3 Licensor/Developer - American Lurgi Corporation
377 Route 17
Hasbrouck Heights, New Jersey 07604

1.4 Commercial Applications[1,2]

- Four plants are in operation:
  - Two in high pressure hydrogen manufacturing
  - Two in natural gas treating

2.0 Process Information[1]

2.1 Flow Diagram (see Figure B-6) - Feed gas, Stream 1, enters the absorber where it is dehydrated with a slipstream of rich NMP, and then scrubbed with regenerated NMP. Lean NMP enters the top of the absorber. The feed gas passes counter-flow to the lean NMP solution. Entrained NMP is recovered by a water wash before the purified gas, Stream 2, exits the top of the absorber. Rich solvent is flashed at high pressure in the lower section of the absorber. The gases evolved in this flashing step are separated, recompressed, cooled and recycled to the feed gas stream.

The rich solvent exits the bottom of the absorber; it is cooled and piped to a stripping column. It is regenerated in this column by two-stage flashing at atmospheric pressure. Acid gases are evolved during this step. The gases evolved are separated and piped to sulfur recovery. The lean solvent is pumped to the absorber.

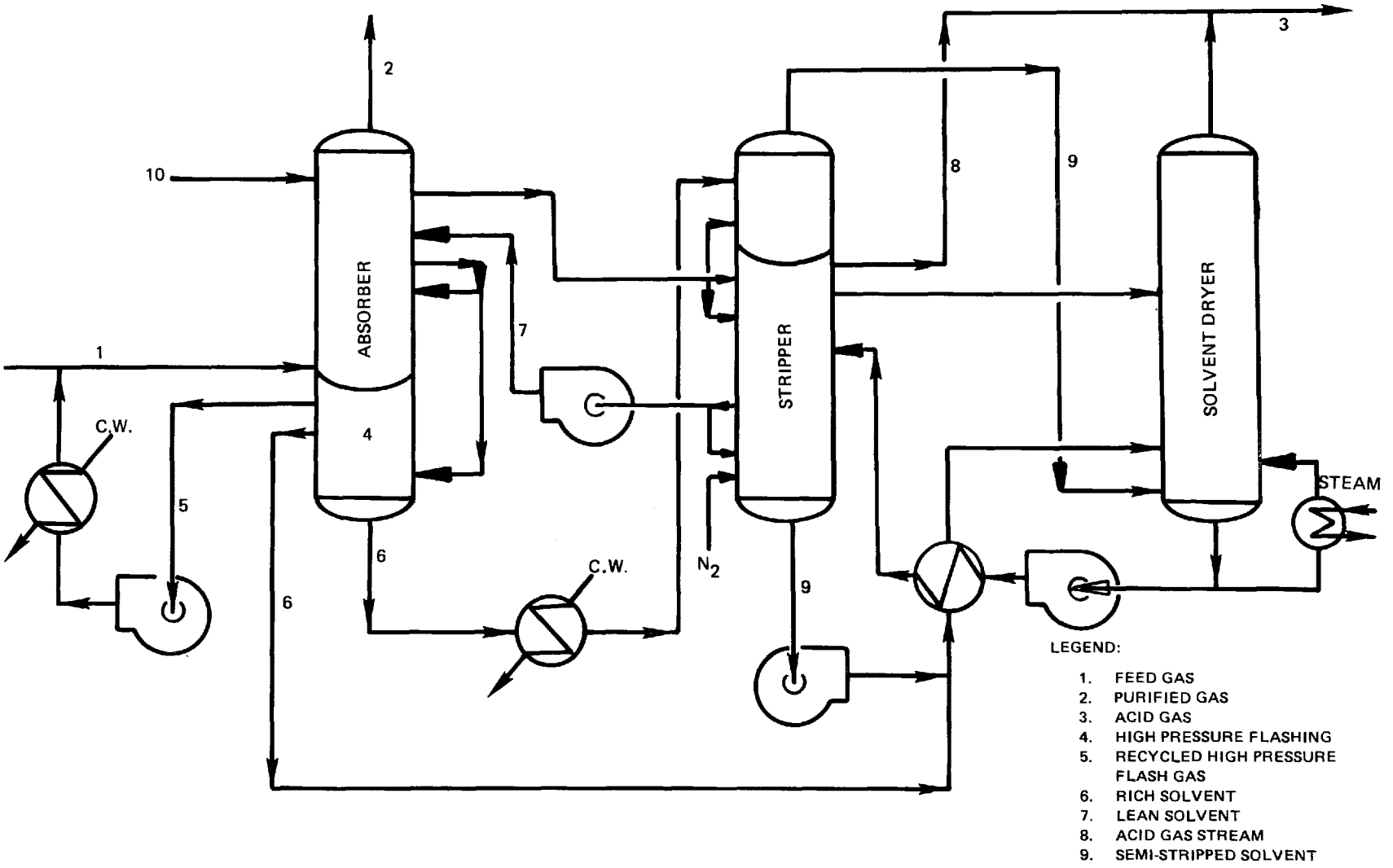

Figure B-6. Purisol Process

The NMP/water mixture from the absorber and stripper are combined and sent to the solvent dryer. Acid gases evolved during the drying step are combined with the acid gas stream from the stripper to form Stream 3, and piped to sulfur recovery. Dehydrated NMP is returned to the stripper.

2.2 Equipment - Conventional absorbers, stripping columns and flash vessels.

2.3 Feed Stream Requirements

- Temperature: ?
- Pressure: ?
- Others: ?

2.4 Operating Parameters

2.4.1 Absorption Step

- Temperature: ?
- Pressure: ?
- Others: ?

2.4.2 Stripping Step

- Temperature: ?
- Pressure: ?
- Others: ?

2.4.3 Solvent Drying Step

- Temperature: ?
- Pressure: ?
- Others: ?

2.5 Process Efficiency and Reliability[1]

- Process can reduce H_2S concentration to 4 ppm and CO_2 concentrations to 2-3 vol %.

2.6 Raw Material Requirements[1]

- Solvent makeup 35 g/1000 Nm^3 (2.1 lbs/MMscf) acid gas treated.

2.7 Utilities Requirements[2] - Typical requirements for a plant operating with feed conditions of 2,830,000 Nm^3/day (100 MMscfd) at a pressure of 7.4 MPa (1070 psig) and temperature of 317°K (110°F) are:

- Electric power: 2100 kW
- Steam: 4.06 MPa (45 psig) 1.7 tonne/hr (1.87 ton/hr)
- Cooling water: 297°K (75°F) 300 m^3/hr (10,600 ft^3/hr)
- Condensate: 1.3 tonne/hr (1.43 ton/hr)
- Solvent makeup: 3 kg/hr (6.6 lb/hr)

2.8 Miscellaneous - ?

3.0 Process Advantages[3,5,6]

- Solvent is noncorrosive and nonfoaming
- Low vapor pressure minimizes solvent losses
- Solvent is readily available
- Solvent preferentially absorbs sulfur compound and CO_2.

4.0 Process Limitations

- At pressures of 2.8 MPa (400 psig) and lower, process is uneconomical[4].
- Absorbs high molecular weight hydrocarbons[3].

5.0 Process Economics[1]

Typical requirements per 1000 Nm^3 (MMscf) for a feed gas containing 6 vol.% H_2S and 15 vol.% CO_2 at 7.38 MPa (1070 psig) with 2 ppm H_2S and 13.6 vol.% CO_2 in purified gas are:

- Steam: 50 kg/1000 Nm^3 (3125 lb/MMscf)
- Cooling water: 1780 ℓ/1000 Nm^3 (13,300 gal/MMscf)
- Electric power: 9.33 kWh/1000 Nm^3 (264 kwh/MMscf)
- Solvent loss: 35 g/1000 Nm^3 (2.1 lb/MMscf)

6.0 Input Stream

6.1 Inlet Gas Stream (Stream 1) - see Table B-8.

TABLE B-8. PURISOL GAS STREAM DATA*

Component	Stream 1 Sour Gas		Stream 2 Purified Gas		Stream 3 Acid Gas	
	Ref. (1)	Ref. (2)	Ref. (1)	Ref. (2)	Ref. (1)	Ref. (2)
H_2		64.53%		96.44%		
CO_2	15%	33.15%		0.10%	13.6%	
CO		1.50%		2.24%		
C_1		0.44%		0.59%		
N_2 + Ar		0.38%		0.63%		
H_2S	6%				2 ppm	
Temperature	7.38 MPa	317°K				
Pressure		1.38 MPa				
Flow Rate		2.83×10^6 Nm^3				

*The information contained in this table is for two different applications. Reference 1 is natural gas and reference 2 is for syngas. No complete description of all streams; e.g., sour gas, purified gas, and acid gas, for each type of application was given.

7.0 Discharge Stream

7.1 Purified Gas Stream (Stream 2) - Table B-8.

7.2 Acid Gas Stream (Stream 3)

7.3 Solvent Blowdown

8.0 Data Gaps and Limitations

Several gaps exist, they are as follows:

- No data on maximum allowable concentrations of various contaminants; e.g., CS_2, COS, mercaptans.
- No data on removal efficiency for various contaminants at various concentrations.

- No information on reliability and maintenance characteristics of process and facility.
- No information which would indicate applicability to coal gasification process.
- Characterization of gaseous and liquid streams for refinery/natural gas applications (temperature, pressure, composition, etc.).
- The effect that various contaminants (NH_3, carbonaceous matter, trace metals, etc.) have on the process, and the ultimate fate of such contaminants in the system.

9.0 Related Programs

No information available.

REFERENCES

1. Handbook of Gasifiers and Gas Treatment Systems, Dravo Corp. for ERDA, FE-1772-11, February 1976. p 120-121.
2. Gas Processing Handbook, Hydrocarbon Processing, Vol. 54, No. 4, April 1975.
3. Hochagesand, G., Rectisol and Purisol, Industrial and Engineering Chemistry, Vol. 62, No. 7, July 1970.
4. Beavon, D.K. and T.R. Roszkowski, Purisol Removes CO_2 from Hydrogen, Ammonia Syngas, The Oil and Gas Journal, 14 April 1969.
5. Kohl, A.L. and F.C. Riesenfeld, Gas Purification, Gulf Publishing Company, 1974.
6. Maddox, R.N., Gas and Liquid Sweetening, Campbell Petroleum Series, 1974.

ESTASOLVAN PROCESS

1.0 General Information

1.1 Operating Principle[1] - The physical absorption of the sour components of a gas stream (H_2S, CO_2, CO_2, COS, RSH, etc.) using an aqueous solution of tri-n-butylphosphate (TBP) as the solvent.

1.2 Development Status[1] - Commercially available.

1.3 Licensor/Developer - Institut Francais du Petrole
1 et 4, av. de Bois-Preau
92-RUEIL-MALMAISON
(Hauts-de-Seine) France

1.4 Commercial Application[1,3]*

- Natural gas desulfurization
- Natural gas desulfurization and liquid hydrocarbon recovery.

2.0 Process Information

2.1 Flow Diagram[1] - see Figure B-7.

- Sour feed gas, Stream 1, enters the bottom and lean solvent enters the top of the absorber. The sour gas passes counter-flow to the solvent. The purified product gas, Stream 2, exits the top, and the rich solvent exits the bottom of the absorber. The rich solvent is piped to the flashing step. Acid gas exits the top of the flashing vessel and the semi-lean solvent exits the bottom of the vessel. The solvent is then piped to a regenerator where the remaining acid components are boiled off. These components exit the top of the regenerator and combine with the acid gas stream from the flash vessel; the combined stream is then piped to sulfur

*As of May 1970 this process was untried in commercial applications. However, extensive pilot plant operation had been conducted in both France and West Germany. No information is available describing this process in a commercial operation.

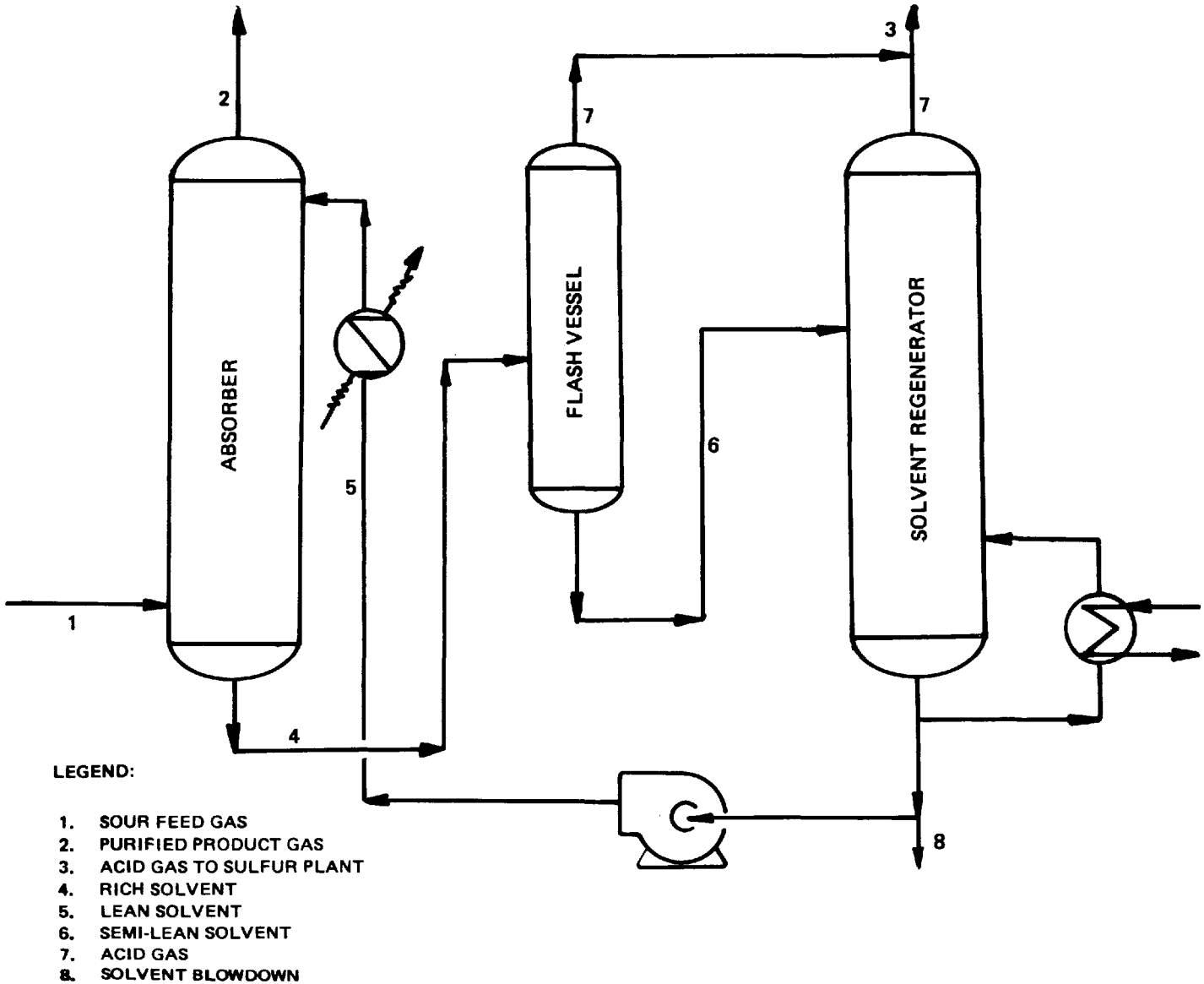

Figure B-7. Flow Diagram — Estasolvan Process

recovery. The lean solvent exits the regenerator and is pumped to the absorber.

2.2 Equipment

- Conventional absorbers, flash vessels and stripping columns.

2.3 Feed Stream Requirements

- Pressure: 1.0 MPa - 20 MPa (10-200 atm)
- Temperature: $253^{o}K$ - $333^{o}K$ ($-40^{o}F$ - $140^{o}F$)
- Others: ?

2.4 Operating Parameters

2.4.1 Absorption Step

- Temperature: $283^{o}K$ to $303^{o}K$ ($50^{o}F$ to $86^{o}F$)
- Pressure: 2.0 to 10.0 MPa (20 to 100 atm)
- Others: ?

2.4.2 Regeneration Step

- Temperature: $253^{o}K$ to $333^{o}K$ ($-4^{o}F$ to $140^{o}F$)
- Pressure: 1.0 to 20.0 MPa (10 to 200 atm)
- Others: ?

2.4.3 Stripping Step

- Temperature: $373^{o}K$ to $423^{o}K$ ($212^{o}F$ to $302^{o}F$)
- Pressure: 1 MPa to 0.5 MPa (1 to 4.8 atm)

2.5 Process Efficiency and Reliability[1]

- Pilot plant and design data indicate that process can reduce H_2S component of purified gas to 3 ppm. See Table B-9.

No information is available on reliability of a commercial plant.

2.6 Raw Material Requirements[3]

- Inert gas: 1200 Nm^3/hr (42,360 scf/hr)

TABLE B-9. STREAM DATA FOR TYPICALLY DESIGNED ESTASOLVAN PROCESS[1]

Composition	Percent by Volume		
	Feed Gas Stream 1	Purified Gas Stream 2	Acid Gas Stream 3
H_2S	10.0	3 ppm	85.75
COS- (mg/Nm^3)	500	6	0.65
RSH- (mg/Nm^3)	1500	50	
CO_2	7	6.4	11.40
N_2	7.5	8.0	--
CH_4	75.5	85.6	2.20
C_2+	Traces	--	--

Gas Flow Rate - 4 x 10^6 Nm^3/d (115 MMscfd)

Pressure - 6.9 MPa (1000 psig)

2.7 Utility Requirements[3]* - For a plant processing 75,000 Nm^3/hr (2.65 MMSCF/hr) of sour gas at a pressure of 7.0 MPa (995 psia) and temperature of 303°K (86°F)

- Steam at 0.34 MPa (35 psig) 1996 Kg/hr (4400 lb/hr)
- Cooling water 75,700 liters (20,000 gph)
- Electric power 1200 kwh

2.8 Miscellaneous - No information available.

3.0 Process Advantages[1,3]

- Solvent has low specific gravity
- Solvent has low viscosity even at low operating temperatures
- Solvent has low vapor pressure
- Solvent has low foaming tendency

*This information is taken from pilot plant operation. No information available for actual operating commercial facility.

- Solvent has no toxicity
- Solvent is noncorrosive.

4.0 Process Limitations[1]

- Partial pressure of H_2S should be greater than 0.27 MPa (40 psia) and preferably 0.34 MPa (40 psia).*

- Gas with high CO_2 content may require a separate CO_2 removal process. Under normal operating conditions solvent absorbs hydrocarbons. As process is adjusted for high CO_2 removal by increasing the TBP concentration in the absorption solvent the amount of C_1, C_2, and C_3 removed will be increased.

- The gas stream compositions which are most efficiently treated by the Estasolvan process are given in Table B-10.

5.0 Process Economics[1]

- Studies indicated that this process will be 10 to 15 percent less expensive than chemical absorption, provided the partial pressure of H_2S in the feed gas is in excess of 0.27 MPa (40 psia).

6.0 Input Streams[1] - see Figure B-7.

- Sour feed gas (Stream 1) - see Table B-9.

7.0 Discharge Stream[1] - see Figure B-7.

- Purified gas stream (Stream 2) - see Table B-9.
- Acid gas stream (Stream 3).

TABLE B-10. GAS STREAM MOST EFFICIENTLY TREATED BY THE ESTASOLVAN PROCESS[2]

Constituents	Vol. %
Methane	50-90
Hydrogen Sulfide	1-25
Ethane and higher hydrocarbons	1-25
Other gases such as steam, nitrogen, CO_2, mercaptans, CO, COS and hydrogen	0-40

*Corresponds to gas at operating pressure of 6.9 MPa (1000 psig) with H_2S content of 4 to 5 percent.

8.0 Data Gaps and Limitations

- Data supplied above is from pilot plant operation and design information; no information was obtained for a commercial plant. Due to this fact, reliability and commercial process plant efficiency are not reported.

- Data gaps exist in the following areas:

  - Applicability of the process to coal conversion processes; e.g., efficiency, reliability, and feed stream requirements. Characterization of gaseous and liquid streams (e.g., purified gas, feed gas, acid gas, and sludge) for refinery/natural gas commercial applications.

  - Definition of the maximum allowable concentrations of various contaminants in the feed gas; e.g., COS, CS_2, NH_3, and mercaptans.

  - The effect that various contaminants (NH_3, carbonaceous matter, trace metals, etc.) have on the process, and the ultimate fate of such contaminants in the system.

9.0 Related Programs

No data available.

REFERENCES

1. Franckowiak, S. and Nitschke, E., Estasolvan: New Gas Treating Process, Hydrocarbon Processing, May 1970.

2. Strecher, P.G., Hydrogen Sulfide Removal Processes, Noyes Data Corporation, 1972.

3. New Process Has Wide Scope, Oil and Gas Journal, 20 May 1968.

FLUOR SOLVENT PROCESS

1.0 General Information

1.1 Operating Principles[1] - The physical absorption of the sour components (CO_2, H_2S, etc.) from a gas stream using propylene carbonate as the sorbent.*

1.2 Development Status - Commercially available.

1.3 Licensor/Developer - The Fluor Engineers and Constructors
3333 Michelson Drive
Irvine, California 92730

1.4 Commercial Applications - Process is presently used in 9 plants[6].

- Five in natural gas application
- One in hydrogen production
- Three in ammonia production

Table B-11 gives a list of seven plants using the Fluor process with their respective owners and locations.

2.0 Process Information

2.1 Flow Diagram (see Figure B-8)[3] - The sour feed gas, Stream 1, and hydrocarbon containing flashed gas, Stream 6, are combined and injected at the bottom of the absorber. The lean solvent enters at the top of the absorber. Purified product gas, Stream 2, and rich solvent, Stream 4, exits the top and bottom of the absorber, respectively. The solvent is let down through hydraulic turbines. The acid gases containing some evolved hydrocarbons, Stream 6, are

*The process is primarily used for the removal of CO_2 and CO_2-H_2S from high-pressure natural gas or synthesis gas. However, by proper selection of the operating conditions, it can also be used for selective removal of H_2S from gases that contain both CO_2 and H_2S.

TABLE B-11. SITES WHERE FLUOR SOLVENT IS USED IN GAS TREATMENT[2]

Location	Plant Owner	Application	Through-Put
Lost Hills, California	Standard Oil Co. of California	Natural gas treating	230,000 Nm^3/d (10 MMSCFD)
Grand County, Utah	Sinclair Oil and Gas	Natural gas CO_2 removal	566,000 Nm^3/d (20 MMSCFD)
Trinidad	W.R. Grace	Synthesis gas (MH_3) CO_2 removal	1909 Tonnes MH_3/d (1200 tons/day)
Terrell County, Texas	El Paso Natural Gas	Natural gas CO_2 removal	Not reported
Pecos County, Texas	El Paso Natural Gas	Natural gas treating	2.5×10^6 Nm^3/d (88 MMSCFD)
Bedrijven, Belgium	Union Chemique Chemische	Synthesis gas sulfur removal	Not reported
Pascagoula, Mississippi	Standard Oil Co.	Hydrogen plant	Not reported
Woodward, Oklahoma	W.R. Grace	Synthesis Gas (MH_3) CO_2 removal	1090 Tonnes MH_3/d (1200 tons/day)
Pecos County, Texas	Intratex Gas Company	Natural gas	2.8×10^6 nm^3/d (100 MMSCFD)

recycled to the absorber and the rich solvent is sent to the stripping column for regeneration.* The regenerated solvent, Stream 5, is pumped back to the absorber, and the acid gas evolved in the stripper, Stream 3, is sent to the sulfur recover, flared or vented, depending on acid gas composition.

2.2 Equipment - Conventional absorbers, flash vessels and stripping columns.

*Depending on the application and operating conditions, the stripping step may be eliminated and the flashed solvent directly returned to the absorber for reuse.

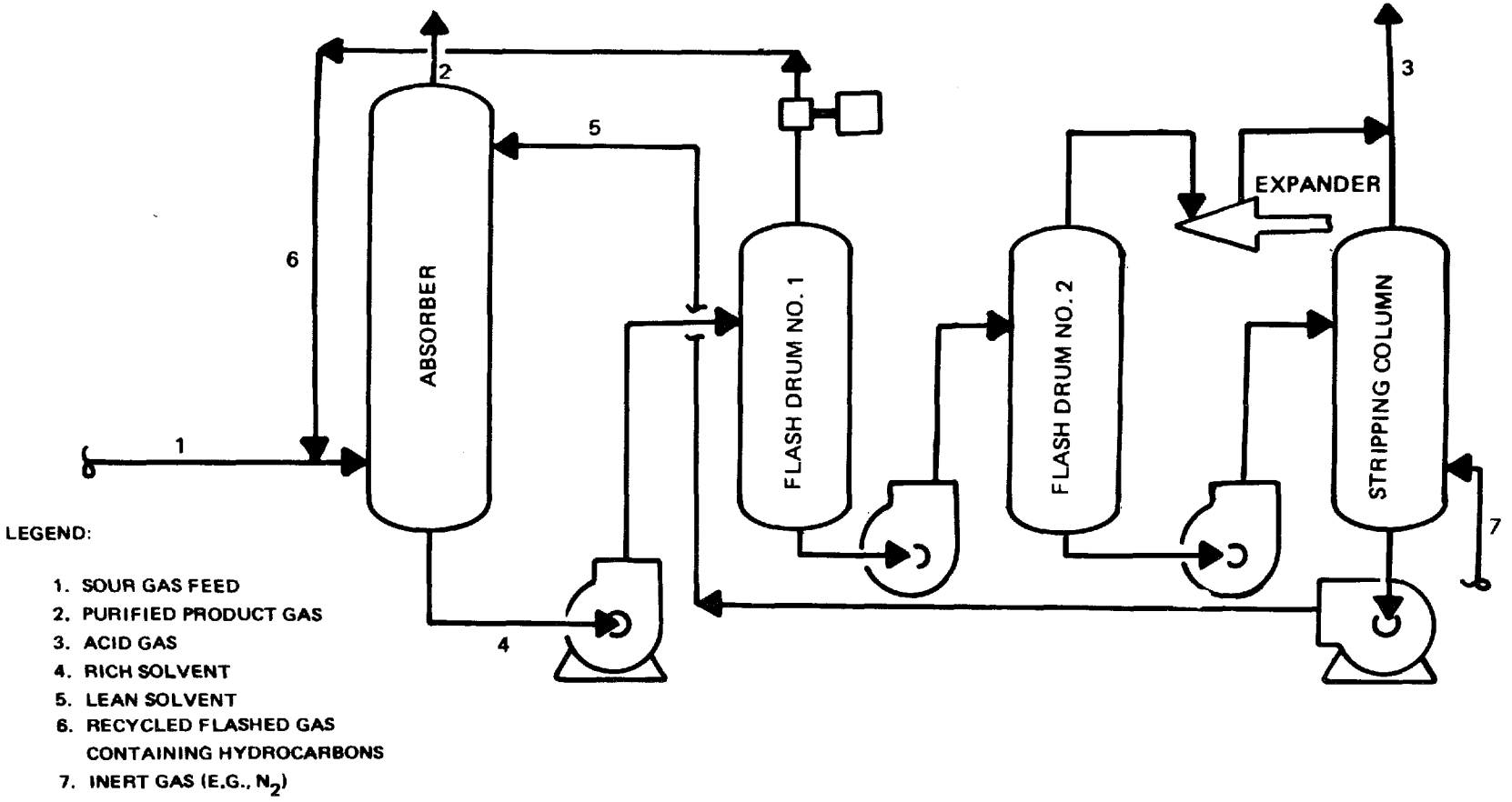

Figure B-8. Fluor Solvent Processes

2.3 Feed Stream Requirements[6]

Temperature: Not critical

Pressure: Acid gas partial pressure ≥ 0.5 MPa (75 psia)

2.4 Operating Parameters[6]

- Absorption Step:

  Temperature: Ambient or below

  Pressure: Acid gas partial pressure ≥ 0.5 MPa (75 psia)

  Solvent loading: ?

- Stripping Column:

  Temperature: Typically 269°K (25°F)

  Pressure: Atmospheric

2.5 Process Efficiency and Reliability[1,4]

- In treating natural gas, the process can produce a product of pipeline specifications.
- Over 15 years of commercial application.

2.6 Raw Material Requirements

- Chemicals: (Solvent makeup, etc.)
- Inert gas (e.g., N_2):

2.7 Utility Requirements

- Water: Little or none
- Electricity: Normally low, depends upon acid gas content
- Steam: ?

2.8 Miscellaneous - Available information indicates no unusual maintenance problems, or potential hazardous conditions created by process.

3.0 Process Advantages

- Feed gas is dehydrated as acid gas is removed.
- Low vapor pressure at operating temperature which minimizes solvent losses[4].
- Solvent has a low viscosity which minimizes pumping costs[3].
- Solvent has good thermal and chemical stability[3].

- Solvent is noncorrosive which allows the use of carbon steel throughout process[1].
- Solvent is readily available[2].
- Solvent reclamation is not required.

4.0 Process Limitations

- Solvent absorbs heavy hydrocarbons[4].
- Refrigeration may be required because solvent carrying capacity is increased at lower temperatures (see Table B-12)[3]. However, partial or complete energy requirements may be provided by flashing of the acid gas[6].
- Inert gas stripping, or vacuum flashing may be required for solvent regeneration[3].

5.0 Process Economics

The cost of treating a synthesis gas containing 32 vol. % CO_2 is approximately \$1.70/tonne (\$1.55/ton) of carbon dioxide removed* in 1969 dollars[5].

TABLE B-12. SOLUBILITY OF CO_2 IN PROPYLENE CARBONATE[3]

	CO_2 Pressure MPa (psig)			
	0.51 (60)	1.5 (200)	2.8 (400)	4.2 (600)
Nm^3 CO_2/m^3 soln at 300^oK (scf CO_2/cf soln at 80^oF)	16 (17)	50 (52.5)	102 (107)	212 (223)
Nm^3 CO_2/m^3 soln at 278^oK (scf CO_2/cf soln at 40^oF)	26 (26.5)	89 (90.0)	311 (327)	∞

*Licensor cautions that these data are not to be used for design purposes.

*This cost includes royalty fees, capital investment, utilities cost, labor, and various fixed charges.

6.0 Input Streams

- Sour feed gas stream, Stream 1, see Table B-13.
- Inert gas stream, Stream 7. Only required to achieve very low acid gas in the treated gas.

7.0 Discharge Stream

- Purified product gas (Stream 2) - See Table B-13.
- Acid gas stream (Stream 3) - No data available.

TABLE B-13. EXAMPLE STREAM DATA FOR FLUOR PROCESS*[4]

Plant Capacity	2150 Nm^3/min (110 MMSCFD) feed gas
Feed Gas Pressure	5.5 MPa (800 psig)
Feed Gas Composition:	
CO_2	53.2% by volume
N_2	0.7% by volume
CH_4	45.7% by volume
C_2H_6	0.4% by volume
H_2S	nil
Mercaptans	nil
H_2O	294°K (70°F) dewpoint
Treated Gas Specifications:	
CO_2	2% maximum (without stripper)
H_2O	273°K (32°F) maximum dewpoint

*These requirements are for plants designed to primarily reduce CO_2 content of purified gas.

8.0 Data Gaps and Limitations

- Applicability to coal conversion processes.
- Applicable feed gas stream requirements
  - Temperature and pressure ranges
  - Concentration of various contaminants
- The effect that contaminants such as NH_3, carbonaceous matter, trace minerals, etc., have on the process and the ultimate fate of such contaminants in the system.
- Operating parameters of various stages of the process.
- Characterization and volume of various discharge streams (e.g., blowdown, acid gas).
- Process Economics
  - Typical utilities cost or usage
  - Inert gas requirements
  - Solvent makeup requirement
  - Other operating costs

9.0 Related Programs

No information available.

REFERENCES

1. Gas Processing Handbook, Hydrocarbon Processing, April 1975.
2. Buckingham, P.A., Fluor Solvent Process Plants: How They Are Working, Hydrocarbon Processing and Petroleum Refiner, Vol. 43, No. 4, April 1964.
3. Maddox, R.N., Gas and Liquid Sweetening, Campbell Petroleum Series, 1974.
4. Kohn, A.L., and Buckingham, P.A., Fluor Solvent CO_2 Removal Process, Petroleum Refiner, May 1960.
5. Cook, T.P., and Tennyson, R.N., Improved Economics in Synthesis Gas Plant, Chemical Engineering Progress, Vol. 65, No. 11, November 1969.
6. Information provided to TRW by R. L. Schendel of Fluor Engineers and Contractors, March 7, 1978.

SULFIBAN (MEA) PROCESS*

1.0 General Information

1.1 Operating Principle - Absorption of H_2S and organic sulfur compounds from a gas stream using an aqueous solution of monoethanolamine (MEA) as the sorbent.

1.2 Development Status - Commercially available.

1.3 Licensor/Developer - Applied Technology Corporation
4242 S.W. Freeway
Houston, Texas 77027

1.4 Commercial Applications - The Sulfiban process has been used to desulfurize refinery gas, coke oven gas, synthesis gas, natural gas and hydrogen. Approximately 100 units have been constructed treating a combined gas volume total of 4.7×10^7 Nm^3/d (1.73×10^9 SCFD) with individual plant capacities ranging from 5300 Nm^3/d to 5.26×10^6 Nm^3/d (0.2 to 200 MMSCFD)[1].

2.0 Process Information

2.1 Flow Diagram (see Figure B-9)

- Sour feed gas (Stream 1) enters the bottom of the absorber and the lean amine solution† (Stream 5) enters the top. The purified product gas (Stream 3) exits the top of the absorber and the rich amine solution (Stream 4) which exits the bottom is pumped to a stripping column where it is heated and the chemical reaction is

*The Sulfiban process is a patented variation of the basic ("standard") monoethanolamine (MEA) system which incorporates the use of a variety of proprietary chemicals to minimize sorbent degradation and to control corrosion. The basic "MEA System" was developed in the 1920's; the Sulfiban process has been in use since 1954[1,2].

†The lean amine solution is an aqueous solution of 12% - 20% by weight monoethanolamine.

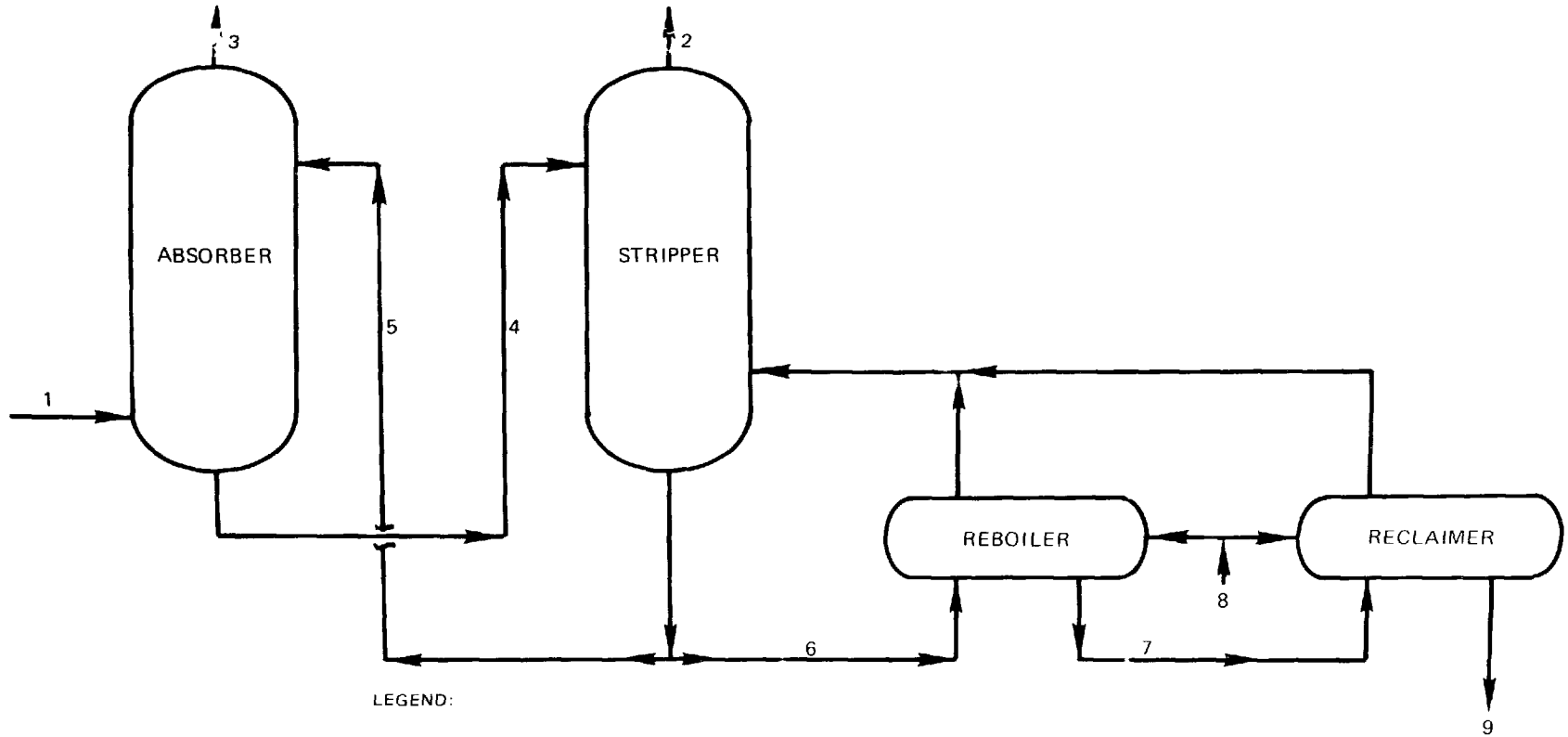

LEGEND:

1. FEED GAS STREAM
2. ACID GAS TO TREATMENT
3. PURIFIED PRODUCT GAS
4. RICH AMINE SOLUTION
5. LEAN AMINE SOLUTION TO ABSORBER
6. LEAN AMINE SOLUTION TO RE-BOILER
7. RECLAIMER FEED
8. STEAM
9. DEGREDATION PRODUCTS

Figure B-9. Sulfiban Process

reversed.* Acid gases evolved (Stream 2) exit the top of the stripper and are piped to acid gas treatment (for recovery of sulfur, sulfuric acid, or pure H_2S) and the lean amine (Stream 5) is returned to the absorber.

2.2 Equipment - Absorber column, stripping column reboiler, and reclaimer.

2.3 Feed Stream Requirements[3]

- Temperature: 289^oK to 311^oK (60^oF to 110^oF)
- Pressure: Atmospheric

2.4 Operating Parameters[1]

2.4.1 Absorption Step:

- Temperature: 311^oK (100^oF)
- Pressure: 0.1 to 6.9 MPa (0 to 1015 psia)
- MEA concentration: 12% to 20% by weight in water
- MEA circulation rate: Dependent on gas flow and composition

2.4.2 Stripping Step:

- Temperature: 366^oK to 394^oK (200^oF to 250^oF)
- Pressure: 0.15 to 0.17 MPa (22 to 25 psia)

2.4.3 Redistillation Step:

- Temperature: 394^oK to 422^oK (250^oF to 300^oF)
- Pressure: 0.15 to 0.17 MPa (7 to 10 psia)

2.4.4 Reclaimer - High temperature is employed to minimize degradation and maximize sorbent recovery.

---

*The primary reactions of MEA with H_2S and CO_2 are as follows[3]: H_2S absorption solvent regeneration (RNH_2 = monoethanolamine) reactions:

- $2\ RNH_2 + H_2S = (RNH_3)_2S$ and
- $(RNH_3)_2S + H_2S = 2\ RNH_3HS$

CO_2 absorption solvent regeneration reactions:

- $2\ RNH_2 + H_2O + CO_2 = (RNH_3)_2\ CO_3$ and
- $(RNH_3)_2CO_3 = H_2O + CO_2 + 2\ RNH_3HCO_3$ or
- $2\ RNH_2 + CO_2 = RNHCOONH_3R$

2.5 Process Efficiency and Reliability - For an inlet H_2S loading of 12.5 grams/Nm^3 (500 gr/100 scf) to the Sulfiban unit, the overall removal efficiency for the combined Claus-Sulfiban treatment system can range from 87% to 98%[4,5]. The basic "MEA System" and the Sulfiban system have been in use for approximately 50 years and 25 years, respectively; they have proven to be reliable gas purification systems.

2.6 Raw Material Requirement[4]

Amine: 136 to 408 kg/day (300 to 900 lbs/day)*

2.7 Utility Requirements

Cooling water:	67 to 200 ℓ/sec (1060 to 3180 gpm)*
Power:	1300 to 4148 kwh/day*
Steam:	4900 to 14,800 kg/hr (10,913 to 32,746 lbs/hr)*

2.8 Miscellaneous - No information available which indicates special maintenance problems or unusual hazardous condition created by the process.

3.0 Process Advantages

- Not pressure sensitive[1]
- Low solvent cost[2]
- Can remove COS and CS_2 in addition to H_2S[5]
- High carrying capacity for acid gases[3]
- Does not remove hydrocarbons from feed gas[1]
- Compatible with HCN in feed gas[5].

4.0 Process Limitations

- Feed gas temperature must be no greater than 316°K (110°F)[1].
- HCN in the feed gas causes some degradation of solvent.
- Reclaimer sludge requires proper handling and disposal.

*Based upon 12.5 grams H_2S per Nm^3 (500 gr H_2S/100 scf) at inlet and a 98% efficient Sulfiban system; the plant sizes are 0.52 to 1.6 million Nm^3/day (20 MMSCFD and 60 MMSCFD), respectively.

5.0 Process Economics[4]

In late 1974 it was estimated that a Sulfiban plant handling 1.6 million Nm^3/d (60 MMscfd) would cost between \$1.00 to \$3.00 per 1000 Nm^3 (3.91¢/MSCF to 7.60¢/Mscf) for 90% and 98% removal efficiencies, respectively (1975 dollars).*

6.0 Input Streams - see Table B-14.

- Feed gas stream (Stream 2)
- Steam (Stream 8)
- Solvent makeup: 255 kg/Nm^3 (15 $lbs/10^6$ scf)

7.0 Discharge Streams - see Table B-14.

- Purified product gas (Stream 3)
- Acid gas (Stream 2)
- Sludge blowdown (Stream 7)

TABLE B-14. STREAM INFORMATION FOR A SULFIBAN PROCESS TREATING COKE OVEN GAS WITH A PLANT THROUGH-PUT OF 1.6 x 10^6 Nm^3/DAY (60 MMSCF) AND SULFIBAN EFFICIENCY OF 98%[4]

Stream Number	Stream Name	Stream Composition
1	Feed Gas	12.5 gm H_2S/Nm^3 (500 gr H_2S/100 scf) 1.5 gm HCN/Nm^3 (60 gr HCN/100 scf)
2	Acid Gas	50% H_2S 4% HCN 46% CO_2
3	Product Gas	250 mgm H_2S/Nm^3 (10 gr/100 scf)
7	Sludge/Degradation Products	140 l/day (37 gal/day)
8	Steam	327,000 kg/day of 1.12 MPa steam (720,000 #/day of 150 psig steam)

*No indication as to whether this cost includes royalty fees.

8.0 Data Gaps and Limitations

- Limited data are available on the maximum allowable concentrations of various contaminants in the feed gas (e.g., COS, CS_2, trace metals, carbonaceous matter, NH_3, COS, CS_2, HCN) have on the process, and the ultimate fate of such contaminants in the system.

- No data are available on the composition/properties of reclaimer sludge/degradation products.

9.0 Related Programs

No data available.

REFERENCES

1. Dravo Corporation, Handbook of Gasifiers and Gas Treatment Systems, ERDA FE-1772-11, Washington, D.C., February 1976.

2. Riesenfeld, F.C. and Kohl, A.C., Gas Purification, Second Edition, Gulf Publishing Co., Houston, Texas, 1974.

3. Maddox, R.N., Gas and Liquid Sweetening, Campbell Petroleum Series, 1974.

4. Massey, M.J. and Dunlap, R.W., Economics and Alternatives for Sulfur Removal from Coke Oven Gas, Journal of the Air Pollution Control Association, Vol. 25, No. 10, October 1975.

5. Information provided to TRW by W. M. Peters of Applied Technology Corporation, February 27, 1978.

MDEA PROCESS

1.0 General Information

1.1 Operating Principle - Chemical absorption of acid gases (H_2S, organic sulfides and CO_2) from industrial gases using methyldiethanolamine (MDEA) as the sorbent. The process is highly selective toward H_2S* (in the presence of CO_2), and can also be modified to remove substantial quantities of COS[1].

1.2 Development Status - Commercially available.

1.3 Licensor/Developer - Dow Chemical Company
Freeport, Texas 77541

1.4 Commercial Applications - Three or four U.S. refineries have converted their amine systems (MEA/DEA) to MDEA and one commercial plant is under construction[1]. Location of facilities and operating parameters not reported.

2.0 Process Information

2.1 Flow Diagram (see Figure B-10) - The raw gas (Stream 1) enters the bottom of the absorber while a lean solution of MDEA (Stream 3) is delivered to the top. The lean solution absorbs most of the H_2S and some CO_2 as it passes counter-current to the gas. The treated gas (Stream 2) exits at the top of the absorber. The rich solution (Stream 4) flows to the stripper for regeneration. The acid gases (Stream 9) go to sulfur recovery. A sidestream of the lean solution (Stream 10) is sent to a distillation unit for purification. The remainder of the lean solution is returned to the absorber.

*The degree of selectivity is affected by the partial pressure of CO_2 in the gas stream, solvent loading, and the temperature in the absorption unit (see Section 4.0).

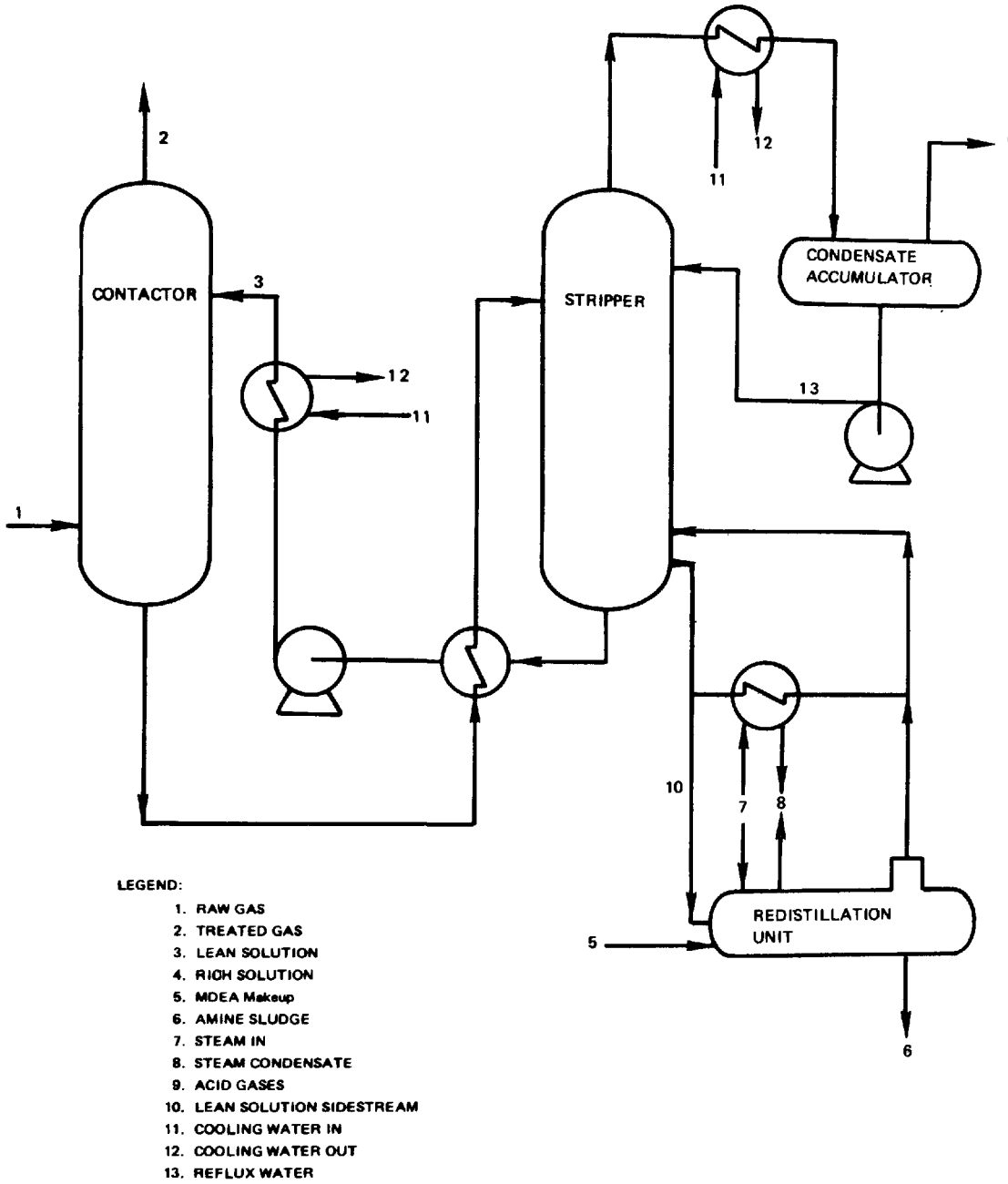

Figure B-10. MDEA Acid Gas Removal Process[2]

2.2 Equipment - Conventional contactor, stripping column, and stripper reboiler[2].

2.3 Feed Stream Requirements[1]

- Temperature: 288°K to 323°K (60°F to 120°F)
- Pressure: Atmospheric or greater

2.4 Operating Parameters

2.4.1 Absorber

- Temperature: 300°K to 325°K (80°F to 125°F)[1]
- Pressure: 0.1 to 0.7 MPa (0 to 1000 psig)[1]
- Solvent loading: Usually less than 0.03 Nm^3 acid gas/ℓ (3.2 scf acid gas/gal)[2]. Some commercial applications have involved loading of 30% MDEA to 0.7 Nm^3 of acid gas/ℓ (7.9 scf/gal)[4].

2.4.2 Stripper[1]

- Temperature: 388°K to 393°K (240°F to 250°F)
- Pressure: 0.14 to 0.17 MPa (7 to 10 psig)

2.4.3 Redistillation Unit[4]

- Temperature: 393°K to 423°K (250°F to 350°F)
- Pressure: 0.14 to 0.17 MPa (up to 10 psig)

2.5 Process Efficincy - H_2S in treated gas can be reduced to less than 4 ppm. The exact amount of H_2S, CO_2 and other acid gases removed depends upon actual operating conditions*[1,3].

2.6 Raw Material Requirements

- MDEA solvent makeup: 9 g/1000 Nm^3 of sour gas (0.5 lb/MMSCF)[1].
- Foam inhibitors: Dow Corning DB-31, Exxon-Corexit 350.

2.7 Utility Requirements[1] - Basis: 28,3000 Nm^3 (MM scf) gas at 314°K (105°F) and 0.41 MPa (60 psia).

*In applications where selective removal of H_2S from a sour gas stream is a major objective the following can be obtained: Streams of 92% to 95% pure H_2S can be produced while producing sweet gas with from 5 to 30 ppm H_2S and retaining 60% to 70% of the CO_2. Best results are achieved when the absorber is operating at high solvent loading and short contact times(2).

2.7.1 Case 1: Gas feed composition of 0.6 volume % H_2S and 10 volume % CO_2 with 50 ppmv H_2S and 3.3 volume % CO_2 in treated gas.

- Steam: 4900 kg (10,700 lb)
- Cooling water: ?
- Electricity: 15 kWh

2.7.2 Case 2: Gas feed composition same as above, but 965 ppmv H_2S and 7.3 volume % CO_2 in treated gas.

- Steam: 2270 kg (5000 lb)
- Cooling water: ?
- Electricity: 8 kWh

2.8 Miscellaneous - No information available which indicates special maintenance problems or unusual hazardous conditions created by the process.

3.0 Process Advantages

- Removes most sulfur compounds without solvent degradation[1,3].
- Can be operated over a wide range of pressure[1,3].
- More selective than most amines in the preferential removal of H_2S[2].
- Lower energy requirements than most chemical type processors[1].
- In the stripping operation reflux rates as low as 0.7 kg H_2O/kg acid gas (0.7 lb H_2O/lb acid gas) can be used without noticeably increasing the H_2S in the sweet gas[2].

4.0 Process Limitations[2]

- Process selectivity for H_2S is maintained in contactor operating from 0.45 to 1.7 MPa (50 to 250 psi) and having 2% to 24% CO_2.
- Selectivity decreases markedly after a critical solvent loading level is surpassed. Pilot plant studies indicate the critical loading to be approximately 0.03 Nm^3 acid gas/ℓ (3.2 scf acid gas/gal).
- Selectivity is sensitive to temperature of lean amine entering the absorber. Pilot plant studies indicate absorber temperature should be less than 316°K (110°F).

- Potential corrosion problems exist at high MDEA concentrations (>45%) and high loadings (>0.5 moles acid gas/mole MDEA).
- Some potential foaming problems can occur requiring the use of foam inhibitors.

5.0 Process Economics

No data available.

6.0 Input Streams (see Figure B-10)

6.1 Raw Gas (Stream 2) - see Table B-15.

6.2 MDEA Makeup (Stream 6)[4]: - 8.5 kg MDEA/Nm^3 (0.51 lbs MDEA/10^6 scf)

7.0 Discharge Streams

7.1 Treated Gas (Stream 2) - see Table B-15.

7.2 Acid Gas (Stream 9) - The acid gas produced during regeneration is composed primarily of CO_2, H_2S, organic sulfur and some hydrocarbons. This stream will require further processing in a sulfur recovery unit, such as a Claus or Stretford.

TABLE B-15. OPERATING DATA AND STREAM CHARACTERISTICS FOR THE APPLICATION OF A MDEA PROCESS IN A REFINERY SETTING[2]

Absorber Size	• 1.83 m (6 ft) in diameter • 20 type A Koch Flexitrays at 0.61 m (24 in.) spacing
Absorber Parameters	• Solvent temperature: 316°K (110°F) • Pressure: 0.63 MPa (78 psig) • MDEA concentration: 15 wt % • Solvent loading: approximately 0.03 Nm^3 acid gas/ℓ (3.0 scf acid gas/gal)
Feed Stream Composition - Stream 1	H_2S - 8.5% CO_2 - 1.4% H_2 - 38% CH_4 - 21.5% C_2H_6 - 12%
Product Gas Acid Components - Stream 2	CO_2 - approximately 64% of original CO_2 H_2S - 7 ppm

7.3 Amine Sludges (Stream 6) - Stream composed mainly of solvent with traces of degradation products and other components scrubbed from gas stream. Quantitative rate and actual composition of this stream not known.

8.0 Data Gaps and Limitations

- Process applicability to coal conversion process gas purification systems not established.
- No data on composition of by-product acid gas.
- No data available on maximum allowable concentrations of various contaminants in the feed stream (COS, CS_2, NH_3, HCN, mercaptans, etc.).
- The effects that various contaminants (NH_3, carbonaceous matter, trace metals, etc.) have on the process, and the ultimate fate of such contaminants in the system.
- Characterization of gaseous and liquid streams for natural gas and/or refinery applications (temperature, pressure, composition, etc.).

9.0 Related Programs

Pilot plant tests have been conducted with the MDEA process for sweetening simulated gases which are typical of those produced by coal gasification from a Koppers-Totzek gasifier[4].

REFERENCES

1. Dravo Corporation, Handbook of Gasifiers and Gas Treatment Systems, Final Report. Task Assignment No. 4 Report FE-1772-11, ERDA Contract No. E(49-18)-1772, Pittsburgh, PA, Chemical Plants Division, February 1976.

2. Vidaurri, F.C. and Kahre, L.C., Recover H_2S Selectively from Sour Gas Streams, Hydrocarbon Processing, November 1977.

3. Frazier, H.D. and Kohl, A.L., Selective Absorption of Hydrogen Sulfide from Gas Streams, Industrial and Engineering Chemistry, November 1950.

4. Information provided to TRW by R. L. Pearce of Dow Chemical Company, March 3, 1978.

SNPA — DEA PROCESS

1.0 General Information

1.1 Operating Principle - The chemical absorption of acid impurities (H_2S, CO_2, COS, CS_2, etc.) of a gas stream using diethanolamine (DEA) as the sorbent.

1.2 Development Status - Commercially available.

1.3 Licensor/Developer

- Developer - Société Nationale Elf d'Aquifaine (Production)
- U.S. Licensor - The Ralph M. Parsons Co.
  100 W. Walnut Street
  Pasadena, California 91124

1.4 Commercial Applications - The SNPA — DEA process has been used exclusively in sour natural gas treatment to remove H_2S and CO_2; the total world capacity of the process is approximately 125 million Nm^3 (4.2 billion scf) per day[1]. There is no present commercial application to acid gases generated in coal gasification.

2.0 Process Information

2.1 Flow Diagram (see Figure B-11) - Raw gas (Stream 1) is contacted counter-currently with lean DEA solution in a contactor where the acid gases are removed. Purified product gas (Stream 2) exits the top of the contactor. Rich solvent (Stream 4) exits the bottom of the contactor and is flashed to remove dissolved and entrained hydrocarbons. From the flash tank, the rich DEA is heated and then charged to the stripper. In the stripper the acid gases are stripped from the DEA solution, then cooled and the acid gas is evolved (Stream 8). Lean solution exits the bottom of the stripper and is

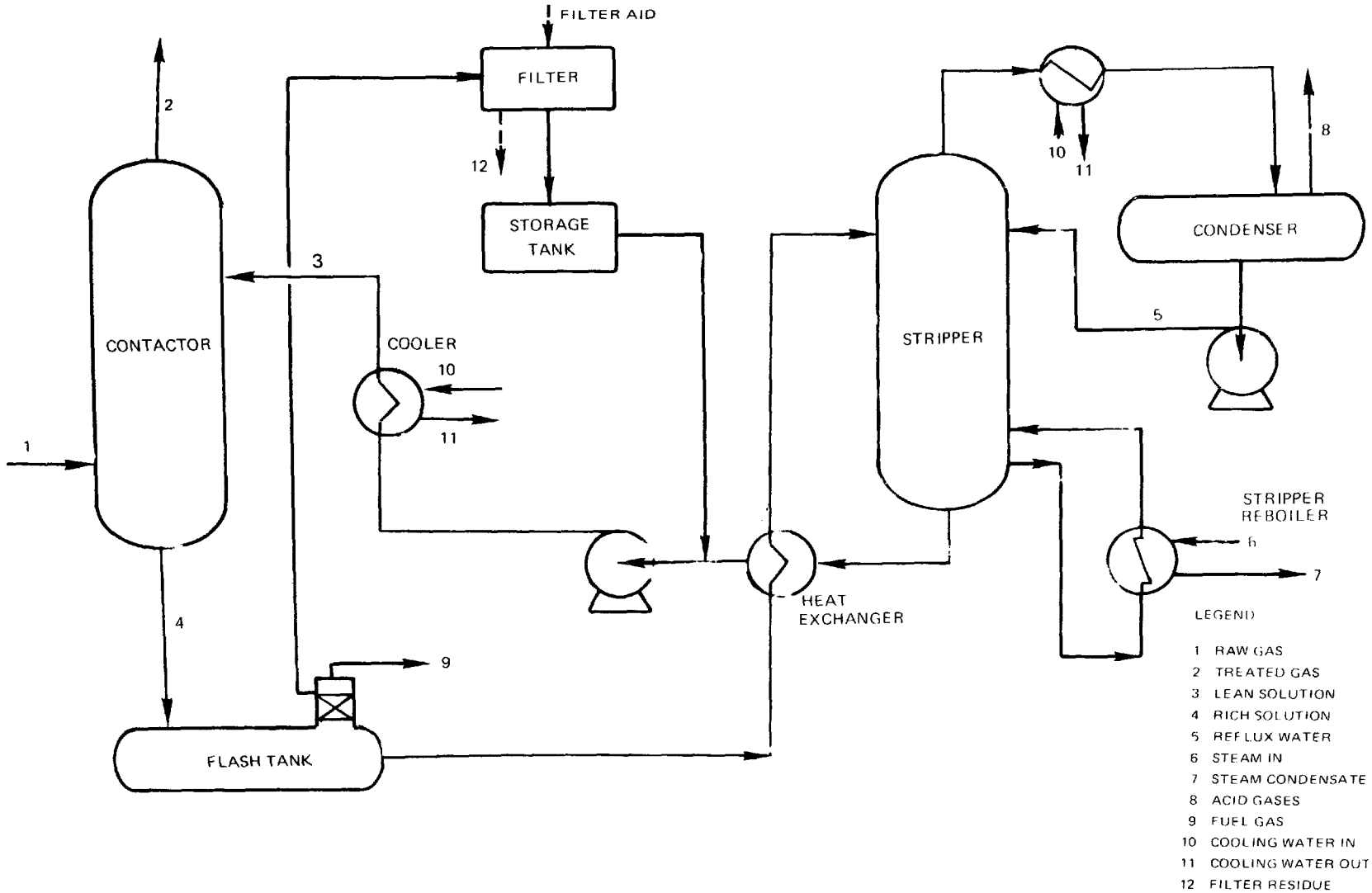

Figure B-11. SNPA-DEA Acid Gas Removal Process

cooled before returning to the contactor (Stream 3). Solution storage and conditioning* are provided on the lean DEA stream.

2.2 Equipment - Conventional contactor, flash vessel, stripping column and stripper reboiler.

2.3 Feed Stream Requirements[6]

Temperature: $300^{o}K$ to $330^{o}K$ ($77^{o}F$ to $130^{o}F$)

Pressure:* 2 to 15 MPa (300 to 2250 psia)

2.4 Operating Parameters[6]

2.4.1 Absorption Step

- Temperature: $523^{o}K$ to $343^{o}K$ ($480^{o}F$ to $160^{o}F$)
- Pressure: 2 to 15 MPa (300 to 2250 psia)
- Solvent Loading: ?

2.4.2 Regeneration Step

- Temperature: $383^{o}K$ to $393^{o}K$ ($230^{o}F$ to $250^{o}F$)
- Pressure: 0.14 to 0.2 MPa (21 to 30 psia)

2.4.3 Flash Vessel

- Temperature: $523^{o}K$ to $533^{o}K$ ($160^{o}F$ to $176^{o}F$)
- Pressure: 0.3 to 0.5 MPa (44 to 74 psia)

2.5 Process Efficiency and Reliability - Treated gas will meet the conventional pipeline specification of 0.25 grain H_2S per 100 scf maximum and CO_2 of 2 volume % or less[3].

2.6 Raw Material Requirements

- DEA Makeup: Approximately 30 to 140 kg/1000 Nm^3 (2 to 9 lb/MMscf)[1].

*Conditioning consists of solvent filtration for the removal of trapped impurities (liquid hydrocarbon, pipe scale, glycol, corrosion products and well head additives)[1]. Activated carbon may also be used in conjunction with filtration to improve solvent rejuvenation.

†Partial pressure of the acid gas in the feed stream must be at least 0.4 MPa (59 psia)[2].

- Filter aids (activated carbon, etc.): ?
- Blanketing Gas[6] - Nitrogen or oxygen free gas.
- Foam Inhibiter: Typical silicone fluid.

2.7 Utility Requirements[6]

- Electricity: Depends on design (e.g., availability of high pressure steam for driving pumps).
- Water: Depends on operating conditions (e.g., feed temperature and moisture content)
- Steam: 0.08 to 0.18 kg/ℓ (0.7 to 1.5 lbs/gal) of circulated solution for reboiling.

3.0 Process Advantages

- Greatest advantage is in treating raw gases having high acid gas concentrations, at high pressures.
- Utility requirements for a DEA unit generally run substantially below those required for MEA units.
- COS is removed without DEA degradation.

4.0 Process Limitations[1]

- Process is not effective at low pressures.
- Conditioning of lean solvent is required.
- Gas blanketing of the pure DEA solution during storage may be necessary to prevent oxygen degradation of the solution.
- Royalty fees are required.
- Potential foaming problems exist which requires the use of foam inhibitors and an anti-foam-injection facility.
- Potential corrosion problems exist in the rich solution piping downstream of large pressure reduction stations. Expected life of pipe in this area has been reported to be approximately 3 to 4 years[1].
- Corrosion problems may occur in the lean solution heat exchanger which will require the use of stainless steel rather than carbon steel tubes[1].

5.0 Process Economics

No data available.

6.0 Input Streams (see Figure B-11)

6.1 Raw Gas (Stream 1) - see Table B-16.

6.2 Filter Aids (activated carbon, etc.) - Dosages/quantities not known.

6.3 Foam Inhibitor - (Not shown in Figure B-11.)

7.0 Discharge Streams (see Figure B-11)

7.1 Treated Gas (Stream 2) - see Table B-16.

7.2 Acid Gas (Stream 8) - Acid gases removed from raw gas are at adequate pressures and proper temperature to serve as a direct feed for a Claus-type sulfur recovery unit. No data available on the composition of this stream[2].

7.3 Fuel Gas (Stream 9) - Usually low grade fuel, no data available on the composition and generation rate for this stream.

7.4 Filter Residue - Stream usually contains various small particles (e.g., iron sulfide, liquid hydrocarbons, reaction products and

TABLE B-16. OPERATING CONDITIONS FOR A SNPA-DEA PROCESS[5]

Feed Gas Flow Rate	11.5 Nm^3/sec
Feed-Gas Analysis	
H_2S %	15.0
CO_2 %	10.0
COS ppm	300
CS_2 ppm	600
CH_4	Balance
Outlet Gas Analysis	
H_2S gr/100 scf	0.28
CO_2 gr/100 scf	1.6
COS gr/100 scf	0

degradation products). No data available on the composition and generation rate for this stream.*

8.0 Data Gaps and Limitations

Data gaps exist in the following areas:

- Process applicability to coal conversion process gas purification systems not studied/established.
- No data available on maximum allowable concentrations of various contaminants in the feed stream (COS, CS_2, NH_3, HCN, mercaptans, etc.).
- No data available on process economics.
- No data available on the composition, amount and disposition of the residues collected by filters.

9.0 Related Programs

No data available.

REFERENCES

1. Daily, L.W., Status of SNPA-DEA, The Oil and Gas Journal, May 4, 1970.
2. Goar, B.G., Today's Gas-Treating Processes-1, The Oil and Gas Journal, July 12, 1971.
3. Gas Processing Handbook SNPA-DEA, Hydrocarbon Processing, 54(4):95, 1975.
4. Wendt, C.J. Jr., and L.W. Dailey, Gas Treating: The SNPA Process, Hydrocarbon Processing, 46(10):155-7, 1967.
5. Riesenfeld, F.E. and A.L. Kohl, Gas Purification, Second Edition, Gulf Publishing Company, Houston, Texas, 1974, page 30-1, 78.
6. Information provided to TRW by C. L. Black of Ralph M. Parsons Company, June 20, 1978.

*A reduction of 1 ppm by weight of materials continuously entering the contactor of a typical 100 MMscfd plant will represent approximately 1 ton of contaminants(1).

ADIP PROCESS

1.0 General Information

1.1 Operating Principle - The chemical absorption of acidic gases (H_2S, CO_2, COS, etc.) from a gas stream using a relatively concentrated (20 to 35%) aqueous solution of diisopropanolamine (DIPA) as the absorbent.

1.2 Development Status - Commercially available.

1.3 Licensor/Developer - Shell Development Company
One Shell Plaza
P.O. Box 2463
Houston, Texas 77001

1.4 Commercial Applications[2,3]

- Removal of H_2S from industrial gases.
- Commercial applications include natural gas, synthesis gas and refinery fuel gas.
- More than 130 units for H_2S removal are in operation or under construction.
- Selective adsorption of H_2S to upgrade sulfur plant feed streams.

2.0 Process Information[2,3]

2.1 Flow Diagram (see Figure B-12) - The raw gas (Stream 1) enters the bottm of the contactor, and the regenerated DIPA enters the top. Raw gas passes counter-flow to the DIPA and the purified gas (Stream 2) exits the top of the contactor. The rich solution (Stream 4) from the contactor bottom flows to the stripper. Stripping occurs with the steam generated in the reboiler. Steam is condensed and separated from the acid gases and refluxed to the regenerator, while the acid gases (Stream 7) go to sulfur recovery. The regenerated solvent is returned to the contactor.

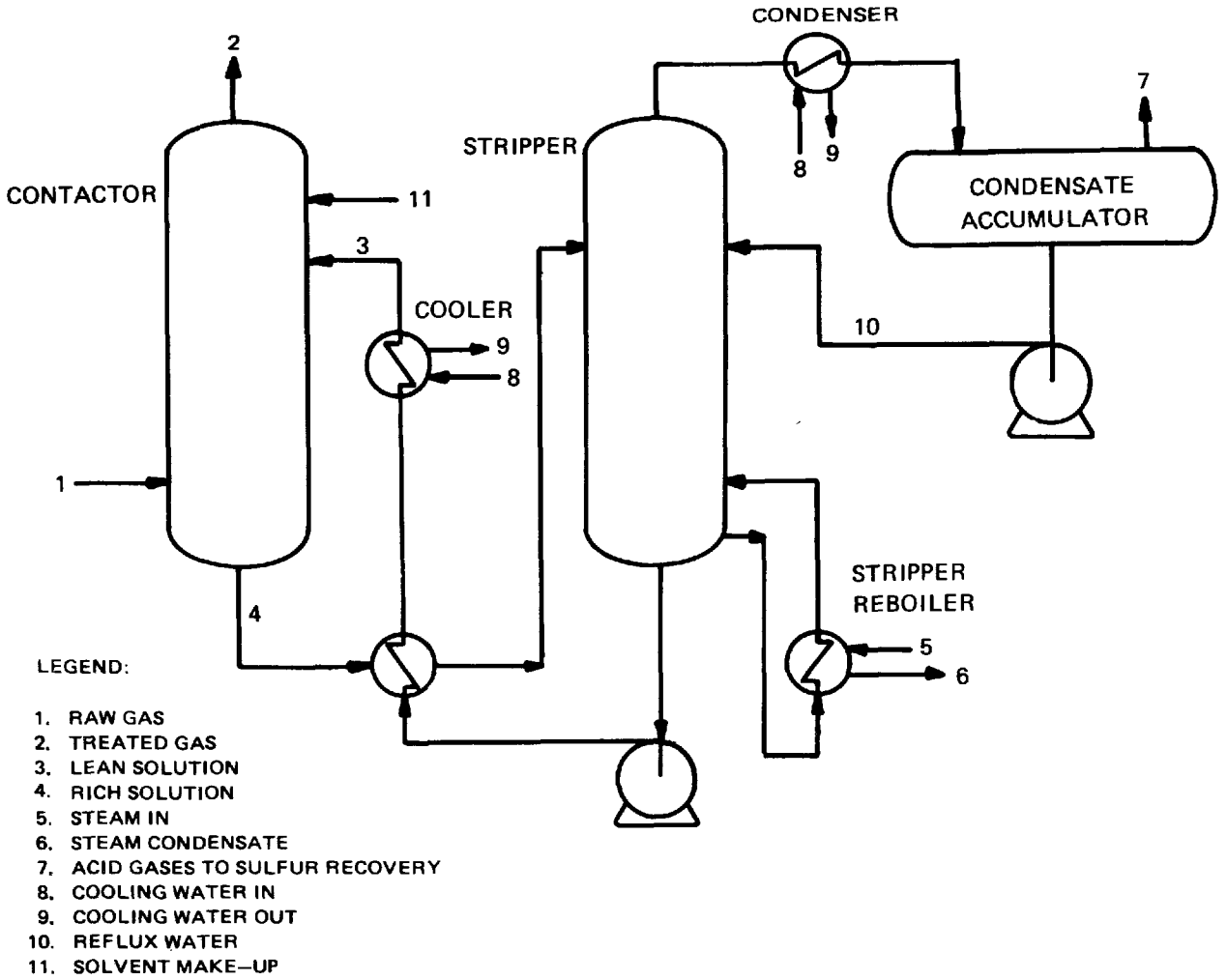

Figure B-12. ADIP Acid Gas Removal Process[3]

2.2 Equipment - Contactor, stripping column, and stripper reboiler. Because of low solvent corrosivity, carbon steel can be used throughout the plant.

2.3 Feed Stream Requirements[4]

Temperature*: $283^{o}K$ to $322^{o}K$ ($50^{o}F$ to $120^{o}F$)

Pressure†: 0 to 5.2 MPa (0 to 915 psia)

Other Impurities: ? Water washing or treatment of the feed gas to remove impurities such as HCN may be necessary to minimize DIPA degradation. Presence of a significant concentration of O_2 in the feed gas results in degradation of DIPA, requiring use of a reclaimer to recover the degraded DIPA.‡

2.4 Operating Parameters[2,4]

2.4.1 Contactor

- Temperature: $310^{o}K$ to $322^{o}K$ ($100^{o}F$ to $120^{o}F$) (see also Table B-17).
- Pressure: 1 to 5.2 MPa (15 to 915 psia) (see also Table B-17).
- Solvent Loading: Up to 0.6 mole H_2S/mole amine in absorber.

2.4.2 Stripper

- Temperature: $394^{o}K$ to $408^{o}K$ ($250^{o}F$ to $247^{o}F$)
- Pressure: Usually near atmospheric

*Like all amine solvent processes, the ADIP process is not suitable for high temperature operation because of significant reduction in absorption efficiency and increased solvent losses. (Note: amine solvents are regenerated thermally.)

†In general, the absorption efficiency with chemical absorption systems such as ADIP is independent of pressure.

‡No existing ADIP system has required a reclaimer.

TABLE B-17. OPERATING DATA FOR ADIP PLANTS[4]

Feedstock	Cracked Gas Gas From a Catalytic Cracker	Residual Gas From Hydrodesulfurization	Gas From Hydrogen Purification	Gas From FCCU*	Natural Gas
Feed Gas Flow MM Nm^3/day (MMSCFD)	0.27 (10)	2.7 (100)	2.8 (104)	5.9 (20)	0.02 (3.7)
H_2S Vol. %	10.4	15.6	3.0	2.4	7.1
CO_2 Vol. %	2.5	--	91.2	1.9	21.3
Molecular Wt	28	25	42	24	28
Absorption Pressure MPa (psia)	1.9 (285)	0.98 (70)	0.1 (15)	+0.3 (195)	2.7 (40)
Absorption Temperature ^oK (^oF)	308 (95)	314 (105)	283 (50)	311 (100)	316 (10)
Treated Gas					
CO_2 Vol. %	0.2	--	98.1	1.0	17.8
H_2S ppm (vol)	<10	100	500	160	130
Low Pressure Steam Consumption MKg/hr (M lb/hr)	4.2 (9.2)	260 (134)	47 (104)	3.3 (7.3)	2.6 (5.7)

*Fluidized Catalytic Cracking Unit

2.5 Process Efficiency and Reliability - The following product specifications are readily attained in actual applications (see also Table B-17 for data on three actual applications):

H_2S content in fuel gas:	less than 100 ppmv
H_2S content in natural gas:	less than 5 ppmv

Other acid gases as well as COS are removed depending on their concentrations and the operating conditions.* Selective amounts and rates of absorption of H_2S and CO_2 can be achieved by proper selection of DIPA concentration, flow rates, etc.). Commercial plants have demonstrated high stream factors.

No reliability data available on the operation of commercial plants.

2.6 Raw Material Requirements - DIPA solvent makeup (including mechanical losses): 2-5 x 10^{-4} kg/kg of H_2S removed.

2.7 Utility Requirements - Typical requirements per 28,300 Nm^3 (1 MMSCF) of a gas containing 10 vol.% H_2S and 2-5 vol.% CO_2 at 1.96 MPa (285 psia) with 2 ppm H_2S and 0.2 vol.% CO_2 in purified gas are:

Steam:	997 kg (2200 lb)
Electric power:	85 kwh
Cooling water:	not applicable

3.0 Process Advantages

- DIPA solvent is noncorrosive
- Solvent is not degraded by COS
- Low steam consumption compared to other processes (e.g., MEA and DEA)
- Process can be operated over a wide range of pressures†

*The DIPA solvent in the ADIP process is not degraded by COS and the process can be used for regenerative COS removal. In gas treatment application, however, a very long residence time would be required for COS removal. In processes such as the Sulfinol process (the subject of a separate data sheet) where DIPA is dissolved in Sulfolane (instead of water as in ADIP), a more effective contact between DIPA and COS is possible because of the higher solubility of COS in Sulfolane.

†Higher pressure operation has favorable effect on reaction rate.

4.0 Process Limitations

- Presence of HCN and significant concentration of O_2 in the feed gas may require feed gas pretreatment to minimize solvent degradation.

5.0 Process Economics

No overall cost data available. DIPA cost is $1.0/kg ($0.46/lb) in 1977 dollars.

6.0 Input Streams (see Figure B-12)

6.1 Raw Gas (Stream 1) - (see Table B-17)

6.2 Makeup Solvent (Stream 12) - Quantity not known.

7.0 Discharge Streams

7.1 Treated Gas (Stream 2) - (see Table B-17)

7.2 Acid Gas (Stream 7) - Acid gas stream produced during solvent regeneration is composed primarily of H_2S, CO_2. No actual data available.

7.3 Solvent Blowdown (Stream 11) - Containing sludges, degraded solvent, trapped impurities, etc. Rate and composition not known.

8.0 Data Gaps and Limitations

Data gaps exist in the following areas:

- No data available on maximum allowable concentrations of various contaminants in the feed stream (NH_3, HCN, mercaptans, etc.).
- No information on process costs including solvent makeup requirements.
- No data on solvent losses, composition of by-product acid gas and "post treatment" requirements to minimize solvent losses.

9.0 Related Programs

The ADIP process is featured in the design of the Wesco Lurgi SNG facility for removal of hydrocarbons from the acid gas stream from the Rectisol unit[5].

REFERENCES

1. Riesenfeld, F.C. and Kohl, A.L., Gas Purification, 2nd Edition, Gulf Publishing Company, Houston, Texas, 1974.

2. Dravo Corporation, Handbook of Gasifiers and Gas Treatment Systems, ERDA FE-1772-11, Washington, D.C., February 1976, pp 101-103.

3. Gas Processing Handbook, ADIP, Hydrocarbon Processing, 54 (4) : 84, 1975.

4. Information provided to TRW by J. M. Duncan of Shell Development Company, December 8, 1977.

5. Control of Emissions from Lurgi Coal Gasification Plants, EPA Office of Air Quality Planning and Standards, Research Triangle Park, North Carolina. EPA-450/2-78-012, OAQPS 1.2-093, March 1978.

FLUOR ECONAMINE (DGA) PROCESS

1.0 General Information

1.1 Operating Principles - Chemical absorption of acid impurities (CO_2, H_2S, organic sulfur) from gas streams using a relatively concentrated aqueous solution of diglycolamine (DGA) as the sorbent.

1.2 Development Status - Commercially available.

1.3 Licensor/Developer - Fluor Engineers and Constructors, Inc.
3333 Michaelson Drive
Irvine, California 92730

1.4 Commercial Applications (see Table B-18) - The Fluor Econamine Process has been in commercial use for removing H_2S and CO_2 from natural, synthesis or refinery gas streams since 1965[1]. There is no present commercial application to gases produced from coal gasification.

2.0 Process Information

2.1 Flow Diagram (see Figure B-13) - Raw gas (Stream 1) is purified in a contactor vessel where acidic impurities are absorbed by the DGA. Purified product gas (Stream 2) exits at the top. Rich solution (Stream 4) leaves the bottom of the contactor and is flashed to remove absorbed hydrocarbons. The rich solution is heated by interchange with hot lean solution before being introduced into the stripper for solution regeneration. Acid gases and water vapor pass overhead to the condenser. Condensed water is refluxed to the stripper and the acid gases (Stream 8) are sent to flare or sulfur recovery. Regenerated solution leaves the bottom of the stripper and is then cooled before being introduced in the absorber top. A side stream (Stream 9) of lean solution is taken to the reclaimer for purification.

TABLE B-18. COMMERCIAL PLANTS USING FLUOR'S ECONAMINE PROCESS

Company	Plant	Location	Comments	Inlet Capacity MMSCFD	Inlet Pressure psig	H_2S MOL. %	CO_2 MOL. %
El Paso Natural Gas Co.	Monument	Monument, New Mexico	Conversion of MEA-DEG	180	625	0.75	2.75
El Paso Natural Gas Co.	Wasson 'A'	Denver City, Texas	Conversion of MEA-DEG	105	165	0.32	5.9
El Paso Natural Gas Co.	Waha 'A'	Coyanosa, Texas	New	285	875	0.04	3.9
Getty Oil Company	New Hope	Scroggins, Texas	Conversion of MEA	44.5/5.5	1,100/400	8.48/16.6	4.01/3.4
El Paso Natural Gas Co.	Waha 'B'	Coyanosa, Texas	New	285	875	0.04	3.9
El Paso Natural Gas Co.	Wasson 'B'	Denver City, Texas	New	45	1,100	0.6	6.5
Texaco Inc.	Knight 'A'	Pecos, Texas	New	30	165	0.32	5.9
Getty Oil Co.	Teas	Streatman, Texas	New	12	800	31.7	3.8
Mountain Fuel Supply	Church Buttes	Church Buttes, Wyoming	New	3	800	6.4	23.4
Ark-La Gas Company	Gilmer	Gilmer, Texas	Conversion of MEA	15	1,100	0.31	2.49
Texaco Inc.	Knight 'B'	Pecos, Texas	New	30	1,100	0.6	6.5
Kansas-Neb Natural Gas	Pawnee Rock	Pawnee Rock, Kansas	Conversion of MEA	20	190	0.2	1.25
Marathon Oil Company	Yates	Iraan, Texas	New	10	125	5.2	6.3
Hunt Oil Company	Nordheim	Nordheim, Texas	New	10	850	0.21	7.38
Texaco Inc.	Henry	Erath, Louisiana	New	23.5	445	nil	7.6
Natural Gas Pipeline of America	Haley	Kermit, Texas	New	30	1,100	0.48	1.5
Montana Dakota Utilities	Riverton	Riverton, Wyoming	New	20	960	4.95	0.35
Rocky Mountain Natural Gas	Slick Rock	Slick Rock, Colorado	New	25	800	0.2	9.0
Corporacion Venezuela de Petroleos		Lake Maracaibo, Venezuela	New - Ethane Product	14.2	400	nil	11.41
El Paso Natural Gas	Fullerton	Fullerton, Texas	Conversion of MEA-Dehydration	35	550	1.25	3.80
Claiborne Gasoline Co.	Antioch	Lisbon, Louisiana	New	10	1,100	0.8	2.0
ARAMCO	Plant 415	Ras Tanura, Saudi Arabia	New - 2 Plants	70 ea.	15	12.28	2.09
Canadian Superior Oil Co.	Harmattan Stg 7		New	150	930	0.01	4.45
ARAMCO	Plant 464	Udhaliyah, Saudi Arabia	New - 2 Plants	38 ea.	230	1.7	10.2
Confidential Client		Victoria, Australia	New - COS Removal	40	1,050	Trace	0.64
Nat. Iranian Oil Co.	Tehran Ref.	Tehran, Iran	New	5.5/6.3	320/57	8.7/26.7	0/0
ARAMCO	Berri - Plt 474	Jubail, Saudi Arabia	New - 3 Plants	220	125	9.02	7.72
Nat. Iranian Oil Co.	Esfahan Ref.	Esfahan, Iran	New	6.1/8.0	330/63	5.5/24.9	0/0
ARAMCO*	Shedgum	Saudi Arabia	New - 4 Plants - Improved DGA	547 ea.	160	2.2	9.6
ARAMCO*	Uthmahiyah	Saudi Arabia	New - 3 Plants - Improved DGA	547 ea.	160	2.2	9.6
Confidential Client*	---	Middle East	New - Improved DGA	141	220	1.88	4.34

*Under Construction

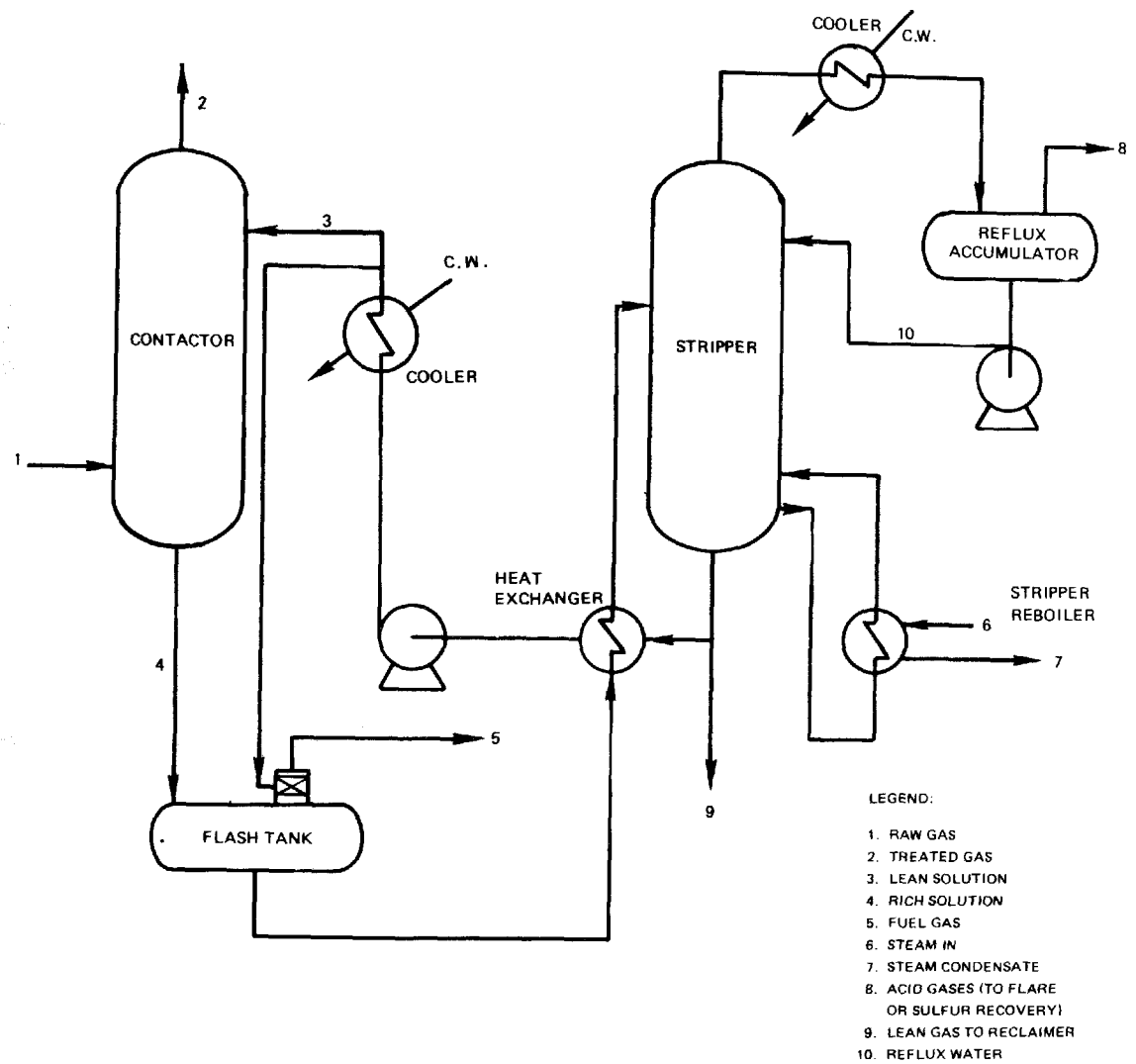

Figure B-13. Fluor Econamine Acid Gas Removal Process[3]

2.2 Equipment - Conventional contactor, stripper column, flash tank, stripper reboiler and a reclaimer.

2.3 Feed Stream Requirements*

Temperature†: Usually less than 344°K (160°F)

Pressure‡: No limit

Loading: Depends on acid gas partial pressure and temperature of rich amine.

2.4 Operating Parameters[3,5]

2.4.1 Contactor

Temperature†: 305°K to 378°K (90°F to 220°F)

Pressure‡: No limit

Solution loading: 0.035 to 0.14 Nm^3 of acid gas per liter (5 to 2.0 scf/gal)

2.4.2 Stripper[5]

Temperature: 377°K to 465°K (220°F to 280°F)

Pressure: Near atmospheric

2.4.3 Solvent Reclaimer

Temperature: 433°K to 465°K (320°F to 380°F), kettle temperature

Pressure: Same as stripper

Reclamation rate: 1 to 2% of circulation solution

2.5 Process Efficiency and Reliability - Can reduce H_2S and CO_2 in gas to less than 4 ppmv and 0.01 volume %, respectively[1]. Satisfactory

*Fluor Econamine (DGA) is considered suitable for all applications where aqueous monoethanolamine (MEA) process can be used. The process shows significant savings over MEA in applications where the inlet gas contains more than 1.5 to 2% acid gas[1].

†Like all amine solvent processes, the Fluor Econamine process is not suitable for high temperature operation because of reduction in absorption efficiency and increased solvent losses. (Note: amine solvents are regenerated thermally.)

‡In general, in chemical absorption systems, the absorption efficiency is independent of absorption pressure.

long-term operating experience at commercial installations confirm the acceptability of the process from the standpoint of system corrosion, efficiency and maintenance requirements.

2.6 Raw Material Requirements[5] - DGA solvent makeup: Approximately 35 to 100 kg/Nm^3 (2 to 6 lbs/MMSCF) depending on gas throughput and temperature.

2.7 Utility Requirements[5] - Based on feed stream rate of 2.7 MM Nm^3/day (100 MMSCFD) at 305^oK (90^oF) and 5.9 MPa (850 psig) and a feed stream composition of 90% CH_4, 5% H_2S and 5% CO_2:

Steam:	32.2 (35 ton) per hour at 0.48 MPa (70 psia)
Electricity:	?
Cooling water:	?

3.0 Process Advantages

- Low solvent volatility losses relative to other amine systems.
- Substantial removal of mercaptans and organic disulfides[2].
- Low absorption of heavy hydrocarbons[2].
- The relatively low vapor pressure of DGA permits its use in relatively high concentrations, typically 40% to 70% (compared to 15% to 20% for MEA). This results in higher acid gas pick-up capacity, lower solution circulation rate, lower stripper reboiler steam consumption and significant reductions in capital investments and operating costs[2,3,4,5]. Savings of as much as 15% to 25% in both capital and operating costs have been claimed for Fluor Econamine process, compared to conventional MEA.
- DGA is suitable for process streams containing COS and CS_2 since (unlike MEA) reaction products are thermally regenerated.

4.0 Process Limitations[4]

- Relatively high cost of DGA.
- Somewhat high corrosiveness toward carbon steel, although probably less than MEA.
- Higher solution losses (compared to MEA) due to higher concentration in circulating solution.
- Requirement for vacuum distillation for solvent purification.

5.0 Process Economics

No actual cost data available for the process. Savings of as much as 15% to 25% in both capital investment and operating costs have been claimed for the process when compared to the conventional MEA[2].

6.0 Input Streams (see Figure B-13)

6.1 Raw Gas (Stream 1) - Typical case from Reference 4. 3.2 MM Nm^3/day (121.3 MMSCFD, 5.9 MPa (865 psia)) natural gas containing 2% to 5% total acid gas[4].

6.2 Solution Makeup: Quantity unknown.

7.0 Discharge Streams (see Figure B-13)

7.1 Treated Gas (Stream 2)[4]

CO_2, 0.01 mole %
H_2S, 0.006 g/Nm^3 (0.25 grains/100 scf)

7.2 Acid Gases (Stream 8) - No data available on actual rates and composition. For a plant handling 2.68 MM Nm^3/day (100 MMSCFD of natural gas, the acid gas volumetric rate would be close to 0.268 MM Nm^3/day (10 MMSCFD). The gas contains primarily CO_2, H_2S, and probably traces of organic sulfur compounds, hydrocarbons and solvent.

7.3 Lean Solution Side Stream Sent to Reclaimer (Stream 9) - Volumetric rate 1% to 2% of circulating solution; no data available on composition.

7.4 Fuel Gas Generated in Flash Tank (Stream 5) - No data available on quantity and composition. (The gas contains mainly volatile hydrocarbons.)

7.5 Solvent Blowdown (from reclaimer and/or stripper) - Intermittent only.

8.0 Data Gaps and Limitations

Data gaps exist in the following areas:

- Process applicability to coal conversion process gas purification systems not studied/established.

- Limited data available on maximum allowable concentrations of various contaminants in the feed stream (COS, CS_2, NH_3, HCN, mercaptans, etc.).

- No information on process costs including solvent makeup requirements.

- No data on solvent losses, composition of by-product acid gas and "post treatment" requirements (if any) to minimize solvent losses.

- No data on rates and composition of blowdown solvent and flash gas.

9.0 Related Programs

No data available.

REFERENCES

1. Holder, H.L., Diglycolamine - A Promising New Acid-Gas Remover, The Oil and Gas Journal, 64 (May 2): 83-86, 1966.

2. Fluor Corporation, Gas Treating - 95/J340/6/2, Los Angeles, California, 5 pages.

3. Dingman, J.C., and T.F. Moore, Compare DGA and MEA Sweetening Methods, Hydrocarbon Processing, 47 (7): 138-140, 1968.

4. Riesenfeld, F.C. and A.L. Kohl, Gas Purification, Second Edition, Gulf Publishing Company, Houston, Texas, 1974, pp 31-2.

5. Information supplied to TRW by R. L. Schendel of Fluor Engineers and Constructors, Inc., March 7, 1978.

ALKAZID (ALKACID) PROCESS

1.0 General Information

1.1 Operating Principle[1,4] - The absorption of the sour components of a gas stream (H_2S, CO_2, CS_2) using an aqueous solution of alkali salts of weak-nonvolatile amino acids. Three different absorption solutions are used:

- Alkazid "M" for the removal of H_2S and CO_2 from gas streams containing one or both components. The absorption solvent is an aqueous solution of potassium monoethyl amino propionate.
- Alkazid "DIK" for the selective removal of H_2S from gases that also contain CO_2. The absorption solvent is an aqueous solution of the potassium salts of dimethyl amino acetic acid.
- Alkazid "S" used in cases where feed gas contains appreciable quantities of impurities; e.g., HCN, ammonia, CS_2. The absorption solvent contains sodium phenolate.

1.2 Development Status - Commercially available.

1.3 Licensor/Developer - BASF AG
6700 Ludwigshafen
West Germany

1.4 Commercial Applications[3,4]

- Process has been used commercially since the 1930's; 60 to 80 plants in operation throughout the world, of which 20 were built by Davy Powergas GMBH.
- No commercial application known in the United States.
- Process has been used to treat natural gas, synthesis gas, refinery gas, flue gas and coal gas (commercially applied to Lurgi, Koppers-Totzek and Winkler gasification plants).

2.0 Process Information[3,5]

2.1 Flow Diagram - see Figure B-14.

- The lean solvent and the sour feed gas enter the top and bottom of the absorber, respectively. The purified product gas exits the top of the absorber. The rich solvent is pumped from the absorber, heated by interchange with hot lean solvent and enters the top of the stripper, within which the absorption reactions are reversed with heat and acid gases are evolved. Steam is condensed and separated from the acid gas and the acid gas is piped to sulfur recovery. The hot lean solvent is pumped from the regenerator to a heat exchanger and then to the absorber.

2.2 Equipment[2] - Conventional absorbers, stripping columns and condensate accumulators.

2.3 Feed Stream/Requirements[7]

Temperature: $293^{o}K$ to $313^{o}K$ ($68^{o}F$ to $104^{o}F$)

Pressure: 0.11 to 7.0 MPa (16 to 1000 psia)

2.4 Operating Parameters[7]

2.4.1 Absorption Step

Temperature: $293^{o}K$ to $313^{o}K$ ($68^{o}F$ to $104^{o}F$)

Pressure: 0.11 to 7.0 MPa (16 to 1000 psia)

2.4.2 Stripping Step

Temperature: $378^{o}K$ to $393^{o}K$ ($220^{o}F$ to $250^{o}F$)

Pressure: 0.11 to 0.16 (16 to 23 psia)

2.5 Process Efficiency and Reliability[3] - Purity of product gas depends upon factors such as pressure, temperature, ratio between H_2S and CO_2 in the feed gas. In high pressure applications a product gas purity of less than 1 g/100 Nm^3 (0.5 gr/100 scf) can be attained and in certain low pressure application as much as 46 g/100 Nm^3 (20 ft/100 scf) in the purified gas can be realized.

2.6 Raw Material Requirements - Solvent makeup requirements not known.

2.7 Utility Requirements[5] - Typical requirements per 1000 Nm^3 (MMscf) of feed gas with 0.7 vol % H_2S and 30 vol % CO_2 at 7.58 MPa (1100 psig)

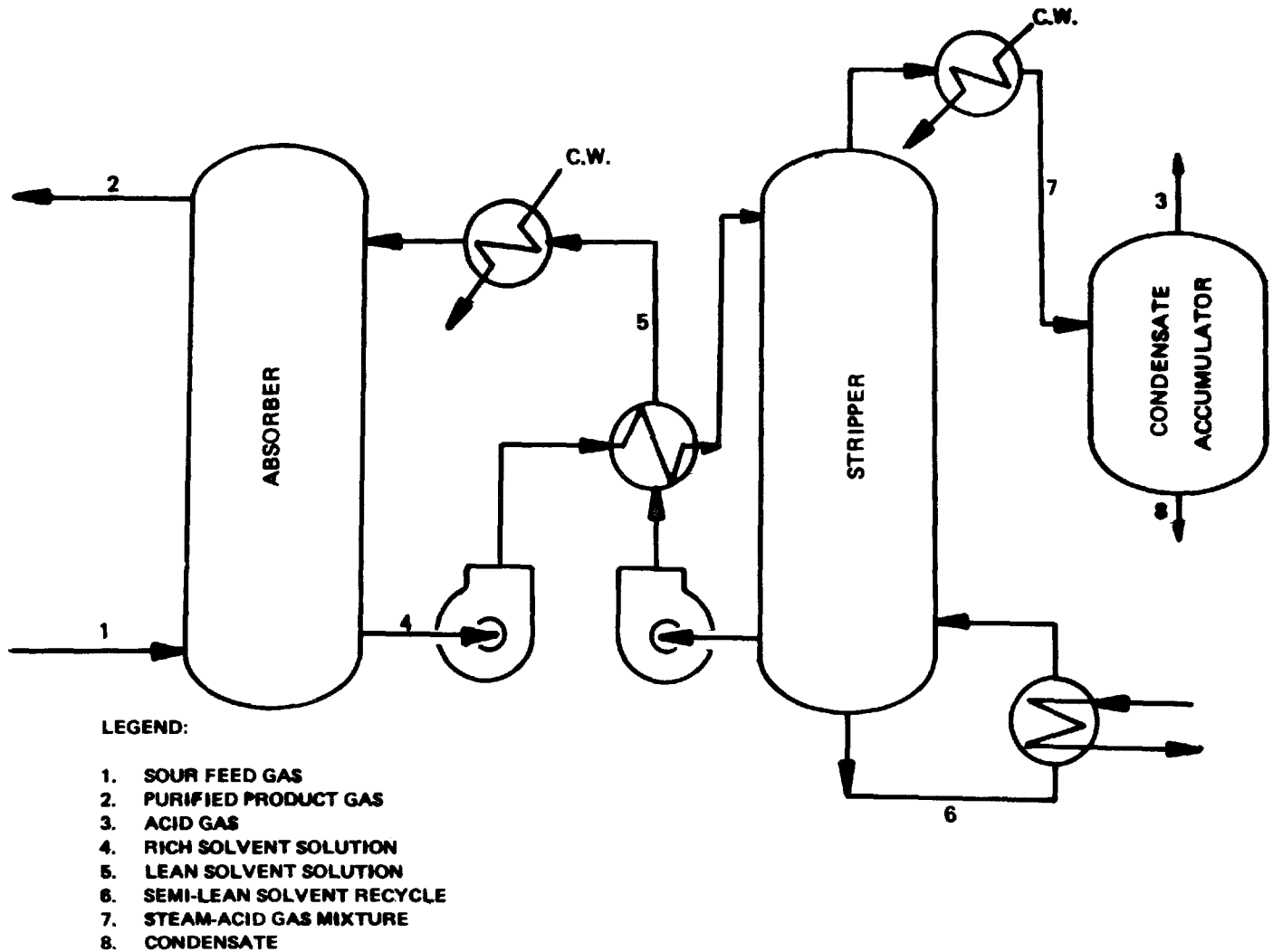

Figure B-14. Alkazid Process

and 298°K (77°F) with 5 ppm H_2S in purified gas are as follows:

Steam:	248 kg/1000 Nm^3 (15,500 lb/MMscf)
Cooling water:	1.25×10^4 ℓ/1000 Nm^3 (93,500 gal/MMscf)
Electric Power:	8.13 kwh/1000 Nm^3 (230 kWh/MMscf)

3.0 Process Advantages[2]

- Solvent has a low vapor pressure
- Solvent has high H_2S carrying capacity
- COS, CS_2, and NH_3 and mercaptans in feed gas do not affect performance of Alkazid solvent.

4.0 Process Limitations

- Solvent is degraded by certain contaminants (e.g., HCN, O_2)[3].
- Aluminum and special alloys are normally used for the hot-solution pumps and lines, the reactivator, and the reboiler[3].
- Possible foaming problems, particularly during start-up (as is common with any amine system).[2]

5.0 Process Economics[7]

The capital investment for a 3.84×10^6 Nm^3/day (134 MMscfd) Alkazid plant is estimated at about $4 x 10^6 (1977 dollars).

6.0 Input Streams (Stream 1)

See Table B-19.

6.1 Feed Gas (Stream 1) - See Table B-19.

7.0 Discharge Steams

7.1 Product Gas Stream (Stream 2) - see Table B-19.

7.2 Acid Gas Stream (Stream 3) - see Table B-19.

8.0 Data Gaps and Limitations

Data gaps exist in the following areas:

- Definition of the maximum allowable concentrations of various contaminants in the feed gas; e.g., COS, CS_2, NH_3, and mercaptans.

TABLE B-19. TYPICAL PERFORMANCE DATA FOR ALKAZID[7]

		Streams		
		1 Feed Gas	2 Product Gas	3 Acid Gas
Gas quantity	MM Nm^3/day (MMSCFD)	3.84 (143)	3.74 (139)	0.128 (4.77)
Pressure	MPa (psia)	2.1 (308)	2.05 (301)	4.0 (588)
Temperature	^oK (^oF)	298 (77)	298 (77)	377 (221)
Analysis:				
CO_2	Vol. %	21	19	74.7
CO	Vol. %	36	36.9	--
H_2	Vol. %	39	40.1	2.0
CH_4	Vol. %	2	2.0	--
N_2 + Ar	Vol. %	2	2.0	--
H_2O	ppm	7835	100	23.3

- The effect that various contaminants (NH_3, carbonaceous matter, trace metals, etc.) have on the process, and the ultimate fate of such contaminants in the system.

9.0 Related Programs

No current information available.

REFERENCES

1. Reed, R.M. and Updegraft, N.C., Removal of Hydrogen Sulfide from Industrial Gases; Industrial and Engineering Chemistry, Vol. 42, No. 11, 1950.

2. Wainwright, H.W., Egleson, G.C., et al, Selective Absorption of Hydrogen Sulfide from Synthesis Gas; Industrial and Engineering Chemistry, Vol. 45, No. 6, 1953.

3. Gas Processing Handbook, Hydrocarbon Processing, April 1975.

4. Riesenfeld, F.C., and Kohl, A.L., Gas Purification, 2nd Edition, Gulf Publishing Company, Houston, Texas, 1974.

5. Handbook of Gasifiers and Gas Treatment Systems, Dravo Corp. for ERDA, FE-1772-11, February 1976.

6. Maddox, R.N., Gas and Liquid Sweetening, Campbell Petroleum Series, 1974.

7. Information provided to TRW by L. H. Greives of Davy Powergas, Inc., June 16, 1978.

SULFINOL PROCESS

1.0 General Information

1.1 Operating Principle - A combination of physical and chemical absorption of sour components of gas streams (e.g., H_2S, CO_2, COS, mercaptans) using the Sulfinol solvent (a mixture of Sulfolane and DIPA). The physical absorption done by Sulfolane (cyclotetramethylene sulfone) and the chemical absorption done by DIPA (diisopropanolamine).

1.2 Development Status - Commercially available.

1.3 Licensor/Developer - Shell Development Company
One Shell Plaza
P.O. Box 2463
Houston, Texas 77001

1.4 Commercial Applications

1.4.1 110 plants in operation or under construction. Worldwide applications are as follows[9]:

- Approximately 70% are in natural gas sweetening.
- The remaining are in the purification of refinery gases, synthesis gases, LNG feedstock, and hydrogen[1].

1.4.2 Application to Coal Gasification[2]

- The Azot Sanayii, Koppers-Totzek, Coal Gasification plant located at Kutahya, Turkey has a Sulfinol unit on line. At this facility gas is taken from a gas holding tank, compressed to 2.72 MPa (400 psi) then piped to the Sulfinol unit for H_2S removal. No further data are available.

2.0 Process Information

2.1 Flow Diagram - see Figure B-15 - The feed gas, Stream 1, enters the bottom of the absorber, and the stripped solvent enters the top. Sour gas passes counter-flow to the solvent. Purified product gas, Stream 2, exits the top of the absorber and rich solvent exits the

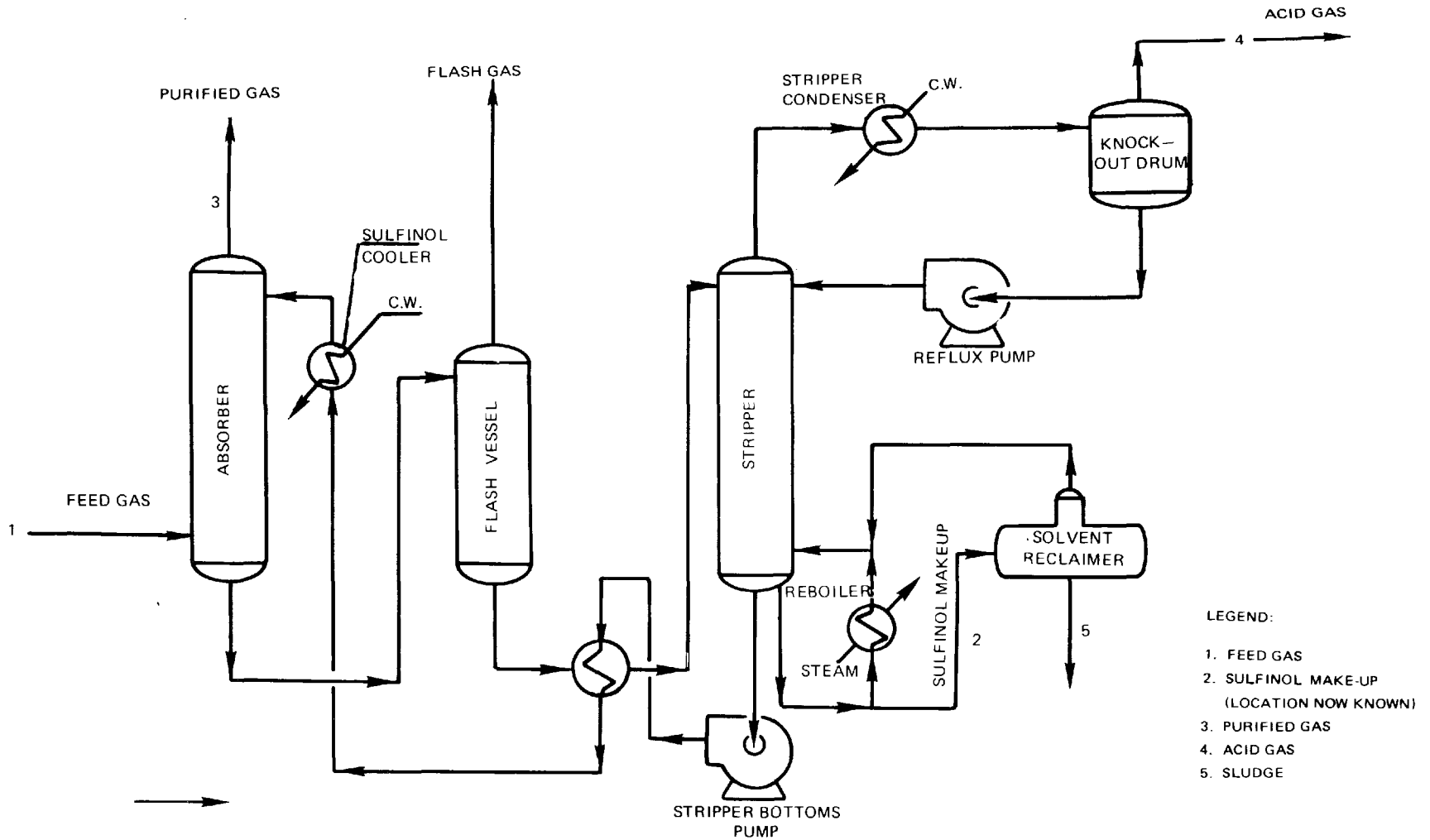

Figure B-15. Sulfinol Process

bottom. The rich solvent enters the flashing stage, and the acid gas evolved, Stream 3, exits the top of the stripper. Lean solvent exits the bottom of the stripper, and is pumped to the absorber. A small slip-stream of lean solvent is pipe to a reclaimer unit for removal of degradation products.

2.2 Equipment - Absorbers, flash vessel, stripping columns, pumps, heat exchangers.

2.3 Feed Stream/Requirements[9]

Temperature: $289^{o}K$ to $330^{o}K$ ($60^{o}F$ to $140^{o}F$)
Pressure: 0.15 to 9 MPa (22 to 1330 psia)

2.4 Operating Parameters[9]

- Absorption step

  Temperature: $289^{o}K$ to $330^{o}K$ ($60^{o}F$ to $140^{o}F$)

  Pressure: 0.15 to 9 MPa (22 to 1330 psia)

- Stripper column

  Temperature: $380^{o}K$ to $422^{o}K$ ($225^{o}F$ to $300^{o}F$)
  Pressure: 0.11 to 0.24 MPa (16 to 35 psia)

- Solution Loading: 0.03 to 0.124 Nm^3/l (4 to 17 scf/gal)

2.5 Process Efficiency and Reliability

- Process is capable of producing pipeline specification gas.

- Solvent has good affinity for sour components at low-to-medium partial pressures and has high affinity for sour components at high partial pressures. See Table B-20 for solubilities versus partial pressure.

- Sulfinol units presently on line display an ease of operation with minimum problems due to system upsets[5].

- In natural gas and synthesis gas applications with feed gas as follows[8]:

  H_2S: 0 to 53 MOL %
  CO_2: 1.1 to 46 MOL %

TABLE B-20. SOLUBILITY OF HYDROGEN SULFIDE IN SULFINOL SOLVENT[1]

Partial Pressure H_2S MPa (psia)	Equilibrium Solvent Loading Nm^3 H_2S/100 l of Solvent (SCF/gal)
0.14 (20)	3.7 (5)
0.54 (80)	7.5 (10)
0.68 (100)	9.0 (12)
1.02 (100)	11.2 (15)
1.36 (200)	13.5 (18)

purified gas attained:

H_2S: <1 ppm
CO_2: <50 ppm
H_2S + COS: <2 ppm

2.6 Raw Material Requirements - Solvent Loss[9]: Typically 17 to 68 kg/MM Nm^3 (1 to 4 lbs/MMscf).

2.7 Utility Requirement - Typical requirements for utilities per 1.0 kg (pound) of acid gas removed[6].

- Electricity: <0.02 kwh (<0.01 kwh)
- LP steam 0.47 MPa (55 psig): 0.80 to 1.62 kg (0.8 to 1.6 lb)
- Cooling water: 44 to 82 l (5.4 to 9.8 gallons)

2.8 Miscellaneous/Maintenance[5,9]

- Solvent will penetrate through screwed pipe threads wherever possible; normal pipe dope cannot be used. Teflon tape must be used on threaded pipe.
- Nordel O-rings in pumps or anywhere an elastomer material is required in solvent service. Nordel will not withstand hydrocarbon oils; so mechanics must keep oil and grease away from Nodel O-rings when replacing them in pump seals.
- Braided teflon gaskets are recommended for sealing the covers of Sulfinol filters.

- Viton material should be used for resilient seats in butterfly valves in acid-gas service.

- Solvent will remove paint unless immediately removed; good housekeeping of spills and drips is necessary.

- Solvent is relatively expensive ($3.50 to $5.00/gal in 1977).

3.0 Process Advantages[3,5,9]

- Process can produce pipeline specification gas.

- The presence of heavy liquid hydrocarbons, including crude oil in the contactor does not cause foaming.

- Solvent is noncorrosive which allows carbon-steel materials to be used throughout the system except high parts which contact rich solvent.

- The heat capacity of the solvent varies with composition, but is about 0.38 cal/gram ^{o}K at 339°K (0.678 Btu/lb ^{o}F at 150°F).

- As the partial pressure of H_2S in the feed gas increases, the flow rate of the solvent on a volume-to-volume basis decreases.

- The preceding two items will cause a relative lowering of utility costs compared to other alcoholamine processes.

- Solvent does not expand when frozen.

- In certain cases, H_2S can be selectively removed in the presence of CO_2.

4.0 Process Limitations

- Greatest appliability when:

  1. H_2S/CO_2 ratio in feed gas is 1:1 or greater
  2. Acid gas partial pressure is 0.68 MPa (100 psia) or greater

- Solvent is expensive

- Some hydrocarbons are absorbed in the solvent and may appear in the concentrated acid gas*

*In subsequent sulfur recovery using the Claus process, discoloration of product sulfur can be experienced if the feed gas has more than 0.3 mole % of aromatics or if the acid gas contains more than 2.0 mole % hydrocarbons or if the C_5+/H_2S mole ratio is greater than 0.005. To avoid such problems, a carbon adsorption unit may be used ahead of the sulfur plant to remove organics[5].

5.0 Process Economics

- Sulfinol costs - $2.90 per 3.78 ℓ (gallon)
- Royalty must be paid to licensor
- Typical requirements per 1000 Nm^3 (MMscf) of gas at 2.8 MPa (397 psig) and 295°K (72°F) containing 0.46% H_2S and 4.9 mole % CO_2, with 3 ppm H_2S and 0.05 mole % CO_2 in purified gas are estimated:

Steam:	16 kg/1000 Nm^3 (10,000 lb/MMSCF)
Cooling water:	?
Electric power:	2.12 kwh/1000 Nm^3
Solvent:	?

6.1 Input Streams

6.1 Feed Gas (Stream 1) - see Table B-21.

6.2 Sulfinol Makeup (Stream 2)

- Typically less than 600g/1000 Nm^3 (<35 lb/MMscf)

7.0 Discharge Streams

7.1 Purified Gas Stream (Stream 3) - see Table B-22.

7.2 Acid Gas Stream (Stream 4) - see Table B-23.

7.3 Sludge* (Stream 5)

8.0 Data Gaps and Limitations

Data gaps exist in the following areas:

- Process information from the Azot Sanayii coal gasification plant at Kutahya, Turkey.
- Characterization of gaseous and liquid feed streams for refinery/natural gas applications.
- Characterization of off-gas and liquid waste streams for refinery/natural gas applications; e.g., purified gas, acid gas and sludge.

*Reclaimer bottoms generated vary from installation to installation. In coal conversion plants, they are generally mixed with waste ash.

TABLE B-21. SOUR GAS FEED STREAM TO SULFINOL UNIT AT PERSON GAS PLANT, KARNES, TEXAS

Flow rate: 90.56×10^4 Nm^3/day (32 MMSCFD)

Pressure: 69 MPa (1000 psig)

Component	Mole Percent
C_1	81.57
C_2	5.82
C_3	1.85
C_4	1.03
C_5	0.45
C_6	0.15
C_7	0.06
C_8	0.043
C_9^+	0.004
Benzene	0.013
Toluene	0.010
Xylene	Trace
Total Hydrocarbon	91.00
N_2	0.50
CO_2	6.90
H_2S	1.60
COS	(7 ppm)
RSH	(19 ppm)

TABLE B-22. OPERATING DATA FOR SULFINOL UNIT AT PERSON GAS PLANT

Item	Observed Case I	Observed Case II
Feed gas composition, vol. %		
H_2S	1.6	1.6
CO_2	6.9	6.9
Feed gas rate, Nm^3 (MMSCFD)	90.56×10^4 (32)	90.56×10^4 (32)
Solvent flow, l/m (gpm)	1192 (315)	1268 (335)
Solvent loading		
vol. acid gas/vol. solvent	45	42.5
Residue gas, g/Nm^3	0.01 (0.6)	<0.002 (<0.1)
(gr H_2S/100 scf)		

TABLE B-23. COMPOSITION OF THE ACID GAS STREAM FROM SULFINOL UNIT AT PERSON GAS PLANT, KARNES, TEXAS

Component	Acid Gas Composition, Vol.% Observed
C_1 - C_4	1.20
C_5+	0.50
Aromatics	0.20
Σ Hydrocarbons	1.90
H_2S	18.0
CO_2	80.1

- Definition of the maximum allowable concentration of various contaminants in the feed gas; e.g., CS_2, NH_3, mercaptans, etc.

- The effect that various contaminants (NH_3, carbonaceous matter, trace metals, etc.) have on the process, and the ultimate fate of such contaminants in the system.

9.0 Related Programs

No data available.

REFERENCES

1. Reisenfeld, F.C. and Kohl, A.L., Gas Purification, 2nd Edition, Gulf Publishing Company, Houston, Texas, 1974.

2. Dunn, C.L., E.R. Freitas, et al, First Plant Data from Sulfinol Process, Hydrocarbon Processing, 44 (4), p. 137-140, April 1965.

3. Stecher, P.G., Hydrogen Sulfide Removal Process, Noyes Data Corporation, 1972.

4. Goar, B.G., Sulfinol Process has Several Key Advantages, The Oil and Gas Journal, p. 117-120, 30 June 1969.

5. Gas Processing Handbook, Hydrocarbon Processing, p. 96, April 1975.

6. Dunn, C.L., E.R. Freitas, et al, Shell Reveals Commercial Data on Sulfinol Process, The Oil and Gas Journal, p. 89-92, 29 March 1965.

7. Dravo Corporation, Handbook of Gasifiers and Gas Treatment Systems, ERDA FE-1772-11, Washington, D.C., February 1976, p. 139-141.

8. Information supplied to TRW by J. M. Duncan of Shell Development Company, December 8, 1977.

AMISOL PROCESS[1]

1.0 General Information

1.1 Operating Principle - A combination of physical and chemical absorption of the sour components (H_2S, CO_2, HCN, etc.) of a gas stream using an aqueous solution of methanol and diethanolamine or monoethanolamine.

1.2 Development Status - Commercially available.

1.3 Licensor/Developer - American Lurgi Corporation
377 Route 17
Hasbrouck, New Jersey 07604

1.4 Commercial Applications - One system on stream in an ammonia and methanol complex treating raw gas produced by partial oxidation of fuel oil.

2.0 Process Information

2.1 Flow Diagram (see Figure B-16) - Sour feed gas, Stream 1, enters the bottom and lean solvent and water enter the top of the absorber. The sour gas passes counter-flow to the solvent and the purified product gas, Stream 2, exits the top of the absorber. Rich solvent exits the bottom of the absorber and is piped to the regenerating unit. Flashing occurs in the regenerating unit and the acid gas evolved, Stream 3, exits the top of the regenerator and is piped to sulfur recovery. Lean solvent exits the bottom of the regenerator. A portion of the lean solvent is piped to the absorber and a portion is piped through a heat exchanger back to the regenerator.

A methanol/water solution is piped from the absorber to a methanol distillation process where methanol and water are separated and recycled back to the system.

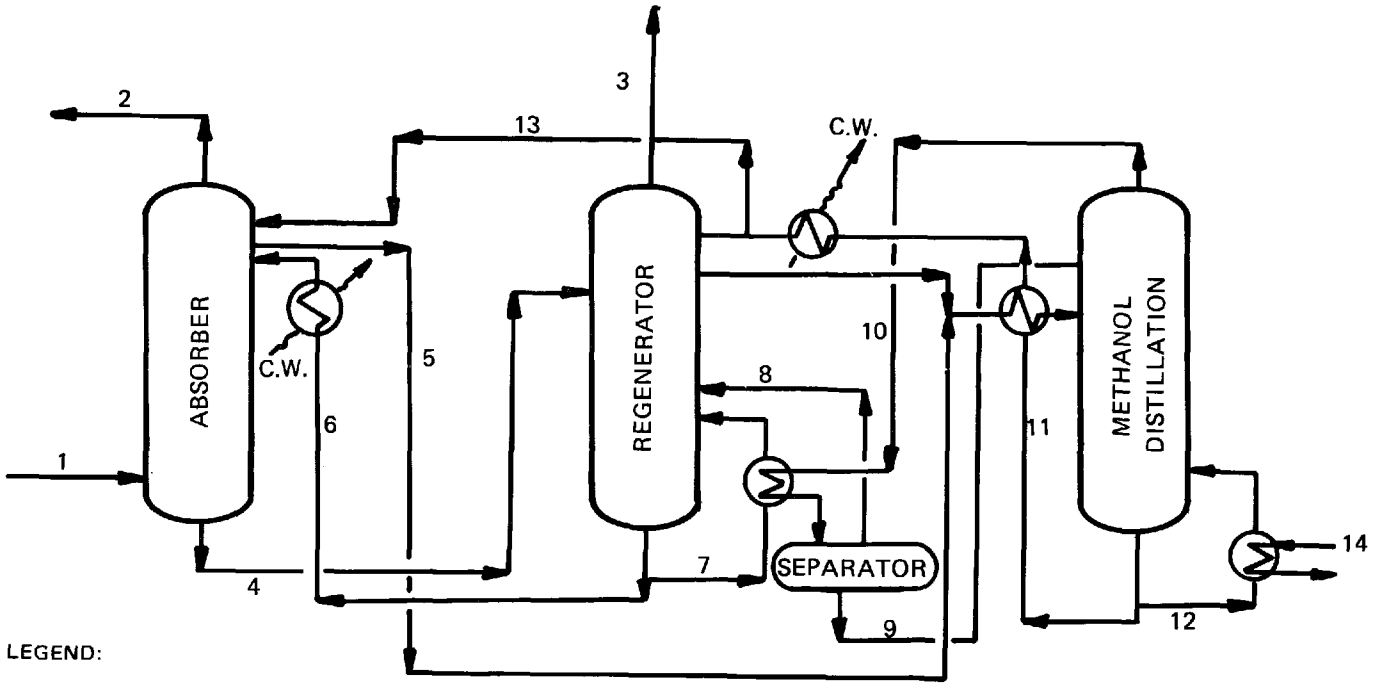

LEGEND:

1. SOUR FEED GAS
2. PURIFIED PRODUCT GAS
3. ACID GAS
4. RICH SOLVENT
5. METHANOL AND WATER MIXTURE
6. LEAN SOLVENT TO ABSORBER
7. LEAN SOLVENT TO REGENERATOR
8. METHANOL
9. METHANOL AND WATER TO DISTILLATION
10. METHANOL AND WATER FROM DISTILLATION
11. WATER/METHANOL TO SYSTEM
12. WATER/METHANOL RECYCLE
13. WATER
14. STEAM

Figure B-16. Flow Diagram - Amisol Process

2.2 Equipment - Conventional absorbers, stripping columns, and flash vessels.

2.3 Feed Stream Requirements

Temperature: ?
Pressure: ?
Others: ?

2.4 Operating Parameters

Temperature: ?
Pressure: ?
Others: ?

2.5 Process Efficiency and Reliability - Process can reduce H_2S content of gas to less than 0.1 ppm, and CO_2 content to less than 5 ppm.

2.6 Raw Material Requirements - Amine makeup is less than 160 kg/1000 Nm^3 (10 lb/Mscf) of sour gas treated.

2.7 Utility Requirements: ?

2.8 Miscellaneous: ?

3.0 Process Advantages

Due to the solvent's noncorrosive nature, equipment used in the Amisol process can be constructed of carbon steel.

4.0 Process Limitations

Due to low boiling point of methanol, methanol vapors may contaminate purified gas stream.

5.0 Process Economics

6.0 Input Streams

6.1 Sour Gas Stream (Stream 1) - Table B-24.

7.0 Discharge Streams

7.1 Purified Gas Stream (Stream 2) - Table B-24.

7.2 Acid Gas Stream (Stream 3) - Table B-24.

TABLE B-24. AMISOL INPUT AND DISCHARGE STREAM COMPOSITION*

Composition	Streams† 1 Feed Gas	2 Purified Gas	3 Acid Gas
CO_2	6.6 Vol %	10 ppm	90.7 Vol %
H_2S	0.38 Vol %	0.3 ppm	4.4 Vol %
COS	152 ppm	0.1 ppm	0.15 Vol %
CO	44.9 Vol %	48.2 Vol %	2.3 Vol %
H_2	47.6 Vol %	5 .3 Vol %	2.4 Vol %
H_2	0.2 Vol %		
CH_4	0.3 Vol %		
Pressure	2.98 MPa		
Temperature	293°K		

*Based on tests with a gas produced from residual oil by pressure gasification with oxygen and steam.

†See Figure B-16 for stream locations in process.

8.0 Data Gaps and Limitations

Applicability to coal conversion processes

Applicable feed gas stream requirements

- Temperature and pressure ranges
- Concentration of various contaminants
- The effect that contaminants such as NH_3, carbonaceous matter, trace minerals, etc., have on the process, and the ultimate fate of such contaminants in the system.

The reliability and efficiency of the process.

Process economics

- Typical utility cost or usage
- Solvent makeup required
- Other operating cost

Miscellaneous process unique maintenance requirements.

9.0 Related Programs

REFERENCES

1. Bratzler, K. and Doerges A., Amisol Process Purifies Gases, Hydrocarbon Processing, April 1974.

BENFIELD HOT CARBONATE PROCESS

1.0 General Information

1.1 Operating Principles - Chemical absorption of carbon dioxide and hydrogen sulfide at an elevated pressure by a hot potassium carbonate solution containing activators such as diethanolamine as (absorption catalyst).* Absorbed gases are stripped from the carbonate solution by steam at low pressure.

1.2 Development Status - Commercially available since early 1960's.

1.3 Licensor/Developer - The Benfield Corporation
615 Washington Road
Pittsburgh, Pennsylvania 15228

1.4 Commercial Applications[1,2] - Over 400 Benfield systems are operating worldwide. Several units are operating on synthesis gases produced by partial oxidation of heavy petroleum fractions, and one unit has operated successfully at a Lurgi coal gasification plant in Westfield, Scotland.

2.0 Process Information

2.1 Flow Diagrams (see Figure B-17 and B-18†)

*Another hot carbonate process, Catacarb (for which Fickmeyer & Associates of Prairie Village, Kansas are the licensors), employs amine borates as absorption catalysts. The process flow diagrams and performance capabilities of Catacarb units are essentially the same as those of Benfield units. The Benfield process is covered by this data sheet since it is much more widely used than Catacarb and for which more extensive data are available.

†Several variations of the Benfield process have been used commercially, depending on the degree and selectivity of CO_2/H_2S removal required. These variations are primarily in the solution circulation patterns and degree of regenerated solution cooling. Two of the more commonly used designs of the Benfield process are covered in this data sheet.

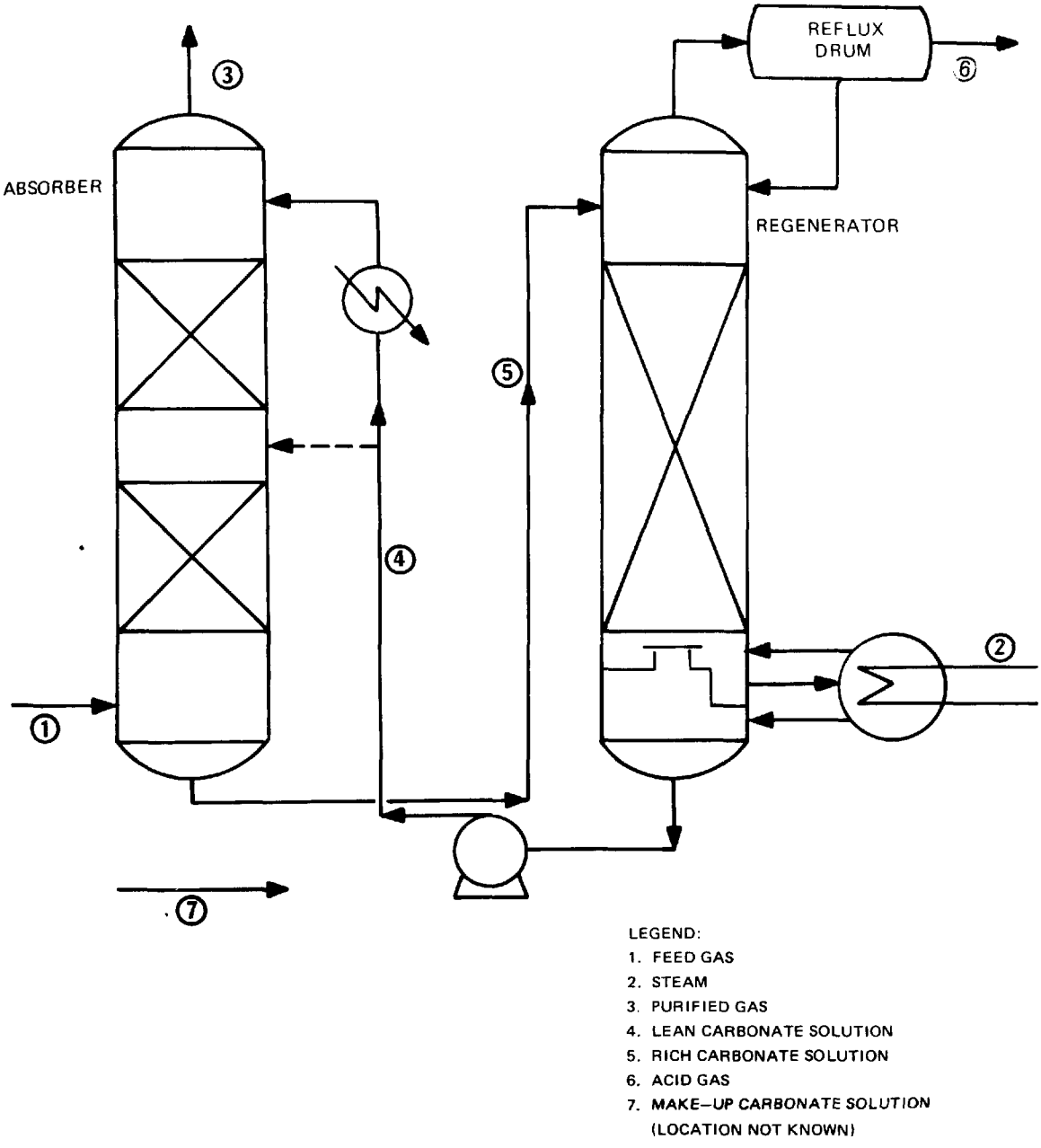

Figure B-17. Benfield Split Stream Process

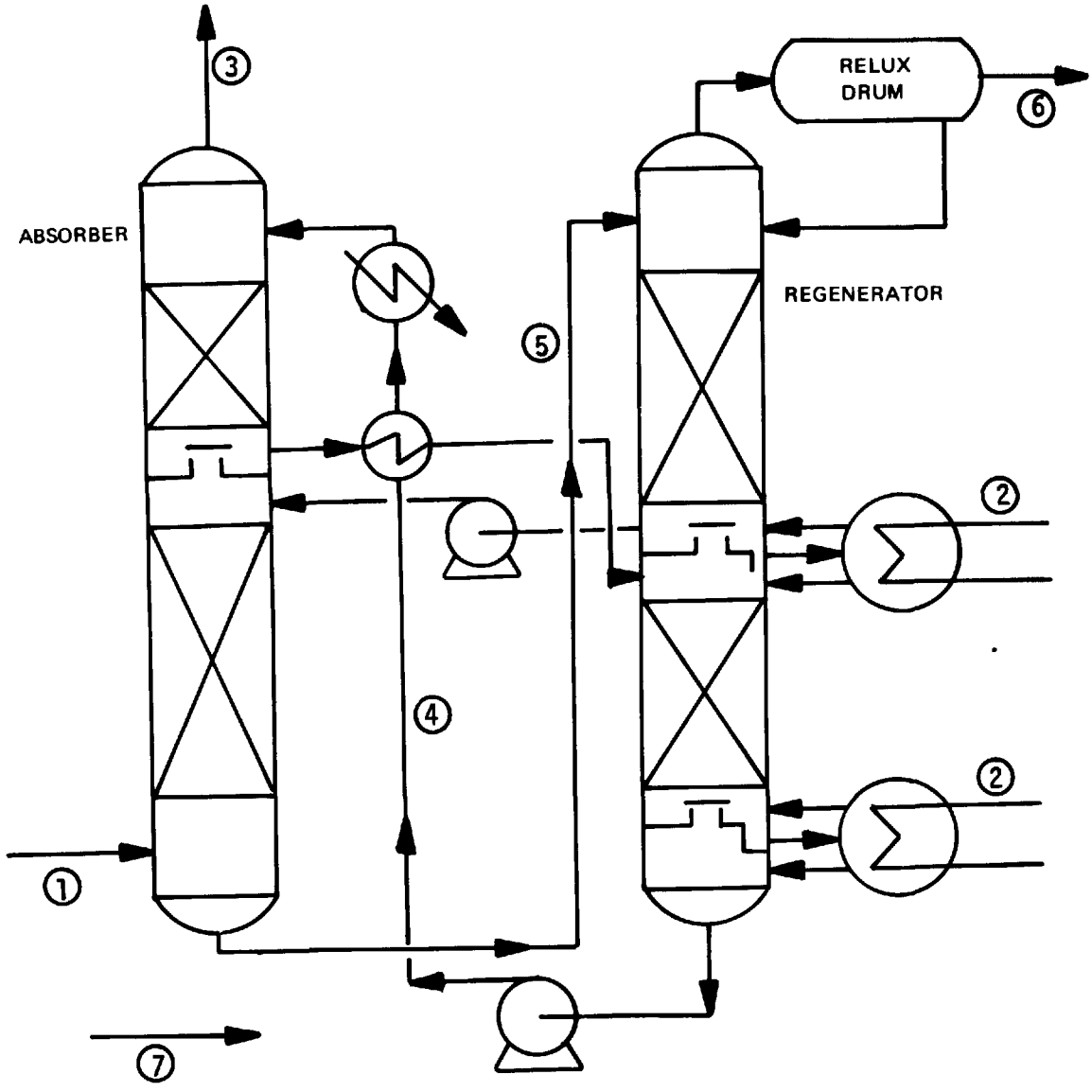

LEGEND:

1. FEED GAS
2. STEAM
3. PURIFIED GAS
4. LEAN CARBONATE SOLUTION
5. RICH CARBONATE SOLUTION
6. ACID GAS
7. MAKE–UP CARBONATE SOLUTION (LOCATION NOT KNOWN)

Figure B-18. Benfield Hipure Process

- Benfield Split Flow Process (for bulk CO_2 and/or H_2S removal)[3] - Gas feed enters the bottom of the absorber and flows countercurrent to lean carbonate solution. The bulk of the carbonate solution is introduced to an intermediate point of the absorber at about 383°K (230°F); the remainder is introduced at the top of the absorber at 339°K to 386°K (150°F to 200°F). Purified gas leaves the top of the absorber while rich solution is pumped to a regenerator. Rich solution is stripped with steam generated in a reboiler. Acid gases leave the regenerator through a reflux drum.

- Hipure Process (for obtaining low residual CO_2 and H_2S levels)[2] - Gas feed enters the bottom of the absorber and flows countercurrent to solutions which enter at the top and at the middle of the absorber. The solution entering the top is cooler than the one entering the middle. The two solutions, which may differ in composition, are handled in separate circuits (i.e., separately transported to the regenerator and are stripped of acid gases with steam). The separate solution circuits allow temperatures, solution compositions, and flow rates to be employed which take advantage of kinetic and equilibria differences between CO_2 and H_2S absorption to effect high H_2S or CO_2 removal.

2.2 Equipment - Packed or trayed tower design for absorber and regenerator. Carbon steel is used for tower and packing (provided that corrosion inhibitors are added to the circulating Benfield solution). Stainless steel is recommended for reboiler tubes, control valves and solution pumps[8].

2.3 Feed Stream Requirements

- Temperature(s): Feed stream temperature may vary from ambient to 450°K (350°F). Maximum carbonate solution temperature is usually less than about 400°K (280°F).

- Pressure[1]: Commercial installations have operated with feed gas pressures ranging from 0.7 to 7.6 MPa (100 to 1100 psia).

- Feed Gas Composition: Depending on the mode of operation, feed gases with CO_2 partial pressures below 34 to 100 KPa (5 to 15 psia) are not economically handled by the Benfield process[6]. Hydrogen sulfide containing gas streams cannot be economically treated unless some carbon dioxide is also present. This is because carbon dioxide would be lost from the stream during regeneration, allowing build-up of nonregenerable potassium sulfide[7].

2.4 Operating Parameters

- Temperature(s): Absorption and regeneration usually occur isothermally; practical operating temperatures range from 383°K to 400°K (230°F to 280°F).

- Pressure[1]: Absorber can operate above 0.7 MPa (100 psia). Economics of operation below 0.7 MPa (100 psia) are not favorable. Regenerator operates at slightly above atmospheric pressure.

- Loading: Stoichiometric maximum amounts of carbon dioxide that can react with the Benfield solution range from 0.04 Nm^3/ℓ (5.5 scf/gal) for 20% weight potassium carbonate to 0.095 Nm^3/ℓ (13 scf/gal) for 40% potassium carbonate. The amounts of solution circulated have been about 32 ℓ/Nm^3 (0.23 gal/scf) of CO_2 removed in the split stream mode and 34 ℓ/Nm^3 (0.24 gal/scf) of CO_2 removed in the Hipure mode for a feed gas containing 34% CO_2[2,10].

2.5 Process Efficiency and Reliability - The split flow mode of operation is capable of 95% plus removal of both CO_2 and H_2S[9,10]. Hipure operation is capable of reducing CO_2 levels to less than 10 ppmv and H_2S levels to about 1 ppmv[2,3]. From 75% to 95% removal of both COS and CS_2 and essentially complete removal of small amounts of mercaptans have been reported for commercial operations[10]. About 85% removal of thiophene has been reported in a commercial Benfield unit[10]. HCN and SO_2 are essentially completely removed from feed gases by Benfield units, although some buildup of hydrolysis/oxidation products (formate, $SO_3^=$, $SO_4^=$) in the carbonate solutions can occur[10].

The Benfield process can be designed to effect a high degree of H_2S removal while restricting CO_2 removal to 10% to 40%[10]. H_2S reacts approximately 3.6 times as fast as CO_2 with the Benfield solution, and gas-solution contact times can be adjusted to take advantage of these absorption rate differences. The relative absorption capacities and absorption rates for several feed gas constituents are listed in Table B-25[8,10].

2.6 Raw Material Requirements - Makeup Benfield solution contains 20% to 40% K_2CO_3 in water with activator and corrosion inhibitor[8]. Makeup requirements depend upon contaminant buildup (primarily formate and

sulfate), and leak prevention. Commercial plants typically use one solution inventory in a 3- to 5-year period.

TABLE B-25. CAPACITY AND ABSORPTION RATES OF CONSTITUENTS IN BENFIELD SOLUTION

Component	Approximate Capacity $Nm^3/10^3$ l (scf/gal)*	Relative Capacity	Relative Absorption Rate*
CO_2	0.027 (3.7)	1	1
H_2S	0.038 (5.2)	1.4	3.6
COS	(hydrolyzes to H_2S)		0.36
CS_2	(hydrolyzes to H_2S)		0.10
CH_3SH	0.08 (0.11)	0.03	1.2
NH_3	0.27 (0.37)†	0.10†	3.5†

*35% K_2CO_3 solution, 383°K (230°F; capacity at equilibrium partial pressure of 13.6 KPa (2 psia). Rate measured at solution loadings equivalent to equilibrium partial pressure of 13.6 KPa (2 psia).

†Solution capacity for ammonia according to recent data[12] is reported to be much greater than given in this table, although exact numbers are not publicly available.

2.7 Utility Requirements*

2.7.1 Split Flow Mode[2]:

Basis: feed gas at 393°K (250°F) and 4.3 MPa (630 psia) and containing 34% CO_2; outlet gas 1000 ppmv CO_2

Steam at 0.44 MPa (65 psia): 1.3 kg/Nm^3 (0.092 lbs/scf) of CO_2

Electric power: 0.036 kwh /Nm^3 (0.001 kwh /scf) of CO_2

Cooling water: ?

*Utility requirements are primarily dependent on feed and output acid gas concentrations.

2.7.2 Hipure Mode[5]:

Basis:	feed gas at 393°K (250°F) and 4.3 MPa (630 psia) and containing 5.4% CO_2, 1.5% H_2S; purified gas containing 100 ppmv CO_2, 2 ppmv H_2S
Steam at 0.44 MPa (65 psia):	3.6 kg/Nm^3 (0.22 lbs/scf) total acid gas
Electric power:	0.057 kWh /Nm^3 (0.0020 kWh /scf) of total acid gas
Cooling water:	4.1 l/Nm^3 (0.03 gal/scf) of total acid gas
Basis:	feed gas at 393°K (250°F) and 4.3 MPa (630 psi) and containing 44% CO_2, 9.4% H_2S; purified gas containing <1500 ppmv CO_2, 2 ppmv H_2S.
Steam at 0.44 MPa (65 psia):	1.9 kg/Nm^3 (0.13 lbs/scf) of total acid gases removed
Electric power:	53 kwh /Nm^3 (0.0019 kwh /scf) of total acid gases removed
Cooling water:	quantity not available; a cooling load of 371 kcal/Nm^3 (44 Btu/scf) is reported.

3.0 Process Advantages

- Commercially available and proven; over 400 Benfield units are in commercial operation.
- Benfield hot carbonate solution does not degrade significantly in the presence of COS, CS_2, mercaptans, HCN, NH_3, or particulate matter.
- Benfield systems (Hipure and split flow) can be designed so as to selectively remove bulk H_2S with minimal CO_2 removal by taking advantage of different absorption rates of CO_2 and H_2S. In this mode of operation, and depending on the feed composition, the bulk H_2S removal can generate a feed suitable for sulfur recovery in a Claus plant.
- Hipure mode of operation can achieve low levels of CO_2 and H_2S in outlet gas.
- Being a hot carbonate system, regeneration energy required in the Benfield process is generally lower than that required in the amine based systems.
- As with other carbonate systems, the Benfield process does not absorb hydrocarbons or other organics to the extent that physical solvents do.
- Depending on the mode of operation, the nearly isothermal regeneration and absorption eliminates or minimizes extensive heat exchange equipment.

4.0 Process Limitations

- Benfield solution can cause corrosion problems; however, addition of corrosion inhibitors to the Benfield solution allows mostly carbon steel construction.
- High removal efficiency requires moderate to high pressure operation.
- Hot carbonate systems cannot be operated in a regenerable manner for H_2S removal if CO_2 is not present in the gas stream (a minimum of about 1000 ppmv of CO_2 should be present in the feed gas).
- Energy costs for selective H_2S removal are strongly dependent on desired outlet concentration and could be prohibitive if a very high removal efficiency is desired.
- Depending on the H_2S and CO_2 levels in the feed gas and the mode of operation, the regenerated acid gas stream may not contain a high enough concentration of H_2S to allow sulfur recovery in a Claus plant.

5.0 Process Economics

Capital costs reported in a 1974 publication[3] for typical Benfield systems (either split flow or Hipure) are estimated at \$66-88/daily kg-mole CO_2 removal capacity (\$30-40/daily lb mole). Operating costs reported in a 1974 publication[2] for these systems are approximately \$30/10^4 Nm^3 of CO_2 removed (\$1/10^3 scf).

The capital cost for a Hipure system designed for selective H_2S removal (feed ~7000 ppmv H_2S, outlet gas ~200 ppmv) was estimated at about \$200/10^3 Nm^3 of daily feed capacity (\$6/10^3 scf)[3]. Operating cost for selective H_2S removal is highly dependent on energy costs since outlet gas purity and system pressure strongly influence energy consumption in the process. No operating cost data have been reported for the selective H_2S removal Hipure system.

6.0 Input Streams

6.1 Feed Gas (Stream 1) - see Tables B-26 and B-27.

6.2 Steam (Stream 2) - see Section 2.7.

6.3 Makeup Carbonate Solution (Stream 7) - The makeup aqueous solution contains 20% to 40% potassium carbonate and an undisclosed quantity of activator[8]. The solution usually also contains corrosion

TABLE B-26. LEVELS OF CO_2 AND H_2S IN COMMERCIAL BENFIELD PROCESS FEED, PRODUCT, AND ACID GAS STREAMS (STREAMS 1, 3 AND 6)

Applications (Ref.)	Feed Flow Rate 10^6 Nm3/day (10^6 scf/day)	Feed Gas (Stream 1)		Purified Gas (Stream 3)		Acid Gas* (Stream 6)	
		CO_2 (%)	H_2S (%)	CO_2 (%)	H_2S (ppmv)	CO_2 (%)	H_2S (%)
Natural Gas[1]	4.1 (150)	7	16	1.0	500	27	72
Natural Gas[1]	4.4 (165)	12.3	0.8	0.5	20	94	6
Natural Gas[6]	0.8 (31)	44.4	9.4	<0.1	1.2	83	17
LNG[2]	13 (500)	4.9	4.7	0.005	<1	52	48
H_2 Purification[2]	1.6 (58)	30.6	--	0.1	--	--	--
Partial Oxidation[1]	0.17 (6.4)	26	1.6	0.011	<1	94	6
Partial Oxidation[1]	1.4 (52)	5.2	0.93	0.95	45	85	15
Coal Gasification[1]	0.64 (24)	28	0.6	0.8	70	98	2

*Calculated levels based on feed and purified gas concentrations.

TABLE B-27. LEVELS OF TRACE SULFUR COMPOUNDS IN BENFIELD FEED AND PRODUCT GASES (STREAMS 1 AND 3)

	Application (Ref.)							
	Pilot Plant[10]		Pilot Plant[10]		Natural Gas[6]		Coal Gasification[6]	
Mode of Operation	Single Stage*		Hipure		Hipure		Split Flow	
Feed Flow Rate 10^6 Nm^3/day (10^6 scf/day)	0.53 (20)		0.53 (20)		0.84 (31)		0.64 (14)	
Composition (ppmv)	Feed	Product	Feed	Product	Feed	Product	Feed	Product
COS†	1300	11	1300	<1	820	27	~120‡	~30‡
CS_2	331	135	331	50	--	--	2.3	0.5
CH_3SH	75	34	75	6	--	--	4	<0.4
Thiophene							--	§

*Single stage operation is similar to the split flow system shown in Figure B-17, but with lean solution injection at the top of the absorber only.

†From 73% to 99% COS removal has been reported for commercial Benfield systems[10].

‡Actual concentration data not available; typical COS levels in Lurgi product gas are about 2% of H_2S levels[11]. About 75% removal of COS has been reported for the Benfield system operating on Lurgi gas at Westfield, Scotland[6].

§About 85% thiophene removal reported.

inhibitors (such as metavanadate). Quantitative data on makeup requirements are not publicly available.

7.0 Intermediate Streams

7.1 Lean Carbonate Solution (Stream 4) - No actual operating data available.

7.2 Rich Carbonate Solution (Stream 5) - No actual operating data available. See Section 2.5 for the capacity of a Benfield solution for various components.

8.0 Discharge Streams

8.1 Purified Gas (Stream 3) - see Tables B-26 and B-27.

8.2 Acid Gas (Stream 6) - No actual operating data available. See Table B-26 for calculated CO_2 and H_2S levels in this stream for several applications.

8.3 Blowdown Carbonate (Stream 8) - See Table B-28 for the composition of a Benfield solution after two years of operation at a Lurgi coal gasification facility.

9.0 Data Gaps and Limitations

Data gaps for the Benfield process relate primarily to the degree of removal of various trace constituents from gases likely to be encountered in coal gasification. Actual operating data for the Benfield unit which handled Lurgi gas at Westfield, Scotland are not available at present.

10.0 Related Programs

Under DOE sponsorship, test of a slagging Lurgi Gasifier are currently under way at Westfield, Scotland. If the product gas is treated in the existing Benfield unit, data may be generated which could help in the evaluation of hot carbonate process performance when applied to coal gasification.

The Synthane coal gasification pilot plant at Bruceton, Pa. has an installed Benfield unit for CO_2 and H_2S removal from product gas after ship conversion. As far as is known, this unit has not been operating to date.

TABLE B-28. COMPOSITION OF BENFIELD SOLUTION FOR THE UNIT OPERATING ON LURGI COAL GASIFICATION PRODUCT GAS AT WESTFIELD, SCOTLAND*(10)

Constituent	Concentration
K_2CO_3 (wt %)	22.0
$KHCO_3$ (wt %)	9.8
Formate† (wt %) (as HCO_2K)	2.1
Sulfide (ppm) (as KSH)	1500
$S_2O_3^{=}$ (ppm)	350
SCN^- (ppm)	Trace
SO_3 (ppm)	610
Suspended Solids (ppm)	15 to 800

*After two years of operation.

†Formate may be formed by hydrolysis of either CO and HCN in the alkaline carbonate solution according to the following reactions:

$$CO + OH^- \rightarrow HCO_2^-$$

$$HCN + H_2O + OH^- \rightarrow HCO_2^- + NH_3$$

REFERENCES

1. McCrea, D.H., The Benfield Activated Hot Potassium Carbonate Process: Commercial Experience Applicable to Fuel Conversion Technology, Symposium Proceedings: Environmental Aspects of Fuel Conversion Technology, II. (December 1975, Hollywood, Florida) EPA-600/2-76-149, June 1976, p. 217-223.

2. Benson, H.E. and Parrish, R.W., Hipure Process Removes CO_2/H_2S, Hydrocarbon Processing, April 1974, p. 81-22

3. McCrea, D.H. and Field, J.H., The Purification of Coal Derived Gases: Applicability and Economics of Benfield Processes, 78th National AIChE Meeting, Salt Lake City, Utah, August 18-20, 1974, Paper No. 29b.

4. Ruziska, P.A., Packings for Hot Carbonate Systems, Chemical Engineering Progress, Vol. 69, No. 2, February 1973, p. 67-70.

5. Dravo Corp., Handbook of Gasifiers and Gas Treatment Systems, ERDA Document No. FE-1772-11, February 1976.

6. Parrish, R.W. and Field, J.H., The Benfield Process in Coal Gasification, 24th Annual Gas Conditioning Conference, University of Oklahoma (Norman), March 14-15, 1974.

7. Kohl, A. and Riesenfeld, F., Gas Purification, Gulf Publishing Co., Houston, Texas, 1974.

8. Maddox, R.N., Gas and Liquid Sweetening, Campbell Petroleum Series, Norman, Oklahoma, 1974.

9. Benson, H.E., J. H. Field, et al, Improve Process for CO_2 Absorption Uses Hot Carbonate Solutions, Chemical Engineering Progress, Vol. 52, No. 10, 1956.

10. Parrish, R.W. and Neilson, H.B., Synthesis Gas Purification Including Removal of Trace Contaminants by the Benfield Process, ACS Symposium, Los Angeles, California, March 31-April 5, 1974.

11. Woodall-Duckham, Ltd, Trials of American Coals in a Lurgi Gasifier at Westfield, Scotland, Final Report, R&D Rpt. No. 105, FE-105, Crawley, Sussex, England, November 1974.

12. Information provided to TRW by D. H. McCrea of the Benfield Corporation, January 9, 1978.

GIAMMARCO-VETROCOKE (G-V) PROCESS

1.0 General Information

1.1 Operating Principles[1] - Hydrogen sulfide and carbon dioxide are removed from feed gas in two stages using alkaline solutions containing arsenate/arsenite. Hydrogen sulfide is first absorbed and oxidized indirectly by the arsenate solution and the resulting sulfur is recovered by flotation. The H_2S absorbing solution is regenerated by air. CO_2 is then absorbed from the H_2S free gas by a second alkaline arsenite solution. Rich CO_2 solution is regenerated at reduced pressure using hot air and/or steam.

1.2 Development Status - Commercially available.

1.3 Licensor/Developer[3] - Vetrocoke, Sp.A.
Marghera, Italy

1.4 Commercial Applications[2] - Several hundred plants have operated worldwide for treating natural gas, hydrogen and synthesis gas. One plant is known to treat natural gas in the United States.

2.0 Process Information

2.1 Flow Diagram (see Figure B-19 for the design of a G-V plant for removal of both CO_2 and H_2S from feed gas) - Although other versions of the process have been used commercially, this design illustrates the basic units both for H_2S and for CO_2 removal.

2.1.1 H_2S Removal - Feed gas enters the H_2S absorber where a solution containing potassium arsenite/arsenate absorbs H_2S and reacts, according to the reaction:

$$KH_2AsO_3 + 3H_2S \rightarrow KH_2AsS_3 + 3H_2O$$

The trithioarsenite then reacts with arsenate in a digester:

$$KH_2AsS_3 + 3KH_2AsO_4 \rightarrow 3KH_2AsO_3S + KH_2AsO_3$$

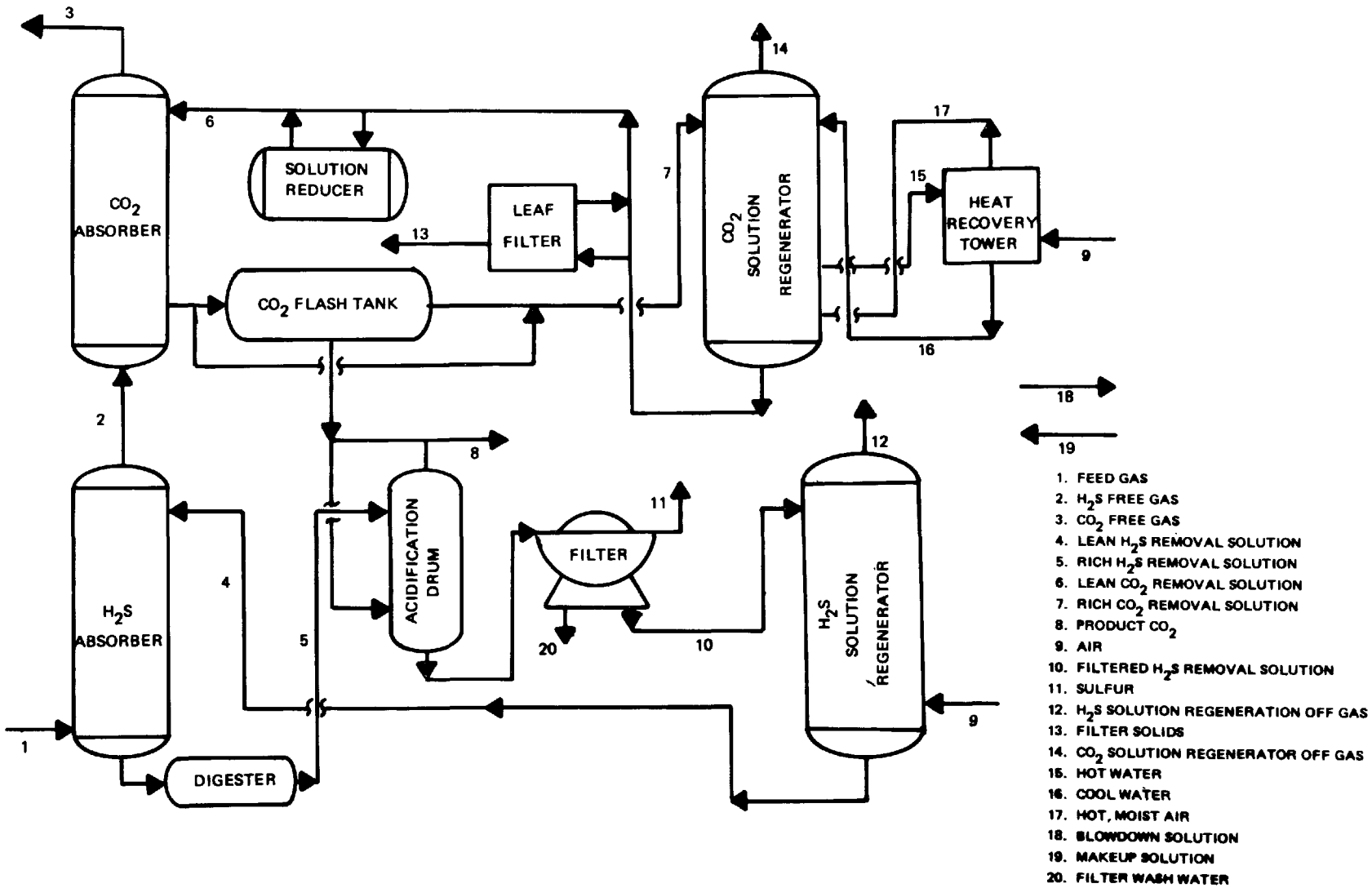

Figure B-19. Giammarco-Vetrocoke for H_2S and CO_2 Removal[3]

The monothioarsenate/arsenite solution is pumped to an acidification drum where CO_2 is added to lower the solution alkalinity to a point where the auto oxidation/reduction reaction below can occur:

$$3KH_2AsO_3S \rightarrow 3KH_2AsO_3 + 3S$$

The solution is filtered to separate elemental sulfur and is sent to a regenerator where air is added to oxidize part of the arsenite according to:

$$6KH_2AsO_3 + 3O_2 \rightarrow 6KH_2AsO_4$$

2.1.2 CO_2 Removal - Gas from the H_2S absorber enters a CO_2 absorber where it encounters a K_2CO_3/As_2O_3 solution. CO_2 is absorbed according to the following reaction:

$$6CO_2 + 2K_3AsO_3 + 3H_2O \rightarrow 6KHCO_3 + As_2O_3 \quad \text{and}$$

$$CO_2 + K_2CO_3 + H_2O \rightarrow 2KHCO_3$$

The CO_2 rich solution is flashed to release part of the absorbed CO_2, and is pumped to a regenerator column to be stripped of the remaining CO_2 by air (or stream) at slightly above atomospheric pressure. Flashed CO_2 is either vented or used to acidify digested rich H_2S absorber solution.

2.2 Equipment[2] - Packed towers for absorption and CO_2 regeneration; open towers for sulfur flotation. Carbon steel is commonly employed without undue corrosion problems. Sulfur is recovered by rotary type filters.

2.3 Feed Stream Requirements[2] - For absorption of H_2S feed, pressures as low as 0.1 MPa (15 psia) and temperatures as low as 410°K (100°F) can be handled. For CO_2 absorption, higher feed pressures are necessary (CO_2 removal efficiency decreases with decreasing CO_2 partial pressure). The upper temperature limit is about 523°K (300°F), the approximate atmospheric boiling point of the G-V solution (regeneration is conducted at near atmospheric pressure).

Feed composition (e.g., trace sulfur and nitrogen species, particulates, organics) is reported not to affect G-V performance.

2.4 Operating Parameters[2,3]

Absorbers:

Temperature: 410°K - 523°K (100°F - 300°F)

Pressure: 0.1 - 6.7 MPa (15 - 1000 psia)

H_2S absorption solution loading: 0.0068 Nm^3 H_2S/l (.94 scf H_2S/gal)

CO_2 absorption solution loading: .030 Nm^3 CO_2/l (4.09 scf CO_2/gal)

Regenerators:

Temperature: 410°K - 523°K (100°F - 300°F)

Pressure: slightly above atmospheric

Air for H_2S solution regeneration: 6.2 - 8.3 Nm^3/kg H_2S (106 - 141 scf/lb H_2S)

Air for CO_2 solution regeneration: ?

2.5 Process Efficiency and Reliability[1] - Process is capable of reducing H_2S levels to <1 ppmv and CO_2 to less than 1000 ppmv. COS and CS_2 and mercaptans are reported to be partially removed, although no actual operating data are available.

At one large natural gas treating plant, corrosion was reported not a problem, and the G-V process was reliable and met design specifications. No data for other facilities are currently available.

2.6 Raw Material Requirements[2] - Makeup solution requirements - quantities not known. H_2S absorption solution contains from 0.5 to 15% K_2CO_3; arsenic (as As_2O_3) concentration not known. CO_2 absorption solution contains 20% - 40% K_2CO_3; arsenic concentration not known.

2.7 Utility Requirements[2]

	CO_2 Circuit	H_2S Circuit
Steam	0.56 kg/Nm^3 SO_2 removed (.033 lbs/scf)	?
Air	?	6.2 - 8.3 Nm^3/kg H_2S removed (106 - 141 scf/lb H_2S)
Electricity	23 kwh/Nm^3 CO_2 removed (0.672 kwh/10^3 scf)	?

2.8 Chemical Hazards - Alkaline arsenite/arsenate solutions are highly toxic and present both an occupational health and an environmental hazard. Care must be exercised in handling G-V solutions and in the prevention and cleanup of spills and leaks.

3.0 Process Advantages

- Can achieve lower levels of H_2S and CO_2 than conventional or amine activated hot carbonate systems.
- Has relatively low utility requirements.
- Produces elemental sulfur rather than a gaseous H_2S steam.
- Produces a CO_2 offgas with a very low H_2S concentration.
- Unlike conventional carbonate systems, G-V can successfully treat feed gases containing H_2S without significant amounts of CO_2[4].

4.0 Process Limitations

- The arsenite/arsenate solution(s) require special handling and precautions.
- Discharge streams such as the solution blowdown and filter wash water will contain arsenic compounds.
- High CO_2 removal requires moderate to high pressure operation.
- Product sulfur may require dearsenation prior to sale.
- H_2S removal is practical only if the feed gas contains less than 15% H_2S and sulfur to be removed is under 14 tonnes (15 tons) per day[3].

5.0 Process Economics

No current data are available.

6.0 Input Streams

6.1 Feed Gas (Stream 1) - see Table B-29.

6.2 Air (Stream 9) - see Section 2.6.

6.3 Makeup Solution (Stream 19) - No data available.

7.0 Intermediate Streams

7.1 Lean H_2S Removal Solution (Stream 4) - No data available.

7.2 Rich H_2S Removal Solution (Stream 5) - No data available.

7.3 Lean CO_2 Removal Solution (Stream 6) - No data available.

7.4 Rich CO_2 Removal Solution (Stream 7) - No data available.

7.5 Filtered H_2S Removal Solution (Stream 10) - No data available.

8.0 Discharge Streams

8.1 H_2S Free Gas (Stream 2) - See Table B-29.

8.2 CO_2 Free Gas (Stream 3) - See Table B-29.

8.3 Product CO_2 (Stream 8) - 99+% CO_2 with less than 1 ppmv H_2S can be obtained[3].

8.4 Sulfur (Stream 11) - Washed sulfur contains about 0.3% arsenic[2] - No other data available.

8.5 H_2S regeneration offgas - No data available.

8.6 Filter Solids - No data available; may consist primarily of elemental sulfur.

8.7 CO_2 Solution Regeneration Offgas (Stream 14) - No data available; will consist primarily of air and CO_2.

8.8 Blowdown Solution (Stream 18) - No data available.

8.9 Filter Wash Water (Stream 20) - No data available.

TABLE B-29. PERFORMANCE OF A GIAMMARCO-VETROCOKE PLANT OPERATING ON NATURAL GAS[2,3]

Stream	Feed Gas	H_2S Free Gas	CO_2 Free Gas
Flow Rate Nm^3/day (scfd)	$5x10^6$ ($180x10^6$)	$5x10^6$ ($180x10^6$)	$3.8x10^6$ ($133x10^6$)
Temperature, °K (°F)	311 (100)	--	323 (122)
Pressure, MPa (psia)	6.9 (1015)	--	--
Composition			
CO_2	28%	~28%	<2%*
H_2S	0.2%	40 ppmv	<4 ppmv

*Levels of 0.05% CO_2 can be obtained.

9.0 Data Gaps and Limitations

Data gas pertains primarily to the composition and flow rates of various intermediate and discharge streams. In particular, little data are available on product sulfur, filter solids, blowdown solution, and sulfur wash water. Also, no data are available regarding trace constituents in feed and product streams. Certain features of the process (e.g., the solution reducer shown in Figure B-19) are not well defined by available information.

10.0 Related Programs

No programs are known to be under way or planned which are aimed at an environmental assessment of the G-V process.

REFERENCES

1. Maddox, R. N., Gas and Liquid Sweetening, Campbell Petroleum Series, Norman, Oklahoma, 1974.

2. Kohl, A., and Riesenfeld, F., Gas Purification, Gulf Publishing Company, Houston, Texas, 1974.

3. Sweet-Gas Process Makes U.S. Debut, Chemical Engineering, September 19, 1960, p. 166-69.

4. Parrish, R. W. and Field, J. H., The Benfield Process in Coal Gasification, 24th Annual Gas Conditioning Conference, University of Oklahoma (Norman), March 14-15, 1974.

STRETFORD PROCESS

1.0 General Information

1.1 Operating Principles - Sulfur recovery based upon the liquid phase oxidation of H_2S to elemental sulfur in an alkaline solution of metavanadate and anthraquinone disulfonic acid (ADA) salts.

1.2 Developmental Status - Commercially available.

1.3 Licensor/Developer - Originally developed by the British Gas Corporation. Licensors include:*

Woodall-Duckham (USA) Limited
Division of Babcock Contractors, Inc.
921 Penn Avenue
Pittsburgh, Pennsylvania 15222

Peabody Engineered Systems
39 Maple Tree Avenue
Stamford, CT 06906

Wilputte Corporation
152 Floral Avenue
Murray Hill, N.J. 07974

Black, Sivalls and Bryson, Inc.
B.S. & B. Process Systems Division
4242 S.W. Freeway
Houston, TX 77027

1.4 Commercial Applications[2] - 50 Stretford units are currently in operation, with capacities ranging from 2.7×10^3 to $864 \times 10^3 Nm^3D$ (0.1 to 32 MMscfd). The range of installed Stretford units includes purification of coke oven and producer gases as well as H_2S removal from natural gas. It has also been applied to clean Claus plant tail gas in petroleum refineries.

*Each licensor incorporates its own process refinements. These refinements are generally aimed at reducing the quantity of wastes generated and reagent used in the sulfur recovery section. The following data sheets represent the process by Woodhall-Duckham.

2.0 Process Information

2.1 Flow Diagram - See Figure B-20.

- Process Description - A raw gas stream is contacted countercurrently with an aqueous solution of ADA (anthraquinone disulfonic acid), vanadium, anhydrous citric acid and sodium carbonate. H_2S in the gas is oxidized to elemental sulfur by the vanadic salt, while the salt is reduced to the vanadous form. The reactions involved are: $H_2S + Na_2CO_3 \rightleftarrows NaHS + NaHCO_3$ in the absorber and $4\ NaVO_3 + 2NaHS + 2H_2O \rightleftarrows Na_2V_4O_9 + 2S + 4NaOH$ and $Na_2V_4O_9 + 2NaOH + H_2O + 2ADA \rightleftarrows 4NaVO_3 + 2ADA$ (reduced) in the holding tank. The reduced liquor flows to the oxidizers* where the vanadium is restored to the vanadic form by a redox reaction with the ADA. Air is blown through the oxidizers to reoxidize the ADA and separate the sulfur by froth flotation. This reaction is: $2ADA$ (reduced) $+ O_2 \rightleftarrows 2ADA + H_2O$. The sulfur float is sent to a centrifuge and separator where the product sulfur (99.5% purity) is obtained. Side reactions involving HCN and other (than H_2S) sulfur and nitrogen compounds require that a portion of the solution be blown down to prevent buildup of these contaminants.

2.2 Equipment[5] - Conventional absorbers, oxidation tanks and elemental sulfur recovery equipment. The sulfur equipment employed varies by licensor. Although not indicated in Figure B-20, it is often necessary to incorporate a heater and/or evaporator in the Stretford circuit to control water inventory.

2.3 Feed Stream Requirements

Pressure: unaffected by pressure[2]

Temperature: ambient to 322°K (120°F)[2]

Loading: usually for H_2S loading (concentration) up to 15%

Other: process modifications, such as prewashing, may be required if HCN, COS or CS_2 are present[3] since COS and CS_2 are not removed in the process and HCN acts in an irreversible manner with the Stretford solvent (prewashing is used for high HCN concentrations and increased blowdown for low, below 50 ppm, HCN concentrations)[2].

---

*When the Stretford process is operated on certain high pressure streams, a flash drum may be incorporated between the absorber and the primary oxidizer such that hydrocarbons are recovered at a low pressure fuel gas stream rather than released to the atmosphere.[5]

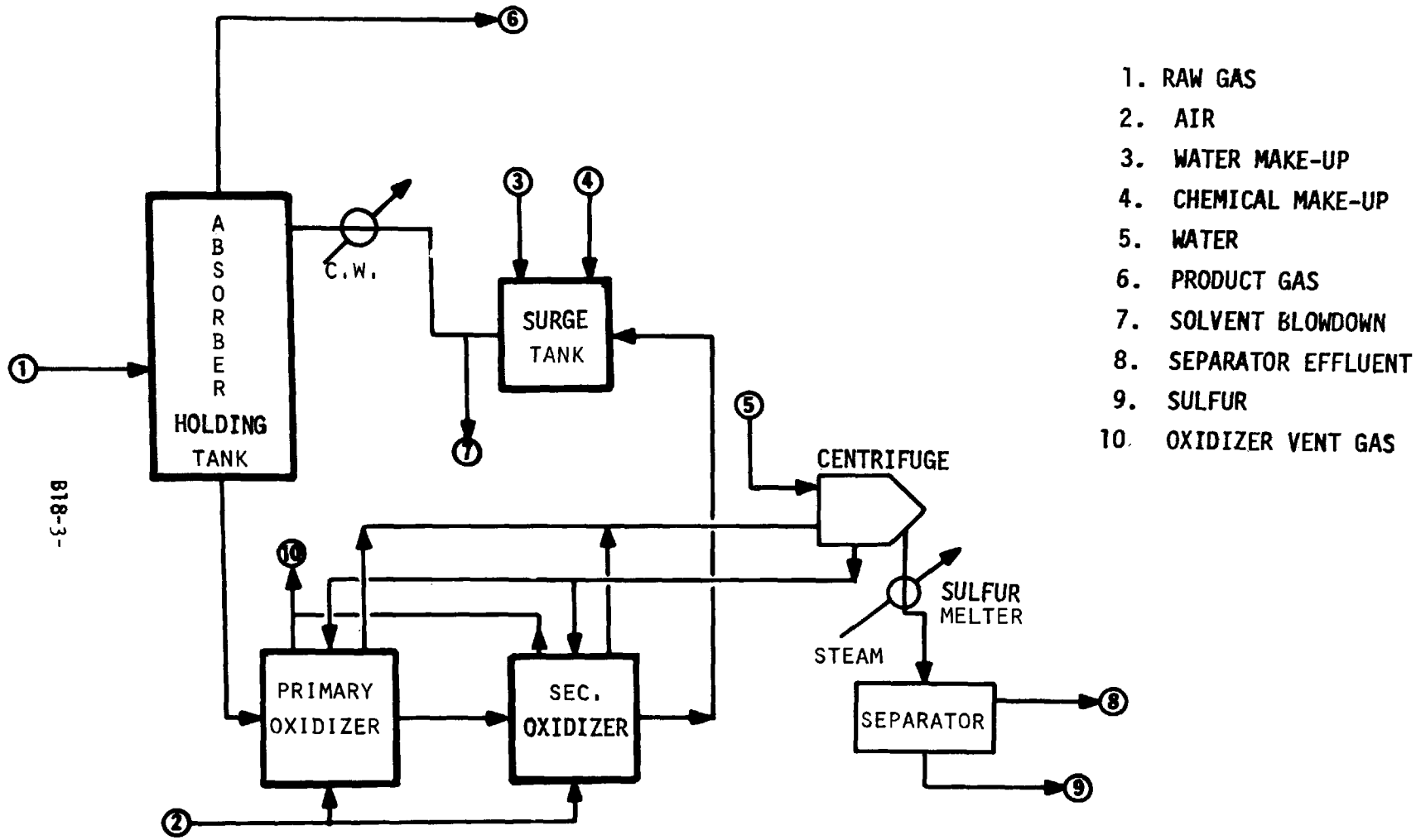

Figure B-20. Stretford Process Flow Sheet(1)

2.4 Operating Parameters

- Absorption - Temperature: ambient to 322°K (120°F)

  Pressure: to 7.0 MPa (1000 psia)

  Loading: to 15% by volume

- Regeneration - Temperature: ambient

  Pressure: atmospheric

2.5 Process Efficiency and Reliability - H_2S concentrations can be reduced to less than 1 ppm; COS and CS_2 are not removed to a significant degree[1]. Reliability is high, with all stages free of corrosion tendencies.

2.6 Raw Material Requirements[1]

- Make-up Chemicals - Basis: gas containing 1% H_2S and 0.2% HCN without separate HCN removal in kg/10^6 Nm^3 (lb/MMscf), with reductive incineration for spent solution for its regeneration.*

  ADA: 84 (5)

  Sodium Vanadate: 1.0 (0.06)

  Citric Acid: 168 (10)

2.7 Utility Requirements[1] - Same basis as Section 2.6.

Steam @ 0.4 MPa (65 psia): 12,400 kg/10^6 Nm^3 (730 lbs/10^6 scf)

Electricity: 700 kwh/10^6 Nm^3 (19 kwh/10^6 scf)

Water: 0.3 x 10^6 l/10^6 Nm^3 (2160 gal/10^6 scf)

Fuel: 36 kcal/10^6 Nm^3 (4 x 10^6 Btu/10^6 scf)

3.0 Process Advantages[4]

- Can reduce the H_2S concentration to less than 1 ppmv.
- Capable of relatively high turndown ratios.
- Relatively low make-up chemical requirements.

*Fuel is used for reductive incineration of fixed salts in Stretford solution blowdown in the specific design considerated[1].

- Relatively low maintenance requirements.
- Not pressure sensitive

4.0 Process Limitation[4]

- Except for removal of minor quantities of methyl mercaptans, sulfur compounds other than H_2S (e.g., COS and CS_2) are not removed.
- High CO_2 concentrations in the feed gas can cause pH reduction and reduced efficiency. Absorbers are enlarged to accommodate high CO_2 concentrations.
- Undesirable side reactions (such as $2NaHS + 2O_2 \rightarrow Na_2S_2O_3 + H_2O$) can occur causing thiosulfate formation and increasing solvent blowdown requirements. This occurs where the system is operating beyond design limits and O_2 is contacted in the absorber or holding tank.
- HCN in feed gas reacts with absorption solution to form thiocyanate. Thiocyanate is stable in solution and must be purged to avoid reduction in absorption efficient.
- Not usually economical for gas streams containing greater than 15% H_2S.

5.0 Process Economics

Capital costs are reported for a 0.45×10^6 Nm^3/day (15 MMscfd) natural gas sweetener operating at 0.3 MPa (45 psia) and better than 99.8% efficiency as $1 million in April 1975 on a West Coast basis[2]. Capital costs in 1964 dollars of a Stretford unit operating on a coal gas stream of 0.33×10^6 Nm^3/day (11 MMscfd) with better than 99.9% efficiency are reported as $330,000[3]. Operating costs will be dependent on the credit taken for salable sulfur[3].

6.0 Input Streams[4] - The following data are from a design for a Stretford unit treating lean acid gas from the Rectisol unit at El Paso Natural Gas Burnham coal gasification facility.

6.1 Gaseous

- Raw gas (Stream No. 1)

	Vol %		Vol %
CO_2	96.0	CH_4	0.53
H_2S	0.74	C_2H_4	0.22
COS	77ppmv	C_2H_6	0.30
CS_2	2ppmv	H_2	0.43
HCN	30ppmv	H_2O	1.6
CO	0.17		

- Air (Stream No. 2): ?

6.2 Liquid

- Water make-up (Stream No. 3): ?
- Chemical make-up (Stream No. 4): ?
- Water to centrifuge (Stream No. 5): ?

7.0 Intermediate Streams - None

8.0 Discharge Streams[4] - Based on treatment of the feed gas reported in Section 6.1.

8.1 Gaseous

- Product Gas (Stream No. 6)

	Vol %		Vol %
CO_2	99.0	CH_4	0.52
H_2S	8 ppmv	C_2H_4	0.22
COS	75 ppmv	C_2H_6	0.29
CS_2	2 ppmv	H_2	0.42
HCN	0	H_2O	4.32
CO	0.16		

- Oxidizer vent gas (Stream No. 10): ?

8.2 Liquid

- Solvent blowdown (Stream No. 7)

  Production Rate: 24.7 kg/10^6 Nm^3 (1.46 lbs/10^6 scf)

  Composition

H_2O	80.0
$Na_2S_2O_3$	10.8
NaSCN	4.4
$NaVO_3$	0.7
ADA	1.1
$NaHCO_3$+Na_2CO_3	3.0

- Separator effluent (Stream No. 8): ?

8.3 Solids

- Sulfur (Stream No. 9): Nominally 99.5% sulfur with small amounts of "contaminants" such as vanadium salts, sodium thiocyanate.

9.0 Data Gaps and Limitations

Several limitations exist in Stretford operating data:

- Lack of stream characterizations for most effluent streams, including trace and minor constituents.
- Actual operating data is limited from the many varied installations where the Stretford process has been employed.
- Lack of updated cost information for Stretford designs suitable for treating high CO_2, low H_2S gases.

10.0 Related Programs - The Synthane pilot plant at Bruceton, Pennsylvania, incorporates a Stretford unit for H_2S removal from concentrated acid gases generated by a Benfield unit(6). Also, a commercial scale Stretford unit is being installed at the SASOL S.A. Lurgi coal gasification facility(7). The operation of these units could generate useful data on the applicability of the Stretford process to coal gasification.

REFERENCES

1. Handbook of Gasifiers and Gas Treatment Systems, Dravo Corp., ERDA FE-1772-11, February 1976.

2. Gas Processing Handbook, Hydrocarbon Processing, April 1975.

3. Ellwood, P., Meta-Vanadates Scrub Manufactured Gas, Chemical Engineering, July 20, 1964.

4. Catalytic, Inc., The Stretford Process, unpublished work performed for the EPA, Contract No. 68-02-2167.

5. Information supplied to TRW by A. J. Grant of Woodall-Duckham, December 5, 1977.

6. Haynes, W. P., Synthane Process Update, Mid 1977, 4th International Conference on Coal Gasification, Liquefaction and Conversion, August 2, 1977.

7. Atkins, T. W., Problems Associated with Controlling Sulfur Emissions from High-Btu Coal Gasification Plants, C. F. Braun and Company report to ERDA, under Contract No. E(49-18)-2240, December 1976.

ZINC OXIDE ADSORPTION PROCESS

1.0 General Information

1.1 Operating Principles - Removal of hydrogen sulfide from a gas by reaction with zinc oxide (ZnO) to form zinc sulfide. Zinc oxide beds are used only for removing the last traces of sulfur after some other treatment has removed all but a few parts per million. When hydrogen is present in the gas, ZnO catalyzes the reduction of COS, CS_2 and organic sulfur to H_2S which is adsorbed.

1.2 Development Status - Zinc oxide guard beds have been used as the final sulfur cleanup to protect reforming catalysts since the mid-1930's. Their performance is proven in hundreds of commercial plants.

1.3 Licensor/Developer[5] - The technology of using hot zinc oxide cleanup beds for hydrogen sulfide removal is widely known and readily available from catalyst manufacturers, engineering design and construction contractors, and private consultants. No dominant patent exists.

Some suppliers of catalyst-grade zinc oxide are:

Catalysts and Chemical Inc., Louisville, Kentucky
Girdler Chemicals, Louisville, Kentucky
Harshaw Catalysts, Cleveland, Ohio
Katalco Corp., Oak Brook, Illinois
New Jersey Zinc Co., Bethlehem, Pennsylvania

1.4 Commercial Applications

- Guard beds to protect reforming catalysts.
- Guard beds to protect methanation catalysts.
- Guard beds to protect other Raney nickel catalysts.

2.0 Process Information

2.1 Flow Diagram (see Figure B-21) - The gas flow piping is designed so that either vessel may be first in series or may be isolated for catalyst dumping and re-loading. When the sour feed gas to the zinc oxide guard beds is sufficiently pure, it may be possible to operate only a single bed with removal and replacement of zinc oxide during routine plant shutdown.

2.2 Equipment - One or more pressure vessels containing catalyst granules.

2.3 Feed Stream Requirements

Composition: Total sulfur in all forms should be as low as can be achieved with the upstream acid gas treatment step. The zinc oxide beds are an expensive means of sulfur removal; they should only be used to remove the final traces which are beyond the capability of other processes.

Water vapor content should be well below saturation. Zinc oxide beds have been wrecked by an accidental spill of liquid water from the upstream scrubber.

Temperature:[1,2] Both the reaction rates and sulfur loading capacity improve with rising temperature (see Figure B-22). Cold beds would have to be greatly enlarged because of reduced sulfur loading capacity. Furthermore, cold beds of zinc oxide would have a negligibly slow rate of destruction of carbonyl sulfide and thiophene. Therefore, in practice most zinc oxide guard beds are operated hot, 589°K to 722°K (600°F to 840°F).

Pressure: Pressure is not critical.

2.4 Operating Parameters

Temperature: See Section 2.3.

Pressure: As required for other steps of coal gasification process.

Catalyst Loading: The maximum sulfur loading capacity of zinc oxide, as shown in Figure B-22. The maximum recommended loading is only three percent when the desired exit gas specification is 0.02 ppm H_2S[2].

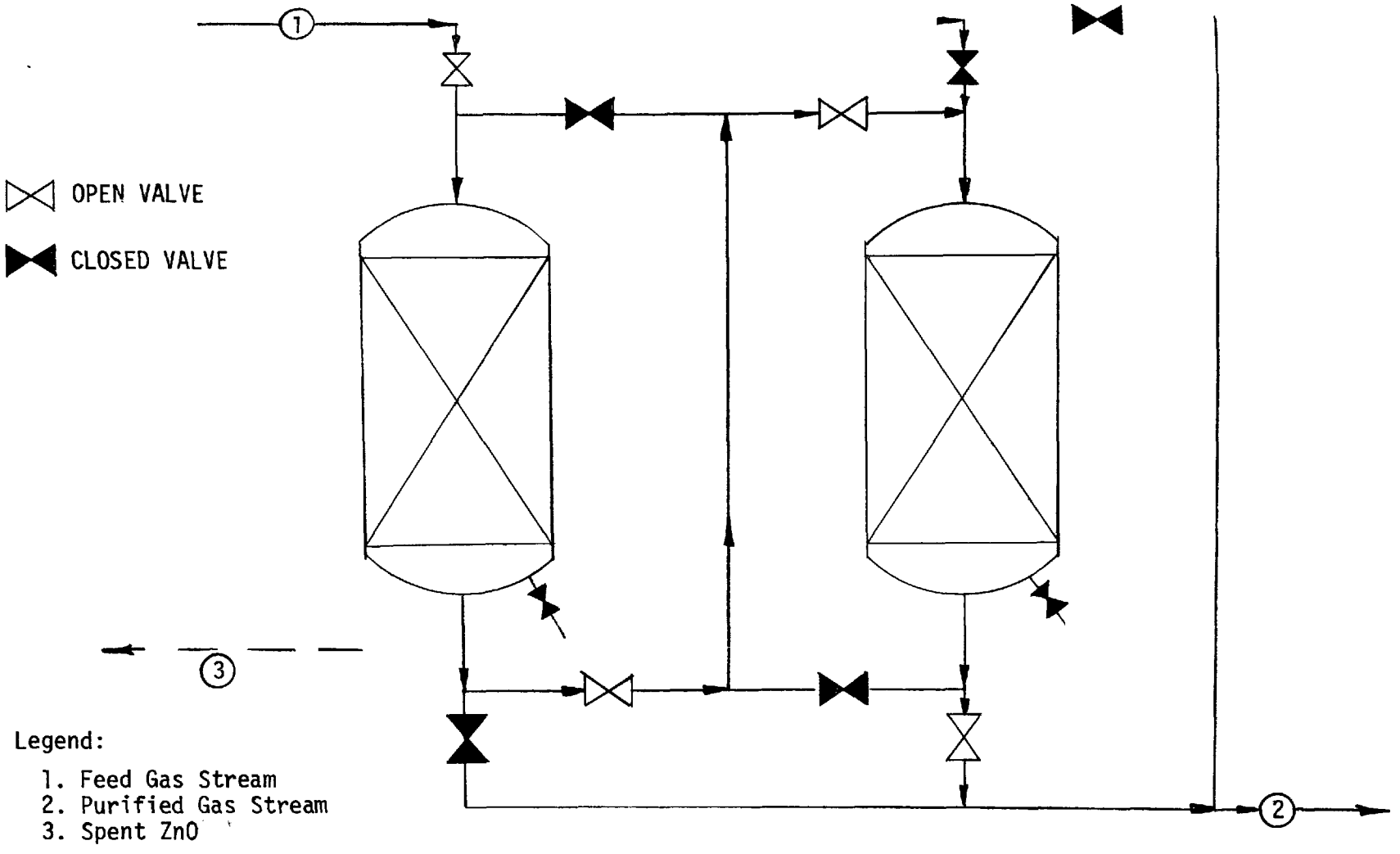

Figure B-21. Zinc Oxide Adsorption Process[2]

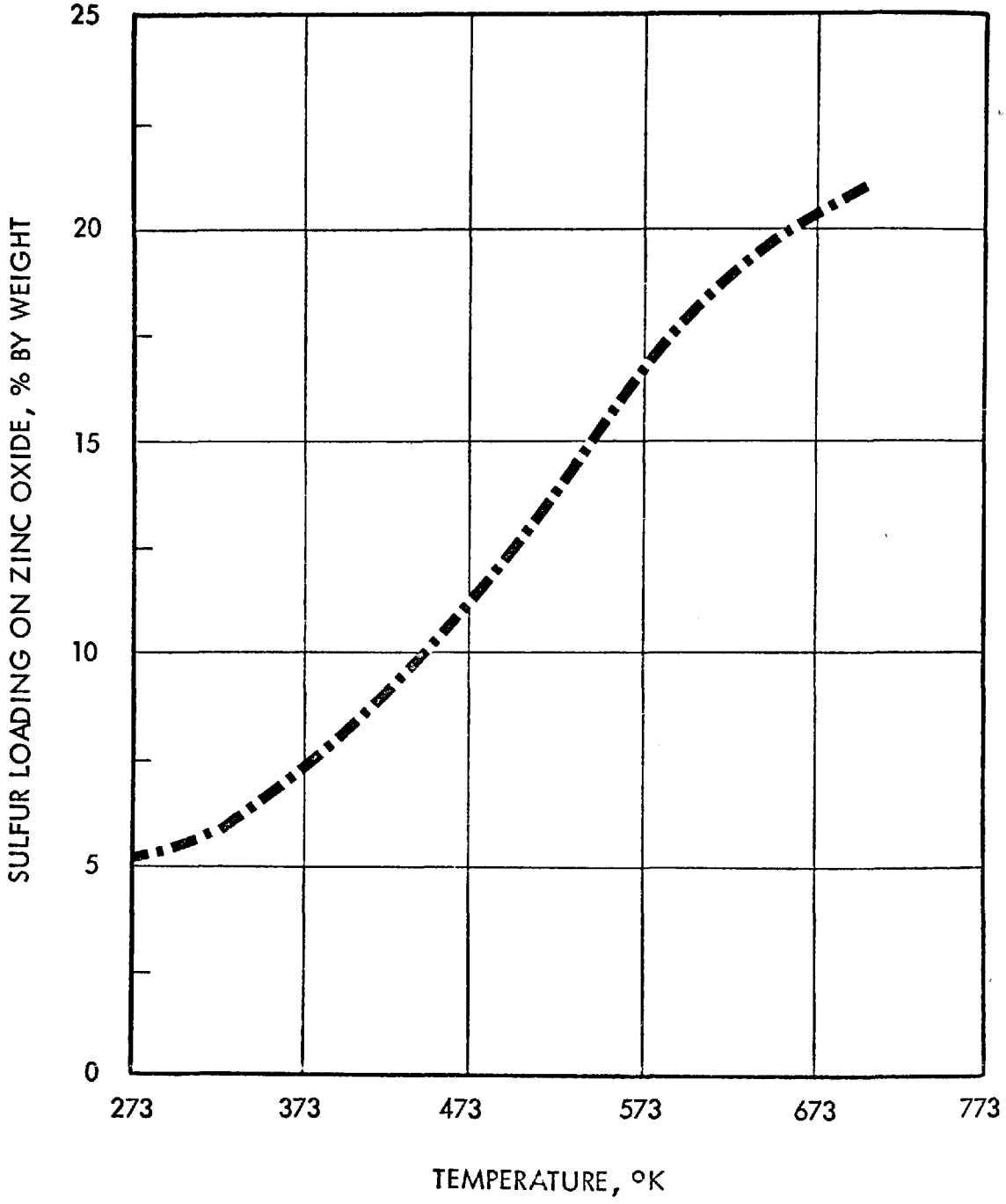

Figure B-22. Sulfur Loading Capacity of Zinc Oxide as a Function of Temperature[5]

Space Velocity: 2000 to 20,000 reciprocal hours[2]. Pressure drop considerations and the rate of destruction of the more refractory contaminants present in the feed gas, particularly carbonyl sulfide, carbon disulfide, and the thiophenes, are likely to determine space velocity for most coal-derived gases[5].

2.5 Process Efficiency and Reliability - ZnO is a very effective adsorbent for H_2S. The equilibrium concentration of H_2S over ZnO can be as low as 0.0005 ppm at 573°K (573°F)[5]. In practice, process efficiency is determined by system design and operating conditions. Zinc oxide absorption of sulfur is a thoroughly proven commercial process.

2.6 Raw Material Requirements - In a two-bed system, the first bed should be dumped just before breakthrough. This would typically be at about 90 percent of maximum loading. Then the beds should be reversed in sequence. In a single-bed system, the entire inventory of zinc oxide is usually replaced annually.

2.7 Utility Requirements - Zinc oxide guard beds use no utilities.

3.0 Process Advantages

- Proven process for sulfur removal.
- Highest purity product gas of any sulfur guard process available.
- Low capital cost.
- Low operating cost when sour feed gas contains only residual traces of sulfur.
- Process is not pressure sensitive.

4.0 Process Limitations

- Sulfur-rich gases cannot be economically treated with zinc oxide.
- Hot operation is preferred.
- Arsenic, halogens, and ammonia are not removed by the process.
- Loading capacity is temperature dependent; see Figure B-22 for detailed data.
- Liquid water will severely damage the process, with possible complete degradation of zinc oxide bed.

5.0 Process Economics

Costs depend on specific application. The capital investment and operating cost of zinc oxide treatment are likely to be small items in a coal gasification plant budget.

6.0 Input Streams

See Table B-30.

7.0 Discharge Streams

7.1 Product Gas - See Table B-30.

7.2 Spent Adsorbent - ZnO is typically discarded when sulfur content reaches 15% - 20%. Quantity generated depends on specific application. In smaller applications, spent ZnO is disposed of; for larger applications it may be reclaimable (e.g., at zinc smelters.)

8.0 Data Gaps and Limitations

- Process applicability to coal conversion process gas purification system not studied/established.
- Definition of maximum allowable concentrations of various contaminants in the feed gas (e.g., trace metals, HCN, carbonaceous matter) has not been determined.

9.0 Related Programs

No data available.

REFERENCES

1. Kohl, A. L. and Riesenfeld, F. C. Gas Purification, 2nd ed., Gulf Publishing Co., Houston, Texas, 1974.

2. Dravo Corp., Handbook of Gasifiers and Gas Treatment Systems, ERDA No. FE-1772-11, Pittsburgh, PA, 1976.

3. Institute of Gas Technology, Pipeline Gas from Coal-Hydrogenation (IGT Hydrogasification Process) Project 9000 Quarterly Report No. 1, July-September 1976, ERDA No. FE-2434-4, Chicago, Illinois, 1976.

4. Lee, B. S., Status of the HYGAS Program, 7th Synthetic Pipeline Gas Symposium, Chicago, Illinois, October 27, 1976.

5. Katalco Corporation, Catalyst Handbook, Oak Brook, Illinois, 1970.

TABLE B-30. TYPICAL PERFORMANCE DATA FOR THE SULFUR GUARD SYSTEM AT THE HYGAS PILOT PLANT*(3,4)

	Feed Gas	Product Gas
Temperature, °K	617	617
Pressure, 10^6 Pa	7.64	7.56
Major Components, % (dry)		
Hydrogen	50.2	50
Carbon Monoxide	31.11	31
Carbon Dioxide	--†	--†
Methane	--†	--†
Ethane	--†	--†
Total Sulfur, as H_2S	0.6ppm	--†
Sulfur Compounds, ppmv		
H_2S	0.53	0.003
COS	0.02	0.045
CS_2	0.00	0.00
CH_3SH	0.04	0.002
CH_3SCH_3 and CH_3CH_2SH	0.03	0.000
Oxygen Compounds, ppmv		
Methanol	0	280
Ketones	0	7
Acids	0	15
Aldehydes	0	15

*Include a caustic wash and ZnO guard bed.
†Not available.

IRON OXIDE ADSORPTION PROCESS

1.0 General Information

1.1 Operating Principle - Removal of H_2S from a gas stream by adsorption on a fixed or fluidized bed of iron oxide ($2Fe_2O_3 + 6H_2S \rightarrow 2Fe_2S_3 + 6H_2$). The bed is regenerated by treatment with air to oxidize the chemisorbed sulfide to either elemental sulfur (low temperature) or sulfur dioxide (high temperature). The chemisorption reaction is not pressure sensitive.

1.2 Development Status[1,2,3,4] - Use of the fixed bed for low temperature applications dates back to 1849 and the process is widely used currently. Appleby-Frodingham Steel Co. at Appleby, England operates a 673°K (752°F), 63.750 Nm^3/D (2.5×10^6 SCFD) fluidized bed coke oven gas treatment plant (plant operation started in April 1956). Two other gas-works plants (at Hottingham and Exetar) were also built. As of 1969, none of these plants were in operation. The fluidized-bed high temperature process is commerically offered by Woodall-Duckham but no U.S. plant has been constructed. The Morgantown Energy Research Center (MERC/DOE) has been working on the development of a high temperature process for application to coal-derived synthesis gas since January 1974.

1.3 Licensors/Developers/Suppliers[3,5]

Woodall Duckham (USA) Ltd.
200 Manor Oak One
1910 Cockran Road
Pittsburgh, Pa. 15220

Connelly-GPM, Inc.
200 South Second St.
Elizabeth, New Jersey 07206

Portable Treaters Co.
Box 3669
Odessa, Texas 79760

1.4 Commercial Applications - Low-temperature fixed bed - natural-gas sweetening. Fluidized bed - foreign, coke-oven gas and town gas; 3 plants have operated prior to 1969.

2.0 Process Information

2.1 Flow Diagram[5] - See Figure B-23 (for fixed bed design)

2.2 Equipment

Fixed Bed: Two adsorber vessels per train; blowers.

Fluidized Bed: Adsorber vessel, regenerator, conveyor, seal leg, blowers, tar arrester, feed hopper, heat exchangers.

2.3 Feed Stream Requirements[4]

- Best suited for low inlet H_2S (160 to 1200 ppmv) and small volumes; for large treatment volumes and sulfur contents, another conventional desulfurization process should precede this process.
- Feed stream should be low in dust and tar content to prevent bed fouling. (Fluidized bed less sensitive to dust in the feed.)
- Pressure: No specific requirements.

2.4 Operating Parameters

2.4.1 Adsorption Step[4,7]

Fixed Bed: See Table B-31

- Temperature generally between 289°K - 316°K (60°F to 110°F) in natural gas applications.
- Pressure variable: (up to 7 MPa (1000 psig))
- Space velocity: 7 to 35 hr^{-1}

Fluidized bed[2]

- Temperature: 673°K (750°F) for one application to coke oven gas
- Pressure: No limitations (one coke oven application uses near atmospheric pressure)
- Space velocity: ?

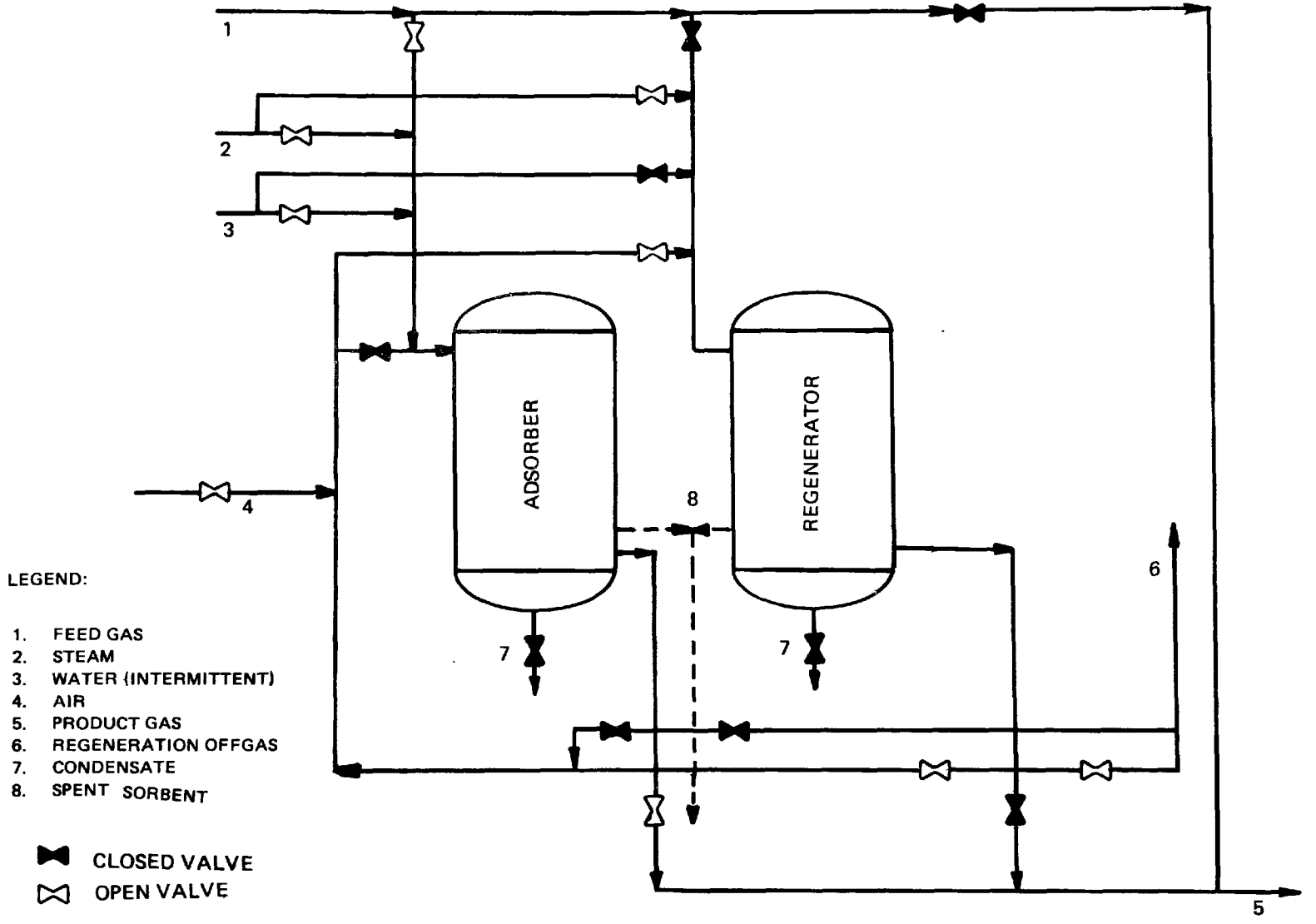

Figure B-23. Fixed Bed Iron Oxide Adsorption[5]

TABLE B-31. TYPICAL OPERATING CONDITIONS FOR IRON OXIDE GAS TREATMENT SYSTEMS[4]

Parameter	Type of System				
	Conventional Boxes	Deep Boxes	High Pressure	Tower Design	Continuous Process
Gas Volume, 10^6 Nm^3/day (10^6 SCFD)	0.35 (6)	0.25 (4.3)	0.89 (15)	1.4 (24)	0.12 (2.0)
H_2S Content of Feed, ppmv	16,000	11,800	200	8000 - 15,000	16,000
Pressure, psia (MPa)	Atmos.	Atmos.	23 (340)	Atmos.	--
Temperature, °K (°F)					
IN	289 (60)	296 (73)	--	302 (85)	--
OUT	294 (70)	307 (93)	--	311 (100)	--
Space Velocity, hr^{-1}	7.15	6.66	37.4	5.38	9.4

2.4.2 Regeneration Step

Fixed Bed - Batch Operation

- Switch valves and depressurize to 1 atm
- Circulate air through the bed; ambient temperature (below 220°K or 120°F)
- Monitor offgas for O_2 content

Fluidized Bed

- Continuous withdrawal of hot solids from adsorber and conveying at controlled rate to regenerator (roaster) vessel
- Temperature in the regenerator: ?
- Pressure: atmospheric

2.4.3 Sulfur Recovery

- In low temperature applications, sulfur accumulated in the bed as the result of regeneration may be recovered by steam, hot gas or solvent treatment. The spent iron oxide containing sulfur can also be discarded directly.
- In high temperature applications, the roasting of the bed during regeneration releases SO_2 which may be directly discharged to the atmosphere, converted to elemental sulfur or sulfuric acid.

2.5 Process Efficiency and Reliability[4,5]

2.5.1 Natural Gas Sweetening Application (low temperature, fixed bed)

- 0.3 to 4.0 ppmv H_2S in output (96% removal); depends on space velocity
- 20 ppmv (0.15 grain/100 scf) CH_3HS (89% removal)
- Effective HCN removal
- CO_2 and organic sulfur not removed
- Reliable and effective, small scale applications; control or moisture and surface "alkalinity" required for best efficiency (Na_2CO_3 solution and water or steam may be injected into the bed for control)

2.5.2 Coke Oven Gas Treatment (high temperature-fluidized bed)

No data available.

2.6 Raw Material Requirements[5]

- Unmixed oxide type (fixed bed): Prepared from iron ore, contains 75% ferric oxide, 10% water of hydration, 15% inert impurities; or prepared from red mud (bauxite purification residue), up to 50% ferric oxide; or natural bog ores, hydrated ferric oxide plus fibrous and peaty material, 45% H_2O.
- Mixed oxide type (fixed bed): Prepared from wood shavings or granulated slag used to support pulverized iron oxide; this material is commonly referred to as iron sponge.
- Make-up iron oxide: Quantity depends on specific application and mode of operation (fixed vs. fluidized bed and throwaway vs. bed regeneration).
- Na_2CO_3 conditioner solution: Quantity not known.
- Air for bed regeneration: ?
- Hot gas or solvent for sulfur recovery: ?

2.7 Utility Requirements

- Steam for sulfur recovery: ?
- Steam/water for bed conditioning: ?
- Electricity: ? (power for blower is small)

2.8 Miscellaneous - Operational Safety-Low Temperature Fixed Bed - Eventual bed replacement of fixed beds is required in the iron sponge process. Vessels must be designed to minimize diffficulties in replacement. Change-out of the beds is hazardous. Exposure to air when dumping a bed can lead to an exotherm (finely divided oxidizable materials). Spontaneous combustion can result. Care must be used in opening the tower and admitting air. The entire bed should be wetted before beginning the change-out operation.

3.0 Process Advantages

- Low temperature fixed bed iron sponge system is a well known widely applied technology.
- Regenerable low cost sorbent.

- Good removal efficiency (competitive with wet purification processes) in low space velocity, small volume, low H_2S content applications.

- Byproduct sulfur can be produced (may be uneconomic on small scale).

- HCN can be removed.

- Low temperature absorption/regeneration has relatively low utility requirements.

4.0 Process Limitations

- Space requirements: Relatively large for fixed beds (due to low space velocity); economic disadvantage compared to continuous wet processes.

- Requirement for the disposal of spent bed and the hazards of handling spent iron oxide (Section 2.8). For trace sulfur removal not as effective as ZnO guard.

- Best suited for sweetening small volumes of gas with low H_2S contents (low temperature batch process).

- CO_2 not removed.

- Cold weather gas-hydrate formation (iron sponge process).

- Process effectiveness has not been demonstrated for very high temperature applications (such as for low Btu fuel gas cleanup).

- Process efficiency is affected by the moisture content of the feed gas (unlike ZnO guard).

- In cold weather, moisture can condense on bed, and in some cases, reduce H_2S removal efficiency.

5.0 Process Economics

Duckworth and Geddes in 1965 reported comparative costs of iron sponge and MEA treatment for natural gas sweetening applications as follows[6]:

Inlet H_2S; 112 ppmv (7 grains/100 cu ft)

Inlet mercaptan: 20 ppmv (1.3 grains/100 cu ft)

MEA process capital investment - $270,000

Iron sponge capital investment - $110,000

MEA process direct operating expense - $28,000 (no depreciation)

Iron sponge direct operating expense - $23,000 (no depreciation)

6.0 Input Streams

6.1 Feed Gas - See Table B-31 for some typical applications.

6.2 Air - ?

6.3 Steam - ?

6.4 Make-up Iron Oxide - Quantity varies with application.

6.5 Na_2CO_3 Conditioning Solution - ?

7.0 Process/Discharge Streams

7.1 Gaseous

- Product Gas: Natural gas 0.3 to 4.0 ppm H_2S, 2 ppmv or less CH_3HS[5].
- Product Gas: Coke oven gas from fluidized bed hot process, down to 270 ppmv and 300 ppmv total sulfur[2].
- Offgas from hot fixed bed regeneration: Contains SO_2.

7.2 Solid

- Spent bed containing iron oxide, sulfur, and inert carriers from fixed bed process. Rate of production not known.
- Fines from attrition of iron ore, fluidized process, 1 kg/300 Nm^3 (1 lb per 5000 scf of gas processed)[2].

7.3 Liquid

- Generally no liquid stream, except when a solvent (such as ammonium sulfide or carbon disulfide) is used for sulfur recovery.

8.0 Data Gaps and Limitations

- Limited data on input and discharge streams characteristics for high temperature applications.
- No data on quantities and characteristics of spent adsorbent.
- Applicability of process to gases containing a relatively high concentration of hydrogen is not known.

9.0 Related Programs

Morgantown Energy Research Center (MERC/DOE) has an on-going program for the testing of the iron oxide adsorbent process for application to hot low Btu gas desulfurization. The work to date has been with the development of adsorbent support and bench-scale testing with coal-derived gas.

REFERENCES

1. Morgantown Energy Research Center, Quarterly Report, April-June 1977, p. 12.

2. Reeve, L., Desulphurization of Coke Oven Gas at Appleby-Frodingham, J. Inst. Fuel, July 1958, p. 319-324.

3. Grant, A. J., Applications of the Woodall Duckham 2-Stage Coal Gasification presented to 3rd International Conference on Coal Conversion. What Needs to be Done Now, Pittsburgh, PA, August 3, 1976.

4. Kohl, A. and Riesenfeld, F., Gas Purification, Gulf Publishing Co., Houston, Texas, 1974.

5. Dravo Corp., Handbook of Gasifiers and Gas Treatment Systems, Report FE-1772-11, February 1976, pp. 154-56.

6. Duckworth, G. C. and Geddes, J. H., Oil and Gas Journal 63, September 13, 1965, p. 94.

7. Maddox, R. N., Gas and Liquid Sweetening, Campbell & Co., 1974, p. 182.

METAL OXIDE IMPREGNATED CARBON PROCESS

1.0 General Information

1.1 Operating Principles[1,2] - Adsorption of trace quantities of sulfur species (mainly H_2S) from a gas using activated carbon impregnated with metal oxides* (e.g., copper, zinc, chromium). During subsequent regeneration with steam or air, the metallic sulfide is restored to its original oxide form and elemental sulfur is produced.

$$M + H_2S \rightarrow MS + H_2O \qquad \text{adsorption}$$

$$MS + 1/2\ O_2 \rightarrow MO + S \qquad \text{regeneration}$$

Periodic removal of sulfur from bed is accomplished using steam or hot inert gas, or using solvents (e.g., carbon disulfide or ammonium sulfide).

1.2 Development Status[1] - Commercially available; used for industrial gas desulfurization. Sixty plants in the U.S. Original industrial development by I.G. Farben Industries in 1920-1929, based on chemical warfare applications in 1915-1918.

1.3 Suppliers - Several companies, including:

Calgon Corp., Box 1346, Pittsburgh, PA 15230
Girdler Chemical Inc., Box 337, Louisville, KY 40201
Barnebey-Cheney Inc., Box 2526, Columbus, OH 43216

*Plain (nonimpregnated) activated carbon has been used for H_2S removal. In this application air is added to the feed gas and the carbon catalyzes the oxidation of H_2S to elemental sulfur which becomes trapped on the carbon surface. Tests have indicated that carbon has removed greater than 20% of its weight of H_2S. The deposited sulfur can be removed by solvents or heat transfer.

1.4 Commercial Applications - Natural gas sweetening and synthesis gas desulfurization.

2.0 Process Information

2.1 Flow Diagram (see Figure B-24) - The two-tower arrangement shown in Figure B-24 allows for operation of one tower in the adsorption mode while the adsorbent in the second tower is being regenerated. (See Section 1.1 for process description).

2.2 Equipment - Adsorbers, air blower, coolers, steam supply.

2.3 Feed Stream Requirements

- Any pressure
- Temperature: ? Volatilization of elemental sulfur (produced during regeneration) may determine upper temperature limitation.
- Best applicability to gas with $\leq$30 ppm H_2S.
- Low content of higher hydrocarbons, ammonia, and tar required.

2.4 Operating Parameters

2.4.1 Adsorption Step

- Any pressure
- Temperature: ?
- Inlet H_2S 30 ppm or lower
- Downward vertical gas flow
- Space velocity: 350 to 400 hr^{-1}

2.4.2 Regeneration Step[2]

- At or near 1 atm.
- Steam at 447°K to 533°K (400°F to 500°F). Bed preheat to 450°K (350°F) followed by 4 - 6 hours steaming.
- Air addition to oxidize sulfides.
- Upward vertical steam/air flow (opposite to previous flow of feed gas).

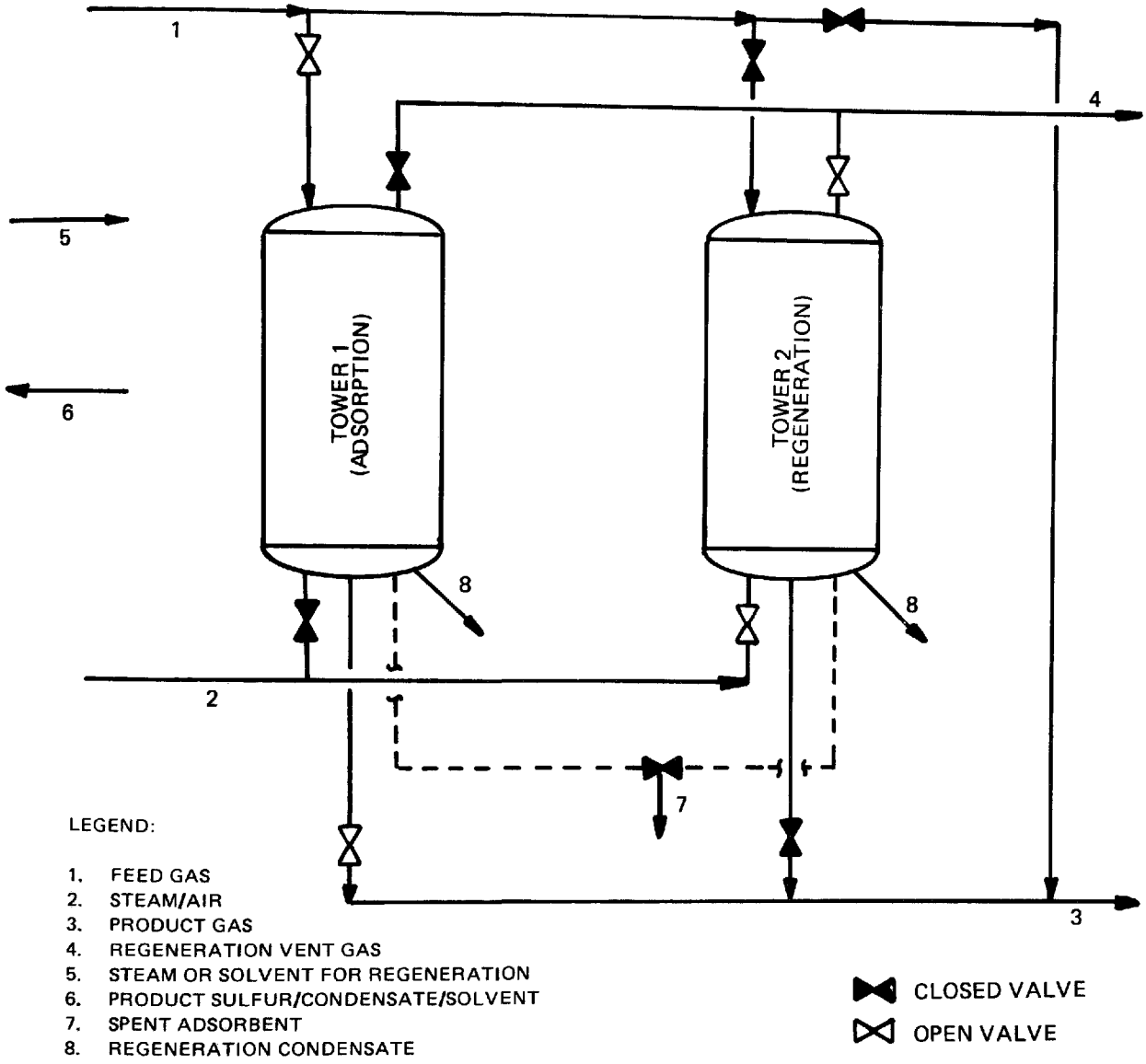

Figure B-24. Metal Oxide Impregnated Carbon Adsorption[1]

2.4.3 Sulfur Removal[2]

- Sulfur removal from bed necessary when sulfur build-up reaches 13 to 25 weight %.
- Sulfur removal methods include purging with steam or hot gas (570°K) or extraction with carbon disulfide or aqueous $(NH_4)_2S$.
- Sulfur impregnated carbon may also be directly discarded without sulfur recovery.

2.5 Process Efficiency[1] - Typically 99 percent or better removal before breakthrough; natural gas of 30 ppm H_2S can be purified to 0.2 ppm or less.

2.6 Raw Material and Utility Requirements

- Metal oxide impregnated activated carbon: quantity required depends on sulfur concentration in feed gas and nature of metal oxide/carbon used.
- Steam for regeneration: 2.8 to 5.9 kg/m^3 (50 to 100 lbs per cubic foot) of carbon.
- Electric power for blowers: ? (relatively small)
- Cooling water: ? (relatively small)
- Air for regeneration: ?

3.0 Process Advantages

- High removal efficiency.
- Recovery of pure sulfur by-product is possible.
- Can be designed to operate at any convenient feed stream pressure.

4.0 Process Limitations

- Treatment/disposal of H_2S-laden regenerant stream.
- Applicable only to low H_2S content feed streams; otherwise too frequent regeneration is required.
- Reagent deactivated by contaminants (e.g., ammonia, tars and polymers).
- Disposal of the vent gas (depressurizing preceding regeneration) stream and product sulfur is required.

- Auxiliary facility/equipment for sulfur/solvent recovery necessary.
- Regeneration steam may contain mercaptans, COS and other sulfur compounds. Treatment of this stream may be necessary before venting.

5.0 Process Economics

As with most adsorption processes the cost of activated carbon process is a function of the volume of gas treated, the temperature, and the chemical composition. No data available on the cost of this process for acid gas treatment.

6.0 Input Streams

6.1 Feed Gas (Stream 1) - No operating data available.

6.2 Steam/Air (Stream 2) - See Section 2.6.

7.0 Process/Discharge Streams

7.1 Product Gas (Stream 3) - No actual data available; total sulfur level of less than 0.2 ppm can be obtained.

7.2 Regeneration Vent Gas (Stream 4) - No data available.

7.3 Sulfur/Condensate (Stream 6) - No data available.

7.4 Regeneration Condensate or Solvent (Stream 8) - No data available.

(Condensate formed in bed during steam regeneration operation. Condensate may contain organics.)

7.5 Spent Adsorbent (Stream 7) - No data available.

8.0 Data Gaps and Limitations

Actual operating data for process (specifically on characteristics of discharge streams not known) not available.

9.0 Related Programs

No serious proposal to actually use carbon in SNG manufacture was found. Other desulfurization processes appear to be preferable. Data presented reflect experience in other industries, possibly not relevant to the SNG situation.

REFERENCES

1. Dravo Corporation, Handbook of Gasifiers and Gas Treatment Systems, ERDA Report FE 1772-11, February 1976, pp. 151-153.

2. Lovett, W. D. and Cunniff, F. T., Air Pollution Control by Activated Carbon, Chemical Engineering Progress, Vol. 70, No. 5, May 1974.

ORGANICS REMOVAL FROM GASES USING ACTIVATED CARBON

1.0 General Information

1.1 Operating Principles - Removal of hydrocarbons and other organics (particularly the odor-producing compounds) by adsorption on a solid bed of activated carbon ("adsorbent"). The molecules of impurities ("adsorbate") adhere to (adsorb on) the surface of the adsorbent by cohesion and/or chemical reaction. The extent and nature of adsorption depend on the properties of the particular carbon, adsorbate and the medium from which adsorption takes place. In practice, adsorption systems are designed to provide adequate contact between adsorbate and adsorbent and under conditions (e.g., temperature) most favorable for adsorption. The spent carbon is generally regenerated by physical (e.g., application of heat) and/or chemical treatment, with the adsorbed material often recovered in the form of a concentrated stream. In practice, adsorption systems are generally used for the removal of residual pollutants in a gas stream after bulk of such pollutants are removed by more conventional types of gas treatment.

1.2 Development Status - Commercially available.

1.3 Licensor/Developer - Many companies offer carbon adsorption systems for gas treatment. Some systems incorporate certain proprietary features. A complete listing of manufacturers are presented in technical and trade journals (e.g., Reference 1).

1.4 Commercial Applications[2,3] - The removal of organics from a gas stream to eliminate odor, control air pollution, or recover valuable products (e.g., benzene). Potential applications of adsorption systems in a coal gasification plant may be in connection with the control of emissions from lockhoppers, Claus plant and regeneration or process catalysts.

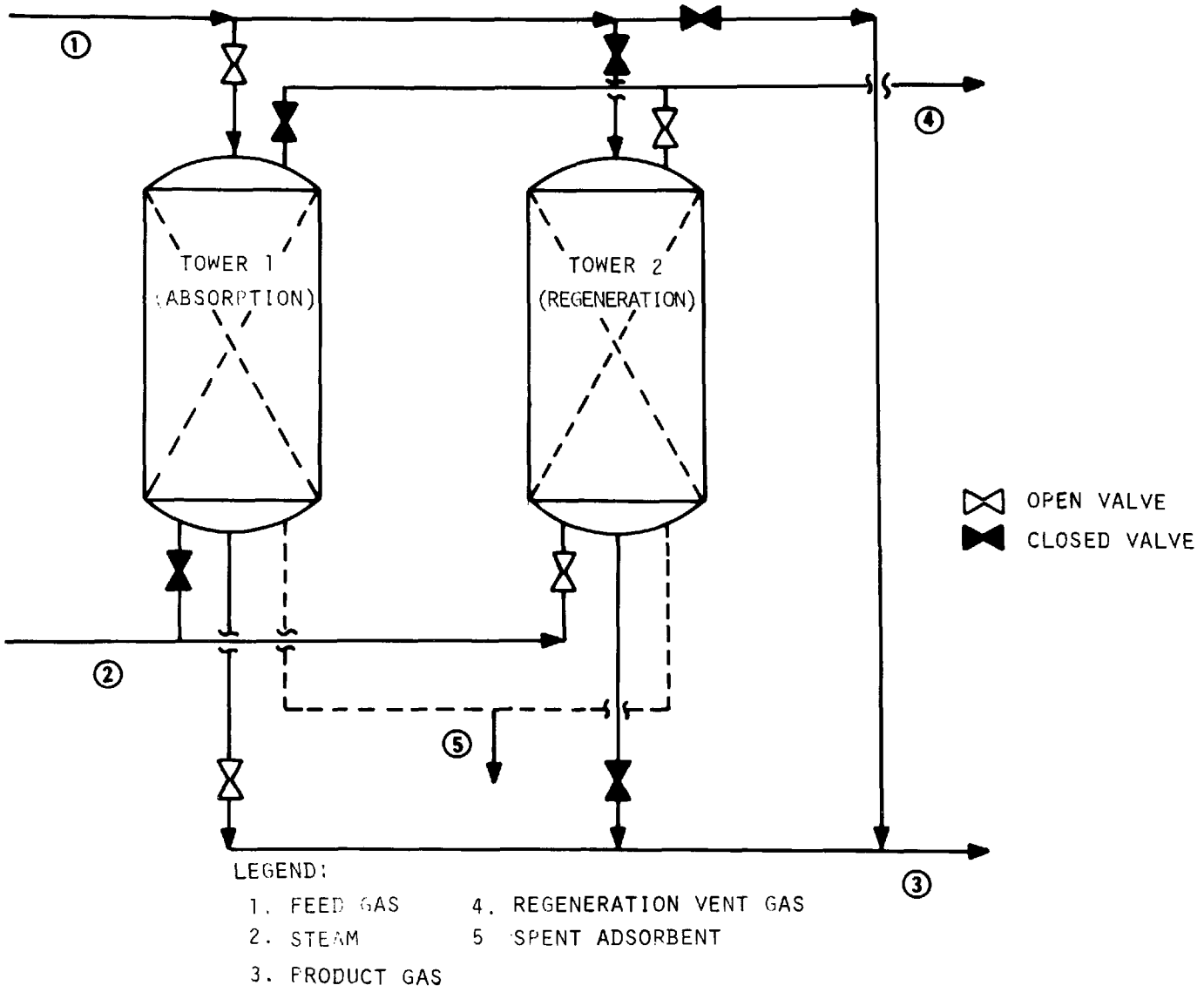

Figure B-25. Activated Carbon Adsorption

2.0 Process Information

2.1 Flow Diagram (see Figure B-25) - The two-tower arrangement shown in Figure B-25 allows for operation of one tower in the adsorption mode while the adsorbent in the second tower is being regenerated. (See Section 1.1 for process description.)

2.2 Equipment - Conventional adsorption vessel, adsorbent, and heating system for adsorbent regeneration.

2.3 Feed Stream Requirements

Temperature: Varies with the specific application and the carbon used.

Pressure: Varies with the specific design. Generally higher pressures favor adsorption.

Gas Composition: Dependent upon the adsorbent used; however, high concentrations of the contaminants improve adsorption efficiency.

2.4 Operating Parameters

2.4.1 Adsorption Step

- Temperature: Generally <366°K (<200°F) for most applications(2)
- Pressure: 0.1 to 0.6 MPa (atmospheric to 90 psig)(5).
- Loading (space velocity/contact time): Depends on the type of carbon used and the specific design; in one foundry application, a space velocity of 150 min^{-1} was used(4).

2.4.2 Regeneration Step

- Temperature: Generally in the 366°K to 811°K (200°F to 1000°F) range; low molecular weight adsorbed organics are generally driven off at lower temperatures, whereas high temperature regeneration is primarily aimed at in situ destruction (cracking) of higher molecular weight organics. Vacuum can also be applied to the system to reduce the necessary regeneration temperature.

2.5 Process Efficiency and Reliability - Depending on the type of carbon, carbon loading and the material to be adsorbed, removal efficiencies of up to 99% can be attained. In general, the adsorption efficiency is higher for larger molecular weight and unsaturated and aromatic compounds. Carbon adsorption has been in use for a number of years and has proven successful in removing a wide variety of organic contaminants from gas streams.

2.6 Raw Material Requirements

- Carbon makeup/replacement: Depends upon the material adsorbed (adsorbate), regeneration method and conditions, operating temperature, pre-filtration and treatment of gas stream.

- For an activated carbon system used to recover an organic solvent, typical carbon makeup requirements are reported as follows: 0.2 to 0.4 kg of carbon per tonne of solvent recovered (0.5 to 1.0 lb/ton)[2].

2.7 Utility Requirements

- Vary with the nature of application; typical values for a carbon adsorption system recovering an organic solvent are as follows[2]:

  - Electricity: 4.5 to 6.75 kwh/100 kg of solvent recovered (0.10 to 0.15 kwh/lb recovered)

  - Cooling water: 60 to 85 l/kg recovered (70 to 10 gal/lb recovered)

  - Steam: 1 kg/kg of solvent recovered (1 lb/lb)

3.0 Process Advantages

- Activated carbon is highly efficient in the removal of trace quantities of organics, particularly for some of the most objectionable odiferous compounds.

- Purified gas from an adsorption unit is generally suited for discharge directly to atmosphere.

- A product stream suitable for by-product recovery or use as fuel can be produced.

4.0 Process Limitations

- Adsorbent requires regeneration, normally by heat.

- Some adsorption capacity is lost during each regeneration cycle.

- For most applications involving use of activated carbon, the inlet gas temperature must be kept below 366°K (200°F).

- Rapid pressure changes can physically disturb the catalyst bed and the flow regime through the bed, with the resultant reduction in adsorption efficiency.

- Particulate matter can clog the sorbent surface, resulting in increased pressure drop and deterioration of carbon activity.

- In some applications, pretreatment of the gas stream may be necessary to extend the bed life and reduce regeneration requirements.

- Carbons used for gas treatment are generally more expensive than those used in water pollution control.

- Depending on the nature of the gas stream handled, spent carbon regeneration and ultimate disposal may present special hazards due to the hazardous nature of the adsorbed organics.

5.0 Process Economics

- Cost of system varies as a function of gas flow rate and composition, regeneration method and removal efficiency.

6.0 Input Streams

- Gas composition is dependent upon the source of the waste gas.

- Make-up carbon: Carbon for gas treatment applications are generally manufactured from coconut shells, fruit pits and couhene and babassu nut shells; the make-up quantity depends on nature, effectiveness and frequency of regeneration.

7.0 Discharge Streams

- Purified gas stream (Stream 2): Composition depends on application.

- Regeneration off-gas (Stream 3): Can contain a high concentration of the contaminants which were adsorbed.

- Spent carbon: Depending on the material adsorbed or the nature of regeneration, may contain potentially hazardous organics and trace elements. The quantity and characteristics of spent carbon vary with the application. Spent carbon may be incinerated (or gasified in a gasification plant) to recover fuel value, or discarded as solid waste.

8.0 Data Gaps and Limitations

Extensive performance data are available for the various types of adsorption systems and media as applied to a variety of industrial gas cleaning operations. Evaluation of expected performance of adsorption systems in application to coal gasification plant waste gas streams requires data on detailed characterization of the gas to be treated. Such data include gas temperature, chemical characteristics including a trace element survey, and are generally either unavailable or are incomplete.

9.0 Related Programs[6]

A carbon adsorption system is featured at the Synthane pilot plant at Bruceton, Pennsylvania, for the removal of heavy organics from product gas after acid gas treatment in a Benfield unit (Benfield process does not remove organics). When operational, the Synthane integrated operation should provide useful information about carbon performance in gasification service.

REFERENCES

1. Environmental Control Issue, Control Equipment, Environmental Science and Technology, October 1977.

2. Riesenfeld, F. C. and Kohl, A. L., Gas Purification, 2nd Edition, Gulf Publishing Company, 1974.

3. LeDuc, M. F., Adsorption Equipment, Air Pollution Engineering Manual, 2nd Edition (AP-40), U.S.E.P.A., May 1973.

4. Lovett, W. D. and Cunniff, F. T., Air Pollution Control by Activated Carbon, Chemical Engineering Progress, Vol. 70, No. 5, May 1974, p. 43.

5. Anon, A History of FGD Systems Since 1850, Journal of the Air Pollution Control Association, Vol. 27, No. 10, October 1977.

6. Haynes, W. P., et. al., Synthane Process Update, Mid-1977, 4th International Conference on Coal Gasification, Liquefaction and Conversion, Pittsburgh, Pennsylvania, August 2 - 4, 1977.

MOLECULAR SIEVES PROCESS

1.0 General Information

1.1 Operating Principles - Physical adsorption of polar and small molecules (H_2O, H_2S, mercaptans) from a gas on a fixed bed of porous synthetic Na/K/Ca aluminosilicate (zeolite) granules. H_2O is more strongly adsorbed than any other component. Molecular sieves consist of a geometric network of cavities connected by pores. Pores are of molecular dimensions, 0.25 to 12.7 Å (1×10^{-9} to 5×10^{-8} inch). Regeneration is performed using a hot gas.

1.2 Development Status[1,2] - Natural zeolites have been used in gas dehydration since the 18th century; synthetic zeolites (cracking catalysts) have been used since 1940. Linde molecular sieves have been commercially offered since 1954. Extensively used worldwide for dehydration, H_2S removal, etc. (over 150 units for desulfurization).

1.3 Commercial Applications

- Mercaptan removal from natural gas
- Cryogenic C_2H_6 and helium extraction from natural gas
- Air separation plants (recovery of argon)
- LNG production
- Annealing-oven inert gas purification
- Ethylene purification

2.0 Process Information

2.1 Flow Diagram (see Figure B-26) - The two unit arrangement shown in Figure B-26 allows for operation of one unit in the adsorption mode while the molecular sieves in the second unit are regenerated (see Section 1.1 for process description).

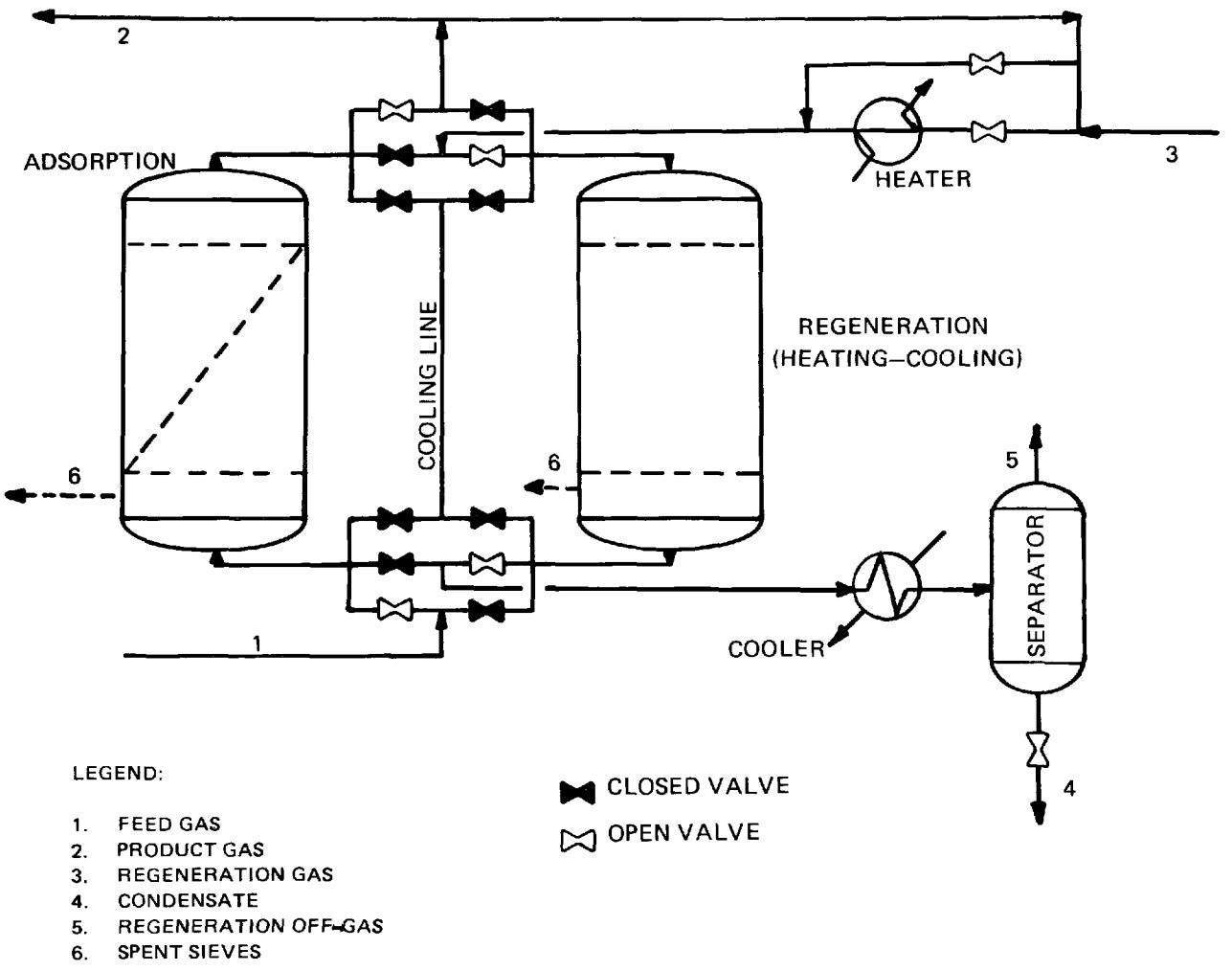

Figure B-26. Molecular Sieve Process for Sulfur Removal from Fuel Gases[1]

2.2 Equipment - Adsorbers, heater, cooler, knockout drum, sulfur recovery train. Number of beds in system depends on inlet H_2S concentration.

2.3 Feed Stream Requirements[5]

- Any pressure or CO_2 content (CO_2-to-H_2S mole ratio of up to 1050 can be tolerated).
- Temperature: 289°K to 322°K (60°F to 120°F).
- Best applicability to dried gases, since large beds would be required for H_2S removal from wet gases.
- Total sulfur content up to 10,000 ppm.
- Feed should be very low in organics (e.g., glycol carryover from a prior dehydration step).

2.4 Operating Parameters[4,6,8]

2.4.1 Adsorption Step

- Any pressure
- Temperature: 289°K to 322°K (60°F to 120°F) (each 5.6°C [10°F] increase reduces bed capacity by 20 percent) - see Table B-32.
- Bed density: typically 673 kg/m^3 (42 lb/cu ft).
- Space velocity: ?

2.4.2 Regeneration Step

- Uses a hot gas (commonly the product gas): gas temperature 561°K to 489°K (550°F to 600°F).
- Can run at adsorption pressure but works best at low pressure (0.1 MPa [1 atm].
- Flow in direction reverse to that of adsorption.

2.5 Process Efficiency[4,7]

- H_2S 4 ppm or less (down to 0.3 ppm) in product.
- CH_3SH removed more efficiently than H_2S; 95 percent CH_3SH removal is typical.

TABLE B-32. SIEVE PERFORMANCE ON H_2S IN BINARY SYSTEM (H_2S AND DILUENT)

Temperature	H_2S Partial Pressure	Amount Absorbed, kg H_2S/ kg Sieve
298°K (77°F)	(1 mm Hg) 0.13 KPa	4.4*
	(10) 13.2 KPa	10.6
	(100) 132 KPa	15.7
348°K (167°F)	(1) 0.13 KPa	2.4
	(10) 13.2 KPa	5.6
	(100) 132 KPa	10.6
423°K (302°F)	(1) 0.13 KPa	0.4
	(10) 13/2 KPa	2.2
	(100) 132 KPa	5.2
		*At incipient breakthrough (UCC type 5A pellets)
298°K (77°F)	(1) 0.13 KPa	5.0
	(200) 264 KPa	17.0
		(UCC type 13X pellets)

UCC = Union Carbide Corp.

- Not outstanding on CO_2 (non-polar); but CO_2 applications in natural gas are common.
- C_2H_5SH not removed effectively due to pore size limitation.
- H_2S removal efficiency depends on inlet feed stream H_2O and H_2S levels.

2.6 Raw Material and Utility Requirements

- Heat for regeneration: ?
- Cooling water: ?

- Bed change typically once in 3 to 5 years (depends on the specific applications).

3.0 Process Advantages

- Relatively low operating cost.
- Selectivity of H_2S and CH_3SH over CO_2.
- Relatively safe and maintenance free.
- Long sorbent life.
- Typically smaller size units than carbon beds.
- Works well over a wide range of pressure, H_2S or CO_2 level.
- Specific pore sizes marketed to suit specific applications.

4.0 Process Limitations

- Narrow operating temperature range (optimum temperature 289°K to 322°K (60°F to 120°F).
- Sieves are expensive.
- Strong affinity for H_2O may make sieves uneconomical for sulfur removal when the gas stream contains large amounts of water.
- The contaminanted regenerant gas may require treatment prior to disposal.
- When CO_2 is present, sieves can act as catalyst for COS formation ($CO_2 + H_2S \rightarrow COS + H_2O$). The COS is only weakly adsorbed and quickly appears in the product. The equilibrium which is normally unfavorable to COS is upset by the strong retention of product H_2O by sieves.
- Disposal of vent gas, and complex valving, when regeneration pressure not equal to adsorption pressure. (Pressure swing type operation.)
- Presence of large quantities of CO_2 has a detrimental effect on the sweetening process.
- Complete removal of water (production of bone dry gas) may not be desirable in certain applications.

5.0 Process Economics

- In applications to natural gas, sweetening heater and flared regeneration gas (combined) typically consume 1 to 2 percent of daily throughput.

- In a one-sieve application to natural gas, a capital cost of $1 million was reported for a 2.5 x 10^6 Nm^3/D (100 x 10^6 scfd) plant. The natural gas treated contained 6% CO_2 and 3.5 to 4.7 g/100 Nm^3 (15 - 20 grains/100 scf) sulfur. Approximately 54 tonnes (60 tons) of sieves were used[6]. This cost compares to $1.5 million for an equivalent amine treating plant[6].

6.0 Input Streams

No data available for applications to H_2S removal from gases; the characteristic of the input gas (Stream 1) to a 5.1 x 10^6 Nm^3/D (2 x 10^8 scfd) natural gas mercaptan removal plant are as follows[9]:

- Feed pressure: 5.2 MPa (750 psig)
- Feed total sulfur concentration: 470 mg/100 Nm^3 (2 grains/100 scf) (32 ppm H_2S equivalent)
- H_2O, 1.2 kg/100 Nm^3 (7 lb/1000 scf) or less
- Trace of glycol, glycol degradation products and oil
- Zero H_2S and CO_2
- Butane, 300 ppm volume
- Balance is CH_4, N_2, ethane, propane

7.0 Process/Discharge Streams

7.1 Product Gas (Stream 2): No data available for applications to H_2S removal from gases (for the mercaptan removal system described in Section 6.0, 97% total sulfur removal has been reported).

7.2 Purge Gas/Condensate (Streams 4 and 5): ?

7.3 Spent Sieves (Stream 6): ?

8.0 Data Gaps and Limitations

Very limited data available for molecular sieves application to H_2S removal, specifically on the characteristics of discharge streams.

9.0 Related Programs

Sieves have not been seriously proposed for use in SNG plants. In one instance, sieves were proposed for treatment of CO_2 vent gas from Benfield CO_2 removal in a Bi-Gas plant[3]. The alternative Rectisol process was deemed preferable to the Benfield and sieve system.

REFERENCES

1. Dravo Corporation, Report FE-1772-11, Handbook of Gasifiers and Gas Treatment Systems, pp. 157-59, February 1976.

2. Kohl and Riesenfeld. Gas Purification, 2nd Edition, Gulf Publishing, 1974, pp. 563-575.

3. Jahnig, C. E., Evaluation of Pollution Control in Fossil Fuel Conversion Processes. Gasification: Section 5, Bi-Gas Process, EPA Report 650/2-75-009g, NTIS No. PB 293-694, p. 11.

4. Chi, C. W. and Lee, H., Natural Gas Purification by 5A Molecular Sieves and its Design Method, AIChE Symposium Series No. 134, Vol. 69, pp. 95-101, 1973.

5. Maddox, R. W., Gas and Liquid Sweetening, Campbell and Company, pp. 188-200, 1974.

6. Thomas, T. L. and Clark, E. L., Proceedings of the 46th Annual NGPA Meeting, no date.

7. Harris, T. B., Natural Gas Treating with Molecular Sieves, Pipeline and Gas Journal, June-August 1972.

8. Lee, N. N. Y. and Collins, J. J., Ammonia Plant Feed Desulfurization with Molecular Sieves, Presentation to Tripartite AIChE Meeting, Montreal, Canada, September 25, 1968.

9. Conviser, S. A., Oil and Gas Journal 63, pp. 130-135, December 6, 1965.

APPENDIX C

GAS UPGRADING OPERATION

Shift Conversion Module

Cobalt Molybdate Process

Methanation and Drying Module

Fixed-Bed Methanation

Fluidized-Bed Methanation

Liquid Phase Methanation/Shift

COBALT MOLYBDATE PROCESS

1.0 General Information

1.1 Operating Principles - The water-gas shift reaction is the conversion of steam and carbon monoxide to make hydrogen and carbon dioxide ($CO + H_2O = H_2 + CO_2$). It is a reversible reaction, easily promoted by a variety of catalysts. Since it is mildly exothermic, the equilibrium tends toward more hydrogen at lower temperatures. The equilibrium is independent of pressure.

1.2 Development Status - Shift conversion for hydrogen production has been practiced on large scale commercially since about 1930. The classical high-temperature catalyst, still the most popular, is iron oxide. In sour gas service iron catalysts suffer some severe handicaps. Therefore, in 1970 Badische Anilin and Soda Fabrik announced a cobalt molybdate catalyst specifically designed for shift conversion of gases contaminated by large percentages of hydrogen sulfide. Since then several other catalyst manufacturers have offered cobalt molybdate catalysts for sour gas shift.*

Combined shift and methanation processes are also under development, using nickel based catalysts (see data sheets for fixed- and fluidized-bed methanation).

1.3 Licensor/Developer - The fact that the sulfide derivative of cobalt molybdate is an efficient shift conversion catalyst has been known for so long that it is improbable that any dominant patent now exists. Catalyst manufacturers have performed the development

---

*Although catalysts other than Co-Mo based may be used in shift conversion, the appropriate temperature range applicability and resistance to sulfur poisoning make Co-Mo catalysts most attractive for SNG production. This data sheet will thus be restricted to such catalysts.

work and are, in general, reluctant to reveal details of operation except under secrecy agreement with a bonafide catalyst purchaser.

A partial list of catalyst manufacturers who offer cobalt-moly sulfide catalysts for sour gas shift purposes is as follows:

BASF Wyandotte, Parsippany, New Jersey
Catalysts and Chemicals Inc., Louisville, Kentucky
Haldor Topsoe, Houston, Texas
Katalco Corp., Oak Brook, Illinois

1.4 Commercial Applications - At least two sour gas shift units (Co-Mo type) are operating today on commercial scale, but the identity of one of them is confidential. The coal gasification demonstration at Westfield, Scotland, between May and September 1974, used a sour gas shift process provided by Lurgi(1). The catalyst of that demonstration was cobalt-moly(2).

2.0 Process Information

2.1 Flow Diagram - See Figure C-1.

2.2 Equipment - The basic equipment consists of an adiabatic fixed-bed high temperature reactor, feed stream heaters, product stream coolers, and a condensate separation vessel. Some of the heat exchangers are recuperative. The reaction vessel for a one-third demonstration size plant (2.27×10^6 m^3 per day) was a horizontal cylinder with hemispherical heads, 3.20 meters i.d. by 14.63 meters t.t. It contained two beds of catalyst; the smaller fore-bed could be by-passed when clogged(3).

2.3 Feed Stream Requirements

Composition(4): The ratio of steam to dry gas must be at least 0.7. The sulfur content of the dry gas feed must be at least 10 ppm. There is no maximum limit to sulfur content. During startup the sulfur content of the feed gas should be far higher than the minimum for normal operation. H_2S may be deliberately injected during startup to convert the cobalt molybdate to the active sulfided form.

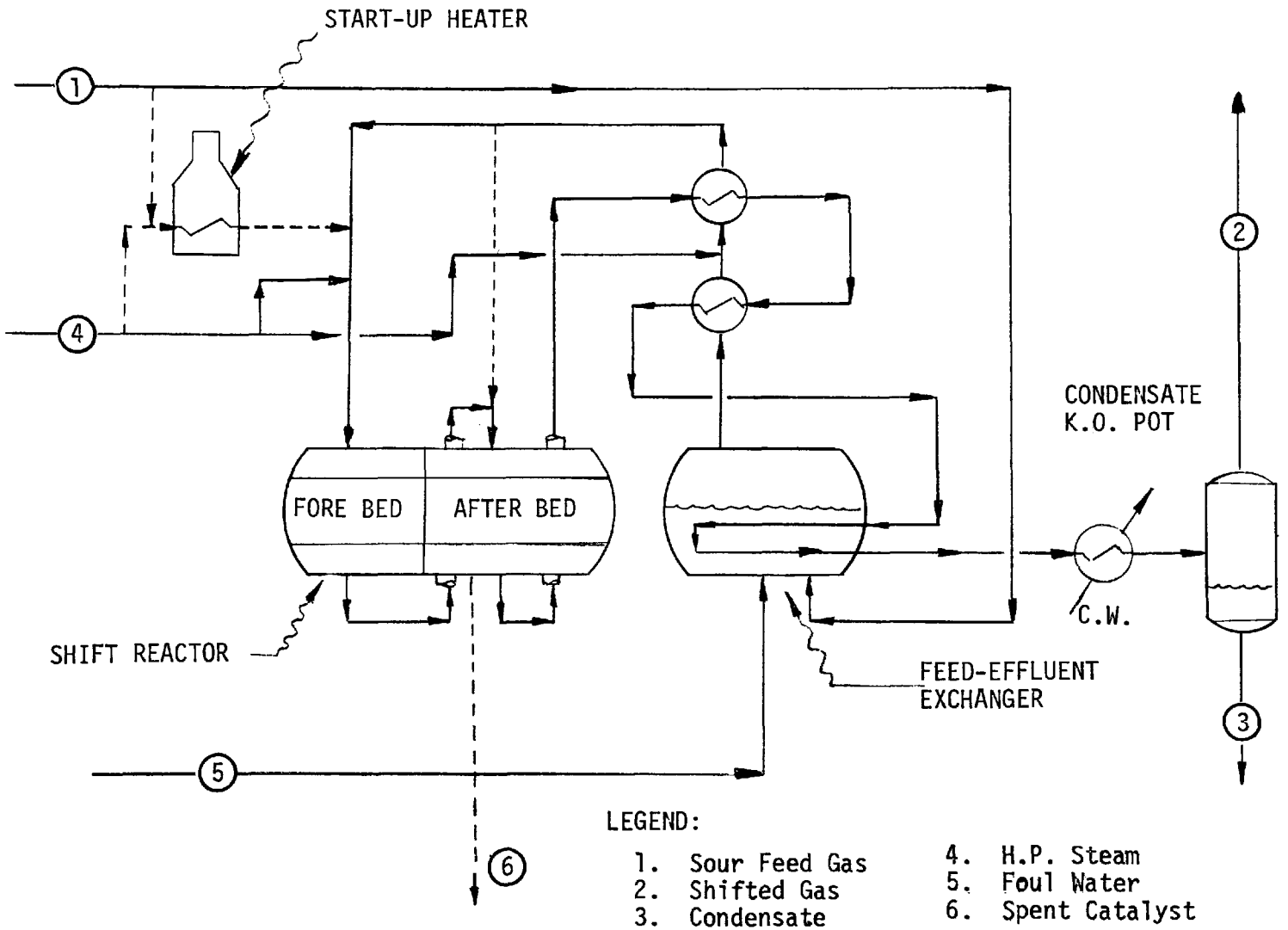

Figure C-1. Sour Gas Shift Conversion at the Hygas Demonstration Plant[3]

Temperature[4]: The feed gas to the reactor should be between 533°K (500°F) and 575°K (578°F) during normal operation with fresh catalyst of high activity.

Pressure: The pressure of shift conversion can be at any convenient level determined by other steps in the coal gasification process. However, at 533°K (500°F) the feed gas should not exceed 11.39 MPa (1790 psia) because the water dew point may be exceeded.

2.4 Operating Parameters[4]

Temperature: Normal operation is between 533°K (500°F) and 728°K (851°F). As catalysts age, the operator should gradually raise the temperature to compensate for loss of activity. Start-up is rather elaborate, to avoid the two hazards of carbonyl formation and runaway methanation. The catalyst vendor should dictate the startup program.

Pressure: The operating pressure can be set for the convenience of other steps in the coal gasification process.

Space Velocity: ?

2.5 Process Efficiency and Reliability - At least three commercial-scale coal gasification plants have successfully operated with cobalt-moly sour gas shift catalysts (see Section 1.2 above). The catalyst manufacturers who have independently developed this catalyst are all reliable companies with adequate experience in gas processing.

2.6 Raw Material Requirements - Catalyst cobalt molybdate (see Section 1.3). Useful life varies with catalyst, feed composition, and operating conditions.

2.7 Utilities - High-pressure steam is the only utility consumed in significant quantity by the shift reaction. The process designer can trade off capital investment versus steam consumption to achieve an optimum economic balance. Maximum heat conservation for the process shown in Figure C-1 has lead to a design steam

demand of 0.419 kilograms per standard cubic meter of raw gas fed to the shift converter[3].

3.0 Process Advantages

- The sour gas shift can salvage some of the enthalpy of the hot raw gas from the gasifier. The raw gas need only be partially quenched to a degree where tar and dust can be excluded.
- The sour gas shift uses less steam than the classical high-temperature shift.
- Part of the steam requirement of the sour gas shift can be furnished by sparging feed gas through a pool of foul water. This serves as a disposal outlet for the foul water generated elsewhere.
- Cost savings are realized when acid gas removal is located entirely downstream of the sour gas shift. If the conventional shift were used, the acid gas removal system would have to be split into two scrubbers. Absorption of the hydrogen sulfide would have to be upstream of the conventional shift; that portion of the carbon dioxide generated by shift conversion would have to be scrubbed out downstream.
- The cobalt-moly catalyst is active for destructive hydrogenation of carbonyl sulfide when relatively clean gas is processed.
- The sour gas shift catalyst can be regenerated easily. The conventional iron-oxide shift catalyst cannot be regenerated.

4.0 Process Limitations

- Reducing and sulfiding the catalyst is a delicate operation at initial startup. Subsequent cold startups are routine.
- Spent catalyst may present handling and disposal problems.

5.0 Process Economics

- The capital cost estimate for the shift conversion section of the HYGAS demonstration plant was $31,000,000[4]. The demonstration plant size was 7.08 million cubic meters per day. The whole demonstration plant, on the same basis, was estimated at $681,000,000. Therefore, the shift conversion unit represents about four and one-half percent of plant investment.
- Steam consumption depends on process design and degree of heat recuperation pursued.
- Catalyst service life is not yet predictable. There is inadequate industrial experience with this catalyst in coal gasification applications.

6.0 Input Streams (Figure C-1)

- Feed Gas (Stream 1) - See Tables C-1 and C-2*.
- High Pressure Steam (Stream 4) - No data available.
- Foul Water (Stream 5) - No data available.

7.0 Discharge Streams (Figure C-1)

- Shifted Gas (Stream 2) - See Tables C-1 and C-2*.
- Condensate (Stream 3) - No data available.
- Spent Catalyst (Stream 6) - See Sections 1.3 and 2.6.

8.0 Data Gaps and Limitations

The full details of sour gas shift conversion using proprietary cobalt molybdate catalysts are known only to the catalyst manufacturers and those catalyst purchasers who have signed secrecy agreements. No data are currently available regarding the composition of condensate generated by shift conversion units.

Although bench scale experiments with simulated gas mixtures indicate that shift catalyst may be active for the hydrolysis of COS and CS_2, reported experience with "dirty" coal gases has not shown that these sulfur compounds are converted to H_2S[7]. Data to support these findings for "dirty" gases are not currently publicly available.

9.0 Related Programs

The operation of the shift conversion units at the HYGAS pilot plant is expected to provide additional data on the performance of the process in SNG applications.

---

*Data found in Tables C-1 and C-2 are from bench pilot unit for short operating times and small gas volumes. The catalyst used was BASF K8-11[5]. These data are presented since they indicate catalyst activity for both the shift reaction and for hydrogenation of carbonyl sulfide and propylene.

TABLE C-1. BENCH SCALE SHIFT CONVERSION REACTOR FEED AND PRODUCT GAS COMPOSITION, 627°K[5]

Feed Gas Rate, g-mol/hr (lb-mol/hr)	5.2 (1.1470×10^{-2})	
Steam-to-Gas Ratio	0.78	
Gas Analysis:		
Feed Gas Composition, mol %	Dry	Wet
Carbon Monoxide	8.7	5.20
Carbon Dioxide	6.9	4.12
Hydrogen	31.2	18.63
Methane	49.1	29.32
Ethane	1.3	0.78
Propane	0.04	0.02
Ethylene	0.01	0.01
Propylene	0.18	0.11
Carbonyl Sulfide	0.15	0.09
Hydrogen Sulfide	1.00	0.60
Sulfur Dioxide	0.08	0.06
Nitrogen	1.3	0.78
Water	0.00	40.28
Total	99.96	99.99
Reactor Temperature, °K (°F)	627° (670°)	
Reactor Pressure, MPa (psig)	6.9 (1025)	
Steam Temperature, °K (°F)	656° (720°)	
Product Gas Rate, g-mol/hr (lb-mol/hr)	5.7 (1.26×10^{-2})	
Product Gas Composition, mol %	Dry	Wet
Carbon Monoxide	0.7	0.41
Carbon Dioxide	14.3	8.38
Hydrogen	37.3	21.86
Methane	43.5	25.49
Ethane	1.2	0.70
Propane	0.13	0.08
Ethylene	0.01	0.00
Propylene	0.04	0.02
Acetylene	0.01	0.00
Carbonyl Sulfide	0.00	0.00
Hydrogen Sulfide	1.00	0.59
Sulfur Dioxide	0.04	0.02
Nitrogen	1.80	1.05
Water	0.00	41.40
Total	100.03	100.00
Space Velocity, hr^{-1}	2174	3860
COS Converted, mg-mol/hr (lb-mol/hr)	7.7 (1.7×10^{-5})	
% COS Conversion	100	
Propylene Hydrogenated, mg-mol/hr (lb-mol/hr)	7.3 (1.6×10^{-5})	
% Conversion	75.6	

*Bench pilot unit operation with propylene added to feed gas to investigate hydrogenation of unsaturated hydrocarbons during shift reaction.

TABLE C-2. BENCH SCALE SHIFT CONVERSION REACTOR FEED AND PRODUCT GAS COMPOSITION, 438°K(6)*

Feed Gas Rate, g-mol/hr (lb-mol/hr)	4.7 (1.04×10^{-2})	
Steam-to-Gas Ratio	0.70	
Gas Analysis:		
Feed Gas Composition, mol %	Dry	Wet
Carbon Monoxide	21.4	12.6
Carbon Dioxide	17.8	10.5
Hydrogen	36.8	21.7
Methane	20.3	12.0
Ethane	0.37	0.22
Propylene	0.10	0.06
Butene	0.13	0.08
Hydrogen Sulfide	2.0	1.18
Carbonyl Sulfide	0.20	0.12
Nitrogen	0	0
Water	0	41.0
Total	100.00	100.00
Reactor Temperature, °K (°F)	438 (330)	
Reactor Pressure, MPa (psig)	1.36 (200)	
Steam Temperature, °K (°F)	473 (390)	
Product Gas Rate, g-mol/hr (lb-mol/hr)	4.54 (1.05×10^{-2})	
Product Gas Composition, mol %	Dry	Wet
Carbon Monoxide	20.0	11.0
Carbon Dioxide	17.3	9.5
Hydrogen	38.5	21.1
Methane	19.6	10.7
Ethane	0.35	0.19
Propylene	0.11	0.06
Butene	0.14	0.08
Hydrogen Sulfide	2.40	1.32
Carbonyl Sulfide	0.20	0.11
Nitrogen	0	0
Water	0	45.2
Space Velocity, hr^{-1}	--	2000
COS Converted, mg-mol/yr (lb-mol/hr)	0	
% COS Conversion	0	
% Propylene Conversion	0	

*30-minute operation of bench pilot unit

REFERENCES

1. Hebden, D., and Brooks, C. T., Westfield--The Development of Processes for the Production of SNG from Coal, Communication 988 at the 113th Annual General Meeting of the Institution of Gas Engineers, Edinburgh, 1976.

2. Sudbury, J. E., J. R. Bowden, et al, A Demonstration of the Slagging Gasifier Process, Proceedings of Eighth Syntehtic Pipeline Gas Symposium, A.G.A. et al., Chicago, Illinois, 1976, pp. 483-496.

3. Institute of Gas Technology, HYGAS: 1964 to 1972 Pipeline Gas From Coal-Hydrogenation (IGT Hydrogasification Process) Part VIII: Commercial Plant Design, ERDA Number FE-381-T9-P4, Chicago, Illinois, 1975.

4. Detman, R. Factored Estimates for Western Coal Commercial Concepts, ERDA Number FE-2240-5, C. F. Braun & Co., Alhambra, California, 1976.

5. Environmental Assessment of the HYGAS Process, Monthly Report (March 1 to March 31, 1977) prepared by Institute of Gas Technology, for ERDA, ERDA Number FE-2433-11.

6. Environmental Assessment of the HYGAS Process, Monthly Report (Sept. 1-30, 1977) prepared by Institute of Gas Technology, for ERDA, ERDA Number FE-2433-19.

7. Private communication with Don Fleming of the Institute of Gas Technology, May 31, 1978.

FIXED-BED METHANATION PROCESS

1.0 General Information

1.1 Operating Principle - Carbon oxides and hydrogen are reacted to produce methane and water over a fixed bed or surface of Raney nickel catalyst. The methanation reactions are:

$$CO + 3H_2 = CH_4 + H_2O$$

$$CO_2 + 4H_2 = CH_4 + 2H_2O$$

1.2 Development Status - The reaction itself has a long history of commercial utility. It is used, for example, in the purification of ammonia feed gas by extinction of residual carbon monoxide. As applied to high Btu gas production from coal, fixed-bed methanation generally requires a recycle of product methane to control heat generation and to dehydrate the reaction atmosphere. Several different arrangements of accomplishing this recycle have been tested. One version was demonstrated at Westfield, Scotland, on commercial scale between May and September, 1974[2,3]. Another version was demonstrated on pilot plant scale in Chicago between April 1973 and November 1976 as a part of IGT's HYGAS demonstration program[6,7,8,9,10,11]. No facilities currently produce high Btu gas via methanation on a commercial scale. Combined shift and methanation has also been tested at the pilot plant level[1,19].

1.3 Licensor/Developer - The technology of fixed-bed methanation is widely known and readily available from catalyst manufacturers, engineering design and construction contractors, and private consultants. No dominant patent exists.

1.4 Commercial Applications - Commercial applications have been for the purification of hydrogen for synthesis of ammonia and other chemicals, and as a final step in manufacture of synthetic natural gas.

2.0 Process Information

2.1 Flow Diagram - See Figure C-2 for a generalized fixed-bed methanation process. Depending on the feed gas composition and the method of extracting heat from the system, feed gas may either be fed to the first-stage methanator (1) undiluted, (2) diluted with recycle gas or (3) diluted with steam. A second-stage methanator is commonly employed for final methanation followed by cooling/heat recovery and condensation of moisture.

2.2 Equipment - The equipment consists of steel pressure vessels to hold the catalyst beds, heat exchangers, the recycle gas compressor, and a condensate flash drum. Equipment sizes are listed on Table C-3 for three alternate designs of the methanation step of the HYGAS process.

2.3 Feed Stream Requirements

Composition[13]: The ratio of hydrogen to carbon oxides should be slightly greater than stoichiometric* (e.g., 3 moles hydrogen per mole carbon monoxide and 4 moles hydrogen per mole carbon dioxide). Residual excess hydrogen at completion of the reaction should be in the range of 2% to 10%.

The feed stream to an adiabatic reactor may be no richer than about 4 percent carbon monoxide. This means the feed gas from a coal conversion process must be diluted by recycle of product gas and flows carefully controlled. Moisture can be tolerated in feed up to the saturation level at about 328°K.

The feed gas must be essentially free of sulfur in all forms. Catalysts differ in their tolerance for sulfur, but a reasonable specification might be 0.1 ppm measured as H_2S.

---

*Except where combined shift and methanation are to be effected.

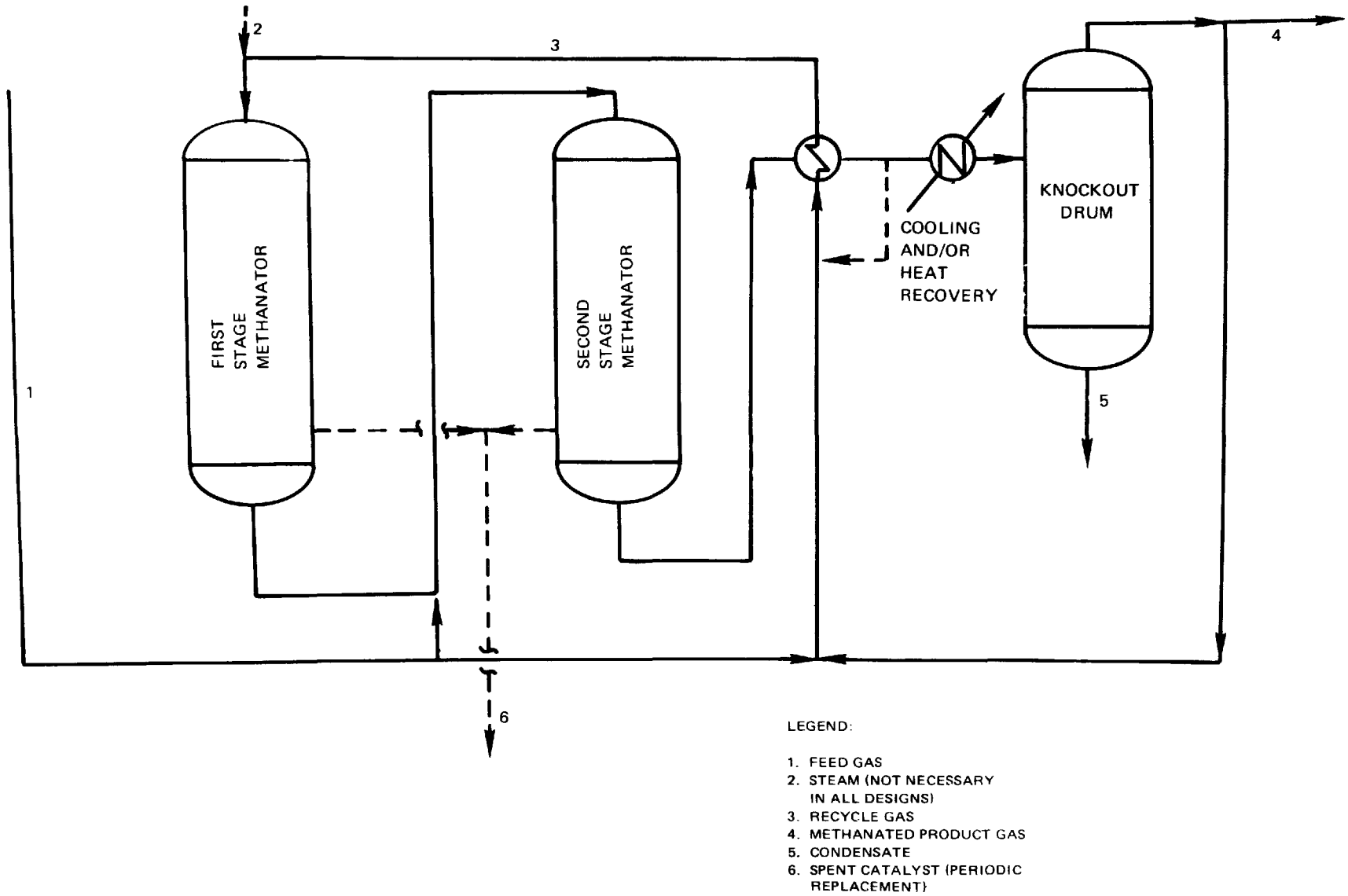

Figure C-2. Schematic Flow Diagram for Typical Fixed-Bed Methanation[9,15]

TABLE C-3. FIXED-BED METHANATION - TYPICAL EQUIPMENT SIZES (HYGAS VERSION)

General Scale	Pilot Plant	One-third of Demonstration Plant Site	One-fourth of Demonstration Plant Site
Status	Built & Running	Conceptual	Conceptual
Reference	(4)	(5)	(12)
Volume of Product Gas, cubic meters per day	9.7×10^3	2.26×10^6	1.94×10^6
Reactor Dimensions, dia./ht.(meters)			
Number 1	0.61/2.95	3.35/1.22	3.96
Number 2	0.61/4.47	3.35/2.44	4.11
Number 3	None	3.35/4.88	4.27
Number 4	None	3.35/9.14	None
Recycle Compressor displacement, cu m/sec	0.026	1.50	---
kilowatts (steam drive)	30	(1200)	(785)
Waste Heat Steam Generator(s) kg/hr	None	73400	198200
Feed-Product Exchanger sq m	---	44.2	685
Total Surface, All Other Coolers, sq m	---	---	280
Condensate Flash Drum dia./length (meters)	---	2.13/4.57	1.83/3.96

The non-reagent portion of the feed gas should be almost entirely methane. Nitrogen or other inert diluent should be as low as feasible.

Temperature[15]: Ideal operating temperature is about 670°K (750°F). Feed temperatures of 600°K (600°F) are desirable to allow for generated heat to be used in making superheated steam. Nickel carbide (and carbonyl) can form from catalyst and carbon monoxide at temperatures below about 623°K (665°F).

Carbon monoxide can disproportionate to carbon dioxide and elemental carbon at low temperatures, leading to catalyst deactivation.

Pressure[13,15]: Since the methanation reactions are favored at high pressures, the pressure level of fixed-bed methanation is preferred as high as possible. Most coal gasification process designs have contemplated pressures in the range of 3.2 MPa (480 psia) to 8.3 MPa (1200 psia).

2.4 Operating Parameters

Temperature[14]: Typical feed temperatures are about 600°K (600°F). Exit temperatures are kept below about 760°K (900°F) to inhibit carbon formation on catalyst.

Pressure: 3.2 MPa to 8.3 MPa (480 to 1220 psia).

Space Velocity: Fixed-bed HYGAS pilot plant methanator[14] - 320 - 4000 hrs^{-1}; tube wall CO_2 Acceptor pilot plant methanator[16] - 38,100 - 39,500 hrs^{-1}.

2.5 Process Efficiency and Reliability - Hundreds of fixed-bed units have operated commercially, mainly for applications such as purification of ammonia synthesis gas. In such applications essentially complete methanation of carbon monoxide can be obtained.

Commercial SNG production via methanation has yet to have any widespread application. Available data indicate that fixed-bed reactors can produce gas containing greater than 90%

methane and less than 1000 ppmv carbon monoxide. Methanation of CO_2 does not occur until essentially all CO has reacted[14].

The reliability of the process is influenced by a number of factors. Sulfur, chlorine and metals can poison methanation catalysts. Careful control of bed temperatures is necessary to inhibit carbon formation, catalyst deactivation and nickel carbonyl formation.

2.6 Raw Material Requirements[14,15] - Catalyst life is normally scheduled for 2 years. Longer service periods, up to 10 years, have been achieved by careful operation. Catalyst properties and composition vary with the source and are usually proprietary (nickel content varies from 25 to 70 percent).

2.7 Utilities

Steam: There is a net surplus of high-pressure steam generated by the exotherm of the methanation reaction. The amount of steam available for export varies widely with process design and equipment selection. Steam may also be used as a diluent to feed gas. Such steam is partially converted to hydrogen via the water gas shift reaction, with subsequent methanation.

Cooling Water: No data available; quantities depend on specific design.

Electric Power: The recycle gas compressor is usually driven by a steam turbine. There are no other significant power consumers in this process, except possibly the fans of finned-tube air coolers. No actual operating data are available.

2.8 Distribution/Formation of Trace Constituents During Methanation - Unsaturated hydrocarbons and alcohols are completely hydrogenated over nickel catalyst[14]. Nitric oxides and ammonia are completely converted to elemental nitrogen, while HCN is only partially destroyed. Sulfur compounds are converted to H_2S and subsequently react with and deactivate the catalyst. Chlorine in feed also deactivates nickel catalysts.

Nickel carbonyl ($Ni(CO)_4$) can form in methanators by reaction of CO with the catalyst[17]. This reaction is favored at low temperatures and is not especially important in the steady state operating range of 600°K-760°K (620°F-900°F). Transient operations, however, can lead to carbonyl formation.

Iron carbonyl can form by reaction of CO at low temperatures with iron in carbon steel piping. If carried into the methanation reactor, iron and carbon can be deposited onto the catalyst, causing deactivation. Stainless steel piping upstream of methanators can eliminate this problem[15].

3.0 Process Advantages

3.1 Fixed-Bed Methanation

- Fixed-bed methanation can produce pipeline-quality high-Btu gas.
- Fixed-bed methanation is a commercially proven process.
- There is very little pressure drop from feed gas to product gas through a properly designed fixed-bed methanation system.
- There is little shift conversion in fixed-bed methanation; carbon dioxide is not generated in large amounts. On the contrary, any carbon dioxide in the feed gas will tend to be destroyed by hydrogenation to methane if sufficient hydrogen is present in the feed.

3.2 Fixed-Bed Methanation/Shift

- Elimination of a recycle system and large mass and heat flow rates
- Elimination of a separate shift conversion section
- Operation at conditions removed from regions of carbon formation
- Production of more steam at higher pressures with less surface areas
- Reduction in catalyst sensitivity to sulfur
- CO_2 removal from a reduced volume of gas

4.0 Process Limitations

- Essentially no sulfur can be tolerated in the feed.
- Cold startup can be complex and requires skilled operators. Hazards such as $Ni(CO)_4$ production require special precautions.
- The reagent gases are thermodynamically unstable outside certain boundary conditions and will decompose to carbon. Methane cracks when too hoc or with insufficient residual hydrogen. Carbon monoxide disproportionates when too cold. The methanation reactors must be operated within well defined limits of temperature and reagents' partial pressures. Fortunately, these limits are known precisely.
- Methanation/shift has not been demonstrated on a commercial scale.

5.0 Process Economics

The 1974 capital cost estimate for the methanation section of the steam-oxygen version of a HYGAS demonstration plant was $29,000,000[12]. Demonstration plant size is 7.08 million cubic meters per day. The whole demonstration plant, on the same basis, was estimated at $681,700,000. Therefore methanation constitutes 4.25% of coal gasification capital cost. (Presumably this figure includes a small amount for the antecendent zinc oxide guard chamber.)

Operating costs for methanation are not known. Generally, the value of steam produced is expected to exceed the value of other utilities consumed.

6.0 Input Streams

6.1 Feed Gas (Stream 1) (see Tables C-4, C-5, C-6, C-7) - The data are for gases produced by the HYGAS process, the CO_2-Acceptor process, a test gas containing essentially no methane, and a simulated Lurgi product gas, respectively. The former two gases have been treated for CO_2 removal and have a ratio of H_2 to CO of about 4. The third contains about 25 percent CO_2, and has a ratio of H_2 to CO of about 1:4. The fourth gas has been treated for CO_2 removal but has not been shifted prior to methanation.

TABLE C-4. TYPICAL PERFORMANCE DATA FOR THE HYGAS PILOT PLANT RECYCLE METHANATION REACTOR*(7)

Methanation	1st Stage	2nd Stage
Recycle Ratio	3.3	1.0
Space Velocity (hr^{-1})	4200	2800
Catalyst Used	Harshaw pelleted nickel on Kieselguhr	
Stream	Feed Gas	Product Gas
Flow Rate		
Nm^3/hr (scf/hr)	1660 (28100)	1020 (17260)
Composition (dry)	vol %	vol %
H_2	51.6	15.5
CO	12.7	0
CH_4	23.6	67.4
C_2H_6	1.4	0
CO_2	0	0
N_2	10.4	17.1
	ppmv	ppmv
H_2S	.003	--
COS	.045	--
RSH	.002	--
Condensate produced kg/hr (lbs/hr)	81 (177)	

*Run #37, 7/1/75 (1300 hrs) to 7/2/75 (0600 hrs).

TABLE C-5. PERFORMANCE DATA FOR THE CO_2-ACCEPTOR PILOT PLANT PACKED TUBE METHANATION REACTOR*(16)

Recycle Ratio	1.24	--
Space Velocity (hr^{-1})	38,100	39,500
Catalyst Used	N/A	N/A
Stream	Feed Gas	Product Gas
Flow Rate		
Nm^3/hr (scf/hr)	1415 (23900)	549 (9300)
Temperature, °K (°F)	373 (206)	723 (840)
Composition (dry)		
H_2	62.8	2.5
CO	15.5	0
CH_4	13.8	88.6
CO_2	4.2	0
N_2	3.7	8.9
	100	100
Moisture in Gas, kg/hr (lbs/hr)	53 (177)	162 (356)

*Downstream coolant used to remove reactor heat.

Table C-6. PILOT PLANT DATA FOR METHANATION/SHIFT OF SYNTHESIS GAS USING STEAM*(1)

Gas Composition (dry)	Feed Gas	Product Gas
H_2	42.91	5.83
CO	31.14	0.34
CH_4	0.08	29.13
CO_2	24.66	62.70
N_2	1.21	2.00
	100	100
Moisture (as percent of dry gas volume)	67.3	118

*3 adiabatic stages employed; steam used to dilute feed gas, high nickel (60% NiO) co-precipitated formula catalyst.

Table C-7. PERFORMANCE OF THE RM PROCESS FOR COMBINED SHIFT/METHANATION*(19)

	Feed Gas	Methanation Reactor Product			
Temperature, °K (°F)					
Inlet	--	755 (900)	755 (900)	588 (600)	588 (600)
Outlet	--	1060 (1469)	1000 (1342)	800 (128)	750 (890)
Composition (mole %)					
H_2	58.9	48.7	35.1	18.1	6.8
CO	24.3	13.6	7.5	1.8	0.2
CO_2	0.1	6.4	7.5	7.6	5.9
CH_4	14.7	23.6	28.5	34.2	37.4
N_2+Ar	1.6	--	--	--	--
Moisture (as percent of dry gas volume at inlet)	--	24	24	33	51

*Four fixed-bed reactors in series operating at different temperatures.

6.2 Steam (Stream 2) - see Tables C-6 and C-7 for quantities used in small scale tests.

7.0 Process/Discharge Streams

7.1 Recycle Feed (Stream 3) - See Tables C-4 and C-5 for recycle ratios which have been employed. Composition of recycle is same as product gas (Stream 4).

7.2 Methanated Product Gas (Stream 4)(see Tables C-4, C-5, C-6, C-7) - Note that CH_4 to H_2 ratios in product gases in Tables C-4 and C-6 are similar. More complete methanation is represented by the data in Table C-5.

7.3 Condensate (Stream 5) - Quantities produced (or potential) are indicated in Tables C-4, C-5, C-6 and C-7. Condensate will contain dissolved gases which can be released upon depressurization, although quantities are expected to be small. Only traces of hydrocarbons (other than methane), sulfur and nitrogen compounds, and suspended material (e.g., catalyst fines) are expected. No actual operating data are available.

7.4 Spent Catalyst (Stream 6) - See Table C-8 for properties of spent catalyst used in the HYGAS pilot plant methanator. Spent catalyst may be disposed of (1) directly as landfill, (2) returned to catalyst vendor for reclamation of nickel value, (3) used as sulfur guard bed adsorbent. In the latter application nickel is almost as active as zinc for trace sulfur removal, and a spent methanation catalyst still has a considerable capacity for sulfur.

8.0 Data Gaps and Limitations

Data gaps and limitations relate primarily to the properties and composition of spent methanation catalyst(s) and process condensate(s). The compositions of product gases during transient or unsteady state operation are also not well documented (e.g., presence of $NI(CO)_4$).

9.0 Related Programs

No programs are known to be underway or planned for specifically obtaining environmental data on methanation operations. On-going pilot scale

TABLE C-8. SPENT HARSHAW Ni-0104-T-1/4 CATALYST ANALYSIS (USED IN HYGAS PILOT PLANT METHANATOR)[18]

	First Stage		Second Stage		Typical Fresh Catalyst
	Bottom	Top	Bottom	Top	
Sulfur, %	3.7	0.95	0.13	0.16	0.15
Carbon, %	3.4	4.7	5.3	4.5	3.4
Nickel, %	52	61	60	61	60
Surface Area, m^2/g	36	69	75	79	150
Total Pore Volume, cc/g	0.16	0.27	0.27	0.27	0.25
Ni Crystallite Size, A	491	97	89	99	65

methanation is being conducted at DOE-sponsored pilot coal gasification plants (HYGAS, Synthane, BIGAS). Data generated as part of this work could fill some of the data gaps.

REFERENCES

1. Woodward, Colin, Catalyst Available for High Temperature Methanation, Hydrocarbon Processing, January 1977, p. 136.

2. Landers, James E., Review of Methanation Demonstration at Westfield, Scotland, Proceedings of Sixth Synthetic Pipeline Gas Symposium, A.G.A., et al, Chicago, Illinois, 1974, pp.297-304.

3. Hebden, D., and Brooks, C. T., Westfield--The Development of Processes for the Production of SNG from Coal, Communication 988 at the 113th Annual General Meeting of the Institution of Gas Engineers, Edinburgh, 1976.

4. Institute of Gas Technology, HYGAS: 1964 to 1973 Pipeline Gas from Coal-Hydrogenation (IGT Hydrogasification Process) Part III: Pilot Plant Development, ERDA Number FE-381-T9-P2, Chicago, Illinois, 1975.

5. Institute of Gas Technology, HYGAS: 1964 to 1973 Pipeline Gas from Coal-Hydrogenation (IGT Hydrogasification Process) Part VIII: Commercial Plant Design, ERDA Number FE-381-T9-P4, Chicago, Illinois, 1975.

6. Lee, B. A., Status of HYGAS Process--Operating Results, Proceedings of Fifth Synthetic Pipeline Gas Symposium, A.G.A. et al, Chicago, Illinois, 1973, pp.5-17.

7. Lee, B. A., Status of HYGAS Program, Proceedings of Seventh Synthetic Pipeline Gas Symposium, A.G.A. et al, Chicago, Illinois, 1974, pp.313-355.

8. Lee, B. A., Current Development of the HYGAS Program, Proceedings of Eighth Synthetic Pipeline Gas Symposium, A.G.A. et al, Chicago, Illinois, 1976, pp.13-32.

9. Institute of Gas Technology, Pipeline Gas from Coal-Hydrogenation (IGT Hydrogasification Process) Project 8907 Final Report, August 1972-June 1976, ERDA Number FE-1221-145, Chicago, Illinois, 1976.

10. Institute of Gas Technology, Pipeline Gas from Coal-Hydrogenation (IGT Hydrogasification Process) Project 9000 Quarterly Report No. 1, July-September 1976. ERDA Number FE-2434-4, Chicago, Illinois, 1976.

11. Institute of Gas Technology, Pipeline Gas from Coal-Hydrogenation (IGT Hydrogasification Process) Project 9000 Quarterly Report No. 2, October-December 1976. ERDA Number FE-2434-8, Chicago, Illinois, 1976.

12. Detman, R., Factored Estimates for Western Coal Commercial Concepts, ERDA Number FE-2240-5, C. F. Braun & Co., Alhambra, California, 1976.

13. Seglin, L., Methanation of Synthesis Gas, American Chemical Society, Advances in Chemistry Series 146, Washington, D. C., 1976.

14. Cameron Engineers, Synthetic Fuels Quarterly, Vol. 13, No. 1, March 1976, pp.4-7 to 4-13.

15. Mueller, F. W., Methanation of Coal Gas for SNG, Hydrocarbon Processing, April 1974.

16. McCoy, D. C., The CO_2 Acceptor Process Pilot Plant 1976, Eighth Synthetic Pipeline Gas Symposium, Chicago, Illinois, October 18-20, 1976, p. 33.

17. Allen, D. W., and Yen, W. H., Methanator Design and Operation, Chemical Engineering Progress, Vol. 69, No. 1, January 1973.

18. Leppin, D., Operating Experience with the IGT Cold-Gas Recycle Methanation Process in the HYGAS Pilot Plant, Ninth Synthetic Pipeline Gas Symposium, Chicago, Illinois, October 31-November 2, 1977.

19. Chow, T. K. et al, The RM Process, A Methanation System, Ninth Synthetic Pipeline Gas Symposium, Chicago, Illinois, October 31-November 2, 1977.

FLUIDIZED-BED METHANATION PROCESS

1.0 General Information

1.1 Operating Principle - Methanation of carbon oxides and hydrogen in a bed of nickel-based catalyst particles fluidized by feed gas.

1.2 Development Status[1,2] - Fluidized-bed methanation has been tested at the PEDU level under sponsorship of DOE and Bituminous Coal Research (BCR). Early tests were aimed at determining catalyst suitability and attrition and heat transfer characteristics. During 1976 and 1977, PEDU methanation operations at the BIGAS Homer City, Pa, pilot plant were conducted to evaluate the most promising catalyst under a wide variety of conditions. As of November 1977, over 30 days of operating experience with the catalyst have been logged. This experience is expected to be useful in further operation and scale-up of the pilot-plant methanator.

Thyssengas GmbH of Duisburg, West Germany has recently tested a pilot fluidized-bed reactor for combined shift and methanation[5]. Initial results indicate that 75 to 100 percent of equilibrium methane and carbon dioxide formation can be obtained in the reactor with acceptable catalyst attrition losses.

1.3 Licensor/Developer - Bituminous Coal Research, Inc
350 Hochberg Road
Monroeville, PA 15146

1.4 Commercial Applications - Thyssengas GmbH
Duisburg, West Germany

2.0 Process Information

2.1 Flow Diagram - Figure C-3 is a diagram of the pilot plant methanator system of the BIGAS process in Monroeville, Pennsylvania.

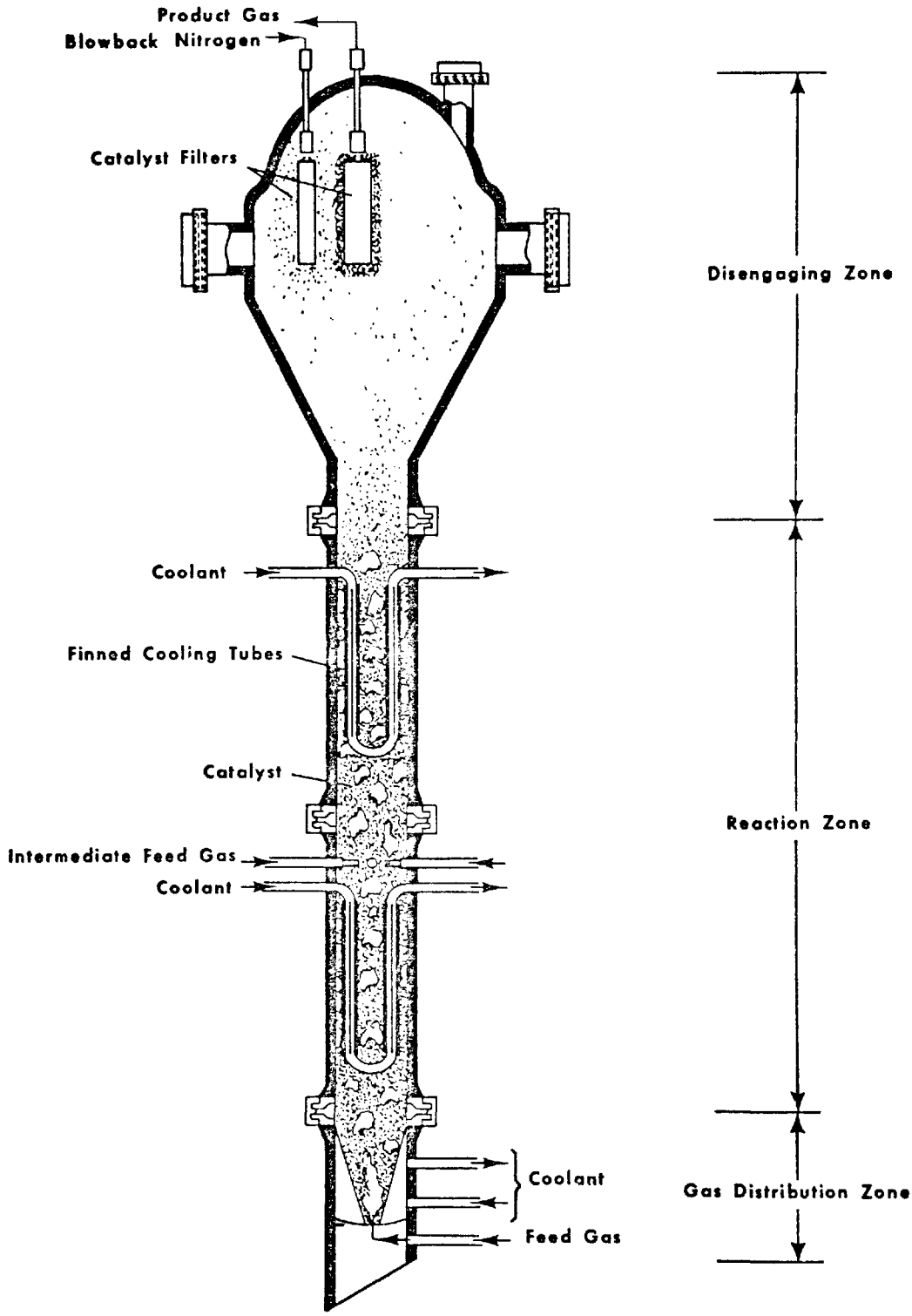

Figure C-3. Pilot Plant Fluidized-Bed Methanator[6]

2.2 Equipment - Figure C-3 shows the 0.1524 meter pilot methanator. Note the elaborate internal cooling coils. Equipment outside the reactor is conventional.

2.3 Feed Stream Requirements

Composition[3]: The ratio of hydrogen to carbon oxides should be slightly greater than stoichiometric. The stoichiometry requires three moles hydrogen per mole carbon monoxide and four moles hydrogen per mole carbon dioxide. Residual excess hydrogen at completion of the reaction should be in the range of 2 to 10 percent. Moisture can be tolerated up to the saturation level at 328°K (130°F).

The feed gas must be quite free of sulfur in all forms. Catalysts differ in their tolerance for sulfur, but a reasonable specification might be 0.1 ppm measured as H_2S.

The non-reagent portion of the feed gas should be almost entirely methane. Nitrogen or other inert diluent should be as low as feasible.

Temperature[3]: Ideal operating temperature is about 670°K (750°). Feed temperatures of 600°K (620°F) are desirable to allow for generated heat to be used in making superheated steam. Nickel carbide (and carbonyl) can form from catalyst and carbon monoxide at temperatures below about 623°K (655°F).

Carbon monoxide can disproportionate to carbon dioxide and elemental carbon at low temperatures, leading to catalyst deactivation.

Pressure[3]: Since the methanation reactions are favored at high pressures, the pressure level of fixed-bed methanation is preferred as high as possible. Most coal gasification process designs have contemplated pressures in the range of 3.2 MPa (480 psia) to 8.3 MPa (1200 psia).

2.4 Operating Parameters[1,2]

Temperature: Typical feed temperatures are about 600°K (620°F). Exit temperatures are kept below about 760°K (900°F) to inhibit carbon formation on catalyst via methane decomposition.

Pressure: 3.2 MPa to 8.3 MPa (680 to 1200 psia)

Space Velocity: PEDU runs have been in the range of 1500 to 3000 reciprocal hours. However, it may be necessary to go to much longer residence times or to multiple-staged beds to achieve pipeline quality product gas.

2.5 Process Efficiency and Reliability - Fluidized-bed methanation is still in an early stage of development. Little information is available regarding efficiency and reliability.

2.6 Raw Material Requirements[1] - The only raw materials inherently required for methanation are the feed gas and the catalyst make-up. Harshaw catalyst (nickel, copper, molybdenum on alumina support) has been used at the Bigas pilot plant. Catalyst losses in the runs conducted so far appear to be in the normal range for fluidized-bed operations.

2.7 Utilities - It is too early in the development of fluidized-bed methanation to predict utilities requirements. There should be a substantial credit for surplus high-pressure steam generated in waste heat boilers.

3.0 Process Advantages[1]

- No recycle of product gas is required for a fluidized-bed methanator.
- Heat transfer from a fluid bed is excellent; there is little danger of an uncontrolled exotherm.
- Cold startup should present minimal problems. The internal cooling coils in the fluidized-bed methanator can be used as a startup heater.

4.0 Process Limitations[1,2]

- In common with alternate modes of methanation, the fluidized bed suffers from catalyst sensitivity to sulfur and from the potential risk of reagent instability and decomposition to carbon.

- Fluidized bed reactors suffer from back-mixing and short-circuiting[9]. In the case of methanation reactors, back-mixing causes a relatively high concentration of water vapor to be present ab initio at the injection point of the CO-rich feed gas. This causes the water gas shift reaction to take place. Indeed BCR's PEDU reactor turned out to be a much better shift reactor than a methanator.

- Having the shift reaction occur in a methanator need not be a serious liability if the resulting CO_2 can later be methanated. However, it is a well-known phenomenon that CO_2 hydrogenation is inhibited by the presence of CO (at levels greater than about 200 ppmv)[3].

- The short-circuiting characteristic of fluidized beds makes it virtually impossible to get the carbon monoxide concentration of dry product gas down to the pipeline specification (0.1 percent). At least it cannot be done in a single stage; perhaps multiple stages of reaction could overcome this difficulty.

5.0 Process Economics

No dependable cost figures are available for fluidized-bed methanation because no credible large-scale plant design has yet been published.

6.0 Input Streams

- Feed Gas - See Table C-9.

7.0 Discharge Streams

- Product Gas - See Table C-9.

- Spent Catalyst - No composition data available. Attrition of catalyst appears to be a minor problem after the first few hours of methanation operation[1].

8.0 Data Gaps and Limitations

Fluidized-bed methanation needs considerable development. Attention should be focused on overcoming the inherent disadvantages of fluidization operations, i.e., back-mixing and short-circuiting.

9.0 Related Programs

No programs are currently underway to assess environmental problems associated with fluidized-bed methanation.

TABLE C-9. TYPICAL PERFORMANCE DATA FOR THE FLUIDIZED-BED METHANATION PLANT OPERATION AT THE BIGAS FACILITY, HOMER CITY, PA*(4)

	Feed Gas	Product Gas
Temperature, °K (°F)	673° (752°)	700° (800°)
Flow Rate, kg-moles/hr	2.434	1.416
Composition (vol %)		
H_2	59.4	30.8
CO	19.4	1.0
CO_2	.082	7.2
CH_4	20.2	59.8
C_2H_6	0.4	1.2
Water Condensed, kg-moles/hr	--	0.254

*Period 17, Run 22 (Oct. 7, 1976).

REFERENCES

1. Streeter, R. C., Recent Developments in Fluidized Bed Methanation Research, Ninth Synthetic Pipeline Gas Symposium, October 3-November 2, 1977.

2. Streeter, R. C., D. A. Anderson, et al, Status of the BIGAS Program, Part II - Evaluation of Fluidized-Bed Methanation Catalysts, Proceedings of Eighth Synthetic Pipeline Gas Symposium, A.G.A. et al, Chicago, Illinois, 1976, pp. 95-127.

3. Seglin, L., Methanation of Synthesis Gas, American Chemical Society, Advances in Chemistry Series 146, Washington, D. C., 1975.

4. Bituminous Coal Research, Inc, Gas Generator Research and Development: Bi-Gas Process, Quarterly Report October-December 1976, ERDA Number FE-1207-25, Monroeville, Pennsylvania, 1977.

5. Flockenhaus, C., One Stage Shift-Conversion and Partial Methanation Process for Upgrading Synthesis Gas to Pipeline Quality, Ninth Synthetic Pipeline Gas Symposium, Chicago, Illinois, October 31-November 2, 1977.

LIQUID PHASE METHANATION/SHIFT (LPM/S) PROCESS

1.0 General Information

1.1 Operating Principles - Methanation is accomplished in a fluidized bed with feed gas bubbling up through a non-volatile fluid (aliphatic or naphthenic mineral oil). The reaction is promoted by nickel catalyst suspended in the oil. Filtered circulating oil carries the reaction heat to an external cooler, generating high-pressure steam.

1.2 Development Status[1,2,3] - Under contract to DOE, Chem Systems Inc. has operated a bench scale and a PDU unit. A pilot plant was built by Davy Powergas to operate at 1000 psi, handling 118×10^3 Nm^3/day (2×10^6 scfd) feed gas. This plant was skid-mounted for tests as an operating high-Btu gasification pilot plant (HYGAS) starting in October 1976. Tests with two different feed gas streams and two catalysts have been performed to date.

1.3 Developer - Chem Systems Inc.
New York, N. Y. (201-575-8820)
(ERDA [DOE] Fossil Energy Contract 2036)

1.4 Commercial Applications - None.

2.0 Process Information

2.1 Flow Diagram (see Figure C-4) - Feed gas bubbles through a suspension of nickel methanation catalyst in a high-temperature boiling oil. The oil absorbs the heat of the methanation reaction and is cooled by heat exchange to regenerate steam. Catalyst fines are filtered from the oil before recycle to the main reactor. Moisture and volatile oil are condensed from the methanation gas in a separator prior to final methanation in a small fixed-bed adiabatic reactor. Condensate is either recycled or discharged.

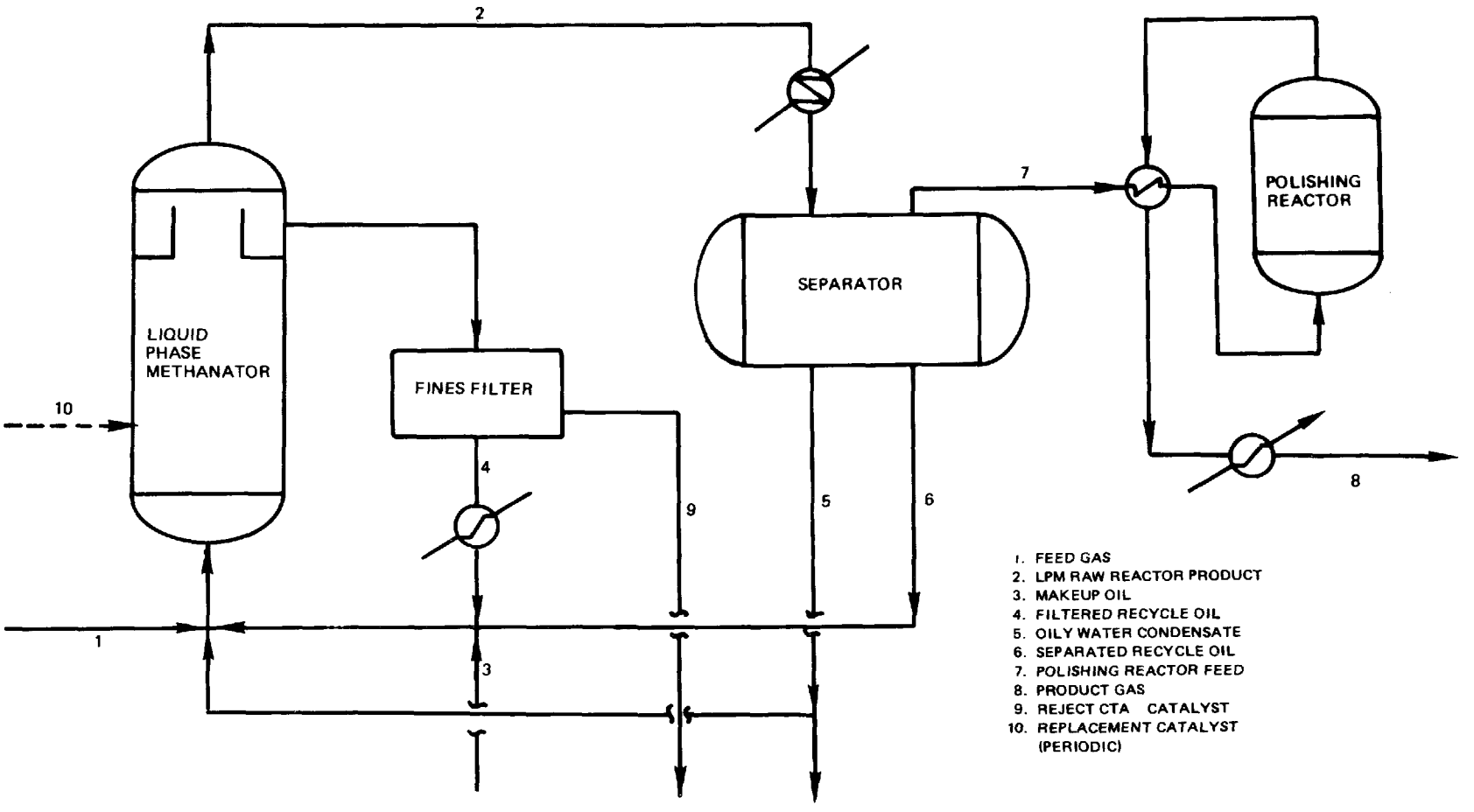

Figure C-4. Flow Diagram for Liquid Phase Methanation Pilot Plant[1]

2.2 Equipment - All vessels are designed for high pressure operation (main reactor, separator, filter system, polishing reactor, heat exchangers). No data are available regarding materials of construction.

2.3 Feed Stream Characteristics[1]

- Low sulfur content required (0.5 ppm H_2S or less) to inhibit nickel catalyst deactivation. A ZnO guard bed is used upstream.
- Pressure: 2 MPa (300 psia) or more pipeline pressure is suitable.
- Temperature: 573°K-653°K (572°F-716°F)
- H_2/CO ratio between 1:1 and 3:1
- Some H_2O addition if H_2/CO ratio is less than 3, to promote water-gas shift reaction.

2.4 Operating Parameters[1,2]

- Pressure: 2 MPa - 6.8 MPa (300psia - 1000 psia)
- Space velocity: 500 to 10,000 hr^{-1}
- Catalyst size: .08 - .42 cm (.03 - .19 inches), previously hydrogen-activated in dry state
- Temperature: 573°K-653°K (572°F-716°F); upper temperature limited by thermal stability of liquid. Paraffin or aromatic oils have been tested. Paraffins and/or naphthenics of low pour point are preferred and vapor pressure 68 Pa (10 psia) at 588°K (600°F).

2.5 Process Efficiency[1] - CO conversion in the main-reactor effluent is about 96 percent, depending on H_2/CO ratio in effluent. A fixed-bed adiabatic polishing reactor follows the main reactor, similar to commercial naphtha-reforming SNG plants. Space velocity in the polishing reactor is 9500 hr^{-1}, which is a high rate for fixed-bed techniques. No detectable CO exists in the final product gas.

2.6 Raw Material[2]

- Suspension catalyst: Two catalysts have been pilot plant tested: Calsicat NI-230-S catalyst spheres (requires hydrogen activation) and INCO catalyst #087H (no activation required).

- Oil: Small rate of replacement; depends on operating temperature and volatility of the oil. Pilot plant has used FREEZENE-100 oil.

- Polishing catalyst: Laporte-Davison CRG-A catalyst pellets

2.7 Utilities

- Steam: Small internal requirement, process generates excess steam.

- Electricity: ?

- Cooling water: ?

3.0 Process Advantages

- No recycle compressor necessary.

- Potential for increased by-product steam production.

- Enhanced catalyst life.

- Applicable to wide range of H_2/CO in feed.

- Capital cost saving (shift reaction combined).

- Upstream desulfurization systems need not remove CO_2. Resulting product stream can be high in H_2S, aiding sulfur plant operation.

4.0 Process Limitations

- Catalyst is sulfur-intolerant; feed-gas pretreatment required.

- 300 psi minimum pressure.

- Maximum 650°K (705°F) temperature limitation to avoid degradation of liquid.

- Operation of a LPM/S system with heavier hydrocarbons in feed gas has not been tried.

- Process not demonstrated on a commercial scale. Test results to date indicate that gas distribution in the reactor is poor, leading to poor catalyst efficiency and catalyst losses from the reactor.

5.0 Process Economics[1]

Chem Systems has estimated cost savings for comparable systems of LPM/S over conventional shifting plus Lurgi methanation. About 9 cents/10^6 Btu are calculated to be saved (product-gas basis, H_2/CO initially 2.0; utility financing method). Capital investment and power consumption savings contributed as did increased steam output to the overall difference. Overall plant efficiency rises 3 percent with the LMP/S process and about $30 million is saved in constructing a 7 x 10^6 Nm^3/day (250 x 10^6 SCFD) plant.

6.0 Input Streams

6.1 Feed Gas (Stream 1) - Gases with H_2/CO ratios of 1:3 have been methanated at the bench or PDU scale. Pilot plant methanator feeds have had H_2/CO ratios of 4:6 and about 3. No other data available.

6.2 Makeup Oil Containing Catalyst (Stream 3) - Aliphatic or naphthenic oils are employed (C_{15}-C_{21}). No actual operating data available.

6.3 Replacement Catalyst (Stream 10) - See Section 2.6.

7.0 Intermediate Streams

7.1 LMP Raw Reactor Product (Stream 2) - No data available.

7.2 Filtered Recycle Oil (Stream 4) - No data available.

7.3 Oily Water Condensate (Stream 5) - No data available.

7.4 Separated Recycle Oil (Stream 6) - No data available.

7.5 Polishing Reactor Feed (Stream 7) - PDU scale feed contains 2-3 percent CO, 6-14 percent H_2, 22+ percent CO_2, 55+ percent CH_4, and up to 15 percent moisture[1]. No data available from pilot operations.

8.0 Discharge Streams

8.1 Product Gas (Stream 8) - No data available.

8.2 Reject Catalyst (Stream 9) - No data available.

9.0 Data Gaps and Limitations

Available bench scale, PEDU, and pilot plant operating data very limited. No data are available about the properties and composition of oily condensate or spent catalyst.

10.0 Related Programs

Ongoing process and waste stream monitoring programs at the HYGAS pilot plant are expected to generate data about the LPM/S system during 1978.

REFERENCES

1. Frank, M. E., et al, LPM/S PDU Results and Pilot Plant Status. In Proceedings of the Eighth Pipeline Gas Symposium, American Gas Association, Chicago, Illinois, October 1976, pp.161-182.

2. Frank, M. E., and Mednick, R. L., Liquid Phase Methanation Pilot Plant Results, Ninth Synthetic Pipeline Gas Symposium, Chicago, Illinois, October 30-November 2, 1977.

3. Best Way to Methanate Gas from Coal Sought, Chemical and Engineering News, Vol. 56, No. 3, January 16, 1978, p. 30.

TECHNICAL REPORT DATA
(Please read Instructions on the reverse before completing)

1. REPORT NO. EPA-600/7-78-186b	2.	3. RECIPIENT'S ACCESSION NO.
4. TITLE AND SUBTITLE Environmental Assessment Data Base for High-Btu Gasification Technology: Volume II. Appendices A, B, and C		5. REPORT DATE September 1978
		6. PERFORMING ORGANIZATION CODE
7. AUTHOR(S) M. Ghassemi, K. Crawford, and S. Quinlivan		8. PERFORMING ORGANIZATION REPORT NO.
9. PERFORMING ORGANIZATION NAME AND ADDRESS TRW Environmental Engineering Division, One Space Park, Redondo Beach, California 90278		10. PROGRAM ELEMENT NO. EHE623A
		11. CONTRACT/GRANT NO. 68-02-2635
12. SPONSORING AGENCY NAME AND ADDRESS EPA, Office of Research and Development, Industrial Environmental Research Laboratory, Research Triangle Park, NC 27711		13. TYPE OF REPORT AND PERIOD COVERED Final; 6/77 - 8/78
		14. SPONSORING AGENCY CODE EPA/600/13

15. SUPPLEMENTARY NOTES IERL-RTP project officer is William J. Rhodes, Mail Drop 61, 919/541-2851.

16. ABSTRACT The report is part of a comprehensive EPA program for the environmental assessment (EA) of high-Btu gasification technology. It summarizes and analyzes the existing data base for the EA of technology and identifies limitations of available data. Results of the data base analysis indicate that there currently are insufficient data for comprehensive EA. The data are limited since: (1) there are no integrated plants, (2) some of the pilot plant data are not applicable to commercial operations, (3) available pilot plant data are generally not very comprehensive in that not all streams and constitutents/parameters of environmental interest are addressed, (4) there is a lack of experience with control processes/equipment in high-Btu gasification service, and (5) toxicological and ecological implications of constituents in high-Btu gasification waste streams are not established. A number of programs are currently under way or planned which should generate some of the needed data. The report consists of three volumes: Volume I summarizes and analyzes the data base; Volume II contains data sheets on gasification, gas purification, and gas upgrading; and Volume III contains data sheets on air and water pollution control and on solid waste management.

17. KEY WORDS AND DOCUMENT ANALYSIS

a. DESCRIPTORS	b. IDENTIFIERS/OPEN ENDED TERMS	c. COSATI Field/Group
Pollution Coal Coal Gasification Assessments	Pollution Control Stationary Sources Environmental Assessment High-Btu Gasification	13B 21D 13H 14B

18. DISTRIBUTION STATEMENT Unlimited	19. SECURITY CLASS (This Report) Unclassified	21. NO. OF PAGES 415
	20. SECURITY CLASS (This page) Unclassified	22. PRICE

EPA Form 2220-1 (9-73)